Doc Code: PET.GREEN
Document Description: Petition for Green Tech Pilot

PTO/SB/420 (11-10)
Approved for use through 01/31/2011. OMB 0651-0062
U.S. Patent and Trademark Office; U. S. DEPARTMENT OF COMMERCE
Under the Paperwork Reduction Act of 1995, no persons are required to respond to a collection of information unless it displays a valid OMB control number.

PETITION TO MAKE SPECIAL UNDER THE GREEN TECHNOLOGY PILOT PROGRAM

Attorney Docket Number: 83163925	Application Number (if known): 12862207	Filing date: 2010-08-24
First Named Inventor: John Moffat		
Title: COOLING SYSTEMS		

APPLICANT HEREBY REQUESTS TO PARTICIPATE IN THE GREEN TECHNOLOGY PILOT PROGRAM FOR THE ABOVE-IDENTIFIED APPLICATION. See Instruction Sheet on page 2.

This petition must be timely filed electronically using the USPTO electronic filing system, EFS-Web.

1. By filing this petition:

   Applicant is requesting early publication: Applicant hereby requests early publication under 37 CFR 1.219 and the publication fee set forth in 37 CFR 1.18(d) accompanies this request.

2. By filing this petition: applicant is agreeing to make an election without traverse in a telephonic interview and elect an invention that meets the eligibility requirements for the Green Technology Pilot Program, if the Office determines that the claims are not obviously directed to a single invention. See Instruction Sheet.

3. This request is accompanied by statements of special status for the eligibility requirement.

4. The application contains no more than three (3) independent claims and twenty (20) total claims.

5. The application does not contain any multiple dependent claims.

6. Other attachments: _____

Signature /David S. Bir/	Date 03-07-2011
Name (Print/Typed) David S. Bir	Registration Number 38383

Note: *Signatures of all the inventors or assignees of record of the entire interest or their representative(s) are required in accordance with 37 CFR 1.33 and 11.18. Please see 37 CFR 1.4(d) for the form of the signature. If necessary, submit multiple forms for more than one signature see below*.*

☐ *Total of ..... forms are submitted.

The information is required to obtain or retain a benefit by the public which is to file (and by the USPTO to process) an application. Confidentiality is governed by 35 U.S.C. 122 and 37 CFR 1.11 and 1.14. This collection is estimated to take 12 hours to complete, including gathering, preparing, and submitting the completed application form to the USPTO. Time will vary depending upon the individual case. Any comments on the amount of time you require to complete this form and/or suggestions for reducing this burden, should be sent to the Chief Information Officer, U.S. Patent and Trademark Office, U.S. Department of Commerce, P.O. Box 1450, Alexandria, VA 22313-1450. DO NOT SEND FEES OR COMPLETED FORMS TO THIS ADDRESS. **SEND TO: Commissioner for Patents, P.O. Box 1450, Alexandria, VA 22313-1450.**

If you need assistance in completing the form, call 1-800-PTO-9199 and select option 2.

Under the Paperwork Reduction Act of 1995, no persons are required to respond to a collection of information unless it displays a valid OMB control number.

Instruction Sheet for Petition to Make Special Under the Green Technology Pilot Program

(Not to be Submitted to the USPTO)

The following is a summary of the requirements (for more information see the notices (i) "Pilot Program for Green Technologies Including Greenhouse Gas Reduction," (ii) "Elimination of Classification Requirement in the Green Technology Pilot Program," and (iii) "Expansion and Extension of the Green Technology Pilot Program," available on the USPTO web site at http://www.uspto.gov/patents/init_events/green_tech.jsp):

1) The application must be a non-reissue, non-provisional utility application filed under 35 U.S.C. 111 (a), or an international application that has entered the national stage in compliance with 35 U.S.C. 371, irrespective of the filing date of the application. Reexamination proceedings are excluded from this pilot program.

2) The application must contain three or fewer independent claims and twenty or fewer total claims. The application must not contain any multiple dependent claims. For an application that contains more than three independent claims or twenty total claims, or multiple dependent claims, applicant must file a preliminary amendment in compliance with 37 CFR 1.121 to cancel the excess claims and/or the multiple dependent claims at the time the petition to make special is filed.

3) The claims must be directed to a single invention that materially enhances the quality of the environment, or that materially contributes to: (1) the discovery or development of renewable energy resources; (2) the more efficient utilization and conservation of energy resources; or (3) green house gas emission reduction (see the eligibility requirements of sections II and III of the notice (i) cited above). The petition must include a statement that, if the USPTO determines that the claims are directed to multiple inventions (e.g., in a restriction requirement), applicant will agree to make an election without traverse in a telephonic interview, and elect an invention that meets the eligibility requirements in section II or III of the notice (i) cited above.

4) The petition to make special must be timely filed electronically using the USPTO electronic filing system, EFS-Web, and selecting the document description of "Petition for Green Tech Pilot" on the EFS-Web screen. Applicant should use form PTO/SB/420, which is available as a Portable Document Format (PDF) fillable form in EFS-Web and on the USPTO Web site.

5) The petition to make special must be filed at least one day prior to the date that a first Office action (which may be an Office action containing only a restriction requirement) appears in the Patent Application Information Retrieval (PAIR) system. Applicant may check the status of the application using PAIR.

6) The petition to make special must be accompanied by a request for early publication in compliance with 37 CFR 1.219 and the publication fee set forth in 37 CFR 1.18(d).

Privacy Act Statement

The **Privacy Act of 1974 (P.L. 93-579)** requires that you be given certain information in connection with your submission of the attached form related to a patent application or patent. Accordingly, pursuant to the requirements of the Act, please be advised that: (1) the general authority for the collection of this information is 35 U.S.C. 2(b)(2); (2) furnishing of the information solicited is voluntary; and (3) the principal purpose for which the information is used by the U.S. Patent and Trademark Office is to process and/or examine your submission related to a patent application or patent. If you do not furnish the requested information, the U.S. Patent and Trademark Office may not be able to process and/or examine your submission, which may result in termination of proceedings or abandonment of the application or expiration of the patent.

The information provided by you in this form will be subject to the following routine uses:

1. The information on this form will be treated confidentially to the extent allowed under the Freedom of Information Act (5 U.S.C. 552) and the Privacy Act (5 U.S.C 552a). Records from this system of records may be disclosed to the Department of Justice to determine whether disclosure of these records is required by the Freedom of Information Act.
2. A record from this system of records may be disclosed, as a routine use, in the course of presenting evidence to a court, magistrate, or administrative tribunal, including disclosures to opposing counsel in the course of settlement negotiations.
3. A record in this system of records may be disclosed, as a routine use, to a Member of Congress submitting a request involving an individual, to whom the record pertains, when the individual has requested assistance from the Member with respect to the subject matter of the record.
4. A record in this system of records may be disclosed, as a routine use, to a contractor of the Agency having need for the information in order to perform a contract. Recipients of information shall be required to comply with the requirements of the Privacy Act of 1974, as amended, pursuant to 5 U.S.C. 552a(m).
5. A record related to an International Application filed under the Patent Cooperation Treaty in this system of records may be disclosed, as a routine use, to the International Bureau of the World Intellectual Property Organization, pursuant to the Patent Cooperation Treaty.
6. A record in this system of records may be disclosed, as a routine use, to another federal agency for purposes of National Security review (35 U.S.C. 181) and for review pursuant to the Atomic Energy Act (42 U.S.C. 218(c)).
7. A record from this system of records may be disclosed, as a routine use, to the Administrator, General Services, or his/her designee, during an inspection of records conducted by GSA as part of that agency's responsibility to recommend improvements in records management practices and programs, under authority of 44 U.S.C. 2904 and 2906. Such disclosure shall be made in accordance with the GSA regulations governing inspection of records for this purpose, and any other relevant (*i.e.*, GSA or Commerce) directive. Such disclosure shall not be used to make determinations about individuals.
8. A record from this system of records may be disclosed, as a routine use, to the public after either publication of the application pursuant to 35 U.S.C. 122(b) or issuance of a patent pursuant to 35 U.S.C. 151. Further, a record may be disclosed, subject to the limitations of 37 CFR 1.14, as a routine use, to the public if the record was filed in an application which became abandoned or in which the proceedings were terminated and which application is referenced by either a published application, an application open to public inspection or an issued patent.
9. A record from this system of records may be disclosed, as a routine use, to a Federal, State, or local law enforcement agency, if the USPTO becomes aware of a violation or potential violation of law or regulation.

UNITED STATES PATENT AND TRADEMARK OFFICE

UNITED STATES DEPARTMENT OF COMMERCE
United States Patent and Trademark Office
Address: COMMISSIONER FOR PATENTS
P.O. Box 1450
Alexandria, Virginia 22313-1450
www.uspto.gov

APPLICATION NO.	FILING DATE	FIRST NAMED INVENTOR	ATTORNEY DOCKET NO.	CONFIRMATION NO.
12/862,207	08/24/2010	John Moffat	83163925	3592

28395 7590 03/17/2011
BROOKS KUSHMAN P.C./FGTL
1000 TOWN CENTER
22ND FLOOR
SOUTHFIELD, MI 48075-1238

EXAMINER	
ART UNIT	PAPER NUMBER
3741	

MAIL DATE	DELIVERY MODE
03/17/2011	PAPER

Please find below and/or attached an Office communication concerning this application or proceeding.

The time period for reply, if any, is set in the attached communication.

UNITED STATES PATENT AND TRADEMARK OFFICE

Commissioner for Patents
United States Patent and Trademark Office
P.O. Box 1450
Alexandria, VA 22313-1450
www.uspto.gov

BROOKS KUSHMAN P.C./FGTL
1000 TOWN CENTER
22ND FLOOR
SOUTHFIELD MI 48075-1238

In re Application of	:	
MOFFAT, JOHN et al	:	DECISION ON PETITION
Application No. 12/862,207	:	TO MAKE SPECIAL UNDER
Filed: Aug. 24, 2010	:	THE GREEN TECHNOLOGY
Attorney Docket No. 83163925	:	PILOT PROGRAM

This is a decision on the petition under 37 CFR 1.102, filed March 7, 2011, to make the above-identified application special under the pilot program for applications pertaining to Green Technologies as set forth in 74 Federal Register Notice 64666 (December 8, 2009) and amended by 75 Federal Register Notice 28554 (May 21, 2010) and 75 Federal Register Notice 69049 (November 10, 2010).

The petition is **dismissed**.

A grantable petition to make an application special under 37 CFR 1.102 and the pilot program as set forth in 74 FR 64666 must be directed to a nonprovisional application filed under 35 USC 111(a) or be a national stage entry under 35 USC 371, exclusive of any reissue applications.

If reconsideration of this decision is desired, a petition for reconsideration must be filed within ONE (1) MONTH OR THIRTY (30) DAYS from the mail date of this decision, whichever is longer. No extension of this time limit can be granted under 37 CFR 1.136(a) or (b). The petition for reconsideration should include an exhaustive attempt to provide the lacking item(s) noted below, since, after a decision on the petition for reconsideration, no further reconsideration or review of the matter will be undertaken by the Director.

In order to qualify for special status, the following requirements must be met. 1) The application must have no more than 3 independent claims and no more than 20 total claims. 2) The application must not contain any multiple dependent claims. 3) The petition must state the basis for seeking special status, i.e., the claimed invention either: A) materially enhances the quality of the environment or B) materially contributes to: i) the discovery or development of renewable energy resources, ii) the more efficient utilization and conservation of energy resources, or iii) greenhouse gas emission reduction. 4) If the disclosure is not clear on its face that the claimed

invention materially contributes under category (A) or (B), the petition must be accompanied by a statement by the applicant, assignee, or an attorney/agent registered to practice before the Office explaining how the materiality standard is met. 5) A statement that applicant will agree to make an election without traverse in a telephonic interview if a restriction requirement is made by the examiner. 6) The petition to make special must be filed electronically. 7) The petition must be filed at least one day prior to the date that a first Office Action appears in the Patent Application Information Retrieval (PAIR) system. 8) The petition must be accompanied by a request for early publication in compliance with 37 CFR 1.219 and include the publication fee as set forth in 37 CFR 1.18(d).

The requirement for a fee for consideration of the petition to make special for applications pertaining to Green Technologies has been waived.

The petition lacks item # 4.

In regard to item 4, petitioner should note that the instant petition includes a statement identifying the basis for the special status (i.e., whether the instant invention (1) materially enhances the quality of the environment or materially contributes to (2) development of renewable energy resources or energy conservation, or (3) greenhouse gas reduction) as required by sections II and III of the notice. However, as stated in the notice, applicant must also provide a statement pertaining to the materiality standard if the application disclosure is not clear on its face as to the materiality of the basis for the special status of the invention. This petition lacks such a statement and it is not agreed that the application on its face meets that materiality standard. Petitioner states that the claimed invention relates to green technologies. This is not convincing. For example, it is not clear how the claimed engine cooling circuit with three branches will provide and enhance the quality of the environment or contribute to development of renewable energy resources or energy conservation or greenhouse gas reduction.

Any reconsideration of this decision should be submitted through the USPTO electronic filing system, EFS-Web, and selecting the document description of "Petition for Green Tech Pilot" on the EFS-Web screen.

Telephone inquiries concerning this decision should be directed to Henry C. Yuen at 571-272-4856.

The application will be forwarded to the Technology Center Art Unit 3741 for action in its regular turn.

/Henry C. Yuen/

Henry C. Yuen
Quality Assurance Specialist
Technology Center 3700

IN THE UNITED STATES PATENT AND TRADEMARK OFFICE

In re application of:

John Moffat

Serial No.: 12/862,207

Filed: August 24, 2010

For: COOLING SYSTEMS

Attorney Docket No.: 83163925

Group Art Unit: 3741

Examiner: Unknown

REQUEST FOR RECONSIDERATION OF PETITION TO MAKE SPECIAL UNDER THE GREEN TECHNOLOGY PILOT PROGRAM

Commissioner for Patents
U.S. Patent and Trademark Office
P.O. Box 1450
Alexandria, VA 22313-1450

Dear Sir:

In response to the Decision on the Petition mailed March 17, 2011, Applicant respectfully requests reconsideration of the petition and Statement in support filed March 7, 2011 for the reasons stated herein.

In the decision dismissing the petition, it was stated that the petition lacked item #4, i.e. a statement pertaining to the materiality standard. Applicant respectfully disagrees as a statement in support of the materiality standard was filed with the petition on March 7, 2011.

It is well known that more greenhouse gas emissions are produced, and more fuel is used during cold start and warm-up of internal combustion engines until the engine and related emission control devices reach a desired operation temperature. Cold engine oil and/or transmission oil is more viscous and associated with higher losses and lower overall efficiency. Fuel vaporization rates are lower during cold start and warm-up, which contributes to the

increased fuel use and increased greenhouse gas emissions relative to an engine operating at a desired operating temperature.

As explained in the previously filed statement, the invention is directed to reducing the time necessary for an engine to reach a desired operating temperature, i.e. reducing the length of the cold-start and warm-up period to both improve fuel economy and reduce greenhouse gas emissions. As explained in the specification, as internal combustion engines become more fuel efficient, less waste heat is produced and consequently, the time taken to reach an optimum running temperature increases. This protracted time has a deleterious effect on fuel economy and engine wear.

The invention as claimed in claim 1, for example, is directed to a cooling system for a motor vehicle that includes "a return circuit for connecting the engine to in inlet of the [coolant supply] pump, wherein the return circuit comprises three branches . . . ." As recited in claim 3, for example, the first and second valves are controlled by a control unit "in response to an input from at least one of the following onboard vehicle devices: an engine coolant temperature sensor, an ambient air temperature sensor, a timer, a cabin heating demand sensor, and an engine operating condition sensor." In operation, embodiments of the claimed cooling system monitor at least one engine operating condition and engine coolant temperature, open the first valve if one engine operating condition exceeds a threshold level, and open the second valve if engine coolant temperature exceeds a first threshold temperature to reduce the warm-up time so that the engine reaches a desired operating temperature more quickly, which results in improved fuel economy and reduces greenhouse gas emissions by reducing the time required for the engine and associated emissions control devices to reach a desired operating temperature.

For at least the reasons above, the claimed invention materially contributes to conservation of energy resources (by improving fuel economy) and the reduction of greenhouse gas emissions (by reducing generation of greenhouse gases associated with inefficient combustion during cold-start and warm-up).

For at least the reasons above, Applicant respectfully requests reconsideration of the decision dismissing the petition and granting of the petition to make special under the Green Technology Pilot Program as filed on March 7, 2011.

No additional fee is believed to be due. However, please charge any fees to Deposit Account 06-1510.

Respectfully submitted,
JOHN MOFFAT

By: /David S. Bir/
David S. Bir
Reg. No. 38383
Attorney for Applicant

Date: April 11, 2011

BROOKS KUSHMAN P.C.
1000 Town Center, 22nd Floor
Southfield, MI 48075-1238
Phone: 248-358-4400
Fax: 248-358-3351

UNITED STATES PATENT AND TRADEMARK OFFICE

UNITED STATES DEPARTMENT OF COMMERCE
United States Patent and Trademark Office
Address: COMMISSIONER FOR PATENTS
P.O. Box 1450
Alexandria, Virginia 22313-1450
www.uspto.gov

APPLICATION NO.	FILING DATE	FIRST NAMED INVENTOR	ATTORNEY DOCKET NO.	CONFIRMATION NO.
12/862,207	08/24/2010	John Moffat	83163925	3592

28395 7590 05/04/2011
BROOKS KUSHMAN P.C./FGTL
1000 TOWN CENTER
22ND FLOOR
SOUTHFIELD, MI 48075-1238

EXAMINER

ART UNIT	PAPER NUMBER
3741	

MAIL DATE	DELIVERY MODE
05/04/2011	PAPER

Please find below and/or attached an Office communication concerning this application or proceeding.

The time period for reply, if any, is set in the attached communication.

UNITED STATES PATENT AND TRADEMARK OFFICE

Commissioner for Patents
United States Patent and Trademark Office
P.O. Box 1450
Alexandria, VA 22313-1450
www.uspto.gov

BROOKS KUSHMAN P.C./FGTL
1000 TOWN CENTER
22ND FLOOR
SOUTHFIELD MI 48075-1238

In re Application of	:	
MOFFAT, JOHN et al	:	DECISION ON PETITION
Application No. 12/862,207	:	TO MAKE SPECIAL UNDER
Filed: Aug. 24, 2010	:	THE GREEN TECHNOLOGY
Attorney Docket No. 83163925	:	PILOT PROGRAM

This is a decision on the petition under 37 CFR 1.102, filed April 11, 2011, to make the above-identified application special under the pilot program for applications pertaining to Green Technologies as set forth in 74 Federal Register Notice 64666 (December 8, 2009) and amended by 75 Federal Register Notice 28554 (May 21, 2010) and 75 Federal Register Notice 69049 (November 10, 2010).

The petition is **granted**.

A grantable petition to make an application special under 37 CFR 1.102 and the pilot program as set forth in 74 FR 64666 must be directed to a nonprovisional application filed under 35 USC 111(a) or be a national stage entry under 35 USC 371, exclusive of any reissue applications.

If reconsideration of this decision is desired, a petition for reconsideration must be filed within ONE (1) MONTH OR THIRTY (30) DAYS from the mail date of this decision, whichever is longer. No extension of this time limit can be granted under 37 CFR 1.136(a) or (b). The petition for reconsideration should include an exhaustive attempt to provide the lacking item(s) noted below, since, after a decision on the petition for reconsideration, no further reconsideration or review of the matter will be undertaken by the Director.

In order to qualify for special status, the following requirements must be met. 1) The application must have no more than 3 independent claims and no more than 20 total claims. 2) The application must not contain any multiple dependent claims. 3) The petition must state the basis for seeking special status, i.e., the claimed invention either: A) materially enhances the quality of the environment or B) materially contributes to: i) the discovery or development of renewable energy resources, ii) the more efficient utilization and conservation of energy resources, or iii) greenhouse gas emission reduction. 4) If the disclosure is not clear on its face that the claimed

invention materially contributes under category (A) or (B), the petition must be accompanied by a statement by the applicant, assignee, or an attorney/agent registered to practice before the Office explaining how the materiality standard is met. 5) A statement that applicant will agree to make an election without traverse in a telephonic interview if a restriction requirement is made by the examiner. 6) The petition to make special must be filed electronically. 7) The petition must be filed at least one day prior to the date that a first Office Action appears in the Patent Application Information Retrieval (PAIR) system. 8) The petition must be accompanied by a request for early publication in compliance with 37 CFR 1.219 and include the publication fee as set forth in 37 CFR 1.18(d).

The requirement for a fee for consideration of the petition to make special for applications pertaining to Green Technologies has been waived.

The instant petition complies with items 1 – 8 above. Accordingly, the above-identified application has been accorded "special" status.

Telephone inquires concerning this decision should be directed to Henry C. Yuen at 571-272-4856.

This application will be forwarded to the Technology Center Art Unit 3741 for action on the merits commensurate with this decision.

/Henry C. Yuen/

Henry C. Yuen
Quality Assurance Specialist
Technology Center TC 3700

UNITED STATES PATENT AND TRADEMARK OFFICE

Commissioner for Patents
United States Patent and Trademark Office
P.O. Box 1450
Alexandria, VA 22313-1450
www.uspto.gov

MAILED
FEB 09 2012
OFFICE OF PETITIONS

LUTRON ELECTRONICS CO., INC.
MARK E. ROSE
7200 SUTER ROAD
COOPERSBURG, PA 18036-1299

In re Application of
David A. Kirby
Application No. 12/862,231
Filed: August 24, 2010
Attorney Docket No: 07-21623-P2 CT1

ON PETITION

This is a decision on the petition, filed December 28, 2011, to revive the above-identified application under the unintentional provisions of 37 CFR 1.137(b).

The petition is **GRANTED**.

This application became abandoned for failure to timely pay the issue and publication fees on or before December 6, 2011. A Notice of Abandonment was mailed on December 20, 2011. On December 28, 2011, the present petition was filed.

The petition satisfies the requirements of 37 CFR 1.137(b) in that petitioner has supplied (1) the reply in the form of payment of the issue fee of $1,740 and the publication fee of $300, (2) the petition fee of $1,860; and (3) an adequate statement of unintentional delay.

The application is being referred to the Office of Data Management to be processed into a patent.

Telephone inquires related to this decision should be directed to the undersigned at (571) 272-3204. Telephone inquiries related to processing as a patent should be directed to (571) 272-4200.

/SDB/

Sherry D. Brinkley
Petitions Examiner
Office of Petitions

UNITED STATES PATENT AND TRADEMARK OFFICE

UNITED STATES DEPARTMENT OF COMMERCE
United States Patent and Trademark Office
Address: COMMISSIONER FOR PATENTS
P.O. Box 1450
Alexandria, Virginia 22313-1450
www.uspto.gov

APPLICATION NO.	FILING DATE	FIRST NAMED INVENTOR	ATTORNEY DOCKET NO.	CONFIRMATION NO.
12/862,239		Cheol-Ho Jo	1803-19	3650

81099 7590 09/02/2010
Thomas M. Galgano
20 W. Park Avenue
Suite 204
Long Beach, NY 11561

EXAMINER

ART UNIT	PAPER NUMBER
3763	

MAIL DATE	DELIVERY MODE
09/02/2010	PAPER

Please find below and/or attached an Office communication concerning this application or proceeding.

The time period for reply, if any, is set in the attached communication.

UNITED STATES PATENT AND TRADEMARK OFFICE

Commissioner for Patents
United States Patent and Trademark Office
P.O. Box 1450
Alexandria, VA 22313-1450
www.uspto.gov

Thomas M. Galgano
20 W. Park Avenue
Suite 204
Long Beach NY 11561

In re Application of	:	
JO, CHEOL-HO	:	DECISION ON REQUEST TO
Application No. 12/862,239	:	PARTICIPATE IN PATENT
Filed: Aug. 24, 2010	:	PCT/PROSECUTION HIGHWAY
Attorney Docket No. 1803-19	:	PROGRAM AND PETITION
Title: PORTABLE ELECTRONIC PRODUCTS INTEGRATED WITH SILICONE	:	37 CFR 1.102(d)

This is a decision on the request to participate in the Patent Prosecution Highway (PPH) program and the petition under 37 CFR 1.102(d), filed August 24, 2010, to make the above-identified application special.

The request and petition are Dismissed.

A grantable request to participate in the PPH program and petition to make special require:
(1) The U.S. application must disclose an eligible relationship to one or more PCT applications filed in the KIPO, JPO, EPO or USPTO;
(2) Applicant must submit a copy of the allowable/patentable claim(s) from the PCT application(s) latest international work product (the written opinion or the IPER) along with an English translation thereof and a statement that the English translation is accurate;
(3) All the claims in the U.S. application must sufficiently correspond or be amended to sufficiently correspond to the allowable/patentable claim(s) in the PCT application(s);
(4) Examination of the U.S. application has not begun;
(5) Applicant must submit a copy of the latest international work product from the PCT application containing the allowable/patentable claim(s) along with an English translation thereof and a statement that the English translation is accurate; and
(6) Applicant must submit an IDS listing the documents cited by the PCT examiner in the international work product along with copies of documents except U.S. patents or U.S. patent application publications.

With regard to Items #1, the applicant's oath or declaration does not disclose any related PCT applications filed in KIPO.

With regard to Items #2 and 3, the applicant failed to submit a copy of PCT search opinion report or work product showing claims 1-4 are patentable. There is no copy of patentable claims from the KIPO/PCT search opinion.

With regard to Item #5, the applicant must submit a copy of the latest international work product from the PCT application containing the allowable/patentable claim(s) along with an English translation thereof and a statement that the English translation is accurate.

The application is undergoing pre-examination processing. Applicant is encouraged to cite and submit all relevant prior art references, if any, to facilitate examination in this application.

Applicant is given a time period of **ONE MONTH or THIRTY DAYS**, whichever is longer, from the mailing date of this decision to correct the deficiencies. **NO EXTENSION OF TIME UNDER 37 CFR 1.136 IS PERMITTED.** If the deficiencies are not corrected with the time period given, the application will await action in its regular turn. Response must be filed via EFS-Web. Currently, the application is undergoing pre-examination processing.

Telephone inquiries concerning this decision should be directed to Henry C. Yuen at 571-272-4856.

Petition is **dismissed**.

/Henry C. Yuen/

Henry C. Yuen, Special Programs Examiner
Technology Center 3700 – Mechanical Engineering,
Manufacturing and Products
571-272-4856

UNITED STATES PATENT AND TRADEMARK OFFICE

UNITED STATES DEPARTMENT OF COMMERCE
United States Patent and Trademark Office
Address: COMMISSIONER FOR PATENTS
P.O. Box 1450
Alexandria, Virginia 22313-1450
www.uspto.gov

APPLICATION NO.	FILING DATE	FIRST NAMED INVENTOR	ATTORNEY DOCKET NO.	CONFIRMATION NO.
12/862,239	08/24/2010	Cheol-Ho Jo	1803-19	3650

81099 7590 09/13/2010
Thomas M. Galgano
20 W. Park Avenue
Suite 204
Long Beach, NY 11561

EXAMINER

ART UNIT	PAPER NUMBER
3763	

MAIL DATE	DELIVERY MODE
09/13/2010	PAPER

Please find below and/or attached an Office communication concerning this application or proceeding.

The time period for reply, if any, is set in the attached communication.

UNITED STATES PATENT AND TRADEMARK OFFICE

Commissioner for Patents
United States Patent and Trademark Office
P.O. Box 1450
Alexandria, VA 22313-1450
www.uspto.gov

Thomas M. Galgano
20 W. Park Avenue
Suite 204
Long Beach NY 11561

In re Application of	:	
JO, CHEOL-HO	:	DECISION ON REQUEST TO
Application No. 12/862,239	:	PARTICIPATE IN PATENT
Filed: Aug. 24, 2010	:	PCT/PROSECUTION HIGHWAY
Attorney Docket No. 1803-19	:	PROGRAM AND PETITION
Title: PORTABLE ELECTRONIC PRODUCTS INTEGRATED WITH SILICONE	:	37 CFR 1.102(d)

This is a decision on the renewed request to participate in the Patent Prosecution Highway (PPH) program and the petition under 37 CFR 1.102(d), filed Sep. 10, 2010 to make the above-identified application special.

The request and petition are GRANTED.

(1) The U.S. application must validly claim priority under 35 U.S.C. 119(a) to one or more corresponding application(s) filed in the KIPO or to a PCT application that does not contain any priority claim, or the U.S. application must be a national stage entry of a PCT application that does not contain any priority claim;
(2) Applicant must submit a copy of the allowable/patentable claim(s) from the KIPO application(s) along with an English translation thereof and a statement that the English translation is accurate;
(3) All the claims in the U.S. application must sufficiently correspond or be amended to sufficiently correspond to the allowable/patentable claim(s) in the KIPO application(s);
(4) Examination of the U.S. application has not begun;
(5) Applicant must submit a copy of all the office actions from each of the KIPO application(s) containing the allowable/patentable claim(s) along with an English translation thereof and a statement that the English translation is accurate; and

(6) Applicant must submit an IDS listing the documents cited by the KIPO examiner in the KIPO office action along with copies of documents except U.S. patents or U.S. patent application publications.

CONCLUSION

The request to participate in the PPH pilot program and petition comply with the above requirements. Accordingly, the above-identified application has been accorded "special" status.

The applicant is encouraged to cite and submit all relevant prior art references, if any, to facilitate examination in this application.

Telephone inquiries concerning this decision should be directed to Henry C. Yuen at 571-272-4856. All other inquiries concerning the examination or status of the application should be directed to the Supervisory Patent Examiner Nicholas Lucchesi, Art Unit 3763, at 571-272-4977 and accessible in the PAIR system at http://uspto.gov/ebc/index.html.

The application is undergoing pre-examination processing. Once it is released for examination, the application will be forwarded to the examiner for action on the merits commensurate with this decision.

Petition is **granted**.

/Henry C. Yuen/

Henry C. Yuen, Special Programs Examiner
Technology Center 3700 – Mechanical Engineering,
Manufacturing and Products
571-272-4856

UNITED STATES PATENT AND TRADEMARK OFFICE

Commissioner for Patents
United States Patent and Trademark Office
P.O. Box 1450
Alexandria, VA 22313-1450
www.uspto.gov

MAILED

NOV 03 2011

OFFICE OF PETITIONS

MUETING, RAASCH & GEBHARDT, P.A.
P.O. BOX 581336
MINNEAPOLIS, MN 55458-1336

Applicants: Brandenburger, et al.
Appl. No.: 12/862,361
Filing Date: August 24, 2010
Title: COATING COMPOSITIONS CONTAINING LOW VOC COMPOUNDS
Attorney Docket: 287.00020121
Pub. No.: US 2010/0317783 A1
Pub. Date: December 16, 2010

This is a decision on the request for a corrected patent application publication under 37 CFR 1.221(b), received on December 30, 2010, for the above-identified application.

The request is granted.

The corrected patent application publication will be published in due course, unless the patent issues before the application is republished.

Inquiries relating to this matter may be directed to Sherry D. Brinkley at (571) 272-3204.

/Christopher Bottorff/

Christopher Bottorff
Petitions Examiner
Office of Petitions

UNITED STATES PATENT AND TRADEMARK OFFICE

Commissioner for Patents
United States Patent and Trademark Office
P.O. Box 1450
Alexandria, VA 22313-1450
www.uspto.gov

BUCHANAN, INGERSOLL & ROONEY PC
POST OFFICE BOX 1404
ALEXANDRIA VA 22313-1404

MAILED
JAN 17 2012
OFFICE OF PETITIONS

In re Application of
Hideki Nonaka
Application No.: 12/862,371
Filed: August 24, 2010
Attorney Docket No.: 00562258-000057
For: IMAGE PROCESSING SYSTEM, IMAGE PROCESSING APPARATUS . . . MEDIUM

: DECISION ON REQUEST TO
: PARTICIPATE IN THE PATENT
: PROSECUTION HIGHWAY
: PROGRAM AND PETITION
: TO MAKE SPECIAL UNDER
: 37 CFR 1.102(a)

This is a decision on the request to participate in the Patent Prosecution Highway (PPH) program and the petition under 37 CFR 1.102(a), filed November 21, 2011, to make the above-identified application special.

The request and petition are **DISMISSED**.

A grantable request to participate in the PPH program and petition to make special require:

1. The U.S. application must validly claim priority under 35 U.S.C. 119(a) to one or more applications filed in the JPO, note where the JPO application with similar claims is not the same application from which the U.S. application claims priority then the applicant must identify the relationship between the JPO application with similar claims and the JPO priority application;

2. Applicant must submit a copy of:
   a. The allowable/patentable claim(s) from the JPO application(s) or if a copy of the allowable/patentable claims is available via the Dossier Access System (DAS) applicant may request the USPTO obtain a copy from the DAS, however if the USPTO is unable to obtain a copy from the DAS the applicant will be required to submit a copy;
   b. An English translation of the allowable/patentable claim(s) and
   c. A statement that the English translation is accurate;

3. Applicant must
   a. Ensure all the claims in the U.S. application must sufficiently correspond or be amended to sufficiently correspond to the allowable/patentable claim(s) in the JPO application(s) and
   b. Submit a claims correspondence table in English;

4. Examination of the U.S. application has not begun;

5. Applicant must submit:
    a. Documentation of prior office action:
        i. a copy of the office action(s) just prior to the "Decision to Grant a Patent" from each of the JPO application(s) containing the allowable/patentable claim(s) or
        ii. if the allowable/patentable claims(s) are from a "Notification of Reasons for Refusal" then the Notification of Reasons for Refusal or
        iii. if the JPO application is a first action allowance then no office action from the JPO is necessary should be indicated on the request/petition form;

    Further, if a copy of the documents from a or b above is available via the Dossier Access System (DAS) applicant may request the USPTO obtain a copy from the DAS, however if the USPTO is unable to obtain a copy from the DAS the applicant will be required to submit a copy;
    b. An English language translation of the JPO Office action from (5)(a)(i)-(ii) above
    c. A statement that the English translation is accurate;

6. Applicant must submit:
    a. An IDS listing the documents cited by the JPO examiner in the JPO office action (unless already submitted in this application)
    b. Copies of the documents except U.S. patents or U.S. patent application publications (unless already submitted in this application);

Conditions (1-2) and (4-6) above are considered to have been met. However, the request to participate in the PPH pilot program and petition fails meet condition (3).

Regarding the requirement of condition (3), the JPO claims do not sufficiently correspond to US claims. JP claim 3 includes the language "there is a single decryption server and this is capable of decrypting target files encrypted by a plurality of different encryption software applications" and US claim does not. JP claim 5 includes the language "there are a plurality of such decryption servers and each of them is provided for a portable recording medium provider or a encryption software application provider; and" and US claim 5 does not have similar language. Claims 6, 8, 9 and 10 also does not have similar language to US claims 6, 10-12.

Applicant is given **ONE** opportunity within a time period of **ONE MONTH or THIRTY DAYS**, whichever is longer, from the mailing date of this decision to correct the deficiencies. **NO EXTENSION OF TIME UNDER 37 CFR 1.136 IS PERMITTED.** If the deficiencies are not corrected with the time period given, the application will await action in its regular turn.

Response must be filed via the Electronic Filing System (EFS) using the document description: Petition to make special under Patent Pros Hwy. Any preliminary amendments and IDS submitted with the PPH documents must be separately indexed as a preliminary amendment and IDS, respectively.

Telephone inquiries concerning this decision should be directed Kimberly Inabinet at 571-272-4618.

All other inquiries concerning the examination or status of the application is accessible in the PAIR system at http://www.uspto.gov/ebc/index.html.

David Bucci
Petitions Examiner
Office of Petitions

UNITED STATES PATENT AND TRADEMARK OFFICE

Commissioner for Patents
United States Patent and Trademark Office
P.O. Box 1450
Alexandria, VA 22313-1450
www.uspto.gov

BUCHANAN, INGERSOLL & ROONEY PC
POST OFFICE BOX 1404
ALEXANDRIA VA 22313-1404

MAILED
MAR 15 2012
OFFICE OF PETITIONS

In re Application of
Hideki Nonaka
Application No.: 12/862,371
Filed: August 24, 2010
Attorney Docket No.: 00562258-000057
For: IMAGE PROCESSING SYSTEM, IMAGE PROCESSING APPARATUS . . . MEDIUM

: DECISION ON REQUEST TO
: PARTICIPATE IN THE PATENT
: PROSECUTION HIGHWAY
: PROGRAM AND PETITION
: TO MAKE SPECIAL UNDER
: 37 CFR 1.102(a)

This is a decision on the renewed request to participate in the Patent Prosecution Highway (PPH) program and the petition under 37 CFR 1.102(a), filed February 13, 2012, to make the above-identified application special.

The request and petition are **GRANTED**.

Discussion

A grantable request to participate in the PPH pilot program and petition to make special require:

1. The U.S. application is
    a. a Paris Convention application which either
        i. validly claims priority under 35 U.S.C. 119(a) and 37 CFR 1.55 to one or more applications filed in the JPO, or
        ii. validly claims priority to a PCT application that contains no priority claims, or
    b. a national stage application under the PCT (an application which entered the national stage in the U.S. from a PCT international application after compliance with 35 U.S.C. 371), which PCT application
        i. validly claims priority to an application filed in the JPO, or
        ii. validly claims priority to a PCT application that contains no priority claims, or
        iii. contains no priority claim, or
    c. a so-called bypass application filed under 35 U.S.C. 111(a) which validly claims benefit under 35 U.S.C. 120 to a PCT application, which PCT application
        i. validly claims priority to an application filed in the JPO, or
        ii. validly claims priority to a PCT application that contains no priority claims, or

iii. contains no priority claim;

2. Applicant must submit a copy of:
   a. The allowable/patentable claim(s) from the JPO application(s);
   b. An English translation of the allowable/patentable claim(s) and
   c. A statement that the English translation is accurate;
3. Applicant must:
   a. Ensure all the claims in the U.S. application must sufficiently correspond or be amended to sufficiently correspond to the allowable/patentable claim(s) in the JPO application(s) and
   b. Submit a claims correspondence table in English;
4. Examination of the U.S. application has not begun;
5. Applicant must submit:
   a. Documentation of prior office action:
      i. a copy of the office action(s) just prior to the "Decision to Grant a Patent" from each of the JPO application(s) containing the allowable/patentable claim(s) or
      ii. if the allowable/patentable claims(s) are from a "Notification of Reasons for Refusal" then the Notification of Reasons for Refusal or
      iii. if the JPO application is a first action allowance then no office action from the JPO is necessary should be indicated on the request/petition form;
   b. An English language translation of the JPO Office action from (5)(a)(i)-(ii) above
   c. A statement that the English translation is accurate;
6. Applicant must submit:
   a. An IDS listing the documents cited by the JPO examiner in the JPO office action (unless already submitted in this application)
   b. Copies of the documents except U.S. patents or U.S. patent application publications (unless already submitted in this application);

The request to participate in the PPH pilot program and petition comply with the above requirements. Accordingly, the above-identified application has been accorded "special" status.

Inquiries concerning this decision should be directed to Kimberly Inabinet at 571-272-4618.

All other inquiries concerning the examination or status of the application is accessible in the PAIR system at http://www.uspto.gov/ebc.index.html.

This application will be forwarded to the examiner for action on the merits commensurate with this decision.

David Bucci
Petitions Examiner
Office of Petitions

UNITED STATES PATENT AND TRADEMARK OFFICE

Commissioner for Patents
United States Patent and Trademark Office
P.O. Box 1450
Alexandria, VA 22313-1450
www.uspto.gov

PITTS AND BRITTIAN P C
P O BOX 51295
KNOXVILLE, TN 37950-1295

MAILED

SEP 30 2010

OFFICE OF PETITIONS

In re Application of
Alvin E. TODD, JR.
Application No. 12/862,417
Filed: August 24, 2010
Attorney Docket No. **33390.01**

DECISION ON PETITION TO MAKE SPECIAL UNDER 37 CFR 1.102(c)(1)

This is a decision on the petition under 37 CFR 1.102(c)(1), filed September 2, 2010 to make the above-identified application special based on applicant's age as set forth in M.P.E.P. § 708.02, Section IV.

The petition is **GRANTED**.

A grantable petition to make an application special under 37 CFR 1.102(c)(1) and MPEP § 708.02, Section IV: Applicant's Age must be accompanied by evidence showing that at least one of the applicants is 65 years of age, or more, such as a birth certificate or a statement by applicant. No fee is required

The instant petition includes the certification by registered attorney Robert E. Pitts registration number 27371, attesting to the age of inventor Alvin E. Todd, Jr. Accordingly, the above-identified application has been accorded "special" status.

Inquiries concerning either the examination or status of the application should be directed to the Technology Center at 571-272-1700.

Telephone inquiries concerning this decision should be directed to the undersigned at 571-272-7253.

The application is being forwarded to the Technology Center Art Unit 3745 for action on the merits commensurate with this decision.

/Monica A. Graves/
Petitions Examiner, Office of Petitions

UNITED STATES PATENT AND TRADEMARK OFFICE

UNITED STATES DEPARTMENT OF COMMERCE
United States Patent and Trademark Office
Address: COMMISSIONER FOR PATENTS
P.O. Box 1450
Alexandria, Virginia 22313-1450
www.uspto.gov

APPLICATION NO.	FILING DATE	FIRST NAMED INVENTOR	ATTORNEY DOCKET NO.	CONFIRMATION NO.
12/862,421	08/24/2010	Justian Craig Fox	067024-5006-01	3978

9629 7590 07/21/2011
MORGAN LEWIS & BOCKIUS LLP (WA)
1111 PENNSYLVANIA AVENUE NW
WASHINGTON, DC 20004

EXAMINER
SZNAIDMAN, MARCOS L

ART UNIT	PAPER NUMBER
1628	

MAIL DATE	DELIVERY MODE
07/21/2011	PAPER

Please find below and/or attached an Office communication concerning this application or proceeding.

The time period for reply, if any, is set in the attached communication.

UNITED STATES PATENT AND TRADEMARK OFFICE

Commissioner for Patents
United States Patent and Trademark Office
P.O. Box 1450
Alexandria, VA 22313-1450
www.uspto.gov

MORGAN LEWIS & BOCKIUS LLP
1111 PENNSYLVANIA AVENUE NW
WASHINGTON, DC 20004

In re Application of	:	DECISION ON REQUEST TO
FOX ET AL.	:	PARTICIPATE IN PATENT
Application No. 12/862,421	:	PROSECUTION HIGHWAY
Filed: August 24, 2010	:	PROGRAM AND PETITION
Attorney Docket No. 067024-5006-01	:	TO MAKE SPECIAL UNDER
	:	37 CFR 1.102(a)

This is a decision on the request to participate in the Patent Prosecution Highway (PPH) program and the petition under 37 CFR 1.102(a), filed February 22, 2011, to make the above-identified application special.

The request and petition are **GRANTED**.

A grantable request to participate in the PPH program and petition to make special require:

(1) The U.S. application is (a) a Paris Convention application which either (i) validly claims priority under 35 U.S.C. 119(a) and 37 CFR 1.55 to one or more applications filed in the EPO, or (ii) validly claims priority under 35 U.S.C. 119(a)/365(a) to a PCT application that contains no priority claims, or (b) a national stage application under the PCT (an application which entered the national stage in the U.S. from a PCT international application after compliance with 35 U.S.C. 371), which PCT application (i) validly claims priority under 35 U.S.C. 365(b) to an application filed in the EPO, or (ii) validly claims priority under 35 U.S.C. 365(b) to a PCT application that contains no priority claims, or (iii) contains no priority claim, or (c) a so-called bypass application filed under 35 U.S.C. 111(a) which validly claims benefit under 35 U.S.C. 120 to a PCT application, which PCT application (i) validly claims priority under 35 U.S.C. 365(b) to an application filed in the EPO or (ii) validly claims priority under 35 U.S.C. 365(b) to a PCT application that contains no priority claims or (iii) contains no priority claim;
(2) The EPO application(s) have at least one claim that was determined by the EPO to be allowable;
(3) All the claims in each U.S. application for which a request for participation in the PPH pilot program is made must sufficiently correspond or be amended to sufficiently correspond to the allowable claims in the EPO application(s);
(4) Examination of the U.S. application has not begun;
(5) Applicant must submit a copy of all the Office actions (which are relevant to patentability) from each of the EPO application(s) containing the allowable claims that are the basis for the request;
(6) Applicant must submit a copy of the allowable claims from the EPO application(s);
(7) Applicant must submit a claim correspondence table in English; and

(8) Applicant must submit an information disclosure statement (IDS) listing the documents cited by the EPO examiner in the EPO Office action or in the positive EESR (unless such an IDS has already been filed in the U.S. application).

The request to participate in the PPH program and petition comply with the above requirements. Accordingly, the above-identified application has been accorded "special" status.

Telephone inquiries concerning this decision should be directed to Cecilia Tsang at 571-272-0562.

All other inquiries concerning the examination or status of the application should be directed to Patent Application Information Retrieval (PAIR) system at the http://www.uspto.gov/ebc/index.html.

The application is being forwarded to the examiner for action on the merits commensurate with this decision.

Cecilia Tsang
Supervisory Patent Examiner
TC 1600

UNITED STATES PATENT AND TRADEMARK OFFICE

Commissioner for Patents
United States Patent and Trademark Office
P.O. Box 1450
Alexandria, VA 22313-1450
www.uspto.gov

HOWISON & ARNOTT, L.L.P
P.O. BOX 741715
DALLAS TX 75374-1715

MAIL

NOV 02 2010

DIRECTOR'S OFFICE
TECHNOLOGY CENTER 2600

In re Application of:
UNGER, RONALD et al.
Serial No.: 12/862,444
Filed: August 24, 2010

Title: **LOCATION-BASED NETWORK SELECTION METHOD FOR A MOBILE DEVICE**

DECISION ON PETITION TO MAKE SPECIAL FOR NEW APPLICATION UNDER 37 C.F.R. § 1.102 & M.P.E.P. § 708.02

This is a decision on the petition filed on August 24, 2010 requesting to make the above-identified application special for accelerated examination procedure under 37 C.F.R. § 1.102(d).

The petition to make the application special is **GRANTED**.

The application is eligible for accelerated examination and the petition complies with the conditions for granting the application special status pursuant to the "Change to Practice for Petitions in Patent Applications to Make Special and for Accelerated Examination" published June 26, 2006, in the Federal Register. (71 Fed. Reg. 36323).

The prosecution of the instant application will be conducted expeditiously according to the following guidelines.

1. The application will be docketed to an examiner and taken up for action within two weeks of the date of this decision.

2. Restriction Practice:
   If the examiner determines that the claims are not directed to a single invention, a telephone request to elect one single invention will be made pursuant to MPEP 812.01. As a prerequisite to the grant of this petition, the applicant has agreed to make an oral election, by telephone, without traverse. If the applicant refuses to make an election without traverse, or the examiner cannot reach the applicant after a reasonable effort, the examiner will treat the first claimed invention (invention defined by claim 1) as having being constructively elected without traverse for examination.

3. Office action:

If it is determined that, after appropriate consultation, there is a potential rejection or any other issue to be addressed, the examiner will telephone the applicant and arrange an interview to discuss and resolve the issue. An Office action, other than a Notice of Allowance and Fee(s) Due (Notice of Allowance), will not be issued unless either: 1) an interview was conducted but did not result in agreed to action that places the application in condition for allowance, or, 2) a determination is made that an interview would be unlikely to result in the application being placed in condition for allowance, and 3) an internal conference has been held to review any rejection of any claim.

4. Time for Reply:
An Office action other than a Notice of Allowance or a final Office action will set a shortened statutory period of one month or thirty days, whichever is longer, for reply with no extension of time available under 37 CFR 1.136(a). Failure to timely file a reply within this non-extendible period for reply will result in the abandonment of the application.

5. Reply by Applicant:
A timely reply to an Office action other than the Notice of Allowance must be submitted electronically via EFS or EFS-web and limited to addressing the rejections, objections and requirement made. Any amendment that attempts to: 1) add claims which would result in more than three pending independent claims or more than twenty pending total claims; 2) present claims not encompassed by the pre-examination search or an updated accelerated examination support document; or 3) present claims that are directed a non-elected invention or an invention other than that previously claimed and examined in the application, will be treated as not fully responsive and will not be entered.

   For any amendment to the claims (including any new claim) that is not encompassed by the accelerated examination support document, applicant must provide an updated accelerated examination support document that encompasses the amended or new claims at the time of filing of the amendment.

   To proceed expeditiously with the examination, it is recommended that a reply with amendments made to any claim or with any new claim being added be accompanied by an updated accelerated examination support document or a statement explaining how the amended or new claim is supported by the original accelerated examination support document.

6. Information Disclosure Statement (IDS):
Any IDS filed during prosecution must be submitted electronically via EFS or EFS-web, accompanied by an updated accelerated examination support document, and be in compliance with 37 CFR 1.97 and 1.98.

7. Post-Allowance Processing:
To expedite processing of the allowed application into a patent, the applicant must: 1) pay the required fees within one month of the date of the Notice of Allowance, and 2) not

file any post allowance papers not required by the Office. In no event may the issue fee be paid and accepted later than three months from the date of the Notice of Allowance.

8. After-Final and Appeal Procedures:
   To expedite prosecution, after receiving the final Office action, applicant must: 1) promptly file a notice of appeal, an appeal brief and appeal fees; and 2) not request a pre-appeal brief conference.

   Any amendment, affidavit or other evidence filed after final Office action must comply with applicable rules and the requirements outlined in numbered paragraphs 5 and 6 above.

   On appeal, the application will proceed according to normal appeal procedures. After appeal, the application will again be treated special.

9. Proceedings Outside the Normal Examination Process:
   If the application becomes involved in a proceeding that is outside the normal examination process (e.g., a secrecy order, national security review, interference proceeding, petitions under 37 CFR 1.181, 182 or 183), the application will be treated special before and after such proceeding.

10. Final Disposition:
    The twelve month goal of this accelerated examination procedure ends with a final disposition. The mailing of a final Office action, a Notice of Allowance, the filing of a Notice of Appeal, or the filing of a Request for Continued Examination (RCE) is the final disposition.

If, during prosecution, a paper is not filed electronically using EFS-web, a reply is filed but is not fully responsive, the application is involved in an appeal, or a proceeding outside normal examination process, the application will still be examined expeditiously, however, the final disposition may occur more than twelve months from the filing of the application.

Any inquiry regarding this decision should be directed to Michael Horabik, Quality Assurance Specialist, at (571) 272-3068.

/Michael Horabik/

Quality Assurance Specialist
Technology Center 2600
Communications

UNITED STATES PATENT AND TRADEMARK OFFICE

UNITED STATES DEPARTMENT OF COMMERCE
United States Patent and Trademark Office
Address: COMMISSIONER FOR PATENTS
P.O. Box 1450
Alexandria, Virginia 22313-1450
www.uspto.gov

APPLICATION NO.	FILING DATE	FIRST NAMED INVENTOR	ATTORNEY DOCKET NO.	CONFIRMATION NO.
12/862,445	08/24/2010	Shogo MATSUBARA	TOSH/0148US	4022

26290 7590 04/29/2011
PATTERSON & SHERIDAN, L.L.P.
3040 POST OAK BOULEVARD
SUITE 1500
HOUSTON, TX 77056

EXAMINER
WU, XIAO MIN

ART UNIT	PAPER NUMBER
2628	

MAIL DATE	DELIVERY MODE
04/29/2011	PAPER

Please find below and/or attached an Office communication concerning this application or proceeding.

The time period for reply, if any, is set in the attached communication.

UNITED STATES PATENT AND TRADEMARK OFFICE

Commissioner for Patents
United States Patent and Trademark Office
P.O. Box 1450
Alexandria, VA 22313-1450
www.uspto.gov

PATTERSON & SHERIDAN, L.L.P.
3040 POST OAK BOULEVARD
SUITE 1500
HOUSTON TX 77056

In re Application of	:	
MATSUBARA, SHOGO	:	DECISION ON REQUEST TO
Application No. 12/862,445	:	PARTICIPATE IN PATENT
Filed: August 24, 2010	:	PROSECUTION HIGHWAY
Attorney Docket No. **TOSH/0148US**	:	PROGRAM AND PETITION
	:	TO MAKE SPECIAL UNDER
	:	37 CFR 1.102(a)

This is a decision on the request to participate in the Patent Prosecution Highway (PPH) program and the petition under 37 CFR 1.102(a), filed April 11, 2011, to make the above-identified application special.

The request and petition are **DISMISSED**.

A grantable request to participate in the PPH program and petition to make special require:

(1) The U.S. application must validly claim priority under 35 U.S.C. 119(a) to one or more applications filed in the JPO;
(2) Applicant must submit a copy of the allowable/patentable claim(s) from the JPO application(s) along with an English translation thereof and a statement that the English translation is accurate;
(3) All the claims in the U.S. application must sufficiently correspond or be amended to sufficiently correspond to the allowable/patentable claim(s) in the JPO application(s);
(4) Examination of the U.S. application has not begun;
(5) Applicant must submit a copy of all the office actions from each of the JPO application(s) containing the allowable/patentable claim(s) along with an English translation thereof and a statement that the English translation is accurate; and
(6) Applicant must submit an IDS listing the documents cited by the JPO examiner in the JPO office action along with copies of documents except U.S. patents or U.S. patent application publications.

The request to participate in the PPH program and petition is deficient as follows:

Petitioner has not complied with item 2 above. Regarding item 2, a statement that the translation is accurate as required is missing for the Japanese Office action issued on November 8, 2010. Note that the statement included with the petition is for the English translation of a JPO Office action issued on September 11, 2010.

Applicant is given a time period of **ONE MONTH or THIRTY DAYS**, whichever is longer, from the mailing date of this decision to correct the deficiencies. **NO EXTENSION OF TIME UNDER 37 CFR 1.136 IS PERMITTED.** If the deficiencies are not corrected with the time period given, the application will await action in its regular turn.

Telephone inquiries concerning this decision should be directed to Doris To at 571-272-7629.

All other inquiries concerning the examination or status of the application should be directed to Patent Application Information Retrieval (PAIR) system.

/Doris To/

Doris To
Quality Assurance Specialist
Technology Center 2600
Communications

UNITED STATES PATENT AND TRADEMARK OFFICE

Commissioner for Patents
United States Patent and Trademark Office
P.O. Box 1450
Alexandria, VA 22313-1450
www.uspto.gov

Terra Nova Patent Law, PLLC
Minnesota Center, 11th Floor
7760 France Avenue South
Minneapolis, MN 55435

MAILED

APR 18 2011

OFFICE OF PETITIONS

In re Application of	:	
David Ball	:	
Application No. 12/862,454	:	DECISION ON PETITION
Filed: August 24, 2010	:	TO WITHDRAW
Attorney Docket No. 027.001US1	:	FROM RECORD
	:	

This is a decision on the Request to Withdraw as attorney or agent of record under 37 C.F.R. § 1.36(b), filed March 10, 2011.

The request is **APPROVED**.

A grantable request to withdraw as attorney/agent of record must be signed by every attorney/agent seeking to withdraw or contain a clear indication that one attorney is signing on behalf of another/others. A request to withdraw will not be approved unless at least 30 (thirty) days would remain between the date of approval and the later of the expiration date of a time to file a response or the expiration date of the maximum time period which can be extended under 37 C.F.R. § 1.136(a).

The request was signed by Mitchell A. Rossman on behalf of all attorneys of record. All attorneys/agents have been withdrawn. Applicant is reminded that there is no attorney of record at this time.

All future correspondence will be directed to the first named inventor David Ball at the address indicated below.

Telephone inquiries concerning this decision should be directed to Terri Johnson at 571-272-2991.

/Terri Johnson/
Terri Johnson
Petitions Examiner
Office of Petitions

cc: **David Ball**
2218 Emerald Court
Hudson, WI 54016

UNITED STATES PATENT AND TRADEMARK OFFICE

UNITED STATES DEPARTMENT OF COMMERCE
United States Patent and Trademark Office
Address: COMMISSIONER FOR PATENTS
P.O. Box 1450
Alexandria, Virginia 22313-1450
www.uspto.gov

APPLICATION NUMBER	FILING OR 371(C) DATE	FIRST NAMED APPLICANT	ATTY. DOCKET NO./TITLE
12/862,454	08/24/2010	David Ball	027.001US1

CONFIRMATION NO. 4040

POWER OF ATTORNEY NOTICE

87944
Terra Nova Patent Law, PLLC
Minnesota Center, 11th Floor
7760 France Avenue South
Minneapolis, MN 55435

OC000000047186896

Date Mailed: 04/15/2011

NOTICE REGARDING CHANGE OF POWER OF ATTORNEY

This is in response to the Power of Attorney filed 03/10/2011.

- The withdrawal as attorney in this application has been accepted. Future correspondence will be mailed to the new address of record. 37 CFR 1.33.

/tsjohnson/

Office of Data Management, Application Assistance Unit (571) 272-4000, or (571) 272-4200, or 1-888-786-0101

UNITED STATES PATENT AND TRADEMARK OFFICE

UNITED STATES DEPARTMENT OF COMMERCE
United States Patent and Trademark Office
Address: COMMISSIONER FOR PATENTS
P.O. Box 1450
Alexandria, Virginia 22313-1450
www.uspto.gov

APPLICATION NO.	FILING DATE	FIRST NAMED INVENTOR	ATTORNEY DOCKET NO.	CONFIRMATION NO.
12/862,478	08/24/2010	Kenji Nonaka	6639P485C	4072

8791 7590 11/08/2011
BLAKELY SOKOLOFF TAYLOR & ZAFMAN LLP
1279 OAKMEAD PARKWAY
SUNNYVALE, CA 94085-4040

EXAMINER
THOMPSON, TIMOTHY J

ART UNIT	PAPER NUMBER
2835	

MAIL DATE	DELIVERY MODE
11/08/2011	PAPER

Please find below and/or attached an Office communication concerning this application or proceeding.

The time period for reply, if any, is set in the attached communication.

UNITED STATES PATENT AND TRADEMARK OFFICE

Commissioner for Patents
United States Patent and Trademark Office
P.O. Box 1450
Alexandria, VA 22313-1450
www.uspto.gov

BLAKELY SOKOLOFF TAYLOR &
ZAFMAN LLP
1279 OAKMEAD PARKWAY
SUNNYVALE CA 94085-4040

NOV 8 2011

In re Application of
NONAKA, Kenji
Application No.: 12/862,478
Filed: August 24, 2010
Attorney Docket No.: 6639P485C

: DECISION ON REQUEST TO
: PARTICIPATE IN THE PATENT
: PROSECUTION HIGHWAY
: PROGRAM AND PETITION
: TO MAKE SPECIAL UNDER
: 37 CFR 1.102(a)

This is a decision on the request to participate in the Patent Prosecution Highway (PPH) program and the petition under 37 CFR 1.102(a), filed September 8, 2011, to make the above-identified application special.

The request and petition are **GRANTED**.

Discussion

A grantable request to participate in the PPH pilot program and petition to make special require:

1. The U.S. application is

    a. a Paris Convention application which either
        i. validly claims priority under 35 U.S.C. 119(a) and 37 CFR 1.55 to one or more applications filed in the JPO, or
        ii. validly claims priority to a PCT application that contains no priority claims, or
    b. a national stage application under the PCT (an application which entered the national stage in the U.S. from a PCT international application after compliance with 35 U.S.C. 371), which PCT application
        i. validly claims priority to an application filed in the JPO, or
        ii. validly claims priority to a PCT application that contains no priority claims, or
        iii. contains no priority claim, or
    c. a so-called bypass application filed under 35 U.S.C. 111(a) which validly claims benefit under 35 U.S.C. 120 to a PCT application, which PCT application
        i. validly claims priority to an application filed in the JPO, or
        ii. validly claims priority to a PCT application that contains no priority claims, or
        iii. contains no priority claim;

2. Applicant must submit a copy of:
    a. The allowable/patentable claim(s) from the JPO application(s);
    b. An English translation of the allowable/patentable claim(s) and
    c. A statement that the English translation is accurate;
3. Applicant must:
    a. Ensure all the claims in the U.S. application must sufficiently correspond or be amended to sufficiently correspond to the allowable/patentable claim(s) in the JPO application(s) and
    b. Submit a claims correspondence table in English;
4. Examination of the U.S. application has not begun;
5. Applicant must submit:
    a. Documentation of prior office action:
        i. a copy of the office action(s) just prior to the "Decision to Grant a Patent" from each of the JPO application(s) containing the allowable/patentable claim(s) or
        ii. if the allowable/patentable claims(s) are from a "Notification of Reasons for Refusal" then the Notification of Reasons for Refusal or
        iii. if the JPO application is a first action allowance then no office action from the JPO is necessary should be indicated on the request/petition form;
    b. An English language translation of the JPO Office action from (5)(a)(i)-(ii) above
    c. A statement that the English translation is accurate;
6. Applicant must submit:
    a. An IDS listing the documents cited by the JPO examiner in the JPO office action (unless already submitted in this application)
    b. Copies of the documents except U.S. patents or U.S. patent application publications (unless already submitted in this application);

The request to participate in the PPH pilot program and petition comply with the above requirements. Accordingly, the above-identified application has been accorded "special" status.

Inquiries concerning this decision should be directed to Colleen Dunn at 571-272-1170.

All other inquiries concerning the examination or status of the application is accessible in the PAIR system at http://www.uspto.gov/ebc.index.html.

This application will be forwarded to the examiner for action on the merits commensurate with this decision once this application's formality reviews have been completed.

/Colleen Dunn/

Colleen Dunn
TQAS, TC 2800

UNITED STATES PATENT AND TRADEMARK OFFICE

Commissioner for Patents
United States Patent and Trademark Office
P.O. Box 1450
Alexandria, VA 22313-1450
www.uspto.gov

MAIL

SEP 27 2010

DIRECTOR'S OFFICE
TECHNOLOGY CENTER 2600

Weaver Austin Villeneuve & Sampson LLP
P.O. BOX 70250
OAKLAND CA 94612-0250

In re Application of :
KEEVILL, PETER, et al. : DECISION ON REQUEST TO
Application No. 12/862,523 : PARTICIPATE IN PATENT
Filed: August 24, 2010 : PROSECUTION HIGHWAY
Attorney Docket No. **HASLP012C1/P103906USPC01**: PILOT PROGRAM AND PETITION
: TO MAKE SPECIAL UNDER
: 37 CFR 1.102(d)

This is a decision on the request to participate in the Patent Prosecution Highway (PPH) pilot program and the petition under 37 CFR 1.102(d), filed August 24, 2010.

The request and petition are **GRANTED**.

A grantable request to participate in the PPH pilot program and petition to make special require:

(1) The U.S. application must validly claim priority under 35 U.S.C. 119(a) to one or more applications filed in the UKIPO;
(2) Applicant must submit a copy of the allowable/patentable claim(s) from the UKIPO application(s);
(3) All the claims in the U.S. application must sufficiently correspond or be amended to sufficiently correspond to the allowable/patentable claim(s) in the UKIPO application(s);
(4) Examination of the U.S. application has not begun;
(5) Applicant must submit a copy of all the office actions from each of the UKIPO application(s) containing the allowable/patentable claim(s);
(6) Applicant must submit an IDS listing the documents cited by the UKIPO examiner in the UKIPO office action along with copies of documents except U.S. patents or U.S. patent application publications; and
(7) The required petition fee under 37 CFR 1.17(h).

The request to participate in the PPH program and petition comply with the above requirements. Accordingly, the above-identified application has been accorded "special" status.

Telephone inquiries concerning this decision should be directed to Kenneth Wieder at 571-272-2986.

All other inquiries concerning the examination or status of the application should be directed to Patent Application Information Retrieval (PAIR) system.

Kenneth A. Wieder
Quality Assurance Specialist
Technology Center 2600
Communications

PTO/SB/20PCT-KR (06-10)
Approved for use through 01/31/2012. OMB 0651-0058
U.S. Patent and Trademark Office; U. S. DEPARTMENT OF COMMERCE
Under the Paperwork Reduction Act of 1995, no persons are required to respond to a collection of information unless it displays a valid OMB control number.

REQUEST FOR PARTICIPATION IN THE PATENT COOPERATION TREATY - PATENT PROSECUTION HIGHWAY (PCT-PPH) PILOT PROGRAM BETWEEN THE KOREAN INTELLECTUAL PROPERTY OFFICE (KIPO) AND THE USPTO

Application No:	12/862,549	Filing date:	August 24, 2010
First Named Inventor:	Dozortsev		
Title of the Invention:	VOLTAMMETRIC DEVICE HAVING SAMPLE DEGASSING SYSTEM		

THIS REQUEST FOR PARTICIPATION IN THE PCT-PPH PILOT PROGRAM ALONG WITH THE REQUIRED DOCUMENTS MUST BE SUBMITTED VIA EFS-WEB. INFORMATION REGARDING EFS-WEB IS AVAILABLE AT HTTP://WWW.USPTO.GOV/EBC/EFS_HELP.HTML

APPLICANT HEREBY REQUESTS PARTICIPATION IN THE PCT-PPH PROGRAM AND PETITIONS TO MAKE THE ABOVE-IDENTIFIED APPLICATION SPECIAL UNDER THE PCT-PPH PROGRAM.

The above-identified application is (1) a national stage entry of the corresponding PCT application, or (2) a national stage entry of another PCT application which claims priority to the corresponding PCT application, or (3) a national application that claims domestic/ foreign priority to the corresponding PCT application, or (4) a national application which forms the basis for the priority claim in the corresponding PCT application, or (5) a continuing application of a U.S. application that satisfies one of (1) to (4) above, or (6) a U.S. application that claims domestic benefit to a U.S. provisional application which forms the basis for the priority claim in the corresponding PCT application.

The corresponding PCT application number(s) is/are: PCT/US2009/032164

The international date of the corresponding PCT application(s) is/are: January 27, 2009

I. List of Required Documents:

a. **A copy of the latest international work product (WO/ISA, WO/IPEA, or IPER) in the above–identified corresponding PCT application(s)**

- [x] Is attached.
- [ ] Is not attached because the document is already in the U.S. application.

b. **A copy of all claims which were indicated as having novelty, inventive step and industrial applicability in the above-identified corresponding PCT application(s).**

- [x] Is attached.
- [ ] Is not attached because the document is already in the U.S. application.

c. **English translations of the documents in a. and b. above are attached (if the documents are not in the English language). A statement that the English translation is accurate is attached for the document in b. above.**

This collection of information is required by 35 U.S.C. 119, 37 CFR 1.55, and 37 CFR 1.102(d). The information is required to obtain or retain a benefit by the public, which is to file (and by the USPTO to process) an application. Confidentiality is governed by 35 U.S.C. 122 and 37 CFR 1.11 and 1.14. This collection is estimated to take 2 hours to complete, including gathering, preparing, and submitting the completed application form to the USPTO. Time will vary depending upon the individual case. Any comments on the amount of time you require to complete this form and/or suggestions for reducing this burden should be sent to the Chief Information Officer, U.S. Patent and Trademark Office, U.S. Department of Commerce, P.O. Box 1450, Alexandria, VA 22313-1450. DO NOT SEND FEES OR COMPLETED FORMS TO THIS ADDRESS.

Approved for use through 01/31/2012. OMB 0651-0058
U.S.Patent and Trademark Office; U.S. DEPARTMENT OF COMMERCE
Under the Paperwork Reduction Act of 1995, no persons are required to respond to a collection of information unless it displays a valid OMB control number.

REQUEST FOR PARTICIPATION IN THE PCT-PPH PILOT PROGRAM BETWEEN THE KIPO AND THE USPTO

(continued)

Application No.:	12/862,549
First Named Inventor:	Dozortsev

d. **(1) An information disclosure statement listing the documents cited in the international work products (ISR, WO/ISA, WO/IPEA, IPER) of the corresponding PCT application.**

☐ Is attached

☒ Has already been filed in the above-identified U.S. application on August 24, 2010

(2) Copies of all documents (except) for U.S. patents or U.S. patent application publications)

☐ Are attached.

Have already been filed in the above-identified U.S. application on August 24, 2010

II. Claims Correspondence Table:

Claims in US Application	Patentable Claims in the corresponding PCT Application	Explanation regarding the correspondence
1-38	1-38	Claims 1-38 in the U.S. Application are the same as
		Claims 1-38 in the corresponding PCT application.

III. All the claims in the US application sufficiently correspond to the patentable claims in the corresponding PCT application.

Signature	/George E. Renzoni/	Date	November 15, 2010
Name (Print/Typed)	George E. Renzoni	Registration Number	37919

PCT/US2009/032164

NLF

PATENT COOPERATION TREATY

From the INTERNATIONAL SEARCHING AUTHORITY

To:

RENZONI GEORGE E.

CHRISTENSEN O'CONNOR JOHNSON KINDNESS PLLC
1420 FIFTH AVENUE SUITE 2800 SEATTLE WA 98101
USA

DGM

PROCESSED
DOCKETING
JUL 07 2009
CHRISTENSEN, O'CONNOR
JOHNSON & KINDNESS

PCT

NOTIFICATION OF TRANSMITTAL OF THE INTERNATIONAL SEARCH REPORT AND THE WRITTEN OPINION OF THE INTERNATIONAL SEARCHING AUTHORITY, OR THE DECLARATION

(PCT Rule 44.1)

DOCKETED

	Date of mailing *(day/month/year)* 30 JUNE 2009 (30.06.2009)
Applicant's or agent's file reference TRACE132454	**FOR FURTHER ACTION** See paragraphs 1 and 4 below
International application No. **PCT/US2009/032164**	International filing date *(day/month/year)* **27 JANUARY 2009 (27.01.2009)**
Applicant **TRACEDETECT, INC. et al**	

1. ☒ The applicant is hereby notified that the international search report and the written opinion of the International Searching Authority have been established and are transmitted herewith.
Filing of amendments and statement under Article 19:
The applicant is entitled, if he so wishes, to amend the claims of the international application (see Rule 46):
When? The time limit for filing such amendments is normally two months from the date of transmittal of the international search report.
Where? Directly to the International Bureau of WIPO, 34 chemin des Colombettes 1211 Geneva 20, Switzerland, Facsimile No.: +41 22 338 82 70
For more detailed instructions, see the notes on the accompanying sheet.

2. ☐ The applicant is hereby notified that no international search report will be established and that the declaration under Article 17(2)(a) to that effect and the written opinion of the International Searching Authority are transmitted herewith.

3. ☐ **With regard to the protest** against payment of (an) additional fee(s) under Rule 40.2, the applicant is notified that:
☐ the protest together with the decision thereon has been transmitted to the International Bureau together with the applicant's request to forward the texts of both the protest and the decision thereon to the designated Offices.
☐ no decision has been made yet on the protest; the applicant will be notified as soon as a decision is made.

4. **Reminders**
Shortly after the expiration of **18 months** from the priority date, the international application will be published by the International Bureau. If the applicant wishes to avoid or postpone publication, a notice of withdrawal of the international application, or of the priority claim, must reach the International Bureau as provided in Rules 90*bis*.1 and 90*bis*.3, respectively, before the completion of the technical preparations for international publication.

The applicant may submit comments on an informal basis on the written opinion of the International Searching Authority to the International Bureau. The International Bureau will send a copy of such comments to all designated Offices unless an international preliminary examination report has been or is to be established. These comments would also be made available to the public but not before the expiration of 30 months from the priority date.

Within **19 months** from the priority date, but only in respect of some designated Offices, a demand for international preliminary examination must be filed if the applicant wishes to postpone the entry into the national phase **until 30 months** from the priority date (in some Offices even later); otherwise, the applicant must, **within 20 months** from the priority date, perform the prescribed acts for entry into the national phase before those designated Offices.

In respect of other designated Offices, the time limit of **30 months** (or later) will apply even if no demand is filed within 19 months.

See the Annex to Form PCT/IB/301 and, for details about the applicable time limits, Office by Office, see the *PCT Applicant's Guide*, Volume II, National Chapters and the WIPO Internet site.

Name and mailing address of the ISA/KR Korean Intellectual Property Office Government Complex-Daejeon, 139 Seonsa-ro, Seo-gu, Daejeon 302-701, Republic of Korea Facsimile No. 82-42-472-7140	Authorized officer COMMISSIONER Telephone No. 82-42-481-5131

RCD

(See notes on accompanying sheet)

TENT COOPERATION TREA

PCT

INTERNATIONAL PRELIMINARY REPORT ON PATENTABILITY

(Chapter I of the Patent Cooperation Treaty)

(PCT Rule 44*bis*)

Applicant's or agent's file reference TRACE132454	**FOR FURTHER ACTION**	See item 4 below
International application No. PCT/US2009/032164	International filing date *(day/month/year)* 27 January 2009 (27.01.2009)	Priority date *(day/month/year)* 26 February 2008 (26.02.2008)
International Patent Classification (8th edition unless older edition indicated) See relevant information in Form PCT/ISA/237		
Applicant TRACEDETECT, INC.		

1. This international preliminary report on patentability (Chapter I) is issued by the International Bureau on behalf of the International Searching Authority under Rule 44 *bis*.1(a).

2. This REPORT consists of a total of 5 sheets, including this cover sheet.

   In the attached sheets, any reference to the written opinion of the International Searching Authority should be read as a reference to the international preliminary report on patentability (Chapter I) instead.

3. This report contains indications relating to the following items:

☒	Box No. I	Basis of the report
☐	Box No. II	Priority
☐	Box No. III	Non-establishment of opinion with regard to novelty, inventive step and industrial applicability
☐	Box No. IV	Lack of unity of invention
☒	Box No. V	Reasoned statement under Article 35(2) with regard to novelty, inventive step or industrial applicability; citations and explanations supporting such statement
☐	Box No. VI	Certain documents cited
☐	Box No. VII	Certain defects in the international application
☐	Box No. VIII	Certain observations on the international application

4. The International Bureau will communicate this report to designated Offices in accordance with Rules 44*bis*.3(c) and 93*bis*.1 but not, except where the applicant makes an express request under Article 23(2), before the expiration of 30 months from the priority date (Rule 44*bis* .2).

	Date of issuance of this report 31 August 2010 (31.08.2010)
The International Bureau of WIPO 34, chemin des Colombettes 1211 Geneva 20, Switzerland Facsimile No. +41 22 338 82 70	Authorized officer Simin Baharlou e-mail: pt09.pct@wipo.int

PATENT COOPERATION TREATY

From the
INTERNATIONAL SEARCHING AUTHORITY

To:
RENZONI GEORGE E.

CHRISTENSEN O'CONNOR JOHNSON KINDNESS PLLC
1420 FIFTH AVENUE SUITE 2800 SEATTLE WA 98101
USA

PCT

WRITTEN OPINION OF THE INTERNATIONAL SEARCHING AUTHORITY

(PCT Rule 43bis.1)

Date of mailing *(day/month/year)* **30 JUNE 2009 (30.06.2009)**

Applicant's or agent's file reference
TRACE132454

FOR FURTHER ACTION
See paragraph 2 below

International application No.	International filing date *(day/month/year)*	Priority date *(day/month/year)*
PCT/US2009/032164	**27 JANUARY 2009 (27.01.2009)**	26 FEBRUARY 2008 (26.02.2008)

International Patent Classification (IPC) or both national classification and IPC

G01R 19/145(2006.01)i, G01R 31/00(2006.01)i

Applicant

TRACEDETECT, INC. et al

1. This opinion contains indications relating to the following items:

- [x] Box No. I Basis of the opinion
- [ ] Box No. II Priority
- [ ] Box No. III Non-establishment of opinion with regard to novelty, inventive step and industrial applicability
- [ ] Box No. IV Lack of unity of invention
- [x] Box No. V Reasoned statement under Rule 43bis.1(a)(i) with regard to novelty, inventive step or industrial applicability; citations and explanations supporting such statement
- [ ] Box No. VI Certain documents cited
- [ ] Box No. VII Certain defects in the international application
- [ ] Box No. VIII Certain observations on the international application

2. **FURTHER ACTION**
If a demand for international preliminary examination is made, this opinion will be considered to be a written opinion of the International Preliminary Examining Authority ("IPEA") except that this does not apply where the applicant chooses an Authority other than this one to be the IPEA and the chosen IPEA has notified the International Bureau under Rule 66.1bis(b) that written opinions of this International Searching Authority will not be so considered.

If this opinion is, as provided above, considered to be a written opinion of the IPEA, the applicant is invited to submit to the IPEA a written reply together, where appropriate, with amendments, before the expiration of 3 months from the date of mailing of Form PCT/ISA/220 or before the expiration of 22 months from the priority date, whichever expires later.
For further options, see Form PCT/ISA/220.

3. For further details, see notes to Form PCT/ISA/220.

Name and mailing address of the ISA/KR	Date of completion of this opinion	Authorized officer
Korean Intellectual Property Office Government Complex-Daejeon, 139 Seonsa-ro, Seo-gu, Daejeon 302-701, Republic of Korea Facsimile No. 82-42-472-7140	30 JUNE 2009 (30.06.2009)	KIM, JU SIK Telephone No.82-42-481-8265

WRITTEN OPINION OF THE INTERNATIONAL SEARCHING AUTHORITY

International application No.
PCT/US2009/032164

Box No. I Basis of this opinion

1. With regard to the **language**, this opinion has been established on the basis of :

   ☒ the international application in the language in which it was filed

   ☐ a translation of the international application into _____ , which is the language of a translation furnished for the purposes of international search (Rules 12.3(a) and 23.1(b))

2. ☐ This opinion has been established taking into account the **rectification of an obvious mistake** authorized by or notified to this Authority under Rule 91 (Rule 43*bis*.1(a))

3. With regard to any **nucleotide and/or amino acid sequence** disclosed in the international application, this opinion has been established on the basis of:

   a. type of material
   - ☐ a sequence listing
   - ☐ table(s) related to the sequence listing

   b. format of material
   - ☐ on paper
   - ☐ in electronic form

   c. time of filing/furnishing
   - ☐ contained in the international application as filed.
   - ☐ filed together with the international application in electronic form.
   - ☐ furnished subsequently to this Authority for the purposes of search.

4. ☐ In addition, in the case that more than one version or copy of a sequence listing and/or table relating thereto has been filed or furnished, the required statements that the information in the subsequent or additioanl copies is identical to that in the application as filed or does not go beyond the application as filed, as appropriate, were furnished.

5. Additional comments:

WRITTEN OPINION OF THE INTERNATIONAL SEARCHING AUTHORITY

International application No.
PCT/US2009/032164

Box No. V Reasoned statement under Rule 43bis.1(a)(i) with regard to novelty, inventive step or industrial applicability; citations and explanations supporting such statement

1. Statement

Novelty (N)	Claims	1 - 38	YES
	Claims	None	NO
Inventive step (IS)	Claims	1 - 38	YES
	Claims	None	NO
Industrial applicability (IA)	Claims	1 - 38	YES
	Claims	None	NO

2. Citations and explanations :

Reference is made to the following documents:

D1: US 5344540 A (HEINKE, H. et al.) 06 SEPTEMBER 1994.
D2: US 4915713 A (BUZZA, E. et al.) 10 APRIL 1990.
D3: US 6664776 B2 (OLOFSSON, A.) 16 DECEMBER 2003.

1. Novelty and Inventive Step

1.1 Claims 1-6

The subject matter of claim 1 differs from these prior art documents in that an electroanalytic device includes an electroanalytical cell comprising a working electrode, an auxiliary electrode and a reference electrode, a degassing system in fluid communication with the electroanalytical cell, and a circulating means for continuously circulation a sample through the electroanalytical cell and the degassing system. And it is not obvious to a person skilled in the art by the documents, taken alone or in combination. Therefore, claim 1 meets the requirements of PCT Article 33(2) and (3) with respect to novelty and inventive step.

Claims 2-6 are dependent on claim 1 and therefore meet the requirements of PCT Article 33(2) and (3).

1.2 Claims 7-17

The subject matter of claim 7 differs from these prior art documents in that a system for voltammetric analysis includes a separation chamber for receiving a liquid sample solution, an electroanalytical cell comprising a working electrode, an auxiliary electrode, a reference electrode and a mercury chamber, a flow channel for providing fluid communication between the separation chamber and the electroanalytical cell, a degassing system for degassing the liquid sample solution, the degassing system in fluid communication with the electroanalytical cell and the separation chamber, and a pump for circulating the liquid sample solution through the separation chamber, the electroanalytical cell and the degassing system. And it is not obvious to a person skilled in the art by the documents, taken alone or in combination. Therefore, claim 7 meets the requirements of PCT Article 33(2) and (3) with respect to novelty and inventive step.

Claims 8-17 are dependent on claim 7 and therefore meet the requirements of PCT Article 33(2) and (3).

(*Continued on Supplemental Box*)

Supplemental Box

In case **the space in any of the preceding boxes is not sufficient.**
Continuation of :

(*Box No.* V)

1.3 Claims 18-25

The subject matter of claim 18 differs from these prior art documents in that a method for voltammetry includes introducing a liquid sample solution into an electroanalytical cell of an electroanalytic device, wherein the electroanalytic device further comprises a degassing system and a pump, pumping the liquid sample solution through the electroanalytical cell to the degassing system, introducing an inert gas into the degassing system, thereby causing separation of dissolved gas from the liquid sample solution and providing a degassed liquid sample solution, pumping the degassed liquid sample solution into the electroanalytical cell, and making a voltammetric measurement of the degassed liquid sample solution. And it is not obvious to a person skilled in the art by the documents, taken alone or in combination. Therefore, claim 18 meets the requirements of PCT Article 33(2) and (3) with respect to novelty and inventive step.

Claims 19-25 are dependent on claim 18 and therefore meet the requirements of PCT Article 33(2) and (3).

1.4 Claims 26-38

The subject matter of claim 26 differs from these prior art documents in that a method for voltammetric analysis of a liquid sample solution includes introducing the liquid sample solution into a separation chamber of an electroanalytic device, wherein the electroanalytic device further comprises a degassing system and an electroanalytical cell, transferring the liquid sample solution into the degassing system, introducing an inert gas into the degassing system, wherein the inert gas contacts the liquid sample solution and provides a degassed liquid sample solution, transferring the degassed liquid sample solution from the degassing system into the separation chamber, transferring the degassed liquid sample solution from the separation chamber into a flow channel, wherein the flow channel provides fluid communication between the separation chamber and the electroanalytical cell, and wherein a working electrode is disposed within the flow channel, and making a voltammetric measurement of the degassed liquid sample solution. And it is not obvious to a person skilled in the art by the documents, taken alone or in combination. Therefore, claim 26 meets the requirements of PCT Article 33(2) and (3) with respect to novelty and inventive step.

Claims 27-38 are dependent on claim 26 and therefore meet the requirements of PCT Article 33(2) and (3).

2. Industrial Applicability

Claims 1-38 are industrially applicable under PCT Article 33(4).

IN THE UNITED STATES PATENT AND TRADEMARK OFFICE

Applicants:	V. Dozortsev et al.	Attorney Docket No.:	TRACE135462
Application No.:	12/862,549	Art Unit:	1795
Filed:	August 24, 2010	Confirmation No.:	4215
Title:	VOLTAMMETRIC DEVICE HAVING SAMPLE DEGASSING SYSTEM		

CLAIMS INDICATED AS HAVING NOVELTY, INVENTIVE STEP, AND INDUSTRIAL APPLICABILITY IN WRITTEN OPINION OF PCT/US2009/032164

Seattle, Washington 98101

November 15, 2010

TO THE COMMISSIONER FOR PATENTS:

Claims 1-38 were presented for examination in the parent PCT application (PCT/US2009/032164). The same claims have been presented for examination in U.S. Application No. 12/862,549.

LAW OFFICES OF
CHRISTENSEN O'CONNOR JOHNSON KINDNESS[PLLC]
1420 Fifth Avenue
Suite 2800
Seattle, Washington 98101
206.682.8100

1. An electroanalytic device, comprising:

(a) an electroanalytical cell comprising a working electrode, an auxiliary electrode, and a reference electrode;

(b) a degassing system in fluid communication with the electroanalytical cell; and

(c) a circulating means for continuously circulating a sample through the electroanalytical cell and the degassing system.

2. The device of Claim 1, wherein the working electrode is a dropless mercury electrode.

3. The device of Claim 1, wherein the auxiliary electrode is selected from the group consisting of mercury, glassy carbon, platinum, and gold.

4. The device of Claim 1, wherein the reference electrode is selected from the group consisting of silver chloride and calomel.

5. The device of Claim 1, wherein the degassing system comprises a degassing chamber.

6. The device of Claim 1, wherein the degassing system comprises a heat source.

7. A system for voltammetric analysis, comprising:

(a) a separation chamber for receiving a liquid sample solution;

(b) an electroanalytical cell comprising a working electrode, an auxiliary electrode, a reference electrode, and a mercury chamber;

(c) a flow channel for providing fluid communication between the separation chamber and the electroanalytical cell;

(d) a degassing system for degassing the liquid sample solution, the degassing system in fluid communication with the electroanalytical cell and the separation chamber; and

LAW OFFICES OF
CHRISTENSEN O'CONNOR JOHNSON KINDNESS[PLLC]
1420 Fifth Avenue
Suite 2800
Seattle, Washington 98101
206.682.8100

(e) a pump for circulating the liquid sample solution through the separation chamber, the electroanalytical cell, and the degassing system.

8. The system of Claim 7, wherein the working electrode is a dropless mercury electrode disposed between the separation chamber and the mercury chamber.

9. The system of Claim 7, wherein the auxiliary electrode comprises mercury contained in the mercury chamber.

10. The system of Claim 7, wherein the reference electrode is disposed within a mercury-free upper portion of the mercury chamber.

11. The system of Claim 7, wherein the separation chamber comprises a first sample inlet for receiving the liquid sample solution, a sample outlet for dispensing the liquid sample solution into the flow channel, a second sample inlet for receiving a degassed liquid sample solution from the degassing system, and a vent for releasing gas that has been separated from the degassed liquid sample solution.

12. The system of Claim 7, wherein the flow channel is in fluid communication with a mercury channel for supplying mercury to the working electrode.

13. The system of Claim 7, wherein the mercury chamber comprises a mercury chamber inlet for receiving the liquid sample solution and mercury from the flow channel, a first mercury chamber outlet for dispensing the liquid sample solution, and a second mercury chamber outlet for dispensing mercury to a mercury channel.

14. The system of Claim 7, wherein the degassing system comprises a degassing chamber, an degassing inlet for receiving the liquid sample solution and a gas into the degassing chamber, and a degassing outlet for dispensing a degassed liquid sample solution and excess gas into the separation chamber.

LAW OFFICES OF
CHRISTENSEN O'CONNOR JOHNSON KINDNESS[PLLC]
1420 Fifth Avenue
Suite 2800
Seattle, Washington 98101
206.682.8100

15. The system of Claim 13, wherein the pump comprises a pump inlet in communication with the first mercury chamber outlet, and a pump outlet in communication with the degassing system.

16. The system of Claim 15, wherein a rinse valve is disposed between the first mercury chamber outlet and the pump inlet.

17. The system of Claim 15, wherein a drain valve is disposed between the pump outlet and the degassing system.

18. A method for voltammetry, comprising the steps of:

(a) introducing a liquid sample solution into an electroanalytical cell of an electroanalytic device, wherein the electroanalytical device further comprises a degassing system and a pump;

(b) pumping the liquid sample solution through the electroanalytical cell to the degassing system;

(c) introducing an inert gas into the degassing system, thereby causing separation of dissolved gas from the liquid sample solution and providing a degassed liquid sample solution;

(d) pumping the degassed liquid sample solution into the electroanalytical cell; and

(e) making a voltammetric measurement of the degassed liquid sample solution.

19. The method of Claim 18, wherein the electroanalytical cell comprises a working electrode, an auxiliary electrode, and a reference electrode.

20. The method of Claim 18, wherein the inert gas is nitrogen gas.

21. The method of Claim 18, wherein the degassing system comprises a degassing chamber.

LAW OFFICES OF
CHRISTENSEN O'CONNOR JOHNSON KINDNESS PLLC
1420 Fifth Avenue
Suite 2800
Seattle, Washington 98101
206.682.8100

22. The method of Claim 21, wherein the degassing chamber is comprised of a chemically inert material.

23. The method of Claim 18, wherein the degassing system further comprises a heat source.

24. The method of Claim 18, wherein the degassing system further comprises a UV light source.

25. The method of Claim 18, wherein the pump is operated in synchronization with the electroanalytical cell.

26. A method for voltammetric analysis of a liquid sample solution, comprising the steps of:

(a) introducing a liquid sample solution into a separation chamber of an electroanalytic device, wherein the electroanalytic device further comprises a degassing system and an electroanalytical cell;

(b) transferring the liquid sample solution into the degassing system;

(c) introducing an inert gas into the degassing system, wherein the inert gas contacts the liquid sample solution and provides a degassed liquid sample solution;

(d) transferring the degassed liquid sample solution from the degassing system into the separation chamber;

(e) transferring the degassed liquid sample solution from the separation chamber into a flow channel, wherein the flow channel provides fluid communication between the separation chamber and the electroanalytical cell, and wherein a working electrode is disposed within the flow channel; and

(f) making a voltammetric measurement of the degassed liquid sample solution.

LAW OFFICES OF
CHRISTENSEN O'CONNOR JOHNSON KINDNESS PLLC
1420 Fifth Avenue
Suite 2800
Seattle, Washington 98101
206.682.8100

27. The method of Claim 26, wherein the liquid sample solution contains metal ions selected from the group consisting of Cu, Pb, Cd, Ni, Co, Fe, Se, Mo, Ti, Cr, and Sn.

28. The method of Claim 26, wherein the working electrode is a dropless mercury electrode and further comprises a platinum wire for providing an electrical contact.

29. The method of Claim 26, wherein the working electrode has a potential of between + 0.3V to - 2.2V relative to a reference electrode.

30. The method of Claim 26, wherein the degassing system comprises a degassing chamber with an internal diameter of 0.2 to 2.0 millimeters.

31. The method of Claim 26, wherein the inert gas is nitrogen gas.

32. The method of Claim 26, wherein transferring the degassed liquid sample solution comprises pumping.

33. The method of Claim 26, wherein mercury is transferred from a mercury chamber into the flow channel and forms a mercury meniscus at the working electrode.

34. The method of Claim 26, wherein transfer of the degassed liquid sample solution into the flow channel and application of an accumulating potential to the working electrode causes metal ions contained in the degassed liquid sample solution to accumulate on the working electrode.

35. The method of Claim 26, wherein making a voltammetric measurement of a degassed liquid sample solution is done by scanning the working electrode.

36. The method of Claim 35, wherein after applying a measurement scan to the working electrode, the sample is transferred through the flow channel and into the mercury chamber.

LAW OFFICES OF
CHRISTENSEN O'CONNOR JOHNSON KINDNESS[PLLC]
1420 Fifth Avenue
Suite 2800
Seattle, Washington 98101
206.682.8100

37. The method of Claim 35, wherein the sample propels mercury from the working electrode into the mercury chamber.

38. The method of Claim 37, wherein the sample is transferred out of the mercury chamber and discarded through the drain valve.

Respectfully submitted,

CHRISTENSEN O'CONNOR
JOHNSON KINDNESS[PLLC]

George E. Renzoni, Ph.D.
Registration No. 37,919
Direct Dial No. 206.695.1755

GER:mjd

LAW OFFICES OF
CHRISTENSEN O'CONNOR JOHNSON KINDNESS[PLLC]
1420 Fifth Avenue
Suite 2800
Seattle, Washington 98101
206.682.8100

UNITED STATES PATENT AND TRADEMARK OFFICE

UNITED STATES DEPARTMENT OF COMMERCE
United States Patent and Trademark Office
Address: COMMISSIONER FOR PATENTS
P.O. Box 1450
Alexandria, Virginia 22313-1450
www.uspto.gov

APPLICATION NO.	FILING DATE	FIRST NAMED INVENTOR	ATTORNEY DOCKET NO.	CONFIRMATION NO.
12/862,549	08/24/2010	Vladimir Dozortsev	TRACE135462	4215

26389 7590 01/21/2011
CHRISTENSEN, O'CONNOR, JOHNSON, KINDNESS, PLLC
1420 FIFTH AVENUE
SUITE 2800
SEATTLE, WA 98101-2347

EXAMINER

ART UNIT	PAPER NUMBER
1724	

NOTIFICATION DATE	DELIVERY MODE
01/21/2011	ELECTRONIC

Please find below and/or attached an Office communication concerning this application or proceeding.

The time period for reply, if any, is set in the attached communication.

Notice of the Office communication was sent electronically on above-indicated "Notification Date" to the following e-mail address(es):

efiling@cojk.com

UNITED STATES PATENT AND TRADEMARK OFFICE

Commissioner for Patents
United States Patent and Trademark Office
P.O. Box 1450
Alexandria, VA 22313-1450
www.uspto.gov

BC

January 20, 2011

In re application of	:	DECISION ON REQUEST TO
Vladimir Dozortsev et al.	:	PARTICIPATE IN PATENT
Serial No. 12/862,549	:	PROSECUTION HIGHWAY
Filed: August 24, 2010	:	PROGRAM AND
For: VOLTAMMETRIC DEVICE HAVING	:	PETITION TO MAKE SPECIAL
SAMPLE DEGASSING SYSTEM	:	UNDER 37 CFR 1.102(a)

This is a decision on the request for reconsideration to participate in the PCT Patent Prosecution Highway (PCT-PPH) pilot program and the petition under 37 CFR 1.102(a), filed November 15, 2010, to make the above-identified application special.

The request and petition are **GRANTED**.

A grantable request to participate in the PCT-PPH pilot program and petition to make special require:

(1) The U.S. application must disclose an eligible relationship to one or more PCT applications where the ISA or IPEA are the JPO, EPO, or USPTO;

(2) At least one claim in the PCT application has novelty, inventive step, and industrial applicability and must be free of any observations in Box VIII in the latest work product in the international stage or applicant must identify and explain why the claim(s) is/are not subject to the observation in Box VIII;

(3) Applicant must submit a copy of the claim(s) from the PCT application(s) that have novelty, inventive step, and industrial applicability along with an English translation thereof and a statement that the English translation is accurate, if the claims are not in the English language;

(4) All the claims in the U.S. application must sufficiently correspond or be amended to sufficiently correspond to the claim(s) that have novelty, inventive step, and industrial applicability in the PCT application(s);

(5) Examination of the U.S. application has not begun;

(6) Applicant must submit a copy of the latest international work product from the PCT application indicating that the claim(s) have novelty, inventive step, and industrial applicability along with an English translation thereof if the latest international work

product is not in the English language; and

(7) Applicant must submit an IDS listing the documents cited by the PCT examiner in the international work product along with copies of documents except U.S. patents or U.S. patent application publications.

The request to participate in the PPH program and petition comply with the above requirements. Accordingly, the above-identified application has been accorded "special" status.

The application is currently undergoing pre-examination processing, and will be forwarded to the examiner for action on the merits upon completion of the processing.

Any inquiry regarding this decision should be directed to Blaine Copenheaver, Quality Assurance Specialist, at (571) 272-1156.

All other inquiries concerning the examination or status of the application is accessible in the PAIR system at http://www.uspto.gov/ebc/index.html.

/Blaine Copenheaver/

Blaine Copenheaver
Quality Assurance Specialist
Technology Center 1700

UNITED STATES PATENT AND TRADEMARK OFFICE

UNITED STATES DEPARTMENT OF COMMERCE
United States Patent and Trademark Office
Address: COMMISSIONER FOR PATENTS
P.O. Box 1450
Alexandria, Virginia 22313-1450
www.uspto.gov

APPLICATION NO.	FILING DATE	FIRST NAMED INVENTOR	ATTORNEY DOCKET NO.	CONFIRMATION NO.
12/862,567	08/24/2010	Hiroki USUI	Q119184	4249

EXAMINER

7590 12/09/2011
SUGHRUE MION, PLLC
2100 PENNSYLVANIA AVENUE, N.W.
SUITE 800
WASHINGTON, DC 20037

ART UNIT	PAPER NUMBER
1725	

NOTIFICATION DATE	DELIVERY MODE
12/09/2011	ELECTRONIC

DECISION GRANTING PETITION UNDER 37 CFR 1.138(d)

The declaration of express abandonment is recognized

This is in response to the petition under 37 CFR 1.138(d), requesting for a refund of any previously paid search fee and excess claims fee in the above-identified application.

The petition is granted.

The express abandonment is recognized. Any previously paid search fee and excess claims fee are hereby refunded.

Telephone inquiries should be directed to the Office of Data Management at (571) 272-4200.

Patent Publication Branch
Office of Data Management

FORM PET651G (Rev. 08/07)

UNITED STATES PATENT AND TRADEMARK OFFICE

UNITED STATES DEPARTMENT OF COMMERCE
United States Patent and Trademark Office
Address: COMMISSIONER FOR PATENTS
P.O. Box 1450
Alexandria, Virginia 22313-1450
www.uspto.gov

APPLICATION NO.	FILING DATE	FIRST NAMED INVENTOR	ATTORNEY DOCKET NO.	CONFIRMATION NO.
12/862,578	08/24/2010	Nigel Pearce	50407-00017	4269

25231 7590 11/03/2010
MARSH, FISCHMANN & BREYFOGLE LLP
8055 East Tufts Avenue
Suite 450
Denver, CO 80237

EXAMINER

ART UNIT	PAPER NUMBER
2172	

MAIL DATE	DELIVERY MODE
11/03/2010	PAPER

Please find below and/or attached an Office communication concerning this application or proceeding.

The time period for reply, if any, is set in the attached communication.

UNITED STATES PATENT AND TRADEMARK OFFICE

Commissioner for Patents
United States Patent and Trademark Office
P.O. Box 1450
Alexandria, VA 22313-1450
www.uspto.gov

MARSH, FISCHMANN & BREYFOGLE LLP
8055 East Tufts Avenue
Suite 450
Denver CO 80237

In re Application of: PEARCE et al.
Application No. 12/862,578
Attorney Docket #: 50407-0017
Filed: August 24, 2010
For: **Join Objects**

DECISION ON REQUEST TO PARTICIPATE IN PATENT PROSECUTION HIGHWAY PROGRAM AND PETITION TO MAKE SPECIAL UNDER 37 CFR 1.102(a)

This is a decision on the request to participate in the Patent Prosecution Highway (PPH) program and the petition under 37 CFR 1.102(a), filed September 15, 2010 to make the above-identified application special.

The petition is **DISMISSED.**

A grantable request to participate in the PPH program and petition to make special require:

(1) The U.S. application is
(a) a Paris Convention application which either
(i) validly claims priority under 35 U.S.C. 119(a) and 37 CFR 1.55 to one or more applications filed in the UK IPO, or
(ii) validly claims priority to a PCT application that contains no priority claims,

Or

(b) a national stage application under the PCT (an application which entered the national stage in the U.S. from a PCT international application after compliance with 35 U.S.C. 371), which PCT application
(i) validly claims priority to an application filed in the UK IPO, or
(ii) validly claims priority to a PCT application that contains no priority claims, or
(iii) contains no priority claim,

Or

(c) a so-called bypass application filed under 35 U.S.C. 111 (a) which validly claims benefit under 35 U.S.C. 120 to a PCT application, which PCT application
(i) validly claims priority to an application filed in the UK IPO, or
(ii) validly claims priority to a PCT application that contains no priority claims, or
(iii) contains no priority claim.

(2) Applicant must submit a copy of:
a. The allowable/patentable claim(s) from the UK IPO application(s)

(3) Applicant must:
a. Ensure all the claims in the U.S. application must sufficiently correspond or be amended to sufficiently correspond to the allowable/patentable claim(s) in the UK IPO application(s) and
b. Submit a claims correspondence table in English;

(4) Examination of the U.S. application has not begun;

(5) Applicant must submit:
a. Documentation of prior office action:
i. a copy of ALL the office action(s)just prior to the "Decision to Grant a Patent" from each of the UK IPO application(s) containing the allowable/patentable claim(s)

(6) Applicant must submit:
a. An IDS listing the documents cited by the UK IPO examiner in the UK IPO office action (unless already submitted in this application)
b. Copies of the documents except U.S. patents or U.S. patent application publications (unless already submitted in this application);

The request to participate in the PPH pilot program and petition fail to comply with the above requirements.

In particular:

Item 3:
The claims do not correspond. In particular, there is no correspondence to an allowable claim in the UK IPO application for claims 4 and 8 of the instant US application.

Accordingly, the petition is **DISMISSED.**

Applicant is given a time period of ONE MONTH or THIRTY DAYS, whichever is longer, to correct the deficiencies. NO EXTENSION OF TIME UNDER 37 CFR 1.136 IS PERMITTED.

If the deficiencies are not corrected with the time period given, the application will await action in its regular turn.

Response must submitted by EFS-Web using the document description "Petition to make special under Pat Pros Hwy".

Telephone inquiries concerning this decision should be directed to Mano Padmanabhan at 571-272-4210.

All other inquiries concerning the examination or status of the application should be directed to Patent Application Information Retrieval (PAIR) system.

/Mano Padmanabhan/

Mano Padmanabhan
Quality Assurance Specialist, Technology Center 2100, Workgroup 2180
571-272-4210

UNITED STATES PATENT AND TRADEMARK OFFICE

UNITED STATES DEPARTMENT OF COMMERCE
United States Patent and Trademark Office
Address: COMMISSIONER FOR PATENTS
P.O. Box 1450
Alexandria, Virginia 22313-1450
www.uspto.gov

APPLICATION NO.	FILING DATE	FIRST NAMED INVENTOR	ATTORNEY DOCKET NO.	CONFIRMATION NO.
12/862,578	08/24/2010	Nigel Pearce	50407-00017	4269

25231 7590 12/28/2010
MARSH, FISCHMANN & BREYFOGLE LLP
8055 East Tufts Avenue
Suite 450
Denver, CO 80237

EXAMINER

ART UNIT	PAPER NUMBER
2172	

MAIL DATE	DELIVERY MODE
12/28/2010	PAPER

Please find below and/or attached an Office communication concerning this application or proceeding.

The time period for reply, if any, is set in the attached communication.

UNITED STATES PATENT AND TRADEMARK OFFICE

Commissioner for Patents
United States Patent and Trademark Office
P.O. Box 1450
Alexandria, VA 22313-1450
www.uspto.gov

MARSH, FISCHMANN & BREYFOGLE LLP
8055 East Tufts Avenue
Suite 450
Denver CO 80237

In re Application of: PEARCE et al.
Application No. 12/862,578
Attorney Docket #: 50407-0017
Filed: August 24, 2010
For: **Join Objects**

DECISION ON REQUEST TO PARTICIPATE IN PATENT PROSECUTION HIGHWAY PROGRAM AND PETITION TO MAKE SPECIAL UNDER 37 CFR 1.102(a)

This is a decision on the renewed request to participate in the Patent Prosecution Highway (PPH) program and the petition under 37 CFR 1.102(a), filed November 30, 2010 to make the above-identified application special.

The petition is **DENIED.**

A grantable request to participate in the PPH program and petition to make special require:

(1) The U.S. application is
(a) a Paris Convention application which either
(i) validly claims priority under 35 U.S.C. 119(a) and 37 CFR 1.55 to one or more applications filed in the UK IPO, or
(ii) validly claims priority to a PCT application that contains no priority claims,

Or

(b) a national stage application under the PCT (an application which entered the national stage in the U.S. from a PCT international application after compliance with 35 U.S.C. 371), which PCT application
(i) validly claims priority to an application filed in the UK IPO, or
(ii) validly claims priority to a PCT application that contains no priority claims, or
(iii) contains no priority claim,

Or

(c) a so-called bypass application filed under 35 U.S.C. 111 (a) which validly claims benefit under 35 U.S.C. 120 to a PCT application, which PCT application
(i) validly claims priority to an application filed in the UK IPO, or

(ii) validly claims priority to a PCT application that contains no priority claims, or
(iii) contains no priority claim.

(2) Applicant must submit a copy of:
a. The allowable/patentable claim(s) from the UK IPO application(s)

(3) Applicant must:
a. Ensure all the claims in the U.S. application must sufficiently correspond or be amended to sufficiently correspond to the allowable/patentable claim(s) in the UK IPO application(s) and
b. Submit a claims correspondence table in English;

(4) Examination of the U.S. application has not begun;

(5) Applicant must submit:
a. Documentation of prior office action:
i. a copy of ALL the office action(s)just prior to the "Decision to Grant a Patent" from each of the UK IPO application(s) containing the allowable/patentable claim(s)

(6) Applicant must submit:
a. An IDS listing the documents cited by the UK IPO examiner in the UK IPO office action (unless already submitted in this application)
b. Copies of the documents except U.S. patents or U.S. patent application publications (unless already submitted in this application);

The request to participate in the PPH pilot program and petition fail to comply with the above requirements.

In particular:
The original petition filed on September 15, 2010 was dismissed because of:
Item 3:
The claims do not correspond. In particular, there is no correspondence to an allowable claim in the UK IPO application for claims 4 and 8 of the instant US application.

In response, Applicant cancelled claims 4 and 8 in the amendment filed on 11/30/2010, but added them back as new claims 9 and 10 in the amendment filed on December 14, 2010. Therefore the new claims 9 and 10 do not have a corresponding allowed claim in the UK application.

Accordingly, the petition is **DENIED.**

The application will therefore be taken up by the examiner for action in its regular turn.

Telephone inquiries concerning this decision should be directed to Mano Padmanabhan at 571-272-4210.

All other inquiries concerning the examination or status of the application should be directed to Patent Application Information Retrieval (PAIR) system.

/Mano Padmanabhan/

Mano Padmanabhan
Quality Assurance Specialist, Technology Center 2100, Workgroup 2180
571-272-4210

PTO/SB/20PCT-KR (06-10)
Approved for use through 01/31/2012. OMB 0651-0058
U.S. Patent and Trademark Office; U. S. DEPARTMENT OF COMMERCE
Under the Paperwork Reduction Act of 1995, no persons are required to respond to a collection of information unless it displays a valid OMB control number.

REQUEST FOR PARTICIPATION IN THE PATENT COOPERATION TREATY - PATENT PROSECUTION HIGHWAY (PCT-PPH) PILOT PROGRAM BETWEEN THE KOREAN INTELLECTUAL PROPERTY OFFICE (KIPO) AND THE USPTO

Application No:	12/862,584	Filing date:	August 24, 2010
First Named Inventor:	McGinnis		
Title of the Invention:	Forward Osmosis Membranes		

THIS REQUEST FOR PARTICIPATION IN THE PCT-PPH PILOT PROGRAM ALONG WITH THE REQUIRED DOCUMENTS MUST BE SUBMITTED VIA EFS-WEB. INFORMATION REGARDING EFS-WEB IS AVAILABLE AT HTTP://WWW.USPTO.GOV/EBC/EFS_HELP.HTML

APPLICANT HEREBY REQUESTS PARTICIPATION IN THE PCT-PPH PROGRAM AND PETITIONS TO MAKE THE ABOVE-IDENTIFIED APPLICATION SPECIAL UNDER THE PCT-PPH PROGRAM.

The above-identified application is (1) a national stage entry of the corresponding PCT application, or (2) a national stage entry of another PCT application which claims priority to the corresponding PCT application, or (3) a national application that claims domestic/ foreign priority to the corresponding PCT application, or (4) a national application which forms the basis for the priority claim in the corresponding PCT application, or (5) a continuing application of a U.S. application that satisfies one of (1) to (4) above, or (6) a U.S. application that claims domestic benefit to a U.S. provisional application which forms the basis for the priority claim in the corresponding PCT application.

The corresponding PCT application number(s) is/are: PCT/US2010/046521

The international filing date of the corresponding PCT application(s) is/are: August 24, 2010

I. List of Required Documents:

a. **A copy of the latest international work product (WO/ISA, WO/IPEA, or IPER) in the above–identified corresponding PCT application(s)**

☑ Is attached.

☐ Is not attached because the document is already in the U.S. application.

b. **A copy of all claims which were indicated as having novelty, inventive step and industrial applicability in the above-identified corresponding PCT application(s).**

☑ Is attached.

☐ Is not attached because the document is already in the U.S. application.

c. **English translations of the documents in a. and b. above are attached (if the documents are not in the English language). A statement that the English translation is accurate is attached for the document in b. above.**

This collection of information is required by 35 U.S.C. 119, 37 CFR 1.55, and 37 CFR 1.102(e). The information is required to obtain or retain a benefit by the public, which is to file (and by the USPTO to process) an application. Confidentiality is governed by 35 U.S.C. 122 and 37 CFR 1.11 and 1.14. This collection is estimated to take 2 hours to complete, including gathering, preparing, and submitting the completed application form to the USPTO. Time will vary depending upon the individual case. Any comments on the amount of time you require to complete this form and/or suggestions for reducing this burden should be sent to the Chief Information Officer, U.S. Patent and Trademark Office, U.S. Department of Commerce, P.O. Box 1450, Alexandria, VA 22313-1450. DO NOT SEND FEES OR COMPLETED FORMS TO THIS ADDRESS.

Approved for use through 01/31/2012. OMB 0651-0058
U.S.Patent and Trademark Office; U.S. DEPARTMENT OF COMMERCE

Under the Paperwork Reduction Act of 1995, no persons are required to respond to a collection of information unless it displays a valid OMB control number.

REQUEST FOR PARTICIPATION IN THE PCT-PPH PILOT PROGRAM BETWEEN THE KIPO AND THE USPTO

(continued)

Application No.:	12/862,584
First Named Inventor:	McGinnis

d. **(1) An information disclosure statement listing the documents cited in the international work products (ISR, WO/ISA, WO/IPEA, IPER) of the corresponding PCT application.**

☐ Is attached

☑ Has already been filed in the above-identified U.S. application on June 20, 2011

(2) Copies of all documents (except) for U.S. patents or U.S. patent application publications)

☐ Are attached.

☐ Have already been filed in the above-identified U.S. application on _____

II. Claims Correspondence Table:

Claims in US Application	Patentable Claims in the corresponding PCT Application	Explanation regarding the correspondence
1-16	1-16	Same claims
17	17	Substantially identical, amended to correct dependency
24	1	Substantially identical, includes novel and inventive features of clam 1

III. All the claims in the US application sufficiently correspond to the patentable claims in the corresponding PCT application.

Signature /Nicole A. Palmer/	Date August 2, 2011
Name (Print/Typed) Nicole A. Palmer	Registration Number 58,943

Privacy Act Statement

The **Privacy Act of 1974 (P.L. 93-579)** requires that you be given certain information in connection with your submission of the attached form related to a patent application or patent. Accordingly, pursuant to the requirements of the Act, please be advised that: (1) the general authority for the collection of this information is 35 U.S.C. 2(b)(2); (2) furnishing of the information solicited is voluntary; and (3) the principal purpose for which the information is used by the U.S. Patent and Trademark Office is to process and/or examine your submission related to a patent application or patent. If you do not furnish the requested information, the U.S. Patent and Trademark Office may not be able to process and/or examine your submission, which may result in termination of proceedings or abandonment of the application or expiration of the patent.

The information provided by you in this form will be subject to the following routine uses:

1. The information on this form will be treated confidentially to the extent allowed under the Freedom of Information Act (5 U.S.C. 552) and the Privacy Act (5 U.S.C 552a). Records from this system of records may be disclosed to the Department of Justice to determine whether disclosure of these records is required by the Freedom of Information Act.
2. A record from this system of records may be disclosed, as a routine use, in the course of presenting evidence to a court, magistrate, or administrative tribunal, including disclosures to opposing counsel in the course of settlement negotiations.
3. A record in this system of records may be disclosed, as a routine use, to a Member of Congress submitting a request involving an individual, to whom the record pertains, when the individual has requested assistance from the Member with respect to the subject matter of the record.
4. A record in this system of records may be disclosed, as a routine use, to a contractor of the Agency having need for the information in order to perform a contract. Recipients of information shall be required to comply with the requirements of the Privacy Act of 1974, as amended, pursuant to 5 U.S.C. 552a(m).
5. A record related to an International Application filed under the Patent Cooperation Treaty in this system of records may be disclosed, as a routine use, to the International Bureau of the World Intellectual Property Organization, pursuant to the Patent Cooperation Treaty.
6. A record in this system of records may be disclosed, as a routine use, to another federal agency for purposes of National Security review (35 U.S.C. 181) and for review pursuant to the Atomic Energy Act (42 U.S.C. 218(c)).
7. A record from this system of records may be disclosed, as a routine use, to the Administrator, General Services, or his/her designee, during an inspection of records conducted by GSA as part of that agency's responsibility to recommend improvements in records management practices and programs, under authority of 44 U.S.C. 2904 and 2906. Such disclosure shall be made in accordance with the GSA regulations governing inspection of records for this purpose, and any other relevant (*i.e.*, GSA or Commerce) directive. Such disclosure shall not be used to make determinations about individuals.
8. A record from this system of records may be disclosed, as a routine use, to the public after either publication of the application pursuant to 35 U.S.C. 122(b) or issuance of a patent pursuant to 35 U.S.C. 151. Further, a record may be disclosed, subject to the limitations of 37 CFR 1.14, as a routine use, to the public if the record was filed in an application which became abandoned or in which the proceedings were terminated and which application is referenced by either a published application, an application open to public inspection or an issued patent.
9. A record from this system of records may be disclosed, as a routine use, to a Federal, State, or local law enforcement agency, if the USPTO becomes aware of a violation or potential violation of law or regulation.

PATENT COOPERATION TREATY

From the INTERNATIONAL SEARCHING AUTHORITY

To:

PALMER NICOLE A.

LANDO & ANASTASI, LLP. ONE MAIN STREET
ELEVENTH FLOOR CAMBRIDGE MA 02142 USA

PCT

NOTIFICATION OF TRANSMITTAL OF THE INTERNATIONAL SEARCH REPORT AND THE WRITTEN OPINION OF THE INTERNATIONAL SEARCHING AUTHORITY, OR THE DECLARATION

(PCT Rule 44.1)

Date of mailing *(day/month/year)* 29 APRIL 2011 (29.04.2011)

Applicant's or agent's file reference
O2008-7015WO

FOR FURTHER ACTION See paragraphs 1 and 4 below

International application No.
PCT/US2010/046521

International filing date *(day/month/year)*
24 AUGUST 2010 (24.08.2010)

Applicant
OASYS WATER, INC. et al

1. ☒ The applicant is hereby notified that the international search report and the written opinion of the International Searching Authority have been established and are transmitted herewith.
Filing of amendments and statement under Article 19:
The applicant is entitled, if he so wishes, to amend the claims of the international application (see Rule 46):
When? The time limit for filing such amendments is normally two months from the date of transmittal of the international search report.
Where? Directly to the International Bureau of WIPO, 34 chemin des Colombettes 1211 Geneva 20, Switzerland, Facsimile No.: +41 22 338 82 70
For more detailed instructions, see *PCT Applicant's Guide*, International Phase, paragraphs 9.004 . 9.011.

2. ☐ The applicant is hereby notified that no international search report will be established and that the declaration under Article 17(2)(a) to that effect and the written opinion of the International Searching Authority are transmitted herewith.

3. ☐ **With regard to any protest** against payment of (an) additional fee(s) under Rule 40.2, the applicant is notified that:
☐ the protest together with the decision thereon has been transmitted to the International Bureau together with any request to forward the texts of both the protest and the decision thereon to the designated Offices.
☐ no decision has been made yet on the protest; the applicant will be notified as soon as a decision is made.

4. **Reminders**
The applicant may submit comments on an informal basis on the written opinion of the International Searching Authority to the International Bureau. The International Bureau will send a copy of such comments to all designated Offices unless an international preliminary examination report has been or is to be established. Following the expiration of 30 months from the priority date, these comments will also be made available to the public.

Shortly after the expiration of **18 months** from the priority date, the international application will be published by the International Bureau. If the applicant wishes to avoid or postpone publication, a notice of withdrawal of the international application, or of the priority claim, must reach the International Bureau before the completion of the technical preparations for international publication (Rules 90bis.1 and 90bis.3).

Within **19 months** from the priority date, but only in respect of some designated Offices, a demand for international preliminary examination must be filed if the applicant wishes to postpone the entry into the national phase **until 30 months** from the priority date (in some Offices even later); otherwise, the applicant must, **within 20 months** from the priority date, perform the prescribed acts for entry into the national phase before those designated Offices.
In respect of other designated Offices, the time limit of **30 months** (or later) will apply even if no demand is filed within 19months.

For details about the applicable time limits, Office by Office, see www.wipo.int/pct/en/texts/time_limits.html and the PCT Applicant's Guide, National Chapters.

Name and mailing address of the ISA/KR
Korean Intellectual Property Office
Government Complex-Daejeon, 189 Cheongsa-ro, Seo-gu, Daejeon 302-701, Republic of Korea
Facsimile No. 82-42-472-7140

Authorized officer
COMMISSIONER
Telephone No. 82-42-481-8754

* Attention

Copies of the documents cited in the international search report can be searched in the following Korean Intellectual Property Office English website for three months from the date of mailing of the international search report.

http://www.kipo.go.kr/en/ => PCT Services => PCT Services

ID : PCT international application number
PW : **R3SHFNS8**

Inquiries related to PCT International Search Report or Written Opinion prepared by KIPO as an International Searching Authority can be answered not only by KIPO but also through IPKC (Intellectual Property Korea Center), located in Vienna, VA, which functions as a PCT Help Desk for PCT applicants.

Homepage: http://www.ipkcenter.com
Email: ipkc@ipkcenter.com
Phone: +1 703 388 1066
Fax: +1 703 388 1084

PATENT COOPERATION TREATY

PCT

INTERNATIONAL SEARCH REPORT

(PCT Article 18 and Rules 43 and 44)

Applicant's or agent's file reference O2008-7015WO	FOR FURTHER ACTION	see Form PCT/ISA/220 as well as, where applicable, item 5 below.
International application No. **PCT/US2010/046521**	International filing date *(day/month/year)* **24 AUGUST 2010 (24.08.2010)**	(Earliest) Priority Date *(day/month/year)* 24 AUGUST 2009 (24.08.2009)
Applicant **OASYS WATER, INC. et al**		

This International search report has been prepared by this International Searching Authority and is transmitted to the applicant according to Article 18. A copy is being transmitted to the International Bureau.

This international search report consists of a total of 3 sheets.

☐ It is also accompanied by a copy of each prior art document cited in this report.

1. **Basis of the report**
   a. With regard to the **language**, the international search was carried out on the basis of:
      ☒ the international application in the language in which it was filed
      ☐ a translation of the international application into _____, which is the language of a translation furnished for the purposes of international search (Rules 12.3(a) and 23.1(b))
   b. ☐ This international search report has been established taking into account the **rectification of an obvious mistake** authorized by or notified to this Authority under Rule 91 (Rule 43.6*bis*(a)).
   c. ☐ With regard to any **nucleotide and/or amino acid sequence** disclosed in the international application, see Box No. I.
2. ☐ **Certain claims were found unsearchable** (See Box No. II)
3. ☐ **Unity of invention is lacking** (See Box No. III)
4. With regard to the **title**,
   ☒ the text is approved as submitted by the applicant.
   ☐ the text has been established by this Authority to read as follows:
5. With regard to the **abstract**,
   ☒ the text is approved as submitted by the applicant.
   ☐ the text has been established, according to Rule 38.2, by this Authority as it appears in Box No. IV. The applicant may, within one month from the date of mailing of this international search report, submit comments to this Authority.
6. With regard to the drawings,
   a. the figure of the **drawings** to be published with the abstract is Figure No. 4
      ☒ as suggested by the applicant.
      ☐ as selected by this Authority, because the applicant failed to suggest a figure.
      ☐ as selected by this Authority, because this figure better characterizes the invention.
   b. ☐ none of the figure is to be published with the abstract.

INTERNATIONAL SEARCH REPORT

International application No.
PCT/US2010/046521

A. CLASSIFICATION OF SUBJECT MATTER

B01D 69/10(2006.01)i, B01D 67/00(2006.01)i, B01D 71/00(2006.01)i, B01D 61/00(2006.01)i, C02F 1/44(2006.01)i

According to International Patent Classification (IPC) or to both national classification and IPC

B. FIELDS SEARCHED

Minimum documentation searched (classification system followed by classification symbols)

B01D 69/10; B01D 39/00; B01D 71/10; B01D 29/05; B01D 63/10; B01D 61/00; B01D 61/02

Documentation searched other than minimum documentation to the extent that such documents are included in the fields searched

Korean utility models and applications for utility models
Japanese utility models and applications for utility models

Electronic data base consulted during the international search (name of data base and, where practicable, search terms used)

eKOMPASS(KIPO internal) & Keywords: osmosis, membrane, support, barrier, separate

C. DOCUMENTS CONSIDERED TO BE RELEVANT

Category*	Citation of document, with indication, where appropriate, of the relevant passages	Relevant to claim No.
X A	US 2007-0251883 A1 (Q. JASON NIU) 01 November 2007 See paragraphs [0005]-[0008] and figures 1,2	18-23 1-17
A	US 2005-0006301 A1 (ANGELINI PETER J. et al.) 13 January 2005 See paragraphs [0024],[0052] and [0063]	1-17
A	US 2006-0226067 A1 (HERRON) 12 October 2006 See paragraphs [0011]-[0015]	1-23
A	US 2006-0043013 A1 (HIRO et al.) 02 March 2006 See paragraph [0056] and claim 1	1-17
A	US 2005-0077243 A1 (INGO PINNAU et al.) 14 April 2005 See paragraphs [0061]-[0064]	1-17

☐ Further documents are listed in the continuation of Box C. ☒ See patent family annex.

* Special categories of cited documents:
"A" document defining the general state of the art which is not considered to be of particular relevance
"E" earlier application or patent but published on or after the international filing date
"L" document which may throw doubts on priority claim(s) or which is cited to establish the publication date of citation or other special reason (as specified)
"O" document referring to an oral disclosure, use, exhibition or other means
"P" document published prior to the international filing date but later than the priority date claimed
"T" later document published after the international filing date or priority date and not in conflict with the application but cited to understand the principle or theory underlying the invention
"X" document of particular relevance; the claimed invention cannot be considered novel or cannot be considered to involve an inventive step when the document is taken alone
"Y" document of particular relevance; the claimed invention cannot be considered to involve an inventive step when the document is combined with one or more other such documents,such combination being obvious to a person skilled in the art
"&" document member of the same patent family

Date of the actual completion of the international search	Date of mailing of the international search report
29 APRIL 2011 (29.04.2011)	**29 APRIL 2011 (29.04.2011)**
Name and mailing address of the ISA/KR Korean Intellectual Property Office Government Complex-Daejeon, 189 Cheongsa-ro, Seo-gu, Daejeon 302-701, Republic of Korea Facsimile No. 82-42-472-7140	Authorized officer JANG, Sung Won Telephone No. 82-42-481-8717

Form PCT/ISA/210 (second sheet) (July 2009)

INTERNATIONAL SEARCH REPORT

Information on patent family members

International application No.
PCT/US2010/046521

Patent document cited in search report	Publication date	Patent family member(s)	Publication date
US 2007-0251883 A1	01.11.2007	CN 101432058 A	13.05.2009
		EP 2021107 A2	11.02.2009
		JP 2009-535201 A	01.10.2009
		JP 2009-535201 T	01.10.2009
		KR 10-2009-0006130 A	14.01.2009
		KR20090006130A	14.01.2009
		US 2009-220690 A1	03.09.2009
		WO 2007-127605 A2	08.11.2007
		WO 2007-127605 A3	24.01.2008
		WO 2007-127605 A3	08.11.2007
US 2005-0006301 A1	13.01.2005	CN 1819866 A	16.08.2006
		CN 1819866 B	05.05.2010
		CN 1819866 C	05.05.2010
		CN 1819866 C0	16.08.2006
		EP 1656197 A1	17.05.2006
		KR 10-0809566 B1	04.03.2008
		KR20060063877A	12.06.2006
		US 2006-0151094 A1	13.07.2006
		US 7051883 B2	30.05.2006
		US 7470639 B2	30.12.2008
		WO 2005-007275 A1	27.01.2005
US 2006-0226067 A1	12.10.2006	US 7445712 B2	04.11.2008
		WO 2006-110497 A2	19.10.2006
		WO 2006-110497 A3	25.10.2007
		WO 2006-110497 A3	19.10.2006
US 2006-0043013 A1	02.03.2006	EP 1637214 A1	22.03.2006
		JP 04-484635 B2	02.04.2010
		JP 2006-068644 A	16.03.2006
		JP 4484635 B2	16.06.2010
		KR 10-0809178 B1	29.02.2008
		KR20060050930A	19.05.2006
		US 2008-0295951 A1	04.12.2008
US 2005-0077243 A1	14.04.2005	US 7490725 B2	17.02.2009

PATENT COOPERATION TREATY

From the
INTERNATIONAL SEARCHING AUTHORITY

To:
PALMER NICOLE A.

LANDO & ANASTASI, LLP. ONE MAIN STREET
ELEVENTH FLOOR CAMBRIDGE MA 02142 USA

PCT

WRITTEN OPINION OF THE INTERNATIONAL SEARCHING AUTHORITY

(PCT Rule 43bis.1)

Date of mailing *(day/month/year)* **29 APRIL 2011 (29.04.2011)**

Applicant's or agent's file reference
O2008-7015WO

FOR FURTHER ACTION
See paragraph 2 below

International application No.	International filing date *(day/month/year)*	Priority date *(day/month/year)*
PCT/US2010/046521	**24 AUGUST 2010 (24.08.2010)**	24 AUGUST 2009 (24.08.2009)

International Patent Classification (IPC) or both national classification and IPC

B01D 69/10(2006.01)i, B01D 67/00(2006.01)i, B01D 71/00(2006.01)i, B01D 61/00(2006.01)i, C02F 1/44(2006.01)i

Applicant

OASYS WATER, INC. et al

1. This opinion contains indications relating to the following items:

- [x] Box No. I Basis of the opinion
- [ ] Box No. II Priority
- [ ] Box No. III Non-establishment of opinion with regard to novelty, inventive step and industrial applicability
- [ ] Box No. IV Lack of unity of invention
- [x] Box No. V Reasoned statement under Rule 43bis.1(a)(i) with regard to novelty, inventive step or industrial applicability; citations and explanations supporting such statement
- [ ] Box No. VI Certain documents cited
- [ ] Box No. VII Certain defects in the international application
- [ ] Box No. VIII Certain observations on the international application

2. **FURTHER ACTION**
If a demand for international preliminary examination is made, this opinion will be considered to be a written opinion of the International Preliminary Examining Authority ("IPEA") except that this does not apply where the applicant chooses an Authority other than this one to be the IPEA and the chosen IPEA has notified the International Bureau under Rule 66.1bis(b) that written opinions of this International Searching Authority will not be so considered.

If this opinion is, as provided above, considered to be a written opinion of the IPEA, the applicant is invited to submit to the IPEA a written reply together, where appropriate, with amendments, before the expiration of 3 months from the date of mailing of Form PCT/ISA/220 or before the expiration of 22 months from the priority date, whichever expires later.
For further options, see Form PCT/ISA/220.

3. For further details, see notes to Form PCT/ISA/220.

Name and mailing address of the ISA/KR	Date of completion of this opinion	Authorized officer
Korean Intellectual Property Office Government Complex-Daejeon, 189 Cheongsa-ro, Seo-gu, Daejeon 302-701, Republic of Korea Facsimile No. 82-42-472-7140	29 APRIL 2011 (29.04.2011)	JANG, Sung Won Telephone No.82-42-481-8717

WRITTEN OPINION OF THE INTERNATIONAL SEARCHING AUTHORITY

International application No.
PCT/US2010/046521

Box No. I Basis of this opinion

1. With regard to the **language**, this opinion has been established on the basis of :

   ☒ the international application in the language in which it was filed

   ☐ a translation of the international application into _____ , which is the language of a translation furnished for the purposes of international search (Rules 12.3(a) and 23.1(b))

2. ☐ This opinion has been established taking into account the **rectification of an obvious mistake** authorized by or notified to this Authority under Rule 91 (Rule 43*bis*.1(a))

3. With regard to any **nucleotide and/or amino acid sequence** disclosed in the international application, this opinion has been established on the basis of:

   a. a sequence listing filed or furnished
      ☐ on paper
      ☐ in electronic form

   b. time of filing or furnishing
      ☐ contained in the international application as filed.
      ☐ filed together with the international application in electronic form.
      ☐ furnished subsequently to this Authority for the purposes of search.

4. ☐ In addition, in the case that more than one version or copy of a sequence listing has been filed or furnished, the required statements that the information in the subsequent or additioanl copies is identical to that in the application as filed or does not go beyond the application as filed, as appropriate, were furnished.

5. Additional comments:

WRITTEN OPINION OF THE INTERNATIONAL SEARCHING AUTHORITY

International application No.
PCT/US2010/046521

Box No. V Reasoned statement under Rule 43bis.1(a)(i) with regard to novelty, inventive step or industrial applicability; citations and explanations supporting such statement

1. Statement

Novelty (N)	Claims	1-23	YES
	Claims	NONE	NO
Inventive step (IS)	Claims	1-17	YES
	Claims	18-23	NO
Industrial applicability (IA)	Claims	1-23	YES
	Claims	NONE	NO

2. Citations and explanations :

Reference is made to the following documents:

D1: US 2007-0251883 A1 (Q. JASON NIU) 01 November 2007
D2: US 2005-0006301 A1 (ANGELINI PETER J. et al.) 13 January 2005
D3: US 2006-0226067 A1 (HERRON) 12 October 2006
D4: US 2006-0043013 A1 (HIRO et al.) 02 March 2006
D5: US 2005-0077243 A1 (INGO PINNAU et al.) 14 April 2005

1. Novelty and Inventive Step

1.1 Claims 1 and 15

The subject matter of claims 1 and 15 differs from these prior art documents in that the forward osmosis membrane is released by separating the first layer of the support structure from the second layer of the support structure. It is not obvious to a person skilled in the art by the documents, taken alone or in combination. Therefore, claims 1 and 15 meet the requirements of PCT Article 33(2) and (3) with respect to novelty and inventive step.

1.2 Claims 2-14 and 16-17
Claims 2-14 and 16-17 are dependent on claim 1 and 16 respectively and therefore meet the requirements of PCT Article 33(2) and (3).

1.3 Claim 18
D1, which is considered to be the closest prior art to the subject matter of claim 18, discloses a schematic of a thin film composite membrane in a spiral wound configuration wherein the membrane comprises an ultra-thin barrier layer, the second or middle layer and the third or bottom layer(see paragraphs [0005]-[0008] and Fig. 2). The subject matter of claim 18 differs from D1 in that the membrane is configured for a forward osmosis separation operation and the support structure may provide a spacer or a flow channel for a draw solution. However, providing a flow channel by the support structure is virtually suggested in D1(see Fig.2) and facilitating a forward osmosis operation is considered to be a minor variation of the reverse osmosis in D1 that falls under the general knowledge of a person skilled in the art. Accordingly, claim 18 would have been obvious over D1. Therefore, claim 18 lacks an inventive step under PCT Article 33(3).

1.4 Claims 19-20
The additional features of claims 19-20 which are dependent on claim 18 are disclosed in D1 or considered to be minor differences over the disclosure of D1 that fall under the general knowledge of a person skilled in the art. Therefore, claims 19-20 lack an inventive step under PCT Article 33(3).

1.5 Claim 21
D1, which is considered to be the closest prior art to the subject matter of claim 21, discloses a
Continued on Supplemental Box

Supplemental Box

In case the space in any of the preceding boxes is not sufficient.
Continuation of:

Box V

reverse osmosis membrane including an ultra-thin barrier layer comprising a crosslinked polyamide of 10-100 nm the second or middle layer of about 40 microns and the third or bottom layer of about 120 microns(see paragraphs [0005]-[0008] and Fig. 1). The subject matter of claim 21 differs from D1 in the thickness of the layers. However, this feature is a minor variation of the disclosure of D1 and a person skilled in the art would arrive at the claimed invention by general experimentation alone without exercising any ingenuity. Therefore, claim 21 lacks an inventive step under PCT Article 33(3).

1.6 Claims 22-23
The additional features of claims 22-23 which are dependent on claim 21 are disclosed in D1 or considered to be minor differences over the disclosure of D1 that fall under the general knowledge of a person skilled in the art. Therefore, claims 22-23 lack an inventive step under PCT Article 33(3).

2. Industrial Applicability

Claims 1-23 are industrially applicable under PCT Article 33(4).

O2008-701510
PCT-PPH PARTICIPATION REQUEST

LISTING OF CLAIMS INDICATED AS HAVING NOVELTY, INVENTIVE STEP AND INDUSTRIAL APPLICABILITY IN CORRESPONDING PCT APPLICATION (PCT/US2010/046521)

1. A method of making a forward osmosis membrane, comprising:

providing a support structure including at least a first layer and a second layer;

applying a material to a first layer of the support structure to form a membrane support layer;

applying a barrier material to the membrane support layer to form the forward osmosis membrane; and

releasing the forward osmosis membrane by separating the first layer of the support structure from the second layer of the support structure.

2. The method of claim 1, wherein the support structure comprises a bilayer structure.

3. The method of claim 1, wherein the first layer of the support structure has a Frazier air permeability of greater than about 50 cfm/ft^{2}min.

4. The method of claim 1, wherein the material applied to the first layer of the support structure is applied in a coating of between about 5 and 20 g/m^2.

5. The method of claim 1, wherein the forward osmosis membrane has an overall thickness of less than about 125 microns.

6. The method of claim 1, wherein the barrier material comprises a semipermeable material.

7. The method of claim 6, wherein the barrier material comprises a polymer.

8. The method of claim 7, wherein the barrier material comprises a polyamide urea, polypiperazine, or a block co-polymer.

9. The method of claim 1, wherein the support structure comprises a polymeric paper.

10. The method of claim 9, wherein the support structure comprises PET or polypropylene.

11. The method of claim 1, further comprising rewetting the forward osmosis membrane.

12. The method of claim 1, further comprising adding an additive to one or more layers of the membrane.

13. The method of claim 1, wherein the step of releasing the forward osmosis membrane by separating the first and second layers of the support structure comprises modifying a pore structure in at least a section of the forward osmosis membrane.

14. The method of claim 1, further comprising reusing the second layer of the support structure.

15. A method of making a forward osmosis membrane, comprising:

casting a paperless support structure on a fabrication belt or drum;

depositing a barrier material on the paperless support structure; and

delaminating the paperless support structure from the fabrication belt to form the forward osmosis membrane.

16. The method of claim 15, wherein the belt or drum is constructed and arranged to provide a surface which retains a portion of the support structure.

17. The method of claim 15, wherein retained support structure is removed prior to full rotation of the belt or drum.

UNITED STATES PATENT AND TRADEMARK OFFICE

UNITED STATES DEPARTMENT OF COMMERCE
United States Patent and Trademark Office
Address: COMMISSIONER FOR PATENTS
P.O. Box 1450
Alexandria, Virginia 22313-1450
www.uspto.gov

APPLICATION NO.	FILING DATE	FIRST NAMED INVENTOR	ATTORNEY DOCKET NO.	CONFIRMATION NO.
12/862,584	08/24/2010	Robert McGinnis	O2008-701510	4282

37462 7590 09/13/2011
LANDO & ANASTASI, LLP
ONE MAIN STREET, SUITE 1100
CAMBRIDGE, MA 02142

EXAMINER
MENON, KRISHNAN S

ART UNIT	PAPER NUMBER
1777	

NOTIFICATION DATE	DELIVERY MODE
09/13/2011	ELECTRONIC

Please find below and/or attached an Office communication concerning this application or proceeding.

The time period for reply, if any, is set in the attached communication.

Notice of the Office communication was sent electronically on above-indicated "Notification Date" to the following e-mail address(es):

docketing@LALaw.com
gengelson@LALaw.com

UNITED STATES PATENT AND TRADEMARK OFFICE

Commissioner for Patents
United States Patent and Trademark Office
P.O. Box 1450
Alexandria, VA 22313-1450
www.uspto.gov

SEP 13 2011

WG

In re application of	:	DECISION ON REQUEST TO
Robert McGinnis et al.	:	PARTICIPATE IN PATENT
Serial No. 12/862,584	:	PROSECUTION HIGHWAY
Filed: August 24, 2010	:	PROGRAM AND
For: FORWARD OSMOSIS MEMBRANES	:	PETITION TO MAKE SPECIAL
	:	UNDER 37 CFR 1.102(a)

This is a decision on the request to participate in the PCT Patent Prosecution Highway (PCT-PPH) pilot program and the petition under 37 CFR 1.102(a), filed August 2, 2011, to make the above-identified application special.

The request and petition are **GRANTED**.

A grantable request to participate in the PCT-PPH pilot program and petition to make special require:

(1) The U.S. application must disclose an eligible relationship to one or more PCT applications where the ISA or IPEA are the JPO, EPO, KIPO or USPTO;

(2) At least one claim in the PCT application has novelty, inventive step, and industrial applicability and must be free of any observations in Box VIII in the latest work product in the international stage or applicant must identify and explain why the claim(s) is/are not subject to the observation in Box VIII;

(3) Applicant must submit a copy of the claim(s) from the PCT application(s) that have novelty, inventive step, and industrial applicability along with an English translation thereof and a statement that the English translation is accurate, if the claims are not in the English language;

(4) All the claims in the U.S. application must sufficiently correspond or be amended to sufficiently correspond to the claim(s) that have novelty, inventive step, and industrial applicability in the PCT application(s);

(5) Examination of the U.S. application has not begun;

(6) Applicant must submit a copy of the latest international work product from the PCT application indicating that the claim(s) have novelty, inventive step, and industrial applicability along with an English translation thereof if the latest international work product is not in the English language; and

(7) Applicant must submit an IDS listing the documents cited by the PCT examiner in the international work product along with copies of documents except U.S. patents or U.S. patent application publications.

The request to participate in the PPH program and petition comply with the above requirements. Accordingly, the above-identified application has been accorded "special" status.

The application is being forwarded to the examiner for action on the merits commensurate with this decision.

Any inquiry regarding this decision should be directed to Walter D. Griffin, Supervisory Patent Examiner, at (571) 272-1447.

All other inquiries concerning the examination or status of the application is accessible in the PAIR system at http://www.uspto.gov/ebc/index.html.

/Walter D. Griffin/

Walter D. Griffin
Supervisory Patent Examiner
Technology Center 1700

UNITED STATES PATENT AND TRADEMARK OFFICE

Commissioner for Patents
United States Patent and Trademark Office
P.O. Box 1450
Alexandria, VA 22313-1450
www.uspto.gov

Date: 12/23/11

Patent No. : 8068093 B2
Ser. No. : 12/862,591
Inventor(s) : **Pearce , et al.**
Issued : **November 29, 2011**
Title : **DUPLICATE OBJECTS**
Docket No. : **50407-00018**

Re: Request for Certificate of Correction

Consideration has been given your request for the issuance of a certificate of correction for the above-identified patent under the provisions of Rule(s) 1.322 and/or 1.323.

Assignees' names and addresses (assignment data) printed in a patent, are based *solely* on information supplied in the appropriate space for identifying the assignment data, i.e., item 3 of the Issue Fee Transmittal Form PTOL-85B. Granting of a request under 37 CFR 3.81(b) is required to correct applicant's error providing ***incorrect or erroneous*** assignment data, *before* issuance of a Certificate of Correction, under 37 CFR 1.323 *(see Manual of Patent Examining Procedures (M.P.E.P) Chp.1400, sect. 1481).* This procedure is required *at any time after the issue fee is paid*, including after issuance of the patent.

In view of the foregoing, your request, in this mater, is hereby denied.

A request to correct the Assignee under 37 CFR 3.81(b) should include:

A. **the processing fee set forth in 37 CFR 1.17(i) (currently $130);**
B. a statement that the failure to include the correct assignee name on the PTOL-85B was inadvertent; and
C. a copy of the Notice of Recordation of Assignment Document, reflecting the reel and frame number where the assignment(s) is recorded and/or reflecting proof of *the date* the assignment was submitted for recordation.

In the Request, Applicant(s) may request that the file be forwarded to Certificates of Correction Branch, for issuance of a Certificate of Correction, if the Request is granted.

Any request under 37 CFR 3.81(b) should be directed to the following address or facsimile number:

By mail: Mail Stop PETITIONS

Commissioner for Patents
Post Office Box 1450
Alexandria, VA 22313-1450

By hand: Customer Service Window
Mail Stop Petitions
Randolph Building
401 Dulany Street
Alexandria, VA 22314

By fax: (571) 273-0025
ATTN: Office of Petitions

If a fee (currently $100) was previously submitted for consideration of a Request for Certificate of Correction, under CFR 1.323, to correct assignment data, no additional fee is required.

Lamonte M. Newsome

Lamonte M. Newsome
For Mary Diggs, Supervisor
Decisions & Certificates
Of Correction Branch
(571) 272-3421 or (703)756-1580

MARSH, FISCHMANN & BREYFOGLE LLP
8055 East Tufts Avenue
Suite 450
Denver CO 80237

LMN

UNITED STATES PATENT AND TRADEMARK OFFICE

UNITED STATES DEPARTMENT OF COMMERCE
United States Patent and Trademark Office
Address: COMMISSIONER FOR PATENTS
P.O. Box 1450
Alexandria, Virginia 22313-1450
www.uspto.gov

APPLICATION NO.	FILING DATE	FIRST NAMED INVENTOR	ATTORNEY DOCKET NO.	CONFIRMATION NO.
12/862,619	08/24/2010	Nigel Pearce	50407-00020	4341

25231 7590 11/03/2010
MARSH, FISCHMANN & BREYFOGLE LLP
8055 East Tufts Avenue
Suite 450
Denver, CO 80237

EXAMINER

ART UNIT	PAPER NUMBER
2173	

MAIL DATE	DELIVERY MODE
11/03/2010	PAPER

Please find below and/or attached an Office communication concerning this application or proceeding.

The time period for reply, if any, is set in the attached communication.

UNITED STATES PATENT AND TRADEMARK OFFICE

Commissioner for Patents
United States Patent and Trademark Office
P.O. Box 1450
Alexandria, VA 22313-1450
www.uspto.gov

MARSH, FISCHMANN & BREYFOGLE LLP
8055 East Tufts Avenue
Suite 450
Denver CO 80237

In re Application of: PEARCE et al.
Application No. 12/862,619
Attorney Docket #: 50407-00020
Filed: August 24, 2010
For: **Automatic Tool Dock**

DECISION ON REQUEST TO PARTICIPATE IN PATENT PROSECUTION HIGHWAY PROGRAM AND PETITION TO MAKE SPECIAL UNDER 37 CFR 1.102(a)

This is a decision on the request to participate in the Patent Prosecution Highway (PPH) program and the petition under 37 CFR 1.102(a), filed September 15, 2010 to make the above- identified application special.

The petition is **DISMISSED.**

A grantable request to participate in the PPH program and petition to make special require:

(1) The U.S. application is
(a) a Paris Convention application which either
(i) validly claims priority under 35 U.S.C. 119(a) and 37 CFR 1.55 to one or more applications filed in the UK IPO, or
(ii) validly claims priority to a PCT application that contains no priority claims,

Or

(b) a national stage application under the PCT (an application which entered the national stage in the U.S. from a PCT international application after compliance with 35 U.S.C. 371), which PCT application
(i) validly claims priority to an application filed in the UK IPO, or
(ii) validly claims priority to a PCT application that contains no priority claims, or
(iii) contains no priority claim,

Or

(c) a so-called bypass application filed under 35 U.S.C. 111 (a) which validly claims benefit under 35 U.S.C. 120 to a PCT application, which PCT application
(i) validly claims priority to an application filed in the UK IPO, or
(ii) validly claims priority to a PCT application that contains no priority claims, or
(iii) contains no priority claim.

(2) Applicant must submit a copy of:
a. The allowable/patentable claim(s) from the UK IPO application(s)

(3) Applicant must:
a. Ensure all the claims in the U.S. application must sufficiently correspond or be amended to sufficiently correspond to the allowable/patentable claim(s) in the UK IPO application(s) and
b. Submit a claims correspondence table in English;

(4) Examination of the U.S. application has not begun;

(5) Applicant must submit:
a. Documentation of prior office action:
i. a copy of ALL the office action(s)just prior to the "Decision to Grant a Patent" from each of the UK IPO application(s) containing the allowable/patentable claim(s)

(6) Applicant must submit:
a. An IDS listing the documents cited by the UK IPO examiner in the UK IPO office action (unless already submitted in this application)
b. Copies of the documents except U.S. patents or U.S. patent application publications (unless already submitted in this application);

The request to participate in the PPH pilot program and petition fail to comply with the above requirements.

In particular:

Item 3:
The claims do not correspond. In particular, there is no correspondence to an allowable claim in the UK IPO application for claims 9 and 18 of the instant US application.

Accordingly, the petition is **DISMISSED.**

Applicant is given a time period of ONE MONTH or THIRTY DAYS, whichever is longer, to correct the deficiencies. NO EXTENSION OF TIME UNDER 37 CFR 1.136 IS PERMITTED.

If the deficiencies are not corrected with the time period given, the application will await action in its regular turn.

Response must submitted by EFS-Web using the document description "Petition to make special under Pat Pros Hwy".

Telephone inquiries concerning this decision should be directed to Mano Padmanabhan at 571-272-4210.

All other inquiries concerning the examination or status of the application should be directed to Patent Application Information Retrieval (PAIR) system.

/Mano Padmanabhan/

Mano Padmanabhan
Quality Assurance Specialist, Technology Center 2100, Workgroup 2180
571-272-4210

UNITED STATES PATENT AND TRADEMARK OFFICE

UNITED STATES DEPARTMENT OF COMMERCE
United States Patent and Trademark Office
Address: COMMISSIONER FOR PATENTS
P.O. Box 1450
Alexandria, Virginia 22313-1450
www.uspto.gov

APPLICATION NO.	FILING DATE	FIRST NAMED INVENTOR	ATTORNEY DOCKET NO.	CONFIRMATION NO.
12/862,619	08/24/2010	Nigel Pearce	50407-00020	4341

25231 7590 12/28/2010
MARSH, FISCHMANN & BREYFOGLE LLP
8055 East Tufts Avenue
Suite 450
Denver, CO 80237

EXAMINER

ART UNIT	PAPER NUMBER
2173	

MAIL DATE	DELIVERY MODE
12/28/2010	PAPER

Please find below and/or attached an Office communication concerning this application or proceeding.

The time period for reply, if any, is set in the attached communication.

UNITED STATES PATENT AND TRADEMARK OFFICE

Commissioner for Patents
United States Patent and Trademark Office
P.O. Box 1450
Alexandria, VA 22313-1450
www.uspto.gov

MARSH, FISCHMANN & BREYFOGLE LLP
8055 East Tufts Avenue
Suite 450
Denver CO 80237

In re Application of: PEARCE et al.
Application No. 12/862,619
Attorney Docket #: 50407-00020
Filed: August 24, 2010
For: **Automatic Tool Dock**

DECISION ON REQUEST TO PARTICIPATE IN PATENT PROSECUTION HIGHWAY PROGRAM AND PETITION TO MAKE SPECIAL UNDER 37 CFR 1.102(a)

This is a decision on the renewed request to participate in the Patent Prosecution Highway (PPH) program and the petition under 37 CFR 1.102(a), filed November 30, 2010 to make the above-identified application special.

The petition is **DENIED.**

A grantable request to participate in the PPH program and petition to make special require:

(1) The U.S. application is
(a) a Paris Convention application which either
(i) validly claims priority under 35 U.S.C. 119(a) and 37 CFR 1.55 to one or more applications filed in the UK IPO, or
(ii) validly claims priority to a PCT application that contains no priority claims,

Or

(b) a national stage application under the PCT (an application which entered the national stage in the U.S. from a PCT international application after compliance with 35 U.S.C. 371), which PCT application
(i) validly claims priority to an application filed in the UK IPO, or
(ii) validly claims priority to a PCT application that contains no priority claims, or
(iii) contains no priority claim,

Or

(c) a so-called bypass application filed under 35 U.S.C. 111 (a) which validly claims benefit under 35 U.S.C. 120 to a PCT application, which PCT application
(i) validly claims priority to an application filed in the UK IPO, or

(ii) validly claims priority to a PCT application that contains no priority claims, or
(iii) contains no priority claim.

(2) Applicant must submit a copy of:
a. The allowable/patentable claim(s) from the UK IPO application(s)

(3) Applicant must:
a. Ensure all the claims in the U.S. application must sufficiently correspond or be amended to sufficiently correspond to the allowable/patentable claim(s) in the UK IPO application(s) and
b. Submit a claims correspondence table in English;

(4) Examination of the U.S. application has not begun;

(5) Applicant must submit:
a. Documentation of prior office action:
i. a copy of ALL the office action(s)just prior to the "Decision to Grant a Patent" from each of the UK IPO application(s) containing the allowable/patentable claim(s)

(6) Applicant must submit:
a. An IDS listing the documents cited by the UK IPO examiner in the UK IPO office action (unless already submitted in this application)
b. Copies of the documents except U.S. patents or U.S. patent application publications (unless already submitted in this application);

The request to participate in the PPH pilot program and petition fail to comply with the above requirements.

In particular:
The original petition filed on September 15, 2010 was dismissed because of:
Item 3:
The claims do not correspond. In particular, there is no correspondence to an allowable claim in the UK IPO application for claims 9 and 18 of the instant US application.

In response, Applicant cancelled claims 9 and 18 in the amendment filed on 11/30/2010, but added them back as new claims 19 and 20 in the amendment filed on December 14, 2010. Therefore the new claims 19 and 20 do not have a corresponding allowed claim in the UK application.

Accordingly, the petition is **DENIED.**

The application will therefore be taken up by the examiner for action in its regular turn.

Telephone inquiries concerning this decision should be directed to Mano Padmanabhan at 571-272-4210.

All other inquiries concerning the examination or status of the application should be directed to Patent Application Information Retrieval (PAIR) system.

/Mano Padmanabhan/

Mano Padmanabhan
Quality Assurance Specialist, Technology Center 2100, Workgroup 2180
571-272-4210

UNITED STATES PATENT AND TRADEMARK OFFICE

Commissioner for Patents
United States Patent and Trademark Office
P.O. Box 1450
Alexandria, VA 22313-1450
www.uspto.gov

ROBERT E. BUSHNELL & LAW FIRM
2029 K STREET NW
SUITE 600
WASHINGTON DC 20006-1004

MAILED
JAN 07 2011
OFFICE OF PETITIONS

In re Application of:	:	
Bak et al.	:	
Application No. 12/862625	:	DECISION DISMISSING
Filing or 371(c) Date: 08/24/2010	:	PETITION UNDER
Title of Invention:	:	37 CFR 1.47(a)
CYLINDRICAL SECONDARY BATTERY	:	

This is in response to "Petition Under 37 C.F.R. § 1.47(a) and (b), §1.181 and §1.183," filed August 24, 2010. The petitions are properly treated under 37 CFR 1.47(a)[1], to allow the other inventor(s) to proceed with the application on behalf of himself or herself and the nonsigning inventor.

The petition is **dismissed**.

Rule 47 applicant is given TWO (2) MONTHS from the mailing date of this decision to reply, correcting the below-noted deficiencies. Any reply should be entitled "Request for Reconsideration of Petition Under [insert the applicable code section]"; should only address the deficiencies noted below, except that the reply may include an oath or declaration executed by the non-signing inventor. Failure to respond will result in abandonment of the application. Any extensions of time will be governed by 37 CFR 1.136(a).

The above-identified application was filed on April 24, 2010, and included the present petition, along with a Statement , wherein petitioner provides that there is no current address of the nonsigning inventor. Petitioner provides further that he has not been able to find the nonsigning inventor at the address last known to petitioner. Petitioner states that an Assistant Manager representing Samsung SDI Co., Ltd., (hereinafter "Samsung"), made a diligent effort to reach the inventor by e-mailing a copy of the application, Declaration and Assignment forms to the nonsigning inventor at the inventors last known e-mail address. Petitioner also states that Mr.

[1] A petition under 37 CFR 1.47(b) is appropriate when none of the inventor(s) is available to join in an application. The petition under 37 CFR 1.183 is inappropriate because the petition under rule 1.47(a) will allow acceptance of the oath or declaration without the signature of a joint inventor. The petition's request for a determination and statement that Samsung will conduct prosecution of the application is inappropriate in that the ability of an assignee to act in an application is determined by compliance with 37 CFR 3.73. See, also, MPEP 324.

Seung-Hee Lee mailed to the last known address of the inventor copies of the application, Assignment and Declaration via Registered Korean Postal Service mail.

Applicable Law, rules and MPEP

A grantable petition under 37 CFR 1.47(a) requires: (1) proof that the non-signing inventor cannot be reached or refuses to sign the oath or declaration after having been presented with the application papers (specification, claims and drawings); (2) an acceptable oath or declaration in compliance with 35 U.S.C. §§ 115 and 116; (3) the petition fee; and (4) a statement of the last known address of the non-signing inventor. Applicant lacks item (1) set forth above.

As to item (1), the MPEP provides:

> Where inability to find or reach a nonsigning inventor "after diligent effort" is the reason for filing under 37 CFR 1.47, a statement of facts should be submitted that fully describes the exact facts which are relied on to establish that a diligent effort was made.
> The fact that a nonsigning inventor is on vacation or out of town and is therefore temporarily unavailable to sign the declaration is not an acceptable reason for filing under 37 CFR 1.47.
>
> The statement of facts must be signed, where at all possible, by a person having firsthand knowledge of the facts recited therein. Statements based on hearsay will not normally be accepted. Copies of documentary evidence such as internet searches, certified mail return receipts, cover letters of instructions, telegrams, that support a finding that the nonsigning inventor could not be found or reached should be made part of the statement. The steps taken to locate the whereabouts of the nonsigning inventor should be included in the statement of facts. It is important that the statement contain facts as opposed to conclusions.

Analysis

Petitioner asserts that efforts to locate the nonsigning inventor included an Assistant Manager representing Samsung SDI Co., Ltd., (hereinafter "Samsung"), made a diligent effort to reach the inventor by e-mailing a copy of the application, Declaration and Assignment forms to the nonsigning inventor at the inventors last known e-mail address. Petitioner also states that Mr. Seung-Hee Lee mailed to the last known address of the inventor copies of the application, Assignment and Declaration via Registered Korean Postal Service mail. However, as to diligent effort, at the very least, an Internet search, or a search of telephone directories should be undertaken of the regions where it is suspected the non-signing inventor may reside. Copies of the results of such searches must be referred to in any renewed petition.

Moreover, while petitioner provides that an Assistant Manager made a diligent effort to reach the inventor by e-mailing a copy of the application, and that Mr. Seung-Hee Lee mailed to the last known address of the inventor copies of the application, what is required is a statement of fact from a person with first hand knowledge of the facts relied upon to establish that a diligent effort was made to locate the inventor. *See*, MPEP § 409.03(d).

Conclusion

The petition is dismissed without prejudice. Applicant should file a request for reconsideration of petition and include the proper showing of diligent effort in trying to find or reach the nonsigning inventor, or provide a statement of firsthand knowledge as to why compliance with the showing of diligence as iterated supra may not be met.

Further correspondence with respect to this matter should be addressed as follows:

By mail: Director for Patents
PO Box 1450
Alexandria, VA 22313-1450

By FAX: (571) 273-8300
Attn: Office of Petitions

By hand: Customer Service Window
Randolph Building
401 Dulany Street
Alexandria, VA 22314

Telephone inquiries concerning this matter should be directed to the undersigned at (571) 272-3232.

/DLW/

Derek L. Woods
Attorney
Office of Petitions

UNITED STATES PATENT AND TRADEMARK OFFICE

Commissioner for Patents
United States Patent and Trademark Office
P.O. Box 1450
Alexandria, VA 22313-1450
www.uspto.gov

ROBERT E. BUSHNELL & LAW FIRM
2029 K STREET NW
SUITE 600
WASHINGTON DC 20006-1004

MAILED
APR 22 2011
OFFICE OF PETITIONS

In re Application of:	:	
Bak et al.	:	
Application No. 12/862625	:	DECISION GRANTING
Filing or 371(c) Date: 08/24/2010	:	PETITION UNDER
Title of Invention:	:	37 CFR 1.47(a)
CYLINDRICAL SECONDARY BATTERY	:	

This is in response to "Declaration in Support of Petition Under 37 C.F.R. § 1.47(a) and (b)," filed March 7, 2011, to allow the other inventor(s) to proceed with the application on behalf of himself or herself and the nonsigning inventor. The petition is properly treated as a renewed petition under 37 CFR 1.47(a).

The petition is **granted**.

The above-identified application and papers have been reviewed and found in compliance with 37 CFR 1.47(a). This application is hereby accorded Rule 1.47(a) status.

Petitioner has shown that the non-signing inventor, Jin-Bum Kim, cannot be found or reached after diligent effort.

As provided in Rule 1.47(a), this Office will forward notice of this application's filing to the non-signing inventor at the addresses given in the Petition. Notice of the filing of this application will also be published in the Official Gazette.

The application file is being referred to Technology Center Art Unit 1726 for examination in the normal course of business.

Telephone inquiries related to this decision may be directed to the undersigned at (571) 272-3232.

/DLW/

Derek L. Woods
Attorney
Office of Petitions

UNITED STATES PATENT AND TRADEMARK OFFICE

Commissioner for Patents
United States Patent and Trademark Office
P.O. Box 1450
Alexandria, VA 22313-1450
www.uspto.gov

MR. JIN-BUM KIM.
504, 368-2, SEONGJEONG-DONG,
SEOBUK-GU, CHEONAN-SI,
CHUNGCHEONGNAM-DO
REPUBLIC OF KOREA

MAILED

APR 22 2011

OFFICE OF PETITIONS

In re Application of:	:	
Bak et al.	:	
Application No. 12/862625	:	LETTER
Filing or 371(c) Date: 08/24/2010	:	
Title of Invention:	:	
CYLINDRICAL SECONDARY BATTERY	:	

Dear Mr. Kim:

You are named as a joint inventor in the above-identified United States patent application filed under the provisions of 35 U.S.C. 116 (United States Code) and 37 CFR 1.47(a), Rules of Practice in Patent Cases. Should a patent be granted on the application you will be designated therein as a joint inventor.

As a named inventor you are entitled to inspect any paper in the file wrapper of the application, order copies of all or any part thereof (at a prepaid cost per 37 CFR 1.19) or make your position of record in the application. Alternatively, you may arrange to do any of the preceding through a registered patent attorney or agent presenting written authorization from you. If you care to join the application, counsel of record (see below) would presumably assist you. Joining in the application would entail the filing of an appropriate oath or declaration by you pursuant to 37 CFR 1.63.

Telephone inquiries regarding this communication should be directed to the undersigned at (571) 272-3232. Requests for information regarding your application should be directed to the File Information Unit at (703) 308-2733. Information regarding how to pay for and order a copy of the application, or a specific paper in the application, should be directed to Certification Division at (703) 308-9726 or 1-800-972-6382 (outside the Washington D.C. area).

/DLW/

Derek L. Woods
Attorney
Office of Petitions

CC: ROBERT E. BUSHNELL & LAW FIRM
2029 K STREET NW
SUITE 600
WASHINGTON DC 20006-1004

UNITED STATES PATENT AND TRADEMARK OFFICE

Commissioner for Patents
United States Patent and Trademark Office
P.O. Box 1450
Alexandria, VA 22313-1450
www.uspto.gov

BOOTH ALBANESI SCHROEDER LLC
1601 ELM STREET
SUITE 1950
DALLAS TX 75201-4744

MAILED

MAR 25 2011

OFFICE OF PETITIONS

In re Application of William N. Gibler et al. Application No. 12/862,635 Filed: August 24, 2010 Attorney Docket No. 2009-IP-019498U1C1P1	DECISION ACCORDING STATUS UNDER 37 CFR 1.47(a)

This is in response to the petition filed February 10, 2011 under 37 CFR 1.47(a).

The petition under 37 CFR 1.47(a) is **GRANTED**.

The above-identified application was filed without an executed oath or declaration. Accordingly, a Notice to File Missing Parts was mailed September 10, 2010 requiring, a fully executed oath or declaration and a surcharge for its late filing.

In response, a three month extension of time request and the instant petition, seeking status under 37 CFR 1.47, was filed. Petitioners claim that after diligent effort, joint inventor Frederick J. Gillham cannot be reached or located.

A grantable petition under 37 CFR 1.47(a) requires: (1) proof that the non-signing inventor cannot be reached or refuses to sign the oath or declaration after having been presented with the application papers (specification, claims and drawings); (2) an acceptable oath or declaration in compliance with 35 U.S.C. §§ 115 and 116; (3) the petition fee; and (4) a statement of the last known address of the non-signing inventor.

The petition bears proof that non-signing inventor Frederick Gillham cannot be located to join in the filing of the above-identified application.

The above-identified application and papers have been reviewed and found in compliance with 37 CFR 1.47(a). In view thereof, this application is hereby accorded Rule 1.47(a) status.

Thus, as provided in Rule 1.47c, this Office will forward notice of this application's filing to the non-signing inventor at the address given in the petition. Notice of the filing of this application will also be published in the Official Gazette.

The late filing surcharge, petition fee and the extension of time fee have been charged to the credit card provided.

This matter is being referred to the Office of Patent Application Processing for further pre-examination processing.

Telephone inquiries concerning this matter may be directed to the undersigned Petitions Attorney at (571) 272-3212.

Patricia Faison-Ball

Patricia Faison-Ball
Senior Petitions Attorney
Office of Petitions

UNITED STATES PATENT AND TRADEMARK OFFICE

Commissioner for Patents
United States Patent and Trademark Office
P.O. Box 1450
Alexandria, VA 22313-1450
www.uspto.gov

MAIL

NOV 17 2010

DIRECTOR'S OFFICE
TECHNOLOGY CENTER 2600

MARSH, FISCHMANN & BREYFOGLE LLP
8055 East Tufts Avenue
Suite 450
Denver CO 80237

In re Application of	:	
PEARCE, NIGEL et al.	:	DECISION ON REQUEST TO
Application No. 12/862,641	:	PARTICIPATE IN PATENT
Filed: August 24, 2010	:	PROSECUTION HIGHWAY
Attorney Docket No. 50407-00021	:	PILOT PROGRAM AND PETITION
	:	TO MAKE SPECIAL UNDER
	:	37 CFR 1.102(d)

This is a decision on the request for reconsideration to participate in the Patent Prosecution Highway (PPH) pilot program and the petition under 37 CFR 1.102(d), filed September 15, 2010 to make the above-identified application special.

The request and petition are **GRANTED**.

A grantable request to participate in the PPH pilot program and petition to make special require:

(1) The U.S. application must validly claim priority under 35 U.S.C. 119(a) to one or more applications filed in the UKIPO;
(2) Applicant must submit a copy of the allowable/patentable claim(s) from the UKIPO application(s);
(3) All the claims in the U.S. application must sufficiently correspond or be amended to sufficiently correspond to the allowable/patentable claim(s) in the UKIPO application(s);
(4) Examination of the U.S. application has not begun;
(5) Applicant must submit a copy of all the office actions from each of the UKIPO application(s) containing the allowable/patentable claim(s); and
(6) Applicant must submit an IDS listing the documents cited by the UKIPO examiner in the UKIPO office action along with copies of documents except U.S. patents or U.S. patent application publications.

The request to participate in the PPH program and petition now comply with the above requirements. Accordingly, the above-identified application has been accorded "special" status.

Telephone inquiries concerning this decision should be directed to Michael Horabik at 571-272-3068.

All other inquiries concerning the examination or status of the application should be directed to Patent Application Information Retrieval (PAIR) system.

/Michael Horabik/

Michael Horabik
Quality Assurance Specialist
Technology Center 2600
Communications

UNITED STATES PATENT AND TRADEMARK OFFICE

Commissioner for Patents
United States Patent and Trademark Office
P.O. Box 1450
Alexandria, VA 22313-1450
www.uspto.gov

In re Application of
DANIEL P. ADAMS

Application No. 12862684

Filed:

Attorney Docket No. 31934.00

:DECISION ON PETITION TO MAKE SPECIAL
:UNDER 37 CFR 1.102(c)(1)

This is a decision on the electronic petition under 37 CFR 1.102 (c)(1), filed 24-AUG-2010 to make the above-identified application special based on applicant's age as set forth in MPEP § 708.02, Section IV.

The petition is **GRANTED**.

A grantable petition to make an application special under 37 CFR 1.102(c)(1), MPEP § 708.02, Section IV: Applicant's Age must include a statement by applicant or a registered practitioner having evidence that applicant is at least 65 years of age. No fee is required.

Accordingly, the above-identified application has been accorded "special" status and will be taken up for action by the examiner upon the completion of all pre-examination processing.

Telephone inquiries concerning this electronic decision should be directed to the Electronic Business Center at 866-217-9197.

All other inquiries concerning either the examination or status of the application should be directed to the Technology Center.

Doc code : PET.OP.AGE
Description : Petition to make special based on Age/Health

PTO/SB/130 (07-09)
Approved for use through 07/31/2012. OMB 0651- 0031
U.S. Patent and Trademark Office; U.S. DEPARTMENT OF COMMERCE
Under the Paperwork Reduction Act of 1995, no persons are required to respond to a collection of information unless it contains a valid OMB control number

PETITION TO MAKE SPECIAL BASED ON AGE FOR ADVANCEMENT OF EXAMINATION UNDER 37 CFR 1.102(c)(1)

Application Information

Application Number	12862684	Confirmation Number	4492	Filing Date	2010-08-24
Attorney Docket Number (optional)	31934.00	Art Unit		Examiner	
First Named Inventor	DANIEL P. ADAMS				
Title of Invention	RECEPTACLE FOR A GATE DROP ROD				

Attention: Office of Petitions
An application may be made special for advancement of examination upon filing of a petition showing that the applicant is 65 years of age, or more. No fee is required with such a petition. See 37 CFR 1.102(c)(1) and MPEP 708.02 (IV).

APPLICANT HEREBY PETITIONS TO MAKE SPECIAL FOR ADVANCEMENT OF EXAMINATION IN THIS APPLICATION UNDER 37 CFR 1.102(c)(1) and MPEP 708.02 (IV) ON THE BASIS OF THE APPLICANT'S AGE.

A grantable petition requires one of the following items:
(1) Statement by one named inventor in the application that he/she is 65 years of age, or more; or
(2) Certification by a registered attorney/agent having evidence such as a birth certificate, passport, driver's license, etc. showing one named inventor in the application is 65 years of age, or more.

Name of Inventor who is 65 years of age, or older

Given Name	Middle Name	Family Name	Suffix
DANIEL	P.	ADAMS	

A signature of the applicant or representative is required in accordance with 37 CFR 1.33 and 10.18.
Please see 37 CFR 1.4(d) for the format of the signature.

Select (1) or (2) :

○ (1) I am an inventor in this application and I am 65 years of age, or more.

◉ (2) I am an attorney or agent registered to practice before the Patent and Trademark Office, and I certify that I am in possession of evidence, and will retain such in the application file record, showing that the inventor listed above is 65 years of age, or more.

Signature	/ROBERT B. LYONS/	Date (YYYY-MM-DD)	2010-08-24
Name	ROBERT B. LYONS	Registration Number	40708

PTO/SB/130 (07-09)
Approved for use through 07/31/2012. OMB 0651- 0031
U.S. Patent and Trademark Office; U.S. DEPARTMENT OF COMMERCE
Under the Paperwork Reduction Act of 1995, no persons are required to respond to a collection of information unless it contains a valid OMB control number

Privacy Act Statement

The Privacy Act of 1974 (P.L. 93-579) requires that you be given certain information in connection with your submission of the attached form related to a patent application or patent. Accordingly, pursuant to the requirements of the Act, please be advised that: (1) the general authority for the collection of this information is 35 U.S.C. 2(b)(2); (2) furnishing of the information solicited is voluntary; and (3) the principal purpose for which the information is used by the U.S. Patent and Trademark Office is to process and/or examine your submission related to a patent application or patent. If you do not furnish the requested information, the U.S. Patent and Trademark Office may not be able to process and/or examine your submission, which may result in termination of proceedings or abandonment of the application or expiration of the patent.

The information provided by you in this form will be subject to the following routine uses:

1. The information on this form will be treated confidentially to the extent allowed under the Freedom of Information Act (5 U.S.C. 552) and the Privacy Act (5 U.S.C. 552a). Records from this system of records may be disclosed to the Department of Justice to determine whether the Fr eedom of Information Act requires disclosure of these records.

2. A record from this system of records may be disclosed, as a routine use, in the course of presenting evidence to a court, magistrate, or administrative tribunal, including disclosures to opposing counsel in the course of settlement negotiations.

3. A record in this system of records may be disclosed, as a routine use, to a Member of Congress submitting a request involving an individual, to whom the record pertains, when the individual has requested assistance from the Member with respect to the subject matter of the record.

4. A record in this system of records may be disclosed, as a routine use, to a contractor of the Agency having need for the information in order to perform a contract. Recipients of information shall be required to comply with the requirements of the Privacy Act of 1974, as amended, pursuant to 5 U.S.C. 552a(m).

5. A record related to an International Application filed under the Patent Cooperation Treaty in this system of records may be disclosed, as a routine use, to the International Bureau of the World Intellectual Property Organization, pursuant to the Patent Cooperation Treaty.

6. A record in this system of records may be disclosed, as a routine use, to another federal agency for purposes of National Security review (35 U.S.C. 181) and for review pursuant to the Atomic Energy Act (42 U.S.C. 218(c)).

7. A record from this system of records may be disclosed, as a routine use, to the Administrator, General Services, or his/her designee, during an inspection of records conducted by GSA as part of that agency's responsibility to recommend improvements in records management practices and programs, under authority of 44 U.S.C. 2904 and 2906. Such disclosure shall be made in accordance with the GSA regulations governing inspection of records for this purpose, and any other relevant (i.e., GSA or Commerce) directive. Such disclosure shall not be used to make determinations about indivi duals.

8. A record from this system of records may be disclosed, as a routine use, to the public after either publication of the application pursuant to 35 U.S.C. 122(b) or issuance of a patent pursuant to 35 U.S.C. 151. Further, a record may be disclosed, subject to the limitations of 37 CFR 1.14, as a routine use, to the public if the record was filed in an application which became abandoned or in which the proceedings were terminated and which application is referenced by either a published application, an application open to public inspections or an issued patent.

9. A record from this system of records may be disclosed, as a routine use, to a Federal, State, or local law enforcement agency, if the USPTO becomes aware of a violation or potential violation of law or regulation.

UNITED STATES PATENT AND TRADEMARK OFFICE

UNITED STATES DEPARTMENT OF COMMERCE
United States Patent and Trademark Office
Address: COMMISSIONER FOR PATENTS
P.O. Box 1450
Alexandria, Virginia 22313-1450
www.uspto.gov

APPLICATION NO.	FILING DATE	FIRST NAMED INVENTOR	ATTORNEY DOCKET NO.	CONFIRMATION NO.
12/862,712	08/24/2010	Jeffrey Vincent TOFANO	B-6770 625691-8	4530

7590 10/04/2010

JT
Kalnay
Kraguljac & Kalnay, LLC
4700 Rockside Road, Summit One, Suite 510
Independence, OH 44131

EXAMINER

ART UNIT	PAPER NUMBER
2189	

MAIL DATE	DELIVERY MODE
10/04/2010	PAPER

Please find below and/or attached an Office communication concerning this application or proceeding.

The time period for reply, if any, is set in the attached communication.

UNITED STATES PATENT AND TRADEMARK OFFICE

Commissioner for Patents
United States Patent and Trademark Office
P.O. Box 1450
Alexandria, VA 22313-1450
www.uspto.gov

JT
Kalnay
Kraguljac & Kalnay, LLC
4700 Rockside Road, Summit One, Suite 510
Independence OH 44131

In re Application of: J. Tofano
Application No. 12/862,712
Attorney Docket #: B-6770 625691-8
Filed: August 24, 2010
For: **CONTROLLING CONFIGURABLE VARIABLE DATA REDUCTION**

DECISION ON REQUEST TO PARTICIPATE IN PATENT PROSECUTION HIGHWAY PROGRAM AND PETITION TO MAKE SPECIAL UNDER 37 CFR 1.102(a)

This is a decision on the request to participate in the Patent Prosecution Highway (PPH) program and the petition under 37 CFR 1.102(a), filed August 24, 2010 to make the above-identified application special.

The petition is **GRANTED.**

A grantable request to participate in the PPH program and petition to make special require:

(1) The U.S. application is
(a) a Paris Convention application which either
(i) validly claims priority under 35 U.S.C. 119(a) and 37 CFR 1.55 to one or more applications filed in the UK IPO, or
(ii) validly claims priority to a PCT application that contains no priority claims,

Or

(b) a national stage application under the PCT (an application which entered the national stage in the U.S. from a PCT international application after compliance with 35 U.S.C. 371), which PCT application
(i) validly claims priority to an application filed in the UK IPO, or
(ii) validly claims priority to a PCT application that contains no priority claims, or
(iii) contains no priority claim,

Or

(c) a so-called bypass application filed under 35 U.S.C. 111 (a) which validly claims benefit under 35 U.S.C. 120 to a PCT application, which PCT application

(i) validly claims priority to an application filed in the UK IPO, or
(ii) validly claims priority to a PCT application that contains no priority claims, or
(iii) contains no priority claim.

(2) Applicant must submit a copy of:
a. The allowable/patentable claim(s) from the UK IPO application(s)

(3) Applicant must:
a. Ensure all the claims in the U.S. application must sufficiently correspond or be amended to sufficiently correspond to the allowable/patentable claim(s) in the UK IPO application(s) and
b. Submit a claims correspondence table in English;

(4) Examination of the U.S. application has not begun;

(5) Applicant must submit:
a. Documentation of prior office action:
i. a copy of ALL the office action(s)just prior to the "Decision to Grant a Patent" from each of the UK IPO application(s) containing the allowable/patentable claim(s)

(6) Applicant must submit:
a. An IDS listing the documents cited by the UK IPO examiner in the UK IPO office action (unless already submitted in this application)
b. Copies of the documents except U.S. patents or U.S. patent application publications (unless already submitted in this application);

The petition is **GRANTED.**

The request to participate in the PPH pilot program and petition are found to comply with the above requirements. Accordingly, the above-identified application has been accorded "special" status.

Telephone inquiries concerning this decision should be directed to Mano Padmanabhan at 571-272-4210.

All other inquiries concerning the examination or status of the application is accessible in the PAIR system at http://www.uspto.gov/ebc/index.html.

The application is being forwarded to the examiner for action on the merits commensurate with this decision.

/Mano Padmanabhan/

Mano Padmanabhan
Quality Assurance Specialist, Technology Center 2100, Workgroup 2180
571-272-4210

EAST Search History

EAST Search History (Prior Art)

Ref #	Hits	Search Query	DBs	Default Operator	Plurals	Time Stamp
S1	1330	(206/320).CCLS.	US-PGPUB; USPAT; USOCR; FPRS; EPO; JPO; DERWENT	OR	OFF	2010/10/29 14:57
S2	478	(206/305).CCLS.	US-PGPUB; USPAT; USOCR; FPRS; EPO; JPO; DERWENT	OR	OFF	2010/10/29 15:35
S3	475	(206/472).CCLS.	US-PGPUB; USPAT; USOCR; FPRS; EPO; JPO; DERWENT	OR	OFF	2010/10/29 15:45
S4	109	(206/473).CCLS.	US-PGPUB; USPAT; USOCR; FPRS; EPO; JPO; DERWENT	OR	OFF	2010/10/29 16:06
S5	0	(220/348.8).CCLS.	US-PGPUB; USPAT; USOCR; FPRS; EPO; JPO; DERWENT	OR	OFF	2010/10/29 16:11
S6	145	(220/350).CCLS.	US-PGPUB; USPAT; USOCR; FPRS; EPO; JPO; DERWENT	OR	OFF	2010/10/29 16:11

S7	0	(220/345).CCLS.	US-PGPUB; USPAT; USOCR; FPRS; EPO; JPO; DERWENT	OR	OFF	2010/10/29 16:12
S8	176	(220/351).CCLS.	US-PGPUB; USPAT; USOCR; FPRS; EPO; JPO; DERWENT	OR	OFF	2010/10/29 16:13
S9	0	(220/351.1).CCLS.	US-PGPUB; USPAT; USOCR; FPRS; EPO; JPO; DERWENT	OR	OFF	2010/10/29 16:13
S10	0	(220/351.3).CCLS.	US-PGPUB; USPAT; USOCR; FPRS; EPO; JPO; DERWENT	OR	OFF	2010/10/29 16:13
S11	233	(220/345.3).CCLS.	US-PGPUB; USPAT; USOCR; FPRS; EPO; JPO; DERWENT	OR	OFF	2010/10/29 16:13
S12	274	(220/345.1).CCLS.	US-PGPUB; USPAT; USOCR; FPRS; EPO; JPO; DERWENT	OR	OFF	2010/10/29 16:14
S13	0	(220/348.8).CCLS.	US-PGPUB; USPAT; USOCR; FPRS; EPO; JPO; DERWENT	OR	OFF	2010/10/29 16:14
S14	200	(220/348).CCLS.	US-PGPUB; USPAT; USOCR; FPRS; EPO; JPO; DERWENT	OR	OFF	2010/10/29 16:15

S15	274	(220/345.1).CCLS.	US-PGPUB; USPAT; USOCR; FPRS; EPO; JPO; DERWENT	OR	OFF	2010/10/29 16:19
S16	233	(220/345.3).CCLS.	US-PGPUB; USPAT; USOCR; FPRS; EPO; JPO; DERWENT	OR	OFF	2010/10/29 16:21
S17	145	(220/350).CCLS.	US-PGPUB; USPAT; USOCR; FPRS; EPO; JPO; DERWENT	OR	OFF	2010/10/29 16:26
S18	176	(220/351).CCLS.	US-PGPUB; USPAT; USOCR; FPRS; EPO; JPO; DERWENT	OR	OFF	2010/10/29 16:29
S19	189	(220/811).CCLS.	US-PGPUB; USPAT; USOCR; FPRS; EPO; JPO; DERWENT	OR	OFF	2010/10/29 16:57
S20	342	(220/812).CCLS.	US-PGPUB; USPAT; USOCR; FPRS; EPO; JPO; DERWENT	OR	OFF	2010/10/29 17:01
S21	127	(220/813).CCLS.	US-PGPUB; USPAT; USOCR; FPRS; EPO; JPO; DERWENT	OR	OFF	2010/10/29 17:25
S22	1330	(206/320).CCLS.	US-PGPUB; USPAT; USOCR; FPRS; EPO; JPO; DERWENT	OR	OFF	2010/11/01 10:44

S23	478	(206/305).CCLS.	US-PGPUB; USPAT; USOCR; FPRS; EPO; JPO; DERWENT	OR	OFF	2010/11/01 13:03
S24	0	("magnetadjclosure").PN.	US-PGPUB; USPAT; USOCR; FPRS; EPO; JPO; DERWENT	OR	OFF	2010/11/01 13:16
S25	197	magnet adj closure	US-PGPUB; USPAT; USOCR; FPRS; EPO; JPO; DERWENT	OR	ON	2010/11/01 13:17
S26	2501	206/320	US-PGPUB; USPAT; USOCR; FPRS; EPO; JPO; DERWENT	OR	ON	2010/11/01 13:17
S27	4	S25 and S26	US-PGPUB; USPAT; USOCR; FPRS; EPO; JPO; DERWENT	OR	ON	2010/11/01 13:17
S28	294	magnet adj (closure 0r flaps)	US-PGPUB; USPAT; USOCR; FPRS; EPO; JPO; DERWENT	OR	ON	2010/11/01 13:19
S29	4	S28 and S27	US-PGPUB; USPAT; USOCR; FPRS; EPO; JPO; DERWENT	OR	ON	2010/11/01 13:19
S30	1329	206/305	US-PGPUB; USPAT; USOCR; FPRS; EPO; JPO; DERWENT	OR	ON	2010/11/01 13:20

S31	0	S28 and S30	US-PGPUB; USPAT; USOCR; FPRS; EPO; JPO; DERWENT	OR	ON	2010/11/01 13:20
S32	293	magnet adj (closure or flaps)	US-PGPUB; USPAT; USOCR; FPRS; EPO; JPO; DERWENT	OR	ON	2010/11/01 13:20
S33	0	S30 and S32	US-PGPUB; USPAT; USOCR; FPRS; EPO; JPO; DERWENT	OR	ON	2010/11/01 13:20
S34	293	magnet adj (closure or flap$1)	US-PGPUB; USPAT; USOCR; FPRS; EPO; JPO; DERWENT	OR	ON	2010/11/01 13:20
S35	0	S30 and S34	US-PGPUB; USPAT; USOCR; FPRS; EPO; JPO; DERWENT	OR	ON	2010/11/01 13:20
S36	136900	"206"/$.ccls.	US-PGPUB; USPAT; USOCR; FPRS; EPO; JPO; DERWENT	OR	ON	2010/11/01 13:21
S37	17	S34 and S36	US-PGPUB; USPAT; USOCR; FPRS; EPO; JPO; DERWENT	OR	ON	2010/11/01 13:21
S38	141	220/811	US-PGPUB; USPAT; USOCR; FPRS; EPO; JPO; DERWENT	OR	ON	2010/11/01 13:26

S39	3941750	(spring or elastic)	US-PGPUB; USPAT; USOCR; FPRS; EPO; JPO; DERWENT	OR	ON	2010/11/01 13:27
S40	0	220/345.1,345.3,348.8,350,351	US-PGPUB; USPAT; USOCR; FPRS; EPO; JPO; DERWENT	OR	ON	2010/11/01 13:27
S41	778	(220/345.1,345.3,348.8,350,351).CCLS.	US-PGPUB; USPAT; USOCR; FPRS; EPO; JPO; DERWENT	OR	OFF	2010/11/01 13:27
S42	0	("17and19").PN.	US-PGPUB; USPAT; USOCR; FPRS; EPO; JPO; DERWENT	OR	OFF	2010/11/01 13:28
S43	0	S39 and S40	US-PGPUB; USPAT; USOCR; FPRS; EPO; JPO; DERWENT	OR	ON	2010/11/01 13:28
S44	176	S39 and S41	US-PGPUB; USPAT; USOCR; FPRS; EPO; JPO; DERWENT	OR	ON	2010/11/01 13:28
S45	902	buckle$1 adj clasp	US-PGPUB; USPAT; USOCR; FPRS; EPO; JPO; DERWENT	OR	ON	2010/11/01 14:10
S46	1	S26 and S45	US-PGPUB; USPAT; USOCR; FPRS; EPO; JPO; DERWENT	OR	ON	2010/11/01 14:10

S47	0	S23 and S45	US-PGPUB; USPAT; USOCR; FPRS; EPO; JPO; DERWENT	OR	ON	2010/11/01 14:12
S48	1263	206/315.11	US-PGPUB; USPAT; USOCR; FPRS; EPO; JPO; DERWENT	OR	ON	2010/11/01 14:14
S49	253	buckle adj closure	US-PGPUB; USPAT; USOCR; FPRS; EPO; JPO; DERWENT	OR	ON	2010/11/01 14:14
S50	1	S48 and S49	US-PGPUB; USPAT; USOCR; FPRS; EPO; JPO; DERWENT	OR	ON	2010/11/01 14:14
S51	136900	"206"/$.ccls.	US-PGPUB; USPAT; USOCR; FPRS; EPO; JPO; DERWENT	OR	ON	2010/11/01 14:15
S52	7	S49 and S51	US-PGPUB; USPAT; USOCR; FPRS; EPO; JPO; DERWENT	OR	ON	2010/11/01 14:15
S53	415	206/45.23	US-PGPUB; USPAT; USOCR; FPRS; EPO; JPO; DERWENT	OR	ON	2010/11/01 14:21
S54	253	buckle adj closure	US-PGPUB; USPAT; USOCR; FPRS; EPO; JPO; DERWENT	OR	ON	2010/11/01 14:21

S55	2826	buckle adj strap	US-PGPUB; USPAT; USOCR; FPRS; EPO; JPO; DERWENT	OR	ON	2010/11/01 14:21
S56	0	S53 and S55	US-PGPUB; USPAT; USOCR; FPRS; EPO; JPO; DERWENT	OR	ON	2010/11/01 14:21
S57	87	S36 and S55	US-PGPUB; USPAT; USOCR; FPRS; EPO; JPO; DERWENT	OR	ON	2010/11/01 14:22
S58	1100	elastic adj rope$1	US-PGPUB; USPAT; USOCR; FPRS; EPO; JPO; DERWENT	OR	ON	2010/11/01 14:31
S59	0	S41 and S58	US-PGPUB; USPAT; USOCR; FPRS; EPO; JPO; DERWENT	OR	ON	2010/11/01 14:31
S60	5099	elastic with rope$1	US-PGPUB; USPAT; USOCR; FPRS; EPO; JPO; DERWENT	OR	ON	2010/11/01 14:32
S61	0	S41 and S60	US-PGPUB; USPAT; USOCR; FPRS; EPO; JPO; DERWENT	OR	ON	2010/11/01 14:32
S62	10495	(rope$1 or band$1) with closure	US-PGPUB; USPAT; USOCR; FPRS; EPO; JPO; DERWENT	OR	ON	2010/11/01 14:33

S63	4	S41 and S62	US-PGPUB; USPAT; USOCR; FPRS; EPO; JPO; DERWENT	OR	ON	2010/11/01 14:33
S64	894	elastic with (rope$1 or band$1) with closure	US-PGPUB; USPAT; USOCR; FPRS; EPO; JPO; DERWENT	OR	ON	2010/11/01 14:35
S65	0	S41 and S64	US-PGPUB; USPAT; USOCR; FPRS; EPO; JPO; DERWENT	OR	ON	2010/11/01 14:35

EAST Search History (Interference)

<This search history is empty>

11/3/2010 4:57:18 PM
H:\ protective cover for electronic.wsp

UNITED STATES PATENT AND TRADEMARK OFFICE

Commissioner for Patents
United States Patent and Trademark Office
P.O. Box 1450
Alexandria, VA 22313-1450
www.uspto.gov

Paper No.

LADAS & PARRY
5670 WILSHIRE BOULEVARD
SUITE 2100
LOS ANGELES CA 90036-5679

MAILED
DEC 20 2010
OFFICE OF PETITIONS

In re Application of :
Jung Lee :
Application No. 12/862,735 : ON PETITION
Filed: September 21, 2010 :
Attorney Docket No. B-6758 625708 :

This is a decision on the PETITION UNDER 37 CFR 1.53(b) IN RESPONSE TO NOTICE OF INCOMPLETE NON-PROVISIONAL APPLICATION filed September 21, 2010, requesting that the above-identified application be accorded a filing date of August 24, 2010.

The application was deposited on August 24, 2010. However, on September 10, 2010, the Office mailed a "Notice of Incomplete Nonprovisional Application," advising applicant that the application had not been accorded a filing date because the application was deposited without drawings.

In response, the present petition was filed requesting, in effect, that the application be accorded a filing date of August 24, 2010, with the application amended to include the drawings of Figures 1-6, 7A-7C, and 8-15 described in the specification and first received in the Office on September 21, 2010. Petitioner acknowledges that the drawings were omitted through clerical error during electronic filing.

The petition is **dismissed** to the extent that applicant requests a filing date of August 24, 2010 with the drawings filed September 21, 2010, considered part of the original application disclosure. The application is entitled to a filing date of September 21, 2010, the date of filing of the omitted drawings.

35 U.S.C. 111(a)(4) provides, in pertinent part, that:

> The filing date of an application shall be the date on which the specification and any required drawing are received in the Patent and Trademark Office.

A review of the record supports a conclusion that drawings are required in this application. Petitioner does not dispute this conclusion. Further, Petitioner acknowledges that drawings were not received in this application as deposit on August 24, 2010. Yet, Petitioner does not establish that the omitted drawings should be considered filed in this application on August 24, 2010 by virtue of any incorporation by reference. Accordingly, the required drawings are considered received in the Office on September 21, 2010. Thus, this application is entitled to a filing date of September 21, 2010.

The application is being returned to the Office of Patent Application Processing for according of a filing date of September 21, 2010, the date of filing of the omitted drawings, and issuance of a filing receipt.

Telephone inquiries related to this decision may be directed to the undersigned at (571) 272-3219.

Nancy Johnson

Nancy Johnson
Senior Petitions Attorney
Office of Petitions

UNITED STATES PATENT AND TRADEMARK OFFICE

Commissioner for Patents
United States Patent and Trademark Office
P.O. Box 1450
Alexandria, VA 22313-1450
www.uspto.gov

HULTQUIST IP
P.O. BOX 14329
RESEARCH TRIANGLE PARK NC 27709

MAILED

SEP 23 2011

OFFICE OF PETITIONS

In re Application of	:	
Ziyun Wang et al	:	
Application No. 12/862,739	:	DECISION ON PETITION
Filed: August 24, 2010	:	
Attorney Docket No. 2771-678-CIP-CON2	:	

This is a decision on the petition, filed August 7, 2011, entitled "REQUEST FOR RESCISSION OF NOTICE OF ABANDONMENT AND REQUEST FOR REISSUE OF OFFICE ACTION, IN CONSEQUENCE OF USPTO ERROR, IN U.S. PAENT APPLICATION NO. 12/862,739" which is being treated as a petition under 37 CFR 1.181 (no fee) requesting withdrawal of the holding of abandonment in the above-identified application.

The petition is **DISMISSED**.

Any request for reconsideration of this decision should be filed within two (2) months from the mail date of this decision. *Note* 37 CFR 1.181(f). The request for reconsideration should include a cover letter and be entitled as a "Renewed Petition under 37 CFR 1.181 to Withdraw the Holding of Abandonment."

This application was held abandoned for failure to reply to the nonfinal Office action mailed January 27, 2011, which set a three (3) month shortened statutory period for reply. A Notice of Abandonment was mailed on August 3, 2011.

Applicant files the above petition and states that "Request is made for rescission of such Notice of Abandonment, on the basis of self-evident USPTO error in the processing of an Office Action dated January 27, 2011, which as a result of USPTO mis-processing was never transmitted to or received by the office of the undersigned attorney as it should have been"

Applicant also states that "A review of such "Miscellaneous Incoming Letter" posted by the USPTO to the Image File Wrapper record of the above-identified application shows that it was

not an "Incoming" document at all, but in fact is the same January 27, 2011 Office Action that was posted by the USPTO to the Image File Wrapper record of the above-identified application on January 27, 2011 as "Non-Final Rejection" in the transaction history of the Image File Wrapper record (see Exhibit C, showing a screen shot of page 1 of the "01-27-2011 Non-Final Rejection" file opened by clicking on the hyperlink of such document on the USPTO PAIR webpage for the above-identified application containing the listing of the Image File Wrapper Available Documents, as accessed on August 7, 2011)."

Applicant further states that "...the USPTO mis-processed the January 27, 2011 Office Action, which as a result of such mis-processing was never transmitted to or received by the office of the undersigned attorney as it should have been. Instead, the January 27, 2011 Office Action subsequent to its initial generation was processed as a "Miscellaneous Incoming Letter" and was never sent to or received by the undersigned attorney at his office address stated on the Office Action document."

However, while the document coded as LET. (Miscellaneous Incoming Letter in the Image File Wrapper record of the above application) and having a filing date of February 7, 2011, is a copy of the Office action mailed to the applicant on January 27, 2011, the entry of the document does not by itself indicate lack of receipt of the Office action by the applicant.

Applicable Law, Rules and MPEP

The MPEP 711.03(c)A, Petition To Withdraw Holding of Abandonment Based on Failure To Receive Office Action, provides

> In Delgar v. Schulyer, 172 USPQ 513 (D.D.C. 1971), the court decided that the Office should mail a new Notice of Allowance in view of the evidence presented in support of the contention that the applicant's representative did not receive the original Notice of Allowance. Under the reasoning of Delgar, an allegation that an Office action was never received may be considered in a petition to withdraw the holding of abandonment. If adequately supported, the Office may grant the petition to withdraw the holding of abandonment and remail the Office action. That is, the reasoning of Delgar is applicable regardless of whether an application is held abandoned for failure to timely pay the issue fee (35 U.S.C. 151) or for failure to prosecute (35 U.S.C. 133).
> To minimize costs and burdens to practitioners and the Office, the Office has modified the showing required to establish nonreceipt of an Office action. The showing required to establish nonreceipt of an Office communication must include a statement from the practitioner describing the system used for recording an Office action received at the correspondence address of record with the USPTO. The statement should establish that the docketing system is sufficiently reliable. It is expected that the record would include, but not be limited to, the application number, attorney docket number, the mail date of the Office action and the due date for the response.

> Practitioner must state that the Office action was not received at the correspondence address of record, and that a search of the practitioner's record(s), including any file jacket or the equivalent, and the application contents, indicates that the Office action was not received. A copy of the record(s) used by the practitioner where the non-received Office action would have been entered had it been received is required.
> A copy of the practitioner's record(s) required to show non-receipt of the Office action should include the master docket for the firm. That is, if a three month period for reply was set in the nonreceived Office action, a copy of the master docket report showing all replies docketed for a date three months from the mail date of the nonreceived Office action must be submitted as documentary proof of nonreceipt of the Office action. If no such master docket exists, the practitioner should so state and provide other evidence such as, but not limited to, the following: the application file jacket; incoming mail log; calendar; reminder system; or the individual docket record for the application in question.
> The showing outlined above may not be sufficient if there are circumstances that point to a conclusion that the Office action may have been lost after receipt rather than a conclusion that the Office action was lost in the mail (e.g., if the practitioner has a history of not receiving Office actions). (Emphasis supplied).

Analysis/conclusion

Regrettably, the petition is not grantable at this time. The Office requirements for granting a petition to withdraw the holding of abandonment based upon non-receipt of an Office communication have been modified. The Office requires a statement from the practitioner describing the system used for recording an Office action received at the correspondence address of record with the U.S.P.O. The statement should establish that the docketing system is sufficiently reliable. In addition, a copy of the practitioner's record(s) required to show non-receipt of the Office action should include the master docket for the firm. That is, if a three month period for reply was set in the nonreceived Office action, a copy of the master docket report showing all replies docketed for a date three months from the mail date of the nonreceived Office action must be submitted as documentary proof of nonreceipt of the Office action. If no such master docket exists, the practitioner should so state and provide other evidence such as, but not limited to, the following: the application file jacket; incoming mail log; calendar; reminder system; or the individual docket record for the application in question.

Accordingly, absent the required evidence to establish nonreceipt of the Office action of January 27, 2011, the petition requesting withdrawal of the holding of abandonment cannot be granted at this time.

If petitioner cannot supply the evidence necessary to withdraw the holding of abandonment, or simply does not wish to, petitioner should consider filing a petition under 37 CFR 1.137(b) stating that the delay was unintentional. Public Law 97-247, § 3, 96 Stat. 317 (1982), which revised patent and trademark fees, amended 35 U.S.C. § 41(a)(7) to provide for the revival of an "unintentionally" abandoned application without a showing that the delay in prosecution or in late payment of the issue fee was "unavoidable." This amendment to 35 U.S.C. § 41(a)(7) has

been implemented in 37 CFR 1.137(b). An "unintentional" petition under 37 CFR 1.137(b) must be accompanied by the petition fee set forth by 37 CFR 1.17(m).

The filing of a petition under 37 CFR 1.137(b) cannot be intentionally delayed and therefore must be filed promptly. A person seeking revival due to unintentional delay cannot make a statement that the delay was unintentional unless the entire delay, including the date it was discovered that the application was abandoned until the filing of the petition to revive under 37 CFR 1.137(b), was unintentional. A statement that the delay was unintentional is not appropriate if petitioner intentionally delayed the filing of a petition for revival under 37 CFR 1.137(b).

Further correspondence with respect to this matter should be delivered through one of the following mediums:

By mail: Mail Stop PETITIONS
Commissioner for Patents
Post Office Box 1450
Alexandria, VA 22313-1450

By hand: Customer Service Window
Mail Stop Petitions
Randolph Building
401 Dulany Street
Alexandria, VA 22314

By fax: (571) 273-8300
ATTN: Office of Petitions

By internet: EFS-Web
www.uspto.gov/ebc/efs_help.html
(for help using EFS-Web call the
Patent Electronic Business Center
at (866) 217-9197)

Any questions concerning this matter may be directed to the undersigned at (571) 272-3208.

/Karen Creasy/
Karen Creasy
Petitions Examiner
Office of Petitions

UNITED STATES PATENT AND TRADEMARK OFFICE

Commissioner for Patents
United States Patent and Trademark Office
P.O. Box 1450
Alexandria, VA 22313-1450
www.uspto.gov

HULTQUIST IP
P.O. BOX 14329
RESEARCH TRIANGLE PARK , NC 27709

MAILED

DEC 01 2011

OFFICE OF PETITIONS

In re Application of	:	
Ziyun Wang et al	:	
Application No. 12/862,739	:	DECISION ON PETITION
Filed: August 24, 2010	:	
Attorney Docket No. 2771-678-CIP-CON2	:	

This is a decision on the renewed petition, filed October 31, 2011, which is being treated as a petition under 37 CFR 1.181 (no fee) requesting withdrawal of the holding of abandonment in the above-identified application.

The petition is **GRANTED**.

This application was held abandoned for failure to reply to the nonfinal Office action mailed January 27, 2011, which set a three (3) month shortened statutory period for reply. A Notice of Abandonment was mailed on August 3, 2011.

Petitioner asserts that the Office action dated January 27, 2011 was not received.

A review of the written record indicates no irregularity in the mailing of the Office action, and, in the absence of any irregularity, there is a strong presumption that the Office action was properly mailed to the practitioner at the address of record. This presumption may be overcome by a showing that the Office action was not in fact received. In this regard, the showing required to establish the failure to receive the Office action must consist of the following:

1. a statement from practitioner stating that the Office action was not received by the practitioner;

2. a statement from the practitioner attesting to the fact that a search of the file jacket and docket records indicates that the Office action was not received;

3. a statement from the practitioner describing the system used for recording an Office action received at the correspondence address of record with the USPTO. The statement should establish that the docketing system is sufficiently reliable, and

4. a copy of the practitioner's record(s) required to show non-receipt of the Office action should include the master docket for the firm. That is, if a three month period for reply was set in the nonreceived Office action, a copy of the master docket report showing all replies docketed for a date three months from the mail date of the nonreceived Office action must be submitted as documentary proof of nonreceipt of the Office action. If no such master docket exists, the practitioner should so state and provide other evidence such as, but not limited to, the following: the application file jacket; incoming mail log; calendar; reminder system; or the individual docket record for the application in question.

See MPEP § 711.03(c) under subheading "Petition to Withdraw Holding of Abandonment Based on Failure to Receive Office Action," and "Withdrawing the Holding of Abandonment When Office Actions Are Not Received," 1156 Official Gazette 53 (November 16, 1993).

The petition satisfies the above-stated requirements. Accordingly, the application was not abandoned in fact.

In view of the above, the Notice of Abandonment is hereby vacated and the holding of abandonment withdrawn.

This application is being referred to the Technology Center technical support staff of Art Unit 1621 for re-mailing the Office action of January 27, 2011. The period for reply will run from the mailing date of the Office action.

/KOC/
Karen Creasy
Petitions Examiner
Office of Petitions
571-272-3208

UNITED STATES PATENT AND TRADEMARK OFFICE

Commissioner for Patents
United States Patent and Trademark Office
P.O. Box 1450
Alexandria, VA 22313-1450
www.uspto.gov

MAILED SEP 3 0 2010

David E. Crites
15900 Rochin Terrace
Los Gatos CA 95032

In re Application of: David E. Crites Application No.: 12/862742 Filed: August 24, 2010 Title: DARK IV MONITORING SYSTEM FOR PHOTOVOLTAIC INSTALLATIONS	DECISION ON PETITION TO MAKE SPECIAL FOR NEW APPLICATION UNDER 37 C.F.R. § 1.102 & M.P.E.P. § 708.02

This is a decision on the petition filed on August 24, 2010 to make the above-identified application special for accelerated examination procedure under 37 C.F.R. § 1.102(d).

The petition to make the application special is **DENIED**.

REGULATION AND PRACTICE

To be eligible for accelerated examination under 37 C.F.R. § 1.102(d) and pursuant to the "Change to Practice for Petitions in Patent Applications to Make Special and for Accelerated Examination" published in the Federal Register on June 26, 2006 (71 Fed. Reg. 36323), the following conditions must be satisfied:

1. The application must be a non-reissue utility or design application filed under 37 CFR 1.111(a);
2. The application, the petition and the required fees must be filed electronically using the USPTO's electronic filing system (EFS), or EFS-web; if not filed electronically, a statement asserting that EFS and EFS-web were not available during the normal business hours;
3. The application, at the time of filing, must be complete under 37 CFR 1.51 and in condition for examination;
4. The application must contain three or fewer independent claims and twenty or fewer total claims and the claims must be directed to a single invention.

The application as filed is not eligible for the accelerated examination under 37 C.F.R. § 1.102(d) because it was not complete under 37 CFR 1.51 and in condition for examination at the time of filing. The mailing of a Notice to File Missing Parts of Nonprovisional Application on

August 26, 2010 is evidence that the application was not complete and in condition for examination at the time of filing.

For the above-stated reasons, the petition is **DENIED**. The application will therefore be taken up by the examiner for action in its regular turn.

Any inquiry regarding this decision should be directed to Linda Sholl, TC 3700 Special Program Examiner, at (571) 272-4391.

Linda Sholl

Linda Sholl
Special Program Examiner
Technology Center 3700

Doc Code: PET.GREEN
Document Description: Petition for Green Tech Pilot

PTO/SB/420 (11-10)
Approved for use through 01/31/2011. OMB 0651-0062
U.S. Patent and Trademark Office; U. S. DEPARTMENT OF COMMERCE
Under the Paperwork Reduction Act of 1995, no persons are required to respond to a collection of information unless it displays a valid OMB control number.

PETITION TO MAKE SPECIAL UNDER THE GREEN TECHNOLOGY PILOT PROGRAM

Attorney Docket Number: 83145386(FMC3114PUS)	Application Number (if known): 12/862,824	Filing date: August 25, 2010
First Named Inventor: Mark G. Smith		
Title: Electric Compartment Exhaust Duct with Enhanced Air Cooling Features		

APPLICANT HEREBY REQUESTS TO PARTICIPATE IN THE GREEN TECHNOLOGY PILOT PROGRAM FOR THE ABOVE-IDENTIFIED APPLICATION. See Instruction Sheet on page 2.

This petition must be timely filed electronically using the USPTO electronic filing system, EFS-Web.

1. By filing this petition:

   Applicant is requesting early publication: Applicant hereby requests early publication under 37 CFR 1.219 and the publication fee set forth in 37 CFR 1.18(d) accompanies this request.

2. By filing this petition: applicant is agreeing to make an election without traverse in a telephonic interview and elect an invention that meets the eligibility requirements for the Green Technology Pilot Program, if the Office determines that the claims are not obviously directed to a single invention. See Instruction Sheet.

3. This request is accompanied by statements of special status for the eligibility requirement.

4. The application contains no more than three (3) independent claims and twenty (20) total claims.

5. The application does not contain any multiple dependent claims.

6. Other attachments: Statement to Make Special

Signature /Gary A. Smith/	Date March 9, 2011
Name (Print/Typed) Gary A. Smith	Registration Number 39376

Note: *Signatures of all the inventors or assignees of record of the entire interest or their representative(s) are required in accordance with 37 CFR 1.33 and 11.18. Please see 37 CFR 1.4(d) for the form of the signature. If necessary, submit multiple forms for more than one signature see below*.*

☐ *Total of ..... forms are submitted.

The information is required to obtain or retain a benefit by the public which is to file (and by the USPTO to process) an application. Confidentiality is governed by 35 U.S.C. 122 and 37 CFR 1.11 and 1.14. This collection is estimated to take 12 hours to complete, including gathering, preparing, and submitting the completed application form to the USPTO. Time will vary depending upon the individual case. Any comments on the amount of time you require to complete this form and/or suggestions for reducing this burden, should be sent to the Chief Information Officer, U.S. Patent and Trademark Office, U.S. Department of Commerce, P.O. Box 1450, Alexandria, VA 22313-1450. DO NOT SEND FEES OR COMPLETED FORMS TO THIS ADDRESS. **SEND TO: Commissioner for Patents, P.O. Box 1450, Alexandria, VA 22313-1450.**

If you need assistance in completing the form, call 1-800-PTO-9199 and select option 2.

IN THE UNITED STATES PATENT AND TRADEMARK OFFICE

In re application of:

Mark G. Smith

Group Art Unit: 3744

Examiner: Unknown

Serial No.: 12/862,824

Filed: August 25, 2010

For: Electric Compartment Exhaust Duct with Enhanced Air Cooling Features

Attorney Docket No.: 83145386 (FMC 3114 PUS)

STATEMENT SUPPORTING ELIGIBILITY REQUIREMENT OF THE GREEN TECHNOLOGY PILOT PROGRAM

Commissioner for Patents
U.S. Patent and Trademark Office
P.O. Box 1450
Alexandria, VA 22313-1450

Dear Sir:

This Statement of Special Status for the Eligibility Requirement is being filed concurrently with a Petition To Make Special Under the Green Technology Pilot Program (PTO/SB/420), and pursuant to the requirements of 74 Fed. Reg. 64,666 (Dec. 8, 2009), as amended by 75 Fed. Reg. 28, 554 (May 21, 2010) and 75 Fed. Reg. 68049 (Nov. 10, 2010).

Applicant respectfully submits that the above-identified application is eligible for the "Green Technology Pilot Program" as materially contributing to the more efficient utilization and conservation of energy resources or the reduction of greenhouse gas emissions.

As explained in the specification at page 1, lines 18-21, and page 2, lines 1-4, for example, the above-identified application describes and claims an invention that, in a vehicle having electrical components that produce waste heat, provides increased passenger comfort without the need to run an air conditioning unit, thus preventing the expenditure of energy (in the

form of electrical power and/or increased load on an internal combustion engine) that would otherwise be required.

To get more energy efficient electrically-powered vehicles (both pure electric and hybrid) on the road quickly and at a price that customers can afford, most automakers are converting vehicle platforms that were previously powered by internal combustion engines. This typically results in the battery compartment being located in or adjacent to the passenger compartment. Often the most practical path for exhausting the waste heat from batteries is directly into the passenger compartment. If this makes the passengers uncomfortably warm, the only alternative is to open the windows or turn on an air conditioning system. Both of these alternatives will result in poorer gas mileage and so a waste of energy. The claimed invention reduces or eliminates the need for those alternatives.

As such, the claimed invention materially contributes to conservation of energy resources and/or the reduction of greenhouse gas emissions.

The Application is a non-reissue, non-provisional utility application filed under 35 U.S.C. §111(a). The Application contains no more than three (3) independent claims and twenty (20) total claims. The Application does not contain multiple dependent claims. A first Office action has not yet appeared in the Patent Application Information Retrieval System (PAIR).

The publication fee under 37 C.F.R. § 1.18(d) of $300 has been paid upon filing. Please charge any additional required fees to Deposit Account No. 06-1510 (Ford Global Technologies, LLC).

Respectfully submitted,

Mark G. Smith

By: /Gary A. Smith/

Gary A. Smith
Reg. No. 39,376
Attorney for Applicant

Date: March 9, 2011

BROOKS KUSHMAN P.C.
1000 Town Center, 22nd Floor
Southfield, MI 48075-1238
Phone: 248-358-4400
Fax: 248-358-3351

Doc Code: PET.GREEN
Document Description: Petition for Green Tech Pilot

PTO/SB/420 (11-10)
Approved for use through 01/31/2011. OMB 0651-0062
U.S. Patent and Trademark Office; U. S. DEPARTMENT OF COMMERCE
Under the Paperwork Reduction Act of 1995, no persons are required to respond to a collection of information unless it displays a valid OMB control number.

PETITION TO MAKE SPECIAL UNDER THE GREEN TECHNOLOGY PILOT PROGRAM

Attorney Docket Number: 83145386(FMC3114PUS)	Application Number (if known): 12/862,824	Filing date: August 25, 2010
First Named Inventor: Mark G. Smith		
Title: Electric Compartment Exhaust Duct with Enhanced Air Cooling Features		

APPLICANT HEREBY REQUESTS TO PARTICIPATE IN THE GREEN TECHNOLOGY PILOT PROGRAM FOR THE ABOVE-IDENTIFIED APPLICATION. See Instruction Sheet on page 2.

This petition must be timely filed electronically using the USPTO electronic filing system, EFS-Web.

1. By filing this petition:

   Applicant is requesting early publication: Applicant hereby requests early publication under 37 CFR 1.219 and the publication fee set forth in 37 CFR 1.18(d) accompanies this request.

2. By filing this petition: applicant is agreeing to make an election without traverse in a telephonic interview and elect an invention that meets the eligibility requirements for the Green Technology Pilot Program, if the Office determines that the claims are not obviously directed to a single invention. See Instruction Sheet.

3. This request is accompanied by statements of special status for the eligibility requirement.

4. The application contains no more than three (3) independent claims and twenty (20) total claims.

5. The application does not contain any multiple dependent claims.

6. Other attachments: Statement to Make Special

Signature /Gary A. Smith/	Date March 9, 2011
Name (Print/Typed) Gary A. Smith	Registration Number 39376

Note: *Signatures of all the inventors or assignees of record of the entire interest or their representative(s) are required in accordance with 37 CFR 1.33 and 11.18. Please see 37 CFR 1.4(d) for the form of the signature. If necessary, submit multiple forms for more than one signature see below*.*

☐ *Total of ..... forms are submitted.

The information is required to obtain or retain a benefit by the public which is to file (and by the USPTO to process) an application. Confidentiality is governed by 35 U.S.C. 122 and 37 CFR 1.11 and 1.14. This collection is estimated to take 12 hours to complete, including gathering, preparing, and submitting the completed application form to the USPTO. Time will vary depending upon the individual case. Any comments on the amount of time you require to complete this form and/or suggestions for reducing this burden, should be sent to the Chief Information Officer, U.S. Patent and Trademark Office, U.S. Department of Commerce, P.O. Box 1450, Alexandria, VA 22313-1450. DO NOT SEND FEES OR COMPLETED FORMS TO THIS ADDRESS. **SEND TO: Commissioner for Patents, P.O. Box 1450, Alexandria, VA 22313-1450.**

If you need assistance in completing the form, call 1-800-PTO-9199 and select option 2.

IN THE UNITED STATES PATENT AND TRADEMARK OFFICE

In re application of:

Mark G. Smith

Group Art Unit: 3744

Examiner: Unknown

Serial No.: 12/862,824

Filed: August 25, 2010

For: Electric Compartment Exhaust Duct with Enhanced Air Cooling Features

Attorney Docket No.: 83145386 (FMC 3114 PUS)

STATEMENT SUPPORTING ELIGIBILITY REQUIREMENT OF THE GREEN TECHNOLOGY PILOT PROGRAM

Commissioner for Patents
U.S. Patent and Trademark Office
P.O. Box 1450
Alexandria, VA 22313-1450

Dear Sir:

This Statement of Special Status for the Eligibility Requirement is being filed concurrently with a Petition To Make Special Under the Green Technology Pilot Program (PTO/SB/420), and pursuant to the requirements of 74 Fed. Reg. 64,666 (Dec. 8, 2009), as amended by 75 Fed. Reg. 28, 554 (May 21, 2010) and 75 Fed. Reg. 68049 (Nov. 10, 2010).

Applicant respectfully submits that the above-identified application is eligible for the "Green Technology Pilot Program" as materially contributing to the more efficient utilization and conservation of energy resources or the reduction of greenhouse gas emissions.

As explained in the specification at page 1, lines 18-21, and page 2, lines 1-4, for example, the above-identified application describes and claims an invention that, in a vehicle having electrical components that produce waste heat, provides increased passenger comfort without the need to run an air conditioning unit, thus preventing the expenditure of energy (in the

form of electrical power and/or increased load on an internal combustion engine) that would otherwise be required.

To get more energy efficient electrically-powered vehicles (both pure electric and hybrid) on the road quickly and at a price that customers can afford, most automakers are converting vehicle platforms that were previously powered by internal combustion engines. This typically results in the battery compartment being located in or adjacent to the passenger compartment. Often the most practical path for exhausting the waste heat from batteries is directly into the passenger compartment. If this makes the passengers uncomfortably warm, the only alternative is to open the windows or turn on an air conditioning system. Both of these alternatives will result in poorer gas mileage and so a waste of energy. The claimed invention reduces or eliminates the need for those alternatives.

As such, the claimed invention materially contributes to conservation of energy resources and/or the reduction of greenhouse gas emissions.

The Application is a non-reissue, non-provisional utility application filed under 35 U.S.C. §111(a). The Application contains no more than three (3) independent claims and twenty (20) total claims. The Application does not contain multiple dependent claims. A first Office action has not yet appeared in the Patent Application Information Retrieval System (PAIR).

The publication fee under 37 C.F.R. § 1.18(d) of $300 has been paid upon filing. Please charge any additional required fees to Deposit Account No. 06-1510 (Ford Global Technologies, LLC).

Respectfully submitted,

Mark G. Smith

By: /Gary A. Smith/

Gary A. Smith
Reg. No. 39,376
Attorney for Applicant

Date: March 9, 2011

BROOKS KUSHMAN P.C.
1000 Town Center, 22nd Floor
Southfield, MI 48075-1238
Phone: 248-358-4400
Fax: 248-358-3351

UNITED STATES PATENT AND TRADEMARK OFFICE

UNITED STATES DEPARTMENT OF COMMERCE
United States Patent and Trademark Office
Address: COMMISSIONER FOR PATENTS
P.O. Box 1450
Alexandria, Virginia 22313-1450
www.uspto.gov

APPLICATION NO.	FILING DATE	FIRST NAMED INVENTOR	ATTORNEY DOCKET NO.	CONFIRMATION NO.
12/862,824	08/25/2010	Mark G. Smith	83145386	4717

28395 7590 03/22/2011
BROOKS KUSHMAN P.C./FGTL
1000 TOWN CENTER
22ND FLOOR
SOUTHFIELD, MI 48075-1238

EXAMINER	
ART UNIT	PAPER NUMBER
3749	

MAIL DATE	DELIVERY MODE
03/22/2011	PAPER

Please find below and/or attached an Office communication concerning this application or proceeding.

The time period for reply, if any, is set in the attached communication.

UNITED STATES PATENT AND TRADEMARK OFFICE

Commissioner for Patents
United States Patent and Trademark Office
P.O. Box 1450
Alexandria, VA 22313-1450
www.uspto.gov

BROOKS KUSHMAN P.C./FGTL
1000 TOWN CENTER
22ND FLOOR
SOUTHFIELD MI 48075-1238

In re Application of	:	
SMITH, MARK G.	:	DECISION ON PETITION
Application No. 12/862,824	:	TO MAKE SPECIAL UNDER
Filed: Aug. 25, 2010	:	THE GREEN TECHNOLOGY
Attorney Docket No. 83145386	:	PILOT PROGRAM

This is a decision on the petitions under 37 CFR 1.102, filed March 9, 2011 and March 11, 2011, to make the above-identified application special under the pilot program for applications pertaining to Green Technologies as set forth in 74 Federal Register Notice 64666 (December 8, 2009) and amended by 75 Federal Register Notice 28554 (May 21, 2010) and 75 Federal Register Notice 69049 (November 10, 2010).

The petition is **dismissed**.

If reconsideration of this decision is desired, a petition for reconsideration must be filed within ONE (1) MONTH OR THIRTY (30) DAYS from the mail date of this decision, whichever is longer. No extension of this time limit can be granted under 37 CFR 1.136(a) or (b). The petition for reconsideration should include an exhaustive attempt to provide the lacking item(s) noted below, since, after a decision on the petition for reconsideration, no further reconsideration or review of the matter will be undertaken by the Director.

A grantable petition to make an application special under 37 CFR 1.102 and the pilot program as set forth in 74 FR 64666 must be directed to a nonprovisional application filed under 35 USC 111(a) or be a national stage entry under 35 USC 371, exclusive of any reissue applications.

In order to qualify for special status, the following requirements must be met. 1) The application must have no more than 3 independent claims and no more than 20 total claims. 2) The application must not contain any multiple dependent claims. 3) The petition must state the basis for seeking special status, i.e., the claimed invention either: A) materially enhances the quality of the environment or B) materially contributes to: i) the discovery or development of renewable energy resources, ii) the more efficient utilization and conservation of energy resources, or iii) greenhouse gas emission reduction. 4) If the disclosure is not clear on its face that the claimed invention materially contributes under category (A) or (B), the petition must be accompanied by a statement by the applicant, assignee, or an attorney/agent registered to practice before the

Office explaining how the materiality standard is met. 5) A statement that applicant will agree to make an election without traverse in a telephonic interview if a restriction requirement is made by the examiner. 6) The petition to make special must be filed electronically. 7) The petition must be filed at least one day prior to the date that a first Office Action appears in the Patent Application Information Retrieval (PAIR) system. 8) The petition must be accompanied by a request for early publication in compliance with 37 CFR 1.219 and include the publication fee as set forth in 37 CFR 1.18(d).

The requirement for a fee for consideration of the petition to make special for applications pertaining to Green Technologies has been waived. The petition lacks item # 4.

In regard to item 4, petitioner should note that the instant petition includes a statement identifying the basis for the special status (i.e., whether the instant invention (1) materially enhances the quality of the environment or materially contributes to (2) development of renewable energy resources or energy conservation, or (3) greenhouse gas reduction) as required by sections II and III of the notice. However, as stated in the notice, applicant must also provide a statement pertaining to the materiality standard if the application disclosure is not clear on its face as to the materiality of the basis for the special status of the invention. This petition lacks such a statement and it is not agreed that the application on its face meets that materiality standard. For example, it is not clear how the claimed drawing and mixing cabin cool air with the outgoing warm exhaust air from an electric component will provide and enhance the quality of the environment or contribute to energy conservation or greenhouse gas reduction.

Any reconsideration of this decision should be submitted through the USPTO electronic filing system, EFS-Web, and selecting the document description of "Petition for Green Tech Pilot" on the EFS-Web screen.

Telephone inquiries concerning this decision should be directed to Henry C. Yuen at 571-272-4856.

The application is currently undergoing pre-examination processing. The application will be forwarded to the Technology Center Art Unit 3749 for action in its regular turn.

/Henry C. Yuen/

Henry C. Yuen
Quality Assurance Specialist
Technology Center 3700

PTO/SB/20PCT-EP (05-10)
Approved for use through 01/31/2015. OMB 0651-0058
U.S. Patent and Trademark Office; U.S DEPARTMENT OF COMMERCE
Under the Paperwork Reduction Act of 1995, no persons are required to respond to a collection of information unless it displays a valid OMB control number.

REQUEST FOR PARTICIPATION IN THE PATENT COOPERATION TREATY – PATENT PROSECUTION HIGHWAY (PCT-PPH) PILOT PROGRAM BETWEEN THE EUROPEAN PATENT OFFICE (EPO) AND THE USPTO

Application No.:	12/862881	First Named Inventor:	Scott T. Burr, et al.
Filing Date:	August 25, 2010	Attorney Docket No.:	70199-US-NP
Title of the Invention:	FLUID FILTER MODULE INCLUDING SEALED BOSS		

THIS REQUEST FOR PARTICIPATION IN THE PCT-PPH PILOT PROGRAM ALONG WITH THE REQUIRED DOCUMENTS MUST BE SUBMITTED VIA EFS-WEB. INFORMATION REGARDING EFS-WEB IS AVAILABLE AT HTTP://WWW.USPTO.GOV/EBC/EFS_HELP.HTML.

APPLICANT HEREBY REQUESTS PARTICIPATION IN THE PCT-PPH PILOT PROGRAM AND PETITIONS TO MAKE THE ABOVE-IDENTIFIED APPLICATION SPECIAL UNDER THE PCT-PPH PILOT PROGRAM.

The above-identified application is (1) a national stage entry of the corresponding PCT application, or (2) a national stage entry of another PCT application which claims priority to the corresponding PCT application, or (3) a national application that claims domestic/ foreign priority to the corresponding PCT application, or (4) a national application which forms the basis for the priority claim in the corresponding PCT application, or (5) a continuing application of a U.S. application that satisfies one of (1) to (4) above, or (6) a U.S. application that claims domestic benefit to a U.S. provisional application which forms the basis for the priority claim in the corresponding PCT application.

The corresponding PCT application number(s) is/are: PCT/US2011/046068

The international filing date of the corresponding PCT application(s) is/are: August 1, 2011

I. List of Required Documents:

a. **A copy of the latest international work product (WO/ISA, WO/IPEA, or IPER) in the above-identified corresponding PCT application(s)**

- ☑ is attached.
- ☐ is not attached because the document is already in the U.S. application.

b. **A copy of all claims which were indicated as having novelty, inventive step and industrial applicability in the above-identified corresponding PCT application(s)**

- ☑ is attached.
- ☐ is not attached because the document is already in the U.S. application.

c. **English translations of the documents in a. and b. above are attached (if the documents are not in the English language). A statement that the English translation is accurate is attached for the document in b. above.**

d. **(1) An information disclosure statement listing the documents cited in the international work products (ISR, WO/ISA, WO/IPEA, IPER) of the corresponding PCT application.**

- ☐ is attached.
- ☑ has already been filed in the above-identified U.S. application on December 1, 2011

(2) Copies of all documents (except for U.S. patents or U.S. patent application publications)

- ☐ are attached.
- ☑ have already been filed in the above-identified U.S. application on December 1, 2011

This collection of information is required by 35 U.S.C. 119, 37 CFR 1.55, and 37 CFR 1.102(d). The information is required to obtain or retain a benefit by the public, which is to file (and by the USPTO to process) an application. Confidentiality is governed by 35 U.S.C. 122 and 37 CFR 1.11 and 1.14. This collection is estimated to take 2 hours to complete, including gathering, preparing, and submitting the completed application form to the USPTO. Time will vary depending upon the individual case. Any comments on the amount of time you require to complete this form and/or suggestions for reducing this burden should be sent to the Chief Information Officer, U.S. Patent and Trademark Office, U.S. Department of Commerce, P.O. Box 1450, Alexandria, VA 22313-1450. DO NOT SEND FEES OR COMPLETED FORMS TO THIS ADDRESS.

Under the Paperwork Reduction Act of 1995, no persons are required to respond to a collection of information unless it displays a valid OMB control number.

REQUEST FOR PARTICIPATION IN THE PCT-PPH PILOT PROGRAM BETWEEN THE EPO AND THE USPTO

(continued)

Application No.:	12/862881	First Named Inventor:	Scott T. Burr, et al.

II. Claims Correspondence Table:

Claims in US Application	Patentable Claims in the corresponding PCT application	Explanation regarding the correspondence
1 - 8	1 - 8	Claims are identical to those submitted as Art. 34 Amendments

III. All the claims in the US application sufficiently correspond to the patentable claims in the corresponding PCT application.

Signature /Edward W. Black/	Date March 2, 2012
Name (Print/Typed) Edward W. Black	Registration Number 36454

Privacy Act Statement

The **Privacy Act of 1974 (P.L. 93-579)** requires that you be given certain information in connection with your submission of the attached form related to a patent application or patent. Accordingly, pursuant to the requirements of the Act, please be advised that: (1) the general authority for the collection of this information is 35 U.S.C. 2(b)(2); (2) furnishing of the information solicited is voluntary; and (3) the principal purpose for which the information is used by the U.S. Patent and Trademark Office is to process and/or examine your submission related to a patent application or patent. If you do not furnish the requested information, the U.S. Patent and Trademark Office may not be able to process and/or examine your submission, which may result in termination of proceedings or abandonment of the application or expiration of the patent.

The information provided by you in this form will be subject to the following routine uses:

1. The information on this form will be treated confidentially to the extent allowed under the Freedom of Information Act (5 U.S.C. 552) and the Privacy Act (5 U.S.C 552a). Records from this system of records may be disclosed to the Department of Justice to determine whether disclosure of these records is required by the Freedom of Information Act.
2. A record from this system of records may be disclosed, as a routine use, in the course of presenting evidence to a court, magistrate, or administrative tribunal, including disclosures to opposing counsel in the course of settlement negotiations.
3. A record in this system of records may be disclosed, as a routine use, to a Member of Congress submitting a request involving an individual, to whom the record pertains, when the individual has requested assistance from the Member with respect to the subject matter of the record.
4. A record in this system of records may be disclosed, as a routine use, to a contractor of the Agency having need for the information in order to perform a contract. Recipients of information shall be required to comply with the requirements of the Privacy Act of 1974, as amended, pursuant to 5 U.S.C. 552a(m).
5. A record related to an International Application filed under the Patent Cooperation Treaty in this system of records may be disclosed, as a routine use, to the International Bureau of the World Intellectual Property Organization, pursuant to the Patent Cooperation Treaty.
6. A record in this system of records may be disclosed, as a routine use, to another federal agency for purposes of National Security review (35 U.S.C. 181) and for review pursuant to the Atomic Energy Act (42 U.S.C. 218(c)).
7. A record from this system of records may be disclosed, as a routine use, to the Administrator, General Services, or his/her designee, during an inspection of records conducted by GSA as part of that agency's responsibility to recommend improvements in records management practices and programs, under authority of 44 U.S.C. 2904 and 2906. Such disclosure shall be made in accordance with the GSA regulations governing inspection of records for this purpose, and any other relevant (*i.e.*, GSA or Commerce) directive. Such disclosure shall not be used to make determinations about individuals.
8. A record from this system of records may be disclosed, as a routine use, to the public after either publication of the application pursuant to 35 U.S.C. 122(b) or issuance of a patent pursuant to 35 U.S.C. 151. Further, a record may be disclosed, subject to the limitations of 37 CFR 1.14, as a routine use, to the public if the record was filed in an application which became abandoned or in which the proceedings were terminated and which application is referenced by either a published application, an application open to public inspection or an issued patent.
9. A record from this system of records may be disclosed, as a routine use, to a Federal, State, or local law enforcement agency, if the USPTO becomes aware of a violation or potential violation of law or regulation.

UNITED STATES PATENT AND TRADEMARK OFFICE

Commissioner for Patents
United States Patent and Trademark Office
P.O. Box 1450
Alexandria, VA 22313-1450
www.uspto.gov

MAILED

MAR 12 2012

OFFICE OF PETITIONS

THE DOW CHEMICAL COMPANY
P.O. BOX 1967
2040 DOW CENTER
MIDLAND MI 48641

In re Application of
Scott T. Burr et al
Application No.: 12/862,881
Filed: August 25, 2010
Attorney Docket No.: 70199-US-NP
For:FLUID FILTER MODULE
INCLUDING SEALED BOSS

: DECISION ON REQUEST TO
: PARTICIPATE IN THE PATENT
: PROSECUTION HIGHWAY
: PROGRAM AND PETITION
: TO MAKE SPECIAL UNDER
: 37 CFR 1.102(a)
:
:

This is a decision on the request to participate in the PCT Patent Prosecution Highway (PCT-PPH) pilot program and the petition under 37 CFR 1.102(a), filed on March 2, 2012, to make the above-identified application special.

The request and petition are **GRANTED**.

Discussion

A grantable request to participate in the PCT-PPH pilot program and petition to make special require:

(1) The U.S. application must have an eligible relationship to one or more PCT applications where the ISA or IPEA are the JPO, EPO, KIPO, NPI, NBPR, or USPTO;

(2) At least one claim in the PCT application has novelty, inventive step, and industrial applicability and must be free of any observations in Box VIII in the latest work product in the international stage or applicant must identify and explain why the claim(s) is/are not subject to the observation in Box VIII;

(3) Applicant must submit a copy of the claim(s) from the PCT application(s) that have novelty, inventive step, and industrial applicability along with an English translation thereof and a statement that the English translation is accurate, if the claims are not in the English language;

(4) All the claims in the U.S. application must sufficiently correspond or be amended to sufficiently correspond to the claim(s) that have novelty, inventive step, and industrial applicability in the PCT application(s);

(5) Examination of the U.S. application has not begun;

(6) Applicant must submit a copy of the latest international work product from the PCT application indicating that the claim(s) have novelty, inventive step, and industrial applicability along with an English translation thereof and a statement that the English translation is accurate if the latest international work product is not in the English language;

(7) Applicant must submit an IDS listing the documents cited by the PCT examiner in the international work product along with copies of documents except U.S. patents or U.S. patent application publications.

The request to participate in the PCT-PPH pilot program and petition comply with the above requirements. Accordingly, the above-identified application has been accorded "special" status.

Telephone inquiries concerning this decision should be directed to Karen Creasy at 571-272-3208.

All other inquiries concerning the examination or status of the application is accessible in the PAIR system at http://www.uspto.gov/ebc.index.html.

This application will be forwarded to the examiner for action on the merits commensurate with this decision once this application's formality reviews have been completed.

Diane Goodwyn
Petitions Examiner
Office of Petitions

UNITED STATES PATENT AND TRADEMARK OFFICE

UNITED STATES DEPARTMENT OF COMMERCE
United States Patent and Trademark Office
Address: COMMISSIONER FOR PATENTS
P.O. Box 1450
Alexandria, Virginia 22313-1450
www.uspto.gov

APPLICATION NO.	FILING DATE	FIRST NAMED INVENTOR	ATTORNEY DOCKET NO.	CONFIRMATION NO.
12/862,942	08/25/2010	Hidefumi Yoshida	4328.70702D6	4967

24978 7590 08/01/2011
GREER, BURNS & CRAIN
300 S WACKER DR
25TH FLOOR
CHICAGO, IL 60606

EXAMINER
DUONG, TAI V

ART UNIT	PAPER NUMBER
2871	

MAIL DATE	DELIVERY MODE
08/01/2011	PAPER

Please find below and/or attached an Office communication concerning this application or proceeding.

The time period for reply, if any, is set in the attached communication.

UNITED STATES PATENT AND TRADEMARK OFFICE

Commissioner for Patents
United States Patent and Trademark Office
P.O. Box 1450
Alexandria, VA 22313-1450
www.uspto.go

GREER, BURNS & CRAIN
300 S WACKER DR
25TH FLOOR
CHICAGO, IL 60606

AUG 1 2011

In re Application of YOSHIDA ET AL. Application No. 12/862,942 Filed: August 25, 2010 Attorney Docket No. 4328.70702D6 Application Title: ALIGNMENT TREATMENT OF LIQUID CRYSTAL DISPLAY DEVICE	DECISION ON PETITION TO MAKE SPECIAL FOR ACCELERATED EXAMINATION

This is a decision on the petition filed on August 25, 2010, to make the above-identified application "special" for accelerated examination under MPEP § 708.01(I) and § 707.02.

The petition to make the application special is **DENIED**.

Any petition to make "special", other than those based on applicant's health, age, or the Patent Prosecution Highway ("PPH") pilot program, for an application filed *prior to August 26, 2006* must meet the requirements set forth in MPEP § 708.02 (I-II and V-XII).

Any petition to make "special", other than those based on applicant's health, age, or PPH pilot program, for an application filed *on or after August 26, 2006* must the requirements for Accelerated Examination as set forth in MPEP § 708.02(a) [see also *Changes to Prac. for Pet. in Pat. Apps. to Make Spec. and for Accel. Exam.*, 71 Fed. Reg. 36323, June 26, 2006.]:

REGULATION AND PRACTICE

A grantable petition to make special under 37 C.F.R. § 1.102(d) and pursuant to the "Change to Practice for Petitions in Patent Applications to Make Special and for Accelerated Examination" published in the Federal Register on June 26, 2006 (71 Fed. Reg. 36323), see also MPEP 708.02(a), must satisfy the following conditions:

I. Conditions Regarding the Application:

1. the application must be a non-reissue utility or design application filed under 37 CFR 1.111(a);
2. the application, the petition and the required fees must be filed electronically using the USPTO's electronic filing system (EFS), or EFS-web; if not filed electronically, a statement asserting that EFS and EFS-web were not available during the normal business hours.
3. at the time of filing, the application must be complete under 37 CFR 1.51 and in condition for examination;
4. the application must contain three or fewer independent claims and twenty or fewer total claims and the claims must be directed to a single invention.

II. Conditions Regarding the Petition:

The petition must:

1. be filed with the application;
2. include a statement that applicant agrees not to separately argue the patentability of any independent claim during any appeal in the application;
3. include a statement that applicant agrees to make an election without traverse in a telephone interview.
4. include a statement that applicant agrees to conduct such an interview when requested by the examiner.
5. include a statement, made based on a good faith belief, that a preexamination search in compliance with the following requirements, was conducted, including an identification of the field of search by United States class and subclass, where applicable, and for database searches, the search logic or chemical structure or sequence used as a query, the name of the file(s) searched and the database service, and the date of the search.

The preexamination search must:

5.1 involve U.S. patents and patent application publications, foreign patent documents, and non-patent literature, unless the applicant can justify with reasonable certainty that no references more pertinent than those already identified are likely to be found in the eliminated sources and includes such a justification with this statement;

5.2. be directed to the claimed invention and encompass all of the features of the claims, giving the claims the broadest reasonable interpretation;

5.3. encompass the disclosed features that may be claimed.

6. must provide in support of the petition an accelerated examination support document. An accelerated examination support document must include:

6.1. an information disclosure statement (IDS) in compliance with 37 CFR 1.98 citing each reference deemed most closely related to the subject matter of each of the claims;

6.2. an identification of all the limitations in the claims that are disclosed by the reference specifying where the limitation is disclosed in the cited reference;

6.3. a detailed explanation of how each of the claims are patentable over the references cited with particularity required by 37 CFR 1.111(b) and (c);

6.4. a concise statement of the utility of the invention as defined in each of the independent claims (unless the application is a design application);

6.5. a showing of where each limitation of the claims finds support under 35 USC 112, first paragraph, in the written description of the specification. If applicable, the showing must also identify: (1) each means- (or step) plus-function claim element that invokes consideration under 35 UDC 112, sixth paragraph; and (2) the structure, material, or acts in the specification that corresponds to each means- (or step) plus-function claim element that invokes consideration under 35 UDC 112, sixth paragraph; if the application claims the benefit of one or more applications under title 35, United States Code, the showing must also include where each limitation of the claims finds support under 35 USC 112, first paragraph, in each such application in which such supports exists;

6.6. an identification of any cited references that may be disqualified under 35 USC 103(c).

The petition appears on its face to be filed without recognition of the August 25, 2006 policy change to the petition to make special program. A copy of Federal Register on June 26, 2006 (71 Fed. Reg. 36323) is being attached to the mailed decision for petitioner's review. Further guidance may be found at www.USPTO.gov under the accelerated examination link.

REVIEW OF FACTS

The petition fails to comply with conditions II: 5.1-5.3 and 6.1 - 6.6 above. Therefore, the petition fails to meet the required conditions to be accorded special status under the accelerated examination procedure.

Furthermore, regular examination has already begun and a final rejection was mailed on April 27, 2011 . Accordingly, no advantages or limitations of accelerated examination are accorded to the file, and the application is no longer eligible for the accelerated examination program.

Information about the current accelerated examination procedure may be obtained from the USPTO website at http://www.uspto.gov/web/patents/accelerated. Any inquiry regarding this decision should be directed to Colleen Dunn at (571) 272-1170.

/Colleen Dunn/

Colleen Dunn
Quality Assurance Specialist
Technology Center 2800

UNITED STATES PATENT AND TRADEMARK OFFICE

Commissioner for Patents
United States Patent and Trademark Office
P.O. Box 1450
Alexandria, VA 22313-1450
www.uspto.gov

Carestream Health, Inc.
ATTN: Patent Legal Staff
150 Verona Street
Rochester NY 14608

MAILED

FEB 10 2011

OFFICE OF PETITIONS

In re Application of:	:	
Jagannathan et al.	:	
Application No. 12/862986	:	DECISION GRANTING
Filing or 371(c) Date: 08/25/2010	:	PETITION UNDER
Title of Invention:	:	37 CFR 1.47(a)
DIGITAL RADIOGRAPHIC DETECTOR	:	
WITH BONDED PHOSPHOR LAYER	:	

This is in response to "Petition Under 37 CFR 1.47(a)," filed November 8, 2010, to allow the other inventor(s) to proceed with the application on behalf of himself or herself and the nonsigning inventor.

The petition is **granted**.

The above-identified application and papers have been reviewed and found in compliance with 37 CFR 1.47(a). This application is hereby accorded Rule 1.47(a) status.

Petitioner has shown that the non-signing inventor, Marcia K. Hansen, refuses to join in the application.

As provided in Rule 1.47(a), this Office will forward notice of this application's filing to the non-signing inventor at the addresses given in the Petition. Notice of the filing of this reissue application will also be published in the Official Gazette.

The application file is being referred to Technology Center Art Unit 2884 for examination in the normal course of business.

Telephone inquiries related to this decision may be directed to the undersigned at (571) 272-3232.

/DLW/

Derek L. Woods
Attorney
Office of Petitions

UNITED STATES PATENT AND TRADEMARK OFFICE

Commissioner for Patents
United States Patent and Trademark Office
P.O. Box 1450
Alexandria, VA 22313-1450
www.uspto.gov

MS. MARCIA K. HANSEN
7 WARRINGTON DRIVE
FAIRPORT, NY 14450-1171

MAILED

FEB 10 2011

OFFICE OF PETITIONS

In re Application of:	:	
Jagannathan et al.	:	
Application No. 12/862986	:	LETTER
Filing or 371(c) Date: 08/25/2010	:	
Title of Invention:	:	
DIGITAL RADIOGRAPHIC DETECTOR	:	
WITH BONDED PHOSPHOR LAYER	:	

Dear Ms. Hansen:

You are named as a joint inventor in the above-identified United States patent application filed under the provisions of 35 U.S.C. 116 (United States Code) and 37 CFR 1.47(a), Rules of Practice in Patent Cases. Should a patent be granted on the application you will be designated therein as a joint inventor.

As a named inventor you are entitled to inspect any paper in the file wrapper of the application, order copies of all or any part thereof (at a prepaid cost per 37 CFR 1.19) or make your position of record in the application. Alternatively, you may arrange to do any of the preceding through a registered patent attorney or agent presenting written authorization from you. If you care to join the application, counsel of record (see below) would presumably assist you. Joining in the application would entail the filing of an appropriate oath or declaration by you pursuant to 37 CFR 1.63.

Telephone inquiries regarding this communication should be directed to the undersigned at (571) 272-3232. Requests for information regarding your application should be directed to the File Information Unit at (703) 308-2733. Information regarding how to pay for and order a copy of the application, or a specific paper in the application, should be directed to Certification Division at (703) 308-9726 or 1-800-972-6382 (outside the Washington D.C. area).

/Derek L. Woods/
Derek L. Woods
Attorney
Office of Petitions

CC: Carestream Health, Inc.
ATTN: Patent Legal Staff
150 Verona Street
Rochester NY 14608

PTO/SB/20PCT-KR (06-10)
Approved for use through 01/31/2012. OMB 0651-0058
U.S. Patent and Trademark Office; U. S. DEPARTMENT OF COMMERCE
Under the Paperwork Reduction Act of 1995, no persons are required to respond to a collection of information unless it displays a valid OMB control number.

REQUEST FOR PARTICIPATION IN THE PATENT COOPERATION TREATY - PATENT PROSECUTION HIGHWAY (PCT-PPH) PILOT PROGRAM BETWEEN THE KOREAN INTELLECTUAL PROPERTY OFFICE (KIPO) AND THE USPTO

Application No:	12/863,003	Filing date:	September 2, 2010
First Named Inventor:	TIFFANY E. MILLER		
Title of the Invention:	NANOFILM PROTECTIVE AND RELEASE MATRICES		

THIS REQUEST FOR PARTICIPATION IN THE PCT-PPH PILOT PROGRAM ALONG WITH THE REQUIRED DOCUMENTS MUST BE SUBMITTED VIA EFS-WEB. INFORMATION REGARDING EFS-WEB IS AVAILABLE AT HTTP://WWW.USPTO.GOV/EBC/EFS_HELP.HTML

APPLICANT HEREBY REQUESTS PARTICIPATION IN THE PCT-PPH PROGRAM AND PETITIONS TO MAKE THE ABOVE-IDENTIFIED APPLICATION SPECIAL UNDER THE PCT-PPH PROGRAM.

The above-identified application is (1) a national stage entry of the corresponding PCT application, or (2) a national stage entry of another PCT application which claims priority to the corresponding PCT application, or (3) a national application that claims domestic/ foreign priority to the corresponding PCT application, or (4) a national application which forms the basis for the priority claim in the corresponding PCT application, or (5) a continuing application of a U.S. application that satisfies one of (1) to (4) above, or (6) a U.S. application that claims domestic benefit to a U.S. provisional application which forms the basis for the priority claim in the corresponding PCT application.

The corresponding PCT application number(s) is/are: PCT/US08/13918

The international filing date of the corresponding PCT application(s) is/are: DECEMBER 18, 2008

I. List of Required Documents:

a. **A copy of the latest international work product (WO/ISA, WO/IPEA, or IPER) in the above–identified corresponding PCT application(s)**

☐ Is attached.

☑ Is not attached because the document is already in the U.S. application.

b. **A copy of all claims which were indicated as having novelty, inventive step and industrial applicability in the above-identified corresponding PCT application(s).**

☐ Is attached.

☑ Is not attached because the document is already in the U.S. application.

c. **English translations of the documents in a. and b. above are attached (if the documents are not in the English language). A statement that the English translation is accurate is attached for the document in b. above.**

This collection of information is required by 35 U.S.C. 119, 37 CFR 1.55, and 37 CFR 1.102(d). The information is required to obtain or retain a benefit by the public, which is to file (and by the USPTO to process) an application. Confidentiality is governed by 35 U.S.C. 122 and 37 CFR 1.11 and 1.14. This collection is estimated to take 2 hours to complete, including gathering, preparing, and submitting the completed application form to the USPTO. Time will vary depending upon the individual case. Any comments on the amount of time you require to complete this form and/or suggestions for reducing this burden should be sent to the Chief Information Officer, U.S. Patent and Trademark Office, U.S. Department of Commerce. P.O. Box 1450, Alexandria, VA 22313-1450. DO NOT SEND FEES OR COMPLETED FORMS TO THIS ADDRESS.

Approved for use through 01/31/2012. OMB 0651-0058
U.S.Patent and Trademark Office; U.S. DEPARTMENT OF COMMERCE
Under the Paperwork Reduction Act of 1995, no persons are required to respond to a collection of information unless it displays a valid OMB control number.

REQUEST FOR PARTICIPATION IN THE PCT-PPH PILOT PROGRAM BETWEEN THE KIPO AND THE USPTO

(continued)

Application No.:	12/863,003
First Named Inventor:	TIFFANY E. MILLER

d. **(1) An information disclosure statement listing the documents cited in the international work products (ISR, WO/ISA, WO/IPEA, IPER) of the corresponding PCT application.**

☐ Is attached

☑ Has already been filed in the above-identified U.S. application on January 6, 2011

(2) Copies of all documents (except) for U.S. patents or U.S. patent application publications)

☐ Are attached.

☑ Have already been filed in the above-identified U.S. application on January 6, 2011

II. Claims Correspondence Table:

Claims in US Application	Patentable Claims in the corresponding PCT Application	Explanation regarding the correspondence
1-16	12-16	cancel claims 1-11

III. All the claims in the US application sufficiently correspond to the patentable claims in the corresponding PCT application.

Signature	Barbara S. Kitchell	Date	March 10, 2011
Name (Print/Typed)	BARBARA S. KITCHELL, PH.D.	Registration Number	33928

UNITED STATES PATENT AND TRADEMARK OFFICE

UNITED STATES DEPARTMENT OF COMMERCE
United States Patent and Trademark Office
Address: COMMISSIONER FOR PATENTS
P.O. Box 1450
Alexandria, Virginia 22313-1450
www.uspto.gov

APPLICATION NO.	FILING DATE	FIRST NAMED INVENTOR	ATTORNEY DOCKET NO.	CONFIRMATION NO.
12/863,003	09/02/2010	Tiffany E. Miller	IFC.130X	2839

23557 7590 03/14/2011
SALIWANCHIK, LLOYD & EISENSCHENK
A PROFESSIONAL ASSOCIATION
PO Box 142950
GAINESVILLE, FL 32614

EXAMINER

ART UNIT	PAPER NUMBER
3773	

NOTIFICATION DATE	DELIVERY MODE
03/14/2011	ELECTRONIC

Please find below and/or attached an Office communication concerning this application or proceeding.

The time period for reply, if any, is set in the attached communication.

Notice of the Office communication was sent electronically on above-indicated "Notification Date" to the following e-mail address(es):

euspto@slepatents.com

UNITED STATES PATENT AND TRADEMARK OFFICE

Commissioner for Patents
United States Patent and Trademark Office
P.O. Box 1450
Alexandria, VA 22313-1450
www.uspto.gov

SALIWANCHIK, LLOYD & EISENSCHENK
A PROFESSIONAL ASSOCIATION
PO Box 142950
GAINESVILLE FL 32614

In re Application of	:	
MILLER, TIFFANY E.	:	DECISION ON REQUEST TO
Application No. 12/863,003	:	PARTICIPATE IN PATENT
Filed: Sep. 2, 2010	:	PCT/PROSECUTION HIGHWAY
Attorney Docket No. IFC/130X	:	PROGRAM AND PETITION
Title: NANOFILM PROTECTIVE AND	:	TO MAKE SPECIAL UNDER
RELEASE MATRICES	:	37 CFR 1.102(a)

This is a decision on the request to participate in the Patent Prosecution Highway (PPH) program and the petition under 37 CFR 1.102(a), filed March 10, 2011, to make the above-identified application special.

The request and petition are dismissed.

A grantable request to participate in the PPH program and petition to make special require:
(1) The U.S. application must disclose an eligible relationship to one or more PCT applications filed in the KIPO, JPO, EPO or USPTO;
(2) Applicant must submit a copy of the allowable/patentable claim(s) from the PCT application(s) latest international work product (the written opinion or the IPER) along with an English translation thereof and a statement that the English translation is accurate;
(3) All the claims in the U.S. application must sufficiently correspond or be amended to sufficiently correspond to the allowable/patentable claim(s) in the PCT application(s);
(4) Examination of the U.S. application has not begun;
(5) Applicant must submit a copy of the latest international work product from the PCT application containing the allowable/patentable claim(s) along with an English translation thereof and a statement that the English translation is accurate; and
(6) Applicant must submit an IDS listing the documents cited by the PCT examiner in the international work product along with copies of documents except U.S. patents or U.S. patent application publications.

With regard to Items #2, #3 and #5, the applicant did not submit a copy of KIPO/PCT search opinion indicating claims 12-16 meet novelty, inventive step and industrial applicability. In the claims comparison, the applicant also indicated that claims 1-16 as filed on July 15, 2010 correspond to the PCT allowed claims 12-16. The applicant simply failed to provide a copy of allowable claims 12-16 from the KIPO or PCT search opinion. Therefore, claims 1-11 and 17 were not found allowable by the KIPO/PCT examiner. In order to grant the petition make special under PPH program, claims 1-11 and 17 must be cancelled.

Applicant is encouraged to cite and submit all relevant prior art references, if any, to facilitate examination in this application.

Applicant is given a time period of **ONE MONTH or THIRTY DAYS**, whichever is longer, from the mailing date of this decision to correct the deficiencies. **NO EXTENSION OF TIME UNDER 37 CFR 1.136 IS PERMITTED.** If the deficiencies are not corrected with the time period given, the application will await action in its regular turn. Response must be filed via EFS-Web. Currently, the application is undergoing pre-examination processing.

Telephone inquiries concerning this decision should be directed to Henry C. Yuen at 571-272-4856.

Petition is **dismissed**.

/Henry C. Yuen/

Henry C. Yuen, Special Programs Examiner
Technology Center 3700 – Mechanical Engineering,
Manufacturing and Products
571-272-4856

PTO/SB/20PCT-KR (06-10)
Approved for use through 01/31/2012. OMB 0651-0058
U.S. Patent and Trademark Office; U. S. DEPARTMENT OF COMMERCE
Under the Paperwork Reduction Act of 1995, no persons are required to respond to a collection of information unless it displays a valid OMB control number.

REQUEST FOR PARTICIPATION IN THE PATENT COOPERATION TREATY - PATENT PROSECUTION HIGHWAY (PCT-PPH) PILOT PROGRAM BETWEEN THE KOREAN INTELLECTUAL PROPERTY OFFICE (KIPO) AND THE USPTO

Application No:	12/863,003	Filing date:	September 2, 2010
First Named Inventor:	TIFFANY E. MILLER		
Title of the Invention:	NANOFILM PROTECTIVE AND RELEASE MATRICES		

THIS REQUEST FOR PARTICIPATION IN THE PCT-PPH PILOT PROGRAM ALONG WITH THE REQUIRED DOCUMENTS MUST BE SUBMITTED VIA EFS-WEB. INFORMATION REGARDING EFS-WEB IS AVAILABLE AT HTTP://WWW.USPTO.GOV/EBC/EFS_HELP.HTML

APPLICANT HEREBY REQUESTS PARTICIPATION IN THE PCT-PPH PROGRAM AND PETITIONS TO MAKE THE ABOVE-IDENTIFIED APPLICATION SPECIAL UNDER THE PCT-PPH PROGRAM.

The above-identified application is (1) a national stage entry of the corresponding PCT application, or (2) a national stage entry of another PCT application which claims priority to the corresponding PCT application, or (3) a national application that claims domestic/ foreign priority to the corresponding PCT application, or (4) a national application which forms the basis for the priority claim in the corresponding PCT application, or (5) a continuing application of a U.S. application that satisfies one of (1) to (4) above, or (6) a U.S. application that claims domestic benefit to a U.S. provisional application which forms the basis for the priority claim in the corresponding PCT application.

The corresponding PCT application number(s) is/are: PCT/US08/13918

The international filing date of the corresponding PCT application(s) is/are: DECEMBER 18, 2008

I. List of Required Documents:

a. **A copy of the latest international work product (WO/ISA, WO/IPEA, or IPER) in the above–identified corresponding PCT application(s)**

☑ Is attached.

☐ Is not attached because the document is already in the U.S. application.

b. **A copy of all claims which were indicated as having novelty, inventive step and industrial applicability in the above-identified corresponding PCT application(s).**

☑ Is attached.

☐ Is not attached because the document is already in the U.S. application.

c. **English translations of the documents in a. and b. above are attached (if the documents are not in the English language). A statement that the English translation is accurate is attached for the document in b. above.**

This collection of information is required by 35 U.S.C. 119, 37 CFR 1.55, and 37 CFR 1.102(d). The information is required to obtain or retain a benefit by the public, which is to file (and by the USPTO to process) an application. Confidentiality is governed by 35 U.S.C. 122 and 37 CFR 1.11 and 1.14. This collection is estimated to take 2 hours to complete, including gathering, preparing, and submitting the completed application form to the USPTO. Time will vary depending upon the individual case. Any comments on the amount of time you require to complete this form and/or suggestions for reducing this burden should be sent to the Chief Information Officer, U.S. Patent and Trademark Office, U.S. Department of Commerce, P.O. Box 1450, Alexandria, VA 22313-1450. DO NOT SEND FEES OR COMPLETED FORMS TO THIS ADDRESS.

Approved for use through 01/31/2012. OMB 0651-0058
U.S.Patent and Trademark Office; U.S. DEPARTMENT OF COMMERCE

Under the Paperwork Reduction Act of 1995, no persons are required to respond to a collection of information unless it displays a valid OMB control number.

REQUEST FOR PARTICIPATION IN THE PCT-PPH PILOT PROGRAM BETWEEN THE KIPO AND THE USPTO

(continued)

Application No.:	12/863,003
First Named Inventor:	TIFFANY E. MILLER

d. **(1) An information disclosure statement listing the documents cited in the international work products (ISR, WO/ISA, WO/IPEA, IPER) of the corresponding PCT application.**

☐ Is attached

☑ Has already been filed in the above-identified U.S. application on January 6, 2011

(2) Copies of all documents (except) for U.S. patents or U.S. patent application publications)

☐ Are attached.

☑ Have already been filed in the above-identified U.S. application on January 6, 2011

II. Claims Correspondence Table:

Claims in US Application	Patentable Claims in the corresponding PCT Application	Explanation regarding the correspondence
1-11	none	Canceled US claims 1-11 correspond to claims 1-11 in PCT
12-16	12-16	US claims 12-16 correspond to claims 12-16 in PCT
17	no	Canceled US claim 17 corresponds to claim 17 in PCT

III. All the claims in the US application sufficiently correspond to the patentable claims in the corresponding PCT application.

Signature /Barbara S. Kitchell/	Date March 25, 2011
Name (Print/Typed) BARBARA S. KITCHELL, PH.D.	Registration Number 33928

PATENT COOPERATION TREATY

PCT

INTERNATIONAL PRELIMINARY REPORT ON PATENTABILITY

(Chapter I of the Patent Cooperation Treaty)

(PCT Rule 44*bis*)

Applicant's or agent's file reference IFC-130 PCT	**FOR FURTHER ACTION**	See item 4 below
International application No. PCT/US2008/013918	International filing date *(day/month/year)* 18 December 2008 (18.12.2008)	Priority date *(day/month/year)* 18 January 2008 (18.01.2008)
International Patent Classification (8th edition unless older edition indicated) See relevant information in Form PCT/ISA/237		
Applicant CHAMELEON SCIENTIFIC CORPORATION		

1. This international preliminary report on patentability (Chapter I) is issued by the International Bureau on behalf of the International Searching Authority under Rule 44 *bis*.1(a).

2. This REPORT consists of a total of 6 sheets, including this cover sheet.

   In the attached sheets, any reference to the written opinion of the International Searching Authority should be read as a reference to the international preliminary report on patentability (Chapter I) instead.

3. This report contains indications relating to the following items:

☒	Box No. I	Basis of the report
☐	Box No. II	Priority
☐	Box No. III	Non-establishment of opinion with regard to novelty, inventive step and industrial applicability
☐	Box No. IV	Lack of unity of invention
☒	Box No. V	Reasoned statement under Article 35(2) with regard to novelty, inventive step or industrial applicability; citations and explanations supporting such statement
☐	Box No. VI	Certain documents cited
☐	Box No. VII	Certain defects in the international application
☒	Box No. VIII	Certain observations on the international application

4. The International Bureau will communicate this report to designated Offices in accordance with Rules 44*bis*.3(c) and 93*bis*.1 but not, except where the applicant makes an express request under Article 23(2), before the expiration of 30 months from the priority date (Rule 44*bis* .2).

	Date of issuance of this report 20 July 2010 (20.07.2010)
The International Bureau of WIPO 34, chemin des Colombettes 1211 Geneva 20, Switzerland Facsimile No. +41 22 338 82 70	Authorized officer Beate Giffo-Schmitt e-mail: pt03.pct@wipo.int

PATENT COOPERATION TREATY

From the
INTERNATIONAL SEARCHING AUTHORITY

To:
KITCHELL BARBARA S.

CHAMELEON SCIENTIFIC CORPORATION 13355 10TH AVE., NORTH, SUITE 108 PLYMOUTH MN 55441 USA

PCT

WRITTEN OPINION OF THE INTERNATIONAL SEARCHING AUTHORITY

(PCT Rule 43bis.1)

Date of mailing *(day/month/year)* **25 MAY 2009 (25.05.2009)**

Applicant's or agent's file reference
IFC-130 PCT

FOR FURTHER ACTION
See paragraph 2 below

International application No.	International filing date *(day/month/year)*	Priority date *(day/month/year)*
PCT/US2008/013918	**18 DECEMBER 2008 (18.12.2008)**	18 JANUARY 2008 (18.01.2008)

International Patent Classification (IPC) or both national classification and IPC

H01L 21/205(2006.01)i, C23C 16/50(2006.01)i, B32B 15/01(2006.01)i

Applicant

CHAMELEON SCIENTIFIC CORPORATION et al

1. This opinion contains indications relating to the following items:

- [x] Box No. I Basis of the opinion
- [ ] Box No. II Priority
- [ ] Box No. III Non-establishment of opinion with regard to novelty, inventive step and industrial applicability
- [ ] Box No. IV Lack of unity of invention
- [x] Box No. V Reasoned statement under Rule 43bis.1(a)(i) with regard to novelty, inventive step or industrial applicability; citations and explanations supporting such statement
- [ ] Box No. VI Certain documents cited
- [ ] Box No. VII Certain defects in the international application
- [x] Box No. VIII Certain observations on the international application

2. **FURTHER ACTION**
If a demand for international preliminary examination is made, this opinion will be considered to be a written opinion of the International Preliminary Examining Authority ("IPEA") except that this does not apply where the applicant chooses an Authority other than this one to be the IPEA and the chosen IPEA has notified the International Bureau under Rule 66.1bis(b) that written opinions of this International Searching Authority will not be so considered.

If this opinion is, as provided above, considered to be a written opinion of the IPEA, the applicant is invited to submit to the IPEA a written reply together, where appropriate, with amendments, before the expiration of 3 months from the date of mailing of Form PCT/ISA/220 or before the expiration of 22 months from the priority date, whichever expires later.
For further options, see Form PCT/ISA/220.

3. For further details, see notes to Form PCT/ISA/220.

Name and mailing address of the ISA/KR	Date of completion of this opinion	Authorized officer
Korean Intellectual Property Office Government Complex-Daejeon, 139 Seonsa-ro, Seo-gu, Daejeon 302-701, Republic of Korea Facsimile No. 82-42-472-7140	25 MAY 2009 (25.05.2009)	BAEK, Yang Gyu Telephone No.82-42-481-5732

WRITTEN OPINION OF THE INTERNATIONAL SEARCHING AUTHORITY

International application No.
PCT/US2008/013918

Box No. I Basis of this opinion

1. With regard to the **language**, this opinion has been established on the basis of :

   ☒ the international application in the language in which it was filed

   ☐ a translation of the international application into _____ , which is the language of a translation furnished for the purposes of international search (Rules 12.3(a) and 23.1(b))

2. ☐ This opinion has been established taking into account the **rectification of an obvious mistake** authorized by or notified to this Authority under Rule 91 (Rule 43*bis*.1(a))

3. With regard to any **nucleotide and/or amino acid sequence** disclosed in the international application, this opinion has been established on the basis of:

   a. type of material
   ☐ a sequence listing
   ☐ table(s) related to the sequence listing

   b. format of material
   ☐ on paper
   ☐ in electronic form

   c. time of filing/furnishing
   ☐ contained in the international application as filed.
   ☐ filed together with the international application in electronic form.
   ☐ furnished subsequently to this Authority for the purposes of search.

4. ☐ In addition, in the case that more than one version or copy of a sequence listing and/or table relating thereto has been filed or furnished, the required statements that the information in the subsequent or additioanl copies is identical to that in the application as filed or does not go beyond the application as filed, as appropriate, were furnished.

5. Additional comments:

WRITTEN OPINION OF THE INTERNATIONAL SEARCHING AUTHORITY

International application No.
PCT/US2008/013918

Box No. V Reasoned statement under Rule 43bis.1(a)(i) with regard to novelty, inventive step or industrial applicability; citations and explanations supporting such statement

1. Statement

Novelty (N)	Claims	1-16	YES
	Claims	NONE	NO
Inventive step (IS)	Claims	12-16	YES
	Claims	1-11	NO
Industrial applicability (IA)	Claims	1-16	YES
	Claims	NONE	NO

2. Citations and explanations :

The following documents are referred to

D1 : US 5234862 A
D2 : US 2003/0207593 A1

1. Novelty and Inventive step

1.1 Concerning Claims 1-11

The subject matter of claim 1 is a method for preparing a nonconformal, amorphous metal oxide surface film, comprising: (a) evacuating a heated reaction chamber, (b) introducing an oxygen source, (c) releasing the vacuum, (d) introducing a volatile metal based precursor, and repeating steps (a)-(d).

D1, which is considered to be the closest prior art to the subject matter of claim 1, discloses evacuating the vacuum chamber, supplying a reactant gas, and setting the pressure within a vacuum vessel. However, Claim 1 differs from D1 in that D1 does not disclose introducing a volatile metal based precursor and repeating steps. D2 teachs the concept of repeating to produce a metal oxide layer having sufficient thickness. Accordingly, claim 1 would have been obvious over D1 in view of D2. Therefore, claim 1 lacks an inventive step under PCT Article 33(3)

The additional features of claims 2-11 dependent on claim 1 relate to a source and thickness, temperatures of processing that are similar to the content of D1 and D2. Accordingly, claims 2-11 would have been obvious over D1 in view of D2. Therefore, claims 2-11 lack an inventive step under PCT Article 33(3).

1.2 Concerning Claims 12-16

The subject matter of claim 12 is a controlled release surface, comprising a bilmolecule deposited on or attached to a substrate surface, an atomic plasma deposited (APD) nonconformal, porous titania or alumina, and optionally multilayer deposited biomolecules.

When comparing the subject matter of claim 12 with D1, the optionally multilayer deposited biamolecules is not disclosed in D1. Accordingly, it would not have been obvious to a person skilled in the art to apply the knowledge of this document individually or in combination, thereby arriving at the invention claimed in claim 12. Therefore, claim 12 meets the requirements of PCT Article 33(2) and (3).

(Continued on the supplemental Box.)

WRITTEN OPINION OF THE INTERNATIONAL SEARCHING AUTHORITY

International application No.

PCT/US2008/013918

Box No. VIII Certain observations on the international application

The following observations on the clarity of the claims, description, and drawings or on the question whether the claims are fully supported by the description, are made:

1. In the definition of the invention given in Claim 17, the claim as awhole is not clear. (PCT Article 6).

WRITTEN OPINION OF THE INTERNATIONAL SEARCHING AUTHORITY

International application No.

PCT/US2008/013918

Supplemental Box

In case **the space in any of the preceding boxes is not sufficient.**
Continuation of :

Box No. V

Since claims 13-16 are dependent claims, they also meet the criteria of novelty and inventive step. (PCT Articles 33(2) and (3))

2. Industrial Applicability

The present invention is industrially applicable to meet the criteria of PCT Article 33(4).

INTERNATIONAL SEARCH REPORT

International application No.
PCT/US2008/013918

A. CLASSIFICATION OF SUBJECT MATTER

H01L 21/205(2006.01)i, C23C 16/50(2006.01)i, B32B 15/01(2006.01)i

According to International Patent Classification (IPC) or to both national classification and IPC

B. FIELDS SEARCHED

Minimum documentation searched (classification system followed by classification symbols)
IPC H01L 21/205

Documentation searched other than minimum documentation to the extent that such documents are included in the fields searched
Korean Utility models and applications for Utility models since 1975
Japanese Utility models and applications for Utility models since 1975

Electronic data base consulted during the international search (name of data base and, where practicable, search terms used)
e-KIPASS (KIPO Internal); "vacuum", "ALD", "precursor"

C. DOCUMENTS CONSIDERED TO BE RELEVANT

Category*	Citation of document, with indication, where appropriate, of the relevant passages	Relevant to claim No.
Y	US 5234862 A (KEN ICHI AKETAGAWA et al.) 10 August 1993 see the abstract, claim 1	1-11
Y	US 2003/0207593 A1 (GARO J. DERDERIAN et al.) 06 November 2003 see the abstract, Fig. 1	1-11
A		12-16
A	US 6511539 B1 (IVO RAAIJMAKERS) 28 January 2003 see the abstract, claim 19	1-16

☐ Further documents are listed in the continuation of Box C. ☒ See patent family annex.

* Special categories of cited documents:
"A" document defining the general state of the art which is not considered to be of particular relevance
"E" earlier application or patent but published on or after the international filing date
"L" document which may throw doubts on priority claim(s) or which is cited to establish the publication date of citation or other special reason (as specified)
"O" document referring to an oral disclosure, use, exhibition or other means
"P" document published prior to the international filing date but later than the priority date claimed
"T" later document published after the international filing date or priority date and not in conflict with the application but cited to understand the principle or theory underlying the invention
"X" document of particular relevance; the claimed invention cannot be considered novel or cannot be considered to involve an inventive step when the document is taken alone
"Y" document of particular relevance; the claimed invention cannot be considered to involve an inventive step when the document is combined with one or more other such documents, such combination being obvious to a person skilled in the art
"&" document member of the same patent family

Date of the actual completion of the international search	Date of mailing of the international search report
25 MAY 2009 (25.05.2009)	**25 MAY 2009 (25.05.2009)**
Name and mailing address of the ISA/KR Korean Intellectual Property Office Government Complex-Daejeon, 139 Seonsa-ro, Seo-gu, Daejeon 302-701, Republic of Korea Facsimile No. 82-42-472-7140	Authorized officer BAEK, Yang Gyu Telephone No. 82-42-481-5732

INTERNATIONAL SEARCH REPORT

Information on patent family members

International application No.

PCT/US2008/013918

Patent document cited in search report	Publication date	Patent family member(s)	Publication date
US 5234862 A	10.08.1993	CA 2051554 A1	22.03.1992
		CA 2051554 C	24.08.1999
		DE 69106091 D1	02.02.1995
		EP 0476676 A2	25.03.1992
		EP 0476676 B1	21.12.1994
		EP 0476676 A2	25.03.1992
		EP 0476676 A3	15.04.1992
		EP 0476676 B1	21.12.1994
		JP 05-251355	28.09.1993
		JP 2000-100727	07.04.2000
		JP 2000-100727 A	07.04.2000
		KR 10-1992-0007169	28.04.1992
		KR 9703897 B1	22.03.1997
US 2003-207593 A1	06.11.2003	NONE	
US 6511539 B1	28.01.2003	EP 1216106 A1	26.06.2002
		JP 2003-508932	04.03.2003
		KR 10-2002-0046282	20.06.2002
		TW 527224 B	11.04.2003
		US 6764546	20.07.2004
		US 7141499	28.11.2006
		US 7431767	07.10.2008
		US 2003-0089308 A1	15.05.2003
		US 2003-0101927 A1	05.06.2003
		WO 01-17692 A1	15.03.2001
		WO 01-17692 A9	03.10.2002

UNITED STATES PATENT AND TRADEMARK OFFICE

UNITED STATES DEPARTMENT OF COMMERCE
United States Patent and Trademark Office
Address: COMMISSIONER FOR PATENTS
P.O. Box 1450
Alexandria, Virginia 22313-1450
www.uspto.gov

APPLICATION NO.	FILING DATE	FIRST NAMED INVENTOR	ATTORNEY DOCKET NO.	CONFIRMATION NO.
12/863,003	09/02/2010	Tiffany E. Miller	IFC.130X	2839

23557 7590 03/29/2011
SALIWANCHIK, LLOYD & EISENSCHENK
A PROFESSIONAL ASSOCIATION
PO Box 142950
GAINESVILLE, FL 32614

EXAMINER	
ART UNIT	PAPER NUMBER
3773	

NOTIFICATION DATE	DELIVERY MODE
03/29/2011	ELECTRONIC

Please find below and/or attached an Office communication concerning this application or proceeding.

The time period for reply, if any, is set in the attached communication.

Notice of the Office communication was sent electronically on above-indicated "Notification Date" to the following e-mail address(es):

euspto@slepatents.com

UNITED STATES PATENT AND TRADEMARK OFFICE

Commissioner for Patents
United States Patent and Trademark Office
P.O. Box 1450
Alexandria, VA 22313-1450
www.uspto.gov

SALIWANCHIK, LLOYD & EISENSCHENK
A PROFESSIONAL ASSOCIATION
PO Box 142950
GAINESVILLE FL 32614

In re Application of	:	
MILLER, TIFFANY E.	:	DECISION ON REQUEST TO
Application No. 12/863,003	:	PARTICIPATE IN PATENT
Filed: Sep. 2, 2010	:	PCT/PROSECUTION HIGHWAY
Attorney Docket No. IFC/130X	:	PROGRAM AND PETITION
Title: NANOFILM PROTECTIVE AND	:	TO MAKE SPECIAL UNDER
RELEASE MATRICES	:	37 CFR 1.102(a)

This is a decision on the renewed request to participate in the Patent Prosecution Highway (PPH) program and the petition under 37 CFR 1.102(a), filed March 25, 2011, to make the above-identified application special.

The request and petition are granted.

A grantable request to participate in the PPH program and petition to make special require:
(1) The U.S. application must disclose an eligible relationship to one or more PCT applications filed in the KIPO, JPO, EPO or USPTO;
(2) Applicant must submit a copy of the allowable/patentable claim(s) from the PCT application(s) latest international work product (the written opinion or the IPER) along with an English translation thereof and a statement that the English translation is accurate;
(3) All the claims in the U.S. application must sufficiently correspond or be amended to sufficiently correspond to the allowable/patentable claim(s) in the PCT application(s);
(4) Examination of the U.S. application has not begun;
(5) Applicant must submit a copy of the latest international work product from the PCT application containing the allowable/patentable claim(s) along with an English translation thereof and a statement that the English translation is accurate; and
(6) Applicant must submit an IDS listing the documents cited by the PCT examiner in the international work product along with copies of documents except U.S. patents or U.S. patent application publications.

In light of the petition being properly submitted, the request to participate in the PPH program and the petition comply with the above requirements. Accordingly, the above-identified application has been accorded "special" status.

The applicant is encouraged to cite and submit all relevant prior art references, if any, to facilitate examination in this application.

Other inquiries concerning the examination or status of the application should be directed to Jackie Ho, the SPE of Art Unit 3773 at 571-272-4696 for Class 623/23 and also accessible in the PAIR system at http://www.uspto.gov/ebc.index.html.

All other inquiries concerning the examination or status of the application should be directed to the Patent Application Information Retrieval (PAIR) system.

This application will be forwarded and docketed to an examiner for action on the merits commensurate with this decision.

Telephone inquiries concerning this decision should be directed to Henry C. Yuen, at 571-272-4856.

The petition is **granted.**

/Henry C. Yuen/

Henry C. Yuen, Special Programs Examiner
Technology Center 3700 – Mechanical Engineering,
Manufacturing and Products
571-272-4856

UNITED STATES PATENT AND TRADEMARK OFFICE

Commissioner for Patents
United States Patent and Trademark Office
P.O. Box 1450
Alexandria, VA 22313-1450
www.uspto.gov

82727
Jae Y. Park
KILE PARK GOEKJIAN REED & MCMANUS PLLC
1200 New Hampshire Ave., NW, Suite 570
Washington, DC 20036

MAILED

APR 27 2011

PCT LEGAL ADMINISTRATION

In re Application of
KUROKAWA *et al*
U.S. Application No.: 12/863,005
PCT No.: PCT/JP2008/071742
Int. Filing Date: 30 November 2008
Priority Date: 15 January 2008
Docket No.: KBT-0010-SE
For: FREQUENCY DETECTION DEVICE, FREQUENCY DETECTION METHOD, CIRCUIT CONTROL DEVICE, CIRCUIT CONTROL METHOD, DELAY CIRCUIT CONTROL METHOD, AND DELAY CIRCUIT SYSTEM

DECISION ON PETITION UNDER 37 CFR 1.137(b)

Applicants' petition to revive under 37 CFR 1.137(b) filed on 15 February 2011 is hereby **GRANTED** as follows:

The Basic National fee and the petition fee for a small entity have been paid. Applicants made the required statement pursuant to 37 CFR 1.137(b)(3). A terminal disclaimer is not required. Accordingly, all requirements under 37 CFR 1.137(b) have been satisfied.

This application is being forwarded to the United States Designated/Elected Office for further processing.

James Thomson
Attorney Advisor
Office of PCT Legal Administration

Tel.: (571) 272-3302

UNITED STATES PATENT AND TRADEMARK OFFICE

Commissioner for Patents
United States Patent and Trademark Office
P.O. Box 1450
Alexandria, VA 22313-1450
www.uspto.gov

OLIFF & BERRIDGE, PLC
P.O. BOX 320850
ALEXANDRIA VA 22320-4850

MAILED
APR 06 2012
OFFICE OF PETITIONS

In re Application of
Masachika Kamiya
Application No.: 12/863,023
Filed: July 15, 2010
Attorney Docket No.: 146157
For: Door Courtesy Switch Abnormality Detection Apparatus and Method

: DECISION ON REQUEST TO
: PARTICIPATE IN THE PATENT
: PROSECUTION HIGHWAY
: PROGRAM AND PETITION
: TO MAKE SPECIAL UNDER
: 37 CFR 1.102(a)

This is a decision on the request to participate in the Patent Prosecution Highway (PPH) program and the petition under 37 CFR 1.102(a), filed March 23, 2012, to make the above-identified application special.

The request and petition are **GRANTED**.

DISCUSSION

A grantable request to participate in the PPH pilot program and petition to make special require:

1. The U.S. application is
    a. a Paris Convention application which either
        i. validly claims priority under 35 U.S.C. 119(a) and 37 CFR 1.55 to one or more applications filed in the JPO, or
        ii. validly claims priority to a PCT application that contains no priority claims, or
    b. a national stage application under the PCT (an application which entered the national stage in the U.S. from a PCT international application after compliance with 35 U.S.C. 371), which PCT application
        i. validly claims priority to an application filed in the JPO, or
        ii. validly claims priority to a PCT application that contains no priority claims, or
        iii. contains no priority claim, or
    c. a so-called bypass application filed under 35 U.S.C. 111(a) which validly claims benefit under 35 U.S.C. 120 to a PCT application, which PCT application

i. validly claims priority to an application filed in the JPO, or
ii. validly claims priority to a PCT application that contains no priority claims, or
iii. contains no priority claim;

2. Applicant must:
   a. Ensure all the claims in the U.S. application must sufficiently correspond or be amended to sufficiently correspond to the allowable/patentable claim(s) in the JPO application(s) and
   b. Submit a claims correspondence table in English;
3. Examination of the U.S. application has not begun;
4. Applicant must submit:
   a. Documentation of prior office action:
      i. a copy of the office action(s) just prior to the "Decision to Grant a Patent" from each of the JPO application(s) containing the allowable/patentable claim(s) or
      ii. if the allowable/patentable claims(s) are from a "Notification of Reasons for Refusal" then the Notification of Reasons for Refusal or
      iii. if the JPO application is a first action allowance then no office action from the JPO is necessary should be indicated on the request/petition form;
5. Applicant must submit:
   a. An IDS listing the documents cited by the JPO examiner in the JPO office action (unless already submitted in this application)
   b. Copies of the documents except U.S. patents or U.S. patent application publications (unless already submitted in this application);

The request to participate in the PPH pilot program and petition comply with the above requirements. Accordingly, the above-identified application has been accorded "special" status.

Telephone inquiries concerning this decision should be directed to Kimberly Inabinet at (571) 272-4618.

All other inquiries concerning the examination or status of the application is accessible in the PAIR system at http://www.uspto.gov/ebc.index.html.

This application will be forwarded to the examiner for action on the merits commensurate with this decision.

Thurman K Page

Thurman K. Page
Petitions Examiner
Office of Petitions

03 SEP 2010

UNITED STATES PATENT AND TRADEMARK OFFICE

Commissioner for Patents
United States Patent and Trademark Office
P.O. Box 1450
Alexandria, VA 22313-1450
www.uspto.gov

FINNEGAN, HENDERSON, FARABOW, GARRETT & DUNNER
901 NEW YORK AVENUE, NW
WASHINGTON DC 20001-4413

In re Application of XU	:	
Application No.: 12/863,103	:	DECISION ON
PCT No.: PCT/CN08/72244	:	
Int. Filing: 02 September 2008	:	PETITION TO REVIVE
Priority Date: 19 September 2007	:	
Attorney Docket No.: 11005.0416	:	UNDER 37 CFR 1.137(b)
For: METHOD, SYSTEM AND EQUIPMENT FOR	:	
ROUTE MAINTAINING	:	

The petition to revive under 37 CFR 1.137(b) filed 15 July 2010 in the above captioned application is hereby **GRANTED** as follows:

Applicant's statement that "the entire delay in filing the required papers and fee from the due date for the required papers and fee until the filing of this petition, was unintentional" has been interpreted as meaning that "the entire delay in filing the required reply from the due date for the reply until the filing of this petition under 37 CFR 1.137(b) was unintentional" as required by 37 CFR 1.137(b)(3) at the time of filing this petition. If this is an incorrect interpretation in view of the rules, petitioner is required to promptly notify this office. The petition fee was paid. Applicant submitted the basic national fee and the executed declaration, in compliance with 37 CFR 1.497(a) and (b).

This application is being referred to the National Stage Processing Branch of the Office of PCT Operations for further processing. The 35 U.S.C. 371(c)(1), (c)(2) and (c)(4) date is 23 July 2010.

/Cynthia M. Kratz/

Cynthia M. Kratz

Attorney Advisor

PCT Legal Office

Office of PCT Legal Administration

Telephone: (571) 272-3286

UNITED STATES PATENT AND TRADEMARK OFFICE

Commissioner for Patents
United States Patent and Trademark Office
P.O. Box 1450
Alexandria, VA 22313-1450
www.uspto.gov

PATENT GC LLC
C/O CPA GLOBAL
P.O. BOX 52050
MINNEAPOLIS MN 55402

MAILED

AUG 22 2011

OFFICE OF PETITIONS

In re Application of :
Toga, et al. :
Application No. 12/863,118 : DECISION
Filed: 15 July, 2010 :
Attorney Docket No. vivoxi01.009 :

This is a decision on the petition filed on 10 August, 2011, for revival of an application abandoned due to unintentional delay pursuant to 37 C.F.R. §1.137(b) .

NOTE:

The address on the petition is other than that of record.

If Petitioner desires to receive future correspondence regarding this application, the appropriate power of attorney documentation must be submitted.

A courtesy copy of this decision will be mailed to Petitioner.

However, all future correspondence will be directed to the address of record until such time as appropriate instructions are received to the contrary.

The petition pursuant to 37 C.F.R. §1.137(b) is **GRANTED**.

As to the Allegations
of Unintentional Delay

The requirements of a grantable petition pursuant to 37 C.F.R. §1.137(b) are the petition and fee therefor, a reply, a proper statement and/or showing of unintentional delay under the regulation, and, where applicable, a terminal disclaimer and fee

Petitioners' attentions always are directed to the guidance in the Commentary at MPEP §711.03(c)(II).

BACKGROUND

Petitioner failed to reply timely and properly to the Notice to File Missing Parts mailed on 21 December, 2010, with reply due absent extension of time on or before 21 February, 2011, and the Notice of Incomplete Reply mailed on 10 March, 2011.

The application went abandoned after midnight 21 February, 21011.

The Office mailed the Notice of Abandonment on 27 July, 2011.

On 10 August, 2011, Petitioner filed, *inter alia*, a petition pursuant to 37 C.F.R. §1.137(b), with fee, a reply in the form of, *inter alia*, fees/, surcharge, and made the statement of unintentional delay. For reasons not apparent in the record, Petitioner also filed a terminal disclaimer and fee—because Petitioner's purpose is unclear, no action is taken on this element of the submission. Petitioner may wish to address this with the Office of Patent Application Processing and/or the Technology Center.

Petitioners' attentions always are directed to the guidance in the Commentary at MPEP §711.03(c) as to the showing regarding unintentional delay and a petition pursuant to 37 C.F.R. §1.137(b).

The availability of applications and application papers online to applicants/practitioners who diligently associate their Customer Number with the respective application(s) now provides an applicant/practitioner on-demand information as to events/transactions in an application.

Out of an abundance of caution, Petitioners always are reminded that those registered to practice and all others who make representations before the Office **must** inquire into the underlying facts of representations made to the Office and support averments with the appropriate documentation–since all owe to the Office the continuing duty to disclose.[1]

STATUTES, REGULATIONS AND ANALYSIS

Congress has authorized the Commissioner to revive an application if the delay is shown to the satisfaction of the Commissioner to have been "unavoidable." 35 U.S.C. §133 (1994).[2]

---

[1] See supplement of 17 June, 1999. The Patent and Trademark Office is relying on petitioner's duty of candor and good faith and accepting a statement made by Petitioner. See Changes to Patent Practice and Procedure, 62 Fed. Reg. at 53160 and 53178, 1203 Off. Gaz. Pat. Office at 88 and 103 (responses to comments 64 and 109)(applicant obligated under 37 C.F.R. §10.18 to inquire into the underlying facts and circumstances when providing statements to the Patent and Trademark Office).

[2] 35 U.S.C. §133 provides:

35 U.S.C. §133 Time for prosecuting application.

Upon failure of the applicant to prosecute the application within six months after any action therein, of which notice has been given or mailed to the applicant, or within such shorter time, not less than thirty days, as fixed by the Commissioner in such action, the application shall be regarded as abandoned by the parties thereto, unless it be shown to the satisfaction of the Commissioner that such delay was unavoidable.

The regulations at 37 C.F.R. §1.137(a) and (b) set forth the requirements for a Petitioner to revive a previously unavoidably or unintentionally, respectively, abandoned application under this congressional grant of authority.

Unintentional delays are those that do not satisfy the very strict statutory and regulatory requirements of unavoidable delay, and, by definition, are not intentional.[3]))

As to Allegations of
Unintentional Delay

The requirements of a grantable petition pursuant to 37 C.F.R. §1.137(b) are the petition and fee therefor, a reply, a proper statement of unintentional delay under the regulation, and, where applicable, a terminal disclaimer and fee.

It appears that the requirements under the rule have been satisfied.

CONCLUSION

Accordingly, the petition pursuant to 37 C.F.R. §1.137(b) is **granted**.

The instant application is released to the Office of Patent Application Processing (OPAP) for further processing in due course.

Petitioner may find it beneficial to view Private PAIR within a fortnight of the instant decision to ensure that the revival has been acknowledged by the OPAP in response to this decision. It is noted that all inquiries with regard to status need be directed to the OPAP where that change of status must be effected—that does not occur in the Office of Petitions.

[3] Therefore, by example, an unintentional delay in the reply might occur if the reply and transmittal form are to be prepared for shipment by the US Postal Service, but other pressing matters distract one's attention and the mail is not timely deposited for shipment.

Telephone inquiries regarding this decision may be directed to the undersigned at (571) 272-3214—it is noted, however , that all practice before the Office is in writing (see: 37 C.F.R. §1.2[4]) and the proper authority for action on any matter in this regard are the statutes (35 U.S.C.), regulations (37 C.F.R.) and the commentary on policy (MPEP). Therefore, no telephone discussion may be controlling or considered authority for Petitioner's action(s).

/John J. Gillon, Jr./
John J. Gillon, Jr.
Senior Attorney
Office of Petitions

CC
PATENT GC LLC
176 FEDERAL STREET/5TH FLOOR
BOSTON, MA 02110

[4] The regulations at 37 C.F.R. §1.2 provide:
§1.2 Business to be transacted in writing.
All business with the Patent and Trademark Office should be transacted in writing. The personal attdance of applicants or their attorneys or agents at the Patent and Trademark Office is unnecessary. The action of the Patent and Trademark Office will be based exclusively on the written record in the Office. No attention will be paid to any alleged oral promise, stipulation, or understanding in relation to which there is disagreement or doubt.

UNITED STATES PATENT AND TRADEMARK OFFICE

Commissioner for Patents
United States Patent and Trademark Office
P.O. Box 1450

MAILED
MAR 12 2012
OFFICE OF PETITIONS

BIRCH STEWART KOLASCH & BIRCH
PO BOX 747
FALLS CHURCH VA 22040-0747

In re Application of	: DECISION ON REQUEST TO
Shigeto SUZUKI et al.	: PARTICIPATE IN PPH PROGRAM
Application No. 12/863,147	: AND PETITION TO MAKE SPECIAL
Filed: July 15, 2010	: UNDER 37 CFR 1.102(a)
Atty. Docket No.: 1609-0271PUS1	:

For: RADIO COMMUNICATION SYSTEM, RECEPTION DEVICE, MOBILE STATION DEVICE, TRANSMISSION DEVICE, BASE STATION DEVICE, TRANSMISSION/RECEPTION DEVICE CONTROL METHOD, AND TRANSMISSION/RECEPTION DEVICE CONTROL PROGRAM

This is a decision on the request to participate in the Patent Prosecution Highway (PPH) program and the petition under 37 CFR 1.102(a), filed February 10, 2012 to make the above-identified application special.

The petition and request are **GRANTED**.

A grantable request to participate in the PPH (patent prosecution highway) program and petition to make special require:

1. The U.S. application is a Paris convention application that either validly claims priority under 35 U.S.C. 119(a) and 37 CFR 1.55 to one or more application filed in the JPO or to a PCT application that contains no priority claims, or is a national stage application under the PCT that either validly claims priority to an application filed in the JPO or to a PCT application that contains no priority claims, or that contains no priority claim, or is a bypass application filed under 35 U.S.C. 111(a) which validly claims benefit under 35 U.S.C. 120 to a PCT application that validly claims priority to an application filed in the JPO, to a PCT application that contains no priority claims, or contain no priority claim;

2. Applicant must ensure all the claims in the U.S. application sufficiently correspond or amended to sufficiently correspond to the allowable/patentable claim(s) in the JPO application and submit a claim correspondence table in English;

3. Examination of the U.S. application has not begun;

4. Applicant must submit a copy of the office action(s) just prior to the "Decision to Grant a Patent" from each of the JPO application(s) containing the allowable/patentable claim(s), or if the allowable/patentable claim(s) are from a "Notification of Reasons for Refusal" then the Notification of Reasons for Refusal, or if the JPO application is a first action allowance then no office action from the JPO is necessary should be indicated on the request/petition form, and an English language translation of the JPO Office action if submitted; and

5. Applicant must submit an IDS listing the documents cited by the JPO examiner in the JPO office action, unless already submitted in this application, and copies of the documents except U.S. patents or U.S. patent application publications, unless already submitted in this application.

The request to participate in the PPH program and petition comply with the above requirements. Accordingly, the above-identified application has been accorded "special" status.

Telephone inquiries concerning this decision should be directed to Robert DeWitty, Petition Attorney, Office of Petitions at 571-272-8427.

All other inquiries concerning the examination or status of the application is accessible in the PAIR system at http://www.uspto.gov/ebc/index.html.

This application will be forwarded to Technology Center Art Unit 2617 for action commensurate with this decision.

David Bucci
Petitions Examiner
Office of Petitions

Doc Code: PPH.PCT.652
Document Description: Petition to make special under PCT-Patent Pros Hwy

PTO/SB/20PCT-EP (05-10)
Approved for use through 01/31/2012. OMB 0651-0058
U.S. Patent and Trademark Office; U. S. DEPARTMENT OF COMMERCE
Under the Paperwork Reduction Act of 1995, no persons are required to respond to a collection of information unless it displays a valid OMB control number.

REQUEST FOR PARTICIPATION IN THE PATENT COOPERATION TREATY - PATENT PROSECUTION HIGHWAY (PCT-PPH) PILOT PROGRAM BETWEEN THE EUROPEAN PATENT OFFICE (EPO) AND THE USPTO

Application No:	12/863,157	Filing date:	July 15, 2010
First Named Inventor:	Manfred FAERBER		
Title of the Invention:	MECHANISM FOR AN ADJUSTABLE BODY COMPONENT OF A VEHICLE		

THIS REQUEST FOR PARTICIPATION IN THE PCT-PPH PILOT PROGRAM ALONG WITH THE REQUIRED DOCUMENTS MUST BE SUBMITTED VIA EFS-WEB. INFORMATION REGARDING EFS-WEB IS AVAILABLE AT HTTP://WWW.USPTO.GOV/EBC/EFS_HELP.HTML

APPLICANT HEREBY REQUESTS PARTICIPATION IN THE PCT-PPH PROGRAM AND PETITIONS TO MAKE THE ABOVE-IDENTIFIED APPLICATION SPECIAL UNDER THE PCT-PPH PROGRAM.

The above-identified application is (1) a national stage entry of the corresponding PCT application, or (2) a national stage entry of another PCT application which claims priority to the corresponding PCT application, or (3) a national application that claims domestic/ foreign priority to the corresponding PCT application, or (4) a national application which forms the basis for the priority claim in the corresponding PCT application, or (5) a continuing application of a U.S. application that satisfies one of (1) to (4) above, or (6) a U.S. application that claims domestic benefit to a U.S. provisional application which forms the basis for the priority claim in the corresponding PCT application.

The corresponding PCT application number(s) is/are: PCT/EP2010/000012

The international filing date of the corresponding PCT application(s) is/are: January 5, 2010

I. List of Required Documents:

a. A copy of the latest international work product (WO/ISA, WO/IPEA, or IPER) in the above–identified corresponding PCT application(s)

☐ Is attached.

☒ Is not attached because the document is already in the U.S. application.

b. A copy of all claims which were indicated as having novelty, inventive step and industrial applicability in the above-identified corresponding PCT application(s).

☐ Is attached.

☒ Is not attached because the document is already in the U.S. application.

c. English translations of the documents in a. and b. above are attached (if the documents are not in the English language). A statement that the English translation is accurate is attached for the document in b. above.

This collection of information is required by 35 U.S.C. 119, 37 CFR 1.55, and 37 CFR 1.102(d). The information is required to obtain or retain a benefit by the public, which is to file (and by the USPTO to process) an application. Confidentiality is governed by 35 U.S.C. 122 and 37 CFR 1.11 and 1.14. This collection is estimated to take 2 hours to complete, including gathering, preparing, and submitting the completed application form to the USPTO. Time will vary depending upon the individual case. Any comments on the amount of time you require to complete this form and/or suggestions for reducing this burden should be sent to the Chief Information Officer, U.S. Patent and Trademark Office, U.S. Department of Commerce, P.O. Box 1450, Alexandria, VA 22313-1450. DO NOT SEND FEES OR COMPLETED FORMS TO THIS ADDRESS.

PTO/SB/20PCT-EP (05-10)
Approved for use through 01/31/2012. OMB 0651-0058
U.S. Patent and Trademark Office; U. S. DEPARTMENT OF COMMERCE
Under the Paperwork Reduction Act of 1995, no persons are required to respond to a collection of information unless it displays a valid OMB control number.

REQUEST FOR PARTICIPATION IN THE PCT-PPH PILOT PROGRAM BETWEEN THE EPO AND THE USPTO

(continued)

Application No.:	12/863,157
First Named Inventor:	Manfred FAERBER

d. **(1) An information disclosure statement listing the documents cited in the international work products (ISR, WO/ISA, WO/IPEA, IPER) of the corresponding PCT application.**

☐ Is attached

☒ Has already been filed in the above-identified U.S. application on July 15, 2010

(2) Copies of all documents (except) for U.S. patents or U.S. patent application publications)

☐ Are attached.

☒ Have already been filed in the above-identified U.S. application on July 15, 2010

II. Claims Correspondence Table:

Claims in US Application	Patentable Claims in the corresponding PCT Application	Explanation regarding the correspondence
22	1	corresponding claim as amended in PCT May 28, 2010 from original claim 10
23	2	corresponding claim as amended in PCT May 28, 2010
24	3	corresponding claim as amended in PCT May 28, 2010
25	4	corresponding claim as amended in PCT May 28, 2010
26	5	corresponding claim as amended in PCT May 28, 2010
27	6	corresponding claim as amended in PCT May 28, 2010
28	7	corresponding claim as amended in PCT May 28, 2010
29	8	corresponding claim as amended in PCT May 28, 2010
30	9	corresponding claim as amended in PCT May 28, 2010
31	10	corresponding claim as amended in PCT May 28, 2010
32	11	corresponding claim as amended in PCT May 28, 2010
33	12	corresponding claim as amended in PCT May 28, 2010
34	13	corresponding claim as amended in PCT May 28, 2010
35	14	corresponding claim as amended in PCT May 28, 2010
36	15	corresponding claim as amended in PCT May 28, 2010

III. All the claims in the US application sufficiently correspond to the patentable claims in the corresponding PCT application.

Signature	John M. Naber	Date	February 18, 2011
Name (Print/Typed)	John M. Naber	Registration Number	46,487

UNITED STATES PATENT AND TRADEMARK OFFICE

UNITED STATES DEPARTMENT OF COMMERCE
United States Patent and Trademark Office
Address: COMMISSIONER FOR PATENTS
P.O. Box 1450
Alexandria, Virginia 22313-1450
www.uspto.gov

APPLICATION NO.	FILING DATE	FIRST NAMED INVENTOR	ATTORNEY DOCKET NO.	CONFIRMATION NO.
12/863,157	08/04/2010	Manfred Färber	8953-98196	3911

42798 7590 03/24/2011
FITCH, EVEN, TABIN & FLANNERY
P. O. BOX 18415
WASHINGTON, DC 20036

EXAMINER
PEDDER, DENNIS H.

ART UNIT	PAPER NUMBER
3612	

MAIL DATE	DELIVERY MODE
03/24/2011	PAPER

Please find below and/or attached an Office communication concerning this application or proceeding.

The time period for reply, if any, is set in the attached communication.

UNITED STATES PATENT AND TRADEMARK OFFICE

Commissioner for Patents
United States Patent and Trademark Office
P.O. Box 1450
Alexandria, VA 22313-1450
www.uspto.gov

MAR 2 4 2011

FITCH, EVEN, TABIN & FLANNERY
P. O. BOX 18415
WASHINGTON DC 20036

In re application of	:	**DECISION ON REQUEST TO**
Manfred Farber	:	**PARTICIPATE IN PATENT**
Application No. 12/863,157	:	**PROSECUTION HIGHWAY**
Filed: August 04, 2010	:	**PROGRAM AND PETITION**
For: MECHANISM FOR AN ADJUSTABLE	:	**TO MAKE SPECIAL UNDER**
BODY COMPONENT OF A VEHICLE	:	**37 CFR 1.102(a)**

This is a decision on the request to participate in the Patent Prosecution Highway (PPH) program and the petition under 37 CFR 1.102(a), filed February 18, 2011, to make the above-identified application special.

The request and petition are **GRANTED**.

A grantable request to participate in the PPH program and petition to make special require:

(1) The U.S. application must disclose an eligible relationship to one or more PCT applications filed in the EPO or USPTO;
(2) Applicant must submit a copy of the allowable/patentable claim(s) from the PCT application(s) latest international work product (the written opinion or the IPER) along with an English translation thereof and a statement that the English translation is accurate;
(3) All the claims in the U.S. application must sufficiently correspond or be amended to sufficiently correspond to the allowable/patentable claim(s) in the PCT application(s);
(4) Examination of the U.S. application has not begun;
(5) Applicant must submit a copy of the latest international work product from the PCT application containing the allowable/patentable claim(s) along with an English translation thereof and a statement that the English translation is accurate;
(6) Applicant must submit an IDS listing the documents cited by the PCT examiner in the international work product along with copies of documents except U.S. patents or U.S. patent application publications.

In light of the petition being properly submitted via EFS-Web as is required the request to participate in the PPH program complies with the above requirements. Therefore, the above-identified application has been accorded "special" status.

All other inquiries concerning the examination or status of the application should be directed to the Patent Application Information Retrieval (PAIR) system.

The application is being forwarded to the examiner for action on the merits commensurate with this decision.

Any inquiry regarding this decision should be directed to Mikado Buiz, Quality Assurance Specialist, at (571) 272-6578.

/ Mikado Buiz /

Mikado Buiz,
Quality Assurance Specialist
Technology Center 3600

MB/MB: 03/23/11

26 AUG 2010

UNITED STATES PATENT AND TRADEMARK OFFICE

Commissioner for Patents
United States Patent and Trademark Office
P.O. Box 1450
Alexandria, VA 22313-1450
www.uspto.gov

BACHMAN & LAPOINTE, P.C.
900 CHAPEL STREET
SUITE 1201
NEW HAVEN CT 06510

In re Application of	:	
BURLATSKY et al.	:	
Application No.: 12/863,159	:	DECISION ON
PCT No.: PCT/US2008/050075	:	
Int. Filing Date: 03 January 2008	:	PETITION UNDER
Priority Date: None	:	
Attorney Docket No.: 079-02911-US-AB(02-578-3)	:	37 CFR 1.137(b)
For: PROTECTIVE AND PRECIPITATION	:	
LAYERS FOR PEM FUEL CELL	:	

This decision is in response to applicants' submission filed 15 July 2010.

BACKGROUND

On 03 January 2008, applicants filed international application PCT/US2008/050075 which designated the U.S. and did not claim a priority date. A copy of the international application was communicated to the United States Patent and Trademark Office (USPTO) from the International Bureau on 09 July 2009. The thirty-month period for paying the basic national fee in the United States expired at midnight on 06 July 2010 (03 July 2010 being a Saturday and 05 July 2010 being a Federal holiday).

On 15 July 2010, applicant filed a transmittal letter for entry into the national stage in the United States, which was accompanied by, *inter alia*, the U.S. basic national fee, a declaration of the inventors, and a petition under 37 CFR 1.137(b).

DISCUSSION

A petition to revive the present application under 37 CFR 1.137(b) must include:

(1) The required reply;
(2) The petition fee;
(3) A statement that the entire delay in filing the required reply from the due date for the reply until the filing of a grantable petition was unintentional.

As to item (1), applicant submitted the basic national fee on 15 July 2010.

As to item (2), applicant submitted the petition fee on 15 July 2010.

As to item (3), the required statement has been provided.

A review of the application file reveals that, with the filing of the present petition and accompanying papers, a proper response has been submitted and all of the requirements of 37 CFR 1.137(b) for revival have been satisfied and revival is therefore appropriate.

The declaration of the inventors filed 15 July 2010 is in compliance with 37 CFR 1.497(a)-(b).

CONCLUSION

The petition under 37 CFR 1.137(b) is **GRANTED** for the reasons set forth above.

This application is being forwarded to the National Stage Processing Branch of the Office of PCT Operations to continue national stage processing of the application.

/Daniel Stemmer/

Daniel Stemmer
Legal Examiner
PCT Legal Affairs
Office of Patent Cooperation Treaty
Legal Administration
Telephone: (571) 272-3301

UNITED STATES PATENT AND TRADEMARK OFFICE

COMMISSIONER FOR PATENTS
UNITED STATES PATENT AND TRADEMARK OFFICE
P.O. BOX 1450
ALEXANDRIA, VA 22313-1450
www.uspto.gov

SANTANGELO LAW OFFICES, P.C.
125 SOUTH HOWES, THIRD FLOOR
FORT COLLINS, CO 80521

MAILED
MAR 17 2011
PCT LEGAL ADMINISTRATION

In re Application of BELITZ et al	:	
U.S. Application No.: 12/863,168	:	
PCT Application No.: PCT/US2009/031162	:	DECISION
Int. Filing Date: 15 January 2009	:	
Priority Date Claimed: 15 January 2008	:	
Attorney Docket No.: Swift-NAMM08-USNP	:	
For: MUSICAL SUPPORT APPARATUS	:	

This is in response to applicant's petition filed 18 January 2011, which is being treated under 37 CFR 1.497(d).

BACKGROUND

On 15 January 2009, applicant filed international application PCT/US2009/031162, which claimed priority of an earlier United States application filed 15 January 2008. The thirty-month period for paying the basic national fee in the United States expired on 15 July 2010.

On 15 July 2010, applicant filed national stage papers in the United States Designated/Elected Office (DO/EO/US). The submission was accompanied by, *inter alia*, the basic national fee required by 35 U.S.C. 371(c)(1).

On 18 November 2010, the DO/EO/US mailed a Notification of Missing Requirements Under 35 U.S.C. 371 (Form PCT/DO/EO/905), which indicated that an oath or declaration in compliance with 37 CFR 1.497 must be filed.

On 18 January 2011, applicant filed the present petition under 37 CFR 1.497(d).

DISCUSSION

The petition states that Donald Eason and Megan Sloan should be removed as inventors.

37 CFR 1.497(d) states,

> If the oath or declaration filed pursuant to 35 U.S.C. 371(c)(4) and this section names an inventive entity different from the inventive entity set forth in the international application, or if a change to the inventive entity has been effected under PCT Rule 92bis subsequent to the execution of any oath or declaration which was filed in the application under PCT Rule 4.17(iv) or this section and the inventive entity thus changed is different from the inventive entity identified in any such oath or declaration, applicant must submit:
>
> (1) A statement from each person being added as an inventor and from each person being deleted as an inventor that any error in inventorship in the international application occurred without deceptive intention on his or her part;
>
> (2) The processing fee set forth in § 1.17(i); and
>
> (3) If an assignment has been executed by any of the original named inventors, the written consent of the assignee (see § 3.73(b) of this chapter); and
>
> (4) Any new oath or declaration required by paragraph (f) of this section.

With regard to item (1) above, the requisite statements have been provided.

With regard to item (2) above, the requisite processing fee has been provided.

With regard to item (3) above, written consent of the assignee has been provided. The assignee has established the right to take action in compliance with 37 CFR 3.73(b).

With regard to item (4) above, a new declaration under 37 CFR 1.497(f) is not required.

CONCLUSION

For the reasons above, the petition under 37 CFR 1.497(d) is GRANTED.

The application has an International Filing Date under 35 U.S.C. 363 of 15 January 2009, and a date under 35 U.S.C. 371(c)(1), (c)(2), and (c)(4) of 18 January 2011.

This application is being forwarded to the United States Designated/Elected Office (DO/EO/US) for further processing in accordance with this decision.

Bryan Lin

Bryan Lin
PCT Legal Examiner
PCT Legal Office

Telephone: 571-272-3303
Facsimile: 571-273-0459

UNITED STATES PATENT AND TRADEMARK OFFICE

Commissioner for Patents
United States Patent and Trademark Office
P.O. Box 1450
Alexandria, VA 22313-1450
www.uspto.gov

BLAKELY SOKOLOFF TAYLOR & ZAFMAN LLP
1279 OAKMEAD PARKWAY
SUNNYVALE CA 94085-4040

MAILED
MAR 30 2011
PCT LEGAL ADMINISTRATION

In re Application of: PETROV, Sergei :
U.S. Application No.: 12/863,176 :
PCT Application No.: PCT/GB2009/050032 :
International Filing Date: 16 January 2009 :
Priority Date: 18 January 2008 :
Attorney's Docket No.: 5926P103 :
For: FLOW CONTROL DEVICE USING A :
DIAPHRAGM :

DECISION
(37 CFR 1.182)

This decision is issued in response to the "PETITION PURSUANT TO 37 C.F.R. 1.182" filed 14 January 2011. Applicant has paid the required petition fee.

BACKGROUND

On 13 January 2011, this Office mailed a communication indicating that a petition under 37 CFR 1.182 was required to clarify the record as to the correct international application number for the present national stage application. The communication noted that the original application submission on 15 July 2010 referenced two different international applications. Specifically, while the Form PTO-1390 Transmittal Letter filed by applicants identified the application as the U.S. national stage of international application number PCT/GB2009/**050032**, the information provided by applicants during the electronic filing process identified the application as the U.S. national stage of international application PCT/GB2009/**050532**.

On 18 January 2011, applicant filed a response to the Notification Of Missing Requirements mailed 30 November 2010. The response included an executed declaration directed to PCT/GB2009/**050032** and payment of the surcharge for filing the declaration later than thirty months after the priority date.

On 14 January 2011, applicant filed the petition under 37 CFR 1.182 considered herein.

DISCUSSION

The petition confirms that the correct international application number for the present national stage application is PCT/GB2009/**050032** and that the entry of the incorrect international application number during the electronic filing process was the result of an inadvertent error. The petition also notes that the correct international application number was listed in several places within the materials filed 15 July 2010, including the Form PTO-1390

Transmittal Letter, the preliminary amendment, and the copy of the international application filed by applicant. The petition also includes payment of the required petition fee.

The present submission satisfies the requirements for a grantable petition to correct the inconsistency in the international application numbers listed in the materials filed herein on 15 July 2010. Accordingly, the national stage application materials filed herein on 15 July 2010, including the payment of the basic national fee, will be treated as the U.S national stage of PCT/GB2009/**050032**. Such materials, including payment of the U.S. basic national fee, were filed prior to the expiration of thirty months from the priority date of PCT/GB2009/**050032**, thereby avoiding abandonment of the international application with respect to the United States.

It is noted that the declaration filed by applicant on 18 January 2011 is not acceptable as filed because it contains a non-dated, non-initialed hand-written alteration, specifically with respect to the citizenship of the sole inventor Sergei PETROV. As set forth in MPEP section 605.04(a): "Any changes made in ink in the application or oath prior to signing should be initialed and dated by the applicants prior to execution of the oath or declaration. The Office will require a new oath or declaration if the alterations are not initialed and dated" (see 37 CFR 1.52(c)).

CONCLUSION

The petition under 37 CFR 1.182 filed 24 January 2011 is **GRANTED**.

The present application will be treated as the U.S. national stage under 35 U.S.C. 371 of PCT/GB2009/**050032**.

The application is being referred to the National Stage Processing Branch of the Office of PCT Operations for further processing in accordance with this decision, including the mailing of a new "Notification Of Missing Requirements" (Form PCT/DO/EO/905) requiring submission of an oath or declaration in compliance with 37 CFR 1.497.[1]

/RichardMRoss/

Richard M. Ross
Attorney Advisor
Office of PCT Legal Administration
Telephone: (571) 272-3296

[1] It is noted that the communication mailed herein on 13 January 2011 vacated the original "Notification Of Missing Requirements" mailed on 30 November 2010.

UNITED STATES PATENT AND TRADEMARK OFFICE

UNITED STATES DEPARTMENT OF COMMERCE
United States Patent and Trademark Office
Address: COMMISSIONER FOR PATENTS
P.O. Box 1450
Alexandria, Virginia 22313-1450
www.uspto.gov

APPLICATION NO.	FILING DATE	FIRST NAMED INVENTOR	ATTORNEY DOCKET NO.	CONFIRMATION NO.
12/863,177	12/13/2010	Niklaus Johann Bucher	014271USP/CSI/PWS/CROCKER	4142

26290 7590 07/08/2011
PATTERSON & SHERIDAN, L.L.P.
3040 POST OAK BOULEVARD
SUITE 1500
HOUSTON, TX 77056

EXAMINER
HAIL, JOSEPH J

ART UNIT	PAPER NUMBER
3723	

MAIL DATE	DELIVERY MODE
07/08/2011	PAPER

Please find below and/or attached an Office communication concerning this application or proceeding.

The time period for reply, if any, is set in the attached communication.

UNITED STATES PATENT AND TRADEMARK OFFICE

Commissioner for Patents
United States Patent and Trademark Office
P.O. Box 1450
Alexandria, VA 22313-1450
www.uspto.gov

PATTERSON & SHERIDAN, L.L.P.
3040 POST OAK BOULEVARD
SUITE 1500
HOUSTON TX 77056

In re Application of: BUCHER, NIKLAUS JOHANN Serial No.: 12/863177 Filed: July 15, 2010 Attorney Docket No. : 014271USP/CSI/PWS/CROCKER Title: MOUNTING PLATE FOR A WIRE SAWING DEVICE, WIRE SAWING DEVICE COMPRISING THE SAME, AND WIRE SAWING PROCESS CARRIED OUT BY THE DEVICE	DECISION ON A REQUEST TO PARTICIPATE IN PCT/PATENT PROSECUTION HIGHWAY PROGRAM AND PETITION TO MAKE SPECIAL UNDER CFR 1.102(a)

This is a decision on the request to participate in the Patent Prosecution Highway (PPH) program and the petition under 37 CFR 1.102(a), filed June 17, 2011 to make the above-identified application special.

The request and petition are **granted**.

A grantable request to participate in the PPH pilot program and petition to make special require:

(1) The U.S. application must validly claim priority under 35 U.S.C. 119(a) to one or more PCT applications filed in the JPO, EPO, KIPO, or USPTO;
(2) Applicant must submit a copy of the allowable/patentable claim(s) from the PCT application(s) latest international work product (the written opinion or the IPER) along with an English translation thereof and a statement that the English translation is accurate;
(3) All the claims in the U.S. application must sufficiently correspond or be amended to sufficiently correspond to the allowable/patentable claim(s) in the PCT application(s);
(4) Examination of the U.S. application has not begun;
(5) Applicant must submit a copy of the latest international work product from the PCT application containing the allowable/patentable claim(s) along with an English translation thereof and a statement that the English translation is accurate; and
(6) Applicant must submit an IDS listing the documents cited by the PCT examiner in the international work product along with copies of documents except U.S. patents or U.S. patent application publications.

In light of the petition being properly submitted, the request to participate in the PPH program and the petition comply with the above requirements. Accordingly, the above-identified application has been accorded "special" status.

The applicant is encouraged to cite and submit all relevant prior art references, if any, to facilitate examination in this application.

Response must be filed via EFS-Web. Telephone inquiries concerning this decision should be directed to Henry C. Yuen, at 571-272-4856.

Petition is **granted**.

/Henry C. Yuen/

Henry C. Yuen
Special Programs Examiner
Technology Center 3700
Tel: 571-272-4856

UNITED STATES PATENT AND TRADEMARK OFFICE

Commissioner for Patents
United States Patent and Trademark Office
P.O. Box 1450
Alexandria, VA 22313-1450
www.uspto.gov

MAILED

SEP 01 2011

PCT LEGAL ADMINISTRATION

Simon Moore
18 Bronte Place
Cambridge 3450 NZ

In re Application of :
Moore, Simon Garry :
Application No.: 12/863,182 :
PCT No.: PCT/NZ2009/000002 :
Int. Filing Date: 20 January 2009 :
Priority Date: 17 January 2008 :
Attorney Docket No.: P42 - CFT - USA aft PCT :
For: CONNECTION DEVICE

DECISION ON PETITION
UNDER 37 CFR 1.137(b)

This decision is issued in response to applicant's "Petition For Revival Of An International Application For Patent Designating The U.S. Abandoned Unintentionally Under 37 CFR 1.137(b)" filed 08 July 2011.[1]

The petition to revive under 37 CFR 1.137(b) is hereby GRANTED as follows:

Applicants' statement that "the entire delay in filing the required reply from the due date for the reply until the filing of a grantable petition under 37 CFR 1.137(b) was unintentional" meets the requirements of 37 CFR 1.137(b)(3).

A review of the application file reveals that applicants have submitted the required reply (declaration, additional claims fee, and surcharge under 37 CFR 1.492(h)) and the requirements of 37 CFR 1.137(b) have been satisfied. Therefore, the request to revive the application abandoned under 35 U.S.C. 371(d) is granted as to the National stage in the United States of America.

This application is being forwarded to the United States Designated/Elected Office (US/DO/EO) for continued processing in accordance with this decision.

Anthony Smith
Attorney-Advisor
Office of PCT Legal Administration
Telephone: (571) 272-3298
Facsimile: (571) 273-0459

[1]Additionally, this decision is issued in response to applicant's communication (dated 25 July 2011) which included the requisite petition fee under 37 CFR 1.17(m); surcharge under 37 CFR 1.492(h); and a claims fee payment of $1037.

27 SEP 2010

UNITED STATES PATENT AND TRADEMARK OFFICE

Commissioner for Patents
United States Patent and Trademark Office
P.O. Box 1450
Alexandria, VA 22313-1450
www.uspto.gov

Alexander Vasilievich Ivashtchenko
2874 Cale Rancho Vista
Encinitas CA 92024

In re Application of: IVASHTCHENKO et al. Application No.: 12/863,192 PCT No.: PCT/IB2009/050275 Int. Filing Date: 23 January 2009 Priority Date: 24 January 2008 Attorney Docket No.:n/a For: SUBSTITUTED CYCLOALCANO [e AND d] . . .	DECISION ON PETITION UNDER 37 CFR 1.137(b)

This decision is issued in response to applicant's petition under 37 CFR 1.137(b), filed 09 September 2010, to revive the above-entitled application.

The petition is <u>DISMISSED</u> without prejudice.

The above-identified application was abandoned on 25 July 2010 for failure to pay the basic national fee 30 months from the priority date for international application no. PCT/IB2009/050275. A Notification of Abandonment (Form PCT/DO/EO/909) was mailed on 08 September 2010.

37 CFR 1.137(b) permits the filing of a petition to revive an abandoned application where the abandonment resulted from an unintentional delay. A grantable petition under this section must include: (1) the required reply, unless previously filed; (2) the petition fee required by law; (3) a statement that the "entire delay in filing the required reply from the due date for the reply until the filing of a grantable petition pursuant to this paragraph was unintentional;" and (4) any terminal disclaimer and fee required pursuant to 37 CFR 1.137(c).

The present petition fails to satisfy item (3) above, that is, it fails to include the required statement of unintentional delay. While the petition form submitted by applicants includes the statement "[t]he entire delay in filing the required reply from the due date for the required reply until the filing of a grantable petition under 37 CFR 1.137(b) was unintentional," this statement is executed by only one of the applicants. This statement must be signed by either all the applicants or by a registered patent attorney or patent agent acting on behalf of all the applicants (see 37 CFR 1.33(b)). Until a properly executed statement of unintentional delay is submitted, item (3) of a grantable petition cannot be considered satisfied.

Any request for reconsideration of this decision must be submitted within **TWO (2) MONTHS** from the mail date of this decision. Extensions of time under 37 CFR 1.136(a) are permitted. The reconsideration request should include a cover letter entitled "Renewed Petition Under 37 CFR 1.137(b)."

Any further correspondence with respect to this matter may be filed electronically via EFS-Web selecting the document description "Petition for review and processing by the PCT Legal Office" or by mail addressed to Mail Stop PCT, Commissioner for Patents, Office of PCT Legal Administration, P.O. Box 1450, Alexandria, Virginia 22313-1450, with the contents of the letter marked to the attention of the Office of PCT Legal Administration.

Anthony Smith
Attorney-Advisor
Office of PCT Legal Administration
Tel: (571) 272-3298

UNITED STATES PATENT AND TRADEMARK OFFICE

Commissioner for Patents
United States Patent and Trademark Office
P.O. Box 1450
Alexandria, VA 22313-1450
www.uspto.gov

MAILED

NOV 15 2010

PCT LEGAL ADMINISTRATION

Alexander Vasilievich Ivashtchenko
2874 Cale Rancho Vista
Encinitas CA 92024

In re Application of:	
IVASHTCHENKO et al.	
Application No.: 12/863,192	
PCT No.: PCT/IB2009/050275	DECISION ON PETITION
Int. Filing Date: 23 January 2009	UNDER 37 CFR 1.137(b)
Priority Date: 24 January 2008	
Attorney Docket No.: n/a	
For: SUBSTITUTED CYCLOALCANO [e AND d] . . .	

The petition to revive under 37 CFR 1.137(b) filed 29 September 2010 in the above-captioned application is hereby GRANTED as follows:

Applicants' statement that "the entire delay in filing the required reply from the due date for the reply until the filing of a grantable petition under 37 CFR 1.137(b) was unintentional" meets the requirements of 37 CFR 1.137(b)(3).

A review of the application file reveals that applicants have submitted the basic national fee and the requirements of 37 CFR 1.137(b) have been satisfied. Therefore, the request to revive the application abandoned under 35 U.S.C. 371(d) is granted as to the National stage in the United States of America.

This application is being returned to the United States Designated/Elected Office for processing in accordance with this decision.

Anthony Smith
Attorney-Advisor
Office of PCT Legal Administration
Tel: (571) 272-3298

UNITED STATES PATENT AND TRADEMARK OFFICE

Commissioner for Patents
United States Patent and Trademark Office
P.O. Box 1450
Alexandria, VA 22313-1450
www.uspto.gov

MAILED

JUL 12 2011

PCT LEGAL ADMINISTRATION

PHILIPS INTELLECTUAL PROPERTY & STANDARDS
P.O. BOX 3001
BRIARCLIFF MANOR NY 10510

In re Application of: SCHENK, et al. :
U.S. Application No.: 12/863,204 :
PCT Application No.: PCT/IB2009/050176 :
International Filing Date: 19 January 2009 :
Priority Date: 24 January 2008 :
Attorney's Docket No.: 009370 US1 :
For: SENSOR DEVICE WITH TILTING OR ORIENTATION-CORRECTING PHOTO SENSOR FOR ATMOSPHERE CREATION :

DECISION ON PETITION UNDER 37 CFR 1.182

This decision is issued in response to the "Petition Under 37 CFR 1182" filed on 31 May 2011. Applicants have paid the required petition fee.

BACKGROUND

On 28 March 2011, this Office mailed a notification indicating that a petition under 37 CFR 1.182 was required to clarify the record as to the correct international application number for the present national stage application. The notification indicated that the original application submission on 16 July 2010 referenced two different international applications. Specifically, while the ADS (and other documents) filed by applicants on 16 July 2010 identified the application as the U.S. national stage under 35 U.S.C. 371 of international application number PCT/IB2009/050176, the information provided by applicant during the electronic filing process identified the application as the U.S. national stage under 35 U.S.C. 371 of international application PCT/IB2008/050176.

On 31 May 2011, applicants filed the petition under 37 CFR 1.182 considered herein.

DISCUSSION

The petition filed on 31 May 2011 confirms that the correct international application number for the present national stage application is PCT/IB2009/050176 and that the error in the international application number input during the electronic filing process was made without deceptive intent. The petition identifies the multiple locations in the documents filed on 16 July 2010 where the correct international application number, PCT/IB2009/050176, was listed (e.g., the ADS and the declaration). In addition, the petition was accompanied by the required petition fee.

Applicants' petition satisfies the requirements for a grantable petition under 37 CFR 1.182 to correct the inconsistency in the international application numbers set forth in the materials filed herein on 16 July 2010. Accordingly, the application materials filed on 16 July 2010 will be treated as directed to international application PCT/IB2009/050176. Such materials, including payment of the U.S. basic national fee, were filed prior to the expiration of thirty months from the priority date of PCT/IB2009/050176, thereby avoiding abandonment of the international application with respect to the United States.

CONCLUSION

The petition under 37 CFR 1.182 filed 31 May 2011 is **GRANTED**.

The present application will be treated as the U.S. national stage under 35 U.S.C. 371 of PCT/IB2009/050176.

The application is being referred to the National Stage Processing Branch of the Office of PCT Operations for further processing in accordance with this decision.

/RichardMRoss/

Richard M. Ross
Attorney Advisor
Office of PCT Legal Administration
Telephone: (571) 272-3296

UNITED STATES PATENT AND TRADEMARK OFFICE

COMMISSIONER FOR PATENTS
UNITED STATES PATENT AND TRADEMARK OFFICE
P.O. BOX 1450
ALEXANDRIA, VA 22313-1450
www.uspto.gov

CROCKETT & CROCKETT, P.C.
26020 ACERO
SUITE 200
MISSION VIEJO, CA 92691

MAILED
JUL 13 2011
PCT LEGAL ADMINISTRATION

In re Application of ZHENG et al :
U.S. Application No.: 12/863,268 :
PCT Application No.: PCT/SG2009/000025 :
Int. Filing Date: 14 January 2009 :
Priority Date Claimed: 18 January 2008 : DECISION
Attorney Docket No.: 213/268US :
For: COMMUNICATION DEVICE AND :
METHOD OF DETERMINING A RANGING :
VALUE IN THE COMMUNICATION DEVICE :

This is in response to applicant's petition under 37 CFR 1.47(a) filed on 16 May 2011.

BACKGROUND

On 14 January 2009, applicant filed international application PCT/SG2009/000025, which claimed priority of an earlier United States application filed 18 January 2008. A copy of the international application was communicated to the USPTO from the International Bureau on 23 July 2009. The thirty-month period for paying the basic national fee in the United States expired on 19 July 2010.

On 16 July 2011, applicant filed national stage papers in the United States Designated/Elected Office (DO/EO/US). The submission was accompanied by, *inter alia*, the basic national fee required by 35 U.S.C. 371(c)(1).

On 17 November 2010, the DO/EO/US mailed a Notification of Missing Requirements Under 35 U.S.C. 371 (Form PCT/DO/EO/905), which indicated that an oath or declaration in compliance with 37 CFR 1.497 must be filed.

On 16 May 2011, applicant filed the present petition under 37 CFR 1.47(a).

DISCUSSION

A petition under 37 CFR 1.47(a) must be accompanied by: (1) an oath or declaration by each applicant on his or her own behalf and on behalf of the nonsigning joint inventors, (2)

factual proof that the missing joint inventors refuse to join in the application or cannot be reached after diligent effort, (3) the fee set forth in §1.17(i), and (4) the last known addresses of the nonsigning joint inventors.

With regard to item (1) above, the declarations filed with the petition are improper. Specifically, the name of the second inventor does not match that shown in the international application.

With regard to item (2) above, MPEP 409.03(d) states in relevant part,

> A refusal by an inventor to sign an oath or declaration when the inventor has not been presented with the application papers does not itself suggest that the inventor is refusing to join the application unless it is clear that the inventor understands exactly what he or she is being asked to sign and refuses to accept the application papers. A copy of the application papers should be sent to the last known address of the nonsigning inventor, or, if the nonsigning inventor is represented by counsel, to the address of the nonsigning inventor's attorney. . . . It is reasonable to require that the inventor be presented with the application papers before a petition under 37 CFR 1.47 is granted since such a procedure ensures that the inventor is apprised of the application to which the oath or declaration is directed. In re Gray, 115 USPQ 80 (Comm'r Pat. 1956).
>
> Where a refusal of the inventor to sign the application papers is alleged, the circumstances of the presentation of the application papers and of the refusal must be specified in a statement of facts by the person who presented the inventor with the application papers and/or to whom the refusal was made. Statements by a party not present when an oral refusal is made will not be accepted.
>
> Proof that a bona fide attempt was made to present a copy of the application papers (specification, including claims, drawings, and oath or declaration) to the nonsigning inventor for signature, but the inventor refused to accept delivery of the papers or expressly stated that the application papers should not be sent, may be sufficient. When there is an express oral refusal, that fact along with the time and place of the refusal must be stated in the statement of facts. When there is an express written refusal, a copy of the document evidencing that refusal must be made part of the statement of facts. The document may be redacted to remove material not related to the inventor's reasons for refusal.
>
> When it is concluded by the 37 CFR 1.47 applicant that a nonsigning inventor's conduct constitutes a refusal, all facts upon which that conclusion is based should be stated in the statement of facts in support of the petition or directly in the petition. If there is documentary evidence to support facts alleged in the petition or in any statement of facts, such evidence should be submitted. Whenever a nonsigning inventor gives a reason for refusing to sign the application oath or declaration, that reason should be stated in the petition.

The petition states that joint inventor Yen Ju The refuses to sign the application papers. The petition adequately demonstrates that a bona fide attempt was made to present a copy of the application papers to inventor The for signature that that inventor The received such papers (see affidavit of Kian Chiew Seow, ¶2). Furthermore, the petition sufficiently illustrates that inventor The refuses to sign. In particular, inventor The made an express oral refusal to sign during a

conversation with Kian Chiew Seow (see affidavit of Kian Chiew Seow, ¶2). Thus, it can be concluded with reasonable certainty that inventor The refuses to join in the application.

With regard to item (3) above, applicant has provided the requisite petition fee.

With regard to item (4) above, the petition states the last known address of the nonsigning inventor.

CONCLUSION

For the reasons above, the petition under 37 CFR 1.47(a) is DISMISSED without prejudice.

If reconsideration on the merits of the petition is desired, a proper response must be filed within TWO (2) MONTHS from the mail date of this decision. Failure to timely file a proper response will result in ABANDONMENT of the application. Extensions of time are available under 37 CFR 1.136(a). Any reconsideration request should include a cover letter entitled "Renewed Petition Under 37 CFR 1.47(a)". No additional petition fee is required.

Any further correspondence with respect to this matter may be filed electronically via EFS-Web selecting the document description "Petition for review and processing by the PCT Legal Office" or by mail addressed to Mail Stop PCT, Commissioner for Patents, Office of PCT Legal Administration, P.O. Box 1450, Alexandria, Virginia 22313-1450, with the contents of the letter marked to the attention of the Office of PCT Legal Administration.

Bryan Lin
PCT Legal Examiner
PCT Legal Office

Telephone: 571-272-3303
Facsimile: 571-273-0459

UNITED STATES PATENT AND TRADEMARK OFFICE

Commissioner for Patents
United States Patent and Trademark Office
P.O. Box 1450
Alexandria, VA 22313-1450
www.uspto.gov

CROCKETT & CROCKETT, P.C.
26020 ACERO
SUITE 200
MISSION VIEJO, CA 92691

MAILED
DEC 21 2011
PCT LEGAL ADMINISTRATION

In re Application of ZHENG et al	:	
U.S. Application No.: 12/863,268	:	
PCT Application No.: PCT/SG2009/000025	:	
Int. Filing Date: 14 January 2009	:	
Priority Date Claimed: 18 January 2008	:	DECISION
Attorney Docket No.: 213/268US	:	
For: COMMUNICATION DEVICE AND	:	
METHOD OF DETERMINING A RANGING	:	
VALUE IN THE COMMUNICATION DEVICE	:	

This is in response to applicant's renewed petition under 37 CFR 1.47(a) and petition under 37 CFR 1.182 filed on 13 September 2011.

BACKGROUND

On 14 January 2009, applicant filed international application PCT/SG2009/000025, which claimed priority of an earlier United States application filed 18 January 2008. A copy of the international application was communicated to the USPTO from the International Bureau on 23 July 2009. The thirty-month period for paying the basic national fee in the United States expired on 19 July 2010.

On 16 July 2011, applicant filed national stage papers in the United States Designated/Elected Office (DO/EO/US). The submission was accompanied by, *inter alia*, the basic national fee required by 35 U.S.C. 371(c)(1).

On 17 November 2010, the DO/EO/US mailed a Notification of Missing Requirements Under 35 U.S.C. 371 (Form PCT/DO/EO/905), which indicated that an oath or declaration in compliance with 37 CFR 1.497 must be filed.

On 16 May 2011, applicant filed a petition under 37 CFR 1.47(a).

On 13 July 2011, this Office mailed a decision dismissing the 16 May 2011 petition.

On 13 September 2011, applicant filed the instant renewed petition under 37 CFR 1.47(a) and petition under 37 CFR 1.182.

DISCUSSION

I. Renewed Petition under 37 CFR 1.47(a)

A petition under 37 CFR 1.47(a) must be accompanied by: (1) an oath or declaration by each applicant on his or her own behalf and on behalf of the nonsigning joint inventors, (2) factual proof that the missing joint inventors refuse to join in the application or cannot be reached after diligent effort, (3) the fee set forth in §1.17(i), and (4) the last known addresses of the nonsigning joint inventors.

Applicant previously satisfied items (2), (3), and (4) above.

With regard to item (1) above, in view of the petition under 37 CFR 1.182, the declaration filed on 16 May 2011 is proper.

II. Petition under 37 CFR 1.182

MPEP 1893.01(e) states in relevant part,

> Where there has been no change of inventorship but the name of an inventor indicated in the international application during the international phase has changed such that the inventor's name is different from the corresponding name indicated in an oath or declaration submitted under 37 CFR 1.497, for example, on account of marriage, then a petition under 37 CFR 1.182 will be required to accept the oath or declaration with the changed name.

The petition includes a proper explanation regarding the discrepancy in the second inventor's name. Applicant's explanation for the error is accepted.

CONCLUSION

For the reasons in §I above, the petition under 37 CFR 1.47(a) is GRANTED.

For the reasons in §II above, the petition under 37 CFR 1.182 is GRANTED.

The application has an International Filing Date under 35 U.S.C. 363 of 14 January 2009, and a date under 35 U.S.C. 371(c)(1), (c)(2), and (c)(4) of 16 May 2011.

As set forth in 37 CFR 1.47(a), a notice of the filing of this application will be forwarded to the nonsigning inventor at the last known address of record and will be published in the *Official Gazette*.

This application is being forwarded to the United States Designated/Elected Office (DO/EO/US) for further processing in accordance with this decision.

Bryan Lin

Bryan Lin
PCT Legal Examiner
PCT Legal Office

Telephone: 571-272-3303
Facsimile: 571-273-0459

UNITED STATES PATENT AND TRADEMARK OFFICE

Commissioner for Patents
United States Patent and Trademark Office
P.O. Box 1450
Alexandria, VA 22313-1450
www.uspto.gov

Yen Ju The
81A
Lorong 4 Toa Payoh #19-430
Singapore 311081

MAILED
DEC 21 2011
PCT LEGAL ADMINISTRATION

In re Application of ZHENG et al
U.S. Application No.: 12/863,268
PCT Application No.: PCT/SG2009/000025
Int. Filing Date: 14 January 2009
Priority Date Claimed: 18 January 2008
For: COMMUNICATION DEVICE . . .

Dear Yen Ju The:

You are named as a joint inventor in the above-captioned United States national stage application, filed under the provisions of 37 CFR 1.47(a) and 35 U.S.C. 116. Should a patent be granted, you will be designated as an inventor.

As a named inventor, you are entitled to inspect any paper in the file wrapper of the application, order copies of all or any part thereof (at a prepaid cost set forth in 37 CFR 1.19) or to make your position of record in the application. Alternatively, you may arrange to do any of the preceding through a registered patent agent or attorney presenting written authorization from you. If you choose to join in the application, counsel of record (see below) would presumably assist you. Joining in the application would entail the filing of an appropriate oath or declaration by you pursuant to 37 CFR 1.63.

BryanLin

Bryan Lin
PCT Legal Examiner
PCT Legal Office
Telephone: 571-272-3303
Facsimile: 571-273-0459

CROCKETT & CROCKETT, P.C.
26020 ACERO
SUITE 200
MISSION VIEJO, CA 92691
Attorney Docket No.: 213/268US

PTO/SB/20PCT-EP (05-10)
Approved for use through 01/31/2012. OMB 0651-0058
U.S. Patent and Trademark Office; U.S. DEPARTMENT OF COMMERCE
Under the Paperwork Reduction Act of 1995, no persons are required to respond to a collection of information unless it contains a valid OMB control number.

REQUEST FOR PARTICIPATION IN THE PATENT COOPERATION TREATY – PATENT PROSECUTION HIGHWAY (PCT-PPH) PILOT PROGRAM BETWEEN THE EUROPEAN PATENT OFFICE (EPO) AND THE USPTO

Application No.:	12/863,307-Conf. #5246	Filing Date:	July 16, 2010
First Named Inventor:	Johann MAYER		
Attorney Docket No.:	8952-000111/US/NP; 40340 US		
Title of the Invention:	SAFETY DEVICE FOR A VEHICLE AND METHOD FOR CONTROLLING A SAFETY DEVICE		

THIS REQUEST FOR PARTICIPATION IN THE PCT-PPH PILOT PROGRAM ALONG WITH THE REQUIRED DOCUMENTS MUST BE SUBMITTED VIA EFS-WEB. INFORMATION REGARDING EFS-WEB IS AVAILABLE AT HTTP://WWW.USPTO.GOV/EBC/EFS_HELP.HTML.

APPLICANT HEREBY REQUESTS PARTICIPATION IN THE PATENT PCT-PPH PROGRAM AND PETITIONS TO MAKE THE ABOVE-IDENTIFIED APPLICATION SPECIAL UNDER THE PCT-PPH PROGRAM.

The above-identified application is (1) a national stage entry of the corresponding PCT application, or (2) a national stage entry of another PCT application which claims priority to the corresponding PCT application, or (3) a national application that claims domestic/ foreign priority to the corresponding PCT application, or (4) a national application which forms the basis for the priority claim in the corresponding PCT application.

The corresponding PCT application number(s) is/are: PCT/EP2009/000131

The international date of the corresponding PCT application(s) is/are: January 13, 2009

I. List of Required Documents:

a. **A copy of the latest international work product (WO/ISA, WO/IPEA, or IPER) in the above-identified corresponding PCT application(s)**

[X] Is attached.

[ ] Is not attached because the document is already in the U.S. application.

b. **A copy of all claims which were indicated as having novelty, inventive step and industrial applicability in the above-identified corresponding PCT application(s).**

[ ] Is attached.

[X] Is not attached because the document is already in the U.S. application.

c. **English translations of the documents in a. and b. are attached (if the documents are not in the English language). A statement that the English translation is accurate is attached for the document in b. above.**

d. **(1) An information disclosure statement listing the documents cited in the international work products (ISR, WO/ISA, WO/IPEA, IPER) of the corresponding PCT application.**

[ ] Is attached.

[X] Has already been filed in the above-identified U.S. application on July 16, 2010

(2) Copies of all documents (except) for U.S. patents or U.S. patent application publications)

[ ] Are attached.

[X] Have already been filed in the above-identified U.S. application on July 16, 2010

Under the Paperwork Reduction Act of 1995, no persons are required to respond to a collection of information unless it contains a valid OMB control number.

REQUEST FOR PARTICIPATION IN THE PCT-PPH PILOT PROGRAM BETWEEN THE EPO AND THE USPTO
(continued)

Application No.:	12/863,307-Conf. #5246
First Named Inventor:	Johann MAYER

II. Claims Correspondence Table:

Claims in US Application	Patentable Claims in the corresponding PCT Application	Explanation regarding the correspondence
13	1	All of the claims in the U.S. application are essentially identical to the original Patentable Claims in the corresponding PCT application. Minor amendments have been made, primarily to eliminate multiple dependencies in the claims.
14	2	
15	3	
16	4	
17	5	
18	6	
19	7	
20	8	
21	9	
22	10	
23	11	
24	12	

III. All the claims in the US application sufficiently correspond to the patentable claims in the corresponding PCT application.

Signature	Date November 2, 2010
Name (Print/Typed) Stephen T. Olson	Registration Number 36,626

15750093.1

I hereby certify that this paper (along with any paper referred to as being attached or enclosed) is being transmitted via the Office electronic filing system in accordance with § 1.6(a)(4).

Dated: November 2, 2010 Signature: _____ (Stephen T. Olson)

UNITED STATES PATENT AND TRADEMARK OFFICE

UNITED STATES DEPARTMENT OF COMMERCE
United States Patent and Trademark Office
Address: COMMISSIONER FOR PATENTS
P.O. Box 1450
Alexandria, Virginia 22313-1450
www.uspto.gov

APPLICATION NO.	FILING DATE	FIRST NAMED INVENTOR	ATTORNEY DOCKET NO.	CONFIRMATION NO.
12/863,307	11/02/2010	Johann Mayer	8952-000111/US/NP;40340US	5246

27572 7590 02/03/2011
HARNESS, DICKEY & PIERCE, P.L.C.
P.O. BOX 828
BLOOMFIELD HILLS, MI 48303

EXAMINER
DICKSON, PAUL N

ART UNIT	PAPER NUMBER
3616	

MAIL DATE	DELIVERY MODE
02/03/2011	PAPER

Please find below and/or attached an Office communication concerning this application or proceeding.

The time period for reply, if any, is set in the attached communication.

UNITED STATES PATENT AND TRADEMARK OFFICE

Commissioner for Patents
United States Patent and Trademark Office
P.O. Box 1450
Alexandria, VA 22313-1450
www.uspto.gov

FEB - 3 2011

HARNESS, DICKEY & PIERCE, P.L.C.
P.O. BOX 828
BLOOMFIELD HILLS MI 48303

In re application of Mayer et al. Application No. 12/863,307 Filed: November 2, 2010 For: SAFETY ARRANGEMENT FOR A VEHICLE AND METHOD FOR CONTROLLING A SAFETY ARRANGEMENT	: : : : : :	**DECISION ON REQUEST TO PARTICIPATE IN PATENT PROSECUTION HIGHWAY PROGRAM AND PETITION TO MAKE SPECIAL UNDER 37 CFR 1.102(a)**

This is a decision on the request to participate in the Patent Prosecution Highway (PPH) program and the petition under 37 CFR 1.102(a), filed November 2, 2010, to make the above-identified application special.

The request and petition are **GRANTED**.

A grantable request to participate in the PPH program and petition to make special require:

(1) The U.S. application must disclose an eligible relationship to one or more PCT applications filed in the EPO or USPTO;
(2) Applicant must submit a copy of the allowable/patentable claim(s) from the PCT application(s) latest international work product (the written opinion or the IPER) along with an English translation thereof and a statement that the English translation is accurate;
(3) All the claims in the U.S. application must sufficiently correspond or be amended to sufficiently correspond to the allowable/patentable claim(s) in the PCT application(s);
(4) Examination of the U.S. application has not begun;
(5) Applicant must submit a copy of the latest international work product from the PCT application containing the allowable/patentable claim(s) along with an English translation thereof and a statement that the English translation is accurate;
(6) Applicant must submit an IDS listing the documents cited by the PCT examiner in the international work product along with copies of documents except U.S. patents or U.S. patent application publications.

In light of the petition being properly submitted via EFS-Web as is required, the request to participate in the PPH program complies with the above requirements, the above-identified application has been accorded "special" status.

All other inquiries concerning the examination or status of the application should be directed to the Patent Application Information Retrieval (PAIR) system.

The application is being forwarded to the examiner for action on the merits commensurate with this decision.

Any inquiry regarding this decision should be directed to Mikado Buiz, Quality Assurance Specialist, at (571) 272-6578.

/ Mikado Buiz /

Mikado Buiz,
Quality Assurance Specialist
Technology Center 3600

BM/BM: 02/02/11

UNITED STATES PATENT AND TRADEMARK OFFICE

Commissioner for Patents
United States Patent and Trademark Office
P.O. Box 1450
Alexandria, VA 22313-1450
www.uspto.gov

ROPES & GRAY, LLP
IPRM - Floor 43
PRUDENTIAL TOWER
800 BOYLSTON STREET
BOSTON, MA 02199-3600

MAILED

OCT 18 2011

OFFICE OF PETITIONS

In re Application of
Mahesh Kandula, et. al.
Application No. 12/863,349
Filed: June 24, 2011
Attorney Docket No. IGPI-009-301

DECISION ON PETITION
TO WITHDRAW FROM
RECORD

This is a decision on the Request to Withdraw as attorney or agent of record under 37 CFR §§ 1.36(b) or 10.40 filed September 30, 2011.

The request is **NOT APPROVED**.

A review of the file record indicates that David P. Pleynet and the attorneys/agents associated with Customer Number 28120 do not have power of attorney in this patent application, but may have been employed or otherwise engaged in the proceedings in this patent application.

The Office will no longer approve requests from practitioners to withdraw from application where the requesting practitioners is acting, or has acted, in a representative capacity pursuant to 37 CFR 1.34. In these situations, the practitioner is responsible for the correspondence the practitioner files in the application while acting in a representative capacity. As such, there is no need for the practitioner to obtain the Office's permission to withdraw from representation. However, practitioners acting in a representative capacity, like practitioners who have power of attorney in the application, remain responsible for noncompliance with 37 CFR 1.56, as well as 37 CFR 10.18, with respect to the documents they file.

The Office strongly encourages practitioner(s) requesting withdrawal from representation as practitioner of record in an application to review the record to determine whether he or she is, in fact, of record and how he or she was made of record. The practitioner(s) should determine whether he or she was appointed by naming each practitioner individually or through the use of a Customer Number. If the practitioner(s) were appointed by a specific designation, then the request should ask that each specified practitioner be withdrawn and should list each practitioner(s) in the Request. Similarly, if practitioner(s) was appointed by a Customer Number, the practitioner(s) should ensure that the correct number is provided in the Request. Additionally, as set forth in MPEP 403(I), the addition or deletion of a

practitioner from the list of persons associated with a Customer Number should be done by way of a *Request for Customer umber Data Change* (PTO/SB/124) and not a *Request for Withdrawal As Attorney or Agent and Change of Correspondence Address* (PTO/SB/83).

Additionally, the request cannot be approved because the requested change in the correspondence address is improper.

The Office will no longer change the correspondence address to that of a new practitioner unless the Request is accompanied by a power of attorney to a new practitioner (e.g., Form PTO/SB/82). However, the Office will only accept correspondence address changes to the most current address information provided for the assignee of the entire interest *that properly became of record under 37 CFR 3.71,* or, if no assignee of the entire interest has properly been made of record, the most current address information provided for the first named inventor. 37 CFR 3.71(c) states:

> *An assignee becomes of record either in a national patent application or a reexamination proceeding by filing a statement in compliance with § 3.73(b) that is signed by a party who is authorized to act on behalf of the assignee.*

Therefore, as there is currently no Statement under 37 CFR 3.73(b)[1] with the current assignee information of record in the present application, and since the current address information for the first named inventor was not provided, the Office cannot change the correspondence address to the address listed in the Request to Withdraw.

In view of the above, all future communications from the Office will continue to be directed to the above-listed address unless otherwise notified by the applicant.

Telephone inquiries concerning this decision should be directed to the undersigned at (571) 272-3226.

Andrea Smith
Petitions Examiner
Office of Petitions

cc: IndiGENE Pharmaceuticals Inc.
115 Flanders Road
Metrowest Business Park
Westborough, MA 01581

[1] See USPTO Form No. PTO/SB/96.

UNITED STATES PATENT AND TRADEMARK OFFICE

UNITED STATES DEPARTMENT OF COMMERCE
United States Patent and Trademark Office
Address: COMMISSIONER FOR PATENTS
P.O. Box 1450
Alexandria, Virginia 22313-1450
www.uspto.gov

APPLICATION NO.	FILING DATE	FIRST NAMED INVENTOR	ATTORNEY DOCKET NO.	CONFIRMATION NO.
12/863,370	07/16/2010	Min-Soo Kang	29137.641.00	5639

30827 7590 07/05/2011
MCKENNA LONG & ALDRIDGE LLP
1900 K STREET, NW
WASHINGTON, DC 20006

EXAMINER
GURLEY, LYNNE ANN

ART UNIT	PAPER NUMBER
2811	

MAIL DATE	DELIVERY MODE
07/05/2011	PAPER

Please find below and/or attached an Office communication concerning this application or proceeding.

The time period for reply, if any, is set in the attached communication.

UNITED STATES PATENT AND TRADEMARK OFFICE

Commissioner for Patents
United States Patent and Trademark Office
P.O. Box 1450
Alexandria, VA 22313-1450
www.uspto.gov

MCKENNA LONG & ALDRIDGE LLP
1900 K STREET, NW
WASHINGTON DC 20006

In re Application of	**: DECISION ON REQUEST TO**
KANG et al.	**: PARTICIPATE IN THE PATENT**
Application No.: 12/863,370	**: PROSECUTION HIGHWAY**
Filed: 16 July 2010	**: PROGRAM AND PETITION**
Attorney Docket No.: 29137.641.00	**: TO MAKE SPECIAL UNDER**
For: ORGANIC LUMINESCENT DEVICE AND A PRODUCTION METHOD FOR THE SAME	**: 37 CFR 1.102(a)**

This is a decision on the request to participate in the Patent Prosecution Highway (PPH) program and the petition under 37 CFR 1.102(a), filed 20 June 2011, to make the above-identified application special.

The request and petition are **GRANTED**.

Discussion

A grantable request to participate in the PPH program and petition to make special require:

1. The U.S. application is

    a. a Paris Convention application which either
        i. validly claims priority under 35 U.S.C. 119(a) and 37 CFR 1.55 to one or more applications filed in the KIPO, or
        ii. validly claims priority under 35 U.S.C. 119(a)/365(a) to a PCT application that contains no priority claims,

    or

    b. a national stage application under the PCT (an application which entered the national stage in the U.S. from a PCT international application after compliance with 35 U.S.C. 371), which PCT application
        i. validly claims priority under 35 U.S.C. 365(b) to an application filed in the KIPO, or
        ii. validly claims priority under 35 U.S.C. 365(b) to a PCT application that contains no priority claims, or
        iii. contains no priority claim,

    or

    c. a so-called bypass application filed under 35 U.S.C. 111(a) which validly claims benefit under 35 U.S.C. 120 to a PCT application, which PCT application

i. validly claims priority under 35 U.S.C. 365(b) to an application filed in the KIPO, or
ii. validly claims priority under 35 U.S.C. 365(b) to a PCT application that contains no priority claims, or
iii. contains no priority claim;

2. Applicant must submit a copy of:
   a. The allowable/patentable claim(s) from the KR application(s);
   b. An English translation of the allowable/patentable claim(s), and
   c. A statement that the English translation is accurate (if the claims were published in a language other than English);
3. Applicant must:
   a. Ensure that all the claims in the U.S. application must sufficiently correspond or be amended to sufficiently correspond to the allowable/patentable claim(s) in the KR application(s), and
   b. Submit a claims correspondence table in English;
4. Examination of the U.S. application has not begun;
5. Applicant must submit:
   a. A copy of all the office actions (which are relevant to patentability), excluding "Decision to Grant a Patent" from each of the KR application(s) containing the allowable/patentable claim(s);
   b. An English language translation of the KIPO office action; and
   c. A statement that the English translation is accurate (if the office actions are not in the English language);
6. Applicant must submit:
   a. An IDS listing the documents cited by the KIPO examiner in the KIPO office action (unless already filed in this application); and
   b. Copies of all the documents cited in the KIPO office action, except U.S. patents or U.S. patent application publications (unless already filed in this application);

The request to participate in the PPH program and petition comply with the above requirements. Accordingly, the above-identified application has been accorded "special" status.

Telephone inquiries concerning this decision should be directed to Lee W. Young at 571-272-4549.

All other inquiries concerning the examination or status of the application is accessible in the PAIR system at http://uspto.gov/ebc/index.html.

Lee W. Young
TQAS
Technology Center 2800 – Semiconductors
Electrical & Optical Systems & Components

UNITED STATES PATENT AND TRADEMARK OFFICE

Commissioner for Patents
United States Patent and Trademark Office
P.O. Box 1450
Alexandria, VA 22313-1450
www.uspto.gov

MAILED

DEC 17 2010

PCT LEGAL ADMINISTRATION

Syngenta Crop Protection, Inc.
410 Swing Road
Greensboro NC 27409

In re Application of: GODWIN, Jeremy
Application No.: 12/863,372
PCT No.: PCT/EP2009/000165
Int. Filing Date: 14 January 2009
Priority Date: 16 January 2008
Atty. Docket No.: 71759
For: FUNGICIDAL COMPOSITIONS

DECISION ON PETITION
UNDER 37 CFR 1.137(b)

The petition to revive under 37 CFR 1.137(b) filed 18 October 2010 in the above-captioned application is hereby **GRANTED** as follows:

Applicants' statement that "the entire delay in filing the required reply from the due date for the reply until the filing of a grantable petition under 37 CFR 1.137(b) was unintentional" meets the requirements of 37 CFR 1.137(b)(3).

A review of the application file reveals that applicants have submitted the basic national fee for PCT/EP2009/000165 and the requirements of 37 CFR 1.137(b) have been satisfied. Therefore, the request to revive the application abandoned under 35 U.S.C. 371(d) is granted as to the National stage in the United States of America.

This application is being forwarded to the United States Designated/Elected Office (US/DO/EO) for continued processing including the issuance of a Notification of Missing Requirements (Form PCT/DO/EO/905) indicating that an oath or declaration along with the $130 surcharge for filing the oath or declaration after the thirty-month period is required.

Anthony Smith
Attorney-Advisor
Office of PCT Legal Administration
Tel: (571) 272-3298
Fax: (571) 273-0459

United States Patent and Trademark Office

Commissioner for Patents
United States Patent and Trademark Office
P.O. Box 1450
Alexandria, VA 22313-1450
www.uspto.gov

MAILED

NOV 23 2010

PCT LEGAL ADMINISTRATION

FOLEY AND LARDNER LLP
SUITE 500
3000 K STREET NW
WASHINGTON DC 20007

In re Application of Horlock Application No.: 12/863,426 PCT No.: PCT/AU2008/000062 Int. Filing Date: 17 January 2008 Priority Date: 17 January 2007 Attorney Docket No.: 054270-0185 For: Suspension System With Progressively Constricting Plunger	:	DECISION

This is in response to the petition under 37 CFR 1.181 filed on 24 September 2010.

BACKGROUND

This international application was filed on 17 January 2008, claimed an earlier priority date of 17 January 2007, and designated the U.S. The International Bureau transmitted a copy of the published international application to the USPTO on 24 July 2008. The 30 month time period for paying the basic national fee in the United States, as calculated from said priority date, expired at midnight on 17 July 2009. Applicants filed *inter alia* the basic national fee on 16 July 2010.

On 11 August 2010, a Notification of Abandonment (Form PCT/DO/EO/909) was mailed to applicants, indicating that this international application had become abandoned with respect to the national stage in the United States because "Application was due July 19, 2009."

DISCUSSION

Petitioner requests withdrawal of the holding of abandonment on the basis that "the application was timely filed," since the earlier priority claim allegedly was withdrawn. Petitioner has provided a copy of an "International Application Status Report" which reflects a priority date (INID code (31)) of 17 January 2007. However, review of the documents available at www.wipo.int reveals the presence of an indication that the priority claim may have been withdrawn as of 24 July 2008, but the document evidencing such withdrawal is not currently available from said web page, and petitioner has not provided a copy thereof. Petitioner may wish to introduce additional documentary evidence supporting the position that said priority claim was in fact withdrawn during the international phase.

DECISION

The petition is **DISMISSED**, without prejudice.

If reconsideration on the merits of this petition is desired, a proper response must be filed within **TWO (2) MONTHS** from the mail date of this decision. Extensions of time may be obtained under 37 CFR 1.136(a).

Any further correspondence with respect to this matter may be filed electronically via EFS-Web selecting the document description "Petition for review and processing by the PCT Legal Office" or by mail addressed to Mail Stop PCT, Commissioner for Patents, Office of PCT Legal Administration, P.O. Box 1450, Alexandria, Virginia 22313-1450, with the contents of the letter marked to the attention of the Office of PCT Legal Administration.

/George Dombroske/
George Dombroske
PCT Legal Examiner
Office of PCT Legal Administration
Tel: (571) 272-3283

United States Patent and Trademark Office

Commissioner for Patents
United States Patent and Trademark Office
P.O. Box 1450
Alexandria, VA 22313-1450
www.uspto.gov

FOLEY AND LARDNER LLP
SUITE 500
3000 K STREET NW
WASHINGTON DC 20007

MAILED

MAR 25 2011

PCT LEGAL ADMINISTRATION

In re Application of
Horlock
Application No.: 12/863,426
PCT No.: PCT/AU2008/000062
Int. Filing Date: 17 January 2008
Priority Date: 17 January 2008
Attorney Docket No.: 054270-0185
For: Suspension System With Progressively Constricting Plunger

DECISION

This is in response to the renewed petition under 37 CFR 1.181 filed on 12 January 2011.

DISCUSSION

In a Decision mailed on 23 November 2010, the petition under 37 CFR 1.181 filed on 24 September 2010 was dismissed, without prejudice, because

> Petitioner requests withdrawal of the holding of abandonment on the basis that "the application was timely filed," since the earlier priority claim allegedly was withdrawn. Petitioner has provided a copy of an "International Application Status Report" which reflects a priority date (INID code (31)) of 17 January 2007. However, review of the documents available at www.wipo.int reveals the presence of an indication that the priority claim may have been withdrawn as of 24 July 2008, but the document evidencing such withdrawal is not currently available from said web page, and petitioner has not provided a copy thereof. Petitioner may wish to introduce additional documentary evidence supporting the position that said priority claim was in fact withdrawn during the international phase.

In response, "applicants attach herewith a copy of PCT/IB/317 issued in PCT/AU2008/00062 which confirms the withdrawal of priority claim in the PCT application. By withdrawal the claim to priority in PCT/AU2008/00062, applicants submit that the filing of the U.S. National Phase application on July 16, 2010 is considered to be timely." Inspection of the accompanying copy of Form PCT/IB/317 confirms that "the priority claim made in the international application has been withdrawn." Accordingly, the period for payment of the basic national fee in the United States expired as of midnight on 19 July 2010 (since 17 July 2010 was a Saturday). Since the basic national fee was therefore timely paid on 16 July 2010, the Notification of Abandonment (Form PCT/DO/EO/909) mailed on 11 August 2010 was issued in error, and it is hereby **VACATED**. The holding of abandonment is **WITHDRAWN.**

DECISION

The petition is **GRANTED**.

This application is being forwarded to the Office of Patent Application Processing. This processing will include updating the electronic records of the USPTO (PALM) to reflect that the

application is pending, not abandoned. The processing will also include the preparation and mailing of a Notification of Missing Requirements (Form PCT/DO/EO/905) requiring the submission of an oath or declaration compliant with 37 CFR 1.497(a) and (b).

/George Dombroske/
George Dombroske
PCT Legal Examiner
Office of PCT Legal Administration
Tel: (571) 272-3283

UNITED STATES PATENT AND TRADEMARK OFFICE

Commissioner for Patents
United States Patent and Trademark Office
P.O. Box 1450
Alexandria, VA 22313-1450
www.uspto.gov

MAILED

JUN 20 2011

PCT LEGAL ADMINISTRATION

Workman Nydegger
1000 Eagle Gate Tower
60 East South Temple
Salt Lake City UT 84111

In re Application of	:	
PUDNEY et al.	:	
Application No.: 12/863,433	:	DECISION ON
PCT No.: PCT/GB09/50034	:	
Int. Filing Date: 19 January 2009	:	PETITION UNDER
Priority Date: 17 January 2008	:	
Attorney Docket No.: 17260.68	:	37 CFR 1.182
For: SECURITY IN TELE-COMMUNICATIONS SYSTEMS	:	

This is a decision on applicant's response to Notification of Missing Requirements, entitled "Petition under 37 CFR 1.182 to Correct Inventor's Name", filed on 15 March 2011 in the United States Patent and Trademark Office (USPTO). Applicant's request for a five month extension of time is granted.

BACKGROUND

On 16 July 2010, applicant filed a request for U.S. National Stage entry for international application PCT/GB09/50034.

On 16 August 2010, a Notification of Missing Requirements was mailed to applicant indicating, *inter alia*, that an oath or declaration in compliance with 37 CFR 1.497(a) and (b), was required. The Notification set a two month period for reply with extensions of time available.

On 15 March 2011, applicant filed the instant response along with an executed declaration. The declaration identified the fifth named inventor and was executed by ROBERT OLHEIDE-KOEHLER. The fifth inventor's name as listed on the International Application ROBERT KOEHLER differed from the name as identified on the declaration.

DISCUSSION

International application PCT/GB09/50034 identifies ROBERT KOEHLER as the fifth named inventor in the published international application. The declaration submitted in the

above referenced application identified ROBERT OLHEIDE-KOEHLER, making the declaration unacceptable.

Section 1893.01(e) of the Manual Of Patent Examining Procedure (MPEP) states the following:

> Where ... the name of an inventor indicated in the international application during the international phase has changed such that the inventor's name is different from the corresponding name indicated in an oath or declaration submitted under 37 CFR 1.497 for example, on account of marriage, then a petition under 37 CFR 1.182 will be required to accept the oath or declaration with the changed name. See MPEP § 605.04(c).

The present petition indicates that the name of the fifth inventor was changed due to his marriage. Accordingly, in order to correct the name of record for this inventor, a grantable petition under 37 CFR 1.182 is required.

Applicant's present petition includes the required $400 petition fee. Applicant's petition also includes the required confirmation that the correct name of the inventor is ROBERT OLHEIDE-KOEHLER, as listed on the declaration. Applicant also provided a copy of the marriage certificate. These materials satisfy the requirements for a grantable petition under 37 CFR 1.182 to change the name of record of the inventor to ROBERT OLHEIDE-KOEHLER.

CONCLUSION

Applicant's petition under 37 CFR 1.182 to change the name of record for the fifth named inventor to ROBERT OLHEIDE-KOEHLER is **GRANTED**.

Based on this correction, the executed declaration filed 15 March 2011 may be accepted in compliance with 37 CFR 1.497.

This application is being referred to the National Stage Processing Branch of the Office of PCT Operations for further processing in accordance with this decision. The date under 35 U.S.C. 371(c)(1), (c)(2), and (c)(4) is 15 March 2011.

/Cynthia M. Kratz/
Cynthia M. Kratz
Attorney Advisor
Office of PCT Legal Administration
Telephone: 571-272-3286

UNITED STATES PATENT AND TRADEMARK OFFICE

Commissioner for Patents
United States Patent and Trademark Office
P.O. Box 1450
Alexandria, VA 22313-1450
www.uspto.gov

McNeely, Hare & War LLP
5335 Wisconsin Ave, NW
Suite 440
Washington, D.C. 20015

MAILED
MAR 08 2011
PCT LEGAL ADMINISTRATION

In re Application of
DIMITROV et al.
Application No.: 12/863,442
PCT No.: PCT/BG2009/000001
Int. Filing Date: 05 February 2009
Priority Date: 19 February 2008
Attorney Docket no.: 19727272DOB
For: COMPUTERIZED DEVICE FOR SALE OF GOODS AND SERVICES

DECISION ON PETITION UNDER 37 CFR 1.137(b)

The petition to revive under 37 CFR 1.137(b) filed 25 February 2011 in the above-captioned application is hereby GRANTED as follows:

Applicant's statement that "the entire delay in filing the required reply from the due date for the reply until the filing of a grantable petition under 37 CFR 1.137(b) was unintentional" meets the requirements of 37 CFR 1.137(b)(3).

A review of the application file reveals that applicant has submitted the basic national fee and the requirements of 37 CFR 1.137(b) have been satisfied. Therefore, the request to revive the application abandoned under 35 U.S.C. 371(d) is granted as to the National stage in the United States of America.

This application is being returned to the United States Designated/Elected Office for processing in accordance with this decision.

Anthony Smith
Attorney-Advisor
Office of PCT Legal Administration
Tel: (571) 272-3298

Doc Code: PET.GREEN
Document Description: Petition for Green Tech Pilot

PTO/SB/420 (11-10)
Approved for use through 01/31/2011. OMB 0651-0062
U.S. Patent and Trademark Office; U. S. DEPARTMENT OF COMMERCE
Under the Paperwork Reduction Act of 1995, no persons are required to respond to a collection of information unless it displays a valid OMB control number.

PETITION TO MAKE SPECIAL UNDER THE GREEN TECHNOLOGY PILOT PROGRAM

Attorney Docket Number: 146193	Application Number (if known): 12/863,453	Filing date: July 19, 2010
First Named Inventor: Shinji ICHIKAWA		
Title: Noncontact Power Receiving Apparatus and Vehicle Including the Same		

APPLICANT HEREBY REQUESTS TO PARTICIPATE IN THE GREEN TECHNOLOGY PILOT PROGRAM FOR THE ABOVE-IDENTIFIED APPLICATION. See Instruction Sheet on page 2.

This petition must be timely filed electronically using the USPTO electronic filing system, EFS-Web.

1. By filing this petition:

   Applicant is requesting early publication: Applicant hereby requests early publication under 37 CFR 1.219 and the publication fee set forth in 37 CFR 1.18(d) accompanies this request.

2. By filing this petition: applicant is agreeing to make an election without traverse in a telephonic interview and elect an invention that meets the eligibility requirements for the Green Technology Pilot Program, if the Office determines that the claims are not obviously directed to a single invention. See Instruction Sheet.

3. This request is accompanied by statements of special status for the eligibility requirement.

4. The application contains no more than three (3) independent claims and twenty (20) total claims.

5. The application does not contain any multiple dependent claims.

6. Other attachments: Preliminary Amendment

Signature	Date January 25, 2011
Name (Print/Typed) Vishnu V. Ramaswamy	Registration Number 66,739

Note: *Signatures of all the inventors or assignees of record of the entire interest or their representative(s) are required in accordance with 37 CFR 1.33 and 11.18. Please see 37 CFR 1.4(d) for the form of the signature. If necessary, submit multiple forms for more than one signature see below*.*

☒ *Total of 2 forms are submitted.

The information is required to obtain or retain a benefit by the public which is to file (and by the USPTO to process) an application. Confidentiality is governed by 35 U.S.C. 122 and 37 CFR 1.11 and 1.14. This collection is estimated to take 12 hours to complete, including gathering, preparing, and submitting the completed application form to the USPTO. Time will vary depending upon the individual case. Any comments on the amount of time you require to complete this form and/or suggestions for reducing this burden, should be sent to the Chief Information Officer, U.S. Patent and Trademark Office, U.S. Department of Commerce, P.O. Box 1450, Alexandria, VA 22313-1450. DO NOT SEND FEES OR COMPLETED FORMS TO THIS ADDRESS. **SEND TO: Commissioner for Patents, P.O. Box 1450, Alexandria, VA 22313-1450.**

If you need assistance in completing the form, call 1-800-PTO-9199 and select option 2.

Under the Paperwork Reduction Act of 1995, no persons are required to respond to a collection of information unless it displays a valid OMB control number.

Instruction Sheet for Petition to Make Special Under the Green Technology Pilot Program

(Not to be Submitted to the USPTO)

The following is a summary of the requirements (for more information see the notices (i) "Pilot Program for Green Technologies Including Greenhouse Gas Reduction," (ii) "Elimination of Classification Requirement in the Green Technology Pilot Program," and (iii) "Expansion and Extension of the Green Technology Pilot Program," available on the USPTO web site at http:// www.uspto.gov/patents/init_events/green_tech.jsp):

1) The application must be a non-reissue, non-provisional utility application filed under 35 U.S.C. 111 (a), or an international application that has entered the national stage in compliance with 35 U.S.C. 371, irrespective of the filing date of the application. Reexamination proceedings are excluded from this pilot program.

2) The application must contain three or fewer independent claims and twenty or fewer total claims. The application must not contain any multiple dependent claims. For an application that contains more than three independent claims or twenty total claims, or multiple dependent claims, applicant must file a preliminary amendment in compliance with 37 CFR 1.121 to cancel the excess claims and/or the multiple dependent claims at the time the petition to make special is filed.

3) The claims must be directed to a single invention that materially enhances the quality of the environment, or that materially contributes to: (1) the discovery or development of renewable energy resources; (2) the more efficient utilization and conservation of energy resources; or (3) green house gas emission reduction (see the eligibility requirements of sections II and III of the notice (i) cited above). The petition must include a statement that, if the USPTO determines that the claims are directed to multiple inventions (e.g., in a restriction requirement), applicant will agree to make an election without traverse in a telephonic interview, and elect an invention that meets the eligibility requirements in section II or III of the notice (i) cited above.

4) The petition to make special must be timely filed electronically using the USPTO electronic filing system, EFS-Web, and selecting the document description of "Petition for Green Tech Pilot" on the EFS-Web screen. Applicant should use form PTO/SB/420, which is available as a Portable Document Format (PDF) fillable form in EFS-Web and on the USPTO Web site.

5) The petition to make special must be filed at least one day prior to the date that a first Office action (which may be an Office action containing only a restriction requirement) appears in the Patent Application Information Retrieval (PAIR) system. Applicant may check the status of the application using PAIR.

6) The petition to make special must be accompanied by a request for early publication in compliance with 37 CFR 1.219 and the publication fee set forth in 37 CFR 1.18(d).

Privacy Act Statement

The **Privacy Act of 1974 (P.L. 93-579)** requires that you be given certain information in connection with your submission of the attached form related to a patent application or patent. Accordingly, pursuant to the requirements of the Act, please be advised that: (1) the general authority for the collection of this information is 35 U.S.C. 2(b)(2); (2) furnishing of the information solicited is voluntary; and (3) the principal purpose for which the information is used by the U.S. Patent and Trademark Office is to process and/or examine your submission related to a patent application or patent. If you do not furnish the requested information, the U.S. Patent and Trademark Office may not be able to process and/or examine your submission, which may result in termination of proceedings or abandonment of the application or expiration of the patent.

The information provided by you in this form will be subject to the following routine uses:

1. The information on this form will be treated confidentially to the extent allowed under the Freedom of Information Act (5 U.S.C. 552) and the Privacy Act (5 U.S.C 552a). Records from this system of records may be disclosed to the Department of Justice to determine whether disclosure of these records is required by the Freedom of Information Act.
2. A record from this system of records may be disclosed, as a routine use, in the course of presenting evidence to a court, magistrate, or administrative tribunal, including disclosures to opposing counsel in the course of settlement negotiations.
3. A record in this system of records may be disclosed, as a routine use, to a Member of Congress submitting a request involving an individual, to whom the record pertains, when the individual has requested assistance from the Member with respect to the subject matter of the record.
4. A record in this system of records may be disclosed, as a routine use, to a contractor of the Agency having need for the information in order to perform a contract. Recipients of information shall be required to comply with the requirements of the Privacy Act of 1974, as amended, pursuant to 5 U.S.C. 552a(m).
5. A record related to an International Application filed under the Patent Cooperation Treaty in this system of records may be disclosed, as a routine use, to the International Bureau of the World Intellectual Property Organization, pursuant to the Patent Cooperation Treaty.
6. A record in this system of records may be disclosed, as a routine use, to another federal agency for purposes of National Security review (35 U.S.C. 181) and for review pursuant to the Atomic Energy Act (42 U.S.C. 218(c)).
7. A record from this system of records may be disclosed, as a routine use, to the Administrator, General Services, or his/her designee, during an inspection of records conducted by GSA as part of that agency's responsibility to recommend improvements in records management practices and programs, under authority of 44 U.S.C. 2904 and 2906. Such disclosure shall be made in accordance with the GSA regulations governing inspection of records for this purpose, and any other relevant (*i.e.*, GSA or Commerce) directive. Such disclosure shall not be used to make determinations about individuals.
8. A record from this system of records may be disclosed, as a routine use, to the public after either publication of the application pursuant to 35 U.S.C. 122(b) or issuance of a patent pursuant to 35 U.S.C. 151. Further, a record may be disclosed, subject to the limitations of 37 CFR 1.14, as a routine use, to the public if the record was filed in an application which became abandoned or in which the proceedings were terminated and which application is referenced by either a published application, an application open to public inspection or an issued patent.
9. A record from this system of records may be disclosed, as a routine use, to a Federal, State, or local law enforcement agency, if the USPTO becomes aware of a violation or potential violation of law or regulation.

PATENT APPLICATION

IN THE UNITED STATES PATENT AND TRADEMARK OFFICE

In re the Application of

Shinji ICHIKAWA

Application No.: 12/863,453

Filed: July 19, 2010

For: NONCONTACT POWER RECEIVING APPARATUS AND VEHICLE INCLUDING THE SAME

Group Art Unit:

Examiner:

Docket No.: 146193

STATEMENT OF MATERIALITY

Commissioner for Patents
P.O. Box 1450
Alexandria, VA 22313-1450

Sir:

Applicant respectfully submits that the above-identified application warrants special status. Specifically, the claims are directed to a noncontact power receiving apparatus for an electrically-powered vehicle, which allow for at least (1) the more efficient utilization and conservation of energy resources, and (2) the reduction of greenhouse gas emissions.

Accordingly, Applicant respectfully submits that this application be granted special status under the Green Technology Pilot Program.

Respectfully submitted,

James A. Oliff
Registration No. 27,075

Vishnu V. Ramaswamy
Registration No. 66,739

JAO:VVR/amt

Date: January 25, 2011

OLIFF & BERRIDGE, PLC
P.O. Box 320850
Alexandria, Virginia 22320-4850
Telephone: (703) 836-6400

DEPOSIT ACCOUNT USE AUTHORIZATION
Please grant any extension necessary for entry of this filing; Charge any fee due to our Deposit Account No. 15-0461

UNITED STATES PATENT AND TRADEMARK OFFICE

UNITED STATES DEPARTMENT OF COMMERCE
United States Patent and Trademark Office
Address: COMMISSIONER FOR PATENTS
P.O. Box 1450
Alexandria, Virginia 22313-1450
www.uspto.gov

APPLICATION NO.	FILING DATE	FIRST NAMED INVENTOR	ATTORNEY DOCKET NO.	CONFIRMATION NO.
12/863,453	07/19/2010	Shinji Ichikawa	146193	6535

25944 7590 02/09/2011
OLIFF & BERRIDGE, PLC
P.O. BOX 320850
ALEXANDRIA, VA 22320-4850

EXAMINER
ASSOUAD, PATRICK J

ART UNIT	PAPER NUMBER
2858	

NOTIFICATION DATE	DELIVERY MODE
02/09/2011	ELECTRONIC

Please find below and/or attached an Office communication concerning this application or proceeding.

The time period for reply, if any, is set in the attached communication.

Notice of the Office communication was sent electronically on above-indicated "Notification Date" to the following e-mail address(es):

OfficeAction25944@oliff.com
jarmstrong@oliff.com

UNITED STATES PATENT AND TRADEMARK OFFICE

Commissioner for Patents
United States Patent and Trademark Office
P.O. Box 1450
Alexandria, VA 22313-1450
www.uspto.gov

OLIFF & BERRIDGE, PLC
P.O. BOX 320850
ALEXANDRIA VA 22320-4850

In re Application of	:	
Shinji ICHIKAWA	:	DECISION ON PETITION
Application No. 12/863,453	:	TO MAKE SPECIAL UNDER
Filed: July 19, 2010	:	THE GREEN TECHNOLOGY
Attorney Docket No. 146193	:	PILOT PROGRAM

This is a decision on the petition under 37 CFR 1.102, filed on January 25, 2011, to make the above-identified application special under the pilot program for applications pertaining to Green Technologies as set forth 74 Federal Register Notice 64666 (December 8, 2009) and amended by 75 Federal Register Notice 28554 (May 21, 2010) and 75 Federal Register Notice 69049 (November 10, 2010).

The petition is **DISMISSED**.

If reconsideration of this decision is desired, a petition for reconsideration must be filed within ONE (1) MONTH OR THIRTY (30) DAYS from the mail date of this decision, whichever is longer. No extension of this time limit can be granted under 37 CFR 1.136(a) or (b). The petition for reconsideration should include an exhaustive attempt to provide the lacking item(s) noted below, since, after a decision on the petition for reconsideration, no further reconsideration or review of the matter will be undertaken by the Director.

A grantable petition to make an application special under 37 CFR 1.102 and the pilot program as set forth in 74 FR 64666 must be directed to a nonprovisional application filed under 35 USC 111(a) or be a national stage entry under 35 USC 371, exclusive of any reissue applications and be filed prior to the date of the notice, December 8, 2009.

In order to qualify for special status, the following requirements must be met. 1) The application must have no more than 3 independent claims and no more than 20 total claims. 2) The application must not contain any multiple dependent claims. 3) The petition must state the basis for seeking special status, i.e., the claimed invention either: A) materially enhances the quality of the environment or B) materially contributes to: i) the discovery or development of renewable energy resources, ii) the more efficient utilization and conservation of energy resources, or iii) greenhouse gas emission reduction. 4) If the disclosure is not clear on its face that the claimed invention materially contributes under category (A) or (B), the petition must be accompanied by a statement by the applicant, assignee, or an attorney/agent registered to practice before the Office explaining how the materiality standard is met. 5) A statement that applicant will agree to

make an election without traverse in a telephonic interview if a restriction requirement is made by the examiner. 6) The petition to make special must be filed electronically. 7) The petition must be filed at least one day prior to the date that a first Office Action appears in the Patent Application Information Retrieval (PAIR) system. 8) The petition must be accompanied by a request for early publication in compliance with 37 CFR 1.219 and include the publication fee as set forth in 37 CFR 1.18(d).

The requirement for a fee for consideration of the petition to make special for applications pertaining to Green Technologies has been waived.

The petition lacks item 4.

In regard to item 4, applicant's statement pertaining to how the materiality standard is met does not satisfy the requirements for this pilot. The instant petition includes a statement identifying the basis for the special status as contributing to more efficient utilization and conservation of energy and greenhouse gas emission reduction. However, it is not readily apparent how the claimed invention can provide more efficient utilization and conservation of energy resources. The recitation of the electrically powered vehicle in the claims is considered intended use. The materiality standard does not permit an applicant to speculate as to how a hypothetical end-user might specially apply the invention in a manner that could contribute greenhouse gas emission reduction. Any argument that the claimed invention can be used with an electrically powered vehicle is considered speculate as to how a hypothetical end-user might specially apply the claimed invention.

Any reconsideration of this decision should be submitted through the USPTO electronic filing system, EFS-Web, and selecting the document description of "Petition for Green Tech Pilot" on the EFS-Web screen.

Telephone inquiries concerning this decision should be directed to Lee W. Young at 571-272-4549.

The application is being forwarded to the Technology Center Art Unit 2858 for action in its regular turn.

Lee W. Young
Quality Assurance Specialist
Technology Center 2800

REMARKS

Claims 1-7 and 9-14 are pending in this application. By this Amendment, claim 13 is amended. Support for the amendment to claim 13 is found at, for example, page 10 of the specification as filed. No new matter is added.

The decision on Petition to Make Special Under the Green Technology Pilot Program states that the Decision on Petition under 37 C.F.R. §1.102, filed on January 25, 2011, to make the present application special under the pilot program for applications pertaining to Green Technologies is dismissed. The Decision asserts that the Petition was dismissed because "4) If the disclosure is not clear on its face that the claimed invention materially contributes under category (A) or (B), the Petition must be accompanied by a statement by the Applicant, Assignee, or an attorney/agent registered to practice before the Office explaining how the materiality standard is met." During a telephone interview with Quality Control Representative Young, on March 2, 2011, Mr. Young clarified that although claim 13 recited an electric vehicle, claim 13 was insufficiently tied to the operation of an electric vehicle. Mr. Young recommended amending claim 13 in a Preliminary Amendment to include "a motor driven by power from the noncontact power receiving apparatus" in order to qualify for the pilot program pertaining to Green Technologies.

Accordingly, Applicant amends claims 13 as suggested. Specifically, as suggested by Mr. Young, Applicant herein amends claim 13 to recite "a motor driven by power from the noncontact power receiving apparatus."

As indicated in the January 25, 2011 Petition, Applicant maintains:

1. Applicant is requesting early publication;

2. Applicant is agreeing to make an election without traverse in a telephonic interview and elect an invention that meets the eligibility requirements for the Green

Technology Pilot Program, if the Office Determines that the claims are not obviously directed to a single invention;

3. This application warrants special status as indicated in the STATEMENT OF MATERIALITY filed on January 25, 2011, and specifically, the claims are directed to a noncontact power receiving apparatus for an electrically-powered vehicle, which allow for at least (1) the more efficient utilization and conservation of energy resources, and (2) the reduction of greenhouse gas emissions;

4. This application contains no more than 3 independent claims and 20 total claims; and

5. This application does not contain any multiple dependent claims.

For all of the foregoing reasons, Applicant respectfully submits that this application be granted special status under the Green Technology Pilot Program.

Should the Examiner believe that anything further would be desirable in order to place this application in even better condition for allowance, the Examiner is invited to contact the undersigned at the telephone number set forth below.

Respectfully submitted,

James A. Oliff
Registration No. 27,075

Vishnu V. Ramaswamy
Registration No. 66,739

JAO:VVR/amt

Date: March 11, 2011

OLIFF & BERRIDGE, PLC
P.O. Box 320850
Alexandria, Virginia 22320-4850
Telephone: (703) 836-6400

DEPOSIT ACCOUNT USE AUTHORIZATION
Please grant any extension necessary for entry of this filing; Charge any fee due to our Deposit Account No. 15-0461

UNITED STATES PATENT AND TRADEMARK OFFICE

UNITED STATES DEPARTMENT OF COMMERCE
United States Patent and Trademark Office
Address: COMMISSIONER FOR PATENTS
P.O. Box 1450
Alexandria, Virginia 22313-1450
www.uspto.gov

APPLICATION NO.	FILING DATE	FIRST NAMED INVENTOR	ATTORNEY DOCKET NO.	CONFIRMATION NO.
12/863,453	07/19/2010	Shinji Ichikawa	146193	6535

25944 7590 09/14/2011
OLIFF & BERRIDGE, PLC
P.O. BOX 320850
ALEXANDRIA, VA 22320-4850

EXAMINER
ASSOUAD, PATRICK J

ART UNIT	PAPER NUMBER
2858	

NOTIFICATION DATE	DELIVERY MODE
09/14/2011	ELECTRONIC

Please find below and/or attached an Office communication concerning this application or proceeding.

The time period for reply, if any, is set in the attached communication.

Notice of the Office communication was sent electronically on above-indicated "Notification Date" to the following e-mail address(es):

OfficeAction25944@oliff.com
jarmstrong@oliff.com

UNITED STATES PATENT AND TRADEMARK OFFICE

Commissioner for Patents
United States Patent and Trademark Office
P.O. Box 1450
Alexandria, VA 22313-1450
www.uspto.gov

OLIFF & BERRIDGE, PLC
P.O. BOX 320850
ALEXANDRIA VA 22320-4850

In re Application of	:	
Shinji ICHIKAWA	:	DECISION ON PETITION
Application No. 12/863,453	:	TO MAKE SPECIAL UNDER
Filed: July 19, 2010	:	THE GREEN TECHNOLOGY
Attorney Docket No. 146193	:	PILOT PROGRAM

This is a decision on the petition under 37 CFR 1.102, filed on January 25, 2011 and renewed March 11, 2011, to make the above-identified application special under the pilot program for applications pertaining to Green Technologies as set forth 74 Federal Register Notice 64666 (December 8, 2009) and amended by 75 Federal Register Notice 28554 (May 21, 2010) and 75 Federal Register Notice 69049 (November 10, 2010).

The petition is **GRANTED**.

A grantable petition to make an application special under 37 CFR 1.102 and the pilot program as set forth in 74 FR 64666 must be directed to a nonprovisional application filed under 35 USC 111(a) or be a national stage entry under 35 USC 371, exclusive of any reissue applications.

In order to qualify for special status, the following requirements must be met. 1) The application must have no more than 3 independent claims and no more than 20 total claims. 2) The application must not contain any multiple dependent claims. 3) The petition must state the basis for seeking special status, i.e., the claimed invention either: A) materially enhances the quality of the environment or B) materially contributes to: i) the discovery or development of renewable energy resources, ii) the more efficient utilization and conservation of energy resources, or iii) greenhouse gas emission reduction. 4) If the disclosure is not clear on its face that the claimed invention materially contributes under category (A) or (B), the petition must be accompanied by a statement by the applicant, assignee, or an attorney/agent registered to practice before the Office explaining how the materiality standard is met. 5) A statement that applicant will agree to make an election without traverse in a telephonic interview if a restriction requirement is made by the examiner. 6) The petition to make special must be filed electronically. 7) The petition must be filed at least one day prior to the date that a first Office Action appears in the Patent Application Information Retrieval (PAIR) system. 8) The petition must be accompanied by a request for early publication in compliance with 37 CFR 1.219 and include the publication fee as set forth in 37 CFR 1.18(d).

The requirement for a fee for consideration of the petition to make special for applications pertaining to Green Technologies has been waived.

The instant petition complies with items 1 – 8 above. Accordingly, the above-identified application has been accorded "special" status.

Telephone inquires concerning this decision should be directed to Lee W. Young at 571-272-4549.

The application is being forwarded to the Technology Center Art Unit 2612 for action on the merits commensurate with this decision.

Lee W. Young
Quality Assurance Specialist
Technology Center 2600

UNITED STATES PATENT AND TRADEMARK OFFICE

Commissioner for Patents
United States Patent and Trademark Office
P.O. Box 1450
Alexandria, VA 22313-1450
www.uspto.gov

MAILED
23 NOV 2010
PCT LEGAL ADMINISTRATION

YOUNG & THOMPSON
209 Madison Street
Suite 500
Alexandria VA 22314

In re Application of	:	
SINIVAARA, et al.	:	DECISION ON PETITION
U.S. Application No.: 12/863,507	:	
PCT No.: PCT/FI2008/000013	:	UNDER 37 CFR 1.497(d)
Int. Filing Date: 22 January 2008	:	
Priority Date: None	:	
Atty Docket No.: 3502-1196	:	
For: A METHOD AND ARRANGEMENT FOR	:	
CONNECTING AN AD-HOC	:	
COMMUNICATION NETWORK TO A	:	
PERMANENT COMMUNICATION NETWORK	:	

This decision is in response to applicant's request to correct inventorship under 37 C.F.R. § 1.497(d) filed 07 October 2010 in the United States Patent and Trademark Office (USPTO).

BACKGROUND

On 22 January 2008, applicant filed international application PCT/FI2008/000013. A copy of the International Application was forwarded to the United States Patent and Trademark Office (USPTO) from the International Bureau (IB) on 30 July 2009. Pursuant to 37 CFR 1.495, the thirty-month period for paying the basic national fee in the United States expired at midnight on 22 July 2010.

On 19 July 2010, applicant filed a transmittal letter for entry into the national stage in the United States, which was accompanied by, among other items, payment of the requisite basic national fee as required by 35 U.S.C. 371(c)(1).

On 10 August 2010, applicant was mailed a NOTIFICATION OF MISSING REQUIREMENTS UNDER 35 U.S.C. 371 (Form PCT/DO/EO/905) informing applicant of the need to provide an executed oath or declaration of the inventors, in compliance with 37 CFR 1.497(a) and (b), identifying the application by the International application number and international filing date. Applicant was given two months to respond and advised that this time period could be extended with a proper petition and payment of fees.

On 07 October 2010, applicant filed the petition discussed herein to add Pasi Auranen as an inventor in the present U.S. National stage application.

DISCUSSION

A request under 37 CFR 1.497(d) [formally, 37 CFR 1.48] to correct an error in naming inventorship requires:

(1) a petition including a statement from each person being added or deleted as an inventor that the error in inventorship occurred without any deceptive intention on his or her part;

(2) an oath or declaration by the actual inventor(s) as required by 37 CFR 1.63;

(3) the fee set forth in 37 CFR 1.17(h); and

(4) if an assignment has been executed by any of the original named inventors, the written consent of the assignee in compliance with 37 CFR 3.73(b).

Applicant has satisfied all four items detailed above. However, a review of the application file finds that the International Bureau issued a "Notification of the Recording of a Change" (Form PCT/IB/306) on 15 July 2010 indicating that Pasi Auranen had been added to the international application as an applicant for the United States of America only and as an inventor for all designated states. As such, the present petition is dismissed as moot and the concurrently filed declaration listing Hasse Sinivaara and Pasi Auranen as inventors is accepted as satisfying 35 U.S.C. 371 (c)(4). Applicant's petition fee of $130.00 will be refunded.

CONCLUSION

For the reasons discussed above, the request under 37 CFR 1.497(d) is **DISMISSED as moot**.

This application is being forwarded to the United States Designated/Elected Office (US/DO/EO) for continued processing including the issuance of a Notification of Acceptance (Form PCT/DO/EO/903) indicating a 35 U.S.C. (c)(1), (c)(2) and (c)(4) date of **07 October 2010**.

Derek A. Putonen
Attorney Advisor
Office of PCT Legal Administration
Tel: (571) 272-3294

PTO/SB/20PCT-EP (05-10)
Approved for use through 01/31/2012. OMB 0651-0058
U.S. Patent and Trademark Office; U. S. DEPARTMENT OF COMMERCE
Under the Paperwork Reduction Act of 1995, no persons are required to respond to a collection of information unless it displays a valid OMB control number.

REQUEST FOR PARTICIPATION IN THE PATENT COOPERATION TREATY - PATENT PROSECUTION HIGHWAY (PCT-PPH) PILOT PROGRAM BETWEEN THE EUROPEAN PATENT OFFICE (EPO) AND THE USPTO

Application No:	12/863,521	Filing date:	July 19, 2010
First Named Inventor:	ANDREAS KOELLNBERGER		
Title of the Invention:	HYDROSILYLATION REACTIONS ACTIVATED THROUGH RADIATION		

THIS REQUEST FOR PARTICIPATION IN THE PCT-PPH PILOT PROGRAM ALONG WITH THE REQUIRED DOCUMENTS MUST BE SUBMITTED VIA EFS-WEB. INFORMATION REGARDING EFS-WEB IS AVAILABLE AT HTTP://WWW.USPTO.GOV/EBC/EFS_HELP.HTML

APPLICANT HEREBY REQUESTS PARTICIPATION IN THE PCT-PPH PROGRAM AND PETITIONS TO MAKE THE ABOVE-IDENTIFIED APPLICATION SPECIAL UNDER THE PCT-PPH PROGRAM.

The above-identified application is (1) a national stage entry of the corresponding PCT application, or (2) a national stage entry of another PCT application which claims priority to the corresponding PCT application, or (3) a national application that claims domestic/ foreign priority to the corresponding PCT application, or (4) a national application which forms the basis for the priority claim in the corresponding PCT application, or (5) a continuing application of a U.S. application that satisfies one of (1) to (4) above, or (6) a U.S. application that claims domestic benefit to a U.S. provisional application which forms the basis for the priority claim in the corresponding PCT application.

The corresponding PCT application number(s) is/are: PCT/EP2009/050715

The international filing date of the corresponding PCT application(s) is/are: JANUARY 22, 2009

I. List of Required Documents:

a. **A copy of the latest international work product (WO/ISA, WO/IPEA, or IPER) in the above–identified corresponding PCT application(s)**

- [x] Is attached
- [ ] Is not attached because the document is already in the U.S. application.

b. **A copy of all claims which were indicated as having novelty, inventive step and industrial applicability in the above-identified corresponding PCT application(s).**

- [x] Is attached.
- [ ] Is not attached because the document is already in the U.S. application.

c. **English translations of the documents in a. and b. above are attached (if the documents are not in the English language). A statement that the English translation is accurate is attached for the document in b. above.**

This collection of information is required by 35 U.S.C. 119, 37 CFR 1.55, and 37 CFR 1.102(d). The information is required to obtain or retain a benefit by the public, which is to file (and by the USPTO to process) an application. Confidentiality is governed by 35 U.S.C. 122 and 37 CFR 1.11 and 1.14. This collection is estimated to take 2 hours to complete, including gathering, preparing, and submitting the completed application form to the USPTO. Time will vary depending upon the individual case. Any comments on the amount of time you require to complete this form and/or suggestions for reducing this burden should be sent to the Chief Information Officer, U.S. Patent and Trademark Office, U.S. Department of Commerce, P.O. Box 1450, Alexandria, VA 22313-1450. DO NOT SEND FEES OR COMPLETED FORMS TO THIS ADDRESS.

Approved for use through 01/31/2012. OMB 0651-0058
U.S.Patent and Trademark Office; U.S. DEPARTMENT OF COMMERCE

Under the Paperwork Reduction Act of 1995, no persons are required to respond to a collection of information unless it displays a valid OMB control number.

REQUEST FOR PARTICIPATION IN THE PCT-PPH PILOT PROGRAM BETWEEN THE EPO AND THE USPTO

(continued)

Application No.:	12/863,521
First Named Inventor:	ANDREAS KOELLNBERGER

d. **(1) An information disclosure statement listing the documents cited in the international work products (ISR, WO/ISA, WO/IPEA, IPER) of the corresponding PCT application.**

☐ Is attached

☒ Has already been filed in the above-identified U.S. application on December 20, 2010

(2) Copies of all documents (except) for U.S. patents or U.S. patent application publications)

☐ Are attached.

☒ Have already been filed in the above-identified U.S. application on December 20, 2010

II. Claims Correspondence Table:

Claims in US Application	Patentable Claims in the corresponding PCT Application	Explanation regarding the correspondence
12	1,3	Claims 1 and 3 were combined to limit the number of independent claims,
		and rewritten in U.S. format
13	2	Rewritten in U.S. format
14	3	Rewritten as a dependent claim
15	4	Rewritten in U.S. format
16	5	Rewritten in U.S. format and to eliminate multiple dependency
17	6	Use claim rewritten in U.S. format
18	7	Rewritten in U.S. format and to eliminate multiple dependency
19	8	Rewritten in U.S. format and to eliminate multiple dependency
20	9	Rewritten in U.S. format and to eliminate multiple dependency
21	10	Rewritten in U.S. format and to eliminate multiple dependency
22	11	Rewritten in U.S. format and to eliminate multiple dependency

III. All the claims in the US application sufficiently correspond to the patentable claims in the corresponding PCT application.

Signature /William G. Conger/	Date February 18, 2011
Name (Print/Typed) William G. Conger	Registration Number 31209

Privacy Act Statement

The **Privacy Act of 1974 (P.L. 93-579)** requires that you be given certain information in connection with your submission of the attached form related to a patent application or patent. Accordingly, pursuant to the requirements of the Act, please be advised that: (1) the general authority for the collection of this information is 35 U.S.C. 2(b)(2); (2) furnishing of the information solicited is voluntary; and (3) the principal purpose for which the information is used by the U.S. Patent and Trademark Office is to process and/or examine your submission related to a patent application or patent. If you do not furnish the requested information, the U.S. Patent and Trademark Office may not be able to process and/or examine your submission, which may result in termination of proceedings or abandonment of the application or expiration of the patent.

The information provided by you in this form will be subject to the following routine uses:

1. The information on this form will be treated confidentially to the extent allowed under the Freedom of Information Act (5 U.S.C. 552) and the Privacy Act (5 U.S.C 552a). Records from this system of records may be disclosed to the Department of Justice to determine whether disclosure of these records is required by the Freedom of Information Act.
2. A record from this system of records may be disclosed, as a routine use, in the course of presenting evidence to a court, magistrate, or administrative tribunal, including disclosures to opposing counsel in the course of settlement negotiations.
3. A record in this system of records may be disclosed, as a routine use, to a Member of Congress submitting a request involving an individual, to whom the record pertains, when the individual has requested assistance from the Member with respect to the subject matter of the record.
4. A record in this system of records may be disclosed, as a routine use, to a contractor of the Agency having need for the information in order to perform a contract. Recipients of information shall be required to comply with the requirements of the Privacy Act of 1974, as amended, pursuant to 5 U.S.C. 552a(m).
5. A record related to an International Application filed under the Patent Cooperation Treaty in this system of records may be disclosed, as a routine use, to the International Bureau of the World Intellectual Property Organization, pursuant to the Patent Cooperation Treaty.
6. A record in this system of records may be disclosed, as a routine use, to another federal agency for purposes of National Security review (35 U.S.C. 181) and for review pursuant to the Atomic Energy Act (42 U.S.C. 218(c)).
7. A record from this system of records may be disclosed, as a routine use, to the Administrator, General Services, or his/her designee, during an inspection of records conducted by GSA as part of that agency's responsibility to recommend improvements in records management practices and programs, under authority of 44 U.S.C. 2904 and 2906. Such disclosure shall be made in accordance with the GSA regulations governing inspection of records for this purpose, and any other relevant (*i.e.*, GSA or Commerce) directive. Such disclosure shall not be used to make determinations about individuals.
8. A record from this system of records may be disclosed, as a routine use, to the public after either publication of the application pursuant to 35 U.S.C. 122(b) or issuance of a patent pursuant to 35 U.S.C. 151. Further, a record may be disclosed, subject to the limitations of 37 CFR 1.14, as a routine use, to the public if the record was filed in an application which became abandoned or in which the proceedings were terminated and which application is referenced by either a published application, an application open to public inspection or an issued patent.
9. A record from this system of records may be disclosed, as a routine use, to a Federal, State, or local law enforcement agency, if the USPTO becomes aware of a violation or potential violation of law or regulation.

UNITED STATES PATENT AND TRADEMARK OFFICE

UNITED STATES DEPARTMENT OF COMMERCE
United States Patent and Trademark Office
Address: COMMISSIONER FOR PATENTS
P.O. Box 1450
Alexandria, Virginia 22313-1450
www.uspto.gov

APPLICATION NO.	FILING DATE	FIRST NAMED INVENTOR	ATTORNEY DOCKET NO.	CONFIRMATION NO.
12/863,521	07/19/2010	Andreas Koellnberger	WAS1085PUSA	7117

22045 7590 04/18/2011
BROOKS KUSHMAN P.C.
1000 TOWN CENTER
TWENTY-SECOND FLOOR
SOUTHFIELD, MI 48075

EXAMINER
MOORE, MARGARET G

ART UNIT	PAPER NUMBER
1765	

MAIL DATE	DELIVERY MODE
04/18/2011	PAPER

Please find below and/or attached an Office communication concerning this application or proceeding.

The time period for reply, if any, is set in the attached communication.

UNITED STATES PATENT AND TRADEMARK OFFICE

Commissioner for Patents
United States Patent and Trademark Office
P.O. Box 1450
Alexandria, VA 22313-1450
www.uspto.gov

EL

April 19, 2011

In re application of	:	DECISION ON REQUEST TO
Koellnberger, Andreas	:	PARTICIPATE IN PATENT
Serial No. 12/863,521	:	PROSECUTION HIGHWAY
Filed: July 19, 2010	:	PROGRAM AND
For: **HYDROSILYLATION REACTIONS**	:	PETITION TO MAKE SPECIAL
ACTIVATED THROUGH RADIATION	:	UNDER 37 CFR 1.102(a)

This is a decision on the request for reconsideration to participate in the PCT Patent Prosecution Highway (PCT-PPH) pilot program and the petition under 37 CFR 1.102(a), filed February 18, 2011, to make the above-identified application special.

The request and petition are **GRANTED**.

A grantable request to participate in the PCT-PPH pilot program and petition to make special require:

(1) The U.S. application must disclose an eligible relationship to one or more PCT applications where the ISA or IPEA are the JPO, EPO, or USPTO;

(2) At least one claim in the PCT application has novelty, inventive step, and industrial applicability and must be free of any observations in Box VIII in the latest work product in the international stage or applicant must identify and explain why the claim(s) is/are not subject to the observation in Box VIII;

(3) Applicant must submit a copy of the claim(s) from the PCT application(s) that have novelty, inventive step, and industrial applicability along with an English translation thereof and a statement that the English translation is accurate, if the claims are not in the English language;

(4) All the claims in the U.S. application must sufficiently correspond or be amended to sufficiently correspond to the claim(s) that have novelty, inventive step, and industrial applicability in the PCT application(s);

(5) Examination of the U.S. application has not begun;

(6) Applicant must submit a copy of the latest international work product from the PCT application indicating that the claim(s) have novelty, inventive step, and industrial

applicability along with an English translation thereof if the latest international work product is not in the English language; and

(7) Applicant must submit an IDS listing the documents cited by the PCT examiner in the international work product along with copies of documents except U.S. patents or U.S. patent application publications.

The request to participate in the PPH program and petition comply with the above requirements. Accordingly, the above-identified application has been accorded "special" status.

The application is being forwarded to the examiner for action on the merits commensurate with this decision.

Any inquiry regarding this decision should be directed to Emily M. Le, Supervisory Patent Examiner, at (571) 272-0903.

All other inquiries concerning the examination or status of the application is accessible in the PAIR system at http://www.uspto.gov/ebc/index.html.

/Emily M. Le/

Emily M. Le
Supervisory Patent Examiner
Technology Center 1700

SPE RESPONSE FOR CERTIFICATE OF CORRECTION

DATE : February 24, 2012

TO SPE OF : ART UNIT 1765

SUBJECT : Request for Certificate of Correction for Appl. No.: 12/863521 Patent No.: 8088878

Co f C mailroom date: 02-15-12

Please respond to this request for a certificate of correction within 7 days.

FOR IFW FILES:

Please review the requested changes/corrections as shown in the **COCIN** document(s) in the IFW application image. No new matter should be introduced, nor should the scope or meaning of the claims be changed.

Please complete the response (see below) and forward the completed response to scanning using document code **COCX**.

FOR PAPER FILES:

Please review the requested changes/corrections as shown in the attached certificate of correction. Please complete this form (see below) and forward it with the file to:

Certificates of Correction Branch (CofC)
Randolph Square – 9D10-A
Palm Location 7580

Note: Check claim 5.

Magdalene Talley
Certificates of Correction Branch
571-272-0423

Thank You For Your Assistance

The request for issuing the above-identified correction(s) is hereby:
Note your decision on the appropriate box.

- ☑ **Approved** — **All** changes apply.
- ☐ **Approved in Part** — Specify below which changes **do not** apply.
- ☐ **Denied** — State the reasons for denial below.

Comments:

SPE

1765
Art Unit

- 1 OCT 2010

UNITED STATES PATENT AND TRADEMARK OFFICE

Commissioner for Patents
United States Patent and Trademark Office
P.O. Box 1450
Alexandria, VA 22313-1450
www.uspto.gov

OCCHIUTI ROHLICEK & TSAO, LLP
10 FAWCETT STREET
CAMBRIDGE MA 02138

In re Application of	:	
WIEMER et al.	:	
Application No.: 12/863,583	:	DECISION on
PCT No.: PCT/EP08/06997	:	
Int. Filing Date: 27 August 2008	:	PETITION
Priority Date: 31 October 2007	:	
Attorney Docket No.: 40047-005US1	:	UNDER 37 CFR 1.137(b)
For: INSPECTION DEVICE WITH ROTATABLE	:	
LIGHTING ELEMENT HOUSING	:	

The petition to revive under 37 CFR 1.137(b) filed 19 July 2010 in the above-captioned application is hereby **GRANTED** as follows:

Applicant's statement that "the entire delay in filing the required reply from the due date for the required reply until the filing of a grantable petition under 37 CFR 1.137(b) was unintentional" meets the requirements of 37 CFR 1.137(b)(3).

A review of the application file reveals that the basic national fee has been provided. The required petition fee of $1620 was also paid. Thus, the requirements of 37 CFR 1.137(b) have been satisfied. Therefore, the request to revive the application abandoned under 35 U.S.C. 371(d) is granted as to the National stage in the United States of America.

The application will be forwarded to the United States Designated/Elected Office for further processing including issuance of a Notification of Missing Requirements, indicating that an oath or declaration, in compliance with 37 CFR 1.497(a) and (b), and the surcharge for filing the oath or declaration after the thirty-month period are required.

/Cynthia M. Kratz/
Cynthia M. Kratz
Attorney Advisor
PCT Legal Office
Office of PCT Legal Administration
Telephone: (571) 272-3286
Facsimile: (571) 273-0459

2 3 SEP 2010

UNITED STATES PATENT AND TRADEMARK OFFICE

Commissioner for Patents
United States Patent and Trademark Office
P.O. Box 1450
Alexandria, VA 22313-1450
www.uspto.gov

FITCH EVEN TABIN & FLANNERY
120 SOUTH LASALLE STREET
SUITE 1600
CHICAGO IL 60603-3406

In re Application of SALICE Application No.: 12/863,588 PCT No.: NONE Deposit date: 19 July 2010 Attorney Docket No.: 8800-84883 For: DEVICE FOR DECELERATING THE ROTATION OF A HINGE IN PARTICULAR FOR FURNITURE....	NOTIFICATION

This application is before the Office of PCT Legal Administration for issues arising under 35 U.S.C. 371.

On 19 July 2010, applicant filed a request for entry into the national stage in the United States which was accompanied by, *inter alia*, the U.S. Basic National Fee. The papers were assigned serial number 12/863,588. The international application PCT/**EP**09/000868 was indicated on the transmittal letter (Form PTO-1390); however, the PCT international application number PCT/**US**09/00868 was identified on the Electronic Acknowledgement Receipt.

The Notification of Acceptance mailed on 17 August 2010 is hereby **VACATED**.

If applicant wishes that this application proceed, applicant must file a petition under 37 CFR 1.182 to correct the international application number.

A proper response must be filed within TWO (2) MONTHS from the mail date of this decision. Such response should include a cover letter entitled "Petition Under 37 CFR 1.182."

Any further correspondence with respect to this matter may be filed electronically via EFS-Web selecting the document description "Petition for review and processing by the PCT Legal Office" or by mail addressed to Mail Stop PCT, Commissioner for Patents, Office of PCT Legal Administration, P.O. Box 1450, Alexandria, Virginia 22313-1450, with the contents of the letter marked to the attention of the Office of PCT Legal Administration.

/Cynthia M. Kratz/
Cynthia M. Kratz
Attorney Advisor
Office of PCT Legal Administration
Telephone: (571)272-3286

MAILED

OCT 19 2010

PCT LEGAL ADMINISTRATION

UNITED STATES PATENT AND TRADEMARK OFFICE

Commissioner for Patents
United States Patent and Trademark Office
P.O. Box 1450
Alexandria, VA 22313-1450
www.uspto.gov

FITCH EVEN TABIN & FLANNERY
120 SOUTH LASALLE STREET
SUITE 1600
CHICAGO IL 60603-3406

In re Application of SALICE Application No.: 12/863,588 PCT No.: PCT/EP09/00868 Int'l Filing Date: 07 February 2010 Attorney Docket No.: 8800-84883 For: DEVICE FOR DECELERATING THE ROTATION OF A HINGE IN PARTICULAR FOR FURNITURE....	Decision on Petition Under 37 CFR 1.182

This is a decision on a petition under 37 CFR 1.182 filed in the United States Patent and Trademark Office on 29 September 2010 to correct the international application.

On 19 July 2010, applicant filed a request for entry into the national stage in the United States which was accompanied by, *inter alia*, the U.S. Basic National Fee. The papers were assigned serial number 12/863,588. However, the international application **PCT/EP09/00868** was indicated on the transmittal letter; while the PCT application number **PCT/US09/00868** was identified on the Electronic Acknowledgement Receipt.

On 23 September 2010, a notification was sent to applicant indicating the above.

On 29 September 2010, the instant petition under 37 CFR 1.182 was filed.

Applicant's petition under 37 CFR 1.182 to correct the international application no. to PCT/EP09/00868 on the national stage papers filed on 19 July 2010 is **GRANTED**. The $400 petition fee was paid.

The USPTO records will identify the present application **12/863,588** as the national stage of **PCT/EP09/00868.**

/Cynthia M. Kratz/
Cynthia M. Kratz
Attorney Advisor
Office of PCT Legal Administration
Telephone: (571)272-3286

UNITED STATES PATENT AND TRADEMARK OFFICE

Commissioner for Patents
United States Patent and Trademark Office
P.O. Box 1450
Alexandria, VA 22313-1450
www.uspto.gov

FITCH EVEN TABIN & FLANNERY
120 SOUTH LASALLE STREET
SUITE 1600
CHICAGO IL 60606-3406

MAILED

NOV 01 2011

OFFICE OF PETITIONS

Applicants: Luciano Salice
Appl. No.: 12/863,588
International Filing Date: February 7, 2009
Title: DEVICE FOR DECELERATING THE ROTATION OF A HINGE IN PARTICULAR FOR FURNITURE AND A HINGE PARTICULARLY FOR FURNITURE HAVING SAID DECELERATION DEVICE
Attorney Docket: 8800-84883
Pub. No.: US 20100293752 A1
Pub. Date: November 25, 2010

This is a decision on the request for a corrected patent application publication under 37 CFR 1.221(b), received on December 2, 2010, for the above-identified application.

The request is granted.

The corrected patent application publication will be published in due course, unless the patent issues before the application is republished.

Inquiries relating to this matter may be directed to Karen Creasy at (571) 272-3208.

/Christopher Bottorff/

Christopher Bottorff
Petitions Examiner
Office of Petitions

UNITED STATES PATENT AND TRADEMARK OFFICE

27 SEP 2010

Commissioner for Patents
United States Patent and Trademark Office
P.O. Box 1450
Alexandria, VA 22313-1450
www.uspto.gov

LEXYOUME IP GROUP, PLLC
5180 PARKSTONE DRIVE, SUITE 175
CHANTILLY VA 20151

In re Application of:
LEE, Young-Moo, et al.
U.S. Application No.: 12/863,594
PCT No.: PCT/KR2008/000850
International Filing Date: 13 February 2008
Priority Date: 27 November 2007
Attorney Docket No.: LPP20102367US
For: PROTON EXCHANGEPOLYMER MEMBRANE USING SURFACE TREATEMENT TECHNIQUE BASED ON DIRECT FLUORINATION ...

DECISION ON PETITION
(37 CFR 1.137(b))

The petition for revival under 37 CFR 1.137(b) filed 20 July 2010 in the above-captioned application is hereby **GRANTED** as follows:

International application PCT/KR2008/000850 became abandoned with respect to the United States at midnight on 27 May 2010 based on applicants' failure to request entry into the national stage in the United States and submit payment of the basic national fee prior to the expiration of thirty months from the priority date.

The present petition for revival was accompanied by payment of the required petition fee, as well as the "required reply" in the form of a request for entry into the national stage in the United States and payment of the small entity basic national fee. The petition also includes a statement that "the entire delay in filing the required reply from the due date for filing the required reply until the filing of a grantable petition under 37 CFR 1.137(b) was unintentional," satisfying the requirement of 37 CFR 1.137(b)(3).

Based on the above, the requirements of 37 CFR 1.137(b) have been satisfied. Accordingly, the request to revive the international application with respect to the United States is appropriately granted.

It is noted that the present petition was accompanied by an executed declaration in compliance with 37 CFR 1.497. Deposit Account No. 50-4054 will be charged the $65 small entity surcharge for filing the declaration later than thirty months after the priority date.

This application is being referred to the National Stage Processing Branch of the Office of PCT Operations for further processing in accordance with this decision. The date under 35 U.S.C. 371(c)(1), (c)(2), and (c)(4) is 20 July 2010.

Richard M. Ross
Attorney Advisor
Office of PCT Legal Administration
Telephone: (571) 272-3296

Doc Code: PET.GREEN
Document Description: Petition for Green Tech Pilot

PTO/SB/420 (05-10)
Approved for use through 01/31/2011. OMB 0651-0062
U.S. Patent and Trademark Office; U. S. DEPARTMENT OF COMMERCE
Under the Paperwork Reduction Act of 1995, no persons are required to respond to a collection of information unless it displays a valid OMB control number.

PETITION TO MAKE SPECIAL UNDER THE GREEN TECHNOLOGY PILOT PROGRAM

Attorney Docket Number: 46860US02	Application Number (if known): 12/863601	Filing date: February 2, 2009

First Named Inventor: Jan Larsen

Title: Methods for reducing enzyme consumption in second generation bioethanol fermentation in the presence of lignin.

APPLICANT HEREBY REQUESTS TO PARTICIPATE IN THE GREEN TECHNOLOGY PILOT PROGRAM FOR THE ABOVE-IDENTIFIED APPLICATION. See Instruction Sheet on page 2.

This petition must be timely filed electronically using the USPTO electronic filing system, EFS-Web.

1. By filing this petition:

   Applicant is requesting early publication: Applicant hereby requests early publication under 37 CFR 1.219 and the publication fee set forth in 37 CFR 1.18(d) accompanies this request.

2. By filing this petition: applicant is agreeing to make an election without traverse in a telephonic interview and elect an invention that meets the eligibility requirements set forth in the notice titled "Pilot Program for Green Technologies Including Greenhouse Gas Reduction," as modified by the notice titled "Elimination of Classification Requirement in the Green Technology Pilot Program," each of which was published in the Federal Register, if the Office determines that the claims are not obviously directed to a single invention.

3. This request is accompanied by statements of special status for the eligibility requirement.

4. The application contains no more than three (3) independent claims and twenty (20) total claims.

5. The application does not contain any multiple dependent claims.

6. Other attachments: Statement of basis for special status

Signature /Robert C. Casad, Jr./	Date Dec. 27, 2010
Name (Print/Typed) Robert C. Casad, Jr.	Registration Number 51535

***Note**: Signatures of all the inventors or assignees of record of the entire interest or their representative(s) are required in accordance with 37 CFR 1.33 and 11.18. Please see 37 CFR 1.4(d) for the form of the signature. If necessary, submit multiple forms for more than one signature, see below*.*

☑ *Total of 2 forms are submitted.

The information is required to obtain or retain a benefit by the public which is to file (and by the USPTO to process) an application. Confidentiality is governed by 35 U.S.C. 122 and 37 CFR 1.11 and 1.14. This collection is estimated to take 1 hour to complete, including gathering, preparing, and submitting the completed application form to the USPTO. Time will vary depending upon the individual case. Any comments on the amount of time you require to complete this form and/or suggestions for reducing this burden, should be sent to the Chief Information Officer, U.S. Patent and Trademark Office, U.S. Department of Commerce, P.O. Box 1450, Alexandria, VA 22313-1450. DO NOT SEND FEES OR COMPLETED FORMS TO THIS ADDRESS. **SEND TO: Commissioner for Patents, P.O. Box 1450, Alexandria, VA 22313-1450.**

If you need assistance in completing the form, call 1-800-PTO-9199 and select option 2.

Under the Paperwork Reduction Act of 1995, no persons are required to respond to a collection of information unless it displays a valid OMB control number.

Instruction Sheet for Petition to Make Special Under the Green Technology Pilot Program

(Not to be Submitted to the USPTO)

The following is a summary of the requirements (for more information see the notices (i) "Pilot Program for Green Technologies Including Greenhouse Gas Reduction" and (ii) "Elimination of Classification Requirement in the Green Technology Pilot Program," available on the USPTO web site at http://www.uspto.gov/patents/init_events/green_tech.jsp):

(1) The application must be a non-reissue, non-provisional utility application filed under 35 U.S.C. 111(a), or an international application that has entered the national stage in compliance with 35 U.S.C. 371. The application must be previously filed before the publication date of the notice cited above. Reexamination proceedings are excluded from this pilot program.

(2) The application must contain three or fewer independent claims and twenty or fewer total claims. The application must not contain any multiple dependent claims. For an application that contains more than three independent claims or twenty total claims, or multiple dependent claims, applicant must file a preliminary amendment in compliance with 37 CFR 1.121 to cancel the excess claims and/or the multiple dependent claims at the time the petition to make special is filed.

(3) The claims must be directed to a single invention that materially enhances the quality of the environment, or that materially contributes to: (1) the discovery or development of renewable energy resources; (2) the more efficient utilization and conservation of energy resources; or (3) green house gas emission reduction (see the eligibility requirements of sections II and III of the notice (i) cited above). The petition must include a statement that, if the USPTO determines that the claims are directed to multiple inventions (e.g., in a restriction requirement), applicant will agree to make an election without traverse in a telephonic interview, and elect an invention that meets the eligibility requirements in section II or III of the notice (i) cited above.

(4) The petition to make special must be timely filed electronically using the USPTO electronic filing system, EFS-Web, and selecting the document description of "Petition for Green Tech Pilot" on the EFS-Web screen. Applicant should use form PTO/SB/420, which is available as a Portable Document Format (PDF) fillable form in EFS-Web and on the USPTO Web site.

(5) The petition to make special must be filed at least one day prior to the date that a first Office action (which may be an Office action containing only a restriction requirement) appears in the Patent Application Information Retrieval (PAIR) system. Applicant may check the status of the application using PAIR.

(6) The petition to make special must be accompanied by a request for early publication in compliance with 37 CFR 1.219 and the publication fee set forth in 37 CFR 1.18(d).

Privacy Act Statement

The **Privacy Act of 1974 (P.L. 93-579)** requires that you be given certain information in connection with your submission of the attached form related to a patent application or patent. Accordingly, pursuant to the requirements of the Act, please be advised that: (1) the general authority for the collection of this information is 35 U.S.C. 2(b)(2); (2) furnishing of the information solicited is voluntary; and (3) the principal purpose for which the information is used by the U.S. Patent and Trademark Office is to process and/or examine your submission related to a patent application or patent. If you do not furnish the requested information, the U.S. Patent and Trademark Office may not be able to process and/or examine your submission, which may result in termination of proceedings or abandonment of the application or expiration of the patent.

The information provided by you in this form will be subject to the following routine uses:

1. The information on this form will be treated confidentially to the extent allowed under the Freedom of Information Act (5 U.S.C. 552) and the Privacy Act (5 U.S.C 552a). Records from this system of records may be disclosed to the Department of Justice to determine whether disclosure of these records is required by the Freedom of Information Act.
2. A record from this system of records may be disclosed, as a routine use, in the course of presenting evidence to a court, magistrate, or administrative tribunal, including disclosures to opposing counsel in the course of settlement negotiations.
3. A record in this system of records may be disclosed, as a routine use, to a Member of Congress submitting a request involving an individual, to whom the record pertains, when the individual has requested assistance from the Member with respect to the subject matter of the record.
4. A record in this system of records may be disclosed, as a routine use, to a contractor of the Agency having need for the information in order to perform a contract. Recipients of information shall be required to comply with the requirements of the Privacy Act of 1974, as amended, pursuant to 5 U.S.C. 552a(m).
5. A record related to an International Application filed under the Patent Cooperation Treaty in this system of records may be disclosed, as a routine use, to the International Bureau of the World Intellectual Property Organization, pursuant to the Patent Cooperation Treaty.
6. A record in this system of records may be disclosed, as a routine use, to another federal agency for purposes of National Security review (35 U.S.C. 181) and for review pursuant to the Atomic Energy Act (42 U.S.C. 218(c)).
7. A record from this system of records may be disclosed, as a routine use, to the Administrator, General Services, or his/her designee, during an inspection of records conducted by GSA as part of that agency's responsibility to recommend improvements in records management practices and programs, under authority of 44 U.S.C. 2904 and 2906. Such disclosure shall be made in accordance with the GSA regulations governing inspection of records for this purpose, and any other relevant (*i.e.*, GSA or Commerce) directive. Such disclosure shall not be used to make determinations about individuals.
8. A record from this system of records may be disclosed, as a routine use, to the public after either publication of the application pursuant to 35 U.S.C. 122(b) or issuance of a patent pursuant to 35 U.S.C. 151. Further, a record may be disclosed, subject to the limitations of 37 CFR 1.14, as a routine use, to the public if the record was filed in an application which became abandoned or in which the proceedings were terminated and which application is referenced by either a published application, an application open to public inspection or an issued patent.
9. A record from this system of records may be disclosed, as a routine use, to a Federal, State, or local law enforcement agency, if the USPTO becomes aware of a violation or potential violation of law or regulation.

Statement of basis for special status.

The application relates to methods of processing lignocellulosic biomass for conversion to ethanol. Accordingly, this "second generation bioethanol" technology is material to development of renewable energy sources and also to greenhouse gas reduction, where ethanol can be substituted for petroleum-based fuels.

/Robert C. Casad/

Robert Casad, Jr., Ph.D.
USPTO Registration Number: 51, 535
Inbicon A/S
Kraftværksvej 53
Fredericia, Denmark 7000

December 27, 2010

UNITED STATES PATENT AND TRADEMARK OFFICE

UNITED STATES DEPARTMENT OF COMMERCE
United States Patent and Trademark Office
Address: COMMISSIONER FOR PATENTS
P.O. Box 1450
Alexandria, Virginia 22313-1450
www.uspto.gov

APPLICATION NO.	FILING DATE	FIRST NAMED INVENTOR	ATTORNEY DOCKET NO.	CONFIRMATION NO.
12/863,601	07/20/2010	Jan Larsen	46860US02	8190

95469 7590 01/10/2011
Plougmann & Vingtoft A/S
Sundkrogsgade 9
PO Box 831
Copenhagen, 2100
DENMARK

EXAMINER

ART UNIT	PAPER NUMBER
1632	

MAIL DATE	DELIVERY MODE
01/10/2011	PAPER

Please find below and/or attached an Office communication concerning this application or proceeding.

The time period for reply, if any, is set in the attached communication.

UNITED STATES PATENT AND TRADEMARK OFFICE

Commissioner for Patents
United States Patent and Trademark Office
P.O. Box 1450
Alexandria, VA 22313-1450
www.uspto.gov

JAN 1 0 2011

Plougmann & Vingtoft A/S
Sundkrogsgade 9
PO Box 831
Copenhagen 2100 DK DENMARK

In re Application of	:	
LARSEN, Jan *et al.*	:	DECISION ON PETITION
Application No. 12/863601	:	TO MAKE SPECIAL UNDER
Filed: July 20, 2010	:	THE GREEN TECHNOLOGY
Attorney Docket No. 46860US02	:	PILOT PROGRAM

This is a decision on the petition under 37 CFR 1.102, filed December 27th, 2010, to make the above-identified application special under the pilot program for applications pertaining to Green Technologies as set forth in 74 Federal Register Notice 64666 (December 8, 2009) and amended by 75 Federal Register Notice 28554 (May 21, 2010) and 75 Federal Register Notice 69049 (November 10, 2010).

The petition is **GRANTED**.

A grantable petition to make an application special under 37 CFR 1.102 and the pilot program as set forth in 74 FR 64666 must be directed to a nonprovisional application filed under 35 USC 111(a) or be a national stage entry under 35 USC 371, exclusive of any reissue applications.

In order to qualify for special status, the following requirements must be met. 1) The application must have no more than 3 independent claims and no more than 20 total claims. 2) The application must not contain any multiple dependent claims. 3) The petition must state the basis for seeking special status, i.e., the claimed invention either: A) materially enhances the quality of the environment or B) materially contributes to: i) the discovery or development of renewable energy resources, ii) the more efficient utilization and conservation of energy resources, or iii) greenhouse gas emission reduction. 4) If the disclosure is not clear on its face that the claimed invention materially contributes under category (A) or (B), the petition must be accompanied by a statement by the applicant, assignee, or an attorney/agent registered to practice before the Office explaining how the materiality standard is met. 5) A statement that applicant will agree to make an election without traverse in a telephonic interview if a restriction requirement is made by the examiner. 6) The petition to make special must be filed electronically. 7) The petition must be filed at least one day prior to the date that a first Office Action appears in the Patent Application Information Retrieval (PAIR) system. 8) The petition must be accompanied by a request for early publication in compliance with 37 CFR 1.219 and include the publication fee as set forth in 37 CFR 1.18(d).

The requirement for a fee for consideration of the petition to make special for applications pertaining to Green Technologies has been waived.

The instant petition complies with items 1 – 8 above. Accordingly, the above-identified application has been accorded "special" status.

Telephone inquires concerning this decision should be directed to Manjunath Rao at 571-272-0939.

The application is being forwarded to the Technology Center Art Unit 1652 for action on the merits commensurate with this decision.

/Manjunath Rao/

Manjunath Rao
Supervisory Patent Examiner &
POC for TC 1600 Green Tech Petitions
Technology Center 1600

UNITED STATES PATENT AND TRADEMARK OFFICE

Commissioner for Patents
United States Patent and Trademark Office
P.O. Box 1450
Alexandria, VA 22313-1450
www.uspto.gov

JAN 1 0 2011

Plougmann & Vingtoft A/S
Sundkrogsgade 9
PO Box 831
Copenhagen 2100 DK DENMARK

In re Application of	:	
LARSEN, Jan *et al.*	:	DECISION ON PETITION
Application No. 12/863601	:	TO MAKE SPECIAL UNDER
Filed: July 20, 2010	:	THE GREEN TECHNOLOGY
Attorney Docket No. 46860US02	:	PILOT PROGRAM

This is a decision on the petition under 37 CFR 1.102, filed December 27th, 2010, to make the above-identified application special under the pilot program for applications pertaining to Green Technologies as set forth in 74 Federal Register Notice 64666 (December 8, 2009) and amended by 75 Federal Register Notice 28554 (May 21, 2010) and 75 Federal Register Notice 69049 (November 10, 2010).

The petition is **GRANTED**.

A grantable petition to make an application special under 37 CFR 1.102 and the pilot program as set forth in 74 FR 64666 must be directed to a nonprovisional application filed under 35 USC 111(a) or be a national stage entry under 35 USC 371, exclusive of any reissue applications.

In order to qualify for special status, the following requirements must be met. 1) The application must have no more than 3 independent claims and no more than 20 total claims. 2) The application must not contain any multiple dependent claims. 3) The petition must state the basis for seeking special status, i.e., the claimed invention either: A) materially enhances the quality of the environment or B) materially contributes to: i) the discovery or development of renewable energy resources, ii) the more efficient utilization and conservation of energy resources, or iii) greenhouse gas emission reduction. 4) If the disclosure is not clear on its face that the claimed invention materially contributes under category (A) or (B), the petition must be accompanied by a statement by the applicant, assignee, or an attorney/agent registered to practice before the Office explaining how the materiality standard is met. 5) A statement that applicant will agree to make an election without traverse in a telephonic interview if a restriction requirement is made by the examiner. 6) The petition to make special must be filed electronically. 7) The petition must be filed at least one day prior to the date that a first Office Action appears in the Patent Application Information Retrieval (PAIR) system. 8) The petition must be accompanied by a request for early publication in compliance with 37 CFR 1.219 and include the publication fee as set forth in 37 CFR 1.18(d).

The requirement for a fee for consideration of the petition to make special for applications pertaining to Green Technologies has been waived.

The instant petition complies with items 1 – 8 above. Accordingly, the above-identified application has been accorded "special" status.

Telephone inquires concerning this decision should be directed to Manjunath Rao at 571-272-0939.

The application is being forwarded to the Technology Center Art Unit 1652 for action on the merits commensurate with this decision.

/Manjunath Rao/

Manjunath Rao
Supervisory Patent Examiner &
POC for TC 1600 Green Tech Petitions
Technology Center 1600

PTO/SB/20PCT-EP (05-10)
Approved for use through 01/31/2012. OMB 0651-0058
U.S. Patent and Trademark Office; U.S. DEPARTMENT OF COMMERCE

Under the Paperwork Reduction Act of 1995, no persons are required to respond to a collection of information unless it displays a valid OMB control number.

REQUEST FOR PARTICIPATION IN THE PATENT COOPERATION TREATY - PATENT PROSECUTION HIGHWAY (PCT-PPH) PILOT PROGRAM BETWEEN THE EUROPEAN PATENT OFFICE (EPO) AND THE USPTO

Application No.:	12/863,605	Filing Date:	July 20, 2010
First Named Inventor:	Martin BIERI		
Attorney Docket No.:	146210		
Title of the Invention:	ENERGY SUPPLY DEVICE WITH ENERGY PANELS IN THE FORM OF ROOF TILES		

THIS REQUEST FOR PARTICIPATION IN THE PCT-PPH PILOT PROGRAM ALONG WITH THE REQUIRED DOCUMENTS MUST BE SUBMITTED VIA EFS-WEB. INFORMATION REGARDING EFS-WEB IS AVAILABLE AT HTTP://WWW.USPTO.GOV/EBC/EFS_HELP.HTML.

APPLICANT HEREBY REQUESTS PARTICIPATION IN THE PCT-PPH PROGRAM AND PETITIONS TO MAKE THE ABOVE-IDENTIFIED APPLICATION SPECIAL UNDER THE PCT-PPH PROGRAM.

The above-identified application is (1) a national stage entry of the corresponding PCT application, or (2) a national stage entry of another PCT application which claims priority to the corresponding PCT application, or (3) a national application that claims domestic/ foreign priority to the corresponding PCT application, or (4) a national application which forms the basis for the priority claim in the corresponding PCT application, or (5) a continuing application of a U.S. application that satisfies one of (1) to (4) above, or (6) a U.S. application that claims domestic benefit to a U.S. provisional application which forms the basis for the priority claim in the corresponding PCT application.

The corresponding PCT application number(s) is/are: PCT/EP2009/051742

The international date of the corresponding PCT application(s) is/are: February 15, 2009

I. **List of Required Documents:**

a. **A copy of the latest international work product (WO/ISA, WO/IPEA, or IPER) in the above–identified corresponding PCT application(s)**

☒ Is attached.

☐ Is not attached because the document is already in the U.S. application.

b. **A copy of all claims which were indicated as having novelty, inventive step and industrial applicability in the above-identified corresponding PCT application(s).**

☐ Is attached.

☒ Is not attached because the document is already in the U.S. application.

c. **English translations of the documents in a. and b. above are attached (if the documents are not in the English language). A statement that the English translation is accurate is attached for the document in b. above.**

This collection of information is required by 35 U.S.C. 119, 37 CFR 1.55, and 37 CFR 1.102(d). The information is required to obtain or retain a benefit by the public, which is to file (and by the USPTO to process) an application. Confidentiality is governed by 35 U.S.C. 122 and 37 CFR 1.11 and 1.14. This collection is estimated to take 2 hours to complete, including gathering, preparing, and submitting the completed application form to the USPTO. Time will vary depending upon the individual case. Any comments on the amount of time you require to complete this form and/or suggestions for reducing this burden should be sent to the Chief Information Officer, U.S. Patent and Trademark Office, U.S. Department of Commerce, P.O. Box 1450, Alexandria, VA 22313-1450. DO NOT SEND FEES OR COMPLETED FORMS TO THIS ADDRESS.

Under the Paperwork Reduction Act of 1995, no persons are required to respond to a collection of information unless it displays a valid OMB control number.

REQUEST FOR PARTICIPATION IN THE PCT-PPH PILOT PROGRAM BETWEEN THE EPO AND THE USPTO

(continued)

Application No.:	12/863,605
First Named Inventor:	Martin BIERI

d. **(1) An information disclosure statement listing the documents cited in the international work products (ISR, WO/ISA, WO/IPEA, IPER) of the corresponding PCT application.**

☐ Is attached.

☒ Has already been filed in the above-identified U.S. application on July 20, 2010.

(2) Copies of all documents (except) for U.S. patents or U.S. patent application publications)

☐ Are attached.

☒ Have already been filed in the above-identified U.S. application on July 20, 2010.

II. Claims Correspondence Table:

Claims in US Application	Patentable Claims in the corresponding PCT Application	Explanation regarding the correspondence
Claim 1	Claim 1	U.S. claim 1 is substantially identical to PCT claim 1.
Claim 2	Claim 2	U.S. claim 2 is substantially identical to PCT claim 2.
Claim 3	Claim 3	U.S. claim 3 is substantially identical to PCT claim 3. U.S. claim 3 differs from PCT claim 3 in that claim 3 does not include multiple dependencies.
Claim 4	Claim 4	U.S. claim 4 is substantially identical to PCT claim 4. U.S. claim 4 differs from PCT claim 4 in that claim 4 does not include multiple dependencies.
Claim 5	Claim 5	U.S. claim 5 is substantially identical to PCT claim 5. U.S. claim 5 differs from PCT claim 5 in that claim 5 does not include multiple dependencies.
Claim 6	Claim 6	U.S. claim 6 is substantially identical to PCT claim 6. U.S. claim 6 differs from PCT claim 6 in that claim 6 does not include multiple dependencies.
Claim 7	Claim 7	U.S. claim 7 is substantially identical to PCT claim 7. U.S. claim 7 differs from PCT claim 7 in that claim 7 does not include multiple dependencies.
Claim 8	Claim 8	U.S. claim 8 is substantially identical to PCT claim 8. U.S. claim 8 differs from PCT claim 8 in that claim 8 does not include multiple dependencies.
Claim 9	Claim 9	U.S. claim 9 is substantially identical to PCT claim 9.
Claim 10	Claim 10	U.S. claim 10 is substantially identical to PCT claim 10. U.S. claim 10 differs from PCT claim 10 in that claim 10 does not include multiple dependencies.
Claim 11	Claim 11	U.S. claim 11 is substantially identical to PCT claim 11. U.S. claim 11 differs from PCT claim 11 in that claim 11 does not include multiple dependencies.
Claim 12	Claim 12	U.S. claim 12 is substantially identical to PCT claim 12. U.S. claim 12 differs from PCT claim 12 in that claim 12 does not include multiple dependencies.
Claim 13	Claim 13	U.S. claim 13 is substantially identical to PCT claim 13. U.S. claim 13 differs from PCT claim 13 in that claim 13 does not include multiple dependencies.

Under the Paperwork Reduction Act of 1995, no persons are required to respond to a collection of information unless it displays a valid OMB control number.

Claim 14	Claim 14	U.S. claim 14 is substantially identical to PCT claim 14. U.S. claim 14 differs from PCT claim 14 in that claim 14 does not include multiple dependencies.
Claim 15	Claim 15	U.S. claim 15 is substantially identical to PCT claim 15. U.S. claim 15 differs from PCT claim 15 in that claim 15 does not include multiple dependencies.
Claim 16	Claim 16	U.S. claim 16 is substantially identical to PCT claim 16. U.S. claim 16 differs from PCT claim 16 in that claim 16 does not include multiple dependencies.

III. All the claims in the US application sufficiently correspond to the patentable claims in the corresponding PCT application.

Signature	Date November 15, 2010
Name (Print/Typed) James A. Oliff	Registration Number 27,073
Name (Print/Typed) Jomy Methipara	Registration Number 67,248

OLIFF & BERRIDGE, PLC
P.O. Box 320850
Alexandria, Virginia 22320-4850
Telephone: (703) 836-6400

DEPOSIT ACCOUNT USE AUTHORIZATION
Please grant any extension necessary for entry of this filing;
Charge any fee due to our Deposit Account No. 15-0461

Privacy Act Statement

The **Privacy Act of 1974 (P.L. 93-579)** requires that you be given certain information in connection with your submission of the attached form related to a patent application or patent. Accordingly, pursuant to the requirements of the Act, please be advised that: (1) the general authority for the collection of this information is 35 U.S.C. 2(b)(2); (2) furnishing of the information solicited is voluntary; and (3) the principal purpose for which the information is used by the U.S. Patent and Trademark Office is to process and/or examine your submission related to a patent application or patent. If you do not furnish the requested information, the U.S. Patent and Trademark Office may not be able to process and/or examine your submission, which may result in termination of proceedings or abandonment of the application or expiration of the patent.

The information provided by you in this form will be subject to the following routine uses:

1. The information on this form will be treated confidentially to the extent allowed under the Freedom of Information Act (5 U.S.C. 552) and the Privacy Act (5 U.S.C 552a). Records from this system of records may be disclosed to the Department of Justice to determine whether disclosure of these records is required by the Freedom of Information Act.
2. A record from this system of records may be disclosed, as a routine use, in the course of presenting evidence to a court, magistrate, or administrative tribunal, including disclosures to opposing counsel in the course of settlement negotiations.
3. A record in this system of records may be disclosed, as a routine use, to a Member of Congress submitting a request involving an individual, to whom the record pertains, when the individual has requested assistance from the Member with respect to the subject matter of the record.
4. A record in this system of records may be disclosed, as a routine use, to a contractor of the Agency having need for the information in order to perform a contract. Recipients of information shall be required to comply with the requirements of the Privacy Act of 1974, as amended, pursuant to 5 U.S.C. 552a(m).
5. A record related to an International Application filed under the Patent Cooperation Treaty in this system of records may be disclosed, as a routine use, to the International Bureau of the World Intellectual Property Organization, pursuant to the Patent Cooperation Treaty.
6. A record in this system of records may be disclosed, as a routine use, to another federal agency for purposes of National Security review (35 U.S.C. 181) and for review pursuant to the Atomic Energy Act (42 U.S.C. 218(c)).
7. A record from this system of records may be disclosed, as a routine use, to the Administrator, General Services, or his/her designee, during an inspection of records conducted by GSA as part of that agency's responsibility to recommend improvements in records management practices and programs, under authority of 44 U.S.C. 2904 and 2906. Such disclosure shall be made in accordance with the GSA regulations governing inspection of records for this purpose, and any other relevant (*i.e.*, GSA or Commerce) directive. Such disclosure shall not be used to make determinations about individuals.
8. A record from this system of records may be disclosed, as a routine use, to the public after either publication of the application pursuant to 35 U.S.C. 122(b) or issuance of a patent pursuant to 35 U.S.C. 151. Further, a record may be disclosed, subject to the limitations of 37 CFR 1.14, as a routine use, to the public if the record was filed in an application which became abandoned or in which the proceedings were terminated and which application is referenced by either a published application, an application open to public inspection or an issued patent.
9. A record from this system of records may be disclosed, as a routine use, to a Federal, State, or local law enforcement agency, if the USPTO becomes aware of a violation or potential violation of law or regulation.

PATENT COOPERATION TREATY

PCT

INTERNATIONAL PRELIMINARY REPORT ON PATENTABILITY

(Chapter I of the Patent Cooperation Treaty)

(PCT Rule 44*bis*)

Applicant's or agent's file reference MG 08-01 PCT	**FOR FURTHER ACTION**	See item 4 below
International application No. PCT/EP2009/051742	International filing date *(day/month/year)* 15 February 2009 (15.02.2009)	Priority date *(day/month/year)* 15 February 2008 (15.02.2008)
International Patent Classification (8th edition unless older edition indicated) See relevant information in Form PCT/ISA/237		
Applicant PANOTRON AG		

1. This international preliminary report on patentability (Chapter I) is issued by the International Bureau on behalf of the International Searching Authority under Rule 44 *bis*.1(a).

2. This REPORT consists of a total of 5 sheets, including this cover sheet.

   In the attached sheets, any reference to the written opinion of the International Searching Authority should be read as a reference to the international preliminary report on patentability (Chapter I) instead.

3. This report contains indications relating to the following items:

☒	Box No. I	Basis of the report
☐	Box No. II	Priority
☐	Box No. III	Non-establishment of opinion with regard to novelty, inventive step and industrial applicability
☐	Box No. IV	Lack of unity of invention
☒	Box No. V	Reasoned statement under Article 35(2) with regard to novelty, inventive step or industrial applicability; citations and explanations supporting such statement
☐	Box No. VI	Certain documents cited
☐	Box No. VII	Certain defects in the international application
☐	Box No. VIII	Certain observations on the international application

4. The International Bureau will communicate this report to designated Offices in accordance with Rules 44*bis*.3(c) and 93*bis*.1 but not, except where the applicant makes an express request under Article 23(2), before the expiration of 30 months from the priority date (Rule 44*bis* .2).

	Date of issuance of this report 07 September 2010 (07.09.2010)
The International Bureau of WIPO 34, chemin des Colombettes 1211 Geneva 20, Switzerland Facsimile No. +41 22 338 82 70	Authorized officer Yolaine Cussac e-mail: pt05.pct@wipo.int

PATENT COOPERATION TREATY

TRANSLATION

From the
INTERNATIONAL SEARCHING AUTHORITY

To:

PCT

WRITTEN OPINION OF THE
INTERNATIONAL SEARCHING AUTHORITY

(PCT Rule 43*bis*.1)

Date of mailing *(day/month/year)*	see form PCT/ISA/210
Applicant's or agent's file reference MG 08-01 PCT	FOR FURTHER ACTION See paragraph 2 below

International application No.	International filing date *(day/month/year)*	Priority date *(day/month/year)*
PCT/EP2009/051742	15.02.2009	15.02.2008

International Patent Classification (IPC) or both national classification and IPC
H01L31/058, F24J2/04, F24J2/24, E04D13/18

Applicant
PANOTON AG

1. This opinion contains indications relating to the following items:

- [x] Box No. I — Basis of the opinion
- [ ] Box No. II — Priority
- [ ] Box No. III — Non-establishment of opinion with regard to novelty, inventive step and industrial applicability
- [ ] Box No. IV — Lack of unity of invention
- [x] Box No. V — Reasoned statement under Rule 43*bis*.1(a)(i) with regard to novelty, inventive step or industrial applicability; citations and explanations supporting such statement
- [ ] Box No. VI — Certain documents cited
- [ ] Box No. VII — Certain defects in the international application
- [ ] Box No. VIII — Certain observations on the international application

2. **FURTHER ACTION**

If a demand for international preliminary examination is made, this opinion will be considered to be a written opinion of the International Preliminary Examining Authority ("IPEA") except that this does not apply where the applicant chooses an Authority other than this one to be the IPEA and the chosen IPEA has notified the International Bureau under Rule 66.1*bis*(b) that written opinions of this International Searching Authority will not be so considered.

If this opinion is, as provided above, considered to be a written opinion of the IPEA, the applicant is invited to submit to the IPEA a written reply together, where appropriate, with amendments, before the expiration of 3 months from the date of mailing of Form PCT/ISA/220 or before the expiration of 22 months from the priority date, whichever expires later.

For further options, see Form PCT/ISA/220.

3. For further details, see notes to Form PCT/ISA/220.

Name and mailing address of the ISA/EP	Date of completion of this opinion	Authorized officer
Facsimile No.		Telephone No.

WRITTEN OPINION OF THE INTERNATIONAL SEARCHING AUTHORITY

International application No.
PCT/EP2009/051742

Box No. I **Basis of this opinion**

1. With regard to the **language**, this opinion has been established on the basis of:

   ☒ the international application in the language in which it was filed

   ☐ a translation of the international application into _____ , which is the language of a translation furnished for the purposes of international search (Rules 12.3(a) and 23.1(b)).

2. ☐ This opinion has been established taking into account the **rectification of an obvious mistake** authorized by or notified to this Authority under Rule 91 (Rule 43*bis*.1(a))

3. With regard to any **nucleotide and/or amino acid sequence** disclosed in the international application and necessary to the claimed invention, this opinion has been established on the basis of:

   a. type of material

      ☐ a sequence listing

      ☐ table(s) related to the sequence listing

   b. format of material

      ☐ on paper

      ☐ in electronic form

   c. time of filing/furnishing

      ☐ contained in the international application as filed

      ☐ filed together with the international application in electronic form

      ☐ furnished subsequently to this Authority for the purposes of search

4. ☐ In addition, in the case that more than one version or copy of a sequence listing and/or table(s) relating thereto has been filed or furnished, the required statements that the information in the subsequent or additional copies is identical to that in the application as filed or does not go beyond the application as filed, as appropriate, were furnished.

5. Additional comments:

WRITTEN OPINION OF THE INTERNATIONAL SEARCHING AUTHORITY

International application No.
PCT/EP2009/051742

Box No. V **Reasoned statement under Rule 43bis.1(a)(i) with regard to novelty, inventive step or industrial applicability; citations and explanations supporting such statement**

1. Statement

Novelty (N)	Claims	1-16	YES
	Claims		NO
Inventive step (IS)	Claims	1-16	YES
	Claims		NO
Industrial applicability (IA)	Claims	1-16	YES
	Claims		NO

2. Citations and explanations:

1 Reference is made to the following document:
D1: EP 0 335 261 A (YOSHIDA KOGYO KK [JP])
4 October 1989 (1989-10-04) cited in the application

2 Document D1 is considered to be the closest prior art and discloses (the references between parentheses relate to said document):
an energy supply device comprising a plurality of energy panels (10) which are embodied as roof tiles (10a) and which cover part of a building and which each have an energy module (16) serving to absorb solar energy, said module being connected to a power supply line,
from which the subject matter of independent claim 1 differs in that:
a metallic pipeline is provided at one external side of the building, said pipeline supporting the energy panels by means of a mechanical and thermal connection.

2.1 The subject matter of claim 1 is therefore novel (PCT Article 33(2)).

Box No. V **Reasoned statement under Rule 43bis.1(a)(i) with regard to novelty, inventive step or industrial applicability; citations and explanations supporting such statement**

The problem addressed by the present invention can therefore be considered that of providing an improved energy supply device.

2.2 The solution to this problem, as proposed in claim 1 of the present application, involves an inventive step (PCT Article 33(3)) for the following reasons:
The energy supply device is improved by virtue of the fact that a pipeline supports the energy panels by means of a mechanical and thermal connection and a cable channel for the electrical lines is provided.

2.3 Claims 2-16 are dependent on claim 1 and therefore likewise meet the requirements of the PCT in respect of novelty and inventive step.

UNITED STATES PATENT AND TRADEMARK OFFICE

UNITED STATES DEPARTMENT OF COMMERCE
United States Patent and Trademark Office
Address: COMMISSIONER FOR PATENTS
P.O. Box 1450
Alexandria, Virginia 22313-1450
www.uspto.gov

APPLICATION NO.	FILING DATE	FIRST NAMED INVENTOR	ATTORNEY DOCKET NO.	CONFIRMATION NO.
12/863,605	07/20/2010	Martin Bieri	146210	8200

25944 7590 12/08/2010
OLIFF & BERRIDGE, PLC
P.O. BOX 320850
ALEXANDRIA, VA 22320-4850

EXAMINER

ART UNIT	PAPER NUMBER
2875	

NOTIFICATION DATE	DELIVERY MODE
12/08/2010	ELECTRONIC

Please find below and/or attached an Office communication concerning this application or proceeding.

The time period for reply, if any, is set in the attached communication.

Notice of the Office communication was sent electronically on above-indicated "Notification Date" to the following e-mail address(es):

OfficeAction25944@oliff.com
jarmstrong@oliff.com

UNITED STATES PATENT AND TRADEMARK OFFICE

Commissioner for Patents
United States Patent and Trademark Office
P.O. Box 1450
Alexandria, VA 22313-1450
www.uspto.gov

OLIFF & BERRIDGE, PLC
P.O. BOX 320850
ALEXANDRIA VA 22320-4850

In re Application of	
Martin BIERI	**: DECISION ON REQUEST TO**
Application No.: 12/863,605	**: PARTICIPATE IN THE PATENT**
Filed: 20 July 2010	**: PROSECUTION HIGHWAY**
Attorney Docket No.: 146210	**: PROGRAM AND PETITION**
For: ENERGY SUPPLY DEVICE WITH	**: TO MAKE SPECIAL UNDER**
ENERGY PANELS IN THE FORM OF	**: 37 CFR 1.102(a)**
ROOF TILES	

This is a decision on the request to participate in the PCT Patent Prosecution Highway (PCT-PPH) pilot program and the petition under 37 CFR 1.102(a), filed 15 November 2010, to make the above-identified application special.

The request and petition are **DISMISSED**.

Discussion

A grantable request to participate in the PCT-PPH pilot program and petition to make special require:

(1) The U.S. application must have an eligible relationship to one or more PCT applications where the ISA or IPEA are the JPO, EPO, KIPO, or USPTO;

(2) At least one claim in the PCT application has novelty, inventive step, and industrial applicability and must be free of any observations in Box VIII in the latest work product in the international stage or applicant must identify and explain why the claim(s) is/are not subject to the observation in Box VIII;

(3) Applicant must submit a copy of the claim(s) from the PCT application(s) that have novelty, inventive step, and industrial applicability along with an English translation thereof and a statement that the English translation is accurate, if the claims are not in the English language;

(4) All the claims in the U.S. application must sufficiently correspond or be amended to sufficiently correspond to the claim(s) that have novelty, inventive step, and industrial applicability in the PCT application(s);

(5) Examination of the U.S. application has not begun;

(6) Applicant must submit a copy of the latest international work product from the PCT application indicating that the claim(s) have novelty, inventive step, and industrial applicability

along with an English translation thereof and a statement that the English translation is accurate if the latest international work product is not in the English language;

(7) Applicant must submit an IDS listing the documents cited by the PCT examiner in the international work product along with copies of documents except U.S. patents or U.S. patent application publications.

Conditions (1-2) and (4-7) above are considered to have been met. However, the request to participate in the PPH pilot program and petition fails meet condition (3).

Regarding the requirement of condition (3), applicant has failed submit at least a statement that the English translation of the claims from the PCT application is accurate.

Applicant is given **ONE** opportunity within a time period of **ONE MONTH or THIRTY DAYS**, whichever is longer, from the mailing date of this decision to correct the deficiencies. **NO EXTENSION OF TIME UNDER 37 CFR 1.136 IS PERMITTED.** If the deficiencies are not corrected with the time period given, the application will await action in its regular turn.

Response must be filed via the Electronic Filing System (EFS) with the Document Code PPH.PCT.652. Any preliminary amendments and IDS submitted with the PPH documents must be separately indexed as a preliminary amendment and IDS, respectively.

Telephone inquiries concerning this decision should be directed to Lee W. Young at 571-272-4549.

All other inquiries concerning the examination or status of the application is accessible in the PAIR system at http://www.uspto.gov/ebc/index.html.

Lee W. Young
TQAS Technology Center 2800 - Semiconductors,
Electrical & Optical Systems & Components

PATENT APPLICATION

IN THE UNITED STATES PATENT AND TRADEMARK OFFICE

In re the Application of

Martin BIERI Group Art Unit: 2875

Application No.: 12/863,605

Filed: July 20, 2010 Docket No.: 146210

For: ENERGY SUPPLY DEVICE WITH ENERGY PANELS IN THE FORM OF ROOF TILES

RESPONSE TO DECISION ON REQUEST TO PARTICIPATE IN THE PATENT PROSECUTION HIGHWAY PROGRAM AND PETITION TO MAKE SPECIAL UNDER 37 C.F.R. §1.102(a)

Commissioner for Patents
P.O. Box 1450
Alexandria, VA 22313-1450

Sir:

In reply to the December 8, 2010 Decision on Request to Participate in the Patent Prosecution Highway Program (copy attached), please consider the following remarks.

On December 8, 2010, the Patent Office dismissed the Request to Participate in the Patent Cooperation Treaty - Patent Prosecution Highway (PCT-PPH) Pilot Program and Petition to Make Special Under 37 C.F.R. §1.102(a). The Patent Office indicated that seven conditions must be met to participate in this program. The Patent Office acknowledged that conditions 1, 2 and 4-7 are considered to have been met. However, the Patent Office asserts that the Request to Participate in the PCT-PPH Pilot Program and Petition filed on November 15, 2010 fails to meet condition 3.

Condition 3 of the PCT-PPH Pilot Program and Petition requires that Applicant must submit a copy of the claims from the PCT application that have novelty, inventive step, and

industrial applicability along with an English translation thereof, and a statement that the English translation is accurate, if the claims are not in the English language.

In response to the assertions of the Patent Office, Applicant confirms that the U.S. claims of the above-identified application as filed with this application (that is, prior to the Preliminary Amendment, which removed multiple dependencies, reference numerals, etc.) are an accurate English translation of the corresponding PCT application claims that have been found to have novelty, inventive step, and industrial applicability.

Applicant submits that all formalities required to participate in the PCT-PPH Pilot Program are now fulfilled. Thus, it is respectfully requested that the Request to Participate in the PCT-PPH Pilot Program and Petition be approved.

Should the Examiner have any questions or comments regarding this matter, the Examiner is invited to contact the undersigned at the telephone number set forth below.

Respectfully submitted,

James A. Oliff
Registration No. 27,075

Jomy J. Methipara
Registration No. 67,248

JAO:JXM/axl

Attachment:
Copy of Decision on Request to Participate in the Patent Prosecution Highway Program and Petition to Make Special Under 37 C.F.R. 1.102(a)

Date: December 16, 2010

OLIFF & BERRIDGE, PLC
P.O. Box 320850
Alexandria, Virginia 22320-4850
Telephone: (703) 836-6400

DEPOSIT ACCOUNT USE AUTHORIZATION
Please grant any extension necessary for entry of this filing; Charge any fee due to our Deposit Account No. 15-0461

UNITED STATES PATENT AND TRADEMARK OFFICE

UNITED STATES DEPARTMENT OF COMMERCE
United States Patent and Trademark Office
Address: COMMISSIONER FOR PATENTS
P.O. Box 1450
Alexandria, Virginia 22313-1450
www.uspto.gov

APPLICATION NO.	FILING DATE	FIRST NAMED INVENTOR	ATTORNEY DOCKET NO.	CONFIRMATION NO.
12/863,605	07/20/2010	Martin Bieri	146210	8200

25944 7590 01/20/2011
OLIFF & BERRIDGE, PLC
P.O. BOX 320850
ALEXANDRIA, VA 22320-4850

EXAMINER

ART UNIT	PAPER NUMBER
2875	

NOTIFICATION DATE	DELIVERY MODE
01/20/2011	ELECTRONIC

Please find below and/or attached an Office communication concerning this application or proceeding.

The time period for reply, if any, is set in the attached communication.

Notice of the Office communication was sent electronically on above-indicated "Notification Date" to the following e-mail address(es):

OfficeAction25944@oliff.com
jarmstrong@oliff.com

UNITED STATES PATENT AND TRADEMARK OFFICE

Commissioner for Patents
United States Patent and Trademark Office
P.O. Box 1450
Alexandria, VA 22313-1450
www.uspto.gov

OLIFF & BERRIDGE, PLC
P.O. BOX 320850
ALEXANDRIA VA 22320-4850

In re Application of
Martin BIERI
Application No.: 12/863,605
Filed: 20 July 2010
Attorney Docket No.: 146210
For: ENERGY SUPPLY DEVICE WITH ENERGY PANELS IN THE FORM OF ROOF TILES

: DECISION ON REQUEST TO
: PARTICIPATE IN THE PATENT
: PROSECUTION HIGHWAY
: PROGRAM AND PETITION
: TO MAKE SPECIAL UNDER
: 37 CFR 1.102(a)

This is a decision on the request to participate in the PCT Patent Prosecution Highway (PCT-PPH) pilot program and the petition under 37 CFR 1.102(a), filed 15 November 2010 and renewed on 16 December 2010, to make the above-identified application special.

The request and petition are **GRANTED**.

Discussion

A grantable request to participate in the PCT-PPH pilot program and petition to make special require:

(1) The U.S. application must disclose an eligible relationship to one or more PCT applications where the ISA or IPEA are the JPO, EPO, KIPO, or USPTO;

(2) At least one claim in the PCT application has novelty, inventive step, and industrial applicability and must be free of any observations in Box VIII in the latest work product in the international stage or applicant must identify and explain why the claim(s) is/are not subject to the observation in Box VIII;

(3) Applicant must submit a copy of the claim(s) from the PCT application(s) that have novelty, inventive step, and industrial applicability along with an English translation thereof and a statement that the English translation is accurate, if the claims are not in the English language;

(4) All the claims in the U.S. application must sufficiently correspond or be amended to sufficiently correspond to the claim(s) that have novelty, inventive step, and industrial applicability in the PCT application(s);

(5) Examination of the U.S. application has not begun;

(6) Applicant must submit a copy of the latest international work product from the PCT application indicating that the claim(s) have novelty, inventive step, and industrial applicability

along with an English translation thereof and a statement that the English translation is accurate if the latest international work product is not in the English language;

(7) Applicant must submit an IDS listing the documents cited by the PCT examiner in the international work product along with copies of documents except U.S. patents or U.S. patent application publications.

The request to participate in the PCT-PPH pilot program and petition comply with the above requirements. Accordingly, the above-identified application has been accorded "special" status.

Telephone inquiries concerning this decision should be directed to Lee W. Young at 571-272-4549.

All other inquiries concerning the examination or status of the application is accessible in the PAIR system at http://www.uspto.gov/ebc.index.html.

This application will be forwarded to the examiner for action on the merits commensurate with this decision once this application's formality reviews have been completed.

Lee W. Young
TQAS Technology Center 2800 - Semiconductors,
Electrical & Optical Systems & Components

UNITED STATES PATENT AND TRADEMARK OFFICE

UNITED STATES DEPARTMENT OF COMMERCE
United States Patent and Trademark Office
Address: COMMISSIONER FOR PATENTS
P.O. Box 1450
Alexandria, Virginia 22313-1450
www.uspto.gov

APPLICATION NO.	FILING DATE	FIRST NAMED INVENTOR	ATTORNEY DOCKET NO.	CONFIRMATION NO.
12/863,623	08/12/2010	Vilho Eriksson	E0226.0209/P209	8370

7590 03/29/2012
DICKSTEIN SHAPIRO LLP
1825 EYE STREET NW
Washington, DC 20006-5403

EXAMINER
HELVEY, PETER N.

ART UNIT	PAPER NUMBER
3782	

MAIL DATE	DELIVERY MODE
03/29/2012	PAPER

DECISION DISMISSING PETITION UNDER 37 CFR 1.138(d)

The declaration of express abandonment will not be recognized

This is in response to the petition under 37 CFR 1.138(d), requesting for a refund of any previously paid search fee and excess claims fee in the above-identified application.

The petition is dismissed.

The express abandonment will **not** be recognized for the reason(s) indicated below:

1. ☐ The petition was not filed in sufficient time to permit the appropriate officials to recognize the abandonment before an examination has been made of the application. See 37 CFR 1.138(d).
2. ☐ The petition was not signed by a party authorized by 37 CFR 1.33(b)(1), (3) or (4).
3. ☑ The application is not an application filed under 35 U.S.C. 111(a) on or after December 8, 2004.
4. ☐ The petition for express abandonment under 1.138(d) is dismissed because the applicant did not pay any search fee and excess claims fees in the above-identified application.

Telephone inquiries should be directed to the Office of Data Management at (571) 272-4200.

Nani Farmer

Patent Publication Branch
Office of Data Management

FORM PET651D (Rev. 08/07)

UNITED STATES PATENT AND TRADEMARK OFFICE

Commissioner for Patents
United States Patent and Trademark Office
P.O. Box 1450

MAILED

MAR 21 2012

OFFICE OF PETITIONS

SUGHRUE MION, PLLC
2100 PENNSYLVANIA AVENUE, N.W.
SUITE 800
WASHINGTON DC 20037

In re Application of	: DECISION ON REQUEST TO
Ryo KONDO et al.	: PARTICIPATE IN PPH PROGRAM
Application No. 12/863,628	: AND PETITION TO MAKE SPECIAL
Filed: July 20, 2010	: UNDER 37 CFR 1.102(a)
Atty. Docket No.: Q119685	:

For: MISFIRE DETECTION APPARATUS FOR INTERNAL COMBUSTION ENGINE

This is a decision on the request to participate in the Patent Prosecution Highway (PPH) program and the petition under 37 CFR 1.102(a), filed March 8, 2012 to make the above-identified application special.

The petition and request are **DISMISSED**.

A grantable request to participate in the PPH (patent prosecution highway) program and petition to make special require:

1. The U.S. application is a Paris convention application that either validly claims priority under 35 U.S.C. 119(a) and 37 CFR 1.55 to one or more application filed in the JPO or to a PCT application that contains no priority claims, or is a national stage application under the PCT that either validly claims priority to an application filed in the JPO or to a PCT application that contains no priority claims, or that contains no priority claim, or is a bypass application filed under 35 U.S.C. 111(a) which validly claims benefit under 35 U.S.C. 120 to a PCT application that validly claims priority to an application filed in the JPO, to a PCT application that contains no priority claims, or contain no priority claim;

2. Applicant must ensure all the claims in the U.S. application sufficiently correspond or amended to sufficiently correspond to the allowable/patentable claim(s) in the JPO application and submit a claim correspondence table in English;

3. Examination of the U.S. application has not begun;

4. Applicant must submit a copy of the office action(s) just prior to the "Decision to Grant a Patent" from each of the JPO application(s) containing the allowable/patentable claim(s), or if the allowable/patentable claim(s) are from a "Notification of Reasons for Refusal" then the Notification of Reasons for Refusal, or if the JPO application is a first action allowance then no office action from the JPO is necessary should be indicated on the request/petition form, and an English language translation of the JPO Office action if submitted; and

5. Applicant must submit an IDS listing the documents cited by the JPO examiner in the JPO office action, unless already submitted in this application, and copies of the documents except U.S. patents or U.S. patent application publications, unless already submitted in this application.

Requirements (1) and (3) to (5) above are considered to have been met. However, the request to participate in the PPH program and petition fail to meet requirement (2).

Regarding requirement (2), the claims in the U.S. application apparently do not correspond to the allowable/patentable claims in the JPO application. Specifically, claim 1 in the U.S. application includes a "first dodging threshold ...fluctuation"; such limitation is not apparent in the allowable/patentable JPO claims.

Applicant is given **ONE** opportunity with a time period of **ONE MONTH** or **THIRTY DAYS**, whichever is longer, from the mailing date of this decision to correct the deficiencies. **NO EXTENSION OF TIME UNDER 37 CFR 1.136 IS PERMITTED**. If the deficiencies are not corrected within the time period given, the application will await action in its regular turn.

Response must be filed via the Electronic Filing System (EFS) using the document description: Petition to make special under Patent Pros. Hwy. Any preliminary amendments and IDS submitted with the PPH documents must be separately indexed as a preliminary amendment and IDS, respectively.

Telephone inquiries concerning this decision should be directed to Robert DeWitty, Petition Attorney, Office of Petitions at 571-272-8427.

All other inquiries concerning the examination or status of the application is accessible in the PAIR system at http://www.uspto.gov/ebc/index.html.

David Bucci
Petitions Examiner
Office of Petitions

UNITED STATES PATENT and TRADEMARK OFFICE

COMMISSIONER FOR PATENTS
UNITED STATES PATENT AND TRADEMARK OFFICE
P.O BOX 1450
ALEXANDRIA, VA 22313-1450
www.uspto.gov

PATENT CENTRAL LLC
Stephan A. Pendorf
1401 Hollywood Boulevard
Hollywood FL 33020

MAILED

DEC 03 2010

PCT LEGAL ADMINISTRATION

In re Application of	:	DECISION ON
HAHN et al	:	
Application No.: 12/863,631	:	
PCT No.: PCT/EP09/00334	:	PAPERS FILED
Int. Filing Date: 21 January 2009	:	
Priority Date: 03 March 2008	:	
Attorney's Docket No.: 3926.348	:	UNDER 37 CFR 1.42
For: STRAY LIGHT AND SUN SHIED...	:	
MOTOR VEHICLE	:	

This is a decision on the declaration filed 20 July 2010, which has been treated as a request for status under 37 CFR 1.42.

BACKGROUND

On 20 July 2010, applicants filed a transmittal letter for entry into the national stage in the United States which was accompanied by, inter alia, the requisite basic national fee as required by 35 U.S.C. 371(c)(1), and an executed declaration as required by 35 U.S.C. 371(c)(4).

The declaration is signed Anke DUDECK, Lars DUDECK, and Sven DUDECK as heirs/legal representatives to deceased co-inventor Ingo DUDECK.

DISCUSSION

The declaration is unacceptable at this time because it is not clear that Anke DUDECK, Lars DUDECK, and Sven DUDECK are the sole heirs or just the legal representatives for the deceased co-inventor, Ingo DUDECK. (see MPEP § 409.01(a)).

That is, there may be other heirs who are required to also sign the declaration. The declaration must indicate that they are the sole heirs for the deceased inventor or is the legal representatives (not including the term heirs next to it so as to avoid confusion) for the deceased inventor, Ingo DUDECK, to accept the application under 37 CFR 1.42.

CONCLUSION

For the above reasons, the request for status under 37 CFR 1.42 is **not accepted**.

If reconsideration on the merits of this petition is desired, a proper reply must be filed within TWO (2) MONTHS from the mail date of this decision. Failure to respond will result in the abandonment of the application. Any reconsideration request should include a cover letter entitled "Renewed Request Under 37 CFR 1.42." Extensions of time are available under 37 CFR 1.136(a).

Any further correspondence with respect to this matter may be filed electronically via EFS-Web selecting the document description "Petition for review and processing by the PCT Legal Office" or by mail addressed to Mail Stop PCT, Commissioner for Patents, Office of PCT Legal Administration, P.O. Box 1450, Alexandria, Virginia 22313-1450, with the contents of the letter marked to the attention of the Office of PCT Legal Administration.

Rafael Bacares
PCT Legal Examiner
PCT Legal Office
Tel: (571) 272-3276
Fax: (571) 273-0459

UNITED STATES PATENT and TRADEMARK OFFICE

COMMISSIONER FOR PATENTS
UNITED STATES PATENT AND TRADEMARK OFFICE
P.O BOX 1450
ALEXANDRIA, VA 22313-1450
www.uspto.gov

PATENT CENTRAL LLC
Stephan A. Pendorf
1401 Hollywood Boulevard
Hollywood FL 33020

MAILED
MAR 30 2011
PCT LEGAL ADMINISTRATION

In re Application of	:	DECISION ON
HAHN et al	:	
Application No.: 12/863,631	:	
PCT No.: PCT/EP09/00334	:	PAPERS FILED
Int. Filing Date: 21 January 2009	:	
Priority Date: 03 March 2008	:	
Attorney's Docket No.: 3926.348	:	UNDER 37 CFR 1.42
For: STRAY LIGHT AND SUN SHIED... MOTOR VEHICLE	:	

This is a decision on the "RENEWED REQUEST UNDER 37 CFR 1.42" filed 01 February 2011.

BACKGROUND

In a decision from this Office on 01 February 2011, the request filed on 20 July 2010 was dismissed. The decision indicated that it was unclear if there were other heirs for the deceased co-inventor Ingo DUDECK.

The decision indicated, inter alia, that the residence and mailing address of the legal representative (sole heir) and the deceased inventor had not been provided as required under 37 CFR 1.63.

On 01 February 2011, applicants filed the current response, indicating that the enclosed executed declaration states that Anke DUDECK, Lars DUDECK, and Sven DUDECK are the sole heirs.

DISCUSSION

A review of the application file however reveals that the declaration does not comply with 37 C.F.R. §1.497(b)(2).

Because the co-joint inventor Ingo DUDECK is deceased and Anke DUDECK, Lars DUDECK, and Sven DUDECK are the sole heirs (legal representatives) for the deceased inventor, 37 C.F.R. §1.497(b)(2) indicates that "[i]f the person making the oath or the declaration or any supplemental or oath or declaration is not the inventor (§§1.42, 1.43, or 1.47), the oath or declaration shall state the relationship of the person to the inventor, and, upon information and belief, the facts which the inventor would have been required to state (the inventor's citizenship and so on). If the person signing the oath or declaration is the legal representative (sole heir) of a deceased inventor, the oath or declaration shall also state that the person is a legal representative and the citizenship, residence and mailing address of the legal representative." (see MPEP § 409.01)

In this instance, the declaration has provided sole heirs requirements but not the deceased co-inventor, Ingo DUDECK. Thus, citizenship (must), the residence and mailing address of the deceased co-inventor has to be provided in the declaration as required under 37 C.F.R. §1.497(b)(2).

Consequently, applicants have not satisfied the requirements under 37 CFR 1.42.

CONCLUSION

For the above reasons, the request for status under 37 CFR 1.42 is **not accepted**.

Applicant is required to provide an oath or declaration in compliance with 37 CFR 1.497(a)-(b) within TWO (2) MONTHS from the mail date of this Decision. Any reconsideration request should include a cover letter entitled "Second Renewed Submission Under 37 CFR 1.42." Extensions of time are available under 37 CFR 1.136(a).

Any further correspondence with respect to this matter may be filed electronically via EFS-Web selecting the document description "Petition for review and processing by the PCT Legal Office" or by mail addressed to Mail Stop PCT, Commissioner for Patents, Office of PCT Legal Administration, P.O. Box 1450, Alexandria, Virginia 22313-1450, with the contents of the letter marked to the attention of the Office of PCT Legal Administration.

Rafael Bacares
PCT Legal Examiner
PCT Legal Administration Office
Tel: (571) 272-3276
Fax: (571) 273-0459

UNITED STATES PATENT and TRADEMARK OFFICE

COMMISSIONER FOR PATENTS
UNITED STATES PATENT AND TRADEMARK OFFICE
P.O BOX 1450
ALEXANDRIA, VA 22313-1450
www.uspto.gov

PATENT CENTRAL LLC
Stephan A. Pendorf
1401 Hollywood Boulevard
Hollywood FL 33020

MAILED
JUN 17 2011
PCT LEGAL ADMINISTRATION

In re Application of	:	DECISION ON
HAHN et al	:	
Application No.: 12/863,631	:	
PCT No.: PCT/EP09/00334	:	PAPERS FILED
Int. Filing Date: 21 January 2009	:	
Priority Date: 03 March 2008	:	
Attorney's Docket No.: 3926.348	:	UNDER 37 CFR 1.42
For: STRAY LIGHT AND SUN SHIED... MOTOR VEHICLE	:	

This is a decision on the "SECOND RENEWED REQUEST UNDER 37 CFR 1.42" filed 18 April 2011.

BACKGROUND

In a decision from this Office on 30 March 2011, the request filed on 01 February 2011 was dismissed.

On 18 April 2011, applicants filed the current response an unexecuted declaration with the mailing and residence information for the deceased inventor Ingo DUDECK.

DISCUSSION

A review of the application file however reveals that the declaration does comply with 37 C.F.R. §1.497(b)(2), and that the necessary information for the mailing address of the deceased inventor Ingo DUDECK had been provided on the ADS.

Consequently, applicants have satisfied the requirements under 37 CFR 1.42.

CONCLUSION

The renewed submission filed under 37 CFR 1.42 is **ACCEPTED**.

The application is being returned to the United States Designated/Elected Office (DO/EO/US) for processing in accordance with this decision.

Rafael Bacares
PCT Legal Examiner
PCT Legal Administration Office
Tel: (571) 272-3276
Fax: (571) 273-0459

UNITED STATES PATENT AND TRADEMARK OFFICE

UNITED STATES DEPARTMENT OF COMMERCE
United States Patent and Trademark Office
Address: COMMISSIONER FOR PATENTS
P.O. Box 1450
Alexandria, Virginia 22313-1450
www.uspto.gov

APPLICATION NO.	FILING DATE	FIRST NAMED INVENTOR	ATTORNEY DOCKET NO.	CONFIRMATION NO.
12/863,637	07/20/2010	Robert M. Jones	20750-0089US1	8407

26204 7590 09/21/2011
FISH & RICHARDSON P.C.
P.O. BOX 1022
MINNEAPOLIS, MN 55440-1022

EXAMINER
LOEWE, SUN JAE Y

ART UNIT	PAPER NUMBER
1622	

NOTIFICATION DATE	DELIVERY MODE
09/21/2011	ELECTRONIC

Please find below and/or attached an Office communication concerning this application or proceeding.

The time period for reply, if any, is set in the attached communication.

Notice of the Office communication was sent electronically on above-indicated "Notification Date" to the following e-mail address(es):

PATDOCTC@fr.com

UNITED STATES PATENT AND TRADEMARK OFFICE

Commissioner for Patents
United States Patent and Trademark Office
P.O. Box 1450
Alexandria, VA 22313-1450
www.uspto.gov

SEP 21 2011

FISH & RICHARDSON P.C.
P.O. BOX 1022
MINNEAPOLIS MN 55440-1022

In re Application of:	:
Jones et al.	: PETITION DECISION
Serial No.: 12/863,637	:
Filed: July 20, 2010	:
Attorney Docket No.: **20750-0089US1**	

This is in response to the petition under 37 CFR § 1.181 filed September 19, 2011, requesting withdrawal of the finality of the Office action of July 28, 2011.

BACKGROUND

The examiner mailed to applicants a non-final Office action on December 17, 2010. Claims 1-38 and 46 were pending and were rejected. Claims 36-38 were rejected under 35 USC 112, first paragraph, as non-enabling. Claims 1-35 were also rejected under 35 USC 112, first paragraph, as non-enabling.

In reply to the non-final Office action of December 17, 2010, applicants filed remarks and arguments, along with an amendment on June 17, 2011 which included the cancellation of claim 36, an amendment to claim 37, and the addition of new claims 47-48.

The examiner mailed to applicants a final Office action on July 28, 2011. Claims 1-38 and new claims 46-48 were pending and listed as "rejected" on the PTOL-326 form. The examiner states in the Office action that the 35 USC 112, first paragraph, rejections were maintained. The examiner also states "All claims remain rejected, including the newly added claims".

In response thereto, applicants filed this petition on September 19, 2011 under 37 CFR § 1.181, requesting withdrawal of the Office action of July 28, 2011.

DISCUSSION

The petition and the file history have been carefully considered.

In the petition filed on September 19, 2011, applicants argue "The final Office Action dated July 28, 2011 fails to specify the grounds for rejection for claims 46-48, fails to provide precise reasons for the rejection of claims 37-38, and fails to acknowledge or answer the substance of Applicants' remarks made in response to a rejection. For the foregoing reasons, the final Office Action does not comply with 37 C.F.R. § 1.104(b) and MPEP 707.07(f). Therefore, Applicants respectfully request that the Director to find that the Office Action dated July 28, 2011 was incomplete and not properly made final and request that the Director remand the case to the Examiner to prepare a complete non-final office action."

Applicant's points have been carefully considered and are persuasive that the Office action of July 28, 2011 is neither complete nor clear.

DECISION

The petition is **GRANTED.**

The Office action mailed July 28, 2011 is hereby vacated and withdrawn. This application will be forwarded to the examiner to take an action consistent with the decision herein, namely issuance of a new and complete Office action wherein all claims and arguments are addressed in detail, and appropriate rejections are clearly set forth.

Should there be any questions about this decision please contact Marianne C. Seidel, by letter addressed to Director, TC 1600, at the address listed above, or by telephone at 571-272-0584 or by facsimile sent to the general Office facsimile number, 571-273-8300.

Remy Yucel
Director, Technology Center 1600

UNITED STATES PATENT AND TRADEMARK OFFICE

Commissioner for Patents
United States Patent and Trademark Office
P.O. Box 1450
Alexandria, VA 22313-1450
www.uspto.gov

MAILED

JUN 27 2011

PCT LEGAL ADMINISTRATION

HARNESS, DICKEY & PIERCE, P.L.C.
P.O. BOX 828
BLOOMFIELD HILLS MI 48303

In re Application of	:	
HIRTSIEFER	:	DECISION ON PETITION
Serial No.: 12/863,671	:	
PCT No.: PCT/EP2009/000104	:	UNDER 37 CFR 1.47(b)
Int. Filing Date: 12 January 2009	:	
Priority Date: 21 January 2008	:	
Atty Docket No.: 6039PA-000366/US/NP	:	
For: HOLDING ELEMENT FOR ADJUSTING A LID	:	
OF A PIECE OF FURNITURE	:	

This decision is in response to the "PETITION UNDER 37 C.F.R. 1.47(b) ON BEHALF OF A NONSIGNING INVENTOR" filed 29 September 2010 in the United States Patent and Trademark Office (USPTO). Applicant has provided payment of the requisite $200.00 petition fee.

BACKGROUND

On 12 January 2009, applicant filed international application PCT/EP2009/000104 which claimed priority to an earlier application filed 21 January 2008. A copy of the international application was communicated to the United States Patent and Trademark Office from the International Bureau on 30 July 2009. Pursuant to 37 CFR 1.495, the deadline for payment of the basic national fee in the United States was to expire 30 months from the priority date, 21 July 2010.

On 20 July 2010, applicant filed a transmittal letter for entry into the national stage in the United States accompanied by the requisite basic national fee; an English translation of the international application as filed; an Application Data Sheet; an Information Disclosure Statement and a preliminary amendment.

On 18 August 2010, applicant was mailed a NOTIFICATION OF MISSING REQUIREMENTS UNDER 35 U.S.C. 371 (Form PCT/DO/EO/905) informing applicant of the need to provide an executed oath or declaration of the inventor, in compliance with 37 CFR 1.497(a) and (b), identifying the application by the International application number and international filing date. Applicant was given two months to respond and advised that this time period could be extended with a proper petition and payment of fees.

On 29 September 2010, applicant responded with the present petition.

DISCUSSION

A petition under 37 CFR 1.47(b) must be accompanied by: (1) the requisite petition fee under 37 CFR 1.17(g); (2) factual proof that the inventor refuses to execute the application or cannot be reached after diligent effort; (3) a statement of the last known address of the non-signing inventor; (4) an oath or declaration executed by the 37 CFR 1.47(b) applicant on behalf of and as an agent for the non-signing inventor; (5) proof of proprietary interest in the application; and, (6) a showing that such action is necessary to preserve the rights of the parties or to prevent irreparable damages. Applicant has satisfied items (1), (2), (5) and (6).

As to item (3), applicant has not provided a statement confirming the last known address of the inventor. This is necessary so that the USPTO can instruct the inventor as to his rights if the application proceeds pursuant to 37 CFR 1.47.

Regarding item (4), the filed declaration has been signed by Mr. Thomas Muller on behalf of the corporate assignee and non-signing inventor as an "agent" and "German representative" of the assignee. However, it is not readily apparent from these titles that Mr. Muller can execute legal documents on behalf of the assignee. In cases where an attorney or agent executes a declaration on behalf of a corporate assigned said individual can self-certify before the office in the form of a signed statement that he is in fact authorized to sign legal papers for the corporation.

In light of the above, it is not possible to grant applicant's petition at this time.

CONCLUSION

For the reasons stated above, applicant's petition under 37 CFR 1.47(b) is **DISMISSED**, without prejudice.

Any reconsideration on the merits of this petition must be filed within **TWO (2) MONTHS** from the mail date of this decision. Any reconsideration request should include a cover letter entitled "Renewed Petition Under 37 CFR 1.47(b)." No additional petition fee is required. Extensions of time may be obtained under 37 CFR 1.136(a).

Any further correspondence with respect to this matter should be directed to Mail Stop PCT, Commissioner for Patents, Office of PCT Legal Administration, P.O. Box 1450, Alexandria, Virginia 22313-1450, with the contents of the letter marked to the attention of the Office of PCT Legal Administration or electronically filed utilizing the USPTO's EFS-Web electronic filing system.

Derek A. Putonen
Attorney Advisor
Office of PCT Legal Administration
Tel: (571) 272-3294

UNITED STATES PATENT AND TRADEMARK OFFICE

Commissioner for Patents
United States Patent and Trademark Office
Washington, D.C. 20231
www.uspto.gov

MAILED

NOV 01 2011

PCT LEGAL ADMINISTRATION

HARNESS, DICKEY & PIERCE, P.L.C.
P.O. BOX 828
BLOOMFIELD HILLS MI 48303

In re Application of	:	
HIRTSIEFER	:	DECISION ON PETITION
Serial No.: 12/863,671	:	
PCT No.: PCT/EP2009/000104	:	UNDER 37 CFR 1.47(b)
Int. Filing Date: 12 January 2009	:	
Priority Date: 21 January 2008	:	
Atty Docket No.: 6039PA-000366/US/NP	:	
For: HOLDING ELEMENT FOR ADJUSTING A LID	:	
OF A PIECE OF FURNITURE	:	

This decision is in response to applicant's renewed petition under 37 CFR 1.47(b) filed 26 September 2011 in the United States Patent and Trademark Office (USPTO).

BACKGROUND

On 27 June 2011, applicant was mailed a decision dismissing applicant's petition under 37 CFR 1.47(b). Applicant was afforded two months to file any request for reconsideration.

On 26 September 2011, applicant filed the renewed petition discussed herein accompanied by a petition for a one-month extension of time and payment of the extension of time fee. The response is timely filed.

DISCUSSION

As detailed in the decision mailed 13 January 2011, a petition under 37 CFR 1.47(b) must be accompanied by: (1) the requisite petition fee under 37 CFR 1.17(h); (2) factual proof that the inventor refuses to execute the application or cannot be reached after diligent effort; (3) a statement of the last known address of the non-signing inventor; (4) an oath or declaration executed by the 37 CFR 1.47(b) applicant on behalf of and as an agent for the non-signing inventor; (5) proof of proprietary interest in the application; and, (6) a showing that such action is necessary to preserve the rights of the parties or to prevent irreparable damages.

Applicant previously satisfied items 1, 2, 5 and 6.

With the filing of the present renewed petition and accompanying exhibits applicant has satisfied item 3 by providing the last known address of the inventor.

As to item 4, this item remains outstanding.

The declaration filed on 29 September 2010 was signed by Mr. Thomas Muller on behalf of the non-signing inventor. As explained in the decision mailed 27 June 2011, it is not readily apparent from the titles on the declaration that Mr. Muller can execute legal documents on behalf of the corporate assignee. In the present renewed petition applicant has included a signed statement from Karsten Schroder certifying that this individual is authorized to sign legal papers on behalf of the assignee. However, no such statement has been provided signed by Mr. Muller. Alternatively, the statement from Karsten Schroder as managing director does not indicate that Mr. Muller can sign documents on behalf of the assignee.

As such, it is not possible to grant applicant's renewed petition at this time.

CONCLUSION

For the reasons stated above, applicant's renewed petition under 37 CFR 1.47(b) is **DISMISSED**.

Any reconsideration on the merits of this petition must be filed within **TWO (2) MONTHS** from the mail date of this decision. Any reconsideration request should include a cover letter entitled "Renewed Petition Under 37 CFR 1.47(a)." No additional petition fee is required. Extensions of time may be obtained under 37 CFR 1.136(a).

Any further correspondence with respect to this matter should be directed to Mail Stop PCT, Commissioner for Patents, Office of PCT Legal Administration, P.O. Box 1450, Alexandria, Virginia 22313-1450, with the contents of the letter marked to the attention of the Office of PCT Legal Administration or electronically filed utilizing the USPTO's EFS-Web electronic filing system.

Derek A. Putonen
Attorney Advisor
Office of PCT Legal Administration
Tel: 571-272-3294

UNITED STATES PATENT AND TRADEMARK OFFICE

Commissioner for Patents
United States Patent and Trademark Office
P.O. Box 1450
Alexandria, VA 22313-1450
www.uspto.gov

MAILED

DEC 21 2011

PCT LEGAL ADMINISTRATION

HARNESS, DICKEY & PIERCE, P.L.C.
P.O. BOX 828
BLOOMFIELD HILLS MI 48303

In re Application of	:	
HIRTSIEFER	:	DECISION ON PETITION
Serial No.: 12/863,671	:	
PCT No.: PCT/EP2009/000104	:	UNDER 37 CFR 1.47(b)
Int. Filing Date: 12 January 2009	:	
Priority Date: 21 January 2008	:	
Atty Docket No.: 6039PA-000366/US/NP	:	
For: HOLDING ELEMENT FOR ADJUSTING A LID	:	
OF A PIECE OF FURNITURE	:	

This decision is in response to the "RENEWED PETITION UNDER 37 C.F.R. 1.47(a)" filed 10 December 2011 in the United States Patent and Trademark Office (USPTO).

BACKGROUND

On 01 November 2011, applicant was mailed a decision dismissing applicant's petition under 37 CFR 1.47(b). Applicant was afforded two months to file any request for reconsideration.

On 10 December 2011, applicant responded with the present petition.

DISCUSSION

As detailed in the decision mailed 01 November 2011, a petition under 37 CFR 1.47(b) must be accompanied by: (1) the requisite petition fee under 37 CFR 1.17(g); (2) factual proof that the inventor refuses to execute the application or cannot be reached after diligent effort; (3) a statement of the last known address of the non-signing inventor; (4) an oath or declaration executed by the 37 CFR 1.47(b) applicant on behalf of and as an agent for the non-signing inventor; (5) proof of proprietary interest in the application; and, (6) a showing that such action is necessary to preserve the rights of the parties or to prevent irreparable damages. Applicant previously satisfied items (1)-(3), (5) and (6).

With the filing of the present renewed petition and accompanying exhibits applicant has satisfied the remaining item and it is therefore proper to grant applicant's renewed petition at this time.

CONCLUSION

For the reasons stated above, applicant's renewed petition under 37 CFR 1.47(b) is **GRANTED**.

The application has an international filing date of 12 January 2009 under 35 U.S.C. 363, and will be given a date of **10 December 2011** under 35 U.S.C. 371(c)(1), (c)(2) and (c)(4).

As provided in 37 CFR 1.47(c), a notice of the filing of this application will be forwarded to the non-signing inventors at their last known addresses of record. A notice of the filing of the application under 37 CFR 1.47(b) will be published in the Official Gazette.

This application is being returned to the DO/EO/US for processing in accordance with this decision.

Derek A. Putonen
Attorney Advisor
Office of PCT Legal Administration
Tel: (571) 272-3294

UNITED STATES PATENT AND TRADEMARK OFFICE

Commissioner for Patents
United States Patent and Trademark Office
P.O. Box 1450
Alexandria, VA 22313-1450
www.uspto.gov

Mr. Artur Hirtsiefer
Koerbacherstrasse 50
53819 Neunkirchen
GERMANY

MAILED
DEC 21 2011
PCT LEGAL ADMINISTRATION

In re Application of
HIRTSIEFER
Serial No.: 12/863,671
PCT No.: PCT/EP2009/000104
Int. Filing Date: 12 January 2009
Priority Date: 21 January 2008
Atty Docket No.: 6039PA-000366/US/NP
For: HOLDING ELEMENT FOR ADJUSTING A LID OF A PIECE OF FURNITURE

Dear Mr. Hirtsiefer:

You are named as legal representative to an inventor in the above identified United States patent application, filed under the provisions of 37 CFR 1.47(a) and 35 U.S.C. 116. Should a patent be granted, you will be designated as an inventor. As a named inventor, you are entitled to inspect any paper in the file wrapper of the application, order copies of all or any part thereof (at a prepaid cost per 37 CFR 1.19) or to make your position of record in the application. Alternately, you may arrange to do any of the preceding through a registered patent agent or attorney presenting written authorization from you. If you care to join in the application, the law firm of record (see below) would presumably assist you. Joining in the application would entail the filing of the appropriate oath or declaration by you pursuant to 37 CFR 1.63.

Derek A. Putonen
Attorney Advisor
Office of PCT Legal Administration
Tel: (571) 272-3294

Counsel of Record:

HARNESS, DICKEY & PIERCE, P.L.C.
P.O. BOX 828
BLOOMFIELD HILLS MI 48303
UNITED STATES OF AMERICA

UNITED STATES PATENT AND TRADEMARK OFFICE

Commissioner for Patents
United States Patent and Trademark Office
P.O. Box 1450
Alexandria, VA 22313-1450
www.uspto.gov

23373
SUGHRUE MION PLLC
2100 Pennsylvania Avenue, N.W.
Suite 800
Washington, DC 20037

MAILED

DEC 07 2010

PCT LEGAL ADMINISTRATION

In re Application of
TOHMA *et al*
U.S. Application No.: 12/863,675
PCT No.: PCT/JP2009/050726
Int. Filing Date: 20 January 2009
Priority Date: 21 January 2008
Attorney Docket No.: Q119891
For: ALUMINUM MAGNESIUM TITANATE-ALUMINA COMPOSITE CERAMICS

DECISION

This decision is in response to applicants' "Petition Under 37 C.F.R. 1.181" filed 06 October 2010. This petition is treated under 37 CFR 1.182.

BACKGROUND

On 06 August 2010, a Notification of Missing Requirements (Form PCT/DO/EO/905) was mailed requesting an oath or declaration in compliance with 37 CFR 1.497(a) and (b) and $130.00 surcharge fee. Applicants were given two months to respond with extensions of time available under 37 CFR 1.136(a).

On 06 October 2010, applicants filed a petition to change the name of an inventor which was accompanied by, *inter alia*, a $400.00 petition fee; a $130.00 surcharge fee; a statement by the inventor whose name had changed, and an executed declaration.

DISCUSSION

Applicants claim that co-inventor Rina HATEMATA changed her name to Rina YAMANAKA.

Section 605.04(c), *Inventor Changes Name*, of the MPEP lists the procedures required to change the name of an inventor and states, in part:

> The petition must include an appropriate petition fee and an affidavit signed by the inventor setting forth both names and the procedure whereby the change of name was effected, or a certified copy of the court order.

Applicants have provided a statement by the inventor whose name has changed which lists both names and indicating that the change was as a result of a marriage. The $400.00 petition fee has been provided.

This is sufficient for a grantable petition.

CONCLUSION

The petition under 37 CFR 1.182 is **GRANTED**.

The declaration filed 06 October 2010 listing the third-named inventor as Rina YAMANAKA is acceptable as the hand-written changes on the declaration were initialed and dated. This declaration is in compliance with 37 CFR 1.497(a) and (b).

This application is being forwarded to DO/EO/US for further processing.

James Thomson
Attorney Advisor
Office of PCT Legal Administration

Tel.: (571) 272-3302

PATENT
Customer No. 22,852
Attorney Docket No. 05281.0021

IN THE UNITED STATES PATENT AND TRADEMARK OFFICE

In re Application of:	)	
	)	
Bernhard PELZL et al.	)	Group Art Unit: 1782
	)	
Application No.: 12/863,710	)	Examiner: DYE, Rena
	)	
Filed: February 9, 2011	)	Confirmation No.: 8997
	)	
For: STABILIZER COMPOSITION FOR HALOGEN-CONTAINING POLYMERS	)	

Commissioner for Patents
P.O. Box 1450
Alexandria, VA 22313-1450

Sir:

REQUEST FOR PARTICIPATION IN AND TO MAKE U.S. APPLICATION SPECIAL UNDER THE PATENT COOPERATION TREATY - PATENT PROSECUTION HIGHWAY (PCT-PPH) PILOT PROGRAM

Applicant hereby requests participation in the Patent Cooperation Treaty - Patent Patent Prosecution Highway (PCT-PPH) Pilot Program and petitions to make the above-identified application special under the PCT-PPH pilot program.

As required by the "Patent Prosecution Highway Pilot Program between the United States Patent and Trademark Office and the European Patent Office based on Patent Cooperation Treaty Work Products," dated February 23, 2010, by David J. Kappos, Applicant asserts that this U.S. application is a national stage application of the corresponding PCT application, and attaches (1) a Request/Petition Form

PTO/SB/20PCT-EP with a claims correspondence table, and (2) a Preliminary Amendment.

Pursuant to 37 C.F.R. § 1.17(h) as required by 37 C.F.R. § 1.102(d), Applicant submits the $130.00 petition fee. Please charge any additional required fees to Deposit Account No. 06-0916.

Respectfully submitted,

FINNEGAN, HENDERSON, FARABOW,
GARRETT & DUNNER, L.L.P.

Dated: August 25, 2011

By: /David W. Hill/
David W. Hill
Reg. No. 28,220
(202) 408-4000

PTO/SB/20PCT-EP (05-10)
Approved for use through 01/31/2012. OMB 0651-0058
U.S. Patent and Trademark Office; U. S. DEPARTMENT OF COMMERCE
Under the Paperwork Reduction Act of 1995, no persons are required to respond to a collection of information unless it displays a valid OMB control number.

REQUEST FOR PARTICIPATION IN THE PATENT COOPERATION TREATY - PATENT PROSECUTION HIGHWAY (PCT-PPH) PILOT PROGRAM BETWEEN THE EUROPEAN PATENT OFFICE (EPO) AND THE USPTO

Application No:	12/863,710	Filing date:	February 9, 2011
First Named Inventor:	Bernhard Pelzl		
Title of the Invention:	STABILIZER COMPOSITION FOR HALOGEN-CONTAINING POLYMERS		

THIS REQUEST FOR PARTICIPATION IN THE PCT-PPH PILOT PROGRAM ALONG WITH THE REQUIRED DOCUMENTS MUST BE SUBMITTED VIA EFS-WEB. INFORMATION REGARDING EFS-WEB IS AVAILABLE AT HTTP://WWW.USPTO.GOV/EBC/EFS_HELP.HTML

APPLICANT HEREBY REQUESTS PARTICIPATION IN THE PCT-PPH PROGRAM AND PETITIONS TO MAKE THE ABOVE-IDENTIFIED APPLICATION SPECIAL UNDER THE PCT-PPH PROGRAM.

The above-identified application is (1) a national stage entry of the corresponding PCT application, or (2) a national stage entry of another PCT application which claims priority to the corresponding PCT application, or (3) a national application that claims domestic/ foreign priority to the corresponding PCT application, or (4) a national application which forms the basis for the priority claim in the corresponding PCT application, or (5) a continuing application of a U.S. application that satisfies one of (1) to (4) above, or (6) a U.S. application that claims domestic benefit to a U.S. provisional application which forms the basis for the priority claim in the corresponding PCT application.

The corresponding PCT application number(s) is/are: PCT/EP2009/050648

The international filing date of the corresponding PCT application(s) is/are: January 21, 2009

I. List of Required Documents:

a. **A copy of the latest international work product (WO/ISA, WO/IPEA, or IPER) in the above–identified corresponding PCT application(s)**

☐ Is attached

☒ Is not attached because the document is already in the U.S. application.

b. **A copy of all claims which were indicated as having novelty, inventive step and industrial applicability in the above-identified corresponding PCT application(s).**

☐ Is attached.

☒ Is not attached because the document is already in the U.S. application.

c. **English translations of the documents in a. and b. above are attached (if the documents are not in the English language). A statement that the English translation is accurate is attached for the document in b. above.**

This collection of information is required by 35 U.S.C. 119, 37 CFR 1.55, and 37 CFR 1.102(d). The information is required to obtain or retain a benefit by the public, which is to file (and by the USPTO to process) an application. Confidentiality is governed by 35 U.S.C. 122 and 37 CFR 1.11 and 1.14. This collection is estimated to take 2 hours to complete, including gathering, preparing, and submitting the completed application form to the USPTO. Time will vary depending upon the individual case. Any comments on the amount of time you require to complete this form and/or suggestions for reducing this burden should be sent to the Chief Information Officer, U.S. Patent and Trademark Office, U.S. Department of Commerce, P.O. Box 1450, Alexandria, VA 22313-1450. DO NOT SEND FEES OR COMPLETED FORMS TO THIS ADDRESS.

Approved for use through 01/31/2012. OMB 0651-0058
U.S.Patent and Trademark Office; U.S. DEPARTMENT OF COMMERCE

Under the Paperwork Reduction Act of 1995, no persons are required to respond to a collection of information unless it displays a valid OMB control number.

REQUEST FOR PARTICIPATION IN THE PCT-PPH PILOT PROGRAM BETWEEN THE EPO AND THE USPTO

(continued)

Application No.:	12/863,710
First Named Inventor:	Bernhard Pelzl

d. **(1) An information disclosure statement listing the documents cited in the international work products (ISR, WO/ISA, WO/IPEA, IPER) of the corresponding PCT application.**

☐ Is attached

☒ Has already been filed in the above-identified U.S. application on 09/13/2010

(2) Copies of all documents (except) for U.S. patents or U.S. patent application publications)

☐ Are attached.

☒ Have already been filed in the above-identified U.S. application on 09/13/2010

II. Claims Correspondence Table:

Claims in US Application	Patentable Claims in the corresponding PCT Application	Explanation regarding the correspondence
		Please see attached.

III. All the claims in the US application sufficiently correspond to the patentable claims in the corresponding PCT application.

Signature /David W. Hill/	Date August 25, 2011
Name (Print/Typed) David W. Hill	Registration Number 28,220

Claims Correspondence Table:

Claims in US Application	Patentable Claims in PCT Application	Explanation regarding the correspondence
1	1	U.S. claim 1 sufficiently correspond to patentable PCT claim 1.
2	2	U.S. claim 2 sufficiently correspond to patentable PCT claim 2. *
3	3	U.S. claim 3 sufficiently correspond to patentable PCT claim 3. *
4	4	U.S. claim 4 sufficiently correspond to patentable PCT claim 4. *
5	5	U.S. claim 5 sufficiently correspond to patentable PCT claim 5. *
6	6	U.S. claim 6 sufficiently correspond to patentable PCT claim 6. *
7	7	U.S. claim 7 sufficiently correspond to patentable PCT claim 7, except that the U.S. claim is not a multiple dependent claim. *
8	8	U.S. claim 8 sufficiently correspond to patentable PCT claim 8. *
9	9	U.S. claim 9 sufficiently correspond to patentable PCT claim 9, except that the U.S. claim is not a multiple dependent claim. *
10	10	U.S. claim 10 sufficiently correspond to patentable PCT claim 10. *
11	11	U.S. claim 11 sufficiently correspond to patentable PCT claim 11, except that the U.S. claim is not a multiple dependent claim.*
12	12	U.S. claim 12 sufficiently correspond to patentable PCT claim 12, except that the U.S. claim is not a multiple dependent claim.*
13	13	U.S. claim 13 sufficiently correspond to patentable PCT claim 13, except that the U.S. claim is not a multiple dependent claim.*
14	14	U.S. claim 14 sufficiently correspond to patentable PCT claim 14, except that the U.S. claim is not a multiple dependent claim.
15	15	U.S. claim 15 sufficiently correspond to patentable PCT claim 15.
16	16	U.S. claim 16 sufficiently correspond to patentable PCT claim 16, except that the U.S. claim is not a multiple dependent claim.
17	17	U.S. claim 17 sufficiently correspond to patentable PCT claim 17, except that the

		U.S. claim is not a multiple dependent claim.
18	18	U.S. claim 18 sufficiently correspond to patentable PCT claim 18, except that the U.S. claim is not a multiple dependent claim.
19	19	U.S. claim 19 sufficiently correspond to patentable PCT claim 19, except that the U.S. claim is not a multiple dependent claim.

* U.S. claims 2-13 each recite "The stabilizer" in place of "Stabilizer" recited in the corresponding PCT claims, to conform to rules of U.S. patent practice.

UNITED STATES PATENT AND TRADEMARK OFFICE

UNITED STATES DEPARTMENT OF COMMERCE
United States Patent and Trademark Office
Address: COMMISSIONER FOR PATENTS
P.O. Box 1450
Alexandria, Virginia 22313-1450
www.uspto.gov

APPLICATION NO.	FILING DATE	FIRST NAMED INVENTOR	ATTORNEY DOCKET NO.	CONFIRMATION NO.
12/863,710	02/09/2011	Bernhard Pelzl	05281.0021	8997

22852 7590 11/09/2011
FINNEGAN, HENDERSON, FARABOW, GARRETT & DUNNER LLP
901 NEW YORK AVENUE, NW
WASHINGTON, DC 20001-4413

EXAMINER
DYE, SUSAN R

ART UNIT	PAPER NUMBER
1782	

MAIL DATE	DELIVERY MODE
11/09/2011	PAPER

Please find below and/or attached an Office communication concerning this application or proceeding.

The time period for reply, if any, is set in the attached communication.

UNITED STATES PATENT AND TRADEMARK OFFICE

Commissioner for Patents
United States Patent and Trademark Office
P.O. Box 1450
Alexandria, VA 22313-1450
www.uspto.gov

NOV 0 9 2011

CT

In re application of Bernhard Pelzl et al Serial No. 12/863,710 Filed: February 9, 2011 For: STABILIZER COMPOSITION FOR HALOGEN-CONTAINING POLYMERS	: : : : : :	DECISION ON REQUEST TO PARTICIPATE IN PATENT PROSECUTION HIGHWAY PROGRAM AND PETITION TO MAKE SPECIAL UNDER 37 CFR 1.102(a)

This is a decision on the request to participate in the PCT Patent Prosecution Highway (PCT-PPH) pilot program and the petition under 37 CFR 1.102(a), filed August 25, 2011, to make the above-identified application special.

The request and petition are **GRANTED**.

A grantable request to participate in the PCT-PPH pilot program and petition to make special require:

(1) The U.S. application must disclose an eligible relationship to one or more PCT applications where the ISA or IPEA are the JPO, EPO, USPTO or KIPO;

(2) At least one claim in the PCT application has novelty, inventive step, and industrial applicability and must be free of any observations in Box VIII in the latest work product in the international stage or applicant must identify and explain why the claim(s) is/are not subject to the observation in Box VIII;

(3) Applicant must submit a copy of the claim(s) from the PCT application(s) that have novelty, inventive step, and industrial applicability along with an English translation thereof and a statement that the English translation is accurate, if the claims are not in the English language;

(4) Applicant must submit a claims correspondence table in English and all the independent claims in the U.S. application must sufficiently correspond or be amended to sufficiently correspond to the claim(s) that have novelty, inventive step, and industrial applicability in the PCT application(s);

(5) Examination of the U.S. application has not begun;

(6) Applicant must submit a copy of the latest international work product from the PCT application indicating that the claim(s) have novelty, inventive step, and industrial applicability along with an English translation thereof if the latest international work product is not in the English language; and

(7) Applicant must submit an IDS listing the documents cited by the PCT examiner in the international work product along with copies of documents except U.S. patents or U.S. patent application publications.

The request to participate in the PPH program and petition comply with the above requirements. Accordingly, the above-identified application has been accorded "special" status.

The application is being forwarded to the examiner for action on the merits commensurate with this decision.

Any inquiry regarding this decision should be directed to Christine Tierney, Quality Assurance Specialist, at (571) 272-1055.

All other inquiries concerning the examination or status of the application is accessible in the PAIR system at http://www.uspto.gov/ebc/index.html.

/Christine Tierney/

Christine Tierney
Quality Assurance Specialist
Technology Center 1700

MAILED

OCT 15 2010

PCT LEGAL ADMINISTRATION

UNITED STATES PATENT AND TRADEMARK OFFICE

Commissioner for Patents
United States Patent and Trademark Office
P.O. Box 1450
Alexandria, VA 22313-1450
www.uspto.gov

LOUIS J. WILLE
BRISTOL-MYERS SQUIBB COMPANY
PATENT DEPARTMENT
P O BOX 4000
PRINCETON NJ 08543-4000

In re Application of	:	
LIVINGSTON et al.	:	
Application No.: 12/863,713	:	
PCT No.: PCT/US09/31665	:	DECISION ON
Int. Filing Date: 22 January 2009	:	
Priority Date: 23 January 2008	:	under 37 CFR 1.497(d)
Atty Docket No.: 11345USPCT	:	
For: 4-PYRIDINONE COMPOUNDS AND THEIR USE FOR CANCER	:	

This is a decision on applicant's' "Request to Add Inventors in a Non-Provisional under 37 CFR 1.48(c)(1)", filed on 20 July 2010 in the United States Patent and Trademark Office (USPTO), requesting acceptance of the declaration in the above reference application. For the reasons set forth below, the petition is being treated as a petition under 37 CFR 1.497(d).

BACKGROUND

On 20 July 2010, applicant filed a request entry into the national stage in the United States of America under 35 U.S.C. § 371 with, *inter alia*, the requisite basic national fee along with the instant request under 37 CFR 1.48(c)(1).

DISCUSSION

At the outset, it is noted that 37 CFR 1.48(c) is directed to non-provisional applications. *A national stage application is not considered a non-provisional application until the requirements of 35 U.S.C. 371 are complete.* Thus, a petition under 37 CFR 1.48(a) does not apply to the instant application at this time. Such request to correct inventorship is treated as a petition under 37 CFR 1.497(d), to correct an inventive entity if different from the inventive entity identified in the international application.

Applicant now requests the addition of Robert M. Borzilleri and Zhen-Wei Cai as inventors.

Petition under 37 CFR 1.497(d)

Where the oath or declaration filed pursuant to 35 U.S.C. 371(c)(4) and 37 CFR 1.497(d) names an inventive entity different from the inventive entity set forth in the international application, the oath or declaration must be accompanied by: (1) a statement from each person

being added as an inventor that any error in inventorship occurred without deceptive intention on his or her part; (2) the fee set forth in § 1.17(i); and (3) if an assignment has been executed by any of the original named inventors, the written consent of the assignee(s) (See 37 CFR 3.73(b)).

Applicant satisfied Item (2) above with the submission of authorization to charge the petition fee to applicant's deposit account.

However, with respect to Item (1), Petitioner has not provided a statement from inventors Borzilleri and Cai that any error in inventorship occurred without deceptive intention on their part. Item (1) is not satisfied.

With regard to Item (3), it appears that an assignment to Bristol-Myers Squibb Company was filed in this application; however, the Written Consent of the assignee consenting to the addition of Robert M. Borzilleri and Zhen-Wei Cai as inventors in this application to correct the inventorship under 37 CFR 1.497(d)(3) was not provided. Item (3) above is not satisfied.

Accordingly, applicant has not met all of the requirements to add inventors Borzilleri and Cai in the above-identified international application. The petition under 37 CFR 1.497(d) is hereby dismissed.

CONCLUSION

The petition under 37 CFR 1.497(d) to add inventors in the above-captioned application is **DISMISSED WITHOUT PREJUDICE.** Statements from inventors Borzilleri and Cai that any error in inventorship occurred without deceptive intention on their part and the written consent of the assignee to add co-inventors Borzilleri and Cai in the above-identified international application are required.

Any further correspondence with respect to this matter may be filed electronically via EFS-Web selecting the document description "Petition for review and processing by the PCT Legal Office" or by mail addressed to Mail Stop PCT, Commissioner for Patents, Office of PCT Legal Administration, P.O. Box 1450, Alexandria, Virginia 22313-1450, with the contents of the letter marked to the attention of the Office of PCT Legal Administration.

/Cynthia M. Kratz/
Cynthia M. Kratz
Attorney Advisor
PCT Legal Office
Office of PCT Legal Administration
Telephone: (571)272-3286

UNITED STATES PATENT AND TRADEMARK OFFICE

Commissioner for Patents
United States Patent and Trademark Office
P.O. Box 1450
Alexandria, VA 22313-1450
www.uspto.gov

MAILED

MAR 08 2011

PCT LEGAL ADMINISTRATION

LOUIS J. WILLE
BRISTOL-MYERS SQUIBB COMPANY
PATENT DEPARTMENT
P O BOX 4000
PRINCETON NJ 08543-4000

In re Application of
LIVINGSTON et al.
Application No.: 12/863,713
PCT No.: PCT/US09/31665
Int. Filing Date: 22 January 2009
Priority Date: 23 January 2008
Atty Docket No.: 11345USPCT
For: 4-PYRIDINONE COMPOUNDS AND THEIR USE FOR CANCER

DECISION ON

under 37 CFR 1.497(d)

This is a decision on applicant's' "Request to Add Inventors in a Non-Provisional under 37 CFR 1.497", filed on 15 November 2010 in the United States Patent and Trademark Office (USPTO), requesting acceptance of the declaration in the above reference application. The petition is being treated as a petition under 37 CFR 1.497(d).

BACKGROUND

On 20 July 2010, applicant filed a request entry into the national stage in the United States of America under 35 U.S.C. § 371 with, *inter alia*, the requisite basic national fee along with a request under 37 CFR 1.497(d). On 15 October 2010, a decision dismissing the petition was mailed to applicant.

On 09 November 2010, a Notification of Missing Requirements was mailed to applicant indicating that the oath or declaration, in compliance with 37 CFR 1.497(a) and (b) and the surcharge for filing the oath or declaration after the thirty month period was required.

DISCUSSION

Applicant renews his request to add Robert M. Borzilleri and Zhen-Wei Cai as inventors. Applicant's submission of an additional petition fee of $130 will be refunded to applicant's deposit account as it is not required.

Petition under 37 CFR 1.497(d)

Where the oath or declaration filed pursuant to 35 U.S.C. 371(c)(4) and 37 CFR 1.497(d) names an inventive entity different from the inventive entity set forth in the international application, the oath or declaration must be accompanied by: (1) a statement from each person being added as an inventor that any error in inventorship occurred without deceptive intention on his or her part; (2) the fee set forth in § 1.17(i); and (3) if an assignment has been executed by any of the original named inventors, the written consent of the assignee(s) (See 37 CFR 3.73(b)).

With respect to Item (1), Petitioner has now provided a statement from inventors Borzilleri and Cai that any error in inventorship occurred without deceptive intention on their part. Item (1) is satisfied.

Item (2) above was previously satisfied.

With regard to Item (3), it appears that an assignment to Bristol-Myers Squibb Company was filed in this application. A statement under 37 CFR 3.73(b) was provided with this renewed petition; *however, the Written Consent of the assignee consenting to the addition of Robert M. Borzilleri and Zhen-Wei Cai as inventors in this application to correct the inventorship under 37 CFR 1.497(d)(3) was not provided.* Item (3) above is not satisfied.

Accordingly, applicant has not met all of the requirements to add inventors Borzilleri and Cai in the above-identified international application. The petition under 37 CFR 1.497(d) is hereby dismissed.

CONCLUSION

The petition under 37 CFR 1.497(d) to add inventors in the above-captioned application is **DISMISSED WITHOUT PREJUDICE.** The written consent of the assignee to add co-inventors Borzilleri and Cai in the above-identified international application is required.

Any further correspondence with respect to this matter may be filed electronically via EFS-Web selecting the document description "Petition for review and processing by the PCT Legal Office" or by mail addressed to Mail Stop PCT, Commissioner for Patents, Office of PCT Legal Administration, P.O. Box 1450, Alexandria, Virginia 22313-1450, with the contents of the letter marked to the attention of the Office of PCT Legal Administration.

/Cynthia M. Kratz/
Cynthia M. Kratz
Attorney Advisor
PCT Legal Office
Office of PCT Legal Administration
Telephone: (571)272-3286

UNITED STATES PATENT AND TRADEMARK OFFICE

Commissioner for Patents
United States Patent and Trademark Office
P.O. Box 1450
Alexandria, VA 22313-1450
www.uspto.gov

MAILED

AUG 17 2011

PCT LEGAL ADMINISTRATION

LOUIS J. WILLE
BRISTOL-MYERS SQUIBB COMPANY
PATENT DEPARTMENT
P O BOX 4000
PRINCETON NJ 08543-4000

In re Application of
LIVINGSTON et al.
Application No.: 12/863,713
PCT No.: PCT/US09/31665
Int. Filing Date: 22 January 2009
Priority Date: 23 January 2008
Atty Docket No.: 11345USPCT
For: 4-PYRIDINONE COMPOUNDS AND THEIR USE FOR CANCER

DECISION ON

under 37 CFR 1.497(d)

This is a decision on applicant's' "Response to Decision under 37 CFR 1.497(d)", filed on 04 April 2011 in the United States Patent and Trademark Office (USPTO).

BACKGROUND

On 20 July 2010, applicant filed a request entry into the national stage in the United States of America under 35 U.S.C. § 371 with, *inter alia*, the requisite basic national fee along with a request under 37 CFR 1.497(d). On 15 October 2010, a decision dismissing the petition was mailed to applicant.

On 09 November 2010, a Notification of Missing Requirements was mailed to applicant indicating that the oath or declaration, in compliance with 37 CFR 1.497(a) and (b) and the surcharge for filing the oath or declaration after the thirty month period was required. On 15 November 2010, applicant filed a request to add inventors in the above referenced application. A decision dismissing applicant's request under 37 CFR 1.497(d) was mailed on 08 March 2011.

DISCUSSION

Applicant renews his request to add Robert M. Borzilleri and Zhen-Wei Cai as inventors.

Petition under 37 CFR 1.497(d)

Where the oath or declaration filed pursuant to 35 U.S.C. 371(c)(4) and 37 CFR 1.497(d) names an inventive entity different from the inventive entity set forth in the international application, the oath or declaration must be accompanied by: (1) a statement from each person being added as an inventor that any error in inventorship occurred without deceptive intention on his or her part; (2) the fee set forth in § 1.17(i); and (3) if an assignment has been executed by any of the original named inventors, the written consent of the assignee(s) (See 37 CFR 3.73(b)).

Items(1) and (2) above were previously satisfied.

With regard to Item (3), an assignment to Bristol-Myers Squibb Company was filed in this application. A statement under 37 CFR 3.73(b) was provided. The Written Consent of the

assignee consenting to the addition of Robert M. Borzilleri and Zhen-Wei Cai as inventors in this application to correct the inventorship under 37 CFR 1.497(d)(3) was provided with this renewed petition. Item (3) above is satisfied.

Accordingly, applicant has now met all of the requirements to add inventors Borzilleri and Cai in the above-identified international application. The petition under 37 CFR 1.497(d) is hereby granted.

CONCLUSION

The petition under 37 CFR 1.497(d) to add inventors Borzilleri and Cai in the above-captioned application is **GRANTED.**

The application will be forwarded to the United States Designated/Elected Office for further processing.

/Cynthia M. Kratz/
Cynthia M. Kratz
Attorney Advisor
PCT Legal Office
Office of PCT Legal Administration
Telephone: (571)272-3286

UNITED STATES PATENT AND TRADEMARK OFFICE

Commissioner for Patents
United States Patent and Trademark Office
P.O. Box 1450
Alexandria, VA 22313-1450
www.uspto.gov

Sughrue Mion, PLLC
2100 Pennsylvania Avenue, N.W.
Suite 800
Washington, D.C. 20037

MAILED

OCT 21 2010

PCT LEGAL ADMINISTRATION

In re Application of
TOHMA et al.
U.S. Application No.: 12/863,722
PCT No.: PCT/JP2009/050674
Int. Filing Date: 19 January 2009
Priority Date: 21 January 2008
Attorney Docket No.: Q119892
For: PROCESS FOR PRODUCING ALUMINUM MAGNESIUM TITANATE

DECISION ON PETITION

This decision is issued in response to applicants' "Petition under 37 CFR 1.181" filed 06 October 2010 which is being treated as a petition to change an inventor's name under 37 CFR 1.182. Applicants are requesting to change the name of the fourth inventor from Rina Hatemata to Rina Yamanaka due to marriage. The $400 petition fee under 37 CFR 1.17 has been submitted.

DISCUSSION

Section 605.04(b) of the Manual of Patent Examining Procedure states that:

> Except for correction of a typographical or transliteration error in the spelling of an inventor's name, a request to have the name changed from the typewritten version to the signed version or any other corrections in the name of the inventor(s) will not be entertained, unless accompanied by a petition under 35 U.S.C. 1.182 together with an appropriate petition fee.

Applicants are requesting to change the name of the fourth inventor from Rina Hatemata to Rina Yamanaka. Accordingly, the present submission has been treated as a petition under 37 CFR 1.182 to correct the name of the fourth inventor. For such a petition to be grantable, MPEP §605.04(c) states that "the petition must include an appropriate petition fee and an affidavit signed with both names and setting forth the procedure whereby the change of name was effected, or a certified copy of the court order."

Here, applicants' submission included the required fees, satisfying the petition fee requirement. As for the affidavit requirement or copy of the court order, applicants have submitted a "Declaration" (affidavit) regarding the name change. This affidavit states that

the inventor's surname was changed, and that her name was legally changed to Rina Yamanaka as a result of marriage. Therefore, item (2) has been satisfied.

CONCLUSION

The petition under 37 CFR 1.182 to change the inventor's name from Rina Hatemata to Rina Yamanaka is **GRANTED**.

Based on the above, the declaration filed 06 October 2010 is in compliance with 37 CFR 1.497.

This application is being referred to the National Stage Processing Branch of the Office Of PCT Operations for further processing in accordance with this decision.

Anthony Smith
Attorney-Advisor
Office of PCT Legal Administration
Telephone: 571-272-3298
Fax: 571-273-0459

UNITED STATES PATENT AND TRADEMARK OFFICE

Commissioner for Patents
United States Patent and Trademark Office
P.O. Box 1450
Alexandria, VA 22313-1450
www.uspto.gov

MAILED

NOV 03 2011

OFFICE OF PETITIONS

THE NATH LAW GROUP
112 SOUTH WEST STREET
ALEXANDRIA, VA 22314

Applicant: EJNAR TRUELSEN
Appl. No.: 12/863,725
International Filing Date: February 20, 2009
Title: SOLE FOR A SHOE, IN PARTICULAR FOR A RUNNING SHOE
Attorney Docket: 30965U
Pub. No.: US 2010/0293816 A1
Pub. Date: November 25, 2010

This is a decision on the request for a corrected patent application publication under 37 CFR 1.221(b), received on January 12, 2011, for the above-identified application.

The request is granted

The corrected patent application publication will be published in due course, unless the patent issues before the application is republished.

Inquiries relating to this matter may be directed to Sherry D. Brinkley at (571) 272-3204.

/Christopher Bottorff/

Christopher Bottorff
Petitions Examiner
Office of Petitions

UNITED STATES PATENT AND TRADEMARK OFFICE

Commissioner for Patents
United States Patent and Trademark Office
P.O. Box 1450
Alexandria, VA 22313-1450
www.uspto.gov

MAILED

JUL 25 2011

PCT LEGAL ADMINISTRATION

AMGEN INC.
MAIL STOP 28-2-C
ONE AMGEN CENTER DRIVE
THOUSAND OAKS CA 91320-1799

In re Application of	:	
ARVEDSON, et al.	:	DECISION ON PETITION
Application No.: 12/863,737	:	
PCT No.: PCT/US2009/031851	:	UNDER 37 CFR 1.137(b)
Int. Filing Date: 23 January 2009	:	
Priority Date: 25 January 2008	:	
Atty. Docket No.: A-1393-US-PCT	:	
For: FERROPORTIN ANTIBODIES AND METHODS	:	
OF USE	:	

The petition to revive under 37 CFR 1.137(b) filed 06 June 2011 in the above-captioned application is hereby **GRANTED** as follows:

Applicant's statement that "the entire delay in filing the required reply form the due date for the required reply until the filing of a grantable petition under 37 CFR 1.137(b) was unintentional" and the prompt filing of the petition satisfies the requirement of 37 CFR 1.137(b)(3).

A review of the application file reveals that applicant has provided the proper reply in the form of an executed declaration of the inventors. Therefore, the request to revive the application abandoned under 35 U.S.C. 371(d) is granted as to the National stage in the United States of America.

This application is being returned to the United States Designated/Elected Office (DO/EO/US) for treatment in accordance with this decision.

Derek A. Putonen
Attorney Advisor
Office of PCT Legal Administration
Tel: (571) 272-3294

2 0 SEP 2010

United States Patent and Trademark Office

Commissioner for Patents
United States Patent and Trademark Office
P.O. Box 1450
Alexandria, VA 22313-1450
www.uspto.gov

HAHN & VOIGHT PLLC
1012 14TH STREET, NW
SUITE 620
WASHINGTON DC 20005

In re Application of	:	
Lacza et al.	:	
Application No.: 12/863,816	:	DECISION
PCT No.: PCT/HU2009/000004	:	
Int. Filing Date: 16 January 2009	:	ON
Priority Date: 16 January 2008	:	
Attorney Docket No.: DAN-053	:	PETITION
For: Method For Stabilization Of S-Nitrosoglutathione	:	
And Composition Prepared By The Same	:	

The petition to revive under 37 CFR 1.137(b) filed on 21 July 2010 in the above-captioned application is hereby **GRANTED** as follows:

Petitioner states that "the entire delay in filing the required reply from the due date for the required reply until the filing of a grantable petition under 37 C.F.R. 1.137(b) was unintentional." Said statement is being accepted in satisfaction of 37 CFR 1.137(b)(3).

A review of the application file reveals that applicant has paid the petition fee. The required reply has been filed. No terminal disclaimer is required. Therefore, the request to revive the application abandoned under 35 U.S.C. 371(d) is granted as to the national stage in the United States of America.

This application is being returned to the Office of Patent Application Processing for further processing, including the preparation and mailing of a Notification of Missing Requirements (Form PCT/DO/EO/905) requiring the submission of an oath or declaration in compliance with 37 CFR 1.497(a) and (b) and the surcharge under 37 CFR 1.492(h).

/George Dombroske/
George Dombroske
PCT Legal Examiner
Office of PCT Legal Administration
Tel: (571) 272-3283

UNITED STATES PATENT AND TRADEMARK OFFICE

27 SEP 2010

Commissioner for Patents
United States Patent and Trademark Office
P.O. Box 1450
Alexandria, VA 22313-1450
www.uspto.gov

PEARNE & GORDON LLP
1801 EAST 9TH STREET
SUITE 1200
CLEVELAND OH 44114-3108

In re Application of:
TSUMORI, Takahiro, et al.
U.S. Application No.: 12/863,844
PCT Application No.: PCT/JP2009/057002
International Filing Date: 27 March 2009
Priority Date: 31 March 2008
Attorney's Docket No.: MOMI-46762
For: AUTOMATIC DISHWASHING COMPOSITION CONTAINING A SULFONATED COPOLYMER

DECISION ON PETITION
(37 CFR 1.182)

This decision is issued in response to the "Petition And Request Under 37 CFR 1.182 In Response To Notification Of Missing Requirements" filed 30 August 2010 and the "Request For Refund" filed 21 September 2010. Applicants have paid the $400 petition fee applicable to the petition under 37 CFR 1.182.

BACKGROUND

On 27 March 2009, applicants filed international application PCT/JP2009/057002. The international application claimed a priority date of 31 March 2008, and it designated the United States. On 08 October 2009, the International Bureau (IB) communicated a copy of the international application to the United States Patent and Trademark Office (USPTO). The deadline for submission of the basic national fee was thirty months from the priority date, i.e., 30 September 2010.

On 21 July 2010, applicants filed papers to initiate a U.S. national stage application using the EFS-Web electronic filing system. This submission included, among other materials, payment of the basic national fee, an Application Data Sheet (ADS), an express request to begin national examination procedures, and an executed declaration.

The ADS filed by applicants on 21 July 2010 identified the international application number as PCT/**JP**2009/057002, and the declaration was directed to this international application. However, as evidenced by the electronic acknowledgement receipt, the information provided by applicants during the electronic filing process identified the international application number as PCT/**US**09/57002. Based on the information provided during the electronic filing process, the present application was established as the U.S. national stage of PCT/US09/57002.

On 12 August 2010, the United States Designated/Elected Office (DO/EO/US) issued a "Notification Of Missing Requirements" (Form PCT/DO/EO/905) requiring submission of an oath or declaration in compliance with 37 CFR 1.497. The Notification indicated that the previously filed declaration was defective because the inventors listed on the declaration did not correspond with the inventors of record in PCT/US2009/0057002.

On 30 August 2010, applicants filed the "Petition And Request Under 37 CFR 1.182 In Response To Notification Of Missing Requirements" considered herein. The petition seeks to correct the error in the international application number provided during the electronic filing of the present national stage application so that the present application may be treated as the U.S. national stage of PCT/JP2009/057002.

On 21 September 2010, applicants filed the "Request For Refund" considered herein. This submission requests a refund of the $376 in claims fees charged to applicants' Deposit Account by the USPTO because such fees were based on the incorrect international application (PCT/US2009/057002).

DISCUSSION

As set forth in the present petition, the data entered by applicants during the electronic filing incorrectly identified the international application to which the present national stage filing was directed. Correction of this error is required before the materials filed 21 July 2010 can be treated as having been directed to international application PCT/JP2009/057002.

In the present petition, applicants confirm that the identification of international application PCT/US09/57002 during the electronic filing process was the result of a typographical error and that the correct international application herein is PCT/JP2009/057002. Applicants note that the correct international application number was contained in the materials filed 21 July 2010, specifically, on the declaration and the ADS. Finally, applicants' petition included payment of the required $400 petition fee.

The present submission satisfies the requirements for a grantable petition to correct the inadvertent error in the international application number identified during the electronic filing process. Accordingly, the materials filed herein on 21 July 2010 will be treated as having been directed to international application PCT/JP2009/057002. USPTO records will be updated accordingly.

The Notification Of Missing Requirements mailed 12 August 2010, based as it was on a review of international application PCT/US2009/057002, is appropriately vacated.

Similarly, the $356 in additional claims fees charged to Deposit Account No. 16-0820, based as they were on the claims in incorrect international application PCT/US2009/057002, will be refunded to applicants, as requested in the "Request For Refund" filed 21 September 2010.

CONCLUSION

The "Petition And Request Under 37 CFR 1.182 In Response To Notification Of Missing Requirements" filed 30 August 2010 and the "Request For Refund" filed 21 September 2010 are **GRANTED**.

The materials filed herein on 21 July 2010 will be treated as the U.S. national stage of PCT/**JP**2009/057002.

The "Notification Of Missing Requirements" (Form PCT/DO/EO/905) mailed 12 August 2010 is hereby **VACATED**.

Deposit Account No. 16-0820 will be credited with a refund of the $356 in additional claims fees charged on 12 August 2010.

The application is being referred to the National Stage Processing Branch of the Office of PCT Operations for further processing in accordance with this decision, including updating USPTO records to indicate that the present application is the U.S. national stage of PCT/**JP**2009/057002. The date under 35 U.S.C. 371(c)(1), (c)(2), and (c)(4) is 21 July 2010.

Richard M. Ross
Attorney Advisor
Office of PCT Legal Administration
Telephone: (571) 272-3296
Facsimile: (571) 273-0459

UNITED STATES PATENT AND TRADEMARK OFFICE

UNITED STATES DEPARTMENT OF COMMERCE
United States Patent and Trademark Office
Address: COMMISSIONER FOR PATENTS
P.O. Box 1450
Alexandria, Virginia 22313-1450
www.uspto.gov

APPLICATION NO.	FILING DATE	FIRST NAMED INVENTOR	ATTORNEY DOCKET NO.	CONFIRMATION NO.
12/863,854	07/21/2010	Akira Sakai	4578-71	1395

23117 7590 11/26/2010
NIXON & VANDERHYE, PC
901 NORTH GLEBE ROAD, 11TH FLOOR
ARLINGTON, VA 22203

EXAMINER
NELMS, DAVID C

ART UNIT	PAPER NUMBER
2871	

MAIL DATE	DELIVERY MODE
11/26/2010	PAPER

Please find below and/or attached an Office communication concerning this application or proceeding.

The time period for reply, if any, is set in the attached communication.

UNITED STATES PATENT AND TRADEMARK OFFICE

Commissioner for Patents
United States Patent and Trademark Office
P.O. Box 1450
Alexandria, VA 22313-1450
www.uspto.gov

NIXON & VANDERHYE, PC
901 NORTH GLEBE ROAD, 11TH FLOOR
ARLINGTON VA 22203

In re Application of	
SAKAI et al.	**: DECISION ON REQUEST TO**
Application No.: 12/863,854	**: PARTICIPATE IN THE PATENT**
Filed: 21 July 2010	**: PROSECUTION HIGHWAY**
Attorney Docket No.: 4578-71	**: PROGRAM AND PETITION**
For: LIQUID CRYSTAL DISPLAY	**: TO MAKE SPECIAL UNDER**
DEVICE	**: 37 CFR 1.102(a)**

This is a decision on the request to participate in the Patent Prosecution Highway (PPH) program and the petition under 37 CFR 1.102(a), filed 21 July 2010, to make the above-identified application special.

The request and petition are **DISMISSED**.

A grantable request to participate in the PPH program and petition to make special require:

1. The U.S. application must validly claim priority under 35 U.S.C. 119(a) to one or more applications filed in the JPO, note where the JPO application with similar claims is not the same application from which the U.S. application claims priority that the applicant must identify the relationship between the JPO application with similar claims and the JPO priority application;

2. Applicant must submit a copy of:
   a. The allowable/patentable claim(s) from the JPO application(s) or if a copy of the allowable/patentable claims is available via the Dossier Access System (DAS) applicant may request the USPTO obtain a copy from the DAS, however if the USPTO is unable to obtain a copy from the DAS the applicant will be required to submit a copy;
   b. An English translation of the allowable/patentable claim(s) and
   c. A statement that the English translation is accurate;

3. Applicant must
   a. Ensure all the claims in the U.S. application must sufficiently correspond or be amended to sufficiently correspond to the allowable/patentable claim(s) in the JPO application(s) and
   b. Submit a claims correspondence table in English;

4. Examination of the U.S. application has not begun;

5. Applicant must submit:
    a. Documentation of prior office action:
        i. a copy of the office action(s) just prior to the "Decision to Grant a Patent" from each of the JPO application(s) containing the allowable/patentable claim(s) or
        ii. if the allowable/patentable claims(s) are from a "Notification of Reasons for Refusal" then the Notification of Reasons for Refusal or
        iii. if the JPO application is a first action allowance then no office action from the JPO is necessary should be indicated on the request/petition form;

    Further, if a copy of the documents from a or b above is available via the Dossier Access System (DAS) applicant may request the USPTO obtain a copy from the DAS, however if the USPTO is unable to obtain a copy from the DAS the applicant will be required to submit a copy;
    b. An English language translation of the JPO Office action from (5)(a)(i)-(ii) above
    c. A statement that the English translation is accurate;

6. Applicant must submit:
    a. An IDS listing the documents cited by the JPO examiner in the JPO office action (unless already submitted in this application)
    b. Copies of the documents except U.S. patents or U.S. patent application publications (unless already submitted in this application);

Conditions (2-6) above are considered to have been met. However, the request to participate in the PPH pilot program and petition fails meet condition (1).

Regarding the requirement of condition (1), the instant request and petition rely on JP 2010-507117 for the allowable/patentable claims. However, the instant application does not claim priority to this application. In situations where the JPO application that contains the allowable/patentable claims is not the same application for which priority is claimed in the U.S. application, applicant must identify the relationship between the JPO application that contains the allowable/patentable claims and the JPO priority application claimed in the U.S. application.

Applicant is given **ONE** opportunity within a time period of **ONE MONTH or THIRTY DAYS**, whichever is longer, from the mailing date of this decision to correct the deficiencies. **NO EXTENSION OF TIME UNDER 37 CFR 1.136 IS PERMITTED.** If the deficiencies are not corrected with the time period given, the application will await action in its regular turn.

Response must be filed via the Electronic Filing System (EFS) using the document description: Petition to make special under Patent Pros Hwy. Any preliminary amendments and IDS submitted with the PPH documents must be separately indexed as a preliminary amendment and IDS, respectively.

Telephone inquiries concerning this decision should be directed to Lee W. Young at 571-272-4549.

All other inquiries concerning the examination or status of the application is accessible in the PAIR system at http://www.uspto.gov/ebc/index.html.

Lee W. Young.
TQAS Technology Center 2800

UNITED STATES PATENT AND TRADEMARK OFFICE

UNITED STATES DEPARTMENT OF COMMERCE
United States Patent and Trademark Office
Address: COMMISSIONER FOR PATENTS
P.O. Box 1450
Alexandria, Virginia 22313-1450
www.uspto.gov

APPLICATION NO.	FILING DATE	FIRST NAMED INVENTOR	ATTORNEY DOCKET NO.	CONFIRMATION NO.
12/863,854	07/21/2010	Akira Sakai	4578-71	1395

23117 7590 01/19/2011
NIXON & VANDERHYE, PC
901 NORTH GLEBE ROAD, 11TH FLOOR
ARLINGTON, VA 22203

EXAMINER
NELMS, DAVID C

ART UNIT	PAPER NUMBER
2871	

MAIL DATE	DELIVERY MODE
01/19/2011	PAPER

Please find below and/or attached an Office communication concerning this application or proceeding.

The time period for reply, if any, is set in the attached communication.

UNITED STATES PATENT AND TRADEMARK OFFICE

Commissioner for Patents
United States Patent and Trademark Office
P.O. Box 1450
Alexandria, VA 22313-1450
www.uspto.gov

NIXON & VANDERHYE, PC
901 NORTH GLEBE ROAD, 11TH FLOOR
ARLINGTON VA 22203

In re Application of	
SAKAI et al.	**: DECISION ON REQUEST TO**
Application No.: 12/863,854	**: PARTICIPATE IN THE PATENT**
Filed: 21 July 2010	**: PROSECUTION HIGHWAY**
Attorney Docket No.: 4578-71	**: PROGRAM AND PETITION**
For: LIQUID CRYSTAL DISPLAY	**: TO MAKE SPECIAL UNDER**
DEVICE	**: 37 CFR 1.102(a)**

This is a decision on the request to participate in the Patent Prosecution Highway (PPH) program and the petition under 37 CFR 1.102(a), filed 21 July 2010 and renewed on 15 December 2010, to make the above-identified application special.

The request and petition are **GRANTED**.

Discussion

A grantable request to participate in the PPH pilot program and petition to make special require:

1. The U.S. application is
    a. a Paris Convention application which either
        i. validly claims priority under 35 U.S.C. 119(a) and 37 CFR 1.55 to one or more applications filed in the JPO, or
        ii. validly claims priority to a PCT application that contains no priority claims, or
    b. a national stage application under the PCT (an application which entered the national stage in the U.S. from a PCT international application after compliance with 35 U.S.C. 371), which PCT application
        i. validly claims priority to an application filed in the JPO, or
        ii. validly claims priority to a PCT application that contains no priority claims, or
        iii. contains no priority claim, or
    c. a so-called bypass application filed under 35 U.S.C. 111(a) which validly claims benefit under 35 U.S.C. 120 to a PCT application, which PCT application
        i. validly claims priority to an application filed in the JPO, or
        ii. validly claims priority to a PCT application that contains no priority claims, or
        iii. contains no priority claim;

2. Applicant must submit a copy of:
    a. The allowable/patentable claim(s) from the JPO application(s);
    b. An English translation of the allowable/patentable claim(s) and
    c. A statement that the English translation is accurate;
3. Applicant must:
    a. Ensure all the claims in the U.S. application must sufficiently correspond or be amended to sufficiently correspond to the allowable/patentable claim(s) in the JPO application(s) and
    b. Submit a claims correspondence table in English;
4. Examination of the U.S. application has <u>not</u> begun;
5. Applicant must submit:
    a. Documentation of prior office action:
        i. a copy of the office action(s) just prior to the "Decision to Grant a Patent" from each of the JPO application(s) containing the allowable/patentable claim(s) or
        ii. if the allowable/patentable claims(s) are from a "Notification of Reasons for Refusal" then the Notification of Reasons for Refusal or
        iii. if the JPO application is a first action allowance then no office action from the JPO is necessary should be indicated on the request/petition form;
    b. An English language translation of the JPO Office action from (5)(a)(i)-(ii) above
    c. A statement that the English translation is accurate;
6. Applicant must submit:
    a. An IDS listing the documents cited by the JPO examiner in the JPO office action (unless already submitted in this application)
    b. Copies of the documents except U.S. patents or U.S. patent application publications (unless already submitted in this application);

The request to participate in the PPH pilot program and petition comply with the above requirements. Accordingly, the above-identified application has been accorded "special" status.

Inquiries concerning this decision should be directed to Lee W. Young at 571-272-4549.

All other inquiries concerning the examination or status of the application is accessible in the PAIR system at http://www.uspto.gov/ebc.index.html.

This application will be forwarded to the examiner for action on the merits commensurate with this decision once this application's formality reviews have been completed.

Lee W. Young
TQAS, Technology Center 2800 – Semiconductors
Electrical & Optical Systems & Components

UNITED STATES PATENT AND TRADEMARK OFFICE

Commissioner for Patents
United States Patent and Trademark Office
P.O. Box 1450
Alexandria, VA 22313-1450
www.uspto.gov

FEB 2 4 2011

ExxonMobil Upstream Research Company
PO Box 2189
CORP-URC-SW359
Houston, TX 77252-2189

In re Application of
Shiyu Xu et al
Application No. 12/863,867
Filed: July 21, 2010
For: ROCK PHYSICS FOR SIMULATING SEISMIC RESPONSE IN LAYERED FRACTURED ROCKS

PETITION TO ACCEPT COLOR DRAWINGS/PHOTOGRAPHS

This is a decision on applicant's petition under 37 CFR 1.184(A)(2) Filed January 28, 2011 to accept color drawings/photographs.

For the acceptance of color drawings in accordance with 37 CFR 1.184(A)(2), a petition is required which fulfills the following requirements:

(i) The appropriate fee set forth in 1.17(h);
(ii) three (3) sets of color drawings/photographs; and
(iii) amending the specification to contain the following language as the first paragraph in that portion of the specification relating to the brief description of the drawings: "The file of this patent contains at least one drawing executed in color photography. Copies of this patent with color photographs will be provided by the Patent and Trademark Office upon request and payment of necessary fee."

Having met the requirements of 37 CFR 1.184(A)(2), the petition is GRANTED.

Any questions or comments with respect to the decision should be forwarded to Supervisory Patent Examiner, Jack Keith at the number listed below.

Jack Keith
Supervisory Patent Examiner
Art Unit 3663
(571) 272-6878

jwk: 2/24/11

MAILED

OCT 14 2010

PCT LEGAL ADMINISTRATION

UNITED STATES PATENT and TRADEMARK OFFICE

COMMISSIONER FOR PATENTS
UNITED STATES PATENT AND TRADEMARK OFFICE
P.O BOX 1450
ALEXANDRIA, VA 22313-1450
www.uspto.gov

BRINKS HOFER GILSON & LIONE
P.O. BOX 10395
CHICAGO IL 60610

In re Application of	:	
MARONA et al	:	DECISION ON
Application No.: 12/863,881	:	
PCT No.: PCT/PL2009/000004	:	
Int. Filing Date: 19 January 2009	:	PETITION UNDER
Priority Date: 22 January 2008	:	
Attorney Docket No.: 14331-3	:	
For: DERIVATIVES OF AMINOALKANOLS...	:	37 CFR 1.181
... THEIR USE		

This is in response to applicants' submission "STATEMENT UNDER 37 CFR 1.497(d)" filed on 21 July 2010, which is being treated as a petition under 37 CR 1.181. This submission states that the correct spelling of the joint inventors are as follows: Henrky Marona, Anna Waszkielewicz, and Katarzyna Kiec-Kononowicz and their addresses as listed in declaration filed. As this petition does not require a petition fee, the petition fee of $130.00 will be refunded to petitioner's Deposit Account No.: 23-1925.

BACKGROUND

On 20 March 2009, applicants filed in the United States Patent and Trademark Office (PTO) a Transmittal Letter (Form PTO-1390) accompanied by, *inter alia*, the basic national fee, and a declaration; however, it is missing the signature of Kiec-Konowicz.

Applicants also filed a petition stating the correct spellings of the joint inventors are as follows: Henrky Marona, Anna Waszkielewicz, and Katarzyna Kiec-Kononowicz. This petition corrects any incorrect spellings both to the names of the joint inventors and addresses listed in the International Application.

DISCUSSION

The correct spellings of the joint inventors are as listed Henrky Marona, Anna Waszkielewicz, and Katarzyna Kiec-Kononowicz and their addresses as indicated in the declaration submitted, and not as listed in the International Application. The names and addresses may have been spelled incorrectly as the international phase.. As such the correct spellings and addresses will be reflected in the US national stage processing.

CONCLUSION

The petition under 37 CFR 1.181 is **GRANTED.**

This application is being returned to the United States Designated/Elected Office (DO/EO/US) for continued processing.

Rafael Bacares
PCT Legal Examiner
PCT Legal Office
Telephone: (571) 272-3276
Facsimile: (571) 273-0459

UNITED STATES PATENT AND TRADEMARK OFFICE

Commissioner for Patents
United States Patent and Trademark Office
P.O. Box 1450
Alexandria, VA 22313-1450
www.uspto.gov

MAILED

JAN 21 2011

PCT LEGAL ADMINISTRATION

OBLON, SPIVAK, MCCLELLAND MAIER & NEUSTADT, L.L.P.
1940 DUKE STREET
ALEXANDRIA VA 22314

In re Application of	:
KERGOSIEN et al.	:
Application No.: 12/863,893	: DECISION ON RESPONSE
PCT No.: PCT/US09/32624	:
Int. Filing: 30 January 2009	:
Priority Date: 30 January 2008	:
Attorney Docket No.: 361753USPCT	:
For: ADHESIVE ARTICLE CONTAINING	:
COLORANT AND/OR ACTIVE AGENT	:

This application is before the PCT Legal Office for consideration of applicant's request to correct the inventor's name filed on 09 November 2010 in the United States Patent and Trademark Office (USPTO) in the above-captioned application.

On 21 July 2010, applicant filed a request for U.S. national stage entry for PCT/US09/32624 along with the basic national fee. On 09 November 2010, applicant filed a request to correct inventor's name Guillame Kergosien, which was inadvertently misspelled as a result of a typographical or transliteration error. The first inventor's name **Guillaume** Kergosien is accepted and noted for the record. No petition fee is required.

Thus, the declaration, submitted on 09 November 2010, is acceptable and in compliance with 37 CFR 1.497(a) and (b).

The application will be forwarded to the United States Designated/Elected Office for further processing. The 35 U.S.C. 371(c)(1), (c)(2) and (c)(4) date is 09 November 2010.

/Cynthia M. Kratz/
Cynthia M. Kratz
Attorney Advisor
PCT Legal Office
Telephone: (571) 272-3286
Facsimile: (571) 272-0459

UNITED STATES PATENT AND TRADEMARK OFFICE

Commissioner for Patents
United States Patent and Trademark Office
P.O. Box 1450
Alexandria, VA 22313-1450
www.uspto.gov

MAILED

MAR 28 2011

PCT LEGAL ADMINISTRATION

MERCHANT & GOULD PC
P.O. BOX 2903
MINNEAPOLIS MN 55402-0903

In re Application of MUTOU (Deceased) Application No.: 12/863,913 PCT No.: PCT/JP09/50893 Int. Filing Date: 21 January 2009 Priority Date: 21 January 2008 Attorney Docket no.: 13425.0107FPWO For: CORRUGATED-FIN TYPE RADIATOR	DECISION ON REQUEST UNDER 37 CFR 1.42

This is a decision on applicant's response to the Notification of Missing Requirements and Request under 37 CFR 1.42 along with an executed declaration filed in the United States Patent and Trademark Office (USPTO) on 20 December 2010.

BACKGROUND

On 21 July 2010, applicant filed a request for entry into the national stage in the United States of America under 35 U.S.C. § 371 with, *inter alia*, the requisite basic national fee.

On 20 October 2010, a Notification of Missing Requirements was mailed applicant indicating that an oath or declaration, in compliance with 37 CFR 1.497(a) and (b) along with the surcharge for filing the oath or declaration after the thirty month period, were required.

DISCUSSION

To meet the requirements for compliance with 37 CFR 1.497(a) and (b), the declaration must state the relationship and the country of citizenship for all inventors, including the deceased inventor and his legal representative. In addition, the declaration must provide the residency and mailing address for all inventors, including the deceased inventor and the legal representative.

The declaration submitted on 20 December 2010 identifies Junko Mutou as the executor (legal representative) of the deceased inventor Fumio Mutou and states the relationship, country of citizenship, residency and mailing address for the legal representative. The declaration is executed by the joint inventors. The declaration meets the requirements for compliance with 37 CFR 1.497(a) and (b). Accordingly, it is appropriate, at this time, to accord the application status under 37 CFR 1.42.

CONCLUSION

For the above reasons, the request for status under 37 CFR 1.42 is **GRANTED**.

The declaration by the legal representative for deceased inventor submitted on 20 December 2010 is accepted as a proper declaration under 37 CFR 1.497(a) and (b).

The application will be forwarded to the United States Designated/Elected Office for

further processing. The 35 U.S.C. 371(c)(1), (c)(2) and (c)(4) date is 20 December 2010.

/Cynthia M. Kratz/
Cynthia M. Kratz
Attorney Advisor
PCT Legal Office
Office of PCT Legal Administration

Telephone: (571) 272-3286
Facsimile: (571) 273-0459

20 SEP 2010

UNITED STATES PATENT AND TRADEMARK OFFICE

Commissioner for Patents
United States Patent and Trademark Office
P.O. Box 1450
Alexandria, VA 22313-1450
www.uspto.gov

FAY SHARPE LLP
1228 Euclid Avenue, 5th Floor
The Halle Building
Cleveland OH 44115

In re Application of	:	
GLENN, Brian, et al.	:	
Application No.: 12/863,920	:	
PCT No.: PCT/IB2009/000052	:	
Int. Filing Date: 14 January 2009	:	DECISION
Priority Date: 14 January 2008	:	
Att. Docket No.: CLPP200059US01	:	
For: A MODULAR ROTOR ... MODULAR	:	
ROTOR BLADES	:	

Applicant's petition under 37 CFR 1.137(b), filed in the United States Patent and Trademark Office on 21 July 2010, is **GRANTED**.

Applicant states that the entire delay in filing the required reply from the due date for the required reply until the filing of a grantable petition under 37 CFR 1.137(b) was unintentional, as required by 37 CFR 1.137(b)(3). The appropriate national fee and petition fee have been submitted. A terminal disclaimer is not required as the application was filed on or after 08 June 1995. Accordingly, all requirements under 37 CFR 1.137(b) have been satisfied.

This application is being referred to the National Stage Processing Branch of the Office of Patent Application Processing for continued processing in accordance with this decision.

/Erin P. Thomson/

Erin P. Thomson
Attorney Advisor
PCT Legal Administration

Telephone: 571-272-3292

UNITED STATES PATENT and TRADEMARK OFFICE

21 SEP 2010

COMMISSIONER FOR PATENTS
UNITED STATES PATENT AND TRADEMARK OFFICE
P.O BOX 1450
ALEXANDRIA, VA 22313-1450
www.uspto.gov

HAMRE, SCHUMANN, MUELLER & LARSON, P.C.
P.O. BOX 2902
MINNEAPOLIS MN 55402-0902

In re Application of	DECISION ON
Xue et al	
Application No.: 12/863,951	
PCT No.: PCT/CN2008/01553	
Filing Date: 29 August 2008	PETITION UNDER
Priority Date: 31 August 2007	
Attorney's Docket No.: 20019.0006USWO	
For: A CAM SELF-ADAPTIVE AUTOMATIC SPEED SHIFT HUB	37 CFR 1.137(b)

This decision is in response to applicants' "Petition For Revival Of An International Application For Patent Designating The U.S. Abandoned Unintentionally Under 37 CFR 1.137(b)," filed 21 July 2010.

BACKGROUND

On 29 August 2008, this international application was filed, claiming an earliest priority date of 31 August 2007.

The deadline for paying the basic national fee in the United States under 35 U.S.C. 371 and 37 CFR 1.495 was 3 March 2010. This international application became abandoned with respect to the United States at midnight on 3 March 2010 for failure to pay the required basic national fee.

On 21 July 2010, applicant filed in the United States Patent and Trademark Office (PTO) a transmittal letter for entry into the national stage in the U.S. under 35 U.S.C. 371, which was accompanied by, *inter alia*, the national basic fee, p etition fee, and a petition under 37 CFR 1.137(b).

DISCUSSION

A grantable petition to revive an abandoned application under 37 CFR 1.137(b) must be accompanied by (1) the required reply, unless previously filed. In a nonprovisional application abandoned for failure to prosecute, the required reply may be met by the filing of a continuing application; (2) the petition fee as set forth in § 1.17(m); and (3) a statement that the entire delay in filing the required reply from the due date for the reply until the filing of a grantable petition pursuant to this paragraph was unintentional. The Commissioner may require additional information where there is a question whether the delay was unintentional; and (4) any terminal disclaimer (and fee as set forth in § 1.20 (d)) required pursuant to paragraph (c) of this section.

Petitioner has provided: (1) the proper reply by submitting the basic national filing fee, (2) the petition fee set forth in §1.17(m) and (3) the proper statement under 137(b)(3). In this application, no terminal disclaimer is required.

Accordingly, the petition is deemed to satisfy requirements (1), (2), (3), and (4) under 37 CFR 1.137(b).

DECISION

The petition under 37 CFR 1.137(b) is **GRANTED**.

This application is being returned to the United States Designated/Elected Office (DO/EO/US) for continued processing.

Rafael Bacares
PCT Legal Examiner
PCT Legal Office
Telephone: (571) 272-3276
Facsimile: (571) 273-0459

PTO/SB/20PCT-KR (06-10)
Approved for use through 01/31/2012. OMB 0651-0058
U.S. Patent and Trademark Office; U. S. DEPARTMENT OF COMMERCE
Under the Paperwork Reduction Act of 1995, no persons are required to respond to a collection of information unless it displays a valid OMB control number.

REQUEST FOR PARTICIPATION IN THE PATENT COOPERATION TREATY - PATENT PROSECUTION HIGHWAY (PCT-PPH) PILOT PROGRAM BETWEEN THE KOREAN INTELLECTUAL PROPERTY OFFICE (KIPO) AND THE USPTO

Application No:	12/863,972	Filing date:	July 21, 2010
First Named Inventor:	Sung-Jun Park		
Title of the Invention:	METHOD OF DOWNLINK HARQ OPERATION AT AN EXPIRY OF TIME ALIGNMENT TIMER		

THIS REQUEST FOR PARTICIPATION IN THE PCT-PPH PILOT PROGRAM ALONG WITH THE REQUIRED DOCUMENTS MUST BE SUBMITTED VIA EFS-WEB. INFORMATION REGARDING EFS-WEB IS AVAILABLE AT HTTP://WWW.USPTO.GOV/EBC/EFS_HELP.HTML

APPLICANT HEREBY REQUESTS PARTICIPATION IN THE PCT-PPH PROGRAM AND PETITIONS TO MAKE THE ABOVE-IDENTIFIED APPLICATION SPECIAL UNDER THE PCT-PPH PROGRAM.

The above-identified application is (1) a national stage entry of the corresponding PCT application, or (2) a national stage entry of another PCT application which claims priority to the corresponding PCT application, or (3) a national application that claims domestic/ foreign priority to the corresponding PCT application, or (4) a national application which forms the basis for the priority claim in the corresponding PCT application, or (5) a continuing application of a U.S. application that satisfies one of (1) to (4) above, or (6) a U.S. application that claims domestic benefit to a U.S. provisional application which forms the basis for the priority claim in the corresponding PCT application.

The corresponding PCT application number(s) is/are: PCT/KR2009/000496

The international filing date of the corresponding PCT application(s) is/are: February 2, 2009

I. List of Required Documents:

a. **A copy of the latest international work product (WO/ISA, WO/IPEA, or IPER) in the above–identified corresponding PCT application(s)**

- [x] Is attached.
- [ ] Is not attached because the document is already in the U.S. application.

b. **A copy of all claims which were indicated as having novelty, inventive step and industrial applicability in the above-identified corresponding PCT application(s).**

- [ ] Is attached.
- [x] Is not attached because the document is already in the U.S. application.

c. **English translations of the documents in a. and b. above are attached (if the documents are not in the English language). A statement that the English translation is accurate is attached for the document in b. above.**

This collection of information is required by 35 U.S.C. 119, 37 CFR 1.55, and 37 CFR 1.102(d). The information is required to obtain or retain a benefit by the public, which is to file (and by the USPTO to process) an application. Confidentiality is governed by 35 U.S.C. 122 and 37 CFR 1.11 and 1.14. This collection is estimated to take 2 hours to complete, including gathering, preparing, and submitting the completed application form to the USPTO. Time will vary depending upon the individual case. Any comments on the amount of time you require to complete this form and/or suggestions for reducing this burden should be sent to the Chief Information Officer, U.S. Patent and Trademark Office, U.S. Department of Commerce, P.O. Box 1450, Alexandria, VA 22313-1450. DO NOT SEND FEES OR COMPLETED FORMS TO THIS ADDRESS.

Approved for use through 01/31/2012. OMB 0651-0058
U.S.Patent and Trademark Office; U.S. DEPARTMENT OF COMMERCE
Under the Paperwork Reduction Act of 1995, no persons are required to respond to a collection of information unless it displays a valid OMB control number.

REQUEST FOR PARTICIPATION IN THE PCT-PPH PILOT PROGRAM BETWEEN THE KIPO AND THE USPTO

(continued)

Application No.:	12/863,972
First Named Inventor:	Sung-Jun Park

d. **(1) An information disclosure statement listing the documents cited in the international work products (ISR, WO/ISA, WO/IPEA, IPER) of the corresponding PCT application.**

☐ Is attached

☑ Has already been filed in the above-identified U.S. application on 6/29/11, 6/8/11, 12/14/10, 10/12/10

(2) Copies of all documents (except) for U.S. patents or U.S. patent application publications)

☐ Are attached.

☑ Have already been filed in the above-identified U.S. application on 6/29/11, 6/8/11, 12/14/10, 10/12/10

II. Claims Correspondence Table:

Claims in US Application	Patentable Claims in the corresponding PCT Application	Explanation regarding the correspondence
1-14	1-14	Sufficiently corresponds

III. All the claims in the US application sufficiently correspond to the patentable claims in the corresponding PCT application.

Signature /Harry S. Lee/	Date July 5, 2011
Name (Print/Typed) Harry S. Lee	Registration Number 56,814

Privacy Act Statement

The **Privacy Act of 1974 (P.L. 93-579)** requires that you be given certain information in connection with your submission of the attached form related to a patent application or patent. Accordingly, pursuant to the requirements of the Act, please be advised that: (1) the general authority for the collection of this information is 35 U.S.C. 2(b)(2); (2) furnishing of the information solicited is voluntary; and (3) the principal purpose for which the information is used by the U.S. Patent and Trademark Office is to process and/or examine your submission related to a patent application or patent. If you do not furnish the requested information, the U.S. Patent and Trademark Office may not be able to process and/or examine your submission, which may result in termination of proceedings or abandonment of the application or expiration of the patent.

The information provided by you in this form will be subject to the following routine uses:

1. The information on this form will be treated confidentially to the extent allowed under the Freedom of Information Act (5 U.S.C. 552) and the Privacy Act (5 U.S.C 552a). Records from this system of records may be disclosed to the Department of Justice to determine whether disclosure of these records is required by the Freedom of Information Act.
2. A record from this system of records may be disclosed, as a routine use, in the course of presenting evidence to a court, magistrate, or administrative tribunal, including disclosures to opposing counsel in the course of settlement negotiations.
3. A record in this system of records may be disclosed, as a routine use, to a Member of Congress submitting a request involving an individual, to whom the record pertains, when the individual has requested assistance from the Member with respect to the subject matter of the record.
4. A record in this system of records may be disclosed, as a routine use, to a contractor of the Agency having need for the information in order to perform a contract. Recipients of information shall be required to comply with the requirements of the Privacy Act of 1974, as amended, pursuant to 5 U.S.C. 552a(m).
5. A record related to an International Application filed under the Patent Cooperation Treaty in this system of records may be disclosed, as a routine use, to the International Bureau of the World Intellectual Property Organization, pursuant to the Patent Cooperation Treaty.
6. A record in this system of records may be disclosed, as a routine use, to another federal agency for purposes of National Security review (35 U.S.C. 181) and for review pursuant to the Atomic Energy Act (42 U.S.C. 218(c)).
7. A record from this system of records may be disclosed, as a routine use, to the Administrator, General Services, or his/her designee, during an inspection of records conducted by GSA as part of that agency's responsibility to recommend improvements in records management practices and programs, under authority of 44 U.S.C. 2904 and 2906. Such disclosure shall be made in accordance with the GSA regulations governing inspection of records for this purpose, and any other relevant (*i.e.*, GSA or Commerce) directive. Such disclosure shall not be used to make determinations about individuals.
8. A record from this system of records may be disclosed, as a routine use, to the public after either publication of the application pursuant to 35 U.S.C. 122(b) or issuance of a patent pursuant to 35 U.S.C. 151. Further, a record may be disclosed, subject to the limitations of 37 CFR 1.14, as a routine use, to the public if the record was filed in an application which became abandoned or in which the proceedings were terminated and which application is referenced by either a published application, an application open to public inspection or an issued patent.
9. A record from this system of records may be disclosed, as a routine use, to a Federal, State, or local law enforcement agency, if the USPTO becomes aware of a violation or potential violation of law or regulation.

UNITED STATES PATENT AND TRADEMARK OFFICE

UNITED STATES DEPARTMENT OF COMMERCE
United States Patent and Trademark Office
Address: COMMISSIONER FOR PATENTS
P.O. Box 1450
Alexandria, Virginia 22313-1450
www.uspto.gov

APPLICATION NO.	FILING DATE	FIRST NAMED INVENTOR	ATTORNEY DOCKET NO.	CONFIRMATION NO.
12/863,972	07/21/2010	Sung-Jun Park	2101-3842	1249

35884 7590 08/08/2011
LEE, HONG, DEGERMAN, KANG & WAIMEY
660 S. FIGUEROA STREET
Suite 2300
LOS ANGELES, CA 90017

EXAMINER
YAO, KWANG BIN

ART UNIT	PAPER NUMBER
2473	

NOTIFICATION DATE	DELIVERY MODE
08/08/2011	ELECTRONIC

Please find below and/or attached an Office communication concerning this application or proceeding.

The time period for reply, if any, is set in the attached communication.

Notice of the Office communication was sent electronically on above-indicated "Notification Date" to the following e-mail address(es):

uspto@lhlaw.com
ip.lhlaw@gmail.com
ip.lhlaw@live.com

UNITED STATES PATENT AND TRADEMARK OFFICE

Commissioner for Patents
United States Patent and Trademark Office
P.O. Box 1450
Alexandria, VA 22313-1450
www.uspto.gov

LEE, HONG, DEGERMAN, KANG & WAIMEY
660 S. FIGUEROA STREET
SUITE 2300
LOS ANGELES, CA 90017

In re Application of: PARK, et al.
Application No. 12/863972
Filed: July 21, 2010
For: METHOD OF DOWNLINK HARQ OPERATION AT AN EXPIRY OF TIME ALIGNMENT TIMER

DECISION ON REQUEST TO PARTICIPATE IN PCT-PATENT PROSECUTION HIGHWAY PROGRAM AND PETITION TO MAKE SPECIAL UNDER 37 CFR 1.102(a)

This is a decision on the request to participate in the PCT- Patent Prosecution Highway (PPH) pilot program and the petition under 37 CFR 1.102(a), filed July 5, 2011, to make the above-identified application special.

The petition is **GRANTED.**

A grantable request to participate in the PCT PPH program and petition to make special require:

(1) The relationship between the corresponding U.S. application for which participation in the PCT-PPH pilot program is requested and the PCT application satisfies one of the following:

(a) The U.S. application is a national stage entry of the corresponding PCT application.

(b)The U.S. application is a national application which forms the basis for the priority claim in the corresponding PCT application.

(c) The U.S. application is a national stage entry of another PCT application (which can be filed in any competent receiving office) which claims priority to the corresponding PCT application.

(d) The U.S. application is a national application claiming foreign/domestic priority to the corresponding PCT application.

(e) The U.S. application is a continuing application (continuation, divisional, or continuation-in-part) of the U.S. application which satisfies one of the above (a) to (d) scenarios.

(2) The latest work product in the international phase of the PCT application corresponding to the U.S. application indicates at least one claim in the PCT application has novelty, inventive step and industrial applicability. In case any observation is described in Box VIII of the WO/ISA, or WO/IPEA, or IPER which forms the basis for the PCT-PPH request, applicant must identify and explain why the claim(s) is/are not subject to any observation described in Box VIII irrespective of whether an amendment is submitted to correct the observation described in Box VIII.

(3) All the claims in each U.S. application for which a request for participation in the PCT-PPH pilot program is made must sufficiently correspond to one or more of those claims indicated as having novelty, inventive step and industrial applicability and free of any observation described in Box VIII in the latest work product of the corresponding PCT application.

(4) Substantive examination of the U.S. application for which participation in the PCT-PPH pilot program is requested has not begun.

(5) Applicant must submit a copy of the latest international work product which indicated that the claim(s) has/have novelty, inventive step and industrial applicability along with an English translation thereof if the copy of the latest international work product is not in the English language.

(6) Applicant must submit a copy of the claims from the corresponding PCT application which were indicated as having novelty, inventive step and industrial applicability in the latest work product of the PCT application along with an English translation thereof and a statement that the English translation is accurate if the claims are not in the English language. Applicant is required to submit a claims correspondence table in English. The claims correspondence table must indicate how all the claims in the U.S. application sufficiently correspond to the claims indicated as having novelty, inventive step and industrial applicability in the latest international work product. *If the claims in the U.S. application for which participation in the PCT-PPH pilot program is requested are identical to the claims from the corresponding PCT application, and are in the English language, applicant may just indicate such in the PCT-PPH request and it will not be necessary for applicant to submit a copy of the claims from the corresponding PCT application.*

(7) Applicant must submit an information disclosure statement (IDS) listing the documents cited in the international work products (ISR, WOIISA, WOIIPEA, PER) of the PCT.

(8) The request for participation in the PCT-PPH pilot program and all the supporting documents must be submitted to the USPTO via EFS-Web and indexed with the following document description: "Petition to make special under PCT-Patent Pros Hwy. Any preliminary amendments and IDS submitted with the PCT-PPH documents must be separately indexed as a preliminary amendment and IDS, respectively.

The request to participate in the PCT-PPH program and petition comply with all the above requirements. Accordingly, the above-identified application has been accorded "special" status.

Telephone inquiries concerning this decision should be directed to Kim Huynh at 571-272-4147

All other inquiries concerning the examination or status of the application is accessible in the PAIR system at http://www.uspto.gov/ebc/index.html.

/Kim Huynh/

Kim Huynh
Quality Assurance Specialist
Technology Center 2400

Approved for use through 01/31/2012. OMB 0651-0058
U.S.Patent and Trademark Office; U.S. DEPARTMENT OF COMMERCE
Under the Paperwork Reduction Act of 1995, no persons are required to respond to a collection of information unless it displays a valid OMB control number.

REQUEST FOR PARTICIPATION IN THE PCT-PPH PILOT PROGRAM BETWEEN THE KIPO AND THE USPTO

(continued)

Application No.:	12/863,972
First Named Inventor:	Sung-Jun Park

d. **(1) An information disclosure statement listing the documents cited in the international work products (ISR, WO/ISA, WO/IPEA, IPER) of the corresponding PCT application.**

☐ Is attached

☑ Has already been filed in the above-identified U.S. application on 6/29/11, 6/8/11, 12/14/10, 10/12/10

(2) Copies of all documents (except) for U.S. patents or U.S. patent application publications)

☐ Are attached.

☑ Have already been filed in the above-identified U.S. application on 6/29/11, 6/8/11, 12/14/10, 10/12/10

II. Claims Correspondence Table:

Claims in US Application	Patentable Claims in the corresponding PCT Application	Explanation regarding the correspondence
1-9	1-9	Sufficiently corresponds
15-23	1-9	Sufficiently corresponds

III. All the claims in the US application sufficiently correspond to the patentable claims in the corresponding PCT application.

Signature /Jeffrey Lotspeich/	Date September 1, 2011
Name (Print/Typed) Jeffrey J. Lotspeich	Registration Number 45,737

UNITED STATES PATENT AND TRADEMARK OFFICE

Commissioner for Patents
United States Patent and Trademark Office
P.O. Box 1450
Alexandria, VA 22313-1450
www.uspto.gov

MAILED

DEC 09 2010

PCT LEGAL ADMINISTRATION

BIRCH STEWART KOLASCH & BIRCH
PO BOX 747
FALLS CHURCH VA 22040-0747

In re Application of NUMATA et al. Application No.: 12/863,983 PCT No.: PCT/JP09/050118 Int. Filing Date: 08 January 2009 Priority Date: 10 January 2008 Attorney Docket No.: 0032-0313PUS1 For: ANTIBODY DIRECTED AGAINST PCRV	DECISION ON PETITION TO REVIVE UNDER 37 CFR 1.137(b)

The petition to revive under 37 CFR 1.137(b) filed 21 July 2010 in the above-captioned application is hereby **GRANTED** .

Applicant's statement that "the entire delay in filing the required reply from the due date for the required reply until the filing of a grantable petition under 37 CFR 1.137(b) was unintentional" meets the requirements of 37 CFR 1.137(b)(3).

A review of the application file reveals that the petition fee of $1620 (small entity) has been paid and the basic national fee of $330 was provided. Thus, the requirements of 37 CFR 1.137(b) have been satisfied. Therefore, the request to revive the application abandoned under 35 U.S.C. 371(d) is granted as to the National stage in the United States of America.

This application is being forwarded to the United States Designated/Elected Office for further processing. The $130 surcharge for filing the declaration and $130 processing fee for filing the English translation of the international application after the thirty month period will be charged to applicant's deposit account per his authorization.

The 35 U.S.C. 371(c)(1), (c)(2) and (c)(4) date is 21 July 2010.

/Cynthia M. Kratz/
Cynthia M. Kratz
Attorney Advisor
PCT Legal Office
Office of PCT Legal Administration

Telephone: 571-272-3286

UNITED STATES PATENT AND TRADEMARK OFFICE

Commissioner for Patents
United States Patent and Trademark Office
P.O. Box 1450
Alexandria, VA 22313-1450
www.uspto.gov

BIRCH STEWART KOLASCH & BIRCH
PO BOX 747
FALLS CHURCH VA 22040-0747

MAILED
FEB 16 2012
OFFICE OF PETITIONS

In re Application of	
NUMATA et al.	**: DECISION ON REQUEST TO**
Application No.: 12/863,983	**: PARTICIPATE IN THE PATENT**
Filed: July 21, 2010	**: PROSECUTION HIGHWAY**
Attorney Docket No.: 0032-	**: PROGRAM AND PETITION**
0313PUS1	**: TO MAKE SPECIAL UNDER**
For: ANTIBODY AGAINST PCRV	**: 37 CFR 1.102(a)**

This is a decision on the request to participate in the Patent Prosecution Highway (PPH) program and the petition under 37 CFR 1.102(a), filed on July 26, 2011, to make the above-identified application special.

The request and petition are **DISMISSED**.

A grantable request to participate in the PPH program and petition to make special require:

1. The U.S. application must validly claim priority under 35 U.S.C. 119(a) to one or more applications filed in the JPO, note where the JPO application with similar claims is not the same application from which the U.S. application claims priority then the applicant must identify the relationship between the JPO application with similar claims and the JPO priority application;

2. Applicant must submit a copy of:
   a. The allowable/patentable claim(s) from the JPO application(s) or if a copy of the allowable/patentable claims is available via the Dossier Access System (DAS) applicant may request the USPTO obtain a copy from the DAS, however if the USPTO is unable to obtain a copy from the DAS the applicant will be required to submit a copy;
   b. An English translation of the allowable/patentable claim(s) and
   c. A statement that the English translation is accurate;

3. Applicant must
    a. Ensure all the claims in the U.S. application must sufficiently correspond or be amended to sufficiently correspond to the allowable/patentable claim(s) in the JPO application(s) and
    b. Submit a claims correspondence table in English;

4. Examination of the U.S. application has not begun;

5. Applicant must submit:
    a. Documentation of prior office action:
        i. a copy of the office action(s) just prior to the "Decision to Grant a Patent" from each of the JPO application(s) containing the allowable/patentable claim(s) or
        ii. if the allowable/patentable claims(s) are from a "Notification of Reasons for Refusal" then the Notification of Reasons for Refusal or
        iii. if the JPO application is a first action allowance then no office action from the JPO is necessary should be indicated on the request/petition form;

    Further, if a copy of the documents from a or b above is available via the Dossier Access System (DAS) applicant may request the USPTO obtain a copy from the DAS, however if the USPTO is unable to obtain a copy from the DAS the applicant will be required to submit a copy;
    b. An English language translation of the JPO Office action from (5)(a)(i)-(ii) above
    c. A statement that the English translation is accurate;

6. Applicant must submit:
    a. An IDS listing the documents cited by the JPO examiner in the JPO office action (unless already submitted in this application)
    b. Copies of the documents except U.S. patents or U.S. patent application publications (unless already submitted in this application);

Conditions (1) and (3-6) above are considered to have been met. However, the request to participate in the PPH pilot program and petition fails meet condition (2).

Regarding the requirement of condition (2), applicant has failed to supply a statement that the English translation of the claims is accurate. Therefore, the request cannot be granted at this time.

Applicant is given **ONE** opportunity within a time period of **ONE MONTH or THIRTY DAYS**, whichever is longer, from the mailing date of this decision to correct the deficiencies. **NO EXTENSION OF TIME UNDER 37 CFR 1.136 IS PERMITTED.** If the deficiencies are not corrected with the time period given, the application will await action in its regular turn.

Response must be filed via the Electronic Filing System (EFS) using the document description: Petition to make special under Patent Pros Hwy. Any preliminary amendments and IDS submitted with the PPH documents must be separately indexed as a preliminary amendment and IDS, respectively.

Telephone inquiries concerning this decision should be directed to JoAnne Burke at 571-272-4584.

All other inquiries concerning the examination or status of the application is accessible in the PAIR system at http://www.uspto.gov/ebc.index.html.

Thurman K. Page

Thurman Page
Petitions Examiner
Office of Petitions

30 SEP 20

United States Patent and Trademark Office

Commissioner for Patents
United States Patent and Trademark Office
P.O. Box 1450
Alexandria, VA 22313-1450
www.uspto.gov

YOUNG & THOMPSON
209 Madison Street
Suite 500
Alexandria VA 22314

In re Application of	:	
Sandberg et al.	:	
Application No.: 12/863,996	:	
PCT No.: PCT/SE2009/050044	:	
Int. Filing Date: 16 January 2009	:	DECISION
Priority Date: 24 January 2008	:	
Attorney Docket No.: 1550-1048	:	
For: Method And Arrangement For Controlling	:	
The Milking By A Milking Machine	:	

This is in response to the declaration filed on 22 July 2010, which is being treated under 37 CFR 1.42.

BACKGROUND

This international application was filed on 16 January 2009, claimed a priority date of 24 January 2008, and designated the United States. On 30 July 2009, the International Bureau transmitted a copy of the published international application to the USPTO. The 30-month period for payment of the basic national fee in the U.S. expired as of midnight on 26 July 2010 (since 24 July 2010 was a Saturday). Applicants filed *inter alia* the basic national fee on 22 July 2010.

DISCUSSION

Inspection of the declaration filed on 22 July 2010 reveals that it indicates that inventor Ola Sandberg is deceased. 37 CFR 1.42 provides in part that

> In case of the death of the inventor, the legal representative (executor, administrator, etc.) of the deceased inventor may make the necessary oath or declaration, and apply for and obtain the patent.

Meanwhile, 37 CFR 1.497(b)(2), as amended effective 08 September 2000, provides that

> If the person making the oath or declaration is not the inventor (§§ 1.42, 1.43 or 1.47), the oath or declaration shall state the relationship of the person to the inventor, and, upon information and belief, the facts which the inventor would have been required to state. If the person signing the oath or declaration is the legal representative of a deceased inventor, the oath or declaration shall also state that the person is a legal representative and the citizenship, residence and mailing address of the legal representative.

Examination of the declaration filed on 22 July 2010 reveals that it has been signed on behalf of Ola Sandberg by Eva Pia Sandstedt in the capacity of "legal representative." The declaration lists residence, citizenship and postal address information for both the decedent and

the legal representative. The declaration has also been signed by surviving joint inventor Torbjorn Petterson. This declaration is acceptable under 37 CFR 1.42, for purposes of compliance with 37 CFR 1.497(a) and (b).

DECISION

The declaration filed on 22 July 2010 is **ACCEPTED** under 37 CFR 1.42.

This application is being returned to the Office of Patent Application Processing. Its date under 35 U.S.C. 371(c)(1), (2) and (4) is **22 July 2010**.

/George Dombroske/
George Dombroske
PCT Legal Examiner
Office of PCT Legal Administration
Tel: (571) 272-3283

3 1 AUG 2010

UNITED STATES PATENT AND TRADEMARK OFFICE

Commissioner for Patents
United States Patent and Trademark Office
P.O. Box 1450
Alexandria, VA 22313-1450
www.uspto.gov

BUCHANAN, INGERSOLL & ROONEY, PC
POST OFFICE BOX 1404
ALEXANDRIA, VA 22313-1404

In re Application of	:	
SELIVANSKY	:	
Application No.: 12/864,029	:	DECISION
PCT No.: PCT/IL2009/000081	:	
Int. Filing Date: 21 January 2009	:	
Priority Date: 22 January 2008	:	
Attorney's Docket No.: 0076873-000008	:	
For: SYSTEM FOR CUTTING MULTIFILAMENT	:	
STRAND TO A PLURALITY OF FILAMENTS OF	:	
THE SAME GIVEN LENGTH	:	

This decision is in response to applicant's petition under 37 CFR 1.137(b) filed 26 July 2010 in the United States Patent and Trademark Office (USPTO).

BACKGROUND

On 21 January 2009, applicant filed international application PCT/IL2009/000081, which designated the U.S. and claimed a priority date of 22 January 2008. A copy of the international application was communicated to the USPTO from the International Bureau on 30 July 2009. The thirty-month period for paying the basic national fee in the United States expired at midnight on 22 July 2010.

On 22 July 2010, applicant filed a submission for entry into the national stage in the United States. The submission did not include the U.S. Basic National Fee.

On 26 July 2010, applicant filed the instant petition under 37 CFR 1.137(b).

DISCUSSION

A petition to revive the present application under 37 CFR 1.137(b) must include:

(1) The required reply;
(2) The petition fee;

(3) A statement that the entire delay in filing the required reply from the due date for the reply until the filing of a grantable petition was unintentional.

As to item (1), the basic national fee was submitted on 26 July 2010.

As to item (2), applicants submitted the petition fee on 26 July 2010.

As to item (3), the required statement has been provided.

A review of the application file reveals that, with the filing of the present petition and accompanying papers, a proper response has been submitted and all of the requirements of 37 CFR 1.137(b) for revival have been satisfied and revival is therefore appropriate.

CONCLUSION

The petition under 37 CFR 1.137(b) is **GRANTED** for the reasons set forth above.

This application is being forwarded to the National Stage Processing Branch of the Office of PCT Operations to continue national stage processing of the application including preparing and mailing a NOTIFICATION OF MISSING REQUIREMENTS (Form PCT/DO/EO/905) requiring an executed oath or declaration of the inventor in compliance with 37 CFR 1.497(a)-(b).

/Daniel Stemmer/

Daniel Stemmer
Legal Examiner
PCT Legal Affairs
Office of Patent Cooperation Treaty
Legal Administration
Telephone: (571) 272-3301

United States Patent and Trademark Office

Commissioner for Patents
United States Patent and Trademark Office
P.O. Box 1450
Alexandria, VA 22313-1450
www.uspto.gov

MAILED

DEC 06 2010

PCT LEGAL ADMINISTRATION

KF Ross PC
5683 Riverdale Avenue
Box 900
Bronx NY 10471

In re Application of
Philipp
Application No.: 12/864,046
PCT No.: PCT/AT2009/000095
Int. Filing Date: 09 March 2009
Priority Date: 17 March 2008
Attorney Docket No.: 24704
For: Method For Producing An Oil Binding Agent

DECISION

This is in response to the correspondence filed on 22 July 2010.

BACKGROUND

International application PCT/AT2009/000095 was filed on 09 March 2009, claimed an earlier priority date of 17 March 2008, and designated the United States. The International Bureau transmitted a copy of the published international application to the USPTO on 24 September 2009. The period for payment of the basic national fee in the United States expired as of midnight on 17 September 2010. Applicants filed *inter alia* a basic national fee in 12/864,046 on 22 July 2010.

DISCUSSION

Review of the instant application file reveals that the Application Data Sheet filed on 22 July 2010 refers to PCT/AT2009/000095, while the Electronic Acknowledgment Receipt dated 22 July 2010 shows that applicants indicated "PCT/AP09/00095" was the subject of the submission. The bibliographic information for this case resembles that for PCT/AT2009/000095. For instance, PCT/AT2009/000095 has the same international filing date, priority date, title and applicant as shown on the ADS in this application. In view of the discrepancy, it is not sufficiently clear which international application was intended to enter the national stage. Resolution of this matter would require a formal petition (and fee) under 37 CFR 1.182, clarifying which international application was intended to enter the national stage under 35 U.S.C. 371.

DECISION

The papers filed on 22 July 2010 are **NOT ACCEPTED** under 35 U.S.C. 371, without prejudice..

Any response must be filed within **TWO (2) MONTHS** from the mailing date of this Decision, extendable under 37 CFR 1.136(a). Failure to timely reply will result in **ABANDONMENT**. It would be appropriate to entitle such a response as "Petition Under 37 CFR 1.182."

Any further correspondence with respect to this matter may be filed electronically via EFS-Web selecting the document description "Petition for review and processing by the PCT Legal Office" or by mail addressed to Mail Stop PCT, Commissioner for Patents, Office of PCT Legal Administration, P.O. Box 1450, Alexandria, Virginia 22313-1450, with the contents of the letter marked to the attention of the Office of PCT Legal Administration.

/George Dombroske/
George Dombroske
PCT Legal Examiner
Office of PCT Legal Administration
Tel: (571) 272-3283

United States Patent and Trademark Office

Commissioner for Patents
United States Patent and Trademark Office
P.O. Box 1450
Alexandria, VA 22313-1450
www.uspto.gov

MAILED

MAR 02 2011

PCT LEGAL ADMINISTRATION

KF Ross PC
5683 Riverdale Avenue
Box 900
Bronx NY 10471

In re Application of
Philipp
Application No.: 12/864,046
PCT No.: PCT/AT2009/000095
Int. Filing Date: 09 March 2009
Priority Date: 17 March 2008
Attorney Docket No.: 24704
For: Method For Producing An Oil Binding Agent

DECISION

This is in response to the petition under 37 CFR 1.182 filed on 03 January 2011.

DISCUSSION

In a Decision mailed on 06 December 2010, applicant was advised that

> Review of the instant application file reveals that the Application Data Sheet filed on 22 July 2010 refers to PCT/AT2009/000095, while the Electronic Acknowledgment Receipt dated 22 July 2010 shows that applicants indicated "PCT/AP09/00095" was the subject of the submission. The bibliographic information for this case resembles that for PCT/AT2009/000095. For instance, PCT/AT2009/000095 has the same international filing date, priority date, title and applicant as shown on the ADS in this application. In view of the discrepancy, it is not sufficiently clear which international application was intended to enter the national stage. Resolution of this matter would require a formal petition (and fee) under 37 CFR 1.182, clarifying which international application was intended to enter the national stage under 35 U.S.C. 371.

In response, petitioner states (in part) that

> the present application is the US National Phase of PCT/AT2009/000095 filed 9 March 2009. The erroneous reference to International Application PCT/AP09/00095 in the Electronic Acknowledgment Receipt by the undersigned attorneys as the corresponding application was purely a typographical error, committed inadvertently without any deceptive intent.

In view of the totality of the evidence now of record, it would be appropriate to accept petitioner's statements as to the nature of the discrepancy and as to the identity of the international application. With respect to petitioner's alternative request for relief other than by petition under 37 CFR 1.182, counsel is respectfully advised that present USPTO policy requires the filing of a grantable petition under 37 CFR 1.182 under the fact pattern present in this case.

DECISION

The petition is **GRANTED** as described above.

This application is being returned to the Office of Patent Application Processing for processing as the national stage under 35 U.S.C. 371 of PCT/AT2009/000095, including the correction of the electronic records of the USPTO (PALM) to reflect the correct parentage. The date of this application under 35 U.S.C. 371(c)(1), (2) and (4) is **18 September 2010** (the date a declaration compliant with 37 CFR 1.497(a) and (b) was received).

/George Dombroske/
George Dombroske
PCT Legal Examiner
Office of PCT Legal Administration
Tel: (571) 272-3283

UNITED STATES PATENT AND TRADEMARK OFFICE

MAILED

JAN 18 2011

PCT LEGAL ADMINISTRATION

Commissioner for Patents
United States Patent and Trademark Office
P.O. Box 1450
Alexandria, VA 22313-1450
www.uspto.gov

FULBRIGHT & JAWORSKI L.L.P.
Attn: MN IP Docket
600 Congress Avenue
Suite 2400
Austin TX 78701

In re Application of GAITONDE et al. Application No.: 12/864,063 PCT No.: PCT/GB08/51124 Int. Filing Date: 27 November 2008 Priority Date: 23 January 2008 Attorney Docket No.: VESH.P0050US For: NOVEL SALT OF TEGASEROD	DECISION on PETITION UNDER 37 CFR 1.137(b)

The petition to revive under 37 CFR 1.137(b) filed 21 October 2010 in the above-captioned application is hereby **GRANTED** as follows:

Applicant's statement that "the entire delay in filing the required reply from the due date for the required reply until the filing of a grantable petition under 37 CFR 1.137(b) was unintentional" meets the requirements of 37 CFR 1.137(b)(3).

A review of the application file reveals that the basic national fee has now been provided. The required petition fee of $810 was also paid. Thus, the requirements of 37 CFR 1.137(b) have been satisfied. Therefore, the request to revive the application abandoned under 35 U.S.C. 371(d) is granted as to the National stage in the United States of America.

The application will be forwarded to the United States Designated/Elected Office for further processing including issuance of a Notification of Missing Requirements indicating, *inter alia*, that an oath or declaration, in compliance with 37 CFR 1.497(a) and (b), is required.

/Cynthia M. Kratz/
Cynthia M. Kratz
Attorney Advisor
PCT Legal Office
Office of PCT Legal Administration
Telephone: (571) 272-3286

UNITED STATES PATENT AND TRADEMARK OFFICE

UNITED STATES DEPARTMENT OF COMMERCE
United States Patent and Trademark Office
Address: COMMISSIONER FOR PATENTS
P.O. Box 1450
Alexandria, Virginia 22313-1450
www.uspto.gov

APPLICATION NO.	FILING DATE	FIRST NAMED INVENTOR	ATTORNEY DOCKET NO.	CONFIRMATION NO.
12/864,072	07/22/2010	Nobuaki Yamada	15820-000004/US	2018

30593 7590 10/29/2010
HARNESS, DICKEY & PIERCE, P.L.C.
P.O. BOX 8910
RESTON, VA 20195

EXAMINER

ART UNIT	PAPER NUMBER
2872	

MAIL DATE	DELIVERY MODE
10/29/2010	PAPER

Please find below and/or attached an Office communication concerning this application or proceeding.

The time period for reply, if any, is set in the attached communication.

UNITED STATES PATENT AND TRADEMARK OFFICE

Commissioner for Patents
United States Patent and Trademark Office
P.O. Box 1450
Alexandria, VA 22313-1450
www.uspto.gov

HARNESS, DICKEY & PIERCE, P.L.C.
P.O. BOX 8910
RESTON VA 20195

In re Application of	
Nobuaki YAMADA	**: DECISION ON REQUEST TO**
Application No.: 12/864,072	**: PARTICIPATE IN THE PATENT**
Filed: 22 July 2010	**: PROSECUTION HIGHWAY**
Attorney Docket No.: 15820-000004/US	**: PROGRAM AND PETITION**
For: LIQUID TANK, VIEWING	**: TO MAKE SPECIAL UNDER**
DEVICE FOR UNDER-LIQUID	**: 37 CFR 1.102(d)**
OBSERVATION, AND OPTICAL FILM	

This is a decision on the request to participate in the Patent Prosecution Highway (PPH) program and the petition under 37 CFR 1.102(a), filed 22 July 2010, to make the above-identified application special.

The request and petition are **GRANTED**.

Discussion

A grantable request to participate in the PPH pilot program and petition to make special require:

1. The U.S. application is
    a. a Paris Convention application which either
        i. validly claims priority under 35 U.S.C. 119(a) and 37 CFR 1.55 to one or more applications filed in the JPO, or
        ii. validly claims priority to a PCT application that contains no priority claims, or
    b. a national stage application under the PCT (an application which entered the national stage in the U.S. from a PCT international application after compliance with 35 U.S.C. 371), which PCT application
        i. validly claims priority to an application filed in the JPO, or
        ii. validly claims priority to a PCT application that contains no priority claims, or
        iii. contains no priority claim, or
    c. a so-called bypass application filed under 35 U.S.C. 111(a) which validly claims benefit under 35 U.S.C. 120 to a PCT application, which PCT application
        i. validly claims priority to an application filed in the JPO, or
        ii. validly claims priority to a PCT application that contains no priority claims, or

iii. contains no priority claim;

2. Applicant must submit a copy of:
   a. The allowable/patentable claim(s) from the JPO application(s);
   b. An English translation of the allowable/patentable claim(s) and
   c. A statement that the English translation is accurate;
3. Applicant must:
   a. Ensure all the claims in the U.S. application must sufficiently correspond or be amended to sufficiently correspond to the allowable/patentable claim(s) in the JPO application(s) and
   b. Submit a claims correspondence table in English;
4. Examination of the U.S. application has <u>not</u> begun;
5. Applicant must submit:
   a. Documentation of prior office action:
      i. a copy of the office action(s) just prior to the "Decision to Grant a Patent" from each of the JPO application(s) containing the allowable/patentable claim(s) or
      ii. if the allowable/patentable claims(s) are from a "Notification of Reasons for Refusal" then the Notification of Reasons for Refusal or
      iii. if the JPO application is a first action allowance then no office action from the JPO is necessary should be indicated on the request/petition form;
   b. An English language translation of the JPO Office action from (5)(a)(i)-(ii) above
   c. A statement that the English translation is accurate;
6. Applicant must submit:
   a. An IDS listing the documents cited by the JPO examiner in the JPO office action (unless already submitted in this application)
   b. Copies of the documents except U.S. patents or U.S. patent application publications (unless already submitted in this application);

The request to participate in the PPH pilot program and petition comply with the above requirements. Accordingly, the above-identified application has been accorded "special" status.

Inquiries concerning this decision should be directed to Lee W. Young at 571-272-4549.

All other inquiries concerning the examination or status of the application is accessible in the PAIR system at http://www.uspto.gov/ebc.index.html.

This application will be forwarded to the examiner for action on the merits commensurate with this decision.

Lee W. Young
TQAS
Technology Center 2800

UNITED STATES PATENT AND TRADEMARK OFFICE

Commissioner for Patents
United States Patent and Trademark Office
P.O. Box 1450
Alexandria, VA 22313-1450
www.uspto.gov

MAILED

OCT 20 2010

PCT LEGAL ADMINISTRATION

JAMES W. PRAVEL
PRAVEL INTELLECTUAL PROPERTY LAW, PC
1800 DIAGONAL ROAD
SUITE 600
ALEXANDRIA VA 22314

In re Application of	:	
ARA (Deceased)	:	DECISION ON
Application No.: 12/864,093	:	
PCT No.: PCT/ES08/00038	:	SUBMISSION
Int. Filing Date: 25 January 2008	:	
Priority Date: None	:	UNDER 37 CFR 1.42
Attorney Docket no.: 0030.38	:	
For: PROCESS FOR THE PLASTICIZATION	:	
OF LACTIC ACID POLYMERS	:	

This is a decision on applicant's Submission under 37 CFR 1.42 along with an executed declaration filed in the United States Patent and Trademark Office (USPTO) on 23 September 2010.

BACKGROUND

On 22 July 2010, applicant submitted a request for entry into U.S. National Stage under 35 U.S.C. 371 along with the basic national fee and a declaration under PCT Rule 4.17. The declaration was executed by the joint inventors Paolo Ara and Stefano Fiori.

On 23 September 2010, applicant filed an executed declaration identifying and executed by Jose Maia Garreta-Such as the legal representative of the deceased inventor Paolo Ara.

DISCUSSION

The declaration submitted on 22 July 2010 was filed under PCT Rule 4.17 in the Spanish language and signed by the inventors. The declaration identified the international application to which it is directed and thus, is in compliance with 37 CFR 1.497(a) and furnished pursuant to PCT Rule 26*ter.2*. *See* MPEP 1893.01(e) and 37 CFR 1.69(b).

Applicant's submission of the executed declaration on 22 July 2010 meets the requirements of 37 CFR 1.497(a), is in accord with PCT Rule 4.17(iv) and is acceptable. No

surcharge is required as the filing the declaration occurred prior to the thirty month period.

CONCLUSION

The executed declaration filed on 22 July 2010, is in compliance with PCT Rule 4.17 and 37 CFR 1.497, and is acceptable.

The application will be forwarded to the United States Designated/Elected Office for further processing. The 35 U.S.C. 371(c)(1), (c)(2) and (c)(4) date is 22 July 2010.

/Cynthia M. Kratz/
Cynthia M. Kratz
Attorney Advisor
PCT Legal Office
Office of PCT Legal Administration

Telephone: 571-272-3286
Facsimile: 571-273-0459

UNITED STATES PATENT AND TRADEMARK OFFICE

Commissioner for Patents
United States Patent and Trademark Office
P.O. Box 1450
Alexandria, VA 22313-1450
www.uspto.gov

MAILED

DEC 17 2010

PCT LEGAL ADMINISTRATION

WESTMAN CHAMPLIN & KELLY, P.A.
SUITE 1400
900 SECOND AVENUE SOUTH
MINNEAPOLIS MN 55402

In re Application of	:	
CASE, Steven K., et al.	:	
Application No.: 12/864,110	:	DECISION ON
PCT No.: PCT/US2009/031744	:	
Int. Filing Date: 23 January 2009	:	REQUEST
Priority Date: 23 January 2008	:	
Attorney Docket No.: C34.12-0167	:	UNDER 37 CFR 1.42
For: HIGH SPEED OPTICAL ... MULTIPLE ILLUMINATION IMAGERY	:	

A review of the declaration reveals an indication that inventor Steven K. Case is deceased. Applicants' submission has been treated as a request for status under 37 CFR 1.42.

BACKGROUND

On 18 August 2010, the Office mailed Notification of Missing Requirements (Form PCT/DO/EO/905) indicating, *inter alia*, that an oath or declaration in compliance with 37 CFR 1.497(a)-(b) was required.

On 14 October 2010, applicants filed this request for status under 37 CFR 1.42.

DISCUSSION

Under 35 U.S.C. §117, legal representatives of deceased inventors may make application for patent upon compliance with the requirements and on the same terms and conditions applicable to the inventor. The "legal representative (executor, administrator, etc.) of the deceased inventor may make the necessary oath or declaration, and apply for and obtain the patent." 37 CFR 1.42.

The declaration must list the inventors and the inventors' citizenships and the legal representative and the legal representative's citizenship, residence and postal address. See 37 CFR 1.497. The declaration lists the information for the legal representative, but not for the inventor. As such, the declaration does not satisfy 37 CFR 1.497(a)-(b) and 37 CFR 1.42.

CONCLUSION

For the above reasons, the request for status under 37 CFR 1.42 is **REFUSED**.

Applicant is required to submit a declaration in compliance with 37 CFR 1.497 and 1.42, within a time period of **TWO (2) MONTHS** from the mail date of this Decision. THIS PERIOD FOR RESPONSE MAY BE EXTENDED UNDER 37 CFR 1.136(a). FAILURE TO PROPERLY RESPOND WILL RESULT IN ABANDONMENT. Any request for reconsideration of this decision should include a cover letter entitled "Renewed Submission Under 37 CFR 1.42."

Any further correspondence with respect to this matter may be filed electronically via EFS-Web selecting the document description "Petition for review and processing by the PCT Legal Office" or by mail addressed to Mail Stop PCT, Commissioner for Patents, Office of PCT Legal Administration, P.O. Box 1450, Alexandria, Virginia 22313-1450, with the contents of the letter marked to the attention of the Office of PCT Legal Administration.

/Erin P. Thomson/

Erin P. Thomson
Attorney Advisor
PCT Legal Administration

Telephone: (571) 272-3292

UNITED STATES PATENT AND TRADEMARK OFFICE

Commissioner for Patents
United States Patent and Trademark Office
P.O. Box 1450
Alexandria, VA 22313-1450
www.uspto.gov

MAILED

MAR 25 2011

PCT LEGAL ADMINISTRATION

WESTMAN CHAMPLIN & KELLY, P.A.
SUITE 1400
900 SECOND AVENUE SOUTH
MINNEAPOLIS MN 55402

In re Application of	:	
CASE, Steven K., et al.	:	
Application No.: 12/864,110	:	DECISION ON
PCT No.: PCT/US2009/031744	:	
Int. Filing Date: 23 January 2009	:	REQUEST
Priority Date: 23 January 2008	:	
Attorney Docket No.: C34.12-0167	:	UNDER 37 CFR 1.42
For: HIGH SPEED OPTICAL ... MULTIPLE	:	
ILLUMINATION IMAGERY	:	

This is a decision on applicants' renewed request for status under 37 CFR 1.42, filed in the United States Patent and Trademark Office on 21 January 2011.

BACKGROUND

On 17 December 2010, the Office mailed Decision On Request Under 37 CFR 1.42, refusing applicants' request.

On 21 January 2011, applicants filed this renewed request for status under 37 CFR 1.42.

DISCUSSION

Under 35 U.S.C. §117, legal representatives of deceased inventors may make application for patent upon compliance with the requirements and on the same terms and conditions applicable to the inventor. The "legal representative (executor, administrator, etc.) of the deceased inventor may make the necessary oath or declaration, and apply for and obtain the patent." 37 CFR 1.42.

The 21 January 2011 declaration lists the inventors and their citizenships and the legal representative and the legal representative's citizenship, residence and postal address, satisfying 37 CFR 1.42 and 37 CFR 1.497(a)-(b).

CONCLUSION

For the above reasons, the request for status under 37 CFR 1.42 is **GRANTED**.

This application is being forwarded to the National Stage Processing Division of the Office of Patent Application Processing for further action consistent with this decision.

/Erin P. Thomson/

Erin P. Thomson
Attorney Advisor
PCT Legal Administration

Telephone: (571) 272-3292

UNITED STATES PATENT AND TRADEMARK OFFICE

Commissioner for Patents
United States Patent and Trademark Office
P.O. Box 1450
Alexandria, VA 22313-1450
www.uspto.gov

MAILED

MAR 02 2011

PCT LEGAL ADMINISTRATION

HULSEY IP INTELLECTUAL PROPERTY LAWYERS, P.C.
919 Congress Avenue, Suite 919
AUSTIN TX 78701

In re Application of HEIL et al. :
Application No.: 12/864,123 : DECISION ON PETITION
PCT Appl No.: PCT/EP08/59133 :
Int'l Filing Date: 11 July 2008 : UNDER 37 CFR 1.47(a)
Priority Date: 20 March 2008 :
Attorney Docket No.: 0001-01-01 :
For: METHOD FOR CONTROLLING ION :
ENERGY IN RADIO FREQUENCY PLASMAS :

This is a decision on applicant's petition under 37 CFR 1.47(b), treated as a petition under 37 CFR 1.47(a)[1], and filed in the United States Patent and Trademark Office (USPTO) on 20 December 2010, to accept the application without the signature of joint inventor BRIAN GEORGE HEIL.

BACKGROUND

On 22 July 2010, applicant filed a transmittal letter requesting U.S. national stage entry of international application PCT/EP08/59133.

On 20 September 2010, a Notification to Missing Requirements was mailed to applicant indicating *inter alia*, that an oath or declaration, in accordance with 37 CFR 1.497(a) and (b), was required.

On 20 December 2010, applicant filed the instant petition along with a declaration, executed by the joint inventors on behalf of the nonsigning inventor. The petition under 37 CFR 1.47(a), in an attempt to satisfy the requirements of 35 U.S.C. 371(c)(4), requested the acceptance of the application without the signature of inventor BRIAN GEORGE HEIL alleging that the inventor refuses to sign the application papers.

DISCUSSION

A petition under 37 CFR §1.47(a) must be accompanied by (1) the fee under 37 CFR §1.17(g), (2) factual proof that the non-signing joint inventor(s) refuses to execute the application or cannot be reached after diligent effort, (3) a statement of the last known address of the non-signing inventor(s), and (4) an oath or declaration by each available joint inventor on his or her own behalf and on behalf of the non-signing joint inventor(s).

---

[1] 37 CFR 1.47(b) applies whenever *all of the inventors* refuse to execute the application or cannot be found or reached after diligent effort. Here, where only one of the joint inventors refuses to sign or is unavailable to sign the application, a petition under 37 CFR 1.47(a) is required.

Petitioner satisfied Item (1) with the payment of the petition fee. Item (3) is satisfied because the last known address for the non-signing inventor was provided. Item (4) is satisfied with the submission of the declaration executed in compliance with 37 CFR 1.497(a) and (b).

With respect to Item (2) above, Petitioner merely states that the inventor refuses to execute the papers required for filing the present patent application. Petitioner does not provide any detail regarding the inventor's refusal. The presentation of evidence with respect to proprietary interest, that inventor Heil was employed by Ruhr University and that the invention was in the scope of his employment, is not necessary to a petition under 37 CFR 1.47(a).

Section 409.03(d) of the Manual of Patent Examining Procedure (MPEP), Proof of Unavailability or Refusal, states, in pertinent part:

> A refusal by an inventor to sign an oath or declaration when the inventor has not been presented with the application papers does not itself suggest that the inventor is refusing to join the application unless it is clear that the inventor understands exactly what he or she is being asked to sign and refuses to accept the application papers. *A copy of the application papers should be sent to the last known address of the nonsigning inventor*, or, if the nonsigning inventor is represented by counsel, to the address of the nonsigning inventor's attorney.... *It is reasonable to require that the inventor be presented with the application papers before a petition under 37 CFR 1.47 is granted since such a procedure ensures that the inventor is apprised of the application to which the oath or declaration is directed. In re Gray*, 115 USPQ 80 (Comm'r Pat. 1956)
>
> Where a refusal of the inventor to sign the application papers is alleged, the circumstances of the presentation of the application papers and of the refusal must be specified in a statement of facts by the person who presented the inventor with the application papers and/or to whom the refusal was made. Statements by a party not present when an oral refusal is made will not be accepted.
>
> *Proof that a bona fide attempt was made to present a copy of the application papers (specification, including claims, drawings, and oath or declaration) to the nonsigning inventor for signature, but the inventor refused to accept delivery of the papers or expressly stated that the application papers should not be sent, may be sufficient.* When there is an express oral refusal, that fact along with the time and place of the refusal must be stated in the statement of facts. When there is an express written refusal, a copy of the document evidencing that refusal must be made part of the statement of facts. The document may be redacted to remove material not related to the inventor's reasons for refusal.
>
> When it is concluded by the 37 CFR 1.47 applicant that a nonsigning inventor's conduct constitutes a refusal, all facts upon which the conclusion is based should be stated in a statement of facts in support of the petition or directly in the petition. If there is documentary evidence to support facts alleged in the petition or any statement of facts, such evidence should be submitted. Whenever a nonsigning inventor gives a reason for refusing to sign the application oath or declaration, that reason should be stated in the petition.

(Emphasis added.)

MPEP Section 409.03(d) also provides guidance where inability to find or reach a

nonsigning inventor "after diligent effort" is the reason for filing under 37 CFR 1.47. A statement of facts should be submitted that fully describes the exact facts which are relied on to establish that a diligent effort was made. The statement of facts must be signed, where at all possible, by a person having first-hand knowledge of the facts recited therein. Statements based on hearsay will not normally be accepted. Copies of documentary evidence such as internet searches, certified mail return receipts, cover letters of instructions, telegrams, that support a finding that the nonsigning inventor could not be found or reached should be made part of the statement. The steps taken to locate the whereabouts of the nonsigning inventor should be included in the statement of facts. It is important that the statement contain facts as opposed to conclusions.

As set forth above, Petitioner's first hand statement of facts under 37 CFR 1.47(a) should be submitted to describe the inventor's refusal or the efforts to locate the nonsigning inventor. Therefore, it cannot be concluded at this time that the nonsigning inventor refuses or is unavailable to sign the application. Petitioner has not satisfied Item (2). Accordingly, it is inappropriate to accord the national stage application status under 37 CFR §1.47(a) at this time.

CONCLUSION

The petition under 37 CFR §1.47(a) is **DISMISSED WITHOUT PREJUDICE**.

Any reconsideration on the merits of the petition under 37 CFR §1.47(a) must be filed within TWO (2) MONTHS from the mail date of this decision. Any reconsideration request should include a cover letter entitled "Renewed Petition Under 37 CFR §1.47(a)." No petition fee is required. Any further extensions of time available may be obtained under 37 CFR 1.136(a).

Any further correspondence with respect to this matter may be filed electronically via EFS-Web selecting the document description "Petition for review and processing by the PCT Legal Office" or by mail addressed to Mail Stop PCT, Commissioner for Patents, Office of PCT Legal Administration, P.O. Box 1450, Alexandria, Virginia 22313-1450, with the contents of the letter marked to the attention of the Office of PCT Legal Administration.

/Cynthia M .Kratz/
Cynthia M. Kratz
Attorney Advisor
PCT Legal Office
Office of PCT Legal Administration
Telephone: (571) 272-3286
Facsimile (571) 272-0459

UNITED STATES PATENT AND TRADEMARK OFFICE

Commissioner for Patents
United States Patent and Trademark Office
P.O. Box 1450
Alexandria, VA 22313-1450
www.uspto.gov

MAILED

MAY 19 2011

PCT LEGAL ADMINISTRATION

HULSEY IP INTELLECTUAL PROPERTY LAWYERS, P.C.
919 Congress Avenue, Suite 919
AUSTIN TX 78701

In re Application of HEIL et al.	:
Application No.: 12/864,123	: DECISION ON PETITION
PCT Appl No.: PCT/EP08/59133	:
Int'l Filing Date: 11 July 2008	: UNDER 37 CFR 1.47(a)
Priority Date: 20 March 2008	:
Attorney Docket No.: 0001-01-01	:
For: METHOD FOR CONTROLLING ION	:
ENERGY IN RADIO FREQUENCY PLASMAS	:

This is a decision on applicant's renewed petition under 37 CFR 1.47(a), filed in the United States Patent and Trademark Office (USPTO) on 24 March 2011, to accept the application without the signature of joint inventor BRIAN GEORGE HEIL.

BACKGROUND

On 22 July 2010, applicant filed a transmittal letter requesting U.S. national stage entry of international application PCT/EP08/59133.

On 20 September 2010, a Notification to Missing Requirements was mailed to applicant indicating *inter alia*, that an oath or declaration, in accordance with 37 CFR 1.497(a) and (b), was required.

On 20 December 2010, applicant filed the instant petition along with a declaration, executed by the joint inventors on behalf of the nonsigning inventor. The petition under 37 CFR 1.47(a), in an attempt to satisfy the requirements of 35 U.S.C. 371(c)(4), requested the acceptance of the application without the signature of inventor BRIAN GEORGE HEIL alleging that the inventor refuses to sign the application papers.

On 02 March 2011, a decision dismissing the petition was mailed to applicant indicating that further factual proof that the nonsigning inventor refused to sign the application papers was necessary.

DISCUSSION

A petition under 37 CFR §1.47(a) must be accompanied by (1) the fee under 37 CFR §1.17(g), (2) factual proof that the non-signing joint inventor(s) refuses to execute the application or cannot be reached after diligent effort, (3) a statement of the last known address of

the non-signing inventor(s), and (4) an oath or declaration by each available joint inventor on his or her own behalf and on behalf of the non-signing joint inventor(s).

Petitioner previously satisfied Items (1), (3) and (4).

With respect to Item (2) above, Petitioner provided the statement of attorney Loren T. Smith. He states he "personally spoken to Dr. Brian Heil and know he was presented with the application papers and after being presented with the application papers, refused to execute the declaration." However, Mr. Smith does not give any detail or supporting documentation regarding which application papers were presented. As set forth in the MPEP Section 409.03(d), a complete copy of the application papers (specification, claims, drawings and declaration) should be presented to the nonsigning inventor. Where a refusal of the inventor to sign the application papers is alleged, the circumstances of the presentation of the application papers and of the refusal must be specified in a statement of facts by the person who presented the inventor with the application papers and/or to whom the refusal was made. Proof of presentation of a copy of the application papers to the nonsigning inventor for signature should be provided. When there is an express oral refusal, that fact along with the time and place of the refusal must be stated in the statement of facts.

As set forth above, Petitioner's first hand statement of facts under 37 CFR 1.47(a) regarding the above should be submitted to describe the inventor's refusal. Therefore, it cannot be concluded at this time that the nonsigning inventor refuses to sign the application. Petitioner has not satisfied Item (2). Accordingly, it is inappropriate to accord the national stage application status under 37 CFR §1.47(a) at this time.

CONCLUSION

The petition under 37 CFR §1.47(a) is **DISMISSED WITHOUT PREJUDICE**.

Any reconsideration on the merits of the petition under 37 CFR §1.47(a) must be filed within TWO (2) MONTHS from the mail date of this decision. Any reconsideration request should include a cover letter entitled "Renewed Petition Under 37 CFR §1.47(a)." No petition fee is required. Any further extensions of time available may be obtained under 37 CFR 1.136(a).

Any further correspondence with respect to this matter may be filed electronically via EFS-Web selecting the document description "Petition for review and processing by the PCT Legal Office" or by mail addressed to Mail Stop PCT, Commissioner for Patents, Office of PCT Legal Administration, P.O. Box 1450, Alexandria, Virginia 22313-1450, with the contents of the letter marked to the attention of the Office of PCT Legal Administration.

/Cynthia M .Kratz/
Cynthia M. Kratz
Attorney Advisor
PCT Legal Office
Office of PCT Legal Administration
Telephone: (571) 272-3286
Facsimile (571) 272-0459

UNITED STATES PATENT AND TRADEMARK OFFICE

Commissioner for Patents
United States Patent and Trademark Office
P.O. Box 1450
Alexandria, VA 22313-1450
www.uspto.gov

MAILED

JUN 2 0 2011

PCT LEGAL ADMINISTRATION

HULSEY IP INTELLECTUAL PROPERTY LAWYERS, P.C.
919 Congress Avenue, Suite 919
AUSTIN TX 78701

In re Application of HEIL et al.	:
Application No.: 12/864,123	: DECISION ON PETITION
PCT Appl No.: PCT/EP08/59133	:
Int'l Filing Date: 11 July 2008	: UNDER 37 CFR 1.47(a)
Priority Date: 20 March 2008	:
Attorney Docket No.: 0001-01-01	:
For: METHOD FOR CONTROLLING ION	:
ENERGY IN RADIO FREQUENCY PLASMAS	:

This is a decision on applicant's renewed petition under 37 CFR 1.47(a), filed in the United States Patent and Trademark Office (USPTO) on 19 May 2011, to accept the application without the signature of joint inventor BRIAN GEORGE HEIL.

BACKGROUND

The procedural history of this application was set forth in the decision mailed on 24 March 2011 and is incorporated herein by reference.

DISCUSSION

A petition under 37 CFR §1.47(a) must be accompanied by (1) the fee under 37 CFR §1.17(g), (2) factual proof that the non-signing joint inventor(s) refuses to execute the application or cannot be reached after diligent effort, (3) a statement of the last known address of the non-signing inventor(s), and (4) an oath or declaration by each available joint inventor on his or her own behalf and on behalf of the non-signing joint inventor(s).

Petitioner previously satisfied Items (1), (3) and (4).

With respect to Item (2) above, Petitioner provides the statement of attorney Loren T. Smith. He states he personally spoke to Dr. Brian Heil and "know[s] he was presented with the specification, claims, abstract and figures" along with the preliminary amendment and other application papers. Mr. Smith states that "Dr. Heil refused to execute the declaration". Based upon Petitioner's first hand statement of facts under 37 CFR 1.47(a) regarding the inventor's refusal, it cannot be concluded at this time that the nonsigning inventor refuses to sign the application. Petitioner satisfied Item (2). Accordingly, it is appropriate to accord the national

stage application status under 37 CFR §1.47(a) at this time.

CONCLUSION

The petitions under 37 CFR 1.47(a) are **GRANTED**.

The U.S. Designated/Elected Office has accepted the application as a 37 CFR 1.47(a) application using the declaration filed 20 December 2010. The application has an international filing date of 11 July 2008 under 35 U.S.C. 363, and a date of 20 December 2010 under 35 U.S.C. 371(c).

As provided in 37 CFR 1.47(a), a notice of the filing of this application will be forwarded to the non-signing inventor at his respective last known address of record. Also, a notice of the filing of this application will be published in the Official Gazette.

/Cynthia M .Kratz/
Cynthia M. Kratz
Attorney Advisor
PCT Legal Office
Office of PCT Legal Administration
Telephone: (571) 272-3286
Facsimile (571) 272-0459

UNITED STATES PATENT AND TRADEMARK OFFICE

Commissioner for Patents
United States Patent and Trademark Office
P.O. Box 1450
Alexandria, VA 22313-1450
www.uspto.gov

MAILED

JUN 2 0 2011

PCT LEGAL ADMINISTRATION

BRIAN GEORGE HEIL
EDISONSTRASSE 29
65199 WIESBADEN
GERMANY

In re Application of HEIL et al.
Application No.: 12/864,123
PCT Appl No.: PCT/EP08/59133
Int'l Filing Date: 11 July 2008
Priority Date: 20 March 2008
Attorney Docket No.: 0001-01-01
For: METHOD FOR CONTROLLING ION ENERGY IN RADIO FREQUENCY PLASMAS

Dear Mr. Heil:

You are named as an inventor in the above identified United States patent application, filed under the provisions of 37 CFR 1.47(a) and 35 U.S.C. § 116. Should a patent be granted, you will be designated as an inventor.

As a named inventor, you are entitled to inspect any paper in the file wrapper of the application, order copies of all or any part thereof (at a prepaid cost per 37 CFR 1.19) or to make your position of record in the application. Alternatively, you may arrange to do any of the preceding through a registered patent agent or attorney presenting written authorization from you. If you care to join in the application, counsel of record (see below) would presumably assist you. Joining in the application would entail the filing of an appropriate oath or declaration by you pursuant to 37 CFR 1.63.

/Cynthia M. Kratz/
Cynthia M. Kratz
Attorney Advisor
PCT Legal Office
Telephone: (571) 272-3286
Facsimile: (571) 273-0459

HULSEY IP INTELLECTUAL PROPERTY LAWYERS, P.C.
919 Congress Avenue, Suite 919
AUSTIN TX 78701

UNITED STATES PATENT AND TRADEMARK OFFICE

Commissioner for Patents
United States Patent and Trademark Office
P.O. Box 1450
Alexandria, VA 22313-1450
www.uspto.gov

MAILED
JUN 15 2011
PCT LEGAL ADMINISTRATION

Harness, Dickey & Pierce, P.L.C.
P.O. Box 828
Bloomfield Hills, MI 48303

In re Application of
FILLOL et al.
Application No.: 12/864,132
PCT No.: PCT/FR2008/000081
Int. Filing: 23 January 2008
Priority Date: None
Attorney Docket No.: 4384-000157/US/NP
For: DEVICE AND METHOD FOR THE SPACE-COLORIMETRIC MEASUREMENT OF A THREE-DIMENSIONAL OBJECT

DECISION ON PETITION UNDER 37 CFR 1.47(a)

This decision is issued in response to applicants' "Petition under 37 CFR 1.47(a) in Response to Notice of Missing Parts and Extension of Time" filed 17 March 2011 to accept the application without the signature of joint inventor, Bernard Fillol, Philippe Gremillet, Jean-Marie Magain, and Frederic Weimann.

BACKGROUND

On 23 January 2008, applicants filed international application PCT/FR2008/000081 which claimed no priority date. The deadline for submission of the basic national fee was thirty months from the international filing date, i.e., 23 July 2010.

On 22 July 2010, applicants filed a Transmittal Letter for entry into the U.S. national stage accompanied by, among other materials, payment of the basic national fee.

On 19 August 2010, the United States Designated/Elected Office (DO/EO/US) mailed a Notification Of Missing Requirements (Form PCT/DO/EO/905) indicating that an oath or declaration acceptable under 37 CFR 1.497 and the surcharge for filing the oath or declaration later than thirty months after the international filing date were required.

On 17 March 2011, applicants filed a response to the Notification Of Missing Requirements. The response included payment of the required surcharge, a declaration executed one of the five named inventors, and the petition under 37 CFR 1.47(a) considered herein. The petition seeks acceptance of the application without the signature of the remaining inventors, Bernard Fillol, Philippe Gremillet, Jean-Marie Magain, and Frederic Weimann, whom applicants assert have refused to sign the application documents.

DISCUSSION

A grantable petition under 37 CFR 1.47(a) must be accompanied by: (1) the fee under 37 CFR 1.17; (2) a statement of the last known address of the nonsigning inventors; (3) an oath or declaration by the other inventors on behalf of the other inventors on behalf of themselves and the nonsigning inventors; and (4) factual proof that the inventors refuse to execute the application or cannot be reached after diligent effort.

Applicants here have submitted part of the appropriate petition fee. Item (1) is therefore satisfied.

Regarding item (2), applicants have provided the last known address of the nonsigning inventors (Bernard Fillol, Philippe Gremillet, Jean-Marie Magain, and Frederic Weimann). Accordingly, item (2) is therefore satisfied.

Regarding item (3), section 409.03(a) of the Manual of Patent Examining Practice (MPEP) states that:

> An oath or declaration signed by all the available joint inventors with the signature block of the nonsigning inventor(s) left blank may be treated as having been signed by all the joint inventors on behalf of the nonsigning inventor(s), unless otherwise indicated.

Here, applicants have filed a declaration executed by one of the five inventors and including an unsigned signature box identifying the nonsigning inventors. This declaration is treated as having been executed by the available inventors on their own behalf and on behalf of the nonsigning inventors. **However, the declaration for inventors is not in compliance with 37 CFR 1.69(b); specifically, applicants have not used one of the pre-approved foreign language forms nor have applicants furnished the requisite statement attesting to the accuracy of the translation. Therefore, item (3) has not been satisfied.**

Regarding item (4), the petition asserts that the nonsigning inventors have refused to execute the declaration. Before a refusal to execute the application can be claimed, section 409.03(d) of the MPEP requires that the nonsigning inventors provided with a copy of the complete application, including specification, drawings and claims. The MPEP also requires "a statement of facts by the person who presented the inventor with the application papers and/or to whom the refusal was made."

Here, the evidence submitted to demonstrate the joint inventors' (Bernard Fillol, Philippe Gremillet, Jean-Marie Magain, and Frederic Weimann) refusal to execute the application papers is contained in the "Declaration of Aurelie Baptiste" included in the petition, and the exhibits thereto. These materials provide the required firsthand statement regarding the delivery to the nonsigning inventors of a copy of the complete

application, and the nonsigning inventors' refusal to execute the application, with documentary evidence supporting the statement. Item (4) is therefore satisfied.

Based on the above, applicants have satisfied all the requirements for a grantable petition under 37 CFR 1.47(a).

CONCLUSION

The petition under 37 CFR 1.47(a) is DISMISSED without prejudice.

If reconsideration on the merits of this petition is desired, a proper response must be filed within TWO (2) MONTHS from the mail date of this decision. Any reconsideration request should include a cover letter entitled "Renewed Petition Under 37 CFR 1.47(a)." Applicants are required to file either (1) a pre-approved foreign language declaration in compliance with 37 CFR 1.497(a)-(b) or (2) the requisite statement under 37 CFR 1.69(b) that the translation is accurate. No additional petition fee is required.

Any further correspondence with respect to this matter may be filed electronically via EFS-Web selecting the document description "Petition for review and processing by the PCT Legal Office" or by mail addressed to Mail Stop PCT, Commissioner for Patents, Office of PCT Legal Administration, P.O. Box 1450, Alexandria, Virginia 22313-1450, with the contents of the letter marked to the attention of the Office of PCT Legal Administration.

Anthony Smith
Attorney-Advisor
Office PCT Legal Administration
Tel.: 571-272-3298
Facsimile: 571-273-0459

UNITED STATES PATENT AND TRADEMARK OFFICE

Commissioner for Patents
United States Patent and Trademark Office
P.O. Box 1450
Alexandria, VA 22313-1450
www.uspto.gov

Harness, Dickey & Pierce, P.L.C.
P.O. Box 828
Bloomfield Hills, MI 48303

MAILED
SEP 20 2011
PCT LEGAL ADMINISTRATION

In re Application of
FILLOL et al.
Application No.: 12/864,132
PCT No.: PCT/FR2008/000081
Int. Filing: 23 January 2008
Priority Date: None
Attorney Docket No.: 4384-000157/US/NP
For: DEVICE AND METHOD FOR THE SPACE-COLORIMETRIC MEASUREMENT OF A THREE-DIMENSIONAL OBJECT

DECISION ON PETITION
UNDER 37 CFR 1.47(a)

In a decision mailed by this Office on 15 June 2011, applicants' petition under 37 CFR 1.47(a) was dismissed without prejudice for failing to satisfy all the requirements of a grantable petition. Specifically, petitioner had not submitted an acceptable declaration executed by the cooperating inventors on their own behalf and on behalf of the non-signing inventors (the declaration of inventors was not in compliance with 37 CFR 1.69(b) since applicants had not used one of the pre-approved foreign language forms nor had applicants furnished the requisite statement attesting to the accuracy of the translation).

On 21 July 2011, petitioner filed the renewed petition considered herein. Petitioner has submitted a statement attesting to the accuracy of the previously filed declaration, filed 17 March 2011, satisfies 37 CFR 1.497(b) and 37 CFR 1.69(b). The petition under 37 CFR 1.47(a) is **GRANTED**.

The application is accepted without the signature of nonsigning inventors, Bernard Fillol, Philippe Gremillet, Jean-Marie Magain, and Frederic Weimann. A notice of the acceptance of the application will be published in the Official Gazette, and a letter informing the nonsigning inventor of the application will be forwarded to the inventor's last-known address, as set forth in the petition.

The application is being forwarded to the National Stage Processing Branch of the Office of PCT Operations for further processing.

Anthony Smith
Attorney-Advisor
Office PCT Legal Administration
Tel.: 571-272-3298

UNITED STATES PATENT AND TRADEMARK OFFICE

Commissioner for Patents
United States Patent and Trademark Office
P.O. Box 1450
Alexandria, VA 22313-1450
www.uspto.gov

MAILED
SEP 20 2011
PCT LEGAL ADMINISTRATION

Frederic Weimann
9 Route de Saint Leonard
Senlis, France F-60300

In re Application of
FILLOL et al.
Application No.: 12/864,132
PCT No.: PCT/FR2008/000081
Int. Filing: 23 January 2008
Priority Date: None
Attorney Docket No.: 4384-000157/US/NP
For: DEVICE AND METHOD FOR THE SPACE-COLORIMETRIC MEASUREMENT OF A THREE-DIMENSIONAL OBJECT

Dear Frederic Weimann:

You are named as an inventor in the above identified United States patent application, filed under the provisions of 37 CFR 1.47(a) and 35 U.S.C. 116. Should a patent be granted, you will be designated as a legal representative of the deceased inventor.

As a named inventor, you are entitled to inspect any paper in the file wrapper of the application, order copies of all or any part thereof (at a prepaid cost per 37 CFR 1.19) or to make your position of record in the application. Alternatively, you may arrange to do any of the preceding through a registered patent agent or attorney presenting written authorization from you. If you care to join in the application, counsel of record (see below) would presumably assist you. Joining in the application would entail the filing of an appropriate oath or declaration by you pursuant to 37 CFR 1.63.

Anthony Smith
Attorney-Advisor
Office of PCT Legal Administration
Telephone: (571) 272-3298
Facsimile: (571) 273-0459

Counsel of Record:
Harness, Dickey & Pierce, P.L.C.
P.O. Box 828
Bloomfield Hills, MI 48303

UNITED STATES PATENT AND TRADEMARK OFFICE

Commissioner for Patents
United States Patent and Trademark Office
P.O. Box 1450
Alexandria, VA 22313-1450
www.uspto.gov

Jean-Marie Magain
1 rue de Forges
Saint Leu, France F-60340

MAILED

SEP 20 2011

PCT LEGAL ADMINISTRATION

In re Application of
FILLOL et al.
Application No.: 12/864,132
PCT No.: PCT/FR2008/000081
Int. Filing: 23 January 2008
Priority Date: None
Attorney Docket No.: 4384-000157/US/NP
For: DEVICE AND METHOD FOR THE SPACE-COLORIMETRIC MEASUREMENT OF A THREE-DIMENSIONAL OBJECT

Dear Jean-Marie Magain:

You are named as an inventor in the above identified United States patent application, filed under the provisions of 37 CFR 1.47(a) and 35 U.S.C. 116. Should a patent be granted, you will be designated as a legal representative of the deceased inventor.

As a named inventor, you are entitled to inspect any paper in the file wrapper of the application, order copies of all or any part thereof (at a prepaid cost per 37 CFR 1.19) or to make your position of record in the application. Alternatively, you may arrange to do any of the preceding through a registered patent agent or attorney presenting written authorization from you. If you care to join in the application, counsel of record (see below) would presumably assist you. Joining in the application would entail the filing of an appropriate oath or declaration by you pursuant to 37 CFR 1.63.

Anthony Smith
Attorney-Advisor
Office of PCT Legal Administration
Telephone: (571) 272-3298
Facsimile: (571) 273-0459

Counsel of Record:
Harness, Dickey & Pierce, P.L.C.
P.O. Box 828
Bloomfield Hills, MI 48303

UNITED STATES PATENT AND TRADEMARK OFFICE

Commissioner for Patents
United States Patent and Trademark Office
P.O. Box 1450
Alexandria, VA 22313-1450
www.uspto.gov

Bernard Fillol
126 rue Montparnasse
Paris, France F-75014

MAILED
SEP 20 2011
PCT LEGAL ADMINISTRATION

In re Application of
FILLOL et al.
Application No.: 12/864,132
PCT No.: PCT/FR2008/000081
Int. Filing: 23 January 2008
Priority Date: None
Attorney Docket No.: 4384-000157/US/NP
For: DEVICE AND METHOD FOR THE SPACE-COLORIMETRIC MEASUREMENT OF A THREE-DIMENSIONAL OBJECT

Dear Bernard Fillol:

You are named as an inventor in the above identified United States patent application, filed under the provisions of 37 CFR 1.47(a) and 35 U.S.C. 116. Should a patent be granted, you will be designated as a legal representative of the deceased inventor.

As a named inventor, you are entitled to inspect any paper in the file wrapper of the application, order copies of all or any part thereof (at a prepaid cost per 37 CFR 1.19) or to make your position of record in the application. Alternatively, you may arrange to do any of the preceding through a registered patent agent or attorney presenting written authorization from you. If you care to join in the application, counsel of record (see below) would presumably assist you. Joining in the application would entail the filing of an appropriate oath or declaration by you pursuant to 37 CFR 1.63.

Anthony Smith
Attorney-Advisor
Office of PCT Legal Administration
Telephone: (571) 272-3298
Facsimile: (571) 273-0459

Counsel of Record:
Harness, Dickey & Pierce, P.L.C.
P.O. Box 828
Bloomfield Hills, MI 48303

UNITED STATES PATENT AND TRADEMARK OFFICE

Commissioner for Patents
United States Patent and Trademark Office
P.O. Box 1450
Alexandria, VA 22313-1450
www.uspto.gov

Phillippe Gremillet
15 Domaine de Geville
Soisy Suire Seine, France F-60340

MAILED
SEP 20 2011
PCT LEGAL ADMINISTRATION

In re Application of
FILLOL et al.
Application No.: 12/864,132
PCT No.: PCT/FR2008/000081
Int. Filing: 23 January 2008
Priority Date: None
Attorney Docket No.: 4384-000157/US/NP
For: DEVICE AND METHOD FOR THE SPACE-COLORIMETRIC MEASUREMENT OF A THREE-DIMENSIONAL OBJECT

Dear Phillippe Gremillet:

You are named as an inventor in the above identified United States patent application, filed under the provisions of 37 CFR 1.47(a) and 35 U.S.C. 116. Should a patent be granted, you will be designated as a legal representative of the deceased inventor.

As a named inventor, you are entitled to inspect any paper in the file wrapper of the application, order copies of all or any part thereof (at a prepaid cost per 37 CFR 1.19) or to make your position of record in the application. Alternatively, you may arrange to do any of the preceding through a registered patent agent or attorney presenting written authorization from you. If you care to join in the application, counsel of record (see below) would presumably assist you: Joining in the application would entail the filing of an appropriate oath or declaration by you pursuant to 37 CFR 1.63.

Anthony Smith
Attorney-Advisor
Office of PCT Legal Administration
Telephone: (571) 272-3298
Facsimile: (571) 273-0459

Counsel of Record:
Harness, Dickey & Pierce, P.L.C.
P.O. Box 828
Bloomfield Hills, MI 48303

UNITED STATES PATENT AND TRADEMARK OFFICE

UNITED STATES DEPARTMENT OF COMMERCE
United States Patent and Trademark Office
Address: COMMISSIONER FOR PATENTS
P.O. Box 1450
Alexandria, Virginia 22313-1450
www.uspto.gov

APPLICATION NO.	FILING DATE	FIRST NAMED INVENTOR	ATTORNEY DOCKET NO.	CONFIRMATION NO.
12/864,141	07/22/2010	Yasunobu Hirota	85721(305773)	2320

21874 7590 10/08/2010
EDWARDS ANGELL PALMER & DODGE LLP
P.O. BOX 55874
BOSTON, MA 02205

EXAMINER

ART UNIT	PAPER NUMBER
1795	

MAIL DATE	DELIVERY MODE
10/08/2010	PAPER

Please find below and/or attached an Office communication concerning this application or proceeding.

The time period for reply, if any, is set in the attached communication.

Best Available Copy

UNITED STATES PATENT AND TRADEMARK OFFICE

Commissioner for Patents
United States Patent and Trademark Office
P.O. Box 1450
Alexandria, VA 22313-1450
www.uspto.gov

OCT 8 2010

BC

In re application of Yasunobu Hirota et al. Serial No. 12/864,141 Filed: July 22, 2010 For: RESIN COMPOSITION FOR ELECTRO-PHOTOGRAPHIC TONERS AND ELECTRO-PHOTOGRAPHIC TONERS	: : : : : : :	DECISION ON REQUEST TO PARTICIPATE IN PATENT PROSECUTION HIGHWAY PROGRAM AND PETITION TO MAKE SPECIAL UNDER 37 CFR 1.102(a)

This is a decision on the request to participate in the Patent Prosecution Highway (PPH) program filed July 22, 2010.

The request and petition are **GRANTED**.

A grantable request to participate in the PPH program and petition to make special require:

(1) The U.S. application must validly claim priority under 35 U.S.C. 119(a) to one or more applications filed in the JPO, note where the JPO application with similar claims is not the same application from which the U.S. application claims priority that the applicant must identify the relationship between the JPO application with similar claims and the JPO priority application;

(2) Applicant must submit a copy of:

a. The allowable/patentable claim(s) from the JPO application(s) or if a copy of the allowable/patentable claims is available via the Dossier Access System (DAS) applicant may request the USPTO to obtain a copy from DAS; however, if the USPTO is unable to obtain a copy from the DAS, the applicant will be required to submit a copy;
b. An English translation of the allowable/ patentable claim(s), if applicable; and
c. A statement that the English translation is accurate, if applicable;

(3) Applicant must:

a. Ensure all the claims in the U.S. application must sufficiently correspond or be amended to sufficiently correspond to the allowable/patentable claim(s) in the JPO application(s); and
b. Submit a claims correspondence table in English;

(4) Examination of the U.S. application has not begun;

(5) Applicant must submit:

a. Documentation of prior office action:
   i. a copy of the office action(s) just prior to the "Decision to Grant a Patent" from each of the JPO application(s) containing the allowable/patentable claims(s) or
   ii. if the allowable/patentable claim(s) are from "Notification of Reasons for Refusal" then the Notification of Reasons for Refusal or
   iii. if the JPO application is a first action allowance then no office action from the JPO is necessary should be indicated on the request/petition form;
   Further, if a copy of the documents from a or b is available via the Dossier Access System (DAS), applicant may request the USPO obtain a copy from the DAS; however, if the USPTO is unable to obtain a copy of the DAS, the applicant will be required to submit a copy;
b. An English language translation of the JPO Office action from (5)(a)(i)-(ii) above if applicable; and
c. A statement that the English translation is accurate;

(6) Applicant must submit:
a. An IDS listing the documents cited by the JPO examiner in the JPO office action (unless already submitted in this application)
b. Copies of documents except U.S. patents or U.S. patent application publications (unless already submitted in this application); and

The request to participate in the PPH program and petition comply with the above requirements. Accordingly, the above-identified application has been accorded "special" status.

The application is being forwarded to the examiner for action on the merits commensurate with this decision.

Any inquiry regarding this decision should be directed to Blaine Copenheaver, Quality Assurance Specialist, at (571) 272-1156.

All other inquiries concerning the examination or status of the application is accessible in the PAIR system at http://www.uspto.gov/ebc/index.html.

/Blaine Copenheaver/

Blaine Copenheaver
Quality Assurance Specialist
Technology Center 1700

UNITED STATES PATENT AND TRADEMARK OFFICE

MAILED

AUG 20 2010

PCT LEGAL ADMININSTRATION

Commissioner for Patents
United States Patent and Trademark Office
P.O. Box 1450
Alexandria, VA 22313-1450
www.uspto.gov

BUCHANAN, INGERSOLL & ROONEY PC
POST OFFICE BOX 1404
ALEXANDRIA VA 22313-1404

In re Application of: MAMMANA, et al. :
U.S. Application No.: 12/864,144 :
PCT No.: PCT/BR2008/000391 :
International Filing Date: 15 December 2008 :
Priority Date: 14 December 2007 :
Attorney Docket No.: 1019017-000006 :
For: COMPUTERIZED SCHOOL DESK :

DECISION ON PETITION
(37 CFR 1.137(b))

The petition for revival under 37 CFR 1.137(b) filed 22 July 2010 in the above-captioned application is hereby **GRANTED** as follows:

International application PCT/BR2008/000391 became abandoned with respect to the United States at midnight on 14 June 2010 based on applicants' failure to request entry into the national stage in the United States and submit payment of the basic national fee prior to the expiration of thirty months from the priority date.

The present petition for revival was accompanied by payment of the required petition fee, as well as the "required reply" in the form of a request for entry into the national stage in the United States and payment of the small entity basic national fee. The petition also includes a statement that "the entire delay in filing this application from the due date for filing the application until the filing of a grantable petition under 37 CFR 1.137(b) was unintentional," satisfying the requirement of 37 CFR 1.137(b)(3). Based on the above, the requirements of 37 CFR 1.137(b) have been satisfied. Accordingly, the request to revive the international application with respect to the United States is appropriately granted.

It is noted that the present petition was accompanied by an executed declaration in compliance with 37 CFR 1.497. Deposit Account No. 02-4800 will be charged the $65 small entity surcharge for filing the declaration later than thirty months after the priority date.

This application is being referred to the National Stage Processing Branch of the Office of PCT Operations for further processing in accordance with this decision. The date under 35 U.S.C. 371(c)(1), (c)(2), and (c)(4) is 22 July 2010.

Richard M. Ross
Attorney Advisor
Office of PCT Legal Administration
Telephone: (571) 272-3296

UNITED STATES PATENT AND TRADEMARK OFFICE

UNITED STATES DEPARTMENT OF COMMERCE
United States Patent and Trademark Office
Address: COMMISSIONER FOR PATENTS
P.O. Box 1450
Alexandria, Virginia 22313-1450
www.uspto.gov

APPLICATION NO.	FILING DATE	FIRST NAMED INVENTOR	ATTORNEY DOCKET NO.	CONFIRMATION NO.
12/864,147	07/22/2010	Tetsuhiko Yoshida	TESHP121US	2340

23623 7590 07/20/2011
TUROCY & WATSON, LLP
127 Public Square
57th Floor, Key Tower
CLEVELAND, OH 44114

EXAMINER
NIEBAUER, RONALD T

ART UNIT	PAPER NUMBER
1654	

NOTIFICATION DATE	DELIVERY MODE
07/20/2011	ELECTRONIC

Please find below and/or attached an Office communication concerning this application or proceeding.

The time period for reply, if any, is set in the attached communication.

Notice of the Office communication was sent electronically on above-indicated "Notification Date" to the following e-mail address(es):

docket1@thepatentattorneys.com
hholmes@thepatentattorneys.com
swati@thepatentattorneys.com

UNITED STATES PATENT AND TRADEMARK OFFICE

Commissioner for Patents
United States Patent and Trademark Office
P.O. Box 1450
Alexandria, VA 22313-1450
www.uspto.gov

JUL 20 2011

TUROCY & WATSON, LLP
127 Public Square
57th Floor, Key Tower
CLEVELAND, OH 44114

In re Application of	:	DECISION ON REQUEST TO
YOSHIDA ET AL.	:	PARTICIPATE IN PATENT
Application No. 12/864,147	:	PROSECUTION HIGHWAY
Filed: July 22, 2010	:	PROGRAM AND PETITION
Attorney Docket No. TESHP121US	:	TO MAKE SPECIAL UNDER
	:	37 CFR 1.102(a)

This is a decision on the request to participate in the Patent Prosecution Highway (PPH) program and the petition under 37 CFR 1.102(a), filed May 2, 2011, to make the above-identified application special.

The request and petition are **GRANTED**.

A grantable request to participate in the PPH program and petition to make special require:

(1) The U.S. application is (a) a Paris Convention application which either (i) validly claims priority under 35 U.S.C. 119(a) and 37 CFR 1.55 to one or more applications filed in the JPO, or (ii) validly claims priority to a PCT application that contains no priority claims, or (b) a national stage application under the PCT (an application which entered the national stage in the U.S. from a PCT international application after compliance with 35 U.S.C. 371), which PCT application (i) validly claims priority to an application filed in the JPO, or (ii) validly claims priority to a PCT application that contains no priority claims, or (iii) contains no priority claim, or (c) a so-called bypass application filed under 35 U.S.C. 111(a) which validly claims benefit under 35 U.S.C. 120 to a PCT application, which PCT application (i) validly claims priority to an application filed in the JPO, or (ii) validly claims priority to a PCT application that contains no priority claims, or (iii) contains no priority claim;
(2) The JPO application(s) have at least one claim that was determined by the JPO to be allowable/patentable;
(3) All the claims in each U.S. application for which a request for participation in the PPH program is made must sufficiently correspond or be amended to sufficiently correspond to the allowable/patentable claims in the JPO application(s);
(4) Examination of the U.S. application has not begun;
(5) Applicant must submit a copy of the Office action from the JPO application just prior to the "Decision to Grant a Patent" (e.g., the latest "Notification of Reasons for Refusal") from each of the JPO application(s) containing the allowable/patentable claims that are the basis for the request, along with an English translation thereof and a statement that the English translation is accurate;

(6) Applicant must submit a copy of the allowable/patentable claims from the JPO application(s) along with an English translation thereof and a statement that the English translation is accurate;
(7) Applicant must submit a claim correspondence table in English; and
(8) Applicant must submit an information disclosure statement (IDS) listing the documents cited by the JPO examiner in the JPO office action (unless such an IDS has already been filed in the U.S. application).

The request to participate in the PPH program and petition comply with the above requirements. Accordingly, the above-identified application has been accorded "special" status.

Telephone inquiries concerning this decision should be directed to Cecilia Tsang at 571-272-0562.

All other inquiries concerning the examination or status of the application should be directed to Patent Application Information Retrieval (PAIR) system at the http://www.uspto.gov/ebc/index.html.

The application is being forwarded to the examiner for action on the merits commensurate with this decision.

Cecilia Tsang
Supervisory Patent Examiner
TC 1600

MAILED

OCT 12 2010

PCT LEGAL ADMINISTRATION

UNITED STATES PATENT AND TRADEMARK OFFICE

Commissioner for Patents
United States Patent and Trademark Office
P.O. Box 1450
Alexandria, VA 22313-1450
www.uspto.gov

COHEN, PONTANI, LIEBERMAN & PAVANE LLP
551 FIFTH AVENUE
SUITE 1210
NEW YORK NY 10176

In re Application of	:	
QIU et al.	:	
Application No.: 12/864,159	:	DECISION
Attorney's Docket No.: 5908-4PUS	:	
PCT No.: PCT/CN2009/074104	:	
Int. Filing Date: 22 September 2009	:	
Priority Date: 30 September 2008	:	
For: LOCKABLE CASTER WHEELS	:	

This decision is in response to applicants' petition under 37 CFR 1.182 filed 27 September 2010.

BACKGROUND

On 22 July 2010, applicants filed national stage papers in the United States Designated/Elected Office (DO/EO/US) electronically via EFS-Web. The submission included, *inter alia*, a Transmittal Letter and preliminary amendment. The international application number keyed into EFS-Web was PCT/CN09/74101. However, the number appearing on the Transmittal Letter and in the preliminary amendment is is PCT/CN2009/074104.

On 07 September 2010, a Notification was issued indicating that a petition under 37 CFR 1.182, including the petition fee set forth in 37 CFR 1.17(f), to correct the above-stated error regarding the international application number was required.

On 27 September 2010, applicants submitted the instant petition under 37 CFR 1.182.

DISCUSSION

The petition fee has been paid. A review of the application file including counsel's statements in the instant submission reveals that the present application should in fact be the national stage application of international application **PCT/CN2009/074104**.

CONCLUSION

For the reasons set forth above, the petition under 37 CFR 1.182 is **GRANTED**.

This application is being forwarded to the National Stage Processing Branch of the Office of PCT Operations to continue national stage processing of the application.

/Daniel Stemmer/

Daniel Stemmer
Legal Examiner
PCT Legal Affairs
Office of Patent Cooperation Treaty
Legal Administration
Telephone: (571) 272-3301

UNITED STATES PATENT AND TRADEMARK OFFICE

UNITED STATES DEPARTMENT OF COMMERCE
United States Patent and Trademark Office
Address: COMMISSIONER FOR PATENTS
P.O. Box 1450
Alexandria, Virginia 22313-1450
www.uspto.gov

APPLICATION NO.	FILING DATE	FIRST NAMED INVENTOR	ATTORNEY DOCKET NO.	CONFIRMATION NO.
12/864,173	07/22/2010	Graham Warner	92956-789608 (000100US)	2571

20350 7590 11/03/2011
KILPATRICK TOWNSEND & STOCKTON LLP
TWO EMBARCADERO CENTER
EIGHTH FLOOR
SAN FRANCISCO, CA 94111-3834

EXAMINER
DEUBLE, MARK A

ART UNIT	PAPER NUMBER
3651	

NOTIFICATION DATE	DELIVERY MODE
11/03/2011	ELECTRONIC

Please find below and/or attached an Office communication concerning this application or proceeding.

The time period for reply, if any, is set in the attached communication.

Notice of the Office communication was sent electronically on above-indicated "Notification Date" to the following e-mail address(es):

Docket@kilpatricktownsend.com
ipefiling@kilpatricktownsend.com
jlhice@kilpatrick.foundationip.com

UNITED STATES PATENT AND TRADEMARK OFFICE

Commissioner for Patents
United States Patent and Trademark Office
P.O. Box 1450
Alexandria, VA 22313-1450
www.uspto.gov

NOV 2 2011

KILPATRICK TOWNSEND & STOCKTON LLP
TWO EMBARCADERO CENTER
EIGHTH FLOOR
SAN FRANCISCO CA 94111-3834

In re application of	:	**DECISION ON REQUEST TO**
Warner Graham	:	**PARTICIPATE IN PATENT**
Application No. 12/864,173	:	**PROSECUTION HIGHWAY**
Filed: July 22, 2010	:	**PROGRAM AND PETITION**
For: METHOD AND APPARATUS	:	**TO MAKE SPECIAL UNDER**
FOR MONITORING A	:	**37 CFR 1.102(a)**
CONVEYOR BELT		

This is a decision on the renewed request to participate in the Patent Prosecution Highway (PPH) program and the petition under 37 CFR 1.102(a), filed August 10, 2011, to make the above-identified application special.

The request and petition are **GRANTED**.

A grantable request to participate in the PPH program and petition to make special require:

(1) The U.S. application must validly claim priority under 35 U.S.C. 119(a) to one or more applications filed in the IPAU, USPTO;
(2) Applicant must submit a copy of the allowable/patentable claim(s) from the IPAU application(s) along with an English translation thereof and a statement that the English translation is accurate;
(3) All the claims in the U.S. application must sufficiently correspond or be amended to sufficiently correspond to the allowable/patentable claim(s) in the IPAU application(s);
(4) Examination of the U.S. application has not begun;
(5) Applicant must submit a copy of the latest Office action from each of the IPAU application(s) containing the allowable/patentable claim(s) along with an English translation thereof and a statement that the English translation is accurate;
(6) Applicant must submit an IDS listing the documents cited by the IPAU examiner in the IPAU Office action along with copies of documents except U.S. patents or U.S. patent application publications.

In light of the petition being properly submitted via EFS-Web as is required, the request to participate in the PPH pilot program complies with the above requirements. Therefore, the above-identified application has been accorded "special" status.

All other inquiries concerning the examination or status of the application should be directed to the Patent Application Information Retrieval (PAIR) system.

The application is being forwarded to the examiner for action on the merits commensurate with this decision.

Any inquiry regarding this decision should be directed to Mikado Buiz, Quality Assurance Specialist, at (571) 272-6578.

/ Mikado Buiz /

Mikado Buiz,
Quality Assurance Specialist
Technology Center 3600

MB/MB: 11/1/11

UNITED STATES PATENT AND TRADEMARK OFFICE

Commissioner for Patents
United States Patent and Trademark Office
P.O. Box 1450
Alexandria, VA 22313-1450
www.uspto.gov

K&L GATES LLP
PO BOX 1135
CHICAGO IL 60690

MAILED

MAR 31 2011

OFFICE OF PETITIONS

In re Application of	:	
Bontemps, et al.	:	
Application No. 12/864,175	:	DECISION ACCORDING STATUS
Filed: October 27, 2010	:	UNDER 37 CFR 1.47(a)
Attorney Docket No. 2008-026	:	
	:	

This is in response to petition under 37 CFR 1.47(b), filed February 7, 2011, which is properly treated as a petition under 37 CFR 1.47(a).

The petition under 37 CFR 1.47(a) is **GRANTED**.

Rule 47 applicant has established that inventor Faulon has refused to sign the declaration after having been presented with the application papers. Specifically, applicant has included a copy of a written refusal from Faulon.

While Rule 47 applicant did not provide a statement of a single last known address of Fisher, it is presumed to be the address listed on the declaration. Applicant should inform the Office if this is not correct.

The above-identified application and papers have been reviewed and found to be in compliance with 37 CFR 1.47(a). Accordingly, the above-identified application is hereby accorded Rule 1.47(a) status.

As provided in 37 CFR 1.47(c), this Office will forward notice of this application's filing to the non-signing inventor at the last known address provided in the petition. Notice of the filing of this application will also be published in the Official Gazette.

The application is being forwarded to Group Art Unit 1782 for docketing and examination in due course.

Telephone inquiries regarding this decision should be directed to the undersigned at (571)272-3207.

Cliff Congo
Petitions Attorney
Office of Petitions

UNITED STATES PATENT AND TRADEMARK OFFICE

Commissioner for Patents
United States Patent and Trademark Office
P.O. Box 1450
Alexandria, VA 22313-1450
www.uspto.gov

LOLC FAULON
PAPPELSTRASSE 7
SINGEN-BEUREN
GERMANY
D-78224

MAILED

MAR 31 2011

OFFICE OF PETITIONS

In re Application of
Bontemps, et al.
Application No. 12/864,175
Filed: July 22, 2010
Title: Packaging Comprising a Heat Shrinking Film

LETTER

Dear Mr. Faulon:

You are named as a joint inventor in the above-identified United States patent application filed under the provisions of 35 USC 116 (United States Code) and 37 CFR 1.47(a), Rules of Practice in Patent Cases. Should a patent be granted on the application you will be designated therein as a joint inventor.

As a joint inventor, you are entitled to inspect any paper in the file wrapper of the application, order copies of all or any part thereof (at a prepaid cost per 37 CFR 1.19) or make your position of record in the application. Alternatively, you may arrange to do any of the preceding through a registered patent attorney or agent presenting written authorization from you. If you care to join the application, agent of record would presumably assist you. Joining in the application would entail the filing of an appropriate oath or declaration by you pursuant to 37 CFR 1.63.

Telephone inquiries regarding this communication should be directed to Petitions Attorney Cliff Congo at (571)272-3207. Requests for information regarding your application should be directed to the File Information Unit at (703) 308-2733. Information regarding how to pay for and order a copy of the application, or a specific paper in the application, should be directed to the Certification Division at (703) 308-9726 or 1-800-972-6382 (outside the Washington D.C. area).

Cliff Congo
Petitions Attorney
Office of Petitions

CERTIFICATE OF ELECTRONIC TRANSMISSION
I hereby certify that this correspondence is being electronically transmitted to United States Patent and Trademark Office on 17 November 2010.
/Kathryn Marley/
Kathryn Marley

IN THE UNITED STATES PATENT AND TRADEMARK OFFICE

In re Application of Inventor: **Osamu Okada *et al.***	Group Art Unit: **Not Assigned**
Application No.: **12/864,232**	Examiner: **Not Assigned**
Confirmation No. **3214**	
Int'l Filing Date: **22 January 2009**	**Customer No. 22470**
Title: **CO_2-Facilitated Transport Membrane and Method for Producing the Same**	

MAIL STOP PETITIONS
Commissioner for Patents
P.O. Box 1450
Alexandria, VA 22313-1450

REQUEST FOR PARTICIPATION IN THE PATENT COOPERATION TREATY - PATENT PROSECUTION HIGHWAY (PCT-PPH) PILOT PROGRAM BETWEEN THE JAPAN PATENT OFFICE (JPO) AND THE USPTO

Sir:

Applicant hereby requests participation in the PCT-PPH Program and Petitions to Make the above-identified application special under the PCT-PPH program.

The above-identified application is a national stage entry of corresponding PCT application number PCT/JP2009/051000, filed on 22 January 2009.

List of Required Documents

(a) A copy of the latest international work product (WO/ISA, WO/IPEA, or IPER) in the above-identified corresponding PCT application is not attached because the document (the International Preliminary Examination Report) is already in the U.S. application.

(b) A copy of all claims which were indicated as having novelty, inventive step and industrial applicability in the above-identified corresponding PCT application is not attached because the an English language translation of the claims as amended in the above-identified

corresponding PCT application under Article 34 was already filed in the U.S. application on 22 July 2010.

A statement that the English translation is accurate is not required for this document (b) ("a copy of all claims which were indicated as having novelty, inventive step and industrial applicability") since the statement is only required if the documents were not "...already filed in the U.S. application for which participated in the PCT-PPH pilot program is requested...." pursuant to the "Patent Prosecution High Pilot Program between the United States Patent and Trademark Office and the Japan Patent Office based on Patent Cooperation Treaty Work Products" (1351 OG 209, 23 Feb 2010, page 7, paragraph 7)). An English language translation of the claims as amended in the above-identified corresponding PCT application under Article 34 was filed in the U.S. application on 22 July 2010.

An information disclosure statement listing the documents cited in the international work products of the corresponding PCT application has already been filed in the above-identified U.S. application on 22 July 2010, and copies of all cited documents (except for U.S. patents or U.S. patent application publications) have already been filed in the above-identified U.S. application on 22 July 2010.

///

CLAIMS CORRESPONDENCE TABLE:

Claims in US Application	Patentable Claims in the corresponding PCT Application	Explanation regarding the correspondence
1	1	Same except translated from Japanese to English, and amended for clarity
2	2	Same except translated from Japanese to English
3	3	Same except translated from Japanese to English
4	4	Same except translated from Japanese to English, and amended for clarity
5	5	Same except translated from Japanese to English
6,18	6	Same except translated and multiple dependencies removed
7,19	7	Same except translated and multiple dependencies removed
8,20	8	Same except translated and multiple dependencies removed
9,21	9	Same except translated and multiple dependencies removed
10,17,22,23	10	Same except translated and multiple dependencies removed
11	11	Same except translated from Japanese to English, and amended for claim style
12	12	Same except translated from Japanese to English, and amended for claim style
13,24	13	Same except translated and multiple dependencies removed
14,25	14	Same except translated and multiple dependencies removed
15	15	Same except translated from Japanese to English
16	16	Same except translated from Japanese to English

All the claims in the US application sufficiently correspond to the patentable claims in the corresponding PCT application.

CONCLUSION

Accordingly, Applicant petitions to make the above-identified application special on the basis of participation in the PCT-PPH Pilot Program Between the JPO and the USPTO.

In accordance with 75 Fed. Reg. 29,312 (May 25, 2010), the petition fee is waived.

The Commissioner is hereby authorized to charge any fee determined to be due in connection with this communication, or credit any overpayment, to our Deposit Account No. 50-0869 (RERC 1000-1).

Respectfully submitted,

Dated: 17 November 2010

/Mark A. Haynes/

Mark A. Haynes, Reg. No. 30,846

HAYNES BEFFEL & WOLFELD LLP
P.O. Box 366
Half Moon Bay, CA 94019
(650) 712-0340 phone
(650) 712-0263 fax

UNITED STATES PATENT AND TRADEMARK OFFICE

UNITED STATES DEPARTMENT OF COMMERCE
United States Patent and Trademark Office
Address: COMMISSIONER FOR PATENTS
P.O. Box 1450
Alexandria, Virginia 22313-1450
www.uspto.gov

APPLICATION NO.	FILING DATE	FIRST NAMED INVENTOR	ATTORNEY DOCKET NO.	CONFIRMATION NO.
12/864,232	09/13/2010	Osamu Okada	RERC 1000-1	3214

22470 7590 02/18/2011
HAYNES BEFFEL & WOLFELD LLP
P O BOX 366
HALF MOON BAY, CA 94019

EXAMINER

ART UNIT	PAPER NUMBER
1776	

MAIL DATE	DELIVERY MODE
02/18/2011	PAPER

Please find below and/or attached an Office communication concerning this application or proceeding.

The time period for reply, if any, is set in the attached communication.

UNITED STATES PATENT AND TRADEMARK OFFICE

Commissioner for Patents
United States Patent and Trademark Office
P.O. Box 1450
Alexandria, VA 22313-1450
www.uspto.gov

FEB 18 2011

CT

In re application of Osamu Okada et al Serial No. 12/864,232 Filed: September 13, 2010 For: CO2-FACILITATED TRANSPORT MEMBRANE AND METHOD FOR PRODUCING THE SAME	: : : : : : :	DECISION ON REQUEST TO PARTICIPATE IN PATENT PROSECUTION HIGHWAY PROGRAM AND PETITION TO MAKE SPECIAL UNDER 37 CFR 1.102(a)

This is a decision on the request to participate in the PCT Patent Prosecution Highway (PCT-PPH) pilot program and the petition under 37 CFR 1.102(a), filed November 18, 2010, to make the above-identified application special.

The request and petition are **GRANTED**.

A grantable request to participate in the PCT-PPH pilot program and petition to make special require:

(1) The U.S. application must disclose an eligible relationship to one or more PCT applications where the ISA or IPEA are the JPO, EPO, USPTO or KIPO;

(2) At least one claim in the PCT application has novelty, inventive step, and industrial applicability and must be free of any observations in Box VIII in the latest work product in the international stage or applicant must identify and explain why the claim(s) is/are not subject to the observation in Box VIII;

(3) Applicant must submit a copy of the claim(s) from the PCT application(s) that have novelty, inventive step, and industrial applicability along with an English translation thereof and a statement that the English translation is accurate, if the claims are not in the English language;

(4) Applicant must submit a claims correspondence table in English and all the independent claims in the U.S. application must sufficiently correspond or be amended to sufficiently correspond to the claim(s) that have novelty, inventive step, and industrial applicability in the PCT application(s);

(5) Examination of the U.S. application has not begun;

(6) Applicant must submit a copy of the latest international work product from the PCT application indicating that the claim(s) have novelty, inventive step, and industrial applicability along with an English translation thereof if the latest international work product is not in the English language; and

(7) Applicant must submit an IDS listing the documents cited by the PCT examiner in the international work product along with copies of documents except U.S. patents or U.S. patent application publications.

The request to participate in the PPH program and petition comply with the above requirements. Accordingly, the above-identified application has been accorded "special" status.

The application is being forwarded to the examiner for action on the merits commensurate with this decision.

Any inquiry regarding this decision should be directed to Christine Tierney, Quality Assurance Specialist, at (571) 272-1055.

All other inquiries concerning the examination or status of the application is accessible in the PAIR system at http://www.uspto.gov/ebc/index.html.

/Christine Tierney/

Christine Tierney
Quality Assurance Specialist
Technology Center 1700

United States Patent and Trademark Office

Commissioner for Patents
United States Patent and Trademark Office
P.O. Box 1450
Alexandria, VA 22313-1450
www.uspto.gov

PHILIPS INTELLECTUAL PROPERTY & STANDARDS
P. O. Box 3001
BRIARCLIFF MANOR NY 10510

In re Application of	:	
Salomon et al.	:	
Application No.: 12/864,246	:	DECISION
PCT No.: PCT/IB2008/054501	:	
Int. Filing Date: 29 October 2008	:	ON
Priority Date: 09 November 2007	:	
Attorney Docket No.: 009519US3	:	PETITION
For: Apparatus And Method For	:	
Generation Of Attenuation Map	:	

The petition to revive under 37 CFR 1.137(b) filed on 23 July 2010 in the above-captioned application is hereby **GRANTED** as follows:

Petitioner states that "the entire delay in filing the required reply from the due date for the required reply until the filing of a grantable petition under 37 CFR 1.137(b) was unintentional." Said statement is being accepted in satisfaction of 37 CFR 1.137(b)(3).

A review of the application file reveals that applicant has paid the petition fee. The required reply has been filed. No terminal disclaimer is required. Therefore, the request to revive the application abandoned under 35 U.S.C. 371(d) is granted as to the national stage in the United States of America.

The $130.00 surcharge under 37 CFR 1.492(h) is being charged to Deposit Account No. 14-1270.

This application is being returned to the Office of Patent Application Processing for further processing. Its date under 35 U.S.C. 371(c)(1), (2) and (4) is **23 July 2010**.

/George Dombroske/
George Dombroske
PCT Legal Examiner
Office of PCT Legal Administration
Tel: (571) 272-3283

PTO/SB/20PCT-JP (05-10)
Approved for use through 01/31/2012. OMB 0651-0058
U.S. Patent and Trademark Office; U.S. DEPARTMENT OF COMMERCE

Under the Paperwork Reduction Act of 1995, no persons are required to respond to a collection of information unless it displays a valid OMB control number.

REQUEST FOR PARTICIPATION IN THE PATENT COOPERATION TREATY - PATENT PROSECUTION HIGHWAY (PCT-PPH) PILOT PROGRAM BETWEEN THE JAPAN PATENT OFFICE (JPO) AND THE USPTO

Application No.:	12/864,255	Filing Date:	July 23, 2010
First Named Inventor:	Tatsuo ABE et al.		
Attorney Docket No.:	146221		
Title of the Invention:	ULTRASONIC CLEANING APPARATUS AND ULTRASONIC CLEANING METHOD		

THIS REQUEST FOR PARTICIPATION IN THE PCT-PPH PILOT PROGRAM ALONG WITH THE REQUIRED DOCUMENTS MUST BE SUBMITTED VIA EFS-WEB. INFORMATION REGARDING EFS-WEB IS AVAILABLE AT HTTP://WWW.USPTO.GOV/EBC/EFS_HELP.HTML.

APPLICANT HEREBY REQUESTS PARTICIPATION IN THE PCT-PPH PROGRAM AND PETITIONS TO MAKE THE ABOVE-IDENTIFIED APPLICATION SPECIAL UNDER THE PCT-PPH PROGRAM.

The above-identified application is (1) a national stage entry of the corresponding PCT application, or (2) a national stage entry of another PCT application which claims priority to the corresponding PCT application, or (3) a national application that claims domestic/ foreign priority to the corresponding PCT application, or (4) a national application which forms the basis for the priority claim in the corresponding PCT application, or (5) a continuing application of a U.S. application that satisfies one of (1) to (4) above, or (6) a U.S. application that claims domestic benefit to a U.S. provisional application which forms the basis for the priority claim in the corresponding PCT application.

The corresponding PCT application number(s) is/are: PCT/JP2009/000248

The international date of the corresponding PCT application(s) is/are: January 23, 2009

I. **List of Required Documents:**

a. **A copy of the latest international work product (WO/ISA, WO/IPEA, or IPER) in the above–identified corresponding PCT application(s)**

☒ Is attached.

☐ Is not attached because the document is already in the U.S. application.

b. **A copy of all claims which were indicated as having novelty, inventive step and industrial applicability in the above-identified corresponding PCT application(s).**

☒ Is attached.

☐ Is not attached because the document is already in the U.S. application.

c. **English translations of the documents in a. and b. above are attached (if the documents are not in the English language). A statement that the English translation is accurate is attached for the document in b. above.**

This collection of information is required by 35 U.S.C. 119, 37 CFR 1.55, and 37 CFR 1.102(d). The information is required to obtain or retain a benefit by the public, which is to file (and by the USPTO to process) an application. Confidentiality is governed by 35 U.S.C. 122 and 37 CFR 1.11 and 1.14. This collection is estimated to take 2 hours to complete, including gathering, preparing, and submitting the completed application form to the USPTO. Time will vary depending upon the individual case. Any comments on the amount of time you require to complete this form and/or suggestions for reducing this burden should be sent to the Chief Information Officer, U.S. Patent and Trademark Office, U.S. Department of Commerce, P.O. Box 1450, Alexandria, VA 22313-1450. DO NOT SEND FEES OR COMPLETED FORMS TO THIS ADDRESS.

Under the Paperwork Reduction Act of 1995, no persons are required to respond to a collection of information unless it displays a valid OMB control number.

REQUEST FOR PARTICIPATION IN THE PCT-PPH PILOT PROGRAM BETWEEN THE JPO AND THE USPTO

(continued)

Application No.:	12/864,255
First Named Inventor:	Tatsuo ABE et al.

d. **(1) An information disclosure statement listing the documents cited in the international work products (ISR, WO/ISA, WO/IPEA, IPER) of the corresponding PCT application.**

☐ Is attached.

☒ Has already been filed in the above-identified U.S. application on July 23, 2010

(2) Copies of all documents (except) for U.S. patents or U.S. patent application publications)

☐ Are attached.

☒ Have already been filed in the above-identified U.S. application on July 23, 2010. Note that Document 2 in the IPRP (JP-A 1998-229066) is the same as reference 7 (JP-A 10-229066) in the July 23, 2010 Information Disclosure Statement.

II. Claims Correspondence Table:

Claims in US Application	Patentable Claims in the corresponding PCT Application	Explanation regarding the correspondence
1-6	1-6	Claims 1-6 of the U.S. application correspond identically to claims 1-6, respectively, of the PCT application indicated as having novelty, inventive step and industrial applicability in the PCT application.

III. All the claims in the US application sufficiently correspond to the patentable claims in the corresponding PCT application.

Signature		Date	February 18, 2011
Name (Print/Typed)	William P. Berridge	Registration Number	30,024
Name (Print/Typed)	Christopher W. Brown	Registration Number	38,025

OLIFF & BERRIDGE, PLC
P.O. Box 320850
Alexandria, Virginia 22320-4850
Telephone: (703) 836-6400

DEPOSIT ACCOUNT USE AUTHORIZATION
Please grant any extension necessary for entry of this filing; Charge any fee due to our Deposit Account No. 15-0461

Privacy Act Statement

The **Privacy Act of 1974 (P.L. 93-579)** requires that you be given certain information in connection with your submission of the attached form related to a patent application or patent. Accordingly, pursuant to the requirements of the Act, please be advised that: (1) the general authority for the collection of this information is 35 U.S.C. 2(b)(2); (2) furnishing of the information solicited is voluntary; and (3) the principal purpose for which the information is used by the U.S. Patent and Trademark Office is to process and/or examine your submission related to a patent application or patent. If you do not furnish the requested information, the U.S. Patent and Trademark Office may not be able to process and/or examine your submission, which may result in termination of proceedings or abandonment of the application or expiration of the patent.

The information provided by you in this form will be subject to the following routine uses:

1. The information on this form will be treated confidentially to the extent allowed under the Freedom of Information Act (5 U.S.C. 552) and the Privacy Act (5 U.S.C 552a). Records from this system of records may be disclosed to the Department of Justice to determine whether disclosure of these records is required by the Freedom of Information Act.
2. A record from this system of records may be disclosed, as a routine use, in the course of presenting evidence to a court, magistrate, or administrative tribunal, including disclosures to opposing counsel in the course of settlement negotiations.
3. A record in this system of records may be disclosed, as a routine use, to a Member of Congress submitting a request involving an individual, to whom the record pertains, when the individual has requested assistance from the Member with respect to the subject matter of the record.
4. A record in this system of records may be disclosed, as a routine use, to a contractor of the Agency having need for the information in order to perform a contract. Recipients of information shall be required to comply with the requirements of the Privacy Act of 1974, as amended, pursuant to 5 U.S.C. 552a(m).
5. A record related to an International Application filed under the Patent Cooperation Treaty in this system of records may be disclosed, as a routine use, to the International Bureau of the World Intellectual Property Organization, pursuant to the Patent Cooperation Treaty.
6. A record in this system of records may be disclosed, as a routine use, to another federal agency for purposes of National Security review (35 U.S.C. 181) and for review pursuant to the Atomic Energy Act (42 U.S.C. 218(c)).
7. A record from this system of records may be disclosed, as a routine use, to the Administrator, General Services, or his/her designee, during an inspection of records conducted by GSA as part of that agency's responsibility to recommend improvements in records management practices and programs, under authority of 44 U.S.C. 2904 and 2906. Such disclosure shall be made in accordance with the GSA regulations governing inspection of records for this purpose, and any other relevant (*i.e.*, GSA or Commerce) directive. Such disclosure shall not be used to make determinations about individuals.
8. A record from this system of records may be disclosed, as a routine use, to the public after either publication of the application pursuant to 35 U.S.C. 122(b) or issuance of a patent pursuant to 35 U.S.C. 151. Further, a record may be disclosed, subject to the limitations of 37 CFR 1.14, as a routine use, to the public if the record was filed in an application which became abandoned or in which the proceedings were terminated and which application is referenced by either a published application, an application open to public inspection or an issued patent.
9. A record from this system of records may be disclosed, as a routine use, to a Federal, State, or local law enforcement agency, if the USPTO becomes aware of a violation or potential violation of law or regulation.

PATENT COOPERATION TREATY

From the INTERNATIONAL BUREAU

PCT

NOTIFICATION CONCERNING TRANSMITTAL OF COPY OF INTERNATIONAL PRELIMINARY REPORT ON PATENTABILITY (CHAPTER I OF THE PATENT COOPERATION TREATY)

(PCT Rule 44bis.1(c))

To:

YOSHIMIYA, Mikio
1st Shitaya Bldg. 8F
6-11, Ueno 7-chome, Taito-ku
Tokyo 1100005
JAPON

Date of mailing *(day/month/year)* 10 September 2010 (10.09.2010)	
Applicant's or agent's file reference 07F00144WO	IMPORTANT NOTICE

International application No.	International filing date *(day/month/year)*	Priority date *(day/month/year)*
PCT/JP2009/000248	23 January 2009 (23.01.2009)	28 February 2008 (28.02.2008)

Applicant: Shin-Etsu Handotai Co., Ltd. et al

The International Bureau transmits herewith a copy of the international preliminary report on patentability (Chapter I of the Patent Cooperation Treaty)

The International Bureau of WIPO 34, chemin des Colombettes 1211 Geneva 20, Switzerland Facsimile No. +41 22 338 82 70	Authorized officer Gijsbertus Beijer e-mail: pt07.pct@wipo.int

PATENT COOPERATION TREATY

PCT

INTERNATIONAL PRELIMINARY REPORT ON PATENTABILITY

(Chapter I of the Patent Cooperation Treaty)

(PCT Rule 44*bis*)

Applicant's or agent's file reference 07F00144WO	FOR FURTHER ACTION	See item 4 below
International application No. PCT/JP2009/000248	International filing date *(day/month/year)* 23 January 2009 (23.01.2009)	Priority date *(day/month/year)* 28 February 2008 (28.02.2008)
International Patent Classification (8th edition unless older edition indicated) See relevant information in Form PCT/ISA/237		
Applicant Shin-Etsu Handotai Co., Ltd.		

1. This international preliminary report on patentability (Chapter I) is issued by the International Bureau on behalf of the International Searching Authority under Rule 44 *bis*.1(a).

2. This REPORT consists of a total of 4 sheets, including this cover sheet.

   In the attached sheets, any reference to the written opinion of the International Searching Authority should be read as a reference to the international preliminary report on patentability (Chapter I) instead.

3. This report contains indications relating to the following items:

☒	Box No. I	Basis of the report
☐	Box No. II	Priority
☐	Box No. III	Non-establishment of opinion with regard to novelty, inventive step and industrial applicability
☐	Box No. IV	Lack of unity of invention
☒	Box No. V	Reasoned statement under Article 35(2) with regard to novelty, inventive step or industrial applicability; citations and explanations supporting such statement
☐	Box No. VI	Certain documents cited
☐	Box No. VII	Certain defects in the international application
☐	Box No. VIII	Certain observations on the international application

4. The International Bureau will communicate this report to designated Offices in accordance with Rules 44*bis*.3(c) and 93*bis*.1 but not, except where the applicant makes an express request under Article 23(2), before the expiration of 30 months from the priority date (Rule 44*bis*.2).

	Date of issuance of this report 31 August 2010 (31.08.2010)
The International Bureau of WIPO 34, chemin des Colombettes 1211 Geneva 20, Switzerland Facsimile No. +41 22 338 82 70	Authorized officer Gijsbertus Beijer e-mail: pt07.pct@wipo.int

特許協力条約

発信人　日本国特許庁（国際調査機関）

代理人
好宮幹夫
様

あて名
〒110-0005
日本国東京都台東区上野７丁目６番１１号第一下谷ビル８Ｆ

ＰＣＴ
国際調査機関の見解書
（法施行規則第40条の2）
〔ＰＣＴ規則43の2.1〕

発送日（日.月.年）	03. 03. 2009
出願人又は代理人の書類記号	07F00144PO
	今後の手続きについては、下記２を参照すること。
国際出願番号 ＰＣＴ／ＪＰ２００９／０００２４８	国際出願日（日.月.年） 23. 01. 2009
	優先日（日.月.年） 28. 02. 2008
国際特許分類（ＩＰＣ） Int.Cl. B06B3/12(2006.01)i, H01L21/304(2006.01)i	
出願人（氏名又は名称） 信越半導体株式会社	

１．この見解書は次の内容を含む。

- [x] 第Ｉ欄　見解の基礎
- [ ] 第Ⅱ欄　優先権
- [ ] 第Ⅲ欄　新規性、進歩性又は産業上の利用可能性についての見解の不作成
- [ ] 第Ⅳ欄　発明の単一性の欠如
- [x] 第Ⅴ欄　ＰＣＴ規則43の2.1(a)(i)に規定する新規性、進歩性又は産業上の利用可能性についての見解、それを裏付けるための文献及び説明
- [ ] 第Ⅵ欄　ある種の引用文献
- [ ] 第Ⅶ欄　国際出願の不備
- [ ] 第Ⅷ欄　国際出願に対する意見

２．今後の手続き
国際予備審査の請求がされた場合は、出願人がこの国際調査機関とは異なる国際予備審査機関を選択し、かつ、その国際予備審査機関がＰＣＴ規則66.1の2(b)の規定に基づいて国際調査機関の見解書を国際予備審査機関の見解書とみなさない旨を国際事務局に通知していた場合を除いて、この見解書は国際予備審査機関の最初の見解書とみなされる。

この見解書が上記のように国際予備審査機関の見解書とみなされる場合、様式ＰＣＴ／ＩＳＡ／２２０を送付した日から３月又は優先日から２２月のうちいずれか遅く満了する期限が経過するまでに、出願人は国際予備審査機関に、適当な場合は補正書とともに、答弁書を提出することができる。

さらなる選択肢は、様式ＰＣＴ／ＩＳＡ／２２０を参照すること。

３．さらなる詳細は、様式ＰＣＴ／ＩＳＡ／２２０の備考を参照すること。

見解書を作成した日 20. 02. 2009	
名称及びあて先 日本国特許庁（ＩＳＡ／ＪＰ） 郵便番号１００－８９１５ 東京都千代田区霞が関三丁目４番３号	特許庁審査官（権限のある職員）　３Ｋ　８９４０ 長谷井　雅昭 電話番号　０３－３５８１－１１０１　内線　３３３２

国際調査機関の見解書

国際出願番号 PCT／JP2009／000248

第Ⅰ欄　見解の基礎

1．言語に関し、この見解書は以下のものに基づき作成した。

☒ 出願時の言語による国際出願

☐ 出願時の言語から国際調査のための言語である _____ 語に翻訳された、この国際出願の翻訳文（PCT規則12.3(a)及び23.1(b)）

2．☐ この見解書は、PCT規則91の規定により国際調査機関が認めた又は国際調査機関に通知された明らかな誤りの訂正を考慮して作成した（PCT規則43の2.1(b)）。

3．この国際出願で開示されたヌクレオチド又はアミノ酸配列に関して、以下に基づき見解書を作成した。

a．タイプ　☐ 配列表

☐ 配列表に関連するテーブル

b．フォーマット　☐ 紙形式

☐ 電子形式

c．提出時期　☐ 出願時の国際出願に含まれていたもの

☐ この国際出願と共に電子形式により提出されたもの

☐ 出願後に、調査のために、この国際調査機関に提出されたもの

4．☐ さらに、配列表又は配列表に関連するテーブルを提出した場合に、出願後に提出した配列若しくは追加して提出した配列が出願時に提出した配列と同一である旨、又は、出願時の開示を超える事項を含まない旨の陳述書の提出があった。

5．補足意見：

国際調査機関の見解書

国際出願番号 PCT／JP2009／000248

第V欄　新規性、進歩性又は産業上の利用可能性についてのPCT規則43の2.1(a)(i)に定める見解、それを裏付ける文献及び説明

1.　見解

新規性（N）	請求の範囲	1－6	有
	請求の範囲		無
進歩性（IS）	請求の範囲	1－6	有
	請求の範囲		無
産業上の利用可能性（IA）	請求の範囲	1－6	有
	請求の範囲		無

2.　文献及び説明

文献１：JP 2001-13677 A（信越化学工業株式会社）2001.01.19,
【特許請求の範囲】、【００３１】、図１５（ファミリーなし）

文献２：JP 1998-229056 A（キャノン株式会社）1998.08.25,
【特許請求の範囲】、図１Ａ
& US 2002/0013065 A1
& US 2002/0002767 A1
& EP 856874 A2

文献３：JP 2007-5472 A（住友電気工業株式会社）2007.01.11,
【００４６】、図３
& US 2007/0014915 A1
& EP 1737026 A1

請求の範囲１～６に係る発明は、国際調査報告で引用されたいずれの文献にも記載されておらず当業者にとって自明なものでもない。

PATENT COOPERATION TREATY

PCT

INTERNATIONAL PRELIMINARY REPORT ON PATENTABILITY

(Chapter I of the Patent Cooperation Treaty)

(PCT Rule 44*bis*)

Applicant's or agent's file reference 07F00144WO	**FOR FURTHER ACTION**	See item 4 below
International application No. PCT/JP2009/000248	International filing date *(day/month/year)* 23 January 2009 (23.01.2009)	Priority date *(day/month/year)* 28 February 2008 (28.02.2008)
International Patent Classification (8th edition unless older edition indicated) See relevant information in Form PCT/ISA/237		
Applicant Shin-Etsu Handotai Co., Ltd.		

1. This international preliminary report on patentability (Chapter I) is issued by the International Bureau on behalf of the International Searching Authority under Rule 44 *bis*.1(a).

2. This REPORT consists of a total of 4 sheets, including this cover sheet.

   In the attached sheets, any reference to the written opinion of the International Searching Authority should be read as a reference to the international preliminary report on patentability (Chapter I) instead.

3. This report contains indications relating to the following items:

☒	Box No. I	Basis of the report
☐	Box No. II	Priority
☐	Box No. III	Non-establishment of opinion with regard to novelty, inventive step and industrial applicability
☐	Box No. IV	Lack of unity of invention
☒	Box No. V	Reasoned statement under Article 35(2) with regard to novelty, inventive step or industrial applicability; citations and explanations supporting such statement
☐	Box No. VI	Certain documents cited
☐	Box No. VII	Certain defects in the international application
☐	Box No. VIII	Certain observations on the international application

4. The International Bureau will communicate this report to designated Offices in accordance with Rules 44*bis*.3(c) and 93*bis*.1 but not, except where the applicant makes an express request under Article 23(2), before the expiration of 30 months from the priority date (Rule 44*bis* .2).

	Date of issuance of this report 12 October 2010 (12.10.2010)
The International Bureau of WIPO 34, chemin des Colombettes 1211 Geneva 20, Switzerland Facsimile No. +41 22 338 82 70	Authorized officer Gijsbertus Beijer e-mail: pt07.pct@wipo.int

PATENT COOPERATION TREATY

TRANSLATION

From the
INTERNATIONAL SEARCHING AUTHORITY

To:

PCT

WRITTEN OPINION OF THE
INTERNATIONAL SEARCHING AUTHORITY

(PCT Rule 43*bis*.1)

	Date of mailing *(day/month/year)*
Applicant's or agent's file reference 07F00144WO	**FOR FURTHER ACTION** See paragraph 2 below

International application No.	International filing date *(day/month/year)*	Priority date *(day/month/year)*
PCT/JP2009/000248	23.01.2009	28.02.2008

International Patent Classification (IPC) or both national classification and IPC

Applicant
Shin-Etsu Handotai Co., Ltd.

1. This opinion contains indications relating to the following items:

- [x] Box No. I — Basis of the opinion
- [ ] Box No. II — Priority
- [ ] Box No. III — Non-establishment of opinion with regard to novelty, inventive step and industrial applicability
- [ ] Box No. IV — Lack of unity of invention
- [x] Box No. V — Reasoned statement under Rule 43*bis*.1(a)(i) with regard to novelty, inventive step or industrial applicability; citations and explanations supporting such statement
- [ ] Box No. VI — Certain documents cited
- [ ] Box No. VII — Certain defects in the international application
- [ ] Box No. VIII — Certain observations on the international application

2. **FURTHER ACTION**

If a demand for international preliminary examination is made, this opinion will be considered to be a written opinion of the International Preliminary Examining Authority ("IPEA") except that this does not apply where the applicant chooses an Authority other than this one to be the IPEA and the chosen IPEA has notified the International Bureau under Rule 66.1*bis*(b) that written opinions of this International Searching Authority will not be so considered.

If this opinion is, as provided above, considered to be a written opinion of the IPEA, the applicant is invited to submit to the IPEA a written reply together, where appropriate, with amendments, before the expiration of 3 months from the date of mailing of Form PCT/ISA/220 or before the expiration of 22 months from the priority date, whichever expires later.

For further options, see Form PCT/ISA/220.

3. For further details, see notes to Form PCT/ISA/220.

Name and mailing address of the ISA/JP	Date of completion of this opinion	Authorized officer
Facsimile No.		Telephone No.

WRITTEN OPINION OF THE INTERNATIONAL SEARCHING AUTHORITY

International application No.
PCT/JP2009/000248

Box No. I **Basis of this opinion**

1. With regard to the **language**, this opinion has been established on the basis of:

   ☒ the international application in the language in which it was filed

   ☐ a translation of the international application into _____, which is the language of a translation furnished for the purposes of international search (Rules 12.3(a) and 23.1(b)).

2. ☐ This opinion has been established taking into account the **rectification of an obvious mistake** authorized by or notified to this Authority under Rule 91 (Rule 43*bis*.1(a))

3. With regard to any **nucleotide and/or amino acid sequence** disclosed in the international application and necessary to the claimed invention, this opinion has been established on the basis of:

   a. type of material

   ☐ a sequence listing

   ☐ table(s) related to the sequence listing

   b. format of material

   ☐ on paper

   ☐ in electronic form

   c. time of filing/furnishing

   ☐ contained in the international application as filed

   ☐ filed together with the international application in electronic form

   ☐ furnished subsequently to this Authority for the purposes of search

4. ☐ In addition, in the case that more than one version or copy of a sequence listing and/or table(s) relating thereto has been filed or furnished, the required statements that the information in the subsequent or additional copies is identical to that in the application as filed or does not go beyond the application as filed, as appropriate, were furnished.

5. Additional comments:

WRITTEN OPINION OF THE INTERNATIONAL SEARCHING AUTHORITY

International application No.
PCT/JP2009/000248

Box No. V **Reasoned statement under Rule 43bis.1(a)(i) with regard to novelty, inventive step or industrial applicability; citations and explanations supporting such statement**

1. Statement

Novelty (N)	Claims	1-6	YES
	Claims		NO
Inventive step (IS)	Claims	1-6	YES
	Claims		NO
Industrial applicability (IA)	Claims	1-6	YES
	Claims		NO

2. Citations and explanations:

Document 1: JP 2001-13677 A (Shin-Etsu Chemical Co., Ltd.), 19 January 2001, claims; paragraph [0031]; fig. 15 (Family: none)

Document 2: JP 1998-229066 A (Canon Inc.), 25 August 1998, claims; fig. 1A & US 2002/0013065 A1 & US 2002/0002767 A1 & EP 856874 A2

Document 3: JP 2007-5472 A (Sumitomo Electric Industries, Ltd.), 11 January 2007, paragraph [0046]; fig. 3 & US 2007/0014915 A1 & EP 1737026 A1

The invention as in claims 1-6 is not described in any of the documents cited in the ISR, and would not be obvious to a person skilled in the art.

PATENT APPLICATION

IN THE UNITED STATES PATENT AND TRADEMARK OFFICE

In re the Application of

Tatsuo ABE et al.

Group Art Unit:

Application No.: 12/864,255

Examiner:

Filed: July 23, 2010

Docket No.: 146221

For: ULTRASONIC CLEANING APPARATUS AND ULTRASONIC CLEANING METHOD

TRANSMITTAL OF CLAIMS AND TRANSLATION, AND
AFFIRMATION OF ACCURACY OF TRANSLATION OF CLAIMS

Commissioner for Patents
P.O. Box 1450
Alexandria, VA 22313-1450

Sir:

Attached hereto is a copy of the Japanese language claims of corresponding PCT application PCT/JP2009/000204 indicated to have novelty, inventive step and industrial applicability in the IPRP. Also attached is an English-language translation of the claims. On information and belief, the English-language translation is an accurate translation of the PCT application claims.

Respectfully submitted,

William P. Berridge
Registration No. 30,024

Christopher W. Brown
Registration No. 38,025

WPB:CWB/rav

Date: February 18, 2011

OLIFF & BERRIDGE, PLC
P.O. Box 320850
Alexandria, Virginia 22320-4850
Telephone: (703) 836-6400

DEPOSIT ACCOUNT USE AUTHORIZATION
Please grant any extension necessary for entry of this filing; Charge any fee due to our Deposit Account No. 15-0461

請求の範囲

[1] 少なくとも、被洗浄物を浸漬して洗浄するための洗浄液を収容する洗浄槽と、該洗浄槽に超音波を伝搬するための伝搬水を収容する超音波伝搬槽と、前記超音波伝搬槽の下部に配置され振動子により超音波を前記伝搬水に重畳する振動板と、洗浄する被洗浄物を前記洗浄槽中に保持する保持治具とを具備し、前記被洗浄物が前記保持治具で保持されて前記洗浄槽内の洗浄液に浸漬され、前記洗浄槽が前記超音波伝搬槽内の伝搬水に浸され、前記振動板により重畳した超音波を伝搬水を介して洗浄槽に伝搬させて前記被洗浄物を超音波洗浄する超音波洗浄装置であって、前記超音波伝搬槽を水平面内で揺動させる伝搬槽揺動機構を具備する超音波洗浄装置。

[2] 前記保持治具を水平面内で揺動させる保持治具揺動機構を具備することを特徴とする請求項１に記載の超音波洗浄装置。

[3] 前記超音波伝搬槽および保持治具は、互いに水平面内で直交方向に揺動するものであることを特徴とする請求項２に記載の超音波洗浄装置。

[4] 被洗浄物を浸漬して洗浄するための洗浄液を洗浄槽に収容し、前記洗浄槽に超音波を伝搬するための伝搬水を超音波伝搬槽に収容し、振動子により超音波を前記伝搬水に重畳する振動板を前記超音波伝搬槽の下部に配置し、前記被洗浄物を保持治具で保持して前記洗浄槽内の洗浄液に浸漬し、前記洗浄槽を前記超音波伝搬槽内の伝搬水に浸し、前記振動板により重畳した超音波を伝搬水を介して洗浄槽に伝搬させて前記被洗浄物を洗浄する超音波洗浄方法であって、前記超音波伝搬槽を水平面内で揺動させながら被洗浄物を超音波洗浄することを特徴とする超音波洗浄方法。

[5] 前記保持治具を水平面内で揺動させることを特徴とする請求項４に記載の超音波洗浄方法。

[6] 前記超音波伝搬槽および保持治具を、互いに水平面内で直交方向に揺動させることを特徴とする請求項５に記載の超音波洗浄方法。

CLAIMS

1. An ultrasonic cleaning apparatus having at least

a cleaning tank for accommodating cleaning liquid in which an object to be cleaned is immersed and cleaned;

an ultrasonic wave transmitting tank for accommodating transmitting water through which ultrasonic waves are transmitted to the cleaning tank;

a vibrating plate placed at a bottom portion of the ultrasonic wave transmitting tank, the vibrating plate superposing the ultrasonic waves on the transmitting water with a transducer; and

a holding jig for holding the object to be cleaned in the cleaning tank,

the apparatus in which the object to be cleaned is ultrasonically cleaned by immersing the object to be cleaned held with the holding jig in the cleaning liquid accommodated in the cleaning tank, putting the cleaning tank into the transmitting water accommodated in the ultrasonic wave transmitting tank, and transmitting the ultrasonic waves superposed with the vibrating plate to the cleaning tank through the transmitting water,

the apparatus comprising a transmitting tank oscillating mechanism for oscillating the ultrasonic wave transmitting tank in a horizontal plane.

2. The ultrasonic cleaning apparatus according to claim 1, further comprising a holding jig oscillating mechanism for oscillating the holding jig in a horizontal plane.

3. The ultrasonic cleaning apparatus according to claim 2, wherein the ultrasonic wave transmitting tank and the holding jig are oscillated in the direction of a right angle to one another in a horizontal plane.

4. An ultrasonic cleaning method comprising the steps of:

accommodating cleaning liquid in a cleaning tank, the cleaning liquid in which an object to be cleaned is immersed and cleaned;

accommodating transmitting water in an ultrasonic wave transmitting tank, the transmitting water through which ultrasonic waves are transmitted to the cleaning tank;

placing a vibrating plate at a bottom portion of the ultrasonic wave transmitting tank, the vibrating plate superposing the ultrasonic waves on the transmitting water with a transducer;

holding the object to be cleaned with a holding jig and immersing the object to be cleaned in the cleaning liquid accommodated in the cleaning tank;

putting the cleaning tank into the transmitting water accommodated in the ultrasonic wave transmitting tank;

cleaning the object to be cleaned ultrasonically by transmitting the ultrasonic waves superposed with the vibrating plate to the cleaning tank through the transmitting water; wherein

the object to be cleaned is ultrasonically cleaned while oscillating the ultrasonic wave transmitting tank in a horizontal plane.

5. The ultrasonic cleaning method according to claim 4, wherein the holding jig is oscillated in a horizontal plane.

6. The ultrasonic cleaning method according to claim 5, wherein the ultrasonic wave transmitting tank and the holding jig are oscillated in the direction of a right angle to one another in a horizontal plane.

UNITED STATES PATENT AND TRADEMARK OFFICE

UNITED STATES DEPARTMENT OF COMMERCE
United States Patent and Trademark Office
Address: COMMISSIONER FOR PATENTS
P.O. Box 1450
Alexandria, Virginia 22313-1450
www.uspto.gov

APPLICATION NO.	FILING DATE	FIRST NAMED INVENTOR	ATTORNEY DOCKET NO.	CONFIRMATION NO.
12/864,255	07/23/2010	Tatsuo Abe	146221	3416

25944 7590 07/13/2011
OLIFF & BERRIDGE, PLC
P.O. BOX 320850
ALEXANDRIA, VA 22320-4850

EXAMINER
GOLIGHTLY, ERIC WAYNE

ART UNIT	PAPER NUMBER
1714	

NOTIFICATION DATE	DELIVERY MODE
07/13/2011	ELECTRONIC

Please find below and/or attached an Office communication concerning this application or proceeding.

The time period for reply, if any, is set in the attached communication.

Notice of the Office communication was sent electronically on above-indicated "Notification Date" to the following e-mail address(es):

OfficeAction25944@oliff.com
jarmstrong@oliff.com

UNITED STATES PATENT AND TRADEMARK OFFICE

Commissioner for Patents
United States Patent and Trademark Office
P.O. Box 1450
Alexandria, VA 22313-1450
www.uspto.gov

BC

July 12, 2011

In re application of	:	DECISION ON REQUEST TO
ABE, TATSUO et al.	:	PARTICIPATE IN PATENT
Serial No. 12/864,255	:	PROSECUTION HIGHWAY
Filed: July 23, 2010	:	PROGRAM AND
Attorney Docket No: **146221**	:	PETITION TO MAKE SPECIAL
	:	UNDER 37 CFR 1.102(a)

This is a decision on the request for reconsideration to participate in the PCT Patent Prosecution Highway (PCT-PPH) pilot program and the petition under 37 CFR 1.102(a), filed February 18, 2011, to make the above-identified application special.

The request and petition are **GRANTED**.

A grantable request to participate in the PCT-PPH pilot program and petition to make special require:

(1) The U.S. application must disclose an eligible relationship to one or more PCT applications where the ISA or IPEA are the IPA, JPO, KIPO, EPO, or USPTO;

(2) At least one claim in the PCT application has novelty, inventive step, and industrial applicability and must be free of any observations in Box VIII in the latest work product in the international stage or applicant must identify and explain why the claim(s) is/are not subject to the observation in Box VIII;

(3) Applicant must submit a copy of the claim(s) from the PCT application(s) that have novelty, inventive step, and industrial applicability along with an English translation thereof and a statement that the English translation is accurate, if the claims are not in the English language;

(4) All the claims in the U.S. application must sufficiently correspond or be amended to sufficiently correspond to the claim(s) that have novelty, inventive step, and industrial applicability in the PCT application(s);

(5) Examination of the U.S. application has not begun;

(6) Applicant must submit a copy of the latest international work product from the PCT application indicating that the claim(s) have novelty, inventive step, and industrial applicability along with an English translation thereof if the latest international work

product is not in the English language; and

(7) Applicant must submit an IDS listing the documents cited by the PCT examiner in the international work product along with copies of documents except U.S. patents or U.S. patent application publications.

The request to participate in the PPH program and petition comply with the above requirements. Accordingly, the above-identified application has been accorded "special" status.

The application is being forwarded to the examiner for action on the merits commensurate with this decision.

Any inquiry regarding this decision should be directed to Blaine Copenheaver, Quality Assurance Specialist, at (571) 272-1156.

All other inquiries concerning the examination or status of the application is accessible in the PAIR system at http://www.uspto.gov/ebc/index.html.

/Blaine Copenheaver/

Blaine Copenheaver
Quality Assurance Specialist
Technology Center 1700

UNITED STATES PATENT AND TRADEMARK OFFICE

UNITED STATES DEPARTMENT OF COMMERCE
United States Patent and Trademark Office
Address: COMMISSIONER FOR PATENTS
P.O. Box 1450
Alexandria, Virginia 22313-1450
www.uspto.gov

APPLICATION NO.	FILING DATE	FIRST NAMED INVENTOR	ATTORNEY DOCKET NO.	CONFIRMATION NO.
12/864,281	09/23/2010	Shohei Yamada	1152-0368PUS1	3598

2292 7590 12/22/2010
BIRCH STEWART KOLASCH & BIRCH
PO BOX 747
FALLS CHURCH, VA 22040-0747

EXAMINER

ART UNIT	PAPER NUMBER
2617	

NOTIFICATION DATE	DELIVERY MODE
12/22/2010	ELECTRONIC

Please find below and/or attached an Office communication concerning this application or proceeding.

The time period for reply, if any, is set in the attached communication.

Notice of the Office communication was sent electronically on above-indicated "Notification Date" to the following e-mail address(es):

mailroom@bskb.com

UNITED STATES PATENT AND TRADEMARK OFFICE

Commissioner for Patents
United States Patent and Trademark Office
P.O. Box 1450
Alexandria, VA 22313-1450
www.uspto.gov

BIRCH STEWART KOLASCH & BIRCH
PO BOX 747
FALLS CHURCH VA 22040-0747

In re Application of	:	
YAMADA, SHOHEI, et al.	:	DECISION ON REQUEST TO
Application No. 12/864,281	:	PARTICIPATE IN PATENT
Filed: July 23, 2010	:	PROSECUTION HIGHWAY
Attorney Docket No. **1152-0368PUS1**	:	PROGRAM AND PETITION
	:	TO MAKE SPECIAL UNDER
	:	37 CFR 1.102(a)

This is a decision on the request to participate in the Patent Prosecution Highway (PPH) program and the petition under 37 CFR 1.102(a), filed November 15, 2010 to make the above-identified application special.

The request and petition are **GRANTED**.

A grantable request to participate in the PPH program and petition to make special require:

(1) The U.S. application must validly claim priority under 35 U.S.C. 119(a) to one or more applications filed in the JPO;
(2) Applicant must submit a copy of the allowable/patentable claim(s) from the JPO application(s) along with an English translation thereof and a statement that the English translation is accurate;
(3) All the claims in the U.S. application must sufficiently correspond or be amended to sufficiently correspond to the allowable/patentable claim(s) in the JPO application(s);
(4) Examination of the U.S. application has not begun;
(5) Applicant must submit a copy of all the office actions from each of the JPO application(s) containing the allowable/patentable claim(s) along with an English translation thereof and a statement that the English translation is accurate; and
(6) Applicant must submit an IDS listing the documents cited by the JPO examiner in the JPO office action along with copies of documents except U.S. patents or U.S. patent application publications.

The request to participate in the PPH program and petition comply with the above requirements. Accordingly, the above-identified application has been accorded "special" status.

Telephone inquiries concerning this decision should be directed to Doris To at 571-272-7629.

All other inquiries concerning the examination or status of the application should be directed to Patent Application Information Retrieval (PAIR) system.

The application will be forwarded to the examiner for action on the merits commensurate with this decision.

/Doris To/

Doris To
Quality Assurance Specialist
Technology Center 2600
Communications

UNITED STATES PATENT AND TRADEMARK OFFICE

Commissioner for Patents
United States Patent and Trademark Office
P.O. Box 1450
Alexandria, VA 22313-1450
www.uspto.gov

MAILED

FEB 01 2011

PCT LEGAL ADMINISTRATION

23911
CROWELL & MORING LLP
Intellectual Property Group
P.O. Box 14300
Washington, DC 20044-4300

In re Application of
DANNER *et al*
U.S. Application No.: 12/864,335
PCT No.: PCT/EP2008/010007
Int. Filing Date: 26 November 2008
Priority Date: 25 January 2008
Docket No.: 095309.62649US
For: DRIVER ASSISTANCE SYSTEM AND METHOD FOR SUPPORTING THE DRIVER OF A VEHICLE IN MAINTAINING A TRAFFIC LANE LIMITED BY TRAFFIC LANE MARKINGS

DECISION

This decision is in response to the declaration submitted on 01 December 2010 which is treated as a petition under 37 CFR 1.42. No fee is required.

BACKGROUND

On 01 September 2010, a Notification of Missing Requirements Under 35 U.S.C. 371 in the United States Designated/Elected Office (DO/EO/US) (Form PCT/DO/EO/905) was mailed indicating that a declaration in compliance with 37 CFR 1.497(a) and (b) was required. A two-month time limit was set for response.

On 01 December 2010, applicants filed a response which was accompanied by, *inter alia*, an executed declaration and a one-month extension and an extension fee.

DISCUSSION

37 CFR 1.42 *When the Inventor is Dead*, states, in part:

> In case of the death of the inventor, the legal representative (executor, administrator, etc.) of the deceased inventor may make the necessary oath or declaration, and apply for and obtain the patent.

Applicants have furnished a declaration executed by six of the seven named inventors, and by three legal representatives of a deceased inventor, Ingo DUDECK.

It is first noted that the declaration executed by the six inventors erroneously notes that the inventors are all deceased. It is presumed that this is merely a clerical mistake on the declaration and that the six inventors executed the declaration. As such, the declaration is accepted for the six inventors. If this is not the case, applicants must immediately notify the Office and submit declarations executed by their legal representatives.

With regards to the legal representatives, the declaration is not accepted for the following reasons.

37 CFR 1.497(b)(2) requires that the declaration list the citizenship, residence and mailing address of the legal representative on the declaration. Here, the residence and mailing address of the legal representatives are not recorded on the declaration.

In addition, the declaration contains noninitialed changes on the signature block of Anke Dorie DUDECK and Lars DUDECK. Any changes made in ink in the application or oath prior to signing should be initialed and dated by the applicants prior to execution of the oath or declaration. The Office will require a new oath or declaration if the alterations are not initialed and dated. MPEP § 605.04(a)

CONCLUSION

For the reasons listed above, applicants' petition under 37 CFR 1.42 is **DISMISSED** without prejudice.

Applicants are required to provide an acceptable response within a time limit of **TWO (2) MONTHS** from the mail date of this decision. Extension of time may be granted under 37 CFR 1.136(a). **Failure to timely respond will result in the abandonment of the application.**

Any further correspondence with respect to this matter may be filed electronically via EFS-Web selecting the document description "Petition for review and processing by the PCT Legal Office" or by mail addressed to Mail Stop PCT, Commissioner for Patents, Office of PCT Legal Administration, P.O. Box 1450, Alexandria, Virginia 22313-1450, with the contents of the letter marked to the attention of the Office of PCT Legal Administration.

James Thomson

James Thomson
Attorney Advisor
Office of PCT Legal Administration

Tel.: (571) 272-3302

UNITED STATES PATENT AND TRADEMARK OFFICE

Commissioner for Patents
United States Patent and Trademark Office
P.O. Box 1450
Alexandria, VA 22313-1450
www.uspto.gov

23911
CROWELL & MORING LLP
Intellectual Property Group
P.O. Box 14300
Washington, DC 20044-4300

MAILED

JUN 14 2011

PCT LEGAL ADMINISTRATION

In re Application of :
DANNER *et al* :
U.S. Application No.: 12/864,335 :
PCT No.: PCT/EP2008/010007 :
Int. Filing Date: 26 November 2008 :
Priority Date: 25 January 2008 :
Docket No.: 095309.62649US :
For: DRIVER ASSISTANCE SYSTEM AND METHOD FOR SUPPORTING THE DRIVER OF A VEHICLE IN MAINTAINING A TRAFFIC LANE LIMITED BY TRAFFIC LANE MARKINGS :

DECISION

This decision is in response to the declaration filed on 21 April 2011 which is treated as a renewed petition under 37 CFR 1.42.

BACKGROUND

On 02 February 2011, a decision dismissing applicants' petition under 37 CFR 1.42 was mailed. Applicant was given two months to respond with extensions of time available.

On 21 April 2011, applicants filed the subject response which was accompanied by, *inter alia*, a one-month extension and $130.00 extension fee and a new declaration signed by the three legal representative of deceased inventor, Ingo DUDECK.

DISCUSSION

The declaration provided 01 December 2010 did not comply with the requirements of 37 CFR 1.497(b)(2) as the residence and mailing address of the three legal representatives were not recorded on the declaration.

In the renewed response, applicants submitted a new declaration signed by the three heirs (legal representatives) of Ingo DUDECK. The citizenship, residence and address of the three legal representatives are listed on the declaration.

The declaration filed 21 April 2011 is considered a composite declaration as it contains one first page and two second pages.

While composite declarations are not in accordance with MPEP § 201.03 ("Where individual declarations are executed, they must be submitted as individual declarations rather than combined into one declaration"), they are sufficient for purposes of entry into the U.S. national stage provided the requirements of 37 CFR 1.497(a) and (b) are satisfied. *See* 37 CFR 1.497(c).

The declaration filed 21 April 2011 is acceptable for the purposes of 37 CFR 1.497(a) and (b). Acceptance of a composite declaration as sufficient for purposes of 35 U.S.C. 371(c) does not prohibit the examiner from requiring correction at a later date.

CONCLUSION

The papers filed under 37 CFR 1.42 are **ACCEPTED**.

Applicants have completed the requirements for acceptance under 35 U.S.C. 371(c). The application has an international filing date of 26 November 2008 under 35 U.S.C. 363, and a 35 U.S.C. 371 date of 21 April 2011.

This application is being forwarded to the National Stage Processing Division of the Office of PCT Operations for continued processing.

James Thomson

James Thomson
Attorney Advisor
Office of PCT Legal Administration

Tel.: (571) 272-3302

27 SEP 2010

UNITED STATES PATENT AND TRADEMARK OFFICE

Commissioner for Patents
United States Patent and Trademark Office
9P.O. Box 1450
Alexandria, VA 22313-1450
www.uspto.gov

SALIWANCHIK LLOYD & SALIWANCHIK
A PROFESSIONAL ASSOCIATION
PO Box 142950
GAINESVILLE FL 32614

In re Application of	:	
KURENOV, Sergei, et al.	:	
Application No.: 12/864,340	:	
PCT No.: PCT/US09/031963	:	
Int. Filing Date: 26 January 2009	:	DECISION
Priority Date: 25 January 2008	:	
Attorney Docket No.: 47012-P266WOUS	:	
For: DEVICES AND METHODS FOR	:	
... A VIRTUAL ENVIRONMENT	:	

This decision is in response to applicants' petition under 37 CFR 1.182, filed in the United States Patent and Trademark Office on 27 July 2010.

BACKGROUND

On 23 July 2010, applicants national phase entry papers indicating the filing was the national stage of PCT/US2009/031963, but supplied electronic data indicating the application was the national phase entry of PCT/US2010/031963.

On 27 July 2010, applicants filed this petition under 37 CFR 1.182 and indicated that the application was a national phase entry of PCT/US2009/031963.

DISCUSSION

A filing under 35 USC 371 is the national phase entry of only one international application. Applicant indicates that this application was intended to be the national phase of PCT/US2009/031963. Applicant has paid the required petition fee. The indications in this application will be corrected to indicate that this is a national phase of PCT/US2009/031963.

CONCLUSION

For the reasons discussed above, applicant's petition under 37 CFR 1.182 is **GRANTED**.

This application is being returned to the National Stage Processing Branch of the Office of Patent Application Processing for further action consistent with this decision.

/Erin P. Thomson/

Erin P. Thomson
Attorney Advisor
PCT Legal Administration

Telephone: 571-272-3292

Doc Code: PET.GREEN
Document Description: Petition for Green Tech Pilot

PTO/SB/420 (11-10)
Approved for use through 01/31/2011. OMB 0651-0062
U.S. Patent and Trademark Office; U. S. DEPARTMENT OF COMMERCE
Under the Paperwork Reduction Act of 1995, no persons are required to respond to a collection of information unless it displays a valid OMB control number.

PETITION TO MAKE SPECIAL UNDER THE GREEN TECHNOLOGY PILOT PROGRAM

Attorney Docket Number: AA 1837 US	Application Number (if known): 12864347	Filing date: 2010-07-23
First Named Inventor: David William Prest		
Title: Catalysed Filter		

APPLICANT HEREBY REQUESTS TO PARTICIPATE IN THE GREEN TECHNOLOGY PILOT PROGRAM FOR THE ABOVE-IDENTIFIED APPLICATION. See Instruction Sheet on page 2.

This petition must be timely filed electronically using the USPTO electronic filing system, EFS-Web.

1. By filing this petition:

   Applicant is requesting early publication: Applicant hereby requests early publication under 37 CFR 1.219 and the publication fee set forth in 37 CFR 1.18(d) accompanies this request.

2. By filing this petition: applicant is agreeing to make an election without traverse in a telephonic interview and elect an invention that meets the eligibility requirements for the Green Technology Pilot Program, if the Office determines that the claims are not obviously directed to a single invention. See Instruction Sheet.

3. This request is accompanied by statements of special status for the eligibility requirement.

4. The application contains no more than three (3) independent claims and twenty (20) total claims.

5. The application does not contain any multiple dependent claims.

6. Other attachments: _____

Signature /Stephen J. Driscoll/	Date 2011-01-31
Name (Print/Typed) Stephen J. Driscoll	Registration Number 37564

Note: *Signatures of all the inventors or assignees of record of the entire interest or their representative(s) are required in accordance with 37 CFR 1.33 and 11.18. Please see 37 CFR 1.4(d) for the form of the signature. If necessary, submit multiple forms for more than one signature see below*.*

☒ *Total of 1 forms are submitted.

The information is required to obtain or retain a benefit by the public which is to file (and by the USPTO to process) an application. Confidentiality is governed by 35 U.S.C. 122 and 37 CFR 1.11 and 1.14. This collection is estimated to take 12 hours to complete, including gathering, preparing, and submitting the completed application form to the USPTO. Time will vary depending upon the individual case. Any comments on the amount of time you require to complete this form and/or suggestions for reducing this burden, should be sent to the Chief Information Officer, U.S. Patent and Trademark Office, U.S. Department of Commerce, P.O. Box 1450, Alexandria, VA 22313-1450. DO NOT SEND FEES OR COMPLETED FORMS TO THIS ADDRESS. **SEND TO: Commissioner for Patents, P.O. Box 1450, Alexandria, VA 22313-1450.**

If you need assistance in completing the form, call 1-800-PTO-9199 and select option 2.

UNITED STATES PATENT AND TRADEMARK OFFICE

UNITED STATES DEPARTMENT OF COMMERCE
United States Patent and Trademark Office
Address: COMMISSIONER FOR PATENTS
P.O. Box 1450
Alexandria, Virginia 22313-1450
www.uspto.gov

APPLICATION NO.	FILING DATE	FIRST NAMED INVENTOR	ATTORNEY DOCKET NO.	CONFIRMATION NO.
12/864,347	10/18/2010	David William Prest	AA 1837 US	3933

95567 7590 02/07/2011
RatnerPrestia (JM)
P.O. Box 980
Valley Forge, PA 19482-0980

EXAMINER
WOOD, ELIZABETH D

ART UNIT	PAPER NUMBER
1732	

MAIL DATE	DELIVERY MODE
02/07/2011	PAPER

Please find below and/or attached an Office communication concerning this application or proceeding.

The time period for reply, if any, is set in the attached communication.

UNITED STATES PATENT AND TRADEMARK OFFICE

Commissioner for Patents
United States Patent and Trademark Office
P.O. Box 1450
Alexandria, VA 22313-1450
www.uspto.gov

2/07/2011

RatnerPrestia (JM)
P.O. Box 980
Valley Forge PA 19482-0980

In re Application of	:	
David William Prest	:	DECISION ON PETITION
Application No. 12/864,347	:	TO MAKE SPECIAL UNDER
Filed: July 23, 2010	:	THE GREEN TECHNOLOGY
Attorney Docket No. AA 1837 US	:	PILOT PROGRAM

This is a decision on the petition under 37 CFR 1.102, filed January 31, 2011, to make the above-identified application special under the pilot program for applications pertaining to Green Technologies as set forth in 74 Federal Register Notice 64666 (December 8, 2009) and amended by 75 Federal Register Notice 28554 (May 21, 2010) and 75 Federal Register Notice 69049 (November 10, 2010).

The petition is **GRANTED**.

A grantable petition to make an application special under 37 CFR 1.102 and the pilot program as set forth in 74 FR 64666 must be directed to a nonprovisional application filed under 35 USC 111(a) or be a national stage entry under 35 USC 371, exclusive of any reissue applications.

In order to qualify for special status, the following requirements must be met. 1) The application must have no more than 3 independent claims and no more than 20 total claims. 2) The application must not contain any multiple dependent claims. 3) The petition must state the basis for seeking special status, i.e., the claimed invention either: A) materially enhances the quality of the environment or B) materially contributes to: i) the discovery or development of renewable energy resources, ii) the more efficient utilization and conservation of energy resources, or iii) greenhouse gas emission reduction. 4) If the disclosure is not clear on its face that the claimed invention materially contributes under category (A) or (B), the petition must be accompanied by a statement by the applicant, assignee, or an attorney/agent registered to practice before the Office explaining how the materiality standard is met. 5) A statement that applicant will agree to make an election without traverse in a telephonic interview if a restriction requirement is made by the examiner. 6) The petition to make special must be filed electronically. 7) The petition must be filed at least one day prior to the date that a first Office Action appears in the Patent Application Information Retrieval (PAIR) system. 8) The petition must be accompanied by a request for early publication in compliance with 37 CFR 1.219 and include the publication fee as set forth in 37 CFR 1.18(d).

The requirement for a fee for consideration of the petition to make special for applications pertaining to Green Technologies has been waived.

The instant petition complies with items 1 – 8 above. Accordingly, the above-identified application has been accorded "special" status.

Telephone inquires concerning this decision should be directed to Blaine Copenheaver at 571-272-1156.

The application is being forwarded to the examiner for action on the merits commensurate with this decision.

/Blaine Copenheaver/

Blaine Copenheaver
Quality Assurance Specialist
Technology Center 1700

UNITED STATES PATENT AND TRADEMARK OFFICE

Commissioner for Patents
United States Patent and Trademark Office
P.O. Box 1450
Alexandria, VA 22313-1450
www.uspto.gov

21874
EDWARDS ANGELL PALMER & DODGE LLP
P.O. Box 55874
Boston, MA 02205

MAILED

NOV 18 2010

PCT LEGAL ADMINISTRATION

In re Application of
WALENSKY, Loren
Application No.: 12/864,375
Filing Date: July 23, 2010
Attorney's Docket No.: 69208(70157)
For: COMPOSITIONS AND METHODS FOR THE TREATMENT OF VIRAL INFECTIONS

DECISION

This decision is in response to the "Request Withdrawal of Erroneously Issued Notice of Abandonment" filed August 24, 2010 which is treated as a petition under 37 CFR 1.181. No fee is required.

BACKGROUND

On July 23, 2010, applicant filed papers using the USPTO EFS-Web system to enter the "U.S. National Stage under 35 USC 371" of PCT/US09/00438.

On August 13, 2010, the United States Designated/Elected Office (DO/EO/US) mailed a Notification of Abandonment (Form PCT/DO/EO/909) indicating that applicant failed to provide the U.S. Basic National Fee by 30 months pursuant to 37 CFR 1.495(b)(2).

On August 24, 2010, applicant filed the subject petition to withdraw the holding of abandonment.

DISCUSSION

Applicant claims that the Form PCT/DO/EO/909 was issued in error, and should be withdrawn. Applicant asserts that the above-captioned application was filed as a continuation application under 35 U.S.C. 111(a), not as a national stage application under 35 U.S.C. 371. Accordingly, there is no requirement to pay a U.S. Basic National Fee.

Any intended filing of an international application as a national stage application must clearly be identified as such and must satisfy all the conditions set forth in 35 U.S.C. 371(c). Otherwise, the submission will be considered as being made under 35 U.S.C. 111(a). 37 CFR 1.495(g). In addition, section 1893.03(a) of the Manual of Patent Examining Procedure states, in part:

In accordance with the notice at 1077 O.G. 13 (April 14, 1987) . . . if there are any conflicting instructions as to whether the filing is under 35 U.S.C. 111(a) or 35 U.S.C. 371, the application will be accepted as filed under 35 U.S.C. 111(a).

A review of the subject application shows that applicant submitted the application electronically as a "U.S. National Stage under 35 USC 371" of "PCT/US09/00438." As such, the Office processed the above-captioned application as the national stage of PCT/US2009/000438.

However, the Utility Patent Application Transmittal letter filed July 23, 2010 states under the title that the papers were "[o]nly for new nonprovisional applications under 37 CFR 1.53(b)." Application papers submitted under 37 CFR 1.53(b) are filed under 35 U.S.C. 111(a). In addition, the Application Data Sheet filed July 23, 2010 states that the above-captioned application is a "Continuation of PCTUS2009000438." Moreover, the first paragraph of the amendment to the specification states that "[t]his application is a Continuation of international Application No. PCT/US2009/000438."

These are clearly conflicting instructions.

CONCLUSION

Applicant's petition to withdraw the holding of abandonment pursuant to 37 CFR 1.181 is **GRANTED**.

The Form PCT/DO/EO/909 mailed August 13, 2010 is hereby **VACATED**.

The papers deposited on July 23, 2010 constitute a filing under 35 U.S.C. 111(a), not 35 U.S.C. 371.

This application is being forwarded to the Office of Patent Application Processing to process the application as a continuation of PCT/US2009/000438 under 35 U.S.C. 111(a), with a filing date of July 23, 2010.

James Thomson

James Thomson
Attorney Advisor
Office of PCT Legal Administration

Tel.: (571) 272-3302

UNITED STATES PATENT AND TRADEMARK OFFICE

Commissioner for Patents
United States Patent and Trademark Office
P.O. Box 1450
Alexandria, VA 22313-1450
www.uspto.gov

Young & Thompson
209 Madison Street
Suite 500
Alexandria VA 22314

MAILED

MAY 18 2011

PCT LEGAL ADMINISTRATION

In re Application of :
CHIBA et al. :
U.S. Application No. 12/864,382 :
PCT No.: PCT/JP2009/050873 :
Int. Filing Date: 21 January 2009 : DECISION ON REQUEST
Priority Date: 23 January 2008 :
Attorney Docket No.: 8075-1155 :
For: HIGHLY CLEAN AND HOT VALVE :

This decision is issued in response to applicants' "Response to Notification of Defective Response" filed 11 March 2011. Applicants are notifying the Office that the fifth, eighth, and ninth inventors' name are Yasushi YAGI, Hiroshi KENEKO, and Koyu HASEGAWA as indicated on the declaration (filed 18 October 2010) rather than Yasuji Yagi, Hiroyoshi Kaneko, and Kosuke Hasegawa as indicated on the published international application. Applicants' request has been treated under 37 CFR 1.181. No petition fee is due.

Petitioner asserts in the present petition that "the correct spelling of the fifth, eighth, and ninth inventors' name are Yasuji Yagi, Hiroyoshi Kaneko, and Kosuke Hasegawa." Applicants' statements are being construed that the spelling error contained in the international application resulted from a typographical or transliteration error; applicants must inform this Office immediately if this is not a proper interpretation of the above statement. As indicated in Section 201.03 of the Manual of Patent Examining Procedure, where a typographical or transliteration error in the spelling of an inventor's name is discovered, a petition under 37 CFR 1.48(a) is not required. Accordingly, petitioner's explanation of the difference in the spelling of the fifth, eighth, and ninth inventors' name is accepted and noted for the record. For the reasons above, the request is **GRANTED**.

This application is being returned to the United States Designated/Elected Office for processing in accordance with this decision.

Anthony Smith
Attorney-Advisor
Office of PCT Legal Administration
Tel.: 571-272-3298

PTO/SB/20PCT-KR (06-10)
Approved for use through 01/31/2012. OMB 0651-0058
U.S. Patent and Trademark Office; U. S. DEPARTMENT OF COMMERCE
Under the Paperwork Reduction Act of 1995, no persons are required to respond to a collection of information unless it displays a valid OMB control number.

REQUEST FOR PARTICIPATION IN THE PATENT COOPERATION TREATY - PATENT PROSECUTION HIGHWAY (PCT-PPH) PILOT PROGRAM BETWEEN THE KOREAN INTELLECTUAL PROPERTY OFFICE (KIPO) AND THE USPTO

Application No:	12/864,398	Filing date:	07/23/2010
First Named Inventor:	Mark Winebrand		
Title of the Invention:	Absorber Assembly for an Anechoic Chamber		

THIS REQUEST FOR PARTICIPATION IN THE PCT-PPH PILOT PROGRAM ALONG WITH THE REQUIRED DOCUMENTS MUST BE SUBMITTED VIA EFS-WEB. INFORMATION REGARDING EFS-WEB IS AVAILABLE AT HTTP://WWW.USPTO.GOV/EBC/EFS_HELP.HTML

APPLICANT HEREBY REQUESTS PARTICIPATION IN THE PCT-PPH PROGRAM AND PETITIONS TO MAKE THE ABOVE-IDENTIFIED APPLICATION SPECIAL UNDER THE PCT-PPH PROGRAM.

The above-identified application is (1) a national stage entry of the corresponding PCT application, or (2) a national stage entry of another PCT application which claims priority to the corresponding PCT application, or (3) a national application that claims domestic/ foreign priority to the corresponding PCT application, or (4) a national application which forms the basis for the priority claim in the corresponding PCT application, or (5) a continuing application of a U.S. application that satisfies one of (1) to (4) above, or (6) a U.S. application that claims domestic benefit to a U.S. provisional application which forms the basis for the priority claim in the corresponding PCT application.

The corresponding PCT application number(s) is/are: PCT/US2009/062473

The international date of the corresponding PCT application(s) is/are: October 29, 2009

I. List of Required Documents:

a. **A copy of the latest international work product (WO/ISA, WO/IPEA, or IPER) in the above–identified corresponding PCT application(s)**

☐ Is attached.

☒ Is not attached because the document is already in the U.S. application.

b. **A copy of all claims which were indicated as having novelty, inventive step and industrial applicability in the above-identified corresponding PCT application(s).**

☒ Is attached.

☐ Is not attached because the document is already in the U.S. application.

c. **English translations of the documents in a. and b. above are attached (if the documents are not in the English language). A statement that the English translation is accurate is attached for the document in b. above.**

This collection of information is required by 35 U.S.C. 119, 37 CFR 1.55, and 37 CFR 1.102(d). The information is required to obtain or retain a benefit by the public, which is to file (and by the USPTO to process) an application. Confidentiality is governed by 35 U.S.C. 122 and 37 CFR 1.11 and 1.14. This collection is estimated to take 2 hours to complete, including gathering, preparing, and submitting the completed application form to the USPTO. Time will vary depending upon the individual case. Any comments on the amount of time you require to complete this form and/or suggestions for reducing this burden should be sent to the Chief Information Officer, U.S. Patent and Trademark Office, U.S. Department of Commerce, P.O. Box 1450, Alexandria, VA 22313-1450. DO NOT SEND FEES OR COMPLETED FORMS TO THIS ADDRESS.

Approved for use through 01/31/2012. OMB 0651-0058
U.S.Patent and Trademark Office; U.S. DEPARTMENT OF COMMERCE

Under the Paperwork Reduction Act of 1995, no persons are required to respond to a collection of information unless it displays a valid OMB control number.

REQUEST FOR PARTICIPATION IN THE PCT-PPH PILOT PROGRAM BETWEEN THE KIPO AND THE USPTO

(continued)

Application No.:	12/864398
First Named Inventor:	Mark Winebrand

d. **(1) An information disclosure statement listing the documents cited in the international work products (ISR, WO/ISA, WO/IPEA, IPER) of the corresponding PCT application.**

■ Is attached

■ Has already been filed in the above-identified U.S. application on 07/23/2010 (all but one reference)

(2) Copies of all documents (except) for U.S. patents or U.S. patent application publications)

■ Are attached

Have already been filed in the above-identified U.S. application on 07/23/2010(all but one reference)

II. Claims Correspondence Table:

Claims in US Application	Patentable Claims in the corresponding PCT Application	Explanation regarding the correspondence
1-20	1-20	Claims 1-20 are identical in both applications

III. All the claims in the US application sufficiently correspond to the patentable claims in the corresponding PCT application.

Signature	Michael G. Crilly, Esq.	Date	09/09/2010
Name (Print/Typed)	Michael G. Crilly, Esquire	Registration Number	44631

CLAIMS

What is claimed is:

1. An absorber assembly for use within an anechoic chamber comprising:

(a) a plurality of first wedges which are substantially parallel; and

(b) a plurality of second wedges which are substantially parallel;

wherein said first wedges and said second wedges are disposed so as to form an intersecting pattern which is substantially v-shaped, each of said first wedges and said second wedges having a substantially triangular-shaped cross section with a pair of side walls and a base wall bound between a first end and a second end, said second end of each said first wedges contacts and covers one said first end of each said second wedges along a contact plane, said first wedges and said second wedges disposed at an angle about said contact plane, said absorber assembly accounting for specular reflections and diffracted waves so as to better control primary and secondary scattered fields within said anechoic chamber.

2. The absorber assembly of claim 1, wherein said first wedges and said second wedges are disposed in a convex and/or concave arrangement about said contact plane along a wall.

3. The absorber assembly of claim 1, wherein at least one of said side walls is linear shaped or non-linear shaped.

4. The absorber assembly of claim 1, wherein said first wedges and said second wedges are disposed in an asymmetrical arrangement about said contact plane.

5. The absorber assembly of claim 1, wherein said contact plane is biased to one side of said absorber assembly.

6. The absorber assembly of claim 1, wherein said first wedges and said second wedges are arcuate shaped along the length of said wedges.

7. The absorber assembly of claim 1, wherein said angle varies along the length of said absorber assembly.

8. The absorber assembly of claim 1, wherein said contact plane is skewed.

9. The absorber assembly of claim 1, wherein said anechoic chamber collects data for electromagnetic compatibility, far--field antenna pattern, near-field measurements, or radar cross section.

10. The absorber assembly of claim 1, wherein said anechoic chamber is a tapered or compact range design or illuminated by a direct source antenna.

11. The absorber assembly of claim 1, wherein said plurality of first wedges and said plurality of second wedges are applied to partially cover at least one interior surface of said anechoic chamber.

12. The absorber assembly of claim 1, wherein said anechoic chamber includes at least one end wall which is shaped and includes a plurality of pyramid-shaped or wedge-shaped absorbers.

13. The absorber assembly of claim 12, wherein said anechoic chamber collects data for electromagnetic compatibility, far--field antenna pattern, near-field measurements, or radar cross section.

14. The absorber assembly of claim 12, wherein said anechoic chamber is a tapered or compact range design or illuminated by a direct source antenna.

15. The absorber assembly of claim 1, wherein at least one wall of said anechoic chamber is shaped and said plurality of first wedges and said plurality of second wedges at least partially cover said wall.

16. The absorber assembly of claim 15, wherein said anechoic chamber collects data for electromagnetic compatibility, far--field antenna pattern, near-field measurements, or radar cross section.

17. The absorber assembly of claim 15, wherein said anechoic chamber is a tapered or compact range design or illuminated by a direct source antenna.

18. A method for minimizing scattering within an anechoic chamber comprising the steps of:

(a) reflecting an electromagnetic wave away from a quiet zone, a test item, and/or a source after a first impingement with an absorber assembly;

(b) controlling the diffraction of said electromagnetic wave away from said quiet zone, said test item, and/or said source after said first impingement; and

(c) controlling the diffraction of said electromagnetic wave away from said quiet zone, said test item, and/or said source after a second impingement by said electromagnetic wave in step (b);

wherein said absorber assembly includes:

(i) a plurality of first wedges which are substantially parallel; and

(ii) a plurality of second wedges which are substantially parallel;

wherein said first wedges and said second wedges are disposed so as to form a pattern which is substantially v-shaped, each of said first wedges and said second wedges having a substantially triangular-

shaped cross section with a pair of side walls and a base wall bound between a first end and a second end, said second end of each said first wedges contacts and covers one said first end of each said second wedges along a contact plane, said side walls intersecting to form a ridge line, said ridge line being substantially v-shaped along a pair of contacting said first wedge and said second wedge, said ridge line controls the diffraction of said electromagnetic wave after said first impingement and said second impingement.

19. The absorber assembly of claim 18, wherein said anechoic chamber collects data for electromagnetic compatibility, far--field antenna pattern, near-field measurements, or radar cross section.

20. The absorber assembly of claim 18, wherein said anechoic chamber is a tapered or compact range design or illuminated by a direct source antenna.

UNITED STATES PATENT AND TRADEMARK OFFICE

UNITED STATES DEPARTMENT OF COMMERCE
United States Patent and Trademark Office
Address: COMMISSIONER FOR PATENTS
P.O. Box 1450
Alexandria, Virginia 22313-1450
www.uspto.gov

APPLICATION NO.	FILING DATE	FIRST NAMED INVENTOR	ATTORNEY DOCKET NO.	CONFIRMATION NO.
12/864,398	07/23/2010	Mark Winebrand	OR200903NP	4206

90850 7590 03/09/2011
Law Offices of Michael Crilly
104 South York Road
Hatboro, PA 19040

EXAMINER
BYTHROW, PETER M

ART UNIT	PAPER NUMBER
3662	

MAIL DATE	DELIVERY MODE
03/09/2011	PAPER

Please find below and/or attached an Office communication concerning this application or proceeding.

The time period for reply, if any, is set in the attached communication.

UNITED STATES PATENT AND TRADEMARK OFFICE

MAR - 9 2011

Commissioner for Patents
United States Patent and Trademark Office
P.O. Box 1450
Alexandria, VA 22313-1450
www.uspto.gov

Law Offices of Michael Crilly
104 South York Road
Hatboro PA 19040

In re application of Winebrand et al. Application No. 12/864,398 Filed: July 23, 2010 For: ABSORBER ASSEMBLY FOR AN ANECHOIC CHAMBER	**DECISION ON REQUEST TO PARTICIPATE IN PATENT PROSECUTION HIGHWAY PROGRAM AND PETITION TO MAKE SPECIAL UNDER 37 CFR 1.102(a)**

This is a decision on the request to participate in the Patent Prosecution Highway (PPH) program and the petition under 37 CFR 1.102(a), filed September 09, 2010 to make the above-identified application special.

The request and petition are **GRANTED**.

A grantable request to participate in the PPH program and petition to make special require:

(1) The U.S. application must disclose an eligible relationship to one or more PCT applications filed in the KIPO or USPTO;
(2) Applicant must submit a copy of the allowable/patentable claim(s) from the PCT application(s) latest international work product (the written opinion or the IPER) along with an English translation thereof and a statement that the English translation is accurate;
(3) All the claims in the U.S. application must sufficiently correspond or be amended to sufficiently correspond to the allowable/patentable claim(s) in the PCT application(s);
(4) Examination of the U.S. application has not begun;
(5) Applicant must submit a copy of the latest international work product from the PCT application containing the allowable/patentable claim(s) along with an English translation thereof and a statement that the English translation is accurate;
(6) Applicant must submit an IDS listing the documents cited by the PCT examiner in the international work product along with copies of documents except U.S. patents or U.S. patent application publications.

In light of the petition being properly submitted via EFS-Web as is required, the request to participate in the PPH program complies with the above requirements, the above-identified application has been accorded "special" status.

All other inquiries concerning the examination or status of the application should be directed to the Patent Application Information Retrieval (PAIR) system.

The application is being forwarded to the examiner for action on the merits commensurate with this decision as soon as any pre-exam processing has been completed.

Any inquiry regarding this decision should be directed to Mikado Buiz, Quality Assurance Specialist, at (571) 272-6578.

/ Mikado Buiz /

Mikado Buiz,
Quality Assurance Specialist
Technology Center 3600

MB/MB: 03/09/11

PTO/SB/20PCT-JP (05-10)
Approved for use through 01/31/2012. OMB 0651-0058
U.S. Patent and Trademark Office; U. S. DEPARTMENT OF COMMERCE
Under the Paperwork Reduction Act of 1995, no persons are required to respond to a collection of information unless it displays a valid OMB control number.

REQUEST FOR PARTICIPATION IN THE PATENT COOPERATION TREATY - PATENT PROSECUTION HIGHWAY (PCT-PPH) PILOT PROGRAM BETWEEN THE JAPAN PATENT OFFICE (JPO) AND THE USPTO

Application No:	12/864,419 (050395-0481)	Filing date:	July 23, 2010
First Named Inventor:	Masatada NUMANO		
Title of the Invention:	MAGNESIUM ALLOY SHEET MATERIAL		

THIS REQUEST FOR PARTICIPATION IN THE PCT-PPH PILOT PROGRAM ALONG WITH THE REQUIRED DOCUMENTS MUST BE SUBMITTED VIA EFS-WEB. INFORMATION REGARDING EFS-WEB IS AVAILABLE AT HTTP://WWW.USPTO.GOV/EBC/EFS_HELP.HTML

APPLICANT HEREBY REQUESTS PARTICIPATION IN THE PCT-PPH PROGRAM AND PETITIONS TO MAKE THE ABOVE-IDENTIFIED APPLICATION SPECIAL UNDER THE PCT-PPH PROGRAM.

The above-identified application is (1) a national stage entry of the corresponding PCT application, or (2) a national stage entry of another PCT application which claims priority to the corresponding PCT application, or (3) a national application that claims domestic/ foreign priority to the corresponding PCT application, or (4) a national application which forms the basis for the priority claim in the corresponding PCT application, or (5) a continuing application of a U.S. application that satisfies one of (1) to (4) above, or (6) a U.S. application that claims domestic benefit to a U.S. provisional application which forms the basis for the priority claim in the corresponding PCT application.

The corresponding PCT application number(s) is/are: PCT/JP2009/000110

The international date of the corresponding PCT application(s) is/are: January 14, 2009

I. List of Required Documents:

a. **A copy of the latest international work product (WO/ISA, WO/IPEA, or IPER) in the above–identified corresponding PCT application(s)**

☑ Is attached.

☐ Is not attached because the document is already in the U.S. application.

b. **A copy of all claims which were indicated as having novelty, inventive step and industrial applicability in the above-identified corresponding PCT application(s).**

☑ Is attached.

☐ Is not attached because the document is already in the U.S. application.

c. **English translations of the documents in a. and b. above are attached (if the documents are not in the English language). A statement that the English translation is accurate is attached for the document in b. above.**

Applicants note that the provided English translation of the WO/ISR was downloaded from the WIPO web server and therefore is an accurate English translation.

This collection of information is required by 35 U.S.C. 119, 37 CFR 1.55, and 37 CFR 1.102(d). The information is required to obtain or retain a benefit by the public, which is to file (and by the USPTO to process) an application. Confidentiality is governed by 35 U.S.C. 122 and 37 CFR 1.11 and 1.14. This collection is estimated to take 2 hours to complete, including gathering, preparing, and submitting the completed application form to the USPTO. Time will vary depending upon the individual case. Any comments on the amount of time you require to complete this form and/or suggestions for reducing this burden should be sent to the Chief Information Officer, U.S. Patent and Trademark Office, U.S. Department of Commerce, P.O. Box 1450, Alexandria, VA 22313-1450. DO NOT SEND FEES OR COMPLETED FORMS TO THIS ADDRESS.

Approved for use through 01/31/2012. OMB 0651-0058
U.S.Patent and Trademark Office; U.S. DEPARTMENT OF COMMERCE

Under the Paperwork Reduction Act of 1995, no persons are required to respond to a collection of information unless it displays a valid OMB control number.

REQUEST FOR PARTICIPATION IN THE PCT-PPH PILOT PROGRAM BETWEEN THE JPO AND THE USPTO

(continued)

Application No.:	12/864,419 (050395-0481)
First Named Inventor:	Masatada NUMANO

d. **(1) An information disclosure statement listing the documents cited in the international work products (ISR, WO/ISA, WO/IPEA, IPER) of the corresponding PCT application.**

☐ Is attached

☑ Has already been filed in the above-identified U.S. application on July 23, 2010

(2) Copies of all documents (except) for U.S. patents or U.S. patent application publications)

☐ Are attached.

☑ Have already been filed in the above-identified U.S. application on July 23, 2010

II. Claims Correspondence Table:

Claims in US Application	Patentable Claims in the corresponding PCT Application	Explanation regarding the correspondence
1	1	Substantially the same
2	2	Substantially the same
3	3	Substantially the same, JP claim dependent on claims 1 and 2
4	4	Substantially the same
5	5	Substantially the same
6	6	Substantially the same
7	7	Substantially the same
8	8	Substantially the same
9	9	Substantially the same
10	10	Substantially the same
11	3	Substantially the same, JP claim dependent on claims 1 and 2
		US claim 11 dependent on claim 2 only

III. All the claims in the US application sufficiently correspond to the patentable claims in the corresponding PCT application.

Signature	Date September 22, 2010
Name (Print/Typed) Aamer S. Ahmed	Registration Number 58,958

Privacy Act Statement

The **Privacy Act of 1974 (P.L. 93-579)** requires that you be given certain information in connection with your submission of the attached form related to a patent application or patent. Accordingly, pursuant to the requirements of the Act, please be advised that: (1) the general authority for the collection of this information is 35 U.S.C. 2(b)(2); (2) furnishing of the information solicited is voluntary; and (3) the principal purpose for which the information is used by the U.S. Patent and Trademark Office is to process and/or examine your submission related to a patent application or patent. If you do not furnish the requested information, the U.S. Patent and Trademark Office may not be able to process and/or examine your submission, which may result in termination of proceedings or abandonment of the application or expiration of the patent.

The information provided by you in this form will be subject to the following routine uses:

1. The information on this form will be treated confidentially to the extent allowed under the Freedom of Information Act (5 U.S.C. 552) and the Privacy Act (5 U.S.C 552a). Records from this system of records may be disclosed to the Department of Justice to determine whether disclosure of these records is required by the Freedom of Information Act.
2. A record from this system of records may be disclosed, as a routine use, in the course of presenting evidence to a court, magistrate, or administrative tribunal, including disclosures to opposing counsel in the course of settlement negotiations.
3. A record in this system of records may be disclosed, as a routine use, to a Member of Congress submitting a request involving an individual, to whom the record pertains, when the individual has requested assistance from the Member with respect to the subject matter of the record.
4. A record in this system of records may be disclosed, as a routine use, to a contractor of the Agency having need for the information in order to perform a contract. Recipients of information shall be required to comply with the requirements of the Privacy Act of 1974, as amended, pursuant to 5 U.S.C. 552a(m).
5. A record related to an International Application filed under the Patent Cooperation Treaty in this system of records may be disclosed, as a routine use, to the International Bureau of the World Intellectual Property Organization, pursuant to the Patent Cooperation Treaty.
6. A record in this system of records may be disclosed, as a routine use, to another federal agency for purposes of National Security review (35 U.S.C. 181) and for review pursuant to the Atomic Energy Act (42 U.S.C. 218(c)).
7. A record from this system of records may be disclosed, as a routine use, to the Administrator, General Services, or his/her designee, during an inspection of records conducted by GSA as part of that agency's responsibility to recommend improvements in records management practices and programs, under authority of 44 U.S.C. 2904 and 2906. Such disclosure shall be made in accordance with the GSA regulations governing inspection of records for this purpose, and any other relevant (*i.e.*, GSA or Commerce) directive. Such disclosure shall not be used to make determinations about individuals.
8. A record from this system of records may be disclosed, as a routine use, to the public after either publication of the application pursuant to 35 U.S.C. 122(b) or issuance of a patent pursuant to 35 U.S.C. 151. Further, a record may be disclosed, subject to the limitations of 37 CFR 1.14, as a routine use, to the public if the record was filed in an application which became abandoned or in which the proceedings were terminated and which application is referenced by either a published application, an application open to public inspection or an issued patent.
9. A record from this system of records may be disclosed, as a routine use, to a Federal, State, or local law enforcement agency, if the USPTO becomes aware of a violation or potential violation of law or regulation.

STATEMENT

The undersigned hereby certifies that the attached English translation of the claims in PCT/JP2009/000110 which were indicated as having novelty, inventive step and industrial applicability in the Written Opinion of an International Searching Authority is accurate.

Signed this 18th day of June, 2010

Signature: Toshiko Okuno

Name: Toshiko OKUNO

Address: c/o Osaka Works of
SUMITOMO ELECTRIC INDUSTRIES, LTD.
1-3, Shimaya 1-chome, Konohana-ku, Osaka-shi,
Osaka, JAPAN

PATENT COOPERATION TREATY

TRANSLATION

From the
INTERNATIONAL SEARCHING AUTHORITY

To:

PCT

WRITTEN OPINION OF THE
INTERNATIONAL SEARCHING AUTHORITY

(PCT Rule 43*bis*.1)

	Date of mailing *(day/month/year)*
Applicant's or agent's file reference PCT-2008-020	FOR FURTHER ACTION See paragraph 2 below

International application No.	International filing date *(day/month/year)*	Priority date *(day/month/year)*
PCT/JP2009/000110	14.01.2009	24.01.2008

International Patent Classification (IPC) or both national classification and IPC

Applicant
SUMITOMO ELECTRIC INDUSTRIES, LTD.

1. This opinion contains indications relating to the following items:

- ☒ Box No. I — Basis of the opinion
- ☐ Box No. II — Priority
- ☐ Box No. III — Non-establishment of opinion with regard to novelty, inventive step and industrial applicability
- ☐ Box No. IV — Lack of unity of invention
- ☒ Box No. V — Reasoned statement under Rule 43*bis*.1(a)(i) with regard to novelty, inventive step or industrial applicability; citations and explanations supporting such statement
- ☐ Box No. VI — Certain documents cited
- ☐ Box No. VII — Certain defects in the international application
- ☐ Box No. VIII — Certain observations on the international application

2. FURTHER ACTION

If a demand for international preliminary examination is made, this opinion will be considered to be a written opinion of the International Preliminary Examining Authority ("IPEA") except that this does not apply where the applicant chooses an Authority other than this one to be the IPEA and the chosen IPEA has notified the International Bureau under Rule 66.1*bis*(b) that written opinions of this International Searching Authority will not be so considered.

If this opinion is, as provided above, considered to be a written opinion of the IPEA, the applicant is invited to submit to the IPEA a written reply together, where appropriate, with amendments, before the expiration of 3 months from the date of mailing of Form PCT/ISA/220 or before the expiration of 22 months from the priority date, whichever expires later.

For further options, see Form PCT/ISA/220.

3. For further details, see notes to Form PCT/ISA/220.

Name and mailing address of the ISA/JP	Date of completion of this opinion	Authorized officer
Facsimile No.		Telephone No.

WRITTEN OPINION OF THE
INTERNATIONAL SEARCHING AUTHORITY

International application No.
PCT/JP2009/000110

Box No. I **Basis of this opinion**

1. With regard to the **language**, this opinion has been established on the basis of:

   ☒ the international application in the language in which it was filed

   ☐ a translation of the international application into _____, which is the language of a translation furnished for the purposes of international search (Rules 12.3(a) and 23.1(b)).

2. ☐ This opinion has been established taking into account the **rectification of an obvious mistake** authorized by or notified to this Authority under Rule 91 (Rule 43*bis*.1(a))

3. With regard to any **nucleotide and/or amino acid sequence** disclosed in the international application and necessary to the claimed invention, this opinion has been established on the basis of:

   a. type of material

      ☐ a sequence listing

      ☐ table(s) related to the sequence listing

   b. format of material

      ☐ on paper

      ☐ in electronic form

   c. time of filing/furnishing

      ☐ contained in the international application as filed

      ☐ filed together with the international application in electronic form

      ☐ furnished subsequently to this Authority for the purposes of search

4. ☐ In addition, in the case that more than one version or copy of a sequence listing and/or table(s) relating thereto has been filed or furnished, the required statements that the information in the subsequent or additional copies is identical to that in the application as filed or does not go beyond the application as filed, as appropriate, were furnished.

5. Additional comments:

WRITTEN OPINION OF THE
INTERNATIONAL SEARCHING AUTHORITY

International application No.
PCT/JP2009/000110

Box No. V Reasoned statement under Rule 43bis.1(a)(i) with regard to novelty, inventive step or industrial applicability; citations and explanations supporting such statement

1. Statement

Novelty (N)	Claims	1-10	YES
	Claims		NO
Inventive step (IS)	Claims	1-10	YES
	Claims		NO
Industrial applicability (IA)	Claims	1-10	YES
	Claims		NO

2. Citations and explanations:

The invention as in claims 1-10 is neither disclosed in any of the documents cited in the ISR nor would it be obvious to a person skilled in the art.

特 許 協 力 条 約

発信人　日本国特許庁（国際調査機関）

代理人
山野宏
様

あて名
〒532-0011
日本国大阪府大阪市淀川区西中島六丁目１番３号
アストロ新大阪第２ビル１０階啓明特許事務所

ＰＣＴ
国際調査機関の見解書
（法施行規則第 40 条の 2）
〔ＰＣＴ規則 43 の 2.1〕

発送日 （日.月.年）	１４．０４．２００９
出願人又は代理人 の書類記号　PCT-2008-020	今後の手続きについては、下記２を参照すること。

国際出願番号	国際出願日	優先日
ＰＣＴ／ＪＰ２００９／０００１１０	（日.月.年）　１４．０１．２００９	（日.月.年）　２４．０１．２００８

国際特許分類（ＩＰＣ）Int.Cl. C22C23/02(2006.01)i, B22D11/06(2006.01)i, B22D19/14(2006.01)i, B22D21/04(2006.01)i, C22F1/06(2006.01)i, C22F1/00(2006.01)n

出願人（氏名又は名称）
住友電気工業株式会社

１．この見解書は次の内容を含む。
- ☑ 第Ｉ欄　見解の基礎
- ☐ 第Ⅱ欄　優先権
- ☐ 第Ⅲ欄　新規性、進歩性又は産業上の利用可能性についての見解の不作成
- ☐ 第Ⅳ欄　発明の単一性の欠如
- ☑ 第Ⅴ欄　ＰＣＴ規則 43 の 2.1(a)(i)に規定する新規性、進歩性又は産業上の利用可能性についての見解、それを裏付けるための文献及び説明
- ☐ 第Ⅵ欄　ある種の引用文献
- ☐ 第Ⅶ欄　国際出願の不備
- ☐ 第Ⅷ欄　国際出願に対する意見

２．今後の手続き
国際予備審査の請求がされた場合は、出願人がこの国際調査機関とは異なる国際予備審査機関を選択し、かつ、その国際予備審査機関がＰＣＴ規則 66.1 の 2(b)の規定に基づいて国際調査機関の見解書を国際予備審査機関の見解書とみなさない旨を国際事務局に通知していた場合を除いて、この見解書は国際予備審査機関の最初の見解書とみなされる。

この見解書が上記のように国際予備審査機関の見解書とみなされる場合、様式ＰＣＴ／ＩＳＡ／２２０を送付した日から３月又は優先日から２２月のうちいずれか遅く満了する期限が経過するまでに、出願人は国際予備審査機関に、適当な場合は補正書とともに、答弁書を提出することができる。

さらなる選択肢は、様式ＰＣＴ／ＩＳＡ／２２０を参照すること。

３．さらなる詳細は、様式ＰＣＴ／ＩＳＡ／２２０の備考を参照すること。

見解書を作成した日
０３．０４．２００９

名称及びあて先	特許庁審査官（権限のある職員）	４Ｋ	３７７０
日本国特許庁（ＩＳＡ／ＪＰ） 郵便番号１００－８９１５ 東京都千代田区霞が関三丁目４番３号	河口　展明 電話番号　０３－３５８１－１１０１　内線　３４３５		

様式ＰＣＴ／ＩＳＡ／２３７（表紙）（２００７年４月）

国際調査機関の見解書

国際出願番号　ＰＣＴ／ＪＰ２００９／０００１１０

第Ｉ欄　見解の基礎

１．言語に関し、この見解書は以下のものに基づき作成した。

☑ 出願時の言語による国際出願

☐ 出願時の言語から国際調査のための言語である ＿＿＿＿＿＿ 語に翻訳された、この国際出願の翻訳文（ＰＣＴ規則12.3(a)及び23.1(b)）

２．☐ この見解書は、ＰＣＴ規則 91 の規定により国際調査機関が認めた又は国際調査機関に通知された明らかな誤りの訂正を考慮して作成した（ＰＣＴ規則 43 の 2.1(b)）。

３．この国際出願で開示されたヌクレオチド又はアミノ酸配列に関して、以下に基づき見解書を作成した。

ａ．タイプ　☐ 配列表

☐ 配列表に関連するテーブル

ｂ．フォーマット　☐ 紙形式

☐ 電子形式

ｃ．提出時期　☐ 出願時の国際出願に含まれていたもの

☐ この国際出願と共に電子形式により提出されたもの

☐ 出願後に、調査のために、この国際調査機関に提出されたもの

４．☐ さらに、配列表又は配列表に関連するテーブルを提出した場合に、出願後に提出した配列若しくは追加して提出した配列が出願時に提出した配列と同一である旨、又は、出願時の開示を超える事項を含まない旨の陳述書の提出があった。

５．補足意見：

国際調査機関の見解書

国際出願番号　ＰＣＴ／ＪＰ２００９／０００１１０

第Ｖ欄　新規性、進歩性又は産業上の利用可能性についてのＰＣＴ規則43の2.1(a)(i)に定める見解、それを裏付ける文献及び説明

１．　見解

新規性（N）	請求項	１－１０	有
	請求項		無
進歩性（ＩＳ）	請求項	１－１０	有
	請求項		無
産業上の利用可能性（ＩＡ）	請求項	１－１０	有
	請求項		無

２．　文献及び説明

請求の範囲１－１０に係る発明は、国際調査報告に引用されたいずれの文献にも記載されておらず、当業者にとって自明なものでもない。

English Translation of PCT claims.

CLAIMS

1. A magnesium alloy sheet material, being a sheet material comprising magnesium alloy; wherein:

(a) the magnesium alloy forms a matrix that contains hard particles; and

(b) when in the thickness direction of the sheet material, a region from each surface of the sheet material to a position away from the surface by 40% of the thickness of the sheet material is defined as a surface region and the remaining region is defined as the center region, hard particles existing in the center region have a maximum diameter of more than 20 μm and less than 50 μm and hard particles existing in the surface region have a maximum diameter of 20 μm or less.

2. The magnesium alloy sheet material as defined by claim 1, wherein the hard particles existing in the surface region have a maximum diameter of 5 μm or less.

3. The magnesium alloy sheet material as defined by claim 1 or 2, wherein the sheet material is already subjected to a rolling processing with a total rolling reduction of 20% or more.

4. The magnesium alloy sheet material as defined by claim 1, wherein the matrix forming the surface region comprises a magnesium alloy that contains aluminum with a content of 2.5 mass % or more and less than 6.5 mass % and that contains silicon and calcium with a content of 0.5 mass % or less in total.

5. The magnesium alloy sheet material as defined by claim 1, wherein the matrix forming the surface region comprises a magnesium alloy that contains aluminum with a content of 6.5 mass % or more and 20 mass % or less and that contains silicon and calcium with a content of 0.5 mass % or less in total.

6. The magnesium alloy sheet material as defined by claim 1, wherein the hard particles existing in the center region account for 0.5 vol. % or more and less than 15 vol. % of the total volume of the sheet material.

7. The magnesium alloy sheet material as defined by claim 1, wherein the hard particles existing in the center region comprises precipitated substances.

8. The magnesium alloy sheet material as defined by claim 1, wherein the sheet material is provided with a covering layer on its surface.

9. A magnesium alloy formed body, being formed by performing a plastic processing on the magnesium alloy sheet material as defined by claim 1.

10. The magnesium alloy formed body as defined by claim 9, the formed body being provided with a covering layer on its surface.

(12) 特許協力条約に基づいて公開された国際出願

(19) 世界知的所有権機関
国際事務局

(43) 国際公開日
2009年7月30日 (30.07.2009)

PCT

(10) 国際公開番号
WO 2009/093420 A1

(51) 国際特許分類:
C22C 23/02 (2006.01) *B22D 21/04* (2006.01)
B22D 11/06 (2006.01) *C22F 1/06* (2006.01)
B22D 19/14 (2006.01) *C22F 1/00* (2006.01)

(21) 国際出願番号: PCT/JP2009/000110

(22) 国際出願日: 2009年1月14日 (14.01.2009)

(25) 国際出願の言語: 日本語

(26) 国際公開の言語: 日本語

(30) 優先権データ:
特願2008-014210 2008年1月24日 (24.01.2008) JP

(71) 出願人 (米国を除く全ての指定国について): 住友電気工業株式会社 (SUMITOMO ELECTRIC INDUSTRIES, LTD.) [JP/JP]; 〒5410041 大阪府大阪市中央区北浜四丁目5番33号 Osaka (JP).

(72) 発明者; および

(75) 発明者/出願人 (米国についてのみ): 沼野正禎 (NUMANO, Masatada) [JP/JP]; 〒5540024 大阪府大阪市此花区島屋一丁目1番3号住友電気工業株式会社大阪製作所内 Osaka (JP). 河部望 (KAWABE, Nozomu) [JP/JP]; 〒5540024 大阪府大阪市此花区島屋一丁目1番3号住友電気工業株式会社大阪製作所内 Osaka (JP). 大石幸広 (OISHI, Yukihiro) [JP/JP]; 〒5540024 大阪府大阪市此花区島屋一丁目1番3号住友電気工業株式会社大阪製作所内 Osaka (JP). 森信之 (MORI, Nobuyuki) [JP/JP]; 〒5540024 大阪府大阪市此花区島屋一丁目1番3号住友電気工業株式会社大阪製作所内 Osaka (JP). 奥田伸之 (OKUDA, Nobuyuki) [JP/JP]; 〒5540024 大阪府大阪市此花区島屋一丁目1番3号住友電気工業株式会社大阪製作所内 Osaka (JP). 井上龍一 (INOUE, Ryuichi) [JP/JP]; 〒5540024 大阪府大阪

[続葉有]

(54) Title: MAGNESIUM ALLOY SHEET MATERIAL

(54) 発明の名称: マグネシウム合金板材

[図2]

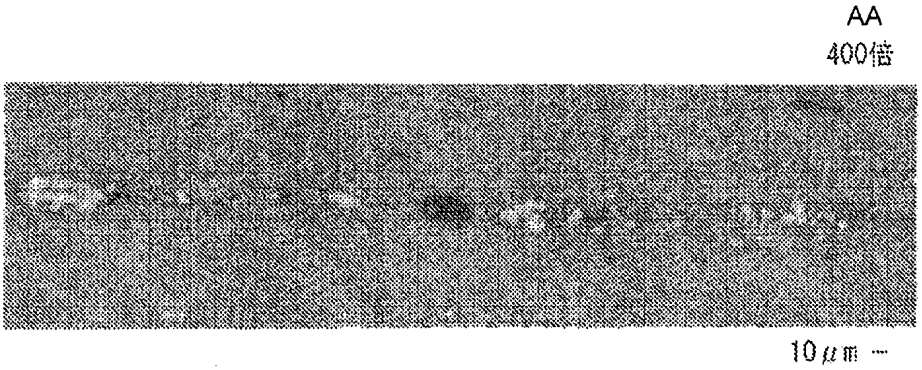

AA ×400

(57) Abstract: Provided are: a magnesium alloy sheet material excellent in suitability for plastic working and rigidity; and a magnesium alloy molding having excellent rigidity. The sheet material is made of a magnesium alloy and comprises a matrix made of the magnesium alloy and rigid particles contained in the matrix. When the region ranging in the thickness direction from each surface of this sheet material to 40% of the thickness of the sheet material is referred to as a surface region and the remaining region is referred to as a central region, then the rigid particles present in the central region have a maximum diameter of 20-50 μm, excluding 20 μm and 50 μm, and the rigid particles present in the surface regions have a maximum diameter of 20 μm or smaller. Since the surface-side rigid particles are fine, these particles are less apt to become starting points for cracking or the like in plastic working. The presence of coarse particles in the central part can heighten the rigidity of the sheet material.

(57) 要約: 塑性加工性及び剛性に優れるマグネシウム合金板材、及び剛性に優れるマグネシウム合金成形体を提供する。マグネシウム合金からなる板材であっ

[続葉有]

WO 2009/093420 A1

市此花区島屋一丁目１番３号住友電気工業株式会社大阪製作所内 Osaka (JP).

(74) 代理人: 山野宏 (YAMANO, Hiroshi); 〒5320011 大阪府大阪市淀川区西中島六丁目１番３号 アストロ新大阪第２ビル１０階啓明特許事務所 Osaka (JP).

(81) 指定国 (表示のない限り、全ての種類の国内保護が可能): AE, AG, AL, AM, AO, AT, AU, AZ, BA, BB, BG, BH, BR, BW, BY, BZ, CA, CH, CN, CO, CR, CU, CZ, DE, DK, DM, DO, DZ, EC, EE, EG, ES, FI, GB, GD, GE, GH, GM, GT, HN, HR, HU, ID, IL, IN, IS, KE, KG, KM, KN, KP, KR, KZ, LA, LC, LK, LR, LS, LT, LU, LY, MA, MD, ME, MG, MK, MN, MW, MX, MY, MZ, NA, NG, NI, NO, NZ, OM, PG, PH, PL, PT, RO, RS, RU, SC, SD, SE, SG, SK, SL, SM, ST, SV, SY, TJ, TM, TN, TR, TT, TZ, UA, UG, US, UZ, VC, VN, ZA, ZM, ZW.

(84) 指定国 (表示のない限り、全ての種類の広域保護が可能): ARIPO (BW, GH, GM, KE, LS, MW, MZ, NA, SD, SL, SZ, TZ, UG, ZM, ZW), ユーラシア (AM, AZ, BY, KG, KZ, MD, RU, TJ, TM), ヨーロッパ (AT, BE, BG, CH, CY, CZ, DE, DK, EE, ES, FI, FR, GB, GR, HR, HU, IE, IS, IT, LT, LU, LV, MC, MK, MT, NL, NO, PL, PT, RO, SE, SI, SK, TR), OAPI (BF, BJ, CF, CG, CI, CM, GA, GN, GQ, GW, ML, MR, NE, SN, TD, TG).

添付公開書類:
— 国際調査報告書

て、マグネシウム合金からなる母材中に硬質粒子を含有している。この板材の表面から厚さ方向に板材の厚さの40%までの領域を表面領域とし、残部の領域を中央領域とするとき、中央領域に存在する硬質粒子は、その最大径が20μmを超えて50μm未満であり、表面領域に存在する硬質粒子は、最大径が20μm以下である。表面側の硬質粒子が微粒であることで、これら粒子が塑性加工時に割れなどの起点になり難く、かつ、中心部分に粗大な粒子が存在することで、これら粒子により板材の剛性を高められる。

明 細 書

マグネシウム合金板材

技術分野

[0001] 本発明は、マグネシウム合金板材、及びこの板材に塑性加工を施してなる成形体に関するものである。特に、塑性加工性に優れると共に剛性が高いマグネシウム合金板材に関する。

背景技術

[0002] マグネシウムに種々の添加元素を含有したマグネシウム合金が、携帯電話やノートパソコンといった携帯電気機器類の筐体や自動車部品などに利用されてきている。マグネシウム合金は、六方晶の結晶構造(hcp構造)を有するため常温での塑性加工性に乏しいことから、上記筐体などのマグネシウム合金製品は、ダイカスト法やチクソモールド法による鋳造材が主流である。

[0003] マグネシウム合金の塑性加工性を向上するために、特許文献1では、マグネシウム合金の結晶粒内に$25\times10^{-12}\pi m^2$以上$2500\times10^{-12}\pi m^2$以下(面積相当円直径10～100μm)の析出物を複数分散させることを提案している。また、特許文献2は、マグネシウム合金中の晶析出物の最大径を20μm以下と微細にすることで塑性加工性(成形性)に優れることを開示している。

[0004] 特許文献1：特開2003-239033号公報

特許文献2：国際公開第06/003899号パンフレット

発明の開示

発明が解決しようとする課題

[0005] 一般的な塑性加工において、クラックの発生が起き難い代表的な加工として鍛造加工が挙げられる。この鍛造加工でも、析出物の最大径は20μm以下が好ましいと考えられる。しかし、特許文献1に記載されるマグネシウム合金素形材は、その全体に亘って均一的に析出物を存在させており、表面側に比較的粗大な析出物が存在する恐れがある。素材の表面側に20μmを超える粗大な析出物が存在すると、塑性加工時に割れなどが生じ易くなり、塑性加工性が

低下する。

[0006] 一方、特許文献2に記載されるマグネシウム合金材は、その全体に亘って晶析出物を存在させているものの、その最大径が20μm以下であるため、塑性加工時に割れなどが生じ難く、塑性加工性に優れる。しかし、軽量化のためなどでマグネシウム合金材の厚さをより薄くした場合、剛性が小さくなり、衝撃を受けた際にマグネシウム合金材が凹むなどの変形を生じる恐れがある。

[0007] そこで、本発明の目的の一つは、塑性加工性及び剛性の双方に優れるマグネシウム合金板材を提供することにある。また、本発明の他の目的は、剛性に優れるマグネシウム合金成形体を提供することにある。

課題を解決するための手段

[0008] 板材を曲げた場合、曲げの内側に位置する一方の表面側には圧縮応力が作用し、曲げの外側に位置する他方の表面側には引張応力が作用する。例えば、析出物といった粒子が存在する板材であって、その表面側に粗大な析出物が存在すると、上記応力が作用したときに割れの起点となり易い。しかし、この板材の厚さ方向における中心及びその近傍は、実質的に上記応力が働かない、或いは作用する応力が表面側と比較して小さい。そのため、板材の中心及びその近傍部分に比較的粗大な析出物が存在しても、割れなどが生じ難いと考えられる。また、析出物は、母材であるマグネシウム合金自体と比較して剛性が高い、換言すると弾性率が大きいことから、このような高剛性物が板材の中心及びその近傍に存在することで、板材の剛性を高められる。特に、この高剛性物がある程度粗大であると、板材の剛性を効果的に高められる。この知見に基づき、本発明板材は、表面側と中心部分とで大きさが異なる粒子が存在するものとする。

[0009] 本発明マグネシウム合金板材は、マグネシウム合金からなる母材中に、母材の合金よりも弾性率が高い硬質粒子を含有する。この板材の厚さ方向において、板材の各表面から板材の厚さの40%までの領域を表面領域とし、残部の領域を中央領域とするとき、中央領域に存在する硬質粒子の最大径は20μmを超えて50μm未満であり、表面領域に存在する硬質粒子の最大径は20μm以

下である。最大径の測定方法は後述する。

[0010] 本発明板材は、表面領域に存在する硬質粒子の最大径が20μm以下と小さいため、硬質粒子が塑性加工時に割れなどの起点となり難く、塑性加工性に優れる。かつ、本発明板材は、中央領域に剛性が高く比較的大きな粒子、特に、表面領域に存在する粒子よりも大きな粒子が存在するが、この中央領域は、曲げなどを加えた際に応力が作用し難い箇所であるため、塑性加工性を阻害し難い。また、本発明板材は、中央領域に上記粗大な粒子が存在することで、板材の剛性を高められる。以下、本発明をより詳細に説明する。

[0011] [マグネシウム合金板材]

<マグネシウム合金>

本発明板材は、実質的にマグネシウム合金と硬質粒子とで構成される。マグネシウム合金は、50質量%超のマグネシウム(Mg)と添加元素と不可避的不純物とで構成される合金であり、添加元素としては、例えば、アルミニウム(Al),亜鉛(Zn),マンガン(Mn)が挙げられる。Alを含有するマグネシウム合金は、耐食性に優れる。特に、Alを2.5質量%以上6.5質量%未満含有する場合、塑性加工が行い易く、6.5質量%以上20質量%以下含有する場合、耐食性がより高い。2.5質量%以上であると、後述するように硬質粒子を析出物とする場合、析出物が生成され易く、20質量%以下とすることで、塑性加工性の低下を抑制する。Alに加えてZn,Mnといった元素を含有するマグネシウム合金は、マグネシウム単体よりも強度や伸びといった機械的特性や耐食性に優れる。このようなマグネシウム合金として、ASTM規格のAZ系合金やAM系合金、具体的には、AZ31,AZ61,AZ63,AZ80,AZ81,AZ91やAM60,AM100などが挙げられる。添加元素の含有量を調整することで、所望の特性を有するマグネシウム合金とすることができる。

[0012] 上記マグネシウム合金は、シリコン(Si)及びカルシウム(Ca)の含有量ができるだけ少ない方が好ましい。Si及びCaが少ないと、耐食性が劣化し難く、耐熱性の向上に伴う成形温度の高温化なども生じ難い。具体的には、合計で0.5質量%以下が好ましい。

[0013] 表面領域を構成する母材のマグネシウム合金と、中央領域を構成する母材のマグネシウム合金とは異なる組成でもよいし、同一組成でもよい。例えば、表面領域を塑性加工性に優れるAZ31とし、中央領域を防食性に優れるAZ91にしてもよい。

[0014] ＜硬質粒子＞

《組成》

硬質粒子は、母材であるマグネシウム合金(例えば、AZ91:弾性率45GPa)よりも弾性率が高いものとする。このような硬質粒子として、例えば、$Al_{17}Mg_{12}$といったAl-Mg系析出物、その他Al-Mn系析出物、Mg-Zn系析出物などの金属間化合物が挙げられる。これら金属間化合物は、200GPa程度の弾性率を持つと考えられる。その他の硬質粒子として、マグネシウムと反応し難い化合物、例えば、炭化珪素(SiC:弾性率260GPa)、窒化アルミニウム(AlN:弾性率200GPa)、窒化ホウ素(BN:弾性率369GPa)といったセラミックスや、ダイヤモンド(C:弾性率444GPa)などの単一元素物質が挙げられる。これらセラミックス粒子や単一元素粒子は、金属間化合物である析出物よりも弾性率が高く、板材の剛性をより高められる。

[0015] 《硬質粒子を板材に存在させる方法》

硬質粒子を析出によって生成する場合、本発明板材の製造条件を調整することで硬質粒子(析出物)を生成する。この場合、別途、粒子材料を準備する必要がない。マグネシウム合金の母材に硬質粒子を存在させる別の方法としては、例えば、硬質粒子を上述のマグネシウムと反応し難い化合物や物質とする場合、板材の中央領域に硬質粒子が存在し得る範囲でこれら化合物や物質を溶解中の母材の任意の場所に挿入して母材に混合することで、剛性に優れる本発明板材を製造することができる。本発明板材は、析出物からなる粒子とセラミックスからなる粒子とが混在していてもよい。また、中央領域に存在する硬質粒子と、表面領域に存在する硬質粒子とが異なる組成からなるものでもよい。

[0016] 《弾性率》

本発明板材は、剛性を高めるために母材よりも硬度が高い硬質粒子を含有する。板材の剛性をより高めるためには、硬質粒子は、母材の硬度の2倍以上、更に10倍以上であることが好ましい。また、硬質粒子は、その弾性率が50GPa以上であることが望ましい。弾性率が50GPa以上であると、板材の剛性を高める効果が大きく、弾性率が高いほど同効果が得られるため、100GPa以上がより好ましい。

[0017] 板材の製造時の反応により硬質粒子を生成する場合、板材中の硬質粒子は、その構成物の組成比や結晶構造によって弾性率が異なる可能性がある。従って、板材製造後、板材中の硬質粒子の弾性率を適宜測定して、確認するとよい。弾性率の測定方法としては、例えば、作製した板材の中央領域を機械加工などで取り出し、薬液にて母相(マグネシウム合金)を溶解した後の残渣を用いて、硬質粒子の体積の測定と、中央領域の曲げ試験による弾性測定とを行い、これら測定結果の複合則による方法を採用することができる。この複合則による方法で所望の精度が得られ難い場合は、上述の残渣の物性値をマイクロビッカース硬度計などで直接測定してもよい。一方、溶解中の母材に硬質粒子となる原料粒子を挿入する場合は、予め原料粒子の弾性率を測定しておくことが可能であり、材料設計が行い易い。このとき、原料粒子の選定は、弾性率で行えるが、原料粒子が微細であるなどしてで弾性率の測定が難しい場合は、例えば、鋳造材の母相(マグネシウム合金)を薬液により溶解して残渣(粒子)の硬度を測定することで弾性率を推定することができる。

[0018] 《大きさ》

本発明板材は、表面側に存在する硬質粒子と、内部に存在する硬質粒子との大きさ(最大径)が異なることを最大の特徴とする。まず、板材の厚さ方向において板材の各表面から板材の厚さの40%以上離れた領域、つまり、板材の厚さ方向の中心を含む板材の厚さの20%の領域を中央領域とし、板材の各表面から板材の厚さの40%未満の領域、つまり、中央領域を挟むように存在する領域であって、板材の表面を含む板材の厚さの40%までの領域をそれぞれ表面領域とする。析出物やセラミックスは、伸びといった靭性が低いもの

が多く、硬質粒子がこのような析出物などから構成される場合、中央領域を大きくし過ぎると、塑性加工性が低下する恐れがある。そこで、本発明板材では、板厚の20%の領域を中央領域とするが、中央領域を板厚の10%の領域、即ち、表面領域を板材の表面から板厚の45%までの領域とすると、更に塑性加工性に優れて好ましい。そして、表面領域に存在する硬質粒子(以下、表面粒子と呼ぶ)は、塑性変形性を阻害しないように最大径を20μm以下とする。硬質粒子の最大径は、板材の厚さ方向の最大長さとする。表面粒子は、できるだけ小さい方が好ましく、5μm以下がより好ましい。特に、板材の耐食性や塗装性といった意匠性を考慮すると、板材の最表面に露出する硬質粒子はできる限り少なく、かつその最大径は5μm以下が好ましく、1μm以下がより好ましい。また、上記意匠性を考慮すると、板材の最表面に硬質粒子が実質的に存在しないことが好ましい。なお、実際の使用に際し、板材の表面が平滑でない場合、切削や研磨などの修正加工が行われることがある。この場合、修正加工後において、中央領域及び表面領域を決定する。

[0019] ここで、マグネシウム合金を鋳造すると、通常、析出物が析出される。従って、表面粒子を析出物とする場合、製造条件を制御することで、表面粒子の大きさを上記所定の大きさに調整することができる。更に、セラミックス粒子を表面粒子に含む場合、上記所定の範囲内のセラミックス粒子を用いるとよい。また、表面粒子は、表面領域の全域に亘って均一的に分散していてもよいし、表面に近いほど少なくなるように、即ち、中心に向かって多くなるように傾斜的に存在していてもよい。分散状態は、例えば、製造条件を制御することで調整することができる。詳しい制御方法は後述する。

[0020] 一方、中央領域に存在する硬質粒子(以下、内部粒子と呼ぶ)は、剛性を高めるために、最大径を20μm超とする。内部粒子は、大きい方が剛性を高められるが、大き過ぎると、塑性加工性を低下させるため、50μm未満とする。好ましくは、20μm超40μm以下である。

[0021] 《含有量》

表面粒子の含有量は、板材の総体積に占める割合が0.5体積%以上15体積%

以下が好ましい。表面粒子の含有量が上記範囲を満たすことで、中央領域との材料特性の差を小さくして、板材の塑性加工性の低下を抑制することができる。一方、中央領域ではある程度硬質粒子が存在しないと、十分に剛性を高められず、多過ぎると、脆弱になり易い。内部粒子の具体的な含有量は、板材の総体積に占める割合が0.5体積%以上15体積%未満であることが好ましい。硬質粒子を析出物からなるものとする場合、マグネシウム合金の組成を調整したり、製造条件を制御することで硬質粒子の含有量を調整することができ、硬質粒子をセラミックス粒子からなるものとする場合、混合量を調整することで硬質粒子の含有量を調整することができる。

[0022] 《形態》

本発明板材は、鋳造材、この鋳造材に圧延や押出といった1次塑性加工、更に熱処理を施した1次加工材が代表的な形態である。上記鋳造材は、表面側の硬質粒子が微粒であり、比較的粗大な硬質粒子が実質的に表面領域に存在しないため、圧延などの際に割れなどが生じ難く、塑性加工性に優れる。また、このような鋳造材に1次塑性加工を施すことで、鋳造時の欠陥などを除去して、表面性状を向上できる。特に、総圧下率30%以上の圧延加工を施した板材は、表面性状が高められるだけでなく、引張強度や伸びといった機械的特性が鋳造材よりも優れる。鋳造材に圧延などの塑性加工を施すと歪みが導入されるため、本発明板材は、塑性加工後、歪み除去を目的とする熱処理を施したものでもよい。得られた1次加工材も鋳造材と同様に塑性加工性に優れ、プレス加工や鍛造加工といった2次塑性加工時に割れなどが生じ難い。

[0023] 《厚さ》

本発明板材は、製造条件を調整することで種々の厚さを有する。特に、圧延などを施すことで1mm以下の薄板とすることができる。そして、本発明板材は、中央領域に比較的粗大な内部粒子が存在することで剛性が高められ、上述のように薄板としても、凹みなどの変形が生じ難い。

[0024] 《被覆層》

本発明板材は、その表面に被覆層を具えていてもよい。被覆層は、代表的

には、防食処理(化成処理又は陽極酸化処理)による防食被膜と、装飾などを目的とした塗装膜とが挙げられる。防食被膜を具えると、耐食性を高められ、塗装膜を具えると、商品価値を高められる。本発明板材に塑性加工を施す場合、防食被膜は、塑性加工により損傷し難いので、塑性加工前に形成してもよいし、塑性加工後に形成してもよい。塑性加工前に防食被膜を具えると、塑性加工時に防食被膜が潤滑剤として機能する傾向にある。塗装膜は、塑性加工により損傷する恐れがあるため、塑性加工後に形成することが好ましい。

[0025] [成形体]

圧延などの1次塑性加工が施された1次加工材(本発明板材)にプレス加工や鍛造加工といった2次塑性加工を施すことで、本発明マグネシウム合金成形体が得られる。この本発明成形体は、本発明板材と同様に中央領域に比較的粗大な内部粒子が存在するため、剛性が高く、変形などが生じ難い。

[0026] 本発明成形体は、被覆層を具えていてもよい。被覆層は、特に防食被膜と塗装膜とを具えるものが好ましい。

[0027] [製造方法]

本発明マグネシウム合金板材を鋳造材とする場合、例えば、以下の製造方法により製造することができる。

＜鋳造材の製造＞

《両領域における硬質粒子を析出物とする場合》

本発明マグネシウム合金板材に存在する硬質粒子を析出物からなるものとする場合、例えば、マグネシウム合金からなる溶湯を準備する工程と、この溶湯を鋳造して板材とする工程とを具え、鋳造工程において、溶湯表面の冷却速度が50K/秒以上1000K/秒以下となるように冷却を行うと共に、最終凝固に要する時間を制御する。端的に言うと、表面側と中心部分とで温度差を設けて溶湯を凝固する。特に、表面側を急冷することで、表面側に粗大な析出物が析出されることを防止し、かつ内部がゆっくり冷却されるように凝固時間を制御することで、板材の厚さ方向の中心及びその近傍に粗大な析出物が

析出されるようにする。凝固時間の制御は、例えば、鋳造速度を調整することで行える。

[0028] なお、冷却速度を遅くすると、中央偏析が生じる。この中央偏析は、板材の長手方向及び幅方向に分散的に存在し、通常、欠陥として取り扱う。これに対し、上述のように冷却速度や鋳造速度を制御することで、中央偏析を制御し、比較的粗大な析出物が板材の長手方向及び幅方向に連続的に繋がるように板材を形成する。従って、析出物からなる硬質粒子の大きさが、厚さ方向以外の方向、例えば、長手方向や幅方向に大きく成り得るが、本発明では、硬質粒子の厚さ方向の大きさを径とする。また、硬質粒子における板厚方向に垂直な方向(長手方向、幅方向)の大きさが大き過ぎると、硬質粒子と母材との界面で剥離が生じるなどして割れの起点となり易くなる。従って、硬質粒子における板厚方向に垂直な方向の最大値は、2mm以下が好ましい。特に、引張強さの低下を抑制しつつ剛性を高めるには、硬質粒子の最大径(板厚方向の最大長さ)と、硬質粒子が最も大きい方向(厚さ方向、長手方向及び幅方向のいずれかの方向)の最大値とのアスペクト比が1:10以下であることが望ましい。剛性をより高めるには、上記アスペクト比は、1:20以上が好ましいが、この場合、体積に対する粒子数が少なくなって塑性加工時の応力の分散点が減少することで、引張強さが低下する傾向にある。

[0029] 鋳造は、可動鋳型を用いる双ロール法(ツインロール法)、双ベルト法(ツインベルト法)、車輪ベルト法(ベルトアンドホイール法)といった連続鋳造法で行うことが好ましい。これらの鋳造法は、鋳型面(溶湯と接触する面)の位置を一定に保持し易く、鋳型の回転に伴って溶湯に接触する面が連続的に現れる構成であるため、上記冷却速度や鋳造速度を所定の範囲に制御し易い。また、可動鋳型の作製精度が高いため、鋳造材を高精度に製造できる。更に、鋳造は、溶湯を垂直方向に移動させる垂直式鋳造でも、溶湯を水平方向に移動させる水平式鋳造でもよい。

[0030] 上記鋳造工程において凝固材の表面側部分(主として板材の表面領域を形成する部分)の冷却速度を50K/秒以上とすることで、板材の表面側に最大径が20

μmを超える粗大な析出物が析出されることを抑え、上記表面側部分が凝固し始めてから、凝固材の中央部分(主として板材の中央領域を形成する部分)の凝固が完了するまでの時間を0.1秒以上とすることで、板材の中心部分に最大径が20μmを超える粗大な析出物を存在させ易く、剛性を十分に向上できる。冷却速度は、凝固材(溶湯)の組成に応じて適宜選択することができるが、好ましくは、200K/秒以上1000K/秒以下である。冷却速度の調整は、鋳造材の目標板厚や、溶湯や可動鋳型の温度、可動鋳型の駆動(回転)速度、鋳型と溶湯との接触長などを調整したり、可動鋳型の材質などを適宜選択したり、鋳型の表面状態や冷却剤、離型剤などを調整することで行うことができる。

[0031] 鋳造速度は、鋳造材の大きさや組成、冷却速度などを考慮して適宜選択することができる。鋳造速度が遅過ぎると、鋳造材の中心部分も上記表面側と同程度の冷却速度で冷却されてしまい、20μmを超える析出物を存在させ難くなり、速過ぎると中心部分の冷却が遅くなることで50μmを超える非常に粗大な析出物が存在する恐れがある。

[0032] 上述のように冷却速度や鋳造速度を制御して、可動鋳型から排出された際に溶湯の凝固が完了していないようにする。つまり、可動鋳型から排出された時点で、溶湯の表面側は凝固され中心部分は未凝固状態とし、中心部分は、鋳型から排出後、除冷により凝固するように冷却速度、鋳造速度を制御する。例えば、可動鋳型を一対のロールとする場合、ロール間が最も接近する最小ギャップを溶湯が通過する際、即ち、ロールの回転軸を含む平面と注湯口の先端間(オフセット区間)内に凝固完了点が存在しないように溶湯を凝固させ、中央領域に大きな析出物を生成する。例えば、鋳型から放出された段階で凝固材の全体が固化されないようにする。このとき、例えば、可動鋳型を一対のロールとする場合、両ロール間を通過する凝固材は、内部が凝固していないことで、鋳造荷重が比較的小さくなる。

[0033] 《中央領域における硬質粒子が析出物以外のものを含む場合》

析出物以外からなる硬質粒子、例えば、セラミックス粒子からなる硬質粒子を含有する本発明板材は、セラミックス粒子とマグネシウム合金との混合

溶湯を用いることで製造可能である。より具体的には、所望のセラミックス粒子と、所望の組成のマグネシウム合金からなる溶湯とを混合した混合溶湯を準備し、表面領域を構成するマグネシウム合金からなる母材溶湯で上記混合溶湯を挟むようにして同時に鋳造する。このとき、上述した製造方法と同様に、冷却速度や鋳造速度を制御する。得られた板材は、中央領域がマグネシウム合金とセラミックス粒子との複合材料からなる。このように所望の硬質粒子を用いることで、粒子の組成や大きさを簡単に変化させることができる。

[0034] 《鋳造材の厚さ》

鋳造材の厚さは、3mm以上5mm以下が好ましい。厚さがこの範囲であると、安定して長尺材を形成できると共に、所望の組織に制御し易い。

[0035] ＜熱処理＞

得られた鋳造材に、組成の均質化や、塑性加工性を向上する目的で鋳造組織を再結晶組織とするための熱処理や時効処理、その他、後述するように析出物などの粒子の大きさを調整するために、熱処理を施してもよい。粒子の大きさを調整する熱処理の具体的な条件は、後述する。温度や時間は、合金組成によって適宜選択するとよい。

[0036] ＜1次塑性加工＞

上記鋳造材(鋳造後熱処理が施されたものを含む)は、圧延や押出などの塑性加工性に優れており、このような塑性加工を施すことで、表面性状を改善したり、引張強度や伸びといった機械的特性を向上できる。特に、総圧下率20%以上の圧延を施すと、鋳造組織を実質的に圧延組織(再結晶組織)とすることができる。より好ましい総圧下率は30%以上である。圧延は1パス以上行い、1パスあたりの圧下率は、3～30%が好ましく、更に7～20%とすると、圧延材の縁部の割れが小さく、或いは同割れが生じ難く、平滑性に優れる圧延材が得られてより好ましい。また、圧延の際、被加工材の表面温度を150～350℃、ロールの温度を150～350℃にしておくと、割れなどが生じ難く加工性を高められると共に、加工時の熱による結晶組織の粗大化を抑制して、プレス

加工や鍛造加工などの2次加工性に優れる圧延材が得られる。得られた1次加工材(代表的には圧延材)の両領域に存在する硬質粒子の大きさは、鋳造材のときとほぼ同じ大きさ、或いは塑性加工により粉砕されてより細かい。1次加工材の厚さは、例えば、0.4mm以上4.8mm以下が挙げられる。所望の厚さになるように鋳造材に圧延などを施す。

[0037] 上記圧延などの1次塑性加工は、鋳造に引き続いて連続的に行うと、鋳造材が有する余熱を利用できてエネルギー効率に優れる。なお、連続鋳造に引き続いて1次塑性加工を行わない場合は、1次塑性加工前に被加工材に250～600℃かつ被加工材の構成材料の固相線温度以下の温度で30分以上50時間以下程度の比較的長時間の熱処理を施すと、塑性加工性を高めて1次塑性加工時に被加工材が割れたり、変形することを防止できる。被加工材の構成材料の組成によっては、この熱処理を行わなくてもよい。

[0038] 1次塑性加工を複数パスに亘って行う場合、所定パスごとに被加工材に熱処理を施したり、得られた1次加工材に熱処理を行うと、1次加工により導入された残留応力や歪みを除去して、機械的特性の向上を図ったり、2次塑性加工性を高められる。熱処理条件は、加熱温度:100～600℃かつ被加工材の構成材料の固相線温度以下、加熱時間:5分～5時間程度が挙げられる。

[0039] 上記圧延や圧延後に熱処理が施された圧延材において特に表面領域は、平均粒径が0.5μm以上30μm以下といった微細な結晶組織を有しており、2次塑性加工性に優れる。平均粒径は、圧延材の断面において、JIS G 0551に定められた切断法によって表面領域の結晶粒径を求め、その平均値を用いる。平均粒径は、圧延条件(総圧下率や温度など)、熱処理条件(温度や時間など)を調整することで変化させることができる。

[0040] 得られた1次加工材に被覆層、特に防食被膜を形成してから後述する2次塑性加工を施してもよい。

[0041] <2次塑性加工>

上記1次加工材(塑性加工後に熱処理されたものも含む)は、プレス加工や鍛造加工といった塑性加工性に優れており、このような塑性加工を施して得ら

れた成形体は、軽量が望まれる種々の分野に好適に利用できる。特に、この成形体は、厚さが0.3～1.2mm程度と薄くても剛性が高いため、撓んだり変形などが生じ難く、商品価値が高い。なお、成形体の厚さは、成形体全体に亘って均一的でなくても構わない。塑性加工により部分的に薄くなったり厚くなった部分を含んでいてもよい。

[0042] 2次塑性加工は、1次加工材を室温以上500℃未満に加熱して、塑性加工性を高めた状態で行うことが好ましく、加工後に熱処理を施すことが好ましい。熱処理条件は、加熱温度:200～450℃、加熱時間:5分～40時間程度が挙げられる。2次塑性加工が施された2次加工材に被覆層を形成し、被覆層を具える成形体とすると、防食性や商品価値を高められる。1次加工材が防食被膜を具える場合、2次塑性加工時において防食被膜が潤滑剤として機能して、加工が行い易くなる。更に、塗装膜を形成する場合は、2次塑性加工後に形成すると、2次塑性加工時に塗装膜が損傷することを防止できて好ましい。或いは、1次加工材に2次塑性加工を施した後、防食被膜、塗装膜を順に形成してもよい。

発明の効果

[0043] 本発明マグネシウム合金板材は、塑性加工性に優れると共に、剛性に優れる。本発明マグネシウム合金成形体は、剛性に優れ、変形し難い。

図面の簡単な説明

[0044] [図1]混合溶湯と表面溶湯とを用いて本発明板材を製造するときに用いる連続鋳造装置を示す模式説明図である。

[図2]試料No.5の断面顕微鏡写真である。

[図3]実施形態で作製した試料の高温域での伸びを示すグラフである。

符号の説明

[0045] 10 連続鋳造装置 11 溶解保持炉 12 隔壁 13 出湯口 14 冷却機構

20 混合溶湯 21 表面溶湯

発明を実施するための最良の形態

[0046] 以下、本発明の実施の形態を説明する。

種々の組成のマグネシウム合金、及び適宜セラミックス粒子を用いて鋳造材を作製し、得られた鋳造材に適宜圧延を施して、種々の特性を調べた。

[0047] 鋳造材は、以下のように作製した。表1に示す組成のマグネシウム合金(残部Mg)の溶湯を準備し、用意した溶湯を表1に示す条件で連続鋳造して鋳造材(幅200mm)を作製する。厚さは、適宜異ならせている。

[0048] [表1]

試料No.	1	2	3	4	5	6	7	8	9
母材組成(質量%)	Al:3.0% Zn:0.7%	Al:3.0% Zn:0.7%	Al:3.0% Zn:0.7%	Al:6.0% Zn:0.7%	Al:9.0% Zn:0.7%	Al:9.0% Zn:0.7%	Al:3.0% Zn:0.7%	Al:9.0% Zn:0.7%	Al:3.0% Zn:0.7%
添加した硬質粒子	-	-	-	-	-	-	SiC	SiC	SiC
表面側冷却速度(K/sec)	10	50	500	500	500	1000	50	500	50
鋳造速度(mm/sec)	0.75	3.75	37.5	37.5	37.5	75	3.75	37.5	3.75

[0049] 試料No.1～6の鋳造材は、溶湯を作製する溶解炉と、溶解炉からの溶湯を一時的に貯留する湯だめ(タンディッシュ)と、溶解炉と湯だめ間に配置される移送樋と、湯だめからの溶湯を可動鋳型に供給する注湯口と、供給された溶湯を鋳造する可動鋳型とを具える連続鋳造装置を用いて作製する。ここでは、双ロール鋳造装置を用いる。溶解炉、移送樋、注湯口などの外周には、溶湯の温度を維持できる加熱手段を具えることが好ましい。また、鋳造は、マグネシウム合金が酸素と結合し難いように酸素が5体積%未満の低酸素雰囲気、例えば、アルゴン、窒素、及び二酸化炭素から選択される1種からなる雰囲気が好ましい。混合雰囲気でもよい。更に、SF_6やハイドロフロロカーボンなどを0.1～1.0体積%程度含めて防燃性を高めてもよい。後述する試料No.7～9についても同様である。なお、フッ素や硫黄でマグネシウム合金溶湯の表面にフッ化皮膜や硫化皮膜を生成する場合は、この皮膜と触れる気体(雰囲気)の酸素濃度を高くすることができる。具体的には、21体積%まで高めても(残部:主として窒素)、即ち、大気雰囲気としても問題なく試作を行えた。

[0050] 試料No.1～6の鋳造材では、ロール間から連続的に出される凝固材の表面に

熱電対(安立計器株式会社製)の接点が常に接触できるように配置し、熱電対の温度と凝固材の移動距離とから表面側の冷却速度を求める。具体的には、以下のようにする。出湯口内面及び凝固材の表面(ここでは、溶湯が鋳型と接触する地点S、及び凝固材が鋳型との接触を終了する地点E)において、出湯口から連続的に出される凝固材の幅方向における中央部分にそれぞれ熱電対(ここでは、0.05mmの溶接品)を配置する。凝固材が鋳型と接触する区間(上記地点Sと地点Eとの間、例えば、ロールの最小ギャップから下流側に所定距離進んだ地点までの区間)を移動する時間に対する凝固材の温度変化を測定し、以下の式(1)で求められる値を表面側の冷却速度とする。

式(1) (出湯口内面の溶湯の温度と凝固材が鋳型との接触を終了する時点での熱電対の測定温度の差)/(凝固材が鋳型と接触する区間を移動する時間(sec))

上記地点Sの温度は、鋳込み開始温度を示し、地点Eの温度は、熱電対が凝固材と同じ速度で移動することで、具体的には半凝固状態にある凝固材に伴って熱電対が移動することによって測定できる(後述する試料No.7～9も同様)。

[0051] なお、鋳造材の横断面組織を観察して、デンドライトの間隔を測定し、以下の式(2)に当てはめることで冷却速度を試算したが、上記熱電対による実測値とほぼ整合性があることを確認した。従って、この組織観察による手法で冷却速度を管理してもよい。

式(2) (冷却速度)=(デンドライト間隔(μm)/35.5)$^{(-3.23)}$

[0052] ここでは、冷却速度は、ロールの温度、ロールの表面被覆材、ロールの材質、ロール径、ロール間の最小ギャップ及び溶湯温度から選ばれる一種の条件、又は数種の条件を組み合わせて変化させることで異ならせている。また、鋳造速度は、鋳造装置に印加する電流値を変化させることで異ならせている。なお、比較的遅い鋳造速度で鋳造すると、ロール間の間隙で溶湯が凝固するなどの問題が生じる恐れがあるため、垂直式双ロール鋳造装置を使うことが好ましい。

[0053] 試料No.7～9の鋳造材は、表面領域を構成する溶湯(以下、表面溶湯と呼ぶ)と、中央領域を構成する混合溶湯とを用いて作製する。表面溶湯は、表1に示す母材組成のものを準備し、混合溶湯は、表1に示す母材組成の溶湯に添加粒子として最大径40μm以下のSiC粒子を混合したものを準備する。そして、図1に示すように両溶湯20,21を貯留する溶解保持炉11と、炉11の中央に配される隔壁12と、炉11の下方に設けられた出湯口13近傍に設けられた冷却機構14とを具える連続鋳造装置10を用いて、試料No.7～9の鋳造材を作製する。炉11の外周には、図示しない加熱手段を具えて溶湯20,21を所定の温度に保持できるようにしている。隔壁12は、出湯口13まで延設されて、両溶湯20,21の混合を防止し、出湯口13を出て凝固した両溶湯が図1に示すように積層状態となるように設けている。隔壁12内に混合溶湯20を供給し、隔壁12の外周面と炉11の内周面で囲まれる空間に表面溶湯21を供給する。冷却機構14は、内部に循環冷媒(例えば水)が充填されており、出湯口13近傍の溶湯を連続的に効率よく冷却することができる構成である。この鋳造装置10は、垂直式鋳造装置としている。

[0054] 試料No.7～9の鋳造材も、試料No.1～6と同様に熱電対を配置して、表面側の冷却速度を求める。具体的には、出湯口内面及び凝固材の表面(ここでは、溶湯が鋳型と接触する地点S、及び凝固材の表面が固相線温度になる地点E)において、出湯口から連続的に出される凝固材の幅方向における中央部分にそれぞれ熱電対(ここでは、0.05mmの溶接品)を配置し、凝固材の表面が母相の固相線温度になるまでの区間長さを測定し、以下の式(3)で求められる値を表面側の冷却速度とする。

式(3) (出湯口内面の溶湯の温度と鋳造材の母相の固相線温度)/(鋳造材表面が母相の固相線温度になるまでの区間長さを移動する時間(sec))

[0055] 得られた試料No.1～8の鋳造材に、表2,3に示す加工度(ここでは総圧下率(%))の塑性加工(ここでは圧延)を施し、1次加工材(ここでは圧延材)を得る。圧延は、鋳造材を300℃に加熱し、ローラを200℃に加熱し、複数パス行う(1パスあたりの圧下率:5～30%)。試料No.9の鋳造材は、上記塑性加工を施さず

、鋳造材の厚さのままである。得られた試料No.1～8の圧延材、及び試料No.9の鋳造材の厚さ(最終厚さ:mm)、表面領域及び中央領域に存在する硬質粒子の組成及び最大径(μm)、中央領域に存在する最大径20μm超の硬質粒子の体積割合(体積%)、室温での引張強さ(MPa)、室温での伸び(%)、剛性、及び成形性を調べた。その結果を表2,3に示す。

[0056] 硬質粒子の存在は、例えば、試料の任意の断面をとり、この断面をX線顕微鏡で観察することで確認できる。断面は、硬質粒子が現れるようにとる。具体的には、厚さ方向に平行な面が現れるように板材を切断する。確認された硬質粒子の組成は、断面を鏡面研磨した後、例えば、EDXなどに代表される定性分析と半定量分析を用いて求められる。表2,3において「Al-Mg系」、「Mg-Zn系」の粒子は、析出物と考えられ、「Si-C系」の粒子は、添加したSiC粒子と考えられる。上記組成からなる各粒子は、母材であるマグネシウム合金よりも弾性率が十分に高く、50GPa以上であると考えられる。

[0057] 硬質粒子の最大径(μm)は、板材の断面を所定の倍率(ここでは400倍)の光学顕微鏡で観察することで確認できる。光学顕微鏡での観察が困難な場合、X線顕微鏡を用いることができる。断面の所定の測定領域(ここでは、厚さ×幅3mmの領域)において、一つの硬質粒子を通過する板材の厚さ方向の線分をその硬質粒子の径とし、最も長い線分をその硬質粒子の最大径とする。測定領域において、板材の表面から厚さの45%までの表面領域と、二つの表面領域に挟まれて板材の中央に位置する厚さの10%の中央領域とのそれぞれについて、存在する全ての硬質粒子の最大径を測定し、最も大きい最大径を調べる。図2に、試料No.5の断面顕微鏡写真を示す。図2に示す写真は、板材の中央領域を含む中心部分を示し(厚さ0.15mmのみ)、黒い粒や白っぽい粒が硬質粒子である。

[0058] 最大径20μm超の硬質粒子の体積割合(含有量)は、試料の任意の断面(積層構造が見える面)をとり、この断面についてX線顕微鏡で1mm^{2}以上の断面積S(mm^2)を観察し、断面積S(mm^2)中に存在する粒子の総面積S_1(mm^2)及び粒子の個数nを算出する。得られた粒子の総面積S_1(mm^2)を個数nで除して、粒子の平均断面

積S_0(mm²)を求め、この平均断面積S_0(mm²)を以下の式に導入して、体積割合を求める。

式 (体積割合)=$(4\times n\times S_0^{1.5})/(3\times S\times \pi)$

[0059] 剛性は、試料No.1(圧延材)を基準(1.00)とし、板状の各試料を薄片状に加工し、曲げ試験法で剛性率を測定し、試料No.1に対する相対値を求めて評価する。この曲げ試験はJIS Z 2248に準じて実施し、一定距離(250mm)だけ離して設けられた2個の円筒状支えにシート状試験片を載せ、先端部が半円柱状(半径10mm)に形成された押し金具を上記試験片の中央部に当て、この押し金具を徐々に押し込んで上記試験片を所定の曲げ角度(5°)にまで曲げることで、上記試験片の曲げ反力を測定した。また、試験片が所定形状よりも小さい場合、曲げ試験は、例えば、円筒状支えと試験片が接する地点の距離(以下、接触距離と呼ぶ)を変えて試料No.1と比較測定を行うことで評価可能であることを確認している。具体的には、接触距離が25mmの場合に上述の条件と同等の測定結果が得られることを確認している。成形性(塑性加工性)は、試料No.1(圧延材)を基準(△)とし、試料No.1～8は、200℃以上300℃未満の温度でR=5、Dia=40、絞り深さ30mmのカップ絞り試験を実施し、n=5のうち、最も健全な成形品について、表面のクラック、しわ、形状精度などの一般的に成形体に対して実施される評価を行い、試料No.1よりもクラックの深さが小さく、しわが少なく、形状精度が良好な場合を○と評価する。試料No.1～8と厚さが異なる試料No.9は、板厚に比例させてコーナーRが大きな金型を用いると共に、圧下速度も変えて200℃以上300℃以下の温度でカップ絞り試験を実施し、n=5のうち、最も健全な成形体について、同じ条件で曲げ試験を行った試料No.1と比較し、表面のクラックの深さが小さく、しわが少なく、形状精度が良好な場合を○と評価する。なお、成形性の試験は、上記曲げ試験に準じたシート状試験片と2個の円筒状支えとを用いた方法を採用することができる。具体的には、試験片全体を150～350℃に加熱した後、この試験片を上記支えで支持して、試験片の中央部に試験片の厚さの4倍の圧下子にて曲げ角90°の加工を行った後、試験片を上記支えから取り外し、試験片において曲げ軸に垂直

な方向の断面について湾曲部分の外側の裂け、キズ、その他の欠点の有無をルーペ、マイクロスコープや光学顕微鏡といった機器で観察する。この観察結果が上記絞り試験の結果と同様の傾向があることを確認している。

[0060] [表2]

試料No.	1	2	3	4	5	6
鋳造後の塑性加工	有り	有り	有り	有り	有り	有り
塑性加工の加工度	99%	95%	95%	95%	95%	95%
最終厚さ	0.6mmt	0.6mmt	0.6mmt	0.6mmt	0.6mmt	0.6mmt
硬質粒子の組成	Al-Mg系	Al-Mg系	Al-Mg系	Al-Mg系 Mg-Zn系	Al-Mg系 Mg-Zn系	Al-Mg系 Mg-Zn系
表面領域最大粒子径	40μm	20μm	20μm	20μm	20μm	4μm
中央領域最大粒子径	40μm	40μm	20μm	40μm	40μm	40μm
20μm超の粒子 体積割合	0.5%	0.5%	-	4%	7%	7%
引張強さ(MPa)	270	270	270	300	340	350
伸び(%)	22	22	24	18	17	18
剛性	1.00 (基準)	1.00	0.95	1.05	1.10	1.10
成形性	△ (基準)	○	○	○	○	○

[0061] [表3]

試料No.	7	8	9
鋳造後の塑性加工	有り	有り	無し
塑性加工の加工度	95%	95%	0
最終厚さ	0.6mmt	0.6mmt	2.0mmt
硬質粒子の組成	Al-Mg系 Si-C系	Al-Mg系 Mg-Zn系 Si-C系	Al-Mg系 Si-C系
表面領域最大粒子径	20μm	20μm	20μm
中央領域最大粒子径	40μm	40μm	40μm
20μm超の粒子 体積割合	7%	13%	4%
引張強さ(MPa)	340	420	340
伸び(%)	12	7	10
剛性	1.20	1.40	1.10
成形性	○	○	○

[0062] 表2,3に示すように、表面領域に存在する硬質粒子の最大径が20μm以下であり、中央領域に存在する硬質粒子の最大径が20μm超50μm未満であると、鋳造材でも圧延材でも成形性に優れると共に、剛性が高いことが分かる。特に、弾性率がより高い硬質粒子が存在することで、剛性が高く、引張強さといった機械的特性に優れることも分かる。また、最大径が20μm超の硬質粒子

が中央領域にのみ存在し、表面領域には20μm以下の微細な硬質粒子が存在している試料は、上記粗大な粒子が割れなどの起点になり難く、成形性に優れると考えられる。

[0063] 更に、試料No. 1, 2, 4, 5について、高温での伸び(200℃、250℃)を調べた。その結果を図3に示す。図3に示すように、表面領域に存在する硬質粒子の最大径が20μm以下であり、中央領域に存在する硬質粒子の最大径が20μm超50μm未満である試料No. 2, 4, 5は、高温での機械的特性にも優れることが分かる。

[0064] 上記圧延材(試料No. 2, 4～8)は、成形性に優れることから、例えば、プレス加工用素材として好適に利用できると期待される。特に、高温での機械的特性に優れる試料は、例えば、プレス成形や深絞り加工において、コーナー部分での破断を低減できると考えられる。また、得られたプレス加工材(成形体)は、防食被膜や塗装膜を具えることで、防食性や商品価値を高めることができる。

[0065] なお、得られた試料No. 1～9の鋳造材に、250℃～600℃かつその固相線温度以下の温度範囲で、30分～50時間の熱処理を実施した。上記温度範囲及び時間範囲において複数の条件で各試料に熱処理を施したが、上記温度範囲及び時間範囲では、変化度合いが小さいものの、鋳造材の内部に存在する粒子(析出物)の大きさが小さくなることを確認した。このことから、鋳造材に存在する粒子の大きさ(径)と、最終製品に存在させる粒子の大きさ(径)とから、所望の熱処理条件を適宜選択することができる。例えば、最終製品に存在する粒子を小さくするには、熱処理をできるだけ多く施すとよい。但し、柱状晶組織は、熱処理により粒状に再結晶して、粗大化が進行する。例えば、アルミニウムを9質量%、亜鉛を1質量%、残部がマグネシウム及び不可避不純物からなるマグネシウム合金では、結晶が300μm以上に粗大化すると塑性加工性が悪化する。また、過度に長時間の熱処理を行うことはエネルギー利用の面からも好ましくない。従って、鋳造材に熱処理を施す場合、好ましい温度範囲は、250～600℃かつ固相線温度以下の温度であり、安全かつ効率よく短

時間で熱処理を行うには300～400℃がより好ましい。また、好ましい時間範囲は、30分～50時間であり、上述のように安全かつ効率を考慮すると3～30時間がより好ましく、10～15時間が特に好ましい。この熱処理の終了時は、急速に冷却すると、鋳造材表面の酸化を防止して表面性状に優れる製品が得られるだけでなく、結晶界面に脆弱な粒子が生成されることを抑制し、塑性加工性を向上することができて好ましい。この冷却速度は10℃/分以上が好ましく、上述のように安全かつ効率を考慮すると、50℃/分以上がより好ましく、500℃/分以上が特に好ましい。

[0066] なお、上述した実施形態は、本発明の要旨を逸脱することなく、適宜変更することが可能であり、上述した構成に限定されるものではない。例えば、マグネシウム合金の組成や添加する硬質粒子の組成などを適宜変更することができる。

産業上の利用可能性

[0067] 本発明マグネシウム合金板材は、プレス加工や鍛造加工といった塑性加工性に優れるため、このような成形加工用素材として好適に利用することができる。本発明マグネシウム合金成形体は、携帯電気機器の筐体や自動車部品などの軽量化が望まれる分野の構造材として好適に利用することができる。

請求の範囲

[1] マグネシウム合金からなる板材であって、

マグネシウム合金からなる母材中に硬質粒子を含有しており、

前記板材の厚さ方向において、板材の各表面から板材の厚さの40%までの領域を表面領域とし、残部の領域を中央領域とするとき、

前記中央領域に存在する硬質粒子は、その最大径が20μmを超えて50μm未満であり、

前記表面領域に存在する硬質粒子は、その最大径が20μm以下であることを特徴とするマグネシウム合金板材。

[2] 前記表面領域に存在する硬質粒子は、その最大径が5μm以下であることを特徴とする請求項1に記載のマグネシウム合金板材。

[3] 前記板材は、総圧下率20%以上の圧延加工が施されていることを特徴とする請求項1又は2に記載のマグネシウム合金板材。

[4] 前記表面領域を構成する母材は、アルミニウムを2.5質量%以上6.5質量%未満含有し、シリコン及びカルシウムが合計で0.5質量%以下であるマグネシウム合金からなることを特徴とする請求項1に記載のマグネシウム合金板材。

[5] 前記表面領域を構成する母材は、アルミニウムを6.5質量%以上20質量%以下含有し、シリコン及びカルシウムが合計で0.5質量%以下であるマグネシウム合金からなることを特徴とする請求項1に記載のマグネシウム合金板材。

[6] 板材の総体積に占める前記中央領域に存在する硬質粒子の体積割合が0.5%以上15%未満であることを特徴とする請求項1に記載のマグネシウム合金板材。

[7] 前記中央領域に存在する硬質粒子は、析出物からなることを特徴とする請求項1に記載のマグネシウム合金板材。

[8] 前記板材の表面に被覆層を具えることを特徴とする請求項1に記載のマグネシウム合金板材。

[9] 請求項1に記載されるマグネシウム合金板材に塑性加工が施されてなることを特徴とするマグネシウム合金成形体。

[10] 更に、その表面に被覆層を具えることを特徴とする請求項9に記載のマグネシウム合金成形体。

[図1]

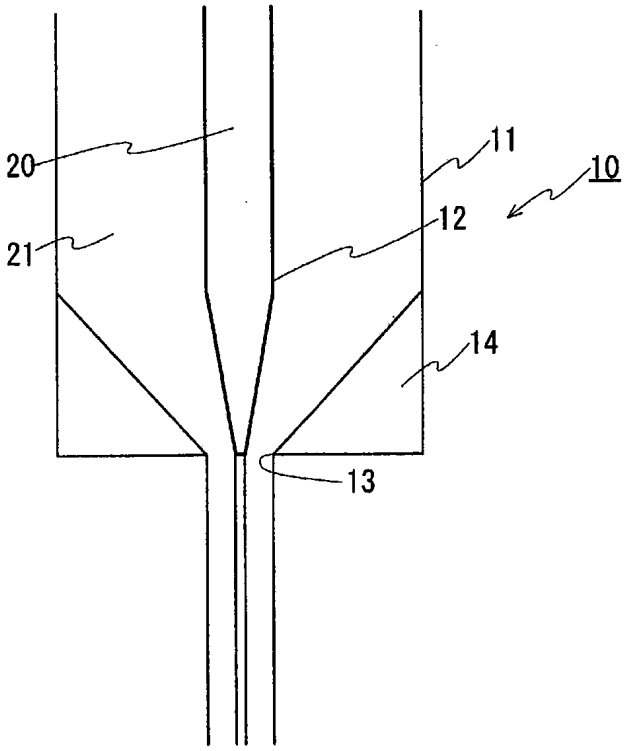

[図2]

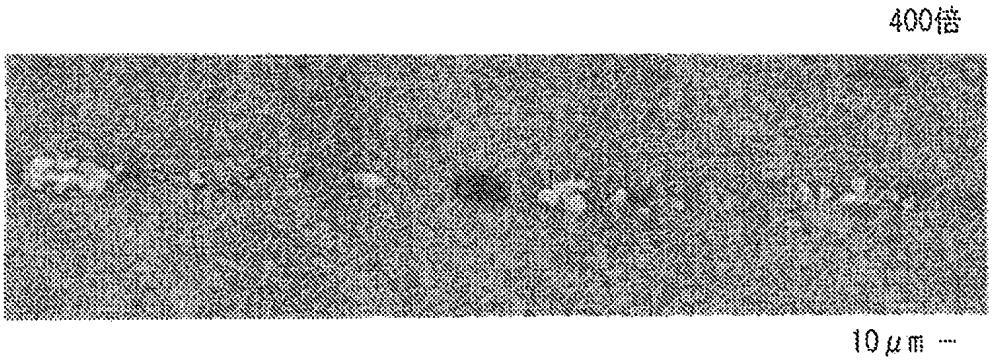

[図3]

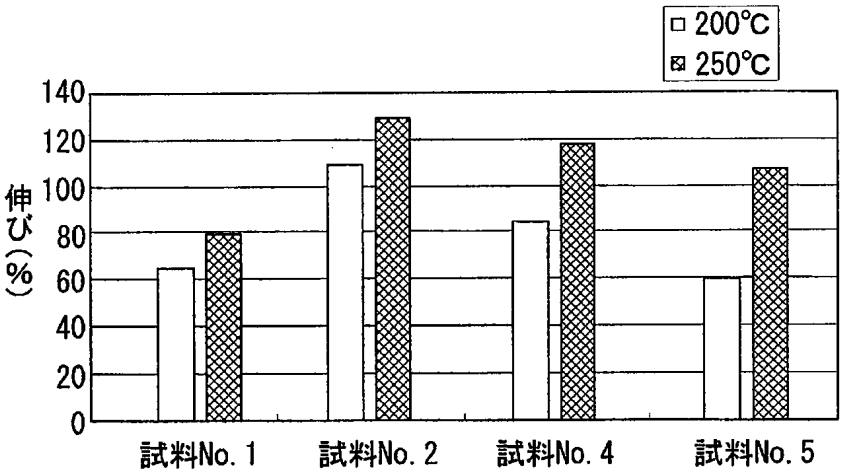

INTERNATIONAL SEARCH REPORT

International application No.
PCT/JP2009/000110

A. CLASSIFICATION OF SUBJECT MATTER
C22C23/02(2006.01)i, *B22D11/06*(2006.01)i, *B22D19/14*(2006.01)i, *B22D21/04*(2006.01)i, *C22F1/06*(2006.01)i, *C22F1/00*(2006.01)n

According to International Patent Classification (IPC) or to both national classification and IPC

B. FIELDS SEARCHED

Minimum documentation searched (classification system followed by classification symbols)
C22C23/00-23/06, B22D11/06, B22D19/14, B22D21/04, C22F1/06, C22F1/00

Documentation searched other than minimum documentation to the extent that such documents are included in the fields searched

Jitsuyo Shinan Koho	1922-1996	Jitsuyo Shinan Toroku Koho	1996-2009
Kokai Jitsuyo Shinan Koho	1971-2009	Toroku Jitsuyo Shinan Koho	1994-2009

Electronic data base consulted during the international search (name of data base and, where practicable, search terms used)

C. DOCUMENTS CONSIDERED TO BE RELEVANT

Category*	Citation of document, with indication, where appropriate, of the relevant passages	Relevant to claim No.
A	JP 2006-144043 A (Mitsubishi Aluminum Co., Ltd.), 08 June, 2006 (08.06.06), Claims 1 to 3; Par. Nos. [0012], [0022] (Family: none)	1-10
A	WO 2002/083341 A1 (Sumitomo Electric Industries, Ltd.), 24 October, 2002 (24.10.02), Claims 1 to 4; page 5, lines 24 to 29 & US 2004/0084173 A1 & US 2005/0158202 A1 & US 2006/0266495 A1	1-10

☐ Further documents are listed in the continuation of Box C. ☐ See patent family annex.

* Special categories of cited documents:
"A" document defining the general state of the art which is not considered to be of particular relevance
"E" earlier application or patent but published on or after the international filing date
"L" document which may throw doubts on priority claim(s) or which is cited to establish the publication date of another citation or other special reason (as specified)
"O" document referring to an oral disclosure, use, exhibition or other means
"P" document published prior to the international filing date but later than the priority date claimed
"T" later document published after the international filing date or priority date and not in conflict with the application but cited to understand the principle or theory underlying the invention
"X" document of particular relevance; the claimed invention cannot be considered novel or cannot be considered to involve an inventive step when the document is taken alone
"Y" document of particular relevance; the claimed invention cannot be considered to involve an inventive step when the document is combined with one or more other such documents, such combination being obvious to a person skilled in the art
"&" document member of the same patent family

Date of the actual completion of the international search 03 April, 2009 (03.04.09)	Date of mailing of the international search report 14 April, 2009 (14.04.09)
Name and mailing address of the ISA/ Japanese Patent Office Facsimile No.	Authorized officer Telephone No.

国際調査報告

国際出願番号　ＰＣＴ／ＪＰ２００９／０００１１０

Ａ．　発明の属する分野の分類（国際特許分類（ＩＰＣ））

Int.Cl.　C22C23/02(2006.01)i, B22D11/06(2006.01)i, B22D19/14(2006.01)i, B22D21/04(2006.01)i, C22F1/06(2006.01)i, C22F1/00(2006.01)n

Ｂ．　調査を行った分野

調査を行った最小限資料（国際特許分類（ＩＰＣ））

Int.Cl.　C22C23/00-23/06, B22D11/06, B22D19/14, B22D21/04, C22F1/06, C22F1/00

最小限資料以外の資料で調査を行った分野に含まれるもの

日本国実用新案公報	１９２２－１９９６年
日本国公開実用新案公報	１９７１－２００９年
日本国実用新案登録公報	１９９６－２００９年
日本国登録実用新案公報	１９９４－２００９年

国際調査で使用した電子データベース（データベースの名称、調査に使用した用語）

Ｃ．　関連すると認められる文献

引用文献のカテゴリー＊	引用文献名　及び一部の箇所が関連するときは、その関連する箇所の表示	関連する請求項の番号
Ａ	ＪＰ　２００６－１４４０４３　Ａ（三菱アルミニウム株式会社）２００６．０６．０８，請求項１－３、【００１２】、【００２２】（ファミリーなし）	１－１０
Ａ	ＷＯ　２００２／０８３３４１　Ａ１（住友電気工業株式会社）２００２．１０．２４，請求の範囲１－４、第５ページ第２４－２９行 ＆ ＵＳ　２００４／００８４１７３　Ａ１　＆　ＵＳ　２００５／０１５８２０２　Ａ１　＆　ＵＳ　２００６／０２６６４９５　Ａ１	１－１０

☐　Ｃ欄の続きにも文献が列挙されている。

☐　パテントファミリーに関する別紙を参照。

＊　引用文献のカテゴリー

「Ａ」特に関連のある文献ではなく、一般的技術水準を示すもの

「Ｅ」国際出願日前の出願または特許であるが、国際出願日以後に公表されたもの

「Ｌ」優先権主張に疑義を提起する文献又は他の文献の発行日若しくは他の特別な理由を確立するために引用する文献（理由を付す）

「Ｏ」口頭による開示、使用、展示等に言及する文献

「Ｐ」国際出願日前で、かつ優先権の主張の基礎となる出願の日の後に公表された文献

「Ｔ」国際出願日又は優先日後に公表された文献であって出願と矛盾するものではなく、発明の原理又は理論の理解のために引用するもの

「Ｘ」特に関連のある文献であって、当該文献のみで発明の新規性又は進歩性がないと考えられるもの

「Ｙ」特に関連のある文献であって、当該文献と他の１以上の文献との、当業者にとって自明である組合せによって進歩性がないと考えられるもの

「＆」同一パテントファミリー文献

国際調査を完了した日 ０３．０４．２００９	国際調査報告の発送日 １４．０４．２００９
国際調査機関の名称及びあて先 日本国特許庁（ＩＳＡ／ＪＰ） 郵便番号１００－８９１５ 東京都千代田区霞が関三丁目４番３号	特許庁審査官（権限のある職員）　４Ｋ　３７７０ 河口　展明 電話番号　０３－３５８１－１１０１　内線　３４３５

UNITED STATES PATENT AND TRADEMARK OFFICE

UNITED STATES DEPARTMENT OF COMMERCE
United States Patent and Trademark Office
Address: COMMISSIONER FOR PATENTS
P.O. Box 1450
Alexandria, Virginia 22313-1450
www.uspto.gov

APPLICATION NO.	FILING DATE	FIRST NAMED INVENTOR	ATTORNEY DOCKET NO.	CONFIRMATION NO.
12/864,419	07/23/2010	Masatada Numano	050395-0481	4366

20277 7590 02/15/2011
MCDERMOTT WILL & EMERY LLP
600 13TH STREET, N.W.
WASHINGTON, DC 20005-3096

EXAMINER
YANG, JIE

ART UNIT	PAPER NUMBER
1733	

MAIL DATE	DELIVERY MODE
02/15/2011	PAPER

Please find below and/or attached an Office communication concerning this application or proceeding.

The time period for reply, if any, is set in the attached communication.

UNITED STATES PATENT AND TRADEMARK OFFICE

Commissioner for Patents
United States Patent and Trademark Office
P.O. Box 1450
Alexandria, VA 22313-1450
www.uspto.gov

BC

February 15, 2011

In re application of	:	DECISION ON REQUEST TO
Masatada Numano et al..	:	PARTICIPATE IN PATENT
Serial No. 12/864,419	:	PROSECUTION HIGHWAY
Filed: July 23, 2010	:	PROGRAM AND
For: MAGNESIUM ALLOY SHEET	:	PETITION TO MAKE SPECIAL
MATERIAL	:	UNDER 37 CFR 1.102(a)

This is a decision on the request for reconsideration to participate in the PCT Patent Prosecution Highway (PCT-PPH) pilot program and the petition under 37 CFR 1.102(a), filed September 22, 2010, to make the above-identified application special.

The request and petition are **GRANTED**.

A grantable request to participate in the PCT-PPH pilot program and petition to make special require:

(1) The U.S. application must disclose an eligible relationship to one or more PCT applications where the ISA or IPEA are the JPO, EPO, or USPTO;

(2) At least one claim in the PCT application has novelty, inventive step, and industrial applicability and must be free of any observations in Box VIII in the latest work product in the international stage or applicant must identify and explain why the claim(s) is/are not subject to the observation in Box VIII;

(3) Applicant must submit a copy of the claim(s) from the PCT application(s) that have novelty, inventive step, and industrial applicability along with an English translation thereof and a statement that the English translation is accurate, if the claims are not in the English language;

(4) All the claims in the U.S. application must sufficiently correspond or be amended to sufficiently correspond to the claim(s) that have novelty, inventive step, and industrial applicability in the PCT application(s);

(5) Examination of the U.S. application has not begun;

(6) Applicant must submit a copy of the latest international work product from the PCT application indicating that the claim(s) have novelty, inventive step, and industrial applicability along with an English translation thereof if the latest international work

product is not in the English language; and

(7) Applicant must submit an IDS listing the documents cited by the PCT examiner in the international work product along with copies of documents except U.S. patents or U.S. patent application publications.

The request to participate in the PPH program and petition comply with the above requirements. Accordingly, the above-identified application has been accorded "special" status.

The application is being forwarded to the examiner for action on the merits commensurate with this decision.

Any inquiry regarding this decision should be directed to Blaine Copenheaver, Quality Assurance Specialist, at (571) 272-1156.

All other inquiries concerning the examination or status of the application is accessible in the PAIR system at http://www.uspto.gov/ebc/index.html.

/Blaine Copenheaver/

Blaine Copenheaver
Quality Assurance Specialist
Technology Center 1700

UNITED STATES PATENT AND TRADEMARK OFFICE

UNITED STATES DEPARTMENT OF COMMERCE
United States Patent and Trademark Office
Address: COMMISSIONER FOR PATENTS
P.O. Box 1450
Alexandria, Virginia 22313-1450
www.uspto.gov

APPLICATION NO.	FILING DATE	FIRST NAMED INVENTOR	ATTORNEY DOCKET NO.	CONFIRMATION NO.
12/864,429	07/23/2010	Hideaki Mizuno	14006/195	4410

23838 7590 10/27/2011
KENYON & KENYON LLP
1500 K STREET N.W.
SUITE 700
WASHINGTON, DC 20005

EXAMINER
DAVIS, PATRICIA A

ART UNIT	PAPER NUMBER
1729	

MAIL DATE	DELIVERY MODE
10/27/2011	PAPER

Please find below and/or attached an Office communication concerning this application or proceeding.

The time period for reply, if any, is set in the attached communication.

UNITED STATES PATENT AND TRADEMARK OFFICE

Commissioner for Patents
United States Patent and Trademark Office
P.O. Box 1450
Alexandria, VA 22313-1450
www.uspto.gov

OCT 27 2011

CST

In re application of Hideaki Mizuno Serial No. 12/864,429 Filed: July 23, 2010 For: FUEL CELL SYSTEM	: : : : : : :	DECISION ON REQUEST TO PARTICIPATE IN PATENT PROSECUTION HIGHWAY PROGRAM AND PETITION TO MAKE SPECIAL UNDER 37 CFR 1.102(a)

This is a decision on the request to participate in the Patent Prosecution Highway (PPH) program filed August 15, 2011.

The request and petition are **DISMISSED**.

A grantable request to participate in the PPH program and petition to make special require:

(1) The U.S. application must validly claim priority under 35 U.S.C. 119(a) to one or more applications filed in the JPO, note where the JPO application with similar claims is not the same application from which the U.S. application claims priority that the applicant must identify the relationship between the JPO application with similar claims and the JPO priority application;

(2) Applicant must submit a copy of:
   a. The allowable/patentable claim(s) from the JPO application(s) or if a copy of the allowable/patentable claims is available via the Dossier Access System (DAS) applicant may request the USPTO to obtain a copy from DAS; however, if the USPTO is unable to obtain a copy from the DAS, the applicant will be required to submit a copy;
   b. An English translation of the allowable/ patentable claim(s), if applicable; and
   c. A statement that the English translation is accurate, if applicable;

(3) Applicant must:
   a. Ensure all the claims in the U.S. application must sufficiently correspond or be amended to sufficiently correspond to the allowable/patentable claim(s) in the JPO application(s); and
   b. Submit a claims correspondence table in English;

(4) Examination of the U.S. application has not begun;

(5) Applicant must submit:

a. Documentation of prior office action:
   i. a copy of the office action(s) just prior to the "Decision to Grant a Patent" from each of the JPO application(s) containing the allowable/patentable claims(s) or
   ii. if the allowable/patentable claim(s) are from "Notification of Reasons for Refusal" then the Notification of Reasons for Refusal or
   iii. if the JPO application is a first action allowance then no office action from the JPO is necessary should be indicated on the request/petition form:

   Further, if a copy of the documents from (i) or (ii) is available via the Dossier Access System (DAS), applicant may request the USPO obtain a copy from the DAS; however, if the USPTO is unable to obtain a copy of the DAS, the applicant will be required to submit a copy;
b. An English language translation of the JPO Office action from (5)(a)(i)-(ii) above if applicable; and
c. A statement that the English translation is accurate;

(6) Applicant must submit:

a. An IDS listing the documents cited by the JPO examiner in the JPO office action (unless already submitted in this application)
b. Copies of documents except U.S. patents or U.S. patent application publications (unless already submitted in this application).

The request to participate in the PPH program and petition fail because:

(3) All of the claims in the U.S. application must sufficiently correspond or be amended to sufficiently correspond to the allowable/patentable claim(s) in the JPO application(s).

Claim 1 of the present application does not sufficiently correspond to claim 1 of the corresponding Japanese application. Specifically, independent claim 1 of Japanese application 2008-016423 requires the phrase "wherein the operation control means estimates the output voltage of the fuel cell . . . .exceeds the output voltage upper limit value", whereas this phrase is not present in present claim 1. Similarly, compare claim 3 of the present application with claim 3 of the Japanese application. Specifically, independent claim 3 of the Japanese application requires the phrase wherein the operation control means estimates the output voltage of the fuel cell . . . .exceeds the output voltage upper limit value", whereas this phrase is not present in present claim 3.

Applicant is given a time period of **ONE MONTH OR THIRTY DAYS**, whichever is longer, from the mailing date of this decision to correct the deficiencies. **NO EXTENSION OF TIME UNDER 37 CFR 1.136 IS PERMITTED.** If the deficiencies are

not corrected within the time period given, the application with await action in its regular turn.

Any inquiry regarding this decision should be directed to Christine Tierney, Quality Assurance Specialist, at (571) 272-1055.

All other inquiries concerning the examination or status of the application is accessible in the PAIR system at http://www.uspto.gov/ebc/index.html.

/Christine Tierney/

Christine Tierney
Quality Assurance Specialist
Technology Center 1700

UNITED STATES PATENT AND TRADEMARK OFFICE

UNITED STATES DEPARTMENT OF COMMERCE
United States Patent and Trademark Office
Address: COMMISSIONER FOR PATENTS
P.O. Box 1450
Alexandria, Virginia 22313-1450
www.uspto.gov

APPLICATION NO.	FILING DATE	FIRST NAMED INVENTOR	ATTORNEY DOCKET NO.	CONFIRMATION NO.
12/864,429	07/23/2010	Hideaki Mizuno	14006/195	4410

23838 7590 11/15/2011
KENYON & KENYON LLP
1500 K STREET N.W.
SUITE 700
WASHINGTON, DC 20005

EXAMINER
DAVIS, PATRICIA A

ART UNIT	PAPER NUMBER
1729	

MAIL DATE	DELIVERY MODE
11/15/2011	PAPER

Please find below and/or attached an Office communication concerning this application or proceeding.

The time period for reply, if any, is set in the attached communication.

UNITED STATES PATENT AND TRADEMARK OFFICE

Commissioner for Patents
United States Patent and Trademark Office
P.O. Box 1450
Alexandria, VA 22313-1450
www.uspto.gov

CST

November 15, 2011

In re application of	:	DECISION ON REQUEST TO
Hideaki Mizuno	:	PARTICIPATE IN PATENT
Serial No. 12/864,429	:	PROSECUTION HIGHWAY
Filed: July 23, 2010	:	PROGRAM AND
For: FUEL CELL SYSTEM	:	PETITION TO MAKE SPECIAL
	:	UNDER 37 CFR 1.102(a)

This is a decision on the supplemental request to participate in the Patent Prosecution Highway (PPH) program filed November 3, 2011.

The request and petition are **GRANTED**.

A grantable request to participate in the PPH program and petition to make special require:

(1) The U.S. application must validly claim priority under 35 U.S.C. 119(a) to one or more applications filed in the JPO, note where the JPO application with similar claims is not the same application from which the U.S. application claims priority that the applicant must identify the relationship between the JPO application with similar claims and the JPO priority application;

(2) Applicant must submit a copy of:
   a. The allowable/patentable claim(s) from the JPO application(s) or if a copy of the allowable/patentable claims is available via the Dossier Access System (DAS) applicant may request the USPTO to obtain a copy from DAS; however, if the USPTO is unable to obtain a copy from the DAS, the applicant will be required to submit a copy;
   b. An English translation of the allowable/ patentable claim(s), if applicable; and
   c. A statement that the English translation is accurate, if applicable;

(3) Applicant must:
   a. Ensure all the claims in the U.S. application must sufficiently correspond or be amended to sufficiently correspond to the allowable/patentable claim(s) in the JPO application(s); and
   b. Submit a claims correspondence table in English;

(4) Examination of the U.S. application has not begun;

(5) Applicant must submit:
   a. Documentation of prior office action:
      i. a copy of the office action(s) just prior to the "Decision to Grant a Patent" from each of the JPO application(s) containing the allowable/patentable claims(s) or
      ii. if the allowable/patentable claim(s) are from "Notification of Reasons for Refusal" then the Notification of Reasons for Refusal or
      iii. if the JPO application is a first action allowance then no office action from the JPO is necessary should be indicated on the request/petition form:
      Further, if a copy of the documents from a or b is available via the Dossier Access System (DAS), applicant may request the USPO obtain a copy from the DAS; however, if the USPTO is unable to obtain a copy of the DAS, the applicant will be required to submit a copy;
   b. An English language translation of the JPO Office action from (5)(a)(i)-(ii) above if applicable; and
   c. A statement that the English translation is accurate; and

(6) Applicant must submit:
   a. An IDS listing the documents cited by the JPO examiner in the JPO office action (unless already submitted in this application)
   b. Copies of documents except U.S. patents or U.S. patent application publications (unless already submitted in this application).

The request to participate in the PPH program and petition comply with the above requirements. Accordingly, the above-identified application has been accorded "special" status.

The application is being forwarded to the examiner for action on the merits commensurate with this decision.

Any inquiry regarding this decision should be directed to Christine Tierney, Quality Assurance Specialist, at (571) 272-1055.

All other inquiries concerning the examination or status of the application is accessible in the PAIR system at http://www.uspto.gov/ebc/index.html.

/Christine Tierney/

Christine Tierney
Quality Assurance Specialist
Technology Center 1700

27 SEP 2010

UNITED STATES PATENT AND TRADEMARK OFFICE

Commissioner for Patents
United States Patent and Trademark Office
P.O. Box 1450
Alexandria, VA 22313-1450
www.uspto.gov

CLARK & ELBING LLP
101 FEDERAL STREET
BOSTON MA 02110

In re Application of	:	
TULLIN, Søren, et al.	:	
Application No.: 12/864,450	:	
PCT No.: PCT/DK2008/000249	:	DECISION
Int. Filing Date: 04 July 2008	:	
Priority Date: 03 August 2007	:	ON PETITION UNDER
Docket No.: 50733/007001	:	
For: USE OF A COMPOSITION	:	37 CFR 1.137(b)
COMPRISING AT LEAST ONE	:	
BETA-BLOCKER FOR THE	:	
TREATMENT OF SLEEP DISORDERS	:	

Applicant's Petition For Revival Under 37 CFR 1.137(b), filed in the above-captioned application on 23 July 2010 is **GRANTED**.

Applicant states that the entire delay in filing the required reply from the due date for the required reply until the filing of a grantable petition under 37 CFR 1.137(b) was unintentional, as required by 37 CFR 1.137(b)(3). The basic national fee and petition fee have been paid. A terminal disclaimer is not required as the application was filed on or after 08 June 1995. Accordingly, all requirements under 37 CFR 1.137(b) have been satisfied.

This application is being forwarded to the National Stage Processing Branch of the Office of Patent Application Processing for further action consistent with this decision.

/Erin P. Thomson/

Erin P. Thomson
Attorney Advisor
PCT Legal Administration

Telephone: 571-272-3292

United States Patent and Trademark Office

Commissioner for Patents
United States Patent and Trademark Office
P.O. Box 1450
Alexandria, VA 22313-1450
www.uspto.gov

MAILED

DEC 13 2010

PCT LEGAL ADMINISTRATION

Seed Intellectual Property Law Group PLLC
701 Fifth Avenue, Suite 5400
Seattle WA 98104

In re Application of
Zheng et al.
Application No.: 12/864,486
PCT No.: PCT/CN2008/000182
Int. Filing Date: 24 January 2008
Priority Date: N/A
Attorney Docket No.: 732156.488USPC
For: Key Switch And Electronic Device

DECISION ON PETITION

This is in response to the petition under 37 CFR 1.47(a) filed on 12 October 2010.

BACKGROUND

This international application was filed on 24 January 2008, claimed no earlier priority date, and designated the U.S. The International Bureau transmitted a copy of the published international application to the USPTO on 06 August 2009. The 30 month time period for paying the basic national fee in the United States expired at midnight on 26 July 2010 (since 24 July 2010 was a Saturday). Applicants filed *inter alia* the basic national fee on 23 July 2010.

On 13 August 2010, a Notification of Missing Requirements (Form PCT/DO/EO/905) was mailed to applicants, requiring the submission of an oath or declaration compliant with 37 CFR 1.497(a) and (b) and the surcharge under 37 CFR 1.492(h).

DISCUSSION

A petition under 37 CFR 1.47(a) must be accompanied by (1) the fee under 37 CFR 1.17(h), (2) factual proof that the missing joint inventor refuses to execute the application or cannot be reached after diligent effort, (3) a statement of the last known address of the missing inventor, and (4) an oath or declaration by each 37 CFR 1.47(a) applicant on his or her own behalf and on behalf of the non-signing joint inventor.

Regarding **requirement (1)**, applicants have paid $130.00 toward the $200.00 petition fee. The $70.00 balance will be charged to counsel's Deposit Account.

Regarding **requirement (2)**, applicants have provided a "Declaration of Shoko I. Leek," who describes his efforts to obtain Mr. Zheng's execution of the application. Atty. Leek indicates that, on 21 September 2010, he transmitted an email tio Mr. Zheng, with a declaration and a copy of the application attached thereto. Atty. Leek has provided a copy of said email, as well as an email response from Mr. Zheng. As such, it would be reasonable to conclude that Mr. Zheng was presented with a copy of the application papers and a declaration. Atty. Leek further indicates that, during a telephone conference on 28 September 2010, "Mr. Yong Zheng told me that he would not sign the declaration." Based on the totality of the evidence now of record in the application file, it would be appropriate to conclude that requirement (2) has been satisfied.

Regarding **requirement (3)**, the petition provides a statement of the last known address of the non-signing joint inventor. However, petitioner's attention is respectfully drawn to MPEP 409.03(e), which states (in part) that "That address should be the last known address at which the inventor customarily receives mail. See MPEP § 605.03. Ordinarily, the last known address will be the last known residence of the nonsigning inventor." The address provided appears to be the address of an employer, and is not clearly an address at which the inventor customarily receives mail. Petitioner should clarify whether this is the last known address where Mr. Zheng receives mail and, if not, should furnish such address.

Regarding **requirement (4)**, the declaration filed on 12 October 2010 is satisfactory.

DECISION

The petition under 37 CFR 1.47(a) is **DISMISSED**, without prejudice.

If reconsideration on the merits of this petition is desired, a proper response must be filed within **TWO (2) MONTHS** from the mail date of this decision. Any reconsideration request should include a cover letter entitled "Renewed Petition Under 37 CFR 1.47(a)." No additional petition fee is required. Extensions of time may be obtained under 37 CFR 1.136(a). Failure to timely file a proper response will result in **ABANDONMENT**.

Any further correspondence with respect to this matter may be filed electronically via EFS-Web selecting the document description "Petition for review and processing by the PCT Legal Office" or by mail addressed to Mail Stop PCT, Commissioner for Patents, Office of PCT Legal Administration, P.O. Box 1450, Alexandria, Virginia 22313-1450, with the contents of the letter marked to the attention of the Office of PCT Legal Administration.

/George Dombroske/
George Dombroske
PCT Legal Examiner
Office of PCT Legal Administration
Tel: (571) 272-3283

United States Patent and Trademark Office

MAILED

FEB 25 2011

PCT LEGAL ADMINISTRATION

Commissioner for Patents
United States Patent and Trademark Office
P.O. Box 1450
Alexandria, VA 22313-1450
www.uspto.gov

Seed Intellectual Property Law Group PLLC
701 Fifth Avenue, Suite 5400
Seattle WA 98104

In re Application of
Zheng et al.
Application No.: 12/864,486
PCT No.: PCT/CN2008/000182
Int. Filing Date: 24 January 2008
Priority Date: N/A
Attorney Docket No.: 732156.488USPC
For: Key Switch And Electronic Device

DECISION ON PETITION

This is in response to the renewed petition under 37 CFR 1.47(a) filed on 23 December 2010.

DISCUSSION

In a Decision mailed on 13 December 2010, the petition under 37 CFR 1.47(a) filed on 12 October 2010 was dismissed, without prejudice, because

> Regarding **requirement (3)**, the petition provides a statement of the last known address of the non-signing joint inventor. However, petitioner's attention is respectfully drawn to MPEP 409.03(e), which states (in part) that "That address should be the last known address at which the inventor customarily receives mail. See MPEP § 605.03. Ordinarily, the last known address will be the last known residence of the nonsigning inventor." The address provided appears to be the address of an employer, and is not clearly an address at which the inventor customarily receives mail. Petitioner should clarify whether this is the last known address where Mr. Zheng receives mail and, if not, should furnish such address.

In response, petitioner confirms that the given address is "the address of an employer, and not the residence of the inventor," but states that this is the "last known" address of the inventor and that, in response to email correspondence, the inventor "did not provide his current address." Petitioner provides an email address for the inventor but, for purposes of service of notice of the decision, a last known address where the inventor receives (or last received) mail is required, Petitioner should therefore state the last (likely, residential) address where the inventor in question received physically mailed correspondence.

DECISION

The petition under 37 CFR 1.47(a) is **DISMISSED**, without prejudice.

If reconsideration on the merits of this petition is desired, a proper response must be filed within **TWO (2) MONTHS** from the mail date of this decision. Any reconsideration request should include a cover letter entitled "Renewed Petition Under 37 CFR 1.47(a)." No additional petition fee is required. Extensions of time may be obtained under 37 CFR 1.136(a). Failure to timely file a proper response will result in **ABANDONMENT**.

Any further correspondence with respect to this matter may be filed electronically via EFS-Web selecting the document description "Petition for review and processing by the PCT Legal Office" or by mail addressed to Mail Stop PCT, Commissioner for Patents, Office of PCT Legal Administration, P.O. Box 1450, Alexandria, Virginia 22313-1450, with the contents of the letter marked to the attention of the Office of PCT Legal Administration.

/George Dombroske/
George Dombroske
PCT Legal Examiner
Office of PCT Legal Administration
Tel: (571) 272-3283

United States Patent and Trademark Office

Commissioner for Patents
United States Patent and Trademark Office
P.O. Box 1450
Alexandria, VA 22313-1450
www.uspto.gov

MAILED

MAY 24 2011

PCT LEGAL ADMINISTRATION

Seed Intellectual Property Law Group PLLC
701 Fifth Avenue, Suite 5400
Seattle WA 98104

In re Application of
Zheng et al.
Application No.: 12/864,486
PCT No.: PCT/CN2008/000182
Int. Filing Date: 24 January 2008
Priority Date: N/A
Attorney Docket No.: 732156.488USPC
For: Key Switch And Electronic Device

DECISION ON PETITION

This is in response to the renewed petition under 37 CFR 1.47(a) filed on 22 March 2011.

DISCUSSION

In a Decision mailed on 25 February 2011, the renewed petition under 37 CFR 1.47(a) filed on 23 December 2010 was dismissed, without prejudice, because

> petitioner confirms that the given address is "the address of an employer, and not the residence of the inventor," but states that this is the "last known" address of the inventor and that, in response to email correspondence, the inventor "did not provide his current address." Petitioner provides an email address for the inventor but, for purposes of service of notice of the decision, a last known address where the inventor receives (or last received) mail is required, Petitioner should therefore state the last (likely, residential) address where the inventor in question received physically mailed correspondence.

In response, petitioner asserts that the given last known address is "although of an employer of the nonsigning inventor, nonetheless the last known address at which the inventor received mail. Applicants further respectfully submit that applicants' and applicants' attorney's repeated email requests to the nonsigning inventor to obtain his current residential address have not been answered." Petitioner requests acceptance of the address "in order to prevent irreparable damage and preserve the rights of the joint inventors and the Assignee of the application."

Petitioner's attention is drawn to MPEP 605.03, which states (in part) that

> In situations where an inventor does not execute the oath or declaration and the inventor is not deceased, such as in an application filed under 37 CFR 1.47, the inventor's most recent home address must be given to enable the Office to communicate directly with the inventor as necessary.

In view of this policy, it would not be appropriate to accept the last known address as provided by petitioner. Petitioner should ascertain and provide the inventor's last known residential (home) address. In the event that the inventor declines requests for his current home address, his last known home address, even if a previous address, should be provided.

DECISION

The petition under 37 CFR 1.47(a) is **DISMISSED**, without prejudice.

If reconsideration on the merits of this petition is desired, a proper response must be filed within **TWO (2) MONTHS** from the mail date of this decision. Any reconsideration request should include a cover letter entitled "Renewed Petition Under 37 CFR 1.47(a)." No additional petition fee is required. Extensions of time may be obtained under 37 CFR 1.136(a). Failure to timely file a proper response will result in **ABANDONMENT**.

Any further correspondence with respect to this matter may be filed electronically via EFS-Web selecting the document description "Petition for review and processing by the PCT Legal Office" or by mail addressed to Mail Stop PCT, Commissioner for Patents, Office of PCT Legal Administration, P.O. Box 1450, Alexandria, Virginia 22313-1450, with the contents of the letter marked to the attention of the Office of PCT Legal Administration.

/George Dombroske/
George Dombroske
PCT Legal Examiner
Office of PCT Legal Administration
Tel: (571) 272-3283

United States Patent and Trademark Office

Commissioner for Patents
United States Patent and Trademark Office
P.O. Box 1450
Alexandria, VA 22313-1450
www.uspto.gov

Seed Intellectual Property Law Group PLLC
701 Fifth Avenue, Suite 5400
Seattle WA 98104

MAILED

AUG 08 2011

PCT LEGAL ADMINISTRATION

In re Application of	:	
Zheng et al.	:	
Application No.: 12/864,486	:	DECISION
PCT No.: PCT/CN2008/000182	:	
Int. Filing Date: 24 January 2008	:	ON
Priority Date: N/A	:	
Attorney Docket No.: 732156.488USPC	:	PETITION
For: Key Switch And Electronic Device	:	

This is in response to the renewed petition under 37 CFR 1.47(a) filed on 06 June 2011.

DISCUSSION

In a Decision mailed on 24 May 2011, the renewed petition under 37 CFR 1.47(a) filed on 22 March 2011 was dismissed, without prejudice, because petitioner had not provided the non-signing inventor's last known residential address.

In response, petitioner has provided such an address. Accordingly, all of the requirements for relief under 37 CFR 1.47(a) now have been satisfied.

DECISION

The petition under 37 CFR 1.47(a) is **GRANTED**.

As provided in 37 CFR 1.47(a), a notice of the filing of this application will be forwarded to the non-signing inventor at his last known address of record.

A notice of the filing of the application under 37 CFR 1.47(a) will be published in the Official Gazette.

This application is being returned to the Office of Patent Application Processing. Its date under 35 U.S.C. 371(c)(1), (2) and (4) is **12 October 2010**.

/George Dombroske/
George Dombroske
PCT Legal Examiner
Office of PCT Legal Administration
Tel: (571) 272-3283

United States Patent and Trademark Office

Commissioner for Patents
United States Patent and Trademark Office
P.O. Box 1450
Alexandria, VA 22313-1450
www.uspto.gov

Yong Zheng
Hu De Mu Lin Da-Jie (Boulevard)
Baotou, Inner Mongolia
CHINA 014034

MAILED

AUG 08 2011

PCT LEGAL ADMINISTRATION

In re Application of
Zheng et al.
Application No.: 12/864,486
PCT No.: PCT/CN2008/000182
Int. Filing Date: 24 January 2008
Priority Date: N/A
Attorney Docket No.: 732156.488USPC
For: Key Switch And Electronic Device

Dear Mr. Zheng:

You are named as a joint inventor in the above identified United States patent application, filed under the provisions of 35 U.S.C. 116 (United States Code), and 37 CFR 1.47(a), Rules of Practice in Patent Cases. Should a patent be granted on the application you will be designated therein as a joint inventor.

As a named inventor you are entitled to inspect any paper in the file wrapper of the application, order copies of all or any part thereof (at a prepaid cost per 37 CFR 1.19) or make your position of record in the application. Alternatively, you may arrange to do any of the preceding through a registered patent attorney or agent presenting written authorization from you. If you care to join the application, counsel of record (see below) would presumably assist you. Joining in the application would entail the filing of an appropriate oath or declaration by you pursuant to 37 CFR 1.63.

Telephone inquiries regarding this communication should be directed to the undersigned at (571) 272-3283. Requests for information regarding your application should be directed to the File Information Unit at (703) 308-2733. Requests for information regarding how to pay for and order a copy of the application, or a specific paper in the application, should be directed to Certification Division at (703) 308-9726 or 1(800) 972-6382 (outside the Washington D.C. area).

Any further correspondence with respect to this matter should be addressed to the Assistant Commissioner for Patents, Mail Stop PCT, P.O. Box 1450, Alexandria, VA 22313-1450, with the contents of the letter marked to the attention of the Office of PCT Legal Administration.

/George Dombroske/
George Dombroske
PCT Legal Examiner
Office of PCT Legal Administration
Tel: (571) 272-3283

Seed Intellectual Property Law Group PLLC
701 Fifth Avenue, Suite 5400
Seattle WA 98104

UNITED STATES PATENT AND TRADEMARK OFFICE

08 SEP 2010

Commissioner for Patents
United States Patent and Trademark Office
P.O. Box 1450
Alexandria, VA 22313-1450
www.uspto.gov

Law Office of Michael D. Eisenberg
Intellectual Property Law
3258 Caminito Eastbluff
Suite 89
San Diego CA 92037

In re Application of	:	
ABOLKHEIR	:	DECISION ON PETITION
Application No.: 12/864,503	:	
PCT No.: PCT/GB08/04287	:	UNDER
Int'l Filing Date: 24 December 2008	:	
Priority Date: 24 December 2007	:	37 CFR 1.137(b)
Attorney Docket No.: ABOLKHEIR-P006	:	
For: A FOOTSTOOL	:	

The petition to revive under 37 CFR 1.137(b) filed 24 July 2010 in the above-captioned application is hereby **GRANTED** .

Applicant's statement that "the entire delay in filing the required reply from the due date for the required reply until the filing of a grantable petition under 37 CFR 1.137(b) was unintentional" meets the requirements of 37 CFR 1.137(b)(3).

A review of the application file reveals that the petition fee of $810 has been paid and the basic national fee of $165 was provided. Thus, the requirements of 37 CFR 1.137(b) have been satisfied. Therefore, the request to revive the application abandoned under 35 U.S.C. 371(d) is granted as to the National stage in the United States of America.

This application is being forwarded to the United States Designated/Elected Office for further processing.

/Cynthia M. Kratz/
Cynthia M. Kratz
Attorney Advisor
Office of PCT Legal Administration
Telephone: (571)272-3286

UNITED STATES PATENT AND TRADEMARK OFFICE

UNITED STATES DEPARTMENT OF COMMERCE
United States Patent and Trademark Office
Address: COMMISSIONER FOR PATENTS
P.O. Box 1450
Alexandria, Virginia 22313-1450
www.uspto.gov

APPLICATION NO.	FILING DATE	FIRST NAMED INVENTOR	ATTORNEY DOCKET NO.	CONFIRMATION NO.
12/864,524	07/26/2010	Kengo Yoshida	0216-0530PUS1	5510

2292 7590 11/23/2010
BIRCH STEWART KOLASCH & BIRCH
PO BOX 747
FALLS CHURCH, VA 22040-0747

EXAMINER

ART UNIT	PAPER NUMBER
2856	

NOTIFICATION DATE	DELIVERY MODE
11/23/2010	ELECTRONIC

Please find below and/or attached an Office communication concerning this application or proceeding.

The time period for reply, if any, is set in the attached communication.

Notice of the Office communication was sent electronically on above-indicated "Notification Date" to the following e-mail address(es):

mailroom@bskb.com

UNITED STATES PATENT AND TRADEMARK OFFICE

Commissioner for Patents
United States Patent and Trademark Office
P.O. Box 1450
Alexandria, VA 22313-1450
www.uspto.gov

BIRCH STEWART KOLASCH & BIRCH
PO BOX 747
FALLS CHURCH VA 22040-0747

In re Application of	**: DECISION ON REQUEST TO**
Kengo YOSHIDA	**: PARTICIPATE IN THE PATENT**
Application No.: 12/864,524	**: PROSECUTION HIGHWAY**
Filed: 26 July 2010	**: PROGRAM AND PETITION**
Attorney Docket No.: 0216-0530PUS1	**: TO MAKE SPECIAL UNDER**
For: METHOD FOR TESTING FOR THE PRESENCE OF A LEAK HOLE IN A FLUID CONTAINER	**: 37 CFR 1.102(a)**

This is a decision on the request to participate in the Patent Prosecution Highway (PPH) program and the petition under 37 CFR 1.102(a), filed 27 July 2010, to make the above-identified application special.

The request and petition are **GRANTED**.

Discussion

A grantable request to participate in the PPH pilot program and petition to make special require:

1. The U.S. application is

    a. a Paris Convention application which either
        i. validly claims priority under 35 U.S.C. 119(a) and 37 CFR 1.55 to one or more applications filed in the JPO, or
        ii. validly claims priority to a PCT application that contains no priority claims, or
    b. a national stage application under the PCT (an application which entered the national stage in the U.S. from a PCT international application after compliance with 35 U.S.C. 371), which PCT application
        i. validly claims priority to an application filed in the JPO, or
        ii. validly claims priority to a PCT application that contains no priority claims, or
        iii. contains no priority claim, or
    c. a so-called bypass application filed under 35 U.S.C. 111(a) which validly claims benefit under 35 U.S.C. 120 to a PCT application, which PCT application
        i. validly claims priority to an application filed in the JPO, or
        ii. validly claims priority to a PCT application that contains no priority claims, or
        iii. contains no priority claim;

2. Applicant must submit a copy of:
    a. The allowable/patentable claim(s) from the JPO application(s);
    b. An English translation of the allowable/patentable claim(s) and
    c. A statement that the English translation is accurate;
3. Applicant must:
    a. Ensure all the claims in the U.S. application must sufficiently correspond or be amended to sufficiently correspond to the allowable/patentable claim(s) in the JPO application(s) and
    b. Submit a claims correspondence table in English;
4. Examination of the U.S. application has <u>not</u> begun;
5. Applicant must submit:
    a. Documentation of prior office action:
        i. a copy of the office action(s) just prior to the "Decision to Grant a Patent" from each of the JPO application(s) containing the allowable/patentable claim(s) or
        ii. if the allowable/patentable claims(s) are from a "Notification of Reasons for Refusal" then the Notification of Reasons for Refusal or
        iii. if the JPO application is a first action allowance then no office action from the JPO is necessary should be indicated on the request/petition form;
    b. An English language translation of the JPO Office action from (5)(a)(i)-(ii) above
    c. A statement that the English translation is accurate;
6. Applicant must submit:
    a. An IDS listing the documents cited by the JPO examiner in the JPO office action (unless already submitted in this application)
    b. Copies of the documents except U.S. patents or U.S. patent application publications (unless already submitted in this application);

The request to participate in the PPH pilot program and petition comply with the above requirements. Accordingly, the above-identified application has been accorded "special" status.

Inquiries concerning this decision should be directed to Lee W. Young at 571-272-4549.

All other inquiries concerning the examination or status of the application is accessible in the PAIR system at http://www.uspto.gov/ebc.index.html.

This application will be forwarded to the examiner for action on the merits commensurate with this decision.

Lee W. Young
TQAS
Technology Center 2800

UNITED STATES PATENT AND TRADEMARK OFFICE

Commissioner for Patents
United States Patent and Trademark Office
P.O. Box 1450
Alexandria, VA 22313-1450
www.uspto.gov

YOUNG & THOMPSON
209 MADISON STREET
SUITE 500
ALEXANDRIA, VA 22314

MAILED

APR 11 2011

OFFICE OF PETITIONS

In re Application of	:	
Ahmed Haddadi	:	DECISION ON PETITION
Application No. 12/864,569	:	TO WITHDRAW
Filed: July 26, 2010	:	FROM RECORD
Attorney Docket No. 0604-1072	:	

This is a decision on the Request to Withdraw as attorney or agent of record under 37 C.F.R. § 1.36(b), filed February 11, 2011.

The request is **NOT APPROVED**.

The Office strongly encourages practitioner(s) requesting withdrawal from representation as practitioner of record in an application to review the record to determine whether he or she is, in fact, of record and how he or she was made of record. For example, the practitioner(s) should determine whether he or she was appointed by naming each practitioner individually or through the use of a Customer Number.

In the instant application, the practitioner(s) were appointed via Customer Number however the request does not designate a Customer Number to be withdrawn by. The request was signed by Liam McDowell on behalf of all the practitioners (with registration numbers) of record listed on the attached papers.

Further, the Office will require the practitioner(s) to certify that he, she or they have: (1) given reasonable notice to the client, prior to the expiration of the reply period, which the practitioner(s) intends to withdraw from employment; (2) delivered to the client or a duly authorized representative of the client all papers and property (including funds) to which the client is entitled; and (3) notified the client of any replies that may be due and the time frame within which the client must respond, pursuant to 37 CFR 10.40(c).

The current request does not properly withdraw practitioners via Customer Number as it does not set forth all of the above certifications. Therefore, the request cannot be approved at this time. Any subsequent request must withdraw all associated practitioner(s) in the same manner as appointed and provide all of the above listed certifications pursuant to 37 CFR 10.40(c).

There are no outstanding Office actions that require a reply from the applicant.

All future communications from the Office will be directed to above-listed address until otherwise properly notified by the applicant or a proper change of correspondence address have been submitted.

A. Kelley

Alicia Kelley
Petitions Examiner
Office of Petitions

UNITED STATES PATENT AND TRADEMARK OFFICE

Commissioner for Patents
United States Patent and Trademark Office
P.O. Box 1450
Alexandria, VA 22313-1450
www.uspto.gov

JORDAN AND HAMBURG LLP
122 EAST 42ND STREET
SUITE 4000
NEW YORK NY 10168

MAILED
MAR 03 2011
PCT LEGAL ADMINISTRATION

In re Application of	:	
ITOU (Deceased)	:	DECISION ON
Application No.: 12/864,603	:	
PCT No.: PCT/JP09/50960	:	REQUEST
Int. Filing Date: 24 January 2009	:	
Priority Date: 24 January 2008	:	UNDER 37 CFR 1.42
Attorney Docket no.: F10353	:	
For: PROCESS FOR PRODUCING CORRUGATED:		
PLATE AND CORRUGATED PLATE	:	

This is a decision on applicant's request under 37 CFR 1.42 along with an executed declaration filed in the United States Patent and Trademark Office (USPTO) on 29 October 2010.

BACKGROUND

On 26 July 2010, applicant filed a request for entry into the national stage in the United States of America under 35 U.S.C. § 371 with, *inter alia*, the requisite basic national fee.

On 30 August 2010, a Notification of Missing Requirements was mailed to applicant indicating that an oath or declaration, in compliance with 37 CFR 1.497(a) and (b), along with the surcharge for filing the oath or declaration after the thirty month period, was required.

On 29 October 2010, applicant filed a response to the Notification along with a declaration executed by the legal representative of the deceased inventor and by the joint inventor.

DISCUSSION

To meet the requirements for compliance with 37 CFR 1.497(a) and (b), the declaration must state the relationship and the country of citizenship for all inventors, including the deceased inventor and his legal representative. In addition, the declaration must provide the residency and mailing address for all inventors, including the deceased inventor and the legal representative.

The declaration submitted on 29 October 2010 identifies Hirobumi Itou as the legal representative of the deceased inventor Mitsuko Itou and states the relationship, country of

citizenship, residency and mailing address for the legal representative. The declaration meets the requirements for compliance with 37 CFR 1.497(a) and (b). Accordingly, it is appropriate, at this time, to accord the application status under 37 CFR 1.42.

CONCLUSION

For the above reasons, the request for status under 37 CFR 1.42 is **GRANTED.**

The declaration by the legal representative for deceased inventor submitted on 29 October 2010 is accepted as a proper declaration under 37 CFR 1.497(a) and (b).

The application will be forwarded to the United States Designated/Elected Office for further processing. The 35 U.S.C. 371(c)(1), (c)(2) and (c)(4) date is 29 October 2010.

/Cynthia M. Kratz/
Cynthia M. Kratz
Attorney Advisor
PCT Legal Office
Office of PCT Legal Administration

Telephone: (571) 272-3286
Facsimile: (571) 273-0459

United States Patent and Trademark Office

Commissioner for Patents
United States Patent and Trademark Office
P.O. Box 1450
Alexandria, VA 22313-1450
www.uspto.gov

MAILED

NOV 01 2010

PCT LEGAL ADMINISTRATION

GENOMICS INSTITUTE OF THE
NOVARTIS RESEARCH FOUNDATION
10675 JOHN JAY HOPKINS DRIVE, SUITE E225
SAN DIEGO CA 92121-1127

In re Application of	:	
Luehrsen	:	
Application No.: 12/864,636	:	DECISION
PCT No.: PCT/US2009/031345	:	
Int. Filing Date: 16 January 2009	:	ON
Priority Date: 17 January 2008	:	
Attorney Docket No.: PAT052905-US-PCT	:	PETITION
For: Improved Anti-TRKB Antibodies	:	

The petition to revive under 37 CFR 1.137(b) filed on 26 July 2010 in the above-captioned application is hereby **GRANTED** as follows:

Petitioner states that "the entire delay in filing the required reply from the due date for the required reply until the filing of a grantable petition under 37 C.F.R. 1.137(b) was unintentional." Said statement is being accepted in satisfaction of 37 CFR 1.137(b)(3).

A review of the application file reveals that applicant has paid the petition fee. The required reply has been filed. No terminal disclaimer is required. Therefore, the request to revive the application abandoned under 35 U.S.C. 371(d) is granted as to the national stage in the United States of America.

Inspection of the declaration filed on 26 July 2010 reveals that it appears to have been altered after it was signed. Specifically, the declaration was signed on "10/2/2009," but the declaration identifies application no. 12/864,636, which was not assigned until the filing of the instant submission on 26 July 2010.

This application is being returned to the Office of Patent Application Processing for further processing, including the preparation and mailing of a Notification of Missing Requirements (Form PCT/DO/EO/905) requiring the submission of an oath or declaration in compliance with 37 CFR 1.497(a) and (b) and the surcharge under 37 CFR 1.492(h).

/George Dombroske/
George Dombroske
PCT Legal Examiner
Office of PCT Legal Administration
Tel: (571) 272-3283

UNITED STATES PATENT AND TRADEMARK OFFICE

COMMISSIONER FOR PATENTS
UNITED STATES PATENT AND TRADEMARK OFFICE
P.O. BOX 1450
ALEXANDRIA, VA 22313-1450
www.uspto.gov

CANTOR COLBURN LLP - CARRIER
20 CHURCH STREET, 22ND FLOOR
HARTFORD, CT 06103

MAILED
OCT 20 2010
PCT LEGAL ADMINISTRATION

In re Application of LEMCOFF et al	:	
U.S. Application No.: 12/864,638	:	
PCT Application No.: PCT/US2008/001420	:	
Int. Filing Date: 01 February 2008	:	DECISION
Priority Date Claimed: none	:	
Attorney Docket No.: PA-0002096-US	:	
For: CONTROL SYSTEM FOR UV-PCO AIR PURIFIER	:	

This is in response to applicant's correspondence filed 26 July 2010, which is being treated as a request for status under 37 CFR 1.42.

BACKGROUND

On 01 February 2008, applicant filed international application PCT/US2008/001420. The thirty-month period for paying the basic national fee in the United States expired on 02 August 2010.

On 26 July 2010, applicant filed national stage papers in the United States Designated/Elected Office (DO/EO/US). The submission was accompanied by, *inter alia*, the basic national fee required by 35 U.S.C. 371(c)(1) and the present request for status under 37 CFR 1.42.

DISCUSSION

The declaration states that joint inventor Susan Brandes is deceased.

37 CFR 1.42 provides, "In case of the death of the inventor, the legal representative (executor, administrator, etc.) of the deceased inventor may make the necessary oath or declaration, and apply for and obtain the patent."

Effective 07 November 2000, 37 CFR 1.497(b)(2) specifies that, where a person making the declaration is the legal representative of a deceased inventor, the declaration shall state the

following: (1) the relationship of the person to the inventor, (2) the facts the inventor would have been required to state, upon information and belief, (3) that the person is the legal representative of the deceased inventor, and (4) the citizenship, residence, and mailing address of the legal representative.

Applicant is advised that the submission of a declaration executed by the heir(s) of the deceased inventor is hereby construed as an indication that no legal representative of the deceased's estate has been appointed and that no legal representative is required by the applicable law to be appointed. If this interpretation is incorrect applicant is required to promptly notify the Office of such and to submit a declaration properly executed by the legal representative of the deceased inventor in response to this decision.

The declaration filed 26 July 2010 is improper. Specifically, the declaration fails to state one of the citizenship of the deceased inventor as required by 37 CFR 1.497(a)(3) and the citizenship of the legal representative as required by 37 CFR 1.497(b)(2). Applicant is advised that a single indication of citizenship in a signature block cannot be used for both purposes. Furthermore, the international application lists Leland Brandes as an inventor, but Leland Brandes is not indicated as an inventor in the declaration. Applicant may wish to file a petition under 37 CFR 1.497(d) if Leland Brandes is not an inventor.

CONCLUSION

For the reasons above, the request for status under 37 CFR 1.42 is DISMISSED without prejudice.

If reconsideration on the merits of the request is desired, a proper response must be filed within TWO (2) MONTHS from the mail date of this decision. Failure to timely file a proper response will result in ABANDONMENT of the application. Extensions of time are available under 37 CFR 1.136(a). Any reconsideration request should include a cover letter entitled "Renewed Request for Status under 37 CFR 1.42".

Any further correspondence with respect to this matter may be filed electronically via EFS-Web selecting the document description "Petition for review and processing by the PCT Legal Office" or by mail addressed to Mail Stop PCT, Commissioner for Patents, Office of PCT Legal Administration, P.O. Box 1450, Alexandria, Virginia 22313-1450, with the contents of the letter marked to the attention of the Office of PCT Legal Administration.

Bryan Lin
Bryan Lin
PCT Legal Examiner
PCT Legal Office

Telephone: 571-272-3303
Facsimile: 571-273-0459

UNITED STATES PATENT AND TRADEMARK OFFICE

COMMISSIONER FOR PATENTS
UNITED STATES PATENT AND TRADEMARK OFFICE
P.O. BOX 1450
ALEXANDRIA, VA 22313-1450
www.uspto.gov

CANTOR COLBURN LLP - CARRIER
20 CHURCH STREET, 22ND FLOOR
HARTFORD, CT 06103

MAILED
JAN 26 2011
PCT LEGAL ADMINISTRATION

In re Application of LEMCOFF et al	:	
U.S. Application No.: 12/864,638	:	
PCT Application No.: PCT/US2008/001420	:	
Int. Filing Date: 01 February 2008	:	DECISION
Priority Date Claimed: none	:	
Attorney Docket No.: PA-0002096-US	:	
For: CONTROL SYSTEM FOR UV-PCO AIR PURIFIER	:	

This is in response to applicant's renewed request for status under 37 CFR 1.42 filed on 16 December 2010.

BACKGROUND

On 01 February 2008, applicant filed international application PCT/US2008/001420. The thirty-month period for paying the basic national fee in the United States expired on 02 August 2010.

On 26 July 2010, applicant filed national stage papers in the United States Designated/Elected Office (DO/EO/US). The submission was accompanied by, *inter alia*, the basic national fee required by 35 U.S.C. 371(c)(1) and a request for status under 37 CFR 1.42.

On 20 October 2010, this Office mailed a decision dismissing the 26 July 2010 request.

On 16 December 2010, applicant filed the instant renewed request for status under 37 CFR 1.42.

DISCUSSION

The declaration states that joint inventor Susan Brandes is deceased.

37 CFR 1.42 provides, "In case of the death of the inventor, the legal representative (executor, administrator, etc.) of the deceased inventor may make the necessary oath or declaration, and apply for and obtain the patent."

Effective 07 November 2000, 37 CFR 1.497(b)(2) specifies that, where a person making the declaration is the legal representative of a deceased inventor, the declaration shall state the following: (1) the relationship of the person to the inventor, (2) the facts the inventor would have been required to state, upon information and belief, (3) that the person is the legal representative of the deceased inventor, and (4) the citizenship, residence, and mailing address of the legal representative.

The declaration filed 16 December 2010 is improper. In particular, a declaration cannot be amended, altered, or changed in any manner after it has been executed. MPEP 602.01. Furthermore, as set forth in the decision mailed 20 October 2010, the international application lists Leland Brandes as an inventor, but Leland Brandes is not indicated as an inventor in the declaration. Applicant may wish to file a petition under 37 CFR 1.497(d) if Leland Brandes is not an inventor.

CONCLUSION

For the reasons above, the renewed request for status under 37 CFR 1.42 is DISMISSED without prejudice.

If reconsideration on the merits of the request is desired, a proper response must be filed within TWO (2) MONTHS from the mail date of this decision. Failure to timely file a proper response will result in ABANDONMENT of the application. Extensions of time are available under 37 CFR 1.136(a). Any reconsideration request should include a cover letter entitled "Renewed Request for Status under 37 CFR 1.42".

Any further correspondence with respect to this matter may be filed electronically via EFS-Web selecting the document description "Petition for review and processing by the PCT Legal Office" or by mail addressed to Mail Stop PCT, Commissioner for Patents, Office of PCT Legal Administration, P.O. Box 1450, Alexandria, Virginia 22313-1450, with the contents of the letter marked to the attention of the Office of PCT Legal Administration.

BryanLin

Bryan Lin
PCT Legal Examiner
PCT Legal Office

Telephone: 571-272-3303
Facsimile: 571-273-0459

UNITED STATES PATENT AND TRADEMARK OFFICE

COMMISSIONER FOR PATENTS
UNITED STATES PATENT AND TRADEMARK OFFICE
P.O. BOX 1450
ALEXANDRIA, VA 22313-1450
www.uspto.gov

CANTOR COLBURN LLP - CARRIER
20 CHURCH STREET, 22ND FLOOR
HARTFORD, CT 06103

MAILED
JUN 23 2011
PCT LEGAL ADMINISTRATION

In re Application of LEMCOFF et al	:	
U.S. Application No.: 12/864,638	:	
PCT Application No.: PCT/US2008/001420	:	
Int. Filing Date: 01 February 2008	:	DECISION
Priority Date Claimed: none	:	
Attorney Docket No.: PA-0002096-US	:	
For: CONTROL SYSTEM FOR UV-PCO AIR PURIFIER	:	

This is in response to applicant's renewed request for status under 37 CFR 1.42 and petition under 37 CFR 1.497(d) filed on 26 April 2011.

BACKGROUND

On 01 February 2008, applicant filed international application PCT/US2008/001420. The thirty-month period for paying the basic national fee in the United States expired on 02 August 2010.

On 26 July 2010, applicant filed national stage papers in the United States Designated/Elected Office (DO/EO/US). The submission was accompanied by, *inter alia*, the basic national fee required by 35 U.S.C. 371(c)(1) and a request for status under 37 CFR 1.42.

On 20 October 2010, this Office mailed a decision dismissing the 26 July 2010 request.

On 16 December 2010, applicant filed a renewed request for status under 37 CFR 1.42.

On 26 January 2011, this Office mailed a decision dismissing the 16 December 2010 request.

On 26 April 2011, applicant filed the instant renewed request for status under 37 CFR 1.42 and petition under 37 CFR 1.497(d).

DISCUSSION

I. Request for Status under 37 CFR 1.42

The declaration states that joint inventor Susan Brandes is deceased.

37 CFR 1.42 provides, "In case of the death of the inventor, the legal representative (executor, administrator, etc.) of the deceased inventor may make the necessary oath or declaration, and apply for and obtain the patent."

Effective 07 November 2000, 37 CFR 1.497(b)(2) specifies that, where a person making the declaration is the legal representative of a deceased inventor, the declaration shall state the following: (1) the relationship of the person to the inventor, (2) the facts the inventor would have been required to state, upon information and belief, (3) that the person is the legal representative of the deceased inventor, and (4) the citizenship, residence, and mailing address of the legal representative.

The declaration filed 26 April 2011 cannot be accepted until a grantable petition under 37 CFR 1.497(d) is filed.

II. Petition under 37 CFR 1.497(d)

The petition states that Leland Brandes should be removed as an inventor.

37 CFR 1.497(d) states,

> If the oath or declaration filed pursuant to 35 U.S.C. 371(c)(4) and this section names an inventive entity different from the inventive entity set forth in the international application, or if a change to the inventive entity has been effected under PCT Rule 92bis subsequent to the execution of any oath or declaration which was filed in the application under PCT Rule 4.17(iv) or this section and the inventive entity thus changed is different from the inventive entity identified in any such oath or declaration, applicant must submit:
>
> (1) A statement from each person being added as an inventor and from each person being deleted as an inventor that any error in inventorship in the international application occurred without deceptive intention on his or her part;
>
> (2) The processing fee set forth in § 1.17(i); and
>
> (3) If an assignment has been executed by any of the original named inventors, the written consent of the assignee (see § 3.73(b) of this chapter); and
>
> (4) Any new oath or declaration required by paragraph (f) of this section.

With regard to item (1) above, the requisite statement has been provided.

With regard to item (2) above, the requisite processing fee has been provided.

With regard to item (3) above, MPEP 201.03, Section II. D., states in relevant part, "Where no assignee exists requester should affirmatively state that fact. If the file record

including the request is silent as to the existence of an assignee it will be presumed that no assignee exists. Such presumption should be set forth in the decision to alert requesters to the requirement." In the present case, although the petition fails to affirmatively state that the application has not been assigned by any of the original named inventors, because a corporate applicant is listed on the international application, it will not be presumed that no assignee exists. Thus, applicant must either provide written consent of any existing assignee or affirmatively state that no assignment has been executed by any of the originally named inventors.

With regard to item (4) above, a new declaration under 37 CFR 1.497(f) is not required.

CONCLUSION

For the reasons in §I above, the renewed request for status under 37 CFR 1.42 is DISMISSED without prejudice.

For the reasons in §II above, the petition under 37 CFR 1.497(d) is DISMISSED without prejudice.

If reconsideration on the merits of the request and petition is desired, a proper response must be filed within TWO (2) MONTHS from the mail date of this decision. Failure to timely file a proper response will result in ABANDONMENT of the application. Extensions of time are available under 37 CFR 1.136(a).

Any further correspondence with respect to this matter may be filed electronically via EFS-Web selecting the document description "Petition for review and processing by the PCT Legal Office" or by mail addressed to Mail Stop PCT, Commissioner for Patents, Office of PCT Legal Administration, P.O. Box 1450, Alexandria, Virginia 22313-1450, with the contents of the letter marked to the attention of the Office of PCT Legal Administration.

Bryan Lin
PCT Legal Examiner
PCT Legal Office

Telephone: 571-272-3303
Facsimile: 571-273-0459

UNITED STATES PATENT AND TRADEMARK OFFICE

Commissioner for Patents
United States Patent and Trademark Office
P.O. Box 1450
Alexandria, VA 22313-1450
www.uspto.gov

MAILED
OCT 14 2011
PCT LEGAL ADMINISTRATION

CANTOR COLBURN LLP - CARRIER
20 CHURCH STREET, 22ND FLOOR
HARTFORD, CT 06103

In re Application of LEMCOFF et al	:	
U.S. Application No.: 12/864,638	:	
PCT Application No.: PCT/US2008/001420	:	
Int. Filing Date: 01 February 2008	:	DECISION
Priority Date Claimed: none	:	
Attorney Docket No.: PA-0002096-US	:	
For: CONTROL SYSTEM FOR UV-PCO AIR PURIFIER	:	

This is in response to applicant's renewed request for status under 37 CFR 1.42 and petition under 37 CFR 1.497(d) filed on 17 August 2011.

BACKGROUND

On 01 February 2008, applicant filed international application PCT/US2008/001420. The thirty-month period for paying the basic national fee in the United States expired on 02 August 2010.

On 26 July 2010, applicant filed national stage papers in the United States Designated/Elected Office (DO/EO/US). The submission was accompanied by, *inter alia*, the basic national fee required by 35 U.S.C. 371(c)(1) and a request for status under 37 CFR 1.42.

On 20 October 2010, this Office mailed a decision dismissing the 26 July 2010 request.

On 16 December 2010, applicant filed a renewed request for status under 37 CFR 1.42.

On 26 January 2011, this Office mailed a decision dismissing the 16 December 2010 request.

On 26 April 2011, applicant filed a renewed request for status under 37 CFR 1.42 and petition under 37 CFR 1.497(d).

On 23 June 2011, this Office mailed a decision dismissing the 26 April 2011 request and petition.

On 17 August 2011, applicant filed the instant renewed request for status under 37 CFR 1.42 and renewed petition under 37 CFR 1.497(d).

DISCUSSION

I. Request for Status under 37 CFR 1.42

The declaration states that joint inventor Susan Brandes is deceased.

37 CFR 1.42 provides, "In case of the death of the inventor, the legal representative (executor, administrator, etc.) of the deceased inventor may make the necessary oath or declaration, and apply for and obtain the patent."

Effective 07 November 2000, 37 CFR 1.497(b)(2) specifies that, where a person making the declaration is the legal representative of a deceased inventor, the declaration shall state the following: (1) the relationship of the person to the inventor, (2) the facts the inventor would have been required to state, upon information and belief, (3) that the person is the legal representative of the deceased inventor, and (4) the citizenship, residence, and mailing address of the legal representative.

The declaration filed 26 April 2011 is in compliance with 37 CFR 1.42 and 1.497.

II. Petition under 37 CFR 1.497(d)

The petition states that Leland Brandes should be removed as an inventor.

37 CFR 1.497(d) states,

> If the oath or declaration filed pursuant to 35 U.S.C. 371(c)(4) and this section names an inventive entity different from the inventive entity set forth in the international application, or if a change to the inventive entity has been effected under PCT Rule 92bis subsequent to the execution of any oath or declaration which was filed in the application under PCT Rule 4.17(iv) or this section and the inventive entity thus changed is different from the inventive entity identified in any such oath or declaration, applicant must submit:
>
> (1) A statement from each person being added as an inventor and from each person being deleted as an inventor that any error in inventorship in the international application occurred without deceptive intention on his or her part;
>
> (2) The processing fee set forth in § 1.17(i); and
>
> (3) If an assignment has been executed by any of the original named inventors, the written consent of the assignee (see § 3.73(b) of this chapter); and
>
> (4) Any new oath or declaration required by paragraph (f) of this section.

With regard to item (1) above, the requisite statement has been provided.

With regard to item (2) above, the requisite processing fee has been provided.

With regard to item (3) above, written consent of the assignee has been provided.

With regard to item (4) above, a new declaration under 37 CFR 1.497(f) is not required.

CONCLUSION

For the reasons in §I above, the renewed request for status under 37 CFR 1.42 is GRANTED.

For the reasons in §II above, the renewed petition under 37 CFR 1.497(d) is GRANTED.

The application has an International Filing Date under 35 U.S.C. 363 of 01 February 2008, and a date under 35 U.S.C. 371(c)(1), (c)(2), and (c)(4) of 26 April 2011.

This application is being forwarded to the United States Designated/Elected Office (DO/EO/US) for further processing in accordance with this decision.

Bryan Lin

Bryan Lin
PCT Legal Examiner
PCT Legal Office

Telephone: 571-272-3303
Facsimile: 571-273-0459

26 AUG 2010

UNITED STATES PATENT AND TRADEMARK OFFICE

Commissioner for Patents
United States Patent and Trademark Office
P.O. Box 1450
Alexandria, VA 22313-1450
www.uspto.gov

SMITH FROHWEIN TEMPEL GREENLEE BLAHA, LLC
Two Ravinia Drive
Suite 700
ATLANTA GA 30346

In re Application of	:	
FREUND	:	
Application No.: 12/864,697	:	
PCT No.: PCT/US2007/089038	:	DECISION ON PETITION
Int. Filing Date: 28 December 2007	:	
Priority Date: None	:	UNDER 37 CFR 1.137(b)
Atty. Docket No.: 12020.0040U1	:	
For: PRE-HEATING OF RECORDING MEDIA IN AN OPTICAL WRITING DEVICE	:	

The petition to revive under 37 CFR 1.137(b) filed 27 July 2010 in the above-captioned application is hereby **GRANTED** as follows:

Applicant's statement that "the entire delay in filing the required reply from the due date for the required reply until the filing of a grantable petition under 37 CFR 1.137(b) was unintentional" satisfies the requirement of 37 CFR 1.137(b)(3).

A review of the application file reveals that applicant has now provided payment of the full, U.S. Basic National Fee. Therefore, the request to revive the application abandoned under 35 U.S.C. 371(d) is granted as to the National stage in the United States of America.

This application is being forwarded to the United States Designated/Elected Office (US/DO/EO) for continued processing.

Derek A. Putonen
Attorney Advisor
Office of PCT Legal Administration
Tel: (571) 272-3294

UNITED STATES PATENT AND TRADEMARK OFFICE

Commissioner for Patents
United States Patent and Trademark Office
P.O. Box 1450
Alexandria, VA 22313-1450
www.uspto.gov

20808
BROWN & MICHAELS, PC
400 M & T Bank Building
118 North Tioga St.
Ithaca, NY 14850

MAILED

OCT 29 2010

PCT LEGAL ADMINISTRATION

In re Application of
MARTIN MACHOTA, Félix
U.S. Application No.: 12/864,725
PCT No.: PCT/ES2009/070040
Int. Filing Date: 24 February 2009
Priority Date: 26 February 2008
Attorney Docket No.: IPK-37
For: PAPER DISPENSER

DECISION

This decision is in response to the declaration filed with the national stage papers on 27 July 2010 which is treated as a petition under 37 CFR 1.42.

BACKGROUND

On 27 July 2010, applicant submitted papers to enter the national stage of PCT/ES2009/070040 which was accompanied by, *inter alia*, a declaration executed by the legal representative of a deceased sole inventor.

DISCUSSION

37 CFR 1.42 *When the Inventor is Dead*, states, in part:

> In case of the death of the inventor, the legal representative (executor, administrator, etc.) of the deceased inventor may make the necessary oath or declaration, and apply for and obtain the patent.

Applicant submitted a declaration executed by Félix Martin Jimenez as legal representative of deceased inventor, Félix MARTIN MACHOTA. The declaration lists the citizenship, residence and address of the legal representative required by 37 CFR 1.497(b)(2), as well as the required information for the deceased inventor.

The declaration is in compliance with 37 CFR 1.497(a)-(b).

CONCLUSION

The papers filed under 37 CFR 1.42 are **ACCEPTED**.

This application is being forwarded to the United States Designated/Elected Office for further processing.

James Thomson

James Thomson
Attorney Advisor
Office of PCT Legal Administration

Tel.: (571) 272-3302

UNITED STATES PATENT AND TRADEMARK OFFICE

Commissioner for Patents
United States Patent and Trademark Office
P.O. Box 1450
Alexandria, VA 22313-1450
www.uspto.gov

WENDEROTH, LIND & PONACK, L.L.P.
1030 15th Street, N.W.,
Suite 400 East
Washington DC 20005-1503

MAILED
NOV 03 2010
PCT LEGAL ADMINISTRATION

In re Application of :
HAMAGUCHI :
Application No.: 12/864,727 :
PCT No.: PCT/JP2009/050002 : DECISION ON PAPERS
Int. Filing Date: 05 January 2009 :
Priority Date: 01 February 2008 : UNDER 37 CFR 1.42
Attorney Docket No.: 2010_0984A :
For: INNER JOINT MEMBER FOR :
CONSTANT VELOCITY UNIVERSAL :
JOINT, MANUFACTURING METHOD :
THEREFOR, AND CONSTANT :
VELOCITY UNIVERSAL JOINT :

This decision is in response to applicant's declaration filed 27 July 2010. The filed combined declaration and power of attorney is being treated as a request for status under 37 CFR 1.42. No petition fee is due.

BACKGROUND

On 05 January 2010, applicant filed international application PCT/JP2009/050002, which claimed priority to an earlier application filed 01 February 2008. A copy of the international application was communicated to the United States Patent and Trademark Office from the International Bureau on 06 August 2009. Pursuant to 37 CFR 1.495, the thirty-month period for paying the basic national fee in the United States expired at midnight on 01 August 2010.

On 27 July 2010, applicant filed a transmittal letter for entry into the national stage in the United States which was accompanied by the requisite basic national fee as required by 35 U.S.C. 371(c)(1); an English translation of the international application, an executed combined declaration and power of attorney, an Information Disclosure Statement and a first preliminary amendment.

DISCUSSION

37 CFR 1.42 When the Inventor is Dead, states, in part:

"In case of the death of the inventor, the legal representative (executor, administrator, etc.) of the deceased inventor may make the necessary oath or declaration, and apply for and

obtain the patent."

The declaration submitted on 27 July 2010 is executed by Yasunori Hamaguchi and Yumiko Yokoyama as legal representatives to the estate of deceased inventor, Hiromitsu Hamaguchi. The declaration provides the citizenship, residence and mailing address for both the deceased inventor and the signing legal representatives per 37 CFR 1.497(a)(3). As such, it is proper to grant applicant's request for status pursuant to 37 CFR 1.42.

CONCLUSION

Applicant's request for status under 37 CFR 1.42 is **GRANTED**.

This application has an international application filing date of 05 January 2009 and will be given a date of **27 July 2010** under 35 U.S.C. 371(c)(1), (c)(2) and (c)(4).

This application is being returned to the DO/EO/US for processing in accordance with this decision.

Derek A. Putonen
Attorney Advisor
Office of PCT Legal Administration
Tel: (571) 272-3294

30 SEP 20[illegible]

UNITED STATES PATENT AND TRADEMARK OFFICE

Commissioner for Patents
United States Patent and Trademark Office
P.O. Box 1450
Alexandria, VA 22313-1450
www.uspto.gov

Wenderoth, Lind & Ponack, L.L.P.
1030 15th Street, N.W.,
Suite 400 East
Washington DC 20005-1503

In re Application of HAMAGUCHI (deceased) Application No.: 12/864,732 PCT No.: PCT/JP2009/050001 Int. Filing Date: 05 January 2009 Priority Date: 30 January 2008 Attorney Docket No.: 2010_0733A For: CAGE FOR CONSTANT VELOCITY UNIVERSAL JOINT	:	DECISION REGARDING SUBMISSION UNDER 37 CFR 1.42

This decision is issued in response to the declaration filed 27 July 2010 which is being treated as a Submission under 37 CFR 1.42. No petition fee is required.

BACKGROUND

On 05 January 2009, applicant filed international application PCT/JP2009/050001 which claimed a priority date of 30 January 2008. On 06 August 2009, a copy of the international application was communicated to the United States Patent And Trademark Office ("USPTO") by the International Bureau. The deadline for payment of the basic national fee was 30 July 2010 (thirty months from the priority date).

On 27 July 2010, applicant filed a request for entry into the national stage in the United States accompanied by, among other materials, payment of the basic national fee; a translation of the international application; and a declaration executed by Yasunori Hamaguchi and Yumiko Yokoyama, on behalf of deceased inventor, Hiromitsu Hamaguchi.

DISCUSSION

37 CFR 1.42 *When the Inventor is Dead*, states, in part:

> In case of the death of the inventor, the legal representative (executor, administrator, etc.) of the deceased inventor may make the necessary oath or declaration, and apply for and obtain the patent.

37 CFR 1.497(b)(2) states the following:

> (2) If the person making the oath or declaration or any supplemental oath or declaration is not the inventor (§§ 1.42, 1.43, or § 1.47) the oath or declaration shall state the relationship of the person to the inventor, and, upon information and belief, the facts which the inventor would have been required to state. If the person signing is the legal representative of a deceased inventor, the oath or declaration shall also state that the person is a legal representative and the citizenship, residence, and mailing address of the legal representative.

The declaration filed 27 July 2010 was executed by Yasunori Hamaguchi and Yumiko Yokoyama as "heir and legal representative" to the deceased inventor, Hiromitsu Hamaguchi. The declaration provides the residence, post office address, and country of citizenship for the deceased inventor and the legal representatives. Therefore, the declaration is acceptable under 37 CFR 1.42 and complies with 37 CFR 1.497(a)-(b).

CONCLUSION

The papers filed under 37 CFR 1.42 are **ACCEPTED**.

This application is being forwarded to the National Stage Processing Branch of the International Division for continued national stage processing.

Anthony Smith
Attorney-Advisor
Office of PCT Legal Administration
Tel: (571) 272-3298
Fax: (571) 273-0459

UNITED STATES PATENT AND TRADEMARK OFFICE

Commissioner for Patents
United States Patent and Trademark Office
P.O. Box 1450
Alexandria, VA 22313-1450
www.uspto.gov

MAILED

FEB 14 2011

PCT LEGAL ADMINISTRATION

THE WEBB LAW FIRM, P.C.
700 KOPPERS BUILDING
436 SEVENTH AVENUE
PITTSBURGH PA 15219

In re Application of	:	DECISION ON
MEULENKAMP	:	
Application No.: 12/864,759	:	PETITION UNDER
PCT No.: PCT/NL2009/050040	:	
Int. Filing Date: 28 January 2009	:	37 CFR § 1.47(b)
Priority Date: 29 January 2008	:	
Attorney Docket No.: 6012-102113	:	
For: CONVEYOR BELT	:	

This is a decision on applicant's petition under 37 CFR 1.47(b) filed in the United States Patent and Trademark Office (USPTO) on 10 January 2011. The petition is **DISMISSED** without prejudice.

BACKGROUND

On 28 January 2009, applicant filed international application PCT/NL2009/050040, which designated the US and claimed a priority date of 29 January 2008. A copy of the international application was communicated to the United States Patent and Trademark Office (USPTO) from the International Bureau on 06 August 2009. The thirty-month period for paying the basic national fee in the United States expired at midnight on 29 July 2010.

On 27 July 2010, applicant filed a submission for entry into the national stage in the United States which was accompanied by, *inter alia*, the U.S. Basic National Fee.

On 08 September 2010, the United States Designated/Elected Office (DO/EO/US) mailed a NOTIFICATION OF MISSING REQUIREMENTS UNDER 35 U.S.C. 371 (Form PCT/DO/EO/905) indicating, *inter alia*, that an oath or declaration of the inventors in compliance with 37 CFR 1.497(a)-(b) was required.

On 10 January 2011, applicant submitted the instant petition under 37 CFR 1.47(b). The petition was accompanied by, *inter alia*, a petition/fee for a two-month extension of time, a declaration of the inventor, a statement of facts by a Mr. Jong with documentation in support thereof, a statement of facts by Frans Bakker and a legal memorandum by Frans Bakker, both with documentation in support thereof.

DISCUSSION

A petition under 37 CFR 1.47(b) must be accompanied by: (1) the fee under 37 CFR 1.17(h), (2) factual proof that the inventor refuses to execute the application or cannot be reached after diligent effort, (3) a statement of the last known address of the inventor, (4) an oath or declaration by the 37 CFR 1.47(b) applicant on behalf of and as agent for the non-signing inventor, (5) proof that the 37 CFR 1.47(b) applicant has sufficient proprietary interest in the application, and (6) a showing that such action is necessary to preserve the rights of the parties or to prevent irreparable damage.

Items (1), (3), (4), and (6) have been met.

Item (2) has not been met. To establish a refusal to sign, it is required that the inventor be presented with the application papers (specification, including claims, drawings, and oath or declaration). See MPEP 409.03(d). "It is reasonable to require that the inventor be presented with the application papers before a petition under 37 CFR 1.47 is granted since such a procedure ensures that the inventor is apprised of the application to which the oath or declaration is directed. *In re Gray*, 115 USPQ 80 (Comm'r Pat. 1956)." Here, from the English translations of the letters sent by Mr. Jong to non-signing inventor Mr. Meulenkamp on 15 September 2010 and 12 October 2010, it appears that Mr. Muelenkamp was presented with a declaration of inventors but not with a copy of the specification. Also, copies of the envelopes containing the letters sent by Mr. Jong and copies of what are presumably some sort of confirmation of delivery have been provided. However, English translations of these documents are required.

Item (5) has not been met. The legal memorandum by Frans Bakker has been considered as has the statement of facts by Frans Bakker and the letter from Frans Hobbelink dated 23 November 2010. MPEP § 409.03 states in part:

> A proprietary interest obtained other than by assignment or agreement to assign may be demonstrated by an appropriate legal memorandum to the effect that a court of competent jurisdiction (federal, state, or foreign) would by the weight of authority in that jurisdiction award title of the invention to the 37 CFR 1.47(b) applicant. The facts in support of any conclusion that a court would award title to the 37 CFR 1.47(b) applicant should be made of record by way of an affidavit or declaration of the person having firsthand knowledge of same. The legal memorandum should be prepared and signed by an attorney at law familiar with the law of the jurisdiction involved. A copy (in the English language) of a statute (if other than the United States statute) or a court decision (if other than a reported decision of a federal court or a decision reported in the United States Patents Quarterly) relied on to demonstrate a proprietary interest should be made of record.

Here, the legal memorandum does not appear to have been prepared and signed by an attorney at law. Additionally, it is not clear that either Mr. Bakker or Mr. Hobbelink have firsthand knowledge of the facts concerning whether the nature of the service entailed the use of Mr. Muelenkamp's special knowledge for the purposes of making inventions of the same kind as to that which the patent application relates (Dutch patent law 1995, Article 12(1)).

Accordingly, it is not appropriate to accord the national stage application status under 37 CFR 1.47(b) at this time.

CONCLUSION

For the above reasons, applicants' petition under 37 CFR 1.47(b) is **DISMISSED**, without prejudice.

If reconsideration on the merits of this petition is desired, a proper response must be filed within TWO (2) MONTHS from the mail date of this decision. Failure to timely file the proper response will result in abandonment of this application. Any reconsideration request should include a cover letter entitled "Renewed Petition Under 37 CFR 1.47(b)". No additional petition fee is required. Extensions of time may be obtained under 37 CFR 1.136(a).

Any further correspondence with respect to this matter may be filed electronically via EFS-Web selecting the document description "Petition for review and processing by the PCT Legal Office" or by mail addressed to Mail Stop PCT, Commissioner for Patents, Office of PCT Legal Administration, P.O. Box 1450, Alexandria, Virginia 22313-1450, with the contents of the letter marked to the attention of the Office of PCT Legal Administration.

/Daniel Stemmer/

Daniel Stemmer
Legal Examiner
PCT Legal Affairs
Office of Patent Cooperation Treaty
Legal Administration
Telephone: (571) 272-3301

UNITED STATES PATENT AND TRADEMARK OFFICE

Commissioner for Patents
United States Patent and Trademark Office
P.O. Box 1450
Alexandria, VA 22313-1450
www.uspto.gov

MAILED

JUN 21 2011

PCT LEGAL ADMINISTRATION

THE WEBB LAW FIRM, P.C.
ONE GATEWAY CENTER
420 FT. DUQUESNE BLVD, SUITE 1200
PITTSBURGH PA 15222

In re Application of	:	DECISION ON
MEULENKAMP	:	
Application No.: 12/864,759	:	PETITION UNDER
PCT No.: PCT/NL2009/050040	:	
Int. Filing Date: 28 January 2009	:	37 CFR § 1.47(b)
Priority Date: 29 January 2008	:	
Attorney Docket No.: 6012-102113	:	
For: CONVEYOR BELT	:	

This is a decision on applicant's renewed petition under 37 CFR 1.47(b) filed in the United States Patent and Trademark Office (USPTO) on 14 April 2011. The petition is **DISMISSED** without prejudice.

BACKGROUND

On 28 January 2009, applicant filed international application PCT/NL2009/050040, which designated the US and claimed a priority date of 29 January 2008. A copy of the international application was communicated to the United States Patent and Trademark Office (USPTO) from the International Bureau on 06 August 2009. The thirty-month period for paying the basic national fee in the United States expired at midnight on 29 July 2010.

On 27 July 2010, applicant filed a submission for entry into the national stage in the United States which was accompanied by, *inter alia*, the U.S. Basic National Fee.

On 08 September 2010, the United States Designated/Elected Office (DO/EO/US) mailed a NOTIFICATION OF MISSING REQUIREMENTS UNDER 35 U.S.C. 371 (Form PCT/DO/EO/905) indicating, *inter alia*, that an oath or declaration of the inventors in compliance with 37 CFR 1.497(a)-(b) was required.

On 10 January 2011, applicant submitted a petition under 37 CFR 1.47(b). The petition was accompanied by, *inter alia*, a petition/fee for a two-month extension of time, a declaration of the inventor, a statement of facts by a Mr. Jong with documentation in support thereof, a statement of facts by Frans Bakker and a legal memorandum by Frans Bakker, both with documentation in support thereof.

On 14 February 2011, a decision was issued dismissing without prejudice applicant's petition under 37 CFR 1.47(b).

On 14 April 2011, applicant submitted the instant renewed petition under 37 CFR 1.47(b) which was accompanied by, *inter alia*, a legal memorandum by Bastiaan Jacob 't Jong with documentation in support thereof.

DISCUSSION

A petition under 37 CFR 1.47(b) must be accompanied by: (1) the fee under 37 CFR 1.17(h), (2) factual proof that the inventor refuses to execute the application or cannot be reached after diligent effort, (3) a statement of the last known address of the inventor, (4) an oath or declaration by the 37 CFR 1.47(b) applicant on behalf of and as agent for the non-signing inventor, (5) proof that the 37 CFR 1.47(b) applicant has sufficient proprietary interest in the application, and (6) a showing that such action is necessary to preserve the rights of the parties or to prevent irreparable damage.

As noted in the decision issued 14 February 2011, items (1), (3), (4), and (6) have been met.

Item (2) has now been met as well. It has been established that non-signing inventor Mr. Meulenkamp has been presented with the application papers including the specification, claims, and drawings. Mr. Meulenkamp conduct constitutes a refusal to sign.

Item (5) has not been met. The legal memorandum by Bastian Jacob 't Jong is confusing. Dutch Patent Law Article 12(1) (Exhibit G of the petition filed 10 January 2011) states that "the employee shall be entitled to the patent **unless** the nature of the service entails the use of the employee's special knowledge for the purposes of making inventions of the same kind as that to which the patent application relates. Should the latter be the case, **the employer** shall be entitled to the patent"(emphasis added). However, the legal memorandum states that "the rights to all inventions made by an employee who **did not** use his special knowledge for the purpose of making inventions belong to the **employer**" (emphasis added) and that Mr. Meulenkamp "did not use his special knowledge for the purposes of making inventions of the same kind as that to which the present patent application relates" (emphasis added). I.e., the legal memorandum appears to interpret the law in a manner contrary to its plain wording. Clarification is required.

Accordingly, it is not appropriate to accord the national stage application status under 37 CFR 1.47(b) at this time.

CONCLUSION

For the above reasons, applicants' petition under 37 CFR 1.47(b) is **DISMISSED**, without prejudice.

If reconsideration on the merits of this petition is desired, a proper response must be filed within TWO (2) MONTHS from the mail date of this decision. Failure to timely file the proper response will result in abandonment of this application. Any reconsideration request should include a cover letter entitled "Renewed Petition Under 37 CFR 1.47(b)". No additional petition fee is required. Extensions of time may be obtained under 37 CFR 1.136(a).

Any further correspondence with respect to this matter may be filed electronically via EFS-Web selecting the document description "Petition for review and processing by the PCT Legal Office" or by mail addressed to Mail Stop PCT, Commissioner for Patents, Office of PCT Legal Administration, P.O. Box 1450, Alexandria, Virginia 22313-1450, with the contents of the letter marked to the attention of the Office of PCT Legal Administration.

/Daniel Stemmer/

Daniel Stemmer
Legal Examiner
PCT Legal Affairs
Office of Patent Cooperation Treaty
Legal Administration
Telephone: (571) 272-3301

UNITED STATES PATENT AND TRADEMARK OFFICE

Commissioner for Patents
United States Patent and Trademark Office
P.O. Box 1450
Alexandria, VA 22313-1450
www.uspto.gov

MAILED

OCT 04 2011

PCT LEGAL ADMINISTRATION

THE WEBB LAW FIRM, P.C.
ONE GATEWAY CENTER
420 FT. DUQUESNE BLVD, SUITE 1200
PITTSBURGH PA 15222

In re Application of	:	DECISION ON
MEULENKAMP	:	
Application No.: 12/864,759	:	PETITION UNDER
PCT No.: PCT/NL2009/050040	:	
Int. Filing Date: 28 January 2009	:	37 CFR § 1.47(b)
Priority Date: 29 January 2008	:	
Attorney Docket No.: 6012-102113	:	
For: CONVEYOR BELT	:	

This is a decision on applicant's renewed petition under 37 CFR 1.47(b) filed in the United States Patent and Trademark Office (USPTO) on 02 August 2011. The petition is **GRANTED**.

BACKGROUND

On 28 January 2009, applicant filed international application PCT/NL2009/050040, which designated the US and claimed a priority date of 29 January 2008. A copy of the international application was communicated to the United States Patent and Trademark Office (USPTO) from the International Bureau on 06 August 2009. The thirty-month period for paying the basic national fee in the United States expired at midnight on 29 July 2010.

On 27 July 2010, applicant filed a submission for entry into the national stage in the United States which was accompanied by, *inter alia*, the U.S. Basic National Fee.

On 08 September 2010, the United States Designated/Elected Office (DO/EO/US) mailed a NOTIFICATION OF MISSING REQUIREMENTS UNDER 35 U.S.C. 371 (Form PCT/DO/EO/905) indicating, *inter alia*, that an oath or declaration of the inventors in compliance with 37 CFR 1.497(a)-(b) was required.

On 10 January 2011, applicant submitted a petition under 37 CFR 1.47(b). The petition was accompanied by, *inter alia*, a petition/fee for a two-month extension of time, a declaration of the inventor, a statement of facts by a Mr. Jong with documentation in support thereof, a statement of facts by Frans Bakker and a legal memorandum by Frans Bakker, both with

documentation in support thereof.

On 14 February 2011, a decision was issued dismissing without prejudice applicant's petition under 37 CFR 1.47(b).

On 14 April 2011, applicant submitted a renewed petition under 37 CFR 1.47(b) which was accompanied by, *inter alia*, a legal memorandum by Bastiaan Jacob 't Jong with documentation in support thereof.

On 21 June 2011, a decision was issued dismissing without prejudice applicant's petition under 37 CFR 1.47(a).

On 02 August 2011, applicant filed the instant renewed petition which was accompanied by, *inter alia*, a second legal memorandum by Bastiaan Jacob 't Jong.

DISCUSSION

A petition under 37 CFR 1.47(b) must be accompanied by: (1) the fee under 37 CFR 1.17(h), (2) factual proof that the inventor refuses to execute the application or cannot be reached after diligent effort, (3) a statement of the last known address of the inventor, (4) an oath or declaration by the 37 CFR 1.47(b) applicant on behalf of and as agent for the non-signing inventor, (5) proof that the 37 CFR 1.47(b) applicant has sufficient proprietary interest in the application, and (6) a showing that such action is necessary to preserve the rights of the parties or to prevent irreparable damage.

As noted in the decision issued 14 February 2011, items (1), (3), (4), and (6) have been met.

As noted in the decision issued 21 June 2011, item (2) has been met.

Item (5) has now been met as well. The decision issued 21 June 2011 indicated that the legal memorandum by Bastian Jacob 't Jong filed 14 April 2011 was confusing and that clarification was required. The second legal memorandum by Bastian Jacob 't Jong accompanying the instant petition clarifies the earlier memorandum. This second legal memorandum is also sufficient to establish that the 37 CFR 1.47(b) applicant Frans Bakker Beheer B.B. has sufficient proprietary interest in the instant application.

CONCLUSION

For the above reasons, applicants' renewed petition under 37 CFR 1.47(b) is **GRANTED**.

As provided in 37 CFR 1.47(b), a notice of the filing of this application will be forwarded to non-signing inventor at his last known address of record.

A notice of the filing of the application under 37 CFR 1.47(b) will be published in the Official Gazette.

This application is being forwarded to the National Stage Processing Branch of the Office of PCT Operations to continue national stage processing of the application, including the accordation of a 35 U.S.C. §§371(c)(1), (c)(2), and (c)(4) date of **10 January 2011**.

/Daniel Stemmer/

Daniel Stemmer
Legal Examiner
PCT Legal Affairs
Office of Patent Cooperation Treaty
Legal Administration
Telephone: (571) 272-3301

UNITED STATES PATENT AND TRADEMARK OFFICE

Commissioner for Patents
United States Patent and Trademark Office
P.O. Box 1450
Alexandria, VA 22313-1450
www.uspto.gov

MAILED

OCT 04 2011

PCT LEGAL ADMINISTRATION

Hennie Hermanus Jozef Meulenkamp
Walfkaterweg 73
NL-7554 PL Hengelo
THE NETHERLANDS

In re Application of
MEULENKAMP
Application No.: 12/864,759
PCT No.: PCT/NL2009/050040
Int. Filing Date: 28 January 2009
Priority Date: 29 January 2008
Attorney Docket No.: 6012-102113
For: CONVEYOR BELT

Dear Mr. Meulenkamp:

You are named as an inventor in the above-captioned United States national stage application, filed under the provisions of 37 CFR 1.47(a) and 35 U.S.C. 116. Should a patent be granted, you will be designated as an inventor.

As a named inventor, you are entitled to inspect any paper in the file wrapper of the application, order copies of all or any part thereof (at a prepaid cost per 37 CFR 1.19) or to make your position of record in the application. Alternatively, you may arrange to do any of the preceding through a registered patent agent or attorney presenting written authorization from you. Joining in the application would entail the filing of an appropriate oath or declaration by you pursuant to 37 CFR 1.63.

/Daniel Stemmer/

Daniel Stemmer
PCT Legal Examiner
PCT Legal Affairs
Office of Patent Cooperation Treaty
Legal Administration
Telephone: (571) 272-3301

THE WEBB LAW FIRM, P.C.
ONE GATEWAY CENTER
420 FT. DUQUESNE BLVD, SUITE 1200
PITTSBURGH PA 15222

UNITED STATES PATENT AND TRADEMARK OFFICE

Commissioner for Patents
United States Patent and Trademark Office
P.O. Box 1450
Alexandria, VA 22313-1450
www.uspto.gov

MAILED

MAY 11 2011

PCT LEGAL ADMINISTRATION

FOLEY AND LARDNER LLP
SUITE 500
3000 K STREET NW
WASHINGTON DC 20007

In re Application of	:	
JORDAN	:	
Application No.: 12/864,793	:	DECISION ON RESPONSE
PCT No.: PCT/DE09/00196	:	
Int. Filing Date: 11 February 2009	:	TO NOTIFICATION OF
Priority Date: 11 February 2008	:	
Attorney Docket No.: 098567-0107	:	DEFECTIVE RESPONSE
For: IMPLANTABLE PRODUCTS COMPRISING	:	
NANOPARTICLES	:	

This is a decision on applicant's Response to the Notification of Defective Response filed in the United States Patent and Trademark Office on 04 March 2011.

BACKGROUND

On 27 July 2010, applicant filed a transmittal letter concerning a filing under 35 U.S.C. 371 accompanied by the basic national fee.

On 01 September 2010, a Notification of Missing Requirements (Form PCT/DO/EO/905) was mailed to applicant indicating that an oath or declaration, in compliance with 37 CFR 1.497(a) and (b), and the surcharge for filing the oath or declaration after the thirty month period, was required.

On 01 December 2010, applicant responded to the Notification with an executed declaration. The declaration was executed by THIESEN and JORDAN, who were identified as inventors of the above referenced PCT application.

On 07 February 2011, a Notification of Defective Response (Form PCT/DO/EO/916) was mailed to applicant indicating that the declaration was not in compliance with 37 CFR 1.497(a) and (b) because the inventor THIESEN was identified on the declaration whereas the inventor identified in the published international application was JORDAN.

On 04 March 2011, applicant filed a response to the Form 916, a petition under 37 CFR 1.497(d).

DISCUSSION

To change the inventorship, a petition under 37 CFR 1.497(d) is required. See MPEP §1893.01(e). Where the oath or declaration filed pursuant to 35 U.S.C. 371(c)(4) and 37 CFR 1.497(d) names an inventive entity different from the inventive entity set forth in the international application, the oath or declaration must be accompanied by: (1) a statement from each person being added as an inventor that any error in inventorship occurred without deceptive intention on his or her part; (2) the fee set forth in § 1.17(i); and (3) if an assignment has been executed by any of the original named inventors, the written consent of the assignee(s) (See 37 CFR 3.73(b)).

With the submission, Applicant has satisfied Items (1), (2) and (3). Applicant's petition under 37 CFR 1.497(d) is granted.

CONCLUSION

The petition under 37 CFR 1.497(d) in the above-captioned application is hereby **GRANTED.**

The application will be forwarded to the United States Designated/Elected Office for further processing.

/Cynthia M. Kratz/
Cynthia M. Kratz
Attorney Advisor
PCT Legal Office
Office of PCT Legal Administration
Telephone: (571)272-3286

UNITED STATES PATENT AND TRADEMARK OFFICE

16 AUG 2010

Commissioner for Patents
United States Patent and Trademark Office
P.O. Box 1450
Alexandria, VA 22313-1450
www.uspto.gov

Law Office of Michael D. Eisenberg
Intellectual Property Law
3258 Caminito Eastbluff
Suite 89
San Diego CA 92037

In re Application of	:	
ABOLKHEIR	:	DECISION ON PETITION
Application No.: 12/864,813	:	
PCT No.: PCT/GB08/04285	:	UNDER
Int'l Filing Date: 24 December 2008	:	
Priority Date: 27 December 2007	:	37 CFR1.137(b)
Attorney Docket No.: ABOLKHEIR-P007	:	
For: A ROCKING CHAIR MECHANISM	:	

The petition to revive under 37 CFR 1.137(b) filed 27 July 2010 in the above-captioned application is hereby **GRANTED** .

Applicant's statement that "the entire delay in filing the required reply from the due date for the required reply until the filing of a grantable petition under 37 CFR 1.137(b) was unintentional" meets the requirements of 37 CFR 1.137(b)(3).

A review of the application file reveals that the petition fee of $810 has been paid and the basic national fee of $165 was provided. Thus, the requirements of 37 CFR 1.137(b) have been satisfied. Therefore, the request to revive the application abandoned under 35 U.S.C. 371(d) is granted as to the National stage in the United States of America.

This application is being forwarded to the United States Designated/Elected Office for further processing.

/Cynthia M. Kratz/
Cynthia M. Kratz
Attorney Advisor
Office of PCT Legal Administration
Telephone: (571)272-3286

UNITED STATES PATENT AND TRADEMARK OFFICE

COMMISSIONER FOR PATENTS
UNITED STATES PATENT AND TRADEMARK OFFICE
P.O. BOX 1450
ALEXANDRIA, VA 22313-1450
www.uspto.gov

DICKINSON WRIGHT PLLC
JAMES E. LEDBETTER, ESQ.
INTERNATIONAL SQUARE
1875 EYE STREET, N.W.; SUITE 1200
WASHINGTON, DC 20006

MAILED
FEB 02 2011
PCT LEGAL ADMINISTRATION

In re Application of MIYOSHI et al :
U.S. Application No.: 12/864,848 :
PCT Application No.: PCT/JP2009/000367 :
Int. Filing Date: 30 January 2009 : DECISION
Priority Date Claimed: 31 January 2008 :
Attorney Docket No.: 009289-10168 :
For: RADIO COMMUNICATION DEVICE AND :
ERROR CORRECTION/ENCODING METHOD :

This is in response to the correspondence filed 03 January 2011, which is being treated as a request for status under 37 CFR 1.42.[1]

BACKGROUND

On 30 January 2009, applicant filed international application PCT/JP2009/000367, which claimed priority of an earlier Japan application filed 31 January 2008. A copy of the international application was communicated to the USPTO from the International Bureau on 06 August 2009. The thirty-month period for paying the basic national fee in the United States expired on 31 July 2010.

On 27 July 2010, applicant filed national stage papers in the United States Designated/Elected Office (DO/EO/US). The submission was accompanied by, *inter alia*, the basic national fee required by 35 U.S.C. 371(c)(1).

On 31 August 2010, the DO/EO/US mailed a Notification of Missing Requirements Under 35 U.S.C. 371 (Form PCT/DO/EO/905), which indicated that an oath or declaration in compliance with 37 CFR 1.497 must be filed.

[1] The request fails to state whether the first inventor is deceased or incapacitated. The Office will proceed on the assumption that the first inventor is deceased. If this interpretation is incorrect, applicant is required to promptly notify the Office.

On 03 January 2011, applicant filed the present request for status under 37 CFR 1.42 along with executed declarations.

DISCUSSION

37 CFR 1.42 provides, "In case of the death of the inventor, the legal representative (executor, administrator, etc.) of the deceased inventor may make the necessary oath or declaration, and apply for and obtain the patent."

Effective 07 November 2000, 37 CFR 1.497(b)(2) specifies that, where a person making the declaration is the legal representative of a deceased inventor, the declaration shall state the following: (1) the relationship of the person to the inventor, (2) the facts the inventor would have been required to state, upon information and belief, (3) that the person is the legal representative of the deceased inventor, and (4) the citizenship, residence, and mailing address of the legal representative.

The declaration filed 03 January 2011 fails to state one of the citizenship of the deceased inventor as required by 37 CFR 1.497(a)(3) and the citizenship of the legal representative as required by 37 CFR 1.497(b)(2). Applicant is advised that a singular indication of the citizenship in the signature block cannot be used for both purposes.

CONCLUSION

For the reasons above, the request for status under 37 CFR 1.42 is DISMISSED without prejudice.

If reconsideration on the merits of the request is desired, a proper response must be filed within TWO (2) MONTHS from the mail date of this decision. Failure to timely file a proper response will result in ABANDONMENT of the application. Extensions of time are available under 37 CFR 1.136(a). Any reconsideration request should include a cover letter entitled "Renewed Request for Status Under 37 CFR 1.42".

Any further correspondence with respect to this matter may be filed electronically via EFS-Web selecting the document description "Petition for review and processing by the PCT Legal Office" or by mail addressed to Mail Stop PCT, Commissioner for Patents, Office of PCT Legal Administration, P.O. Box 1450, Alexandria, Virginia 22313-1450, with the contents of the letter marked to the attention of the Office of PCT Legal Administration.

Bryan Lin

Bryan Lin
PCT Legal Examiner
PCT Legal Office

Telephone: 571-272-3303
Facsimile: 571-273-0459

UNITED STATES PATENT AND TRADEMARK OFFICE

Commissioner for Patents
United States Patent and Trademark Office
P.O. Box 1450
Alexandria, VA 22313-1450
www.uspto.gov

DICKINSON WRIGHT PLLC
JAMES E. LEDBETTER, ESQ.
INTERNATIONAL SQUARE
1875 EYE STREET, N.W., SUITE 1200
WASHINGTON, DC 20006

MAILED
OCT 14 2011
PCT LEGAL ADMINISTRATION

In re Application of MIYOSHI et al :
U.S. Application No.: 12/864,848 :
PCT Application No.: PCT/JP2009/000367 :
Int. Filing Date: 30 January 2009 : DECISION
Priority Date Claimed: 31 January 2008 :
Attorney Docket No.: 009289-10168 :
For: RADIO COMMUNICATION DEVICE AND :
ERROR CORRECTION/ENCODING METHOD :

This is in response to the renewed request for status under 37 CFR 1.42 filed 02 August 2011.

BACKGROUND

On 30 January 2009, applicant filed international application PCT/JP2009/000367, which claimed priority of an earlier Japan application filed 31 January 2008. A copy of the international application was communicated to the USPTO from the International Bureau on 06 August 2009. The thirty-month period for paying the basic national fee in the United States expired on 31 July 2010.

On 27 July 2010, applicant filed national stage papers in the United States Designated/Elected Office (DO/EO/US). The submission was accompanied by, *inter alia*, the basic national fee required by 35 U.S.C. 371(c)(1).

On 31 August 2010, the DO/EO/US mailed a Notification of Missing Requirements Under 35 U.S.C. 371 (Form PCT/DO/EO/905), which indicated that an oath or declaration in compliance with 37 CFR 1.497 must be filed.

On 03 January 2011, applicant filed a request for status under 37 CFR 1.42 along with executed declarations.

On 02 February 2011, this Office mailed a decision dismissing the 03 January 2011 request.

On 02 August 2011, applicant filed the instant renewed request for status under 37 CFR 1.42.

DISCUSSION

The declaration indicates that joint inventor Kenichi Miyoshi is deceased.

37 CFR 1.42 provides, "In case of the death of the inventor, the legal representative (executor, administrator, etc.) of the deceased inventor may make the necessary oath or declaration, and apply for and obtain the patent."

Effective 07 November 2000, 37 CFR 1.497(b)(2) specifies that, where a person making the declaration is the legal representative of a deceased inventor, the declaration shall state the following: (1) the relationship of the person to the inventor, (2) the facts the inventor would have been required to state, upon information and belief, (3) that the person is the legal representative of the deceased inventor, and (4) the citizenship, residence, and mailing address of the legal representative.

The declaration filed 02 August 2011 is in compliance with 37 CFR 1.42 and 1.497.

CONCLUSION

For the reasons above, the renewed request for status under 37 CFR 1.42 is GRANTED.

The application has an International Filing Date under 35 U.S.C. 363 of 30 January 2009, and a date under 35 U.S.C. 371(c)(1), (c)(2), and (c)(4) of 02 August 2011.

This application is being forwarded to the United States Designated/Elected Office (DO/EO/US) for further processing in accordance with this decision.

Bryan Lin

Bryan Lin
PCT Legal Examiner
PCT Legal Office

Telephone: 571-272-3303
Facsimile: 571-273-0459

Doc Code: PET.AUTO **Document Description: Petition automatically granted by EFS-Web**	PTO/SB/83 U.S. Patent and Trademark Office Department of Commerce

Electronic Petition Request	**REQUEST FOR WITHDRAWAL AS ATTORNEY OR AGENT AND CHANGE OF CORRESPONDENCE ADDRESS**
Application Number	12864857
Filing Date	27-Jul-2010
First Named Inventor	Robert Holman
Art Unit	2875
Examiner Name	
Attorney Docket Number	040153-0123 US-NS
Title	THIN ILLUMINATION SYSTEM

◉ Please withdraw me as attorney or agent for the above identified patent application and the practitioners of record associated with Customer Number: 27433

The reason(s) for this request are those described in 37 CFR:

10.40(b)(4)

Certifications

☒ I/We have given reasonable notice to the client, prior to the expiration of the response period, that the practitioner(s) intend to withdraw from employment

☒ I/We have delivered to the client or a duly authorized representative of the client all papers and property (including funds) to which the client is entitled

☒ I/We have notified the client of any responses that may be due and the time frame within which the client must respond

Change the correspondence address and direct all future correspondence to the first named inventor or assignee that has properly made itself of record pursuant to 37 CFR 3.71:

Name	DOIC, INC.
Address	1820 RIDGE AVENUE
City	EVANSTON
State	IL
Postal Code	60201
Country	US

I am authorized to sign on behalf of myself and all withdrawing practitioners.	
Signature	/Michael D. Rechtin/
Name	Michael D. Rechtin
Registration Number	30128

UNITED STATES PATENT AND TRADEMARK OFFICE

Commissioner for Patents
United States Patent and Trademark Office
P.O. Box 1450
Alexandria, VA 22313-1450
www.uspto.gov

Decision Date : June 15,2011

In re Application of :

Robert Holman

Application No : 12864857

Filed : 27-Jul-2010

Attorney Docket No : 040153-0123 US-NS

DECISION ON REQUEST TO WITHDRAW AS ATTORNEY/AGENTOF RECORD

This is an electronic decision on the Request to Withdraw as attorney or agent of record under 37 CFR § 1.36(b), filed June 15,2011

The request is **APPROVED.**

The request was signed by Michael D. Rechtin (registration no. 30128) on behalf of all attorneys/agents associated with Customer Number 27433 . All attorneys/agents associated with Cusotmer Number 27433 have been withdrawn.

Since there are no remaining attorneys of record, all future communications from the Office will be directed to the first named inventor or assignee that has properly made itself of record pursuant to 37 CFR 3.71, with correspondence address:

Name	DOIC, INC.
Name2	
Address 1	1820 RIDGE AVENUE
Address 2	
City	EVANSTON
State	IL
Postal Code	60201
Country	US

As a reminder, requester is required to inform the first named inventor or assignee that has properly made itself of record pursuant to 37 CFR 3.71 of the electronically processed petition.

Telephone inquiries concerning this decision should be directed to the Patent Electronic Business Center (EBC) at 866-217-9197.

Office of Petitions

PTO/SB/20PCT-JP (05-10)
Approved for use through 01/31/2012. OMB 0651-0058
U.S. Patent and Trademark Office; U. S. DEPARTMENT OF COMMERCE
Under the Paperwork Reduction Act of 1995, no persons are required to respond to a collection of information unless it displays a valid OMB control number.

REQUEST FOR PARTICIPATION IN THE PATENT COOPERATION TREATY - PATENT PROSECUTION HIGHWAY (PCT-PPH) PILOT PROGRAM BETWEEN THE JAPAN PATENT OFFICE (JPO) AND THE USPTO

Application No:	12/864,860	Filing date:	2010/07/27
First Named Inventor:	Takayuki Matsuo		
Title of the Invention:	NETWORK COMMUNICATION APPARATUS, METHOD AND PROGRAM		

THIS REQUEST FOR PARTICIPATION IN THE PCT-PPH PILOT PROGRAM ALONG WITH THE REQUIRED DOCUMENTS MUST BE SUBMITTED VIA EFS-WEB. INFORMATION REGARDING EFS-WEB IS AVAILABLE AT HTTP://WWW.USPTO.GOV/EBC/EFS_HELP.HTML

APPLICANT HEREBY REQUESTS PARTICIPATION IN THE PCT-PPH PROGRAM AND PETITIONS TO MAKE THE ABOVE-IDENTIFIED APPLICATION SPECIAL UNDER THE PCT-PPH PROGRAM.

The above-identified application is (1) a national stage entry of the corresponding PCT application, or (2) a national stage entry of another PCT application which claims priority to the corresponding PCT application, or (3) a national application that claims domestic/ foreign priority to the corresponding PCT application, or (4) a national application which forms the basis for the priority claim in the corresponding PCT application, or (5) a continuing application of a U.S. application that satisfies one of (1) to (4) above, or (6) a U.S. application that claims domestic benefit to a U.S. provisional application which forms the basis for the priority claim in the corresponding PCT application.

The corresponding PCT application number(s) is/are: PCT/JP2010/057921

The international date of the corresponding PCT application(s) is/are: 2010/04/28

I. List of Required Documents:

a. **A copy of the latest international work product (WO/ISA, WO/IPEA, or IPER) in the above–identified corresponding PCT application(s)**

☐ Is attached.

☑ Is not attached because the document is already in the U.S. application.

b. **A copy of all claims which were indicated as having novelty, inventive step and industrial applicability in the above-identified corresponding PCT application(s).**

☐ Is attached.

☑ Is not attached because the document is already in the U.S. application.

c. **English translations of the documents in a. and b. above are attached (if the documents are not in the English language). A statement that the English translation is accurate is attached for the document in b. above.**

This collection of information is required by 35 U.S.C. 119, 37 CFR 1.55, and 37 CFR 1.102(d). The information is required to obtain or retain a benefit by the public, which is to file (and by the USPTO to process) an application. Confidentiality is governed by 35 U.S.C. 122 and 37 CFR 1.11 and 1.14. This collection is estimated to take 2 hours to complete, including gathering, preparing, and submitting the completed application form to the USPTO. Time will vary depending upon the individual case. Any comments on the amount of time you require to complete this form and/or suggestions for reducing this burden should be sent to the Chief Information Officer, U.S. Patent and Trademark Office, U.S. Department of Commerce, P.O. Box 1450, Alexandria, VA 22313-1450. DO NOT SEND FEES OR COMPLETED FORMS TO THIS ADDRESS.

Approved for use through 01/31/2012. OMB 0651-0058
U.S.Patent and Trademark Office; U.S. DEPARTMENT OF COMMERCE
Under the Paperwork Reduction Act of 1995, no persons are required to respond to a collection of information unless it displays a valid OMB control number.

REQUEST FOR PARTICIPATION IN THE PCT-PPH PILOT PROGRAM BETWEEN THE JPO AND THE USPTO

(continued)

Application No.:	12/864,860
First Named Inventor:	Takayuki Matsuo

d. **(1) An information disclosure statement listing the documents cited in the international work products (ISR, WO/ISA, WO/IPEA, IPER) of the corresponding PCT application.**

☐ Is attached

☑ Has already been filed in the above-identified U.S. application on 2010/07/27

(2) Copies of all documents (except) for U.S. patents or U.S. patent application publications)

☐ Are attached.

☑ Have already been filed in the above-identified U.S. application on 2010/10/15

II. Claims Correspondence Table:

Claims in US Application	Patentable Claims in the corresponding PCT Application	Explanation regarding the correspondence
1	1	Both claims are substantially same.
2	2	Both claims are substantially same.
3	3	Substantially same except for claim dependency.
4	4	Substantially same except for claim dependency.
5	5	Substantially same except for claim dependency.
6	6	Both claims are substantially same.
7	7	Both claims are the same.
8	8	Both claims are substantially same.
9	9	Both claims are substantially same.

III. All the claims in the US application sufficiently correspond to the patentable claims in the corresponding PCT application.

Signature /Edward Kmett/	Date October 31, 2011
Name (Print/Typed) Edward A. Kmett	Registration Number 42,746

Privacy Act Statement

The **Privacy Act of 1974 (P.L. 93-579)** requires that you be given certain information in connection with your submission of the attached form related to a patent application or patent. Accordingly, pursuant to the requirements of the Act, please be advised that: (1) the general authority for the collection of this information is 35 U.S.C. 2(b)(2); (2) furnishing of the information solicited is voluntary; and (3) the principal purpose for which the information is used by the U.S. Patent and Trademark Office is to process and/or examine your submission related to a patent application or patent. If you do not furnish the requested information, the U.S. Patent and Trademark Office may not be able to process and/or examine your submission, which may result in termination of proceedings or abandonment of the application or expiration of the patent.

The information provided by you in this form will be subject to the following routine uses:

1. The information on this form will be treated confidentially to the extent allowed under the Freedom of Information Act (5 U.S.C. 552) and the Privacy Act (5 U.S.C 552a). Records from this system of records may be disclosed to the Department of Justice to determine whether disclosure of these records is required by the Freedom of Information Act.
2. A record from this system of records may be disclosed, as a routine use, in the course of presenting evidence to a court, magistrate, or administrative tribunal, including disclosures to opposing counsel in the course of settlement negotiations.
3. A record in this system of records may be disclosed, as a routine use, to a Member of Congress submitting a request involving an individual, to whom the record pertains, when the individual has requested assistance from the Member with respect to the subject matter of the record.
4. A record in this system of records may be disclosed, as a routine use, to a contractor of the Agency having need for the information in order to perform a contract. Recipients of information shall be required to comply with the requirements of the Privacy Act of 1974, as amended, pursuant to 5 U.S.C. 552a(m).
5. A record related to an International Application filed under the Patent Cooperation Treaty in this system of records may be disclosed, as a routine use, to the International Bureau of the World Intellectual Property Organization, pursuant to the Patent Cooperation Treaty.
6. A record in this system of records may be disclosed, as a routine use, to another federal agency for purposes of National Security review (35 U.S.C. 181) and for review pursuant to the Atomic Energy Act (42 U.S.C. 218(c)).
7. A record from this system of records may be disclosed, as a routine use, to the Administrator, General Services, or his/her designee, during an inspection of records conducted by GSA as part of that agency's responsibility to recommend improvements in records management practices and programs, under authority of 44 U.S.C. 2904 and 2906. Such disclosure shall be made in accordance with the GSA regulations governing inspection of records for this purpose, and any other relevant (*i.e.*, GSA or Commerce) directive. Such disclosure shall not be used to make determinations about individuals.
8. A record from this system of records may be disclosed, as a routine use, to the public after either publication of the application pursuant to 35 U.S.C. 122(b) or issuance of a patent pursuant to 35 U.S.C. 151. Further, a record may be disclosed, subject to the limitations of 37 CFR 1.14, as a routine use, to the public if the record was filed in an application which became abandoned or in which the proceedings were terminated and which application is referenced by either a published application, an application open to public inspection or an issued patent.
9. A record from this system of records may be disclosed, as a routine use, to a Federal, State, or local law enforcement agency, if the USPTO becomes aware of a violation or potential violation of law or regulation.

UNITED STATES PATENT AND TRADEMARK OFFICE

UNITED STATES DEPARTMENT OF COMMERCE
United States Patent and Trademark Office
Address: COMMISSIONER FOR PATENTS
P.O. Box 1450
Alexandria, Virginia 22313-1450
www.uspto.gov

APPLICATION NO.	FILING DATE	FIRST NAMED INVENTOR	ATTORNEY DOCKET NO.	CONFIRMATION NO.
12/864,860	07/27/2010	Takayuki Matsuo	00862.172798.	8520

5514 7590 11/28/2011
FITZPATRICK CELLA HARPER & SCINTO
1290 Avenue of the Americas
NEW YORK, NY 10104-3800

EXAMINER
BANKS HAROLD, MARSHA DENISE

ART UNIT	PAPER NUMBER
2465	

MAIL DATE	DELIVERY MODE
11/28/2011	PAPER

Please find below and/or attached an Office communication concerning this application or proceeding.

The time period for reply, if any, is set in the attached communication.

UNITED STATES PATENT AND TRADEMARK OFFICE

Commissioner for Patents
United States Patent and Trademark Office
P.O. Box 1450
Alexandria, VA 22313-1450
www.uspto.gov

FITZPATRICK CELLA HARPER & SCINTO
1290 Avenue of the Americas
NEW YORK NY 10104-3800

In re Application of: Takayuki Matsuo
Application No. 12/864,860
Filed: July 27, 2010
For: **NETWORK COMMUNICATION APPARATUS, METHOD AND PROGRAM**

DECISION ON REQUEST TO PARTICIPATE IN PCT-PATENT PROSECUTION HIGHWAY PROGRAM AND PETITION TO MAKE SPECIAL UNDER 37 CFR 1.102(a)

This is a decision on the request to participate in the PCT- Patent Prosecution Highway (PPH) pilot program and the petition under 37 CFR 1.102(a), filed October 31, 2011, to make the above-identified application special.

The petition is **GRANTED.**

A grantable request to participate in the PCT PPH program and petition to make special require:

(1) The relationship between the corresponding U.S. application for which participation in the PCT-PPH pilot program is requested and the PCT application satisfies one of the following:

(a) The U.S. application is a national stage entry of the corresponding PCT application.

(b)The U.S. application is a national application which forms the basis for the priority claim in the corresponding PCT application.

(c) The U.S. application is a national stage entry of another PCT application (which can be filed in any competent receiving office) which claims priority to the corresponding PCT application.

(d) The U.S. application is a national application claiming foreign/domestic priority to the corresponding PCT application.

(e) The U.S. application is a continuing application (continuation, divisional, or continuation-in-part) of the U.S. application which satisfies one of the above (a) to (d) scenarios.

(2) The latest work product in the international phase of the PCT application corresponding to the U.S. application indicates at least one claim in the PCT application has novelty, inventive step and industrial

applicability. In case any observation is described in Box VIII of the WO/ISA, or WO/IPEA, or IPER which forms the basis for the PCT-PPH request, applicant must identify and explain why the claim(s) is/are not subject to any observation described in Box VIII irrespective of whether an amendment is submitted to correct the observation described in Box VIII.

(3) All the claims in each U.S. application for which a request for participation in the PCT-PPH pilot program is made must sufficiently correspond to one or more of those claims indicated as having novelty, inventive step and industrial applicability and free of any observation described in Box VIII in the latest work product of the corresponding PCT application.

(4) Substantive examination of the U.S. application for which participation in the PCT-PPH pilot program is requested has not begun.

(5) Applicant must submit a copy of the latest international work product which indicated that the claim(s) has/have novelty, inventive step and industrial applicability along with an English translation thereof if the copy of the latest international work product is not in the English language.

(6) Applicant must submit a copy of the claims from the corresponding PCT application which were indicated as having novelty, inventive step and industrial applicability in the latest work product of the PCT application along with an English translation thereof and a statement that the English translation is accurate if the claims are not in the English language. Applicant is required to submit a claims correspondence table in English. The claims correspondence table must indicate how all the claims in the U.S. application sufficiently correspond to the claims indicated as having novelty, inventive step and industrial applicability in the latest international work product. *If the claims in the U.S. application for which participation in the PCT-PPH pilot program is requested are identical to the claims from the corresponding PCT application, and are in the English language, applicant may just indicate such in the PCT-PPH request and it will not be necessary for applicant to submit a copy of the claims from the corresponding PCT application.*

(7) Applicant must submit an information disclosure statement (IDS) listing the documents cited in the international work products (ISR, WOIISA, WOIIPEA, PER) of the PCT.

(8) The request for participation in the PCT-PPH pilot program and all the supporting documents must be submitted to the USPTO via EFS-Web and indexed with the following document description: "Petition to make special under PCT-Patent Pros Hwy. Any preliminary amendments and IDS submitted with the PCT-PPH documents must be separately indexed as a preliminary amendment and IDS, respectively.

The request to participate in the PCT-PPH program and petition comply with all the above requirements. Accordingly, the above-identified application has been accorded "special" status.

Telephone inquiries concerning this decision should be directed to Christopher Grant at 571-272-7294.

All other inquiries concerning the examination or status of the application is accessible in the PAIR system at http://www.uspto.gov/ebc/index.html.

The application is being forwarded to the examiner for action on the merits commensurate with this decision

/Christopher Grant/
Christopher Grant
Quality Assurance Specialist
Technology Center 2400

UNITED STATES PATENT AND TRADEMARK OFFICE

Commissioner for Patents
United States Patent and Trademark Office
P.O. Box 1450
Alexandria, VA 22313-1450
www.uspto.gov

GORDON E NELSON
PATENT ATTORNEY, PC
57 CENTRAL ST
PO BOX 782
ROWLEY MA 01969

MAILED

DEC 01 2011

OFFICE OF PETITIONS

In re Application of	:	
Jian Chen	:	
Application No. 12/864,870	:	DECISION ON PETITION
Filed: July 27, 2010	:	TO WITHDRAW
Attorney Docket No. **netvir01.002**	:	FROM RECORD

This is a decision on the Request to Withdraw as attorney or agent of record under 37 CFR § 1.36(b), filed November 16, 2011.

The request is **NOT APPROVED**.

A grantable request to withdraw as attorney/agent of record must be signed by every attorney/agent seeking to withdraw or contain a clear indication that one attorney is signing on behalf of another/others. The Office requires the practitioner(s) requesting withdrawal to certify that he, she, or they have: (1) given reasonable notice to the client, prior to the expiration of the response period, that the practitioner(s) intends to withdraw from employment; (2) delivered to the client or a duly authorized representative of the client all papers and property (including funds) to which the client is entitled; and (3) notified the client of any responses that may be due and the time frame within which the client must respond , pursuant to 37 CFR 10.40.

The request is not approved because the practitioner(s) lacks items (1) and (3) certifications mention above that is required under 37 CFR 10.40.

All future communications from the Office will continue to be directed to the above-listed address until otherwise notified by applicant.

Telephone inquires concerning this decision should be directed to the undersigned at (571) 272-4584.

/JoAnne Burke/
JoAnne Burke
Petitions Examiner
Office of Petitions

UNITED STATES PATENT AND TRADEMARK OFFICE

Commissioner for Patents
United States Patent and Trademark Office
P.O. Box 1450
Alexandria, VA 22313-1450
www.uspto.gov

GORDON E NELSON
PATENT ATTORNEY, PC
57 CENTRAL ST
PO BOX 782
ROWLEY MA 01969

MAILED

DEC 19 2011

OFFICE OF PETITIONS

In re Application of	:	
Jian Chen	:	
Application No. 12/864,870	:	DECISION ON PETITION
Filed: July 27, 2010	:	TO WITHDRAW
Attorney Docket No. **netvir01.002**	:	FROM RECORD
	:	

This is a decision on the Request to Withdraw as attorney or agent of record under 37 CFR § 1.36(b), filed December 9, 2011.

The request is **NOT APPROVED**.

The request cannot be approved because it lacks the name of the first inventor (Jian Chen) or the assignee of record that is associated with the address listed in the request. Therefore, the change of correspondence address is considered improper.

All future communications from the Office will continue to be directed to the above-listed address until otherwise notified by applicant.

Telephone inquires concerning this decision should be directed to the undersigned at (571) 272-4584.

/JoAnne Burke/
JoAnne Burke
Petitions Examiner
Office of Petitions

UNITED STATES PATENT AND TRADEMARK OFFICE

Commissioner for Patents
United States Patent and Trademark Office
P.O. Box 1450
Alexandria, VA 22313-1450
www.uspto.gov

GORDON E NELSON
PATENT ATTORNEY, PC
57 CENTRAL ST
PO BOX 782
ROWLEY MA 01969

MAILED

FEB 13 2012

OFFICE OF PETITIONS

In re Application of

Jian Chen
Application No. 12/864,870
Filed: July 27, 2010
Attorney Docket No. **netvir01.002**

DECISION ON PETITION
TO WITHDRAW
FROM RECORD

This is a decision on the renewed Request to Withdraw as attorney or agent of record under 37 CFR § 1.36(b), filed February 2, 2012.

The request is **APPROVED**.

A grantable request to withdraw as attorney/agent of record must be signed by every attorney/agent seeking to withdraw or contain a clear indication that one attorney is signing on behalf of another/others. The Office requires the practitioner(s) requesting withdrawal to certify that he, she, or they have: (1) given reasonable notice to the client, prior to the expiration of the response period, that the practitioner(s) intends to withdraw from employment; (2) delivered to the client or a duly authorized representative of the client all papers and property (including funds) to which the client is entitled; and (3) notified the client of any responses that may be due and the time frame within which the client must respond , pursuant to 37 CFR 10.40.

The request was signed by Gordon E. Nelson on behalf of all attorneys of record who are associated with Customer Number 25247.

All attorneys/agents associated with Customer Number 25247 have been withdrawn. Applicant is reminded that there is no attorney of record at this time.

The correspondence address of record has been changed and all future correspondence will be directed to the first named inventor Jian Chen at the address indicated below.

There is an outstanding Office action mailed December 8, 2011, that requires a reply from the applicant.

Telephone inquiries concerning this decision should be directed to the undersigned at 571-272-4584.

/JoAnne Burke/
JoAnne Burke
Petitions Examiner
Office of Petitions

cc: Jian Chen
51 Hill Road, Apt. #605
Belmont, MA 02478

UNITED STATES PATENT AND TRADEMARK OFFICE

UNITED STATES DEPARTMENT OF COMMERCE
United States Patent and Trademark Office
Address: COMMISSIONER FOR PATENTS
P.O. Box 1450
Alexandria, Virginia 22313-1450
www.uspto.gov

APPLICATION NUMBER	FILING OR 371(C) DATE	FIRST NAMED APPLICANT	ATTY. DOCKET NO./TITLE
12/864,870	07/27/2010	Jian Chen	netvir01.002

CONFIRMATION NO. 8742

POWER OF ATTORNEY NOTICE

OC000000052561891

25247
GORDON E NELSON
PATENT ATTORNEY, PC
57 CENTRAL ST
PO BOX 782
ROWLEY, MA 01969

Date Mailed: 02/13/2012

NOTICE REGARDING CHANGE OF POWER OF ATTORNEY

This is in response to the Power of Attorney filed 02/02/2012.

- The withdrawal as attorney in this application has been accepted. Future correspondence will be mailed to the new address of record. 37 CFR 1.33.

/jlburke/

Office of Data Management, Application Assistance Unit (571) 272-4000, or (571) 272-4200, or 1-888-786-0101

UNITED STATES PATENT and TRADEMARK OFFICE

24 SEP 2010

COMMISSIONER FOR PATENTS
UNITED STATES PATENT AND TRADEMARK OFFICE
P.O BOX 1450
ALEXANDRIA, VA 22313-1450
www.uspto.gov

KNOBBE MARTENS OLSON & BEAR LLP
2040 MAIN STREET
FOURTEENTH FLOOR
IRVINE CA 92614

In re Application of	DECISION ON
SOUSSAN et al	
Application No.: 12/864,871	
PCT No.: PCT/EP2008/068328	
Filing Date: 29 December 2008	PETITION UNDER
Priority Date: 27 December 2007	
Attorney's Docket No.: IMEC464.001APC	
For: METHOD FOR... BONDED ELEMENTS	37 CFR 1.137(b)

This decision is in response to applicants' "Petition For Revival Of An Application For Patent Abandoned Unintentionally Under 37 CFR 1.137(b)," filed 27 July 2010.

BACKGROUND

On 29 December 2008, this international application was filed, claiming an earliest priority date of 27 December 2007.

The deadline for paying the basic national fee in the United States under 35 U.S.C. 371 and 37 CFR 1.495 was 27 June 2010. This international application became abandoned with respect to the United States at midnight on 27 June 2010 for failure to pay the required basic national fee.

On 27 July 2010, applicant filed in the United States Patent and Trademark Office (PTO) a transmittal letter for entry into the national stage in the U.S. under 35 U.S.C. 371, which was accompanied by, *inter alia*, the national basic fee, petition fee, a petition under 37 CFR 1.137(b), and an executed declaration.

DISCUSSION

A grantable petition to revive an abandoned application under 37 CFR 1.137(b) must be accompanied by (1) the required reply, unless previously filed. In a nonprovisional application abandoned for failure to prosecute, the required reply may be met by the filing of a continuing application; (2) the petition fee as set forth in § 1.17(m); and (3) a statement that the entire delay in filing the required reply from the due date for the reply until the filing of a grantable petition pursuant to this paragraph was unintentional. The Commissioner may require additional information where there is a question whether the delay was unintentional; and (4) any terminal disclaimer (and fee as set forth in § 1.20 (d)) required pursuant to paragraph (c) of this section.

Petitioner has provided: (1) the proper reply by submitting the basic national filing fee, (2) the petition fee set forth in §1.17(m) and (3) the proper statement under 137(b)(3). In this application, no terminal disclaimer is required.

Accordingly, the petition is deemed to satisfy requirements (1), (2), (3), and (4) under 37 CFR 1.137(b).

DECISION

The petition under 37 CFR 1.137(b) is **GRANTED**.

This application is being returned to the United States Designated/Elected Office (DO/EO/US) for continued processing.

Rafael Bacares
PCT Legal Examiner
PCT Legal Office
Telephone: (571) 272-3276
Facsimile: (571) 273-0459

UNITED STATES PATENT AND TRADEMARK OFFICE

Commissioner for Patents
United States Patent and Trademark Office
P.O. Box 1450
Alexandria, VA 22313-1450
www.uspto.gov

Kunio Kamimura
4-29-15 Higashi-cho
Koganei-shi 184-0011
Japan

In re Application of Kamimura, Kunio Application No.: 12/864,872 PCT No.: PCT/JP2009/002491 Int. Filing Date: 03 June 2009 Priority Date: 04 June 2008 Atty. Docket No.: None For: DATABASE PARALLEL EDITING METHOD	: : : : : : : :	DECISION ON PETITION

This decision is issued in response to applicant's "Request For Corrected Filing Receipt" dated 16 January 2011, applicant's "Request for Correcting dates shown in Notice of Acceptance of Application" dated 16 January 2011 and 20 January 2011; and applicant's "Petition for Review and Processing By the PCT Legal" dated 11 February 2011, treated herein as a petition under 37 CFR 1.181. No petition fee is required.

BACKGROUND

On 03 June 2009, applicant filed international application PCT/JP2009/002491 which claimed a priority date of 04 June 2008. Pursuant to 37 CFR 1.495, the deadline for payment of the basic national fee in the United States was to expire 30 months from the priority date, 04 December 2010.

On 27 July 2010, applicant filed a request for entry into the U.S. national stage via the EFS-Web system accompanied by, among other materials, payment of the basic national fee, a purported English translation of the international application, and an executed declaration.

In response to the Notification of Missing Requirements (Form PCT/DO/EO/905) mailed 22 September 2010, applicant submitted an English translation of the international application on 18 November 2010.

On 03 January 2011, the United States Designated/Elected Office (DO/EO/US) mailed a "Notification Of Acceptance" (Form PCT/DO/EO/903) identifying the "Date Of Receipt Of 35 U.S.C. 371(c)(1), (c)(2), and (c)(4) Requirements as 18 November 2010 and the "Date Of Completion Of All 35 U.S.C. 371 Requirements" as 04 December 2010. Also on 27 March 2009, a filing receipt was issued that identified the "Filing Date or 371(c) Date" as 04 December 2010.

On 11 February 2011, applicants filed the "Petition for Review and Processing By the PCT Legal" considered herein.

DISCUSSION

The present petition requests a corrected Notification Of Acceptance identifying the "Date Of Receipt Of 35 U.S.C. 371(c)(1), (c)(2), and (c)(4) Requirements as 27 July 2010 and a corrected Official Filing Receipt identifying the "371(c) date" as 27 July 2010.

The actual filing date of the present application is considered to be the international filing date, 03 June 2009. The date in the filing date portion on the filing receipt of a national stage application is the date upon which the requirements set forth in 35 U.S.C. 371(c) for entry into the national stage were completed. (See Manuel of Patent Examining Procedure (MPEP) §1895.01) A review of the application file reveals that the English translation of the international application was filed with the USPTO on 18 November 2010, the date which the requirements set forth in 35 U.S.C. 371(c) for entry into the national stage were completed. Therefore, the correction of the Notification of Acceptance to indicate a date of 27 July 2010 is not proper since the requirements set forth in 35 U.S.C. 371 were completed on 18 November 2010. Additionally, the correction of the "FILING DATE" on the filing receipt to indicate a date of 27 July 2010 is not proper since applicant completed the requirements set forth in 35 U.S.C. 371(c) on 18 November 2010.

As discussed in MPEP §1893.03(b), the "Date Of Completion Of all 35 U.S.C. 371 Requirements" listed on the Notification Of Acceptance is not necessarily the same date as the date of receipt of the requirements of 35 U.S.C. 371(c)(1), (c)(2), and (c)(4). Rather, the MPEP sets forth the following criteria for determining the correct "Date Of Completion Of All 35 U.S.C. 371 Requirements:"

> The "Date of Completion of all 35 U.S.C. 371 Requirements" included on the NOTIFICATION OF ACCEPTANCE OF APPLICATION UNDER 35 U.S.C. 371 AND 37 CFR 1.495 (Form PCT/DO/EO/903) is ... the latest of:
>
> (A) the date of submission of the basic national fee;
>
> (B) the date of submission or communication of the copy of the international application;
>
> (C) the date of submission of the translation of the international application if the international application is not in the English language;
>
> (D) the date of submission of an oath or declaration of the inventor in compliance with 35 U.S.C. 371 (c)(4) (see 37 CFR 1.497(c) for an

explanation of when an oath or declaration will be accepted as complying with 35 U.S.C. 371(c)(4));

(E) the earlier of 30 months from the priority date or the date of request for early processing under 35 U.S.C. 371(f) if requested prior to 30 months from the priority date (Form PCT/DO/EO/903 will indicate the date early processing was requested);

(F) if a request for early processing has not been requested prior to 30 months from the priority date, the date of submission of any translation of the annexes to the international preliminary examination report if the translation of the annexes are filed within the time period set in a Notification of Missing Requirements (Form PCT/DO/EO/905) requiring either an English translation of the international application or an oath or declaration; and

(G) the date of submission of any surcharge for submitting the oath or declaration later than 30 months from the priority date.

Here, applicant did not request early processing of the application under 35 U.S.C. 371(f). Accordingly, based on the MPEP criteria (specifically, element "E" above), the correct "Date Of Completion Of All 35 U.S.C. 371 Requirements" is 04 December 2010, that is, 30 months from the priority date.

Based on the above, the listing of 04 December 2010 as the "Date Of Completion Of All 35 U.S.C. 371 Requirements" on the Notification Of Acceptance was correct; therefore, applicants' request that this date be corrected to18 November 2010, a date prior to "the earlier of 30 months from the priority date or the date of request for early processing under 35 U.S.C. 371(f)," is appropriately dismissed.

CONCLUSION

The petition to correct the Notification of Acceptance and Official Filing Receipt is DISMISSED without prejudice.

The Notification Of Acceptance mailed 03 January 2011 properly identifies the "Date Of Receipt Of 35 U.S.C. 371(c)(1), (c)(2), and (c)(4) Requirements as18 November 2010 and the "Date Of Completion Of All 35 U.S.C. 371 Requirements" as 04 December 2010.

Any further correspondence with respect to this matter may be filed electronically via EFS-Web selecting the document description "Petition for review and processing by the PCT Legal Office" or by mail addressed to Mail Stop PCT, Commissioner for Patents, Office of

PCT Legal Administration, P.O. Box 1450, Alexandria, Virginia 22313-1450, with the contents of the letter marked to the attention of the Office of PCT Legal Administration.

Anthony Smith
Attorney-Advisor
Office of PCT Legal Administration
Tel.: 571-272-3298

UNITED STATES PATENT AND TRADEMARK OFFICE

Commissioner for Patents
United States Patent and Trademark Office
P.O. Box 1450
Alexandria, VA 22313-1450
www.uspto.gov

MAILED

APR 20 2011

PCT LEGAL ADMINISTRATION

YOUNG & THOMPSON
209 Madison Street
Suite 500
Alexandria VA 22314

In re Application of PHATTARANAWIK et al.	:
Application No.: 12/864,883	: DECISION ON PETITION
PCT Appl No.: PCT/NO09/00032	:
Int'l Filing Date: 28 January 2009	: UNDER 37 CFR 1.47(a)
Priority Date: 28 January 2008	:
Attorney Docket No.:3658-1009	:
For: METHOD AND DEVICE FOR THE	:
TREATMENT OF WASTE WATER	:

This is a decision on applicant's petition under 37 CFR 1.47(a), filed in the United States Patent and Trademark Office (USPTO) on 20 December 2010, to accept the application without the signature of joint inventor JIRACHOTE PHATTARANAWIK. Petitioner's request for a three month extension of time is granted.

BACKGROUND

On 28 July 2010, applicant filed a transmittal letter requesting U.S. national stage entry of international application PCT/NO09/00032.

On 14 September 2010, a Notification to Missing Requirements was mailed to applicant indicating *inter alia*, that an oath or declaration, in accordance with 37 CFR 1.497(a) and (b), was required.

On 14 February 2011, applicant filed the instant petition along with a declaration, executed by the joint inventor on behalf of the nonsigning inventor. The petition under 37 CFR 1.47(a), in an attempt to satisfy the requirements of 35 U.S.C. 371(c)(4), requested the acceptance of the application without the signature of inventor JIRACHOTE PHATTARANAWIK alleging that the inventor refuses to sign the application papers.

DISCUSSION

A petition under 37 CFR §1.47(a) must be accompanied by (1) the fee under 37 CFR §1.17(g), (2) factual proof that the non-signing joint inventor(s) refuses to execute the application or cannot be reached after diligent effort, (3) a statement of the last known address of the non-signing inventor(s), and (4) an oath or declaration by each available joint inventor on his or her own behalf and on behalf of the non-signing joint inventor(s).

Petitioner satisfied Item (1) with the payment of the petition fee. Item (3) is satisfied because the last known address for the non-signing inventor was provided. Item (4) is satisfied with the submission of the declaration executed in compliance with 37 CFR 1.497(a) and (b).

With respect to Item (2) above, Section 409.03(d) of the Manual of Patent Examining Procedure (MPEP), Proof of Unavailability or Refusal, states, in pertinent part:

> A refusal by an inventor to sign an oath or declaration when the inventor has not been presented with the application papers does not itself suggest that the inventor is refusing to join the application unless it is clear that the inventor understands exactly what he or she is being asked to sign and refuses to accept the application papers. A copy of the application papers should be sent to the last known address of the nonsigning inventor, or, if the nonsigning inventor is represented by counsel, to the address of the nonsigning inventor's attorney.... *It is reasonable to require that the inventor be presented with the application papers before a petition under 37 CFR 1.47 is granted since such a procedure ensures that the inventor is apprised of the application to which the oath or declaration is directed. In re Gray*, 115 USPQ 80 (Comm'r Pat. 1956)
>
> Where a refusal of the inventor to sign the application papers is alleged, the circumstances of the presentation of the application papers and of the refusal must be specified in a statement of facts by the person who presented the inventor with the application papers and/or to whom the refusal was made. Statements by a party not present when an oral refusal is made will not be accepted.
>
> *Proof that a bona fide attempt was made to present a copy of the application papers (specification, including claims, drawings, and oath or declaration) to the nonsigning inventor for signature, but the inventor refused to accept delivery of the papers or expressly stated that the application papers should not be sent, may be sufficient.* When there is an express oral refusal, that fact along with the time and place of the refusal must be stated in the statement of facts. When there is an express written refusal, a copy of the document evidencing that refusal must be made part of the statement of facts. The document may be redacted to remove material not related to the inventor's reasons for refusal.
>
> When it is concluded by the 37 CFR 1.47 applicant that a nonsigning inventor's conduct constitutes a refusal, all facts upon which the conclusion is based should be stated in a statement of facts in support of the petition or directly in the petition. If there is documentary evidence to support facts alleged in the petition or any statement of facts, such evidence should be submitted. Whenever a nonsigning inventor gives a reason for refusing to sign the application oath or declaration, that reason should be stated in the petition.

(Emphasis added.)

MPEP Section 409.03(d) also provides guidance where inability to find or reach a nonsigning inventor "after diligent effort" is the reason for filing under 37 CFR 1.47. A statement of facts should be submitted that fully describes the exact facts which are relied on to establish that a diligent effort was made. The statement of facts must be signed, where at all possible, by a person having first-hand knowledge of the facts recited therein. Statements based on hearsay will not normally be accepted. *Copies of documentary evidence such as internet searches*, certified mail return receipts, cover letters of instructions, telegrams, that support a finding that the nonsigning inventor could not be found or reached should be made part of the statement. The steps taken to locate the whereabouts of the nonsigning inventor should be

included in the statement of facts. It is important that the statement contain facts as opposed to conclusions.

Petitioner submitted Hans-Christian Blom's first hand statement of facts under 37 CFR 1.47(a) detailing an attempt to deliver a complete copy of the application papers to the inventor. Mr. Blom states that the letter and accompanying documents were sent by registered mail to the last known address of the nonsigning inventor and were returned to him undelivered.

Mr. Blom does not detail the diligent efforts made to locate the nonsigning inventor through contact with the joint inventor to obtain the nonsigning inventor's current address, a forwarding address or current email address and/or current employer. No attempt to reach the nonsigning inventor by telephone was made. No request from the Postal Service for his forwarding address was made. Where inability to find or reach a nonsigning inventor "after diligent effort" is the reason for filing under 37 CFR 1.47, a statement of facts should be submitted that fully describes the exact facts which are relied on to establish that a "diligent effort" was made. While Mr. Blom states that he performed internet searches, copies of these searches did not accompany his statement. Therefore, it cannot be concluded at this time that the nonsigning inventor refuses or is unavailable to sign the application. Petitioner has not satisfied Item (2). Accordingly, it is inappropriate to accord the national stage application status under 37 CFR §1.47(a) at this time.

CONCLUSION

The petition under 37 CFR §1.47(a) is **DISMISSED WITHOUT PREJUDICE**.

Any reconsideration on the merits of the petition under 37 CFR §1.47(a) must be filed within TWO (2) MONTHS from the mail date of this decision. Any reconsideration request should include a cover letter entitled "Renewed Petition Under 37 CFR §1.47(a)." No petition fee is required. Any further extensions of time available may be obtained under 37 CFR 1.136(a).

Any further correspondence with respect to this matter may be filed electronically via EFS-Web selecting the document description "Petition for review and processing by the PCT Legal Office" or by mail addressed to Mail Stop PCT, Commissioner for Patents, Office of PCT Legal Administration, P.O. Box 1450, Alexandria, Virginia 22313-1450, with the contents of the letter marked to the attention of the Office of PCT Legal Administration.

/Cynthia M .Kratz/
Cynthia M. Kratz
Attorney Advisor
PCT Legal Office
Office of PCT Legal Administration
Telephone: (571) 272-3286
Facsimile (571) 272-0459

UNITED STATES PATENT AND TRADEMARK OFFICE

Commissioner for Patents
United States Patent and Trademark Office
P.O. Box 1450
Alexandria, VA 22313-1450
www.uspto.gov

MAILED

SEP 19 2011

PCT LEGAL ADMINISTRATION

YOUNG & THOMPSON
209 Madison Street
Suite 500
Alexandria VA 22314

In re Application of PHATTARANAWIK et al.	:
Application No.: 12/864,883	: DECISION ON PETITION
PCT Appl No.: PCT/NO09/00032	:
Int'l Filing Date: 28 January 2009	: UNDER 37 CFR 1.47(a)
Priority Date: 28 January 2008	:
Attorney Docket No.:3658-1009	:
For: METHOD AND DEVICE FOR THE	:
TREATMENT OF WASTE WATER	:

This is a decision on applicant's petition under 37 CFR 1.47(a), filed in the United States Patent and Trademark Office (USPTO) on 20 December 2010, to accept the application without the signature of joint inventor JIRACHOTE PHATTARANAWIK. Petitioner's request for a three month extension of time is granted.

BACKGROUND

On 28 July 2010, applicant filed a transmittal letter requesting U.S. national stage entry of international application PCT/NO09/00032.

On 14 September 2010, a Notification to Missing Requirements was mailed to applicant indicating *inter alia*, that an oath or declaration, in accordance with 37 CFR 1.497(a) and (b), was required.

On 14 February 2011, applicant filed the instant petition along with a declaration, executed by the joint inventor on behalf of the nonsigning inventor. The petition under 37 CFR 1.47(a), in an attempt to satisfy the requirements of 35 U.S.C. 371(c)(4), requested the acceptance of the application without the signature of inventor JIRACHOTE PHATTARANAWIK alleging that the inventor refuses to sign the application papers. On 20 April 2011, a decision dismissing the petition was mailed.

DISCUSSION

Petitioner has now presented the declaration signed by inventor JIRACHOTE PHATTARANAWIK. A review of the declaration reveals that the declaration identifies all the inventors named in the international application and is executed by the previously non-signing inventor. The declaration states the citizenship of each inventor. The declaration executed by inventor JIRACHOTE PHATTARANAWIK is acceptable.

The petition under 37 CFR 1.47(a) is considered moot as a declaration executed by the previously unavailable inventor has now been submitted. The declaration is acceptable under 37 CFR 1.497(a) and (b).

CONCLUSION

For the above reasons, the renewed petition under 37 CFR 1.47(a) is **DISMISSED AS MOOT**. The declaration executed by the joint inventors and submitted on 28 July 2011 is in compliance with 37 CFR 1.497(a) and (b) and is acceptable.

This application is being forwarded to United States Designated/Elected Office for further processing. The 35 U.S.C. 371(c)(1), (c)(2) and (c)(4) date is 28 July 2011.

/Cynthia M .Kratz/
Cynthia M. Kratz
Attorney Advisor
PCT Legal Office
Office of PCT Legal Administration
Telephone: (571) 272-3286
Facsimile (571) 272-0459

UNITED STATES PATENT AND TRADEMARK OFFICE

Commissioner for Patents
United States Patent and Trademark Office
P.O. Box 1450
Alexandria, VA 22313-1450
www.uspto.gov

January 5, 2012

MARTIN D. MOYNIHAN d/b/a PRTSI, INC.
P.O. BOX 16446
ARLINGTON VA 22215

In re Application of	:	
Uri Kushnir et al.	:	**DECISION ON PETITION**
Application No. 12864911	:	
Filed: 7/28/2010	:	***ACCEPTANCE OF COLOR***
Attorney Docket No. 49301	:	***DRAWINGS***

This is a decision on the Petition to Accept Color Drawings under 37 C.F.R 1.84 (a) (2), received in the United States Patent and Trademark Office (USPTO) July 28, 2010.

The petition is **GRANTED**.

A grantable petition under 37 C.F.R. 1.84(a) (2) must be accompanied by the following.

1. The fee set forth under 37 C.F.R. 1.17(h),
2. Three (3) sets of the color drawings in question, or (1) set if filed via EFS, and
3. The specification contains appropriate language referring to the color drawings as the first paragraph in that portion of the specification relating to the brief description of the drawings.

The petition was accompanied by all of the required fees and drawings. The specification contains the appropriate language. Therefore, the petition is GRANTED.

Telephone inquires relating to this decision may be directed to the undersigned in the Office of Data Management at 571-272-4200.

/Don Fairchild/
Office of Data Management
Publications Branch

UNITED STATES PATENT AND TRADEMARK OFFICE

Commissioner for Patents
United States Patent and Trademark Office
P.O. Box 1450
Alexandria, VA 22313-1450
www.uspto.gov

Carlson, Gaskey & Olds, P.C.
400 West Maple Road
Suite 350
Birmingham MI 48009

MAILED

NOV 22 2010

PCT LEGAL ADMINISTRATION

In re Application of
PONCET et al.
U.S. Application No.: 12/864,922
PCT No.: PCT/FR2009/050136
Int. Filing Date: 30 January 2009
Priority Date: 31 January 2008
Attorney Docket No.: PA0008081US;6703 . . . .
For: PNEUMATIC DRILL DEVICE

DECISION ON PETITION
UNDER 37 CFR 1.47(a)

This decision is issued in response to applicants' "Petition under 37 CFR 1.47(a)" filed 06 October 2010 to accept the application without the signature of joint-inventors, Julien Poncet and Patrice Charlat. The $200 petition fee has been submitted.

BACKGROUND

On 30 January 2009, applicants filed international application PCT/FR2009/050136 which claimed a priority date of 31 January 2008. A copy of the international application was communicated to the United States Patent and Trademark Office from the International Bureau on 06 August 2009. Pursuant to 37 CFR 1.495, the deadline for payment of the basic national fee in the United States was to expire 30 months from the priority date, 31 July 2010.

On 28 July 2010, applicants filed a transmittal letter for entry into the national stage in the United States, which accompanied by, inter alia: the requisite basic national fee as required by 35 U.S.C. 371(c)(1); a copy of the international application; a preliminary amendment, and an application data sheet.

On 23 September 2010, the United States Designated/Elected Office (DO/EO/US) mailed a Notification of Missing Requirements (Form PCT/DO/EO/905) requiring an oath or declaration. The notification set a two-month time limit in which to respond.

On 06 October 2010, applicants filed a Petition under 37 CFR 1.47(a).

DISCUSSION

A petition under 37 CFR 1.47(a) must be accompanied by: (1) the fee under 37 CFR 1.17(h), (2) factual proof that the missing joint inventor refuses to execute the application

or cannot be reached after diligent effort, (3) a statement of the last known address of the missing inventor, and (4) an oath or declaration by each 37 CFR 1.47(a) applicant on his or her own behalf and behalf of the nonsigning joint inventor.

Applicants here have submitted the appropriate petition fee. Item (1) is therefore satisfied.

As to item (2), petitioner states that Julien Poncet and Patrice Charlat cannot be found or reached after diligent effort. Section 409.03(d) of the Manual of Patent Examining Procedure (M.P.E.P.), **Proof of Unavailability or Refusal**, states, in part:

> Where inability to find or reach a nonsigning inventor "after diligent effort" is the reason for filing under 37 CFR 1.47, a statement of facts should be submitted that fully describes the exact facts which are relied on to establish that a diligent effort was made.
>
> The fact that a nonsigning inventor is on vacation or out of town and is therefore temporarily unavailable to sign the declaration is not an acceptable reason for filing under 37 CFR 1.47.
>
> The statement of facts must be signed, where at all possible, by a person having firsthand knowledge of the facts recited therein. Statements based on hearsay will not normally be accepted. Copies of documentary evidence such as internet searches, certified mail return receipts, cover letters of instructions, telegrams, that support a finding that the nonsigning inventor could not be found or reached should be made part of the statement. The steps taken to locate the whereabouts of the nonsigning inventor should be included statement of facts. It is important that the statement contain facts as opposed to conclusions.

A review of the present petition reveals that applicants have not provided an acceptable showing that a diligent effort was made to reach the non-signing inventor(s), Julien Poncet and Patrice Charlat. The declaration of Christine Mattingly states that numerous attempts were made to reach the nonsigning inventor(s) but all attempts were unsuccessful. Additionally, petitioner has provided a copy of the cover letter mailed to the nonsigning inventor(s) on 15 September 2010. However, it is unclear as to the delivery status of the letter(s) mailed 15 September 2010. Was the letter(s) returned as undeliverable? Was the letter received by Julien Poncet and Patrice Charlat or by someone at the last known address? Furthermore, the mailing of the papers to the nonsigning inventor's last known address does not constitute a "diligent" effort to locate the inventor. Applicant must show that alternative means were employed, such as a search of telephone and/or Internet directories, in an attempt to locate Julien Poncet and Patrice Charlat. As stated above, copies of documentary evidence such as a certified mail return receipt, cover letter of instruction, telegrams, etc., should be supplied by a person having firsthand knowledge of the facts. Therefore, Item (2) has not been satisfied.

Regarding item (3) above, a clear statement of the last known address of the nonsigning inventor has been provided. Therefore, Item (3) has been satisfied.

As to item (4), section 409.03(a) of the Manual of Patent Examining Procedure ("MPEP") states that:

> An oath or declaration signed by all the available joint inventors with the signature block of the nonsigning inventor(s) left blank may be treated as having been signed by all the available joint inventors on behalf of the nonsigning inventor(s), unless otherwise indicated.

Here, applicants have filed declarations executed by one of the three inventors and including an unsigned signature box identifying the nonsigning inventor (Julien Poncet and Patrice Charlat). This declaration is treated as having been executed by the available inventors on their behalf and on behalf of the nonsigning inventor. Item (4) is therefore satisfied.

For the reasons stated above, it would not be appropriate to accept the application without the signature of Julien Poncet and Patrice Charlat under 37 CFR 1.47(a) at this time.

CONCLUSION

The petition under 37 CFR 1.47(a) is DISMISSED without prejudice.

If reconsideration on the merits of this petition is desired, a proper response must be filed within TWO (2) MONTH from the mail date of this decision. Any reconsideration request should include a cover letter entitled "Renewed Petition Under 37 CFR 1.47(a)." Extensions of time are available under 37 CFR 1.136(a). Failure to file a proper response will result in ABANDONMENT of the application.

Any further correspondence with respect to this matter may be filed electronically via EFS-Web selecting the document description "Petition for review and processing by the PCT Legal Office" or by mail addressed to Mail Stop PCT, Commissioner for Patents, Office of PCT Legal Administration, P.O. Box 1450, Alexandria, Virginia 22313-1450, with the contents of the letter marked to the attention of the Office of PCT Legal Administration.

Anthony Smith
Attorney-Advisor
Office of PCT Legal Administration
Telephone: 571-272-3298

UNITED STATES PATENT AND TRADEMARK OFFICE

Commissioner for Patents
United States Patent and Trademark Office
P.O. Box 1450
Alexandria, VA 22313-1450
www.uspto.gov

Carlson, Gaskey & Olds, P.C.
400 West Maple Road
Suite 350
Birmingham MI 48009

MAILED

MAR 14 2011

PCT LEGAL ADMINISTRATION

In re Application of :
PONCET et al. :
U.S. Application No.: 12/864,922 :
PCT No.: PCT/FR2009/050136 :
Int. Filing Date: 30 January 2009 :
Priority Date: 31 January 2008 :
Attorney Docket No.: PA0008081US;6703 . . . . :
For: PNEUMATIC DRILL DEVICE :

DECISION ON PETITION
UNDER 37 CFR 1.47(a)

In a decision mailed by this Office on 22 November 2010, applicants' petition under 37 CFR 1.47(a) was dismissed without prejudice for failing to satisfy all the requirements of a grantable petition. Specifically, petitioner had not submitted adequate evidence that the nonsigning inventor (Julien Poncet and Patrice Charlat) had received a copy of the complete application papers and refused to execute the application.

On 24 January 2011, petitioner filed the renewed petition considered herein. The 37 CFR 1.47(a) applicants provided evidence that a complete copy of the subject application was sent to the nonsigning inventor. The documents provided to Julien Poncet and Patrice Charlat included instructions to sign and return the declaration. These materials provide the required firsthand statement regarding the delivery to the nonsigning inventor (Julien Poncet and Patrice Charlat) of a copy of the complete application, and the nonsigning inventor's refusal to execute the application, with documentary evidence supporting the statement. The petition under 37 CFR 1.47(a) is **GRANTED**.

The application is accepted without the signature of nonsigning inventors, Julien Poncet and Patrice Charlat. A notice of the acceptance of the application will be published in the Official Gazette, and a letter informing the nonsigning inventor of the application will be forwarded to the inventor's last-known address, as set forth in the petition.

The application is being forwarded to the National Stage Processing Branch of the Office of PCT Operations for further processing.

Anthony Smith
Attorney-Advisor
Office of PCT Legal Administration
Telephone: 571-272-3298

UNITED STATES PATENT AND TRADEMARK OFFICE

Commissioner for Patents
United States Patent and Trademark Office
P.O. Box 1450
Alexandria, VA 22313-1450
www.uspto.gov

Julien Poncet
242 chemin des Livattes
F-42450 Sury Le Comtal
France

MAILED

MAR 14 2011

PCT LEGAL ADMINISTRATION

In re Application of
PONCET et al.
U.S. Application No.: 12/864,922
PCT No.: PCT/FR2009/050136
Int. Filing Date: 30 January 2009
Priority Date: 31 January 2008
Attorney Docket No.: PA0008081US;6703 . . . .
For: PNEUMATIC DRILL DEVICE

Dear Julien Poncet:

You are named as an inventor in the above identified United States patent application, filed under the provisions of 37 CFR 1.47(a) and 35 U.S.C. 116. Should a patent be granted, you will be designated as an inventor.

As a named inventor, you are entitled to inspect any paper in the file wrapper of the application, order copies of all or any part thereof (at a prepaid cost per 37 CFR 1.19) or to make your position of record in the application. Alternatively, you may arrange to do any of the preceding through a registered patent agent or attorney presenting written authorization from you. If you care to join in the application, counsel of record (see below) would presumably assist you. Joining in the application would entail the filing of an appropriate oath or declaration by you pursuant to 37 CFR 1.63.

Anthony Smith
Attorney-Advisor
Office of PCT Legal Administration
Telephone: (571) 272-3298
Facsimile: (571) 273-0459

Counsel of Record:
Carlson, Gaskey & Olds, P.C.
400 West Maple Road
Suite 350
Birmingham MI 48009

UNITED STATES PATENT AND TRADEMARK OFFICE

Commissioner for Patents
United States Patent and Trademark Office
P.O. Box 1450
Alexandria, VA 22313-1450
www.uspto.gov

Patrice Charlat
F-42111 Saiier sur Rochefort
France

MAILED
MAR 14 2011
PCT LEGAL ADMINISTRATION

In re Application of
PONCET et al.
U.S. Application No.: 12/864,922
PCT No.: PCT/FR2009/050136
Int. Filing Date: 30 January 2009
Priority Date: 31 January 2008
Attorney Docket No.: PA0008081US;6703 . . . .
For: PNEUMATIC DRILL DEVICE

Dear Patrice Charlat:

You are named as an inventor in the above identified United States patent application, filed under the provisions of 37 CFR 1.47(a) and 35 U.S.C. 116. Should a patent be granted, you will be designated as an inventor.

As a named inventor, you are entitled to inspect any paper in the file wrapper of the application, order copies of all or any part thereof (at a prepaid cost per 37 CFR 1.19) or to make your position of record in the application. Alternatively, you may arrange to do any of the preceding through a registered patent agent or attorney presenting written authorization from you. If you care to join in the application, counsel of record (see below) would presumably assist you. Joining in the application would entail the filing of an appropriate oath or declaration by you pursuant to 37 CFR 1.63.

Anthony Smith
Attorney-Advisor
Office of PCT Legal Administration
Telephone: (571) 272-3298
Facsimile: (571) 273-0459

Counsel of Record:
Carlson, Gaskey & Olds, P.C.
400 West Maple Road
Suite 350
Birmingham MI 48009

3 1 AUG 2010

UNITED STATES PATENT AND TRADEMARK OFFICE

Commissioner for Patents
United States Patent and Trademark Office
P.O. Box 1450
Alexandria, VA 22313-1450
www.uspto.gov

YOUNG & THOMPSON
209 Madison Street
Suite 500
Alexandria VA 22314

In re Application of	:	
PAYNE	:	
Application No.: 12/864,939	:	DECISION ON
PCT No.: PCT/ZA2008/000125	:	
Int. Filing Date: 19 December 2008	:	PETITION UNDER
Priority Date: 21 December 2007	:	
Attorney Docket No.: 6501-1094	:	37 CFR 1.137(b)
For: ROOF RACK SYSTEM	:	

This decision is in response to applicants' submission filed 28 July 2010.

BACKGROUND

On 19 December 2008, applicant filed international application PCT/ZA2008/000125 which designated the U.S. and claimed a priority date of 21 December 2007. A copy of the international application was communicated to the United States Patent and Trademark Office (USPTO) from the International Bureau on 02 July 2009. The thirty-month period for paying the basic national fee in the United States expired at midnight on 21 June 2010.

On 28 July 2010, applicant filed a transmittal letter for entry into the national stage in the United States, which was accompanied by, *inter alia*, the U.S. basic national fee, a declaration of the inventor, and a petition under 37 CFR 1.137(b).

DISCUSSION

A petition to revive the present application under 37 CFR 1.137(b) must include:

(1) The required reply;
(2) The petition fee;
(3) A statement that the entire delay in filing the required reply from the due date for the reply until the filing of a grantable petition was unintentional.

As to item (1), applicant submitted the basic national fee on 28 July 2010.

As to item (2), applicant submitted the petition fee on 28 July 2010.

As to item (3), the required statement has been provided.

A review of the application file reveals that, with the filing of the present petition and accompanying papers, a proper response has been submitted and all of the requirements of 37 CFR 1.137(b) for revival have been satisfied and revival is therefore appropriate.

The declaration of the inventor filed 28 July 2010 is in compliance with 37 CFR 1.497(a)-(b).

CONCLUSION

The petition under 37 CFR 1.137(b) is **GRANTED** for the reasons set forth above.

This application is being forwarded to the National Stage Processing Branch of the Office of PCT Operations to continue national stage processing of the application.

/Daniel Stemmer/

Daniel Stemmer
Legal Examiner
PCT Legal Affairs
Office of Patent Cooperation Treaty
Legal Administration
Telephone: (571) 272-3301

UNITED STATES PATENT AND TRADEMARK OFFICE

Commissioner for Patents
United States Patent and Trademark Office
Washington, D.C. 20231
www.uspto.gov

MAILED

MAY 19 2011

PCT LEGAL ADMINISTRATION

LADAS & PARRY LLP
224 SOUTH MICHIGAN AVENUE
SUITE 1600
CHICAGO IL 60604

In re Application of	:	
ALGORA, et al.	:	DECISION ON PETITION
Serial No.: 12/864,957	:	
PCT No.: PCT/CA2009/000069	:	UNDER 37 CFR 1.47(a)
Int. Filing Date: 28 January 2009	:	
Priority Date: 29 January 2008	:	
Atty Docket No.: CU-8509 BWH	:	
For: WATER DISPENSER WITH A RESERVOIR SYSTEM AND FAUCET MANIFOLD THEREFOR	:	

This decision is in response to applicant's petition under 37 CFR 1.47(a) filed 21 April 2011 in the United States Patent and Trademark Office (USPTO) to accept the application without the signatures of inventors Shusheng Liu and Bohong Zeng.

BACKGROUND

On 28 January 2009, applicant filed international application PCT/CA2009/000069 which claimed priority to a previous application filed 29 January 2008. Pursuant to 37 CFR 1.495, the thirty-month period for paying the basic national fee in the United States was set to expire at midnight on 29 July 2010.

On 28 July 2010, applicant filed a transmittal letter for entry into the national stage in the United States, which was accompanied by the requisite basic national fee as required by 35 U.S.C. 371(c)(1) and an Application Data Sheet.

On 21 September 2010, applicant was mailed a NOTIFICATION OF MISSING REQUIREMENTS UNDER 35 U.S.C. 371 (Form PCT/DO/EO/905) informing applicant of the need to provide an executed oath or declaration of the inventors, in compliance with 37 CFR 1.497(a) and (b), identifying the application by the international application number and international filing date. Applicant was given two months to respond and advised that this time period could be extended with a proper petition and payment of fees.

On 21 April 2011, applicant filed the present petition under 37 CFR 1.47(a) accompanied by a petition for a five-month extension of time and payment of the appropriate extension of time fee.

DISCUSSION

A petition under 37 CFR 1.47(a) must be accompanied by (1) the fee under 37 CFR 1.17(g), (2) factual proof that the missing joint investor refuses to execute the application or cannot be reached after diligent effort, (3) a statement of the last known address of the missing inventor, and (4) an oath or declaration by each 37 CFR 1.47(a) applicant on his or her own behalf and on behalf of the non-signing joint inventor.

Applicant has satisfied items 1, 3 and 4.

As to item (2), the statement of Mr. Athanasios Vouloumanos indicates that the mailings to the non-signing inventors was returned as the inventor had moved. It does not appear that after the mailings were returned attempts were made to locate current addresses for the non-signing inventors. As stated in the Manual of Patent Examination Procedure (MPEP), Section 409.03(d) Proof of Unavailability or Refusal, "Copies of documentary evidence such as internet searches, certified mail return receipts, cover letters of instructions, telegrams, that support a finding that the nonsigning inventor could not be found or reached should be made part of the statement. The steps taken to locate the whereabouts of the nonsigning inventor should be included in the statement of facts." These materials have not been supplied in the present petition.

However, the MPEP also provides that:

> Where a refusal of the inventor to sign the application papers is alleged, the circumstances of the presentation of the application papers and of the refusal must be specified in a statement of facts by the person who presented the inventor with the application papers and/or to whom the refusal was made. Statements by a party not present when an oral refusal is made will not be accepted.
>
> Proof that a bona fide attempt was made to present a copy of the application papers (specification, including claims, drawings, and oath or declaration) to the nonsigning inventor for signature, but the inventor refused to accept delivery of the papers or expressly stated that the application papers should not be sent, may be sufficient. When there is an express oral refusal, that fact along with the time and place of the refusal must be stated in the statement of facts.

The statement of Mr. Vouloumanos states that the inventors in question indicated to a Mr. David Wong that they would not cooperate with Mr. Wong or GKE in advancing the application. A firsthand statement from Mr. Wong confirming theses conversations would satisfy this item.

As such, it is not possible to grant applicant's petition at this time.

CONCLUSION

For the reasons stated above, applicant's petition under 37 CFR 1.47(a) is **DISMISSED**.

Any reconsideration on the merits of this petition must be filed within **TWO (2) MONTHS** from the mail date of this decision. Any reconsideration request should include a cover letter entitled "Renewed Petition Under 37 CFR 1.47(a)." No additional petition fee is required. Extensions of time may be obtained under 37 CFR 1.136(a).

Any further correspondence with respect to this matter should be directed to Mail Stop PCT, Commissioner for Patents, Office of PCT Legal Administration, P.O. Box 1450, Alexandria, Virginia 22313-1450, with the contents of the letter marked to the attention of the Office of PCT Legal Administration or electronically filed utilizing the USPTO's EFS-Web electronic filing system..

Derek A. Putonen
Attorney Advisor
Office of PCT Legal Administration
Tel: 571-272-3294

UNITED STATES PATENT AND TRADEMARK OFFICE

Commissioner for Patents
United States Patent and Trademark Office
Washington, D.C. 20231
www.uspto.gov

MAILED

AUG 22 2011

PCT LEGAL ADMINISTRATION

LADAS & PARRY LLP
224 SOUTH MICHIGAN AVENUE
SUITE 1600
CHICAGO IL 60604

In re Application of	:	
ALGORA, et al.	:	DECISION ON PETITION
Serial No.: 12/864,957	:	
PCT No.: PCT/CA2009/000069	:	UNDER 37 CFR 1.47(a)
Int. Filing Date: 28 January 2009	:	
Priority Date: 29 January 2008	:	
Atty Docket No.: CU-8509 BWH	:	
For: WATER DISPENSER WITH A RESERVOIR	:	
SYSTEM AND FAUCET MANIFOLD	:	
THEREFOR	:	

This decision is in response to the renewed petition under 37 CFR 1.47(a) filed 18 July 2011.

BACKGROUND

On 19 May 2011, applicant was mailed a decision dismissing applicant's petition under 37 CFR 1.47. Applicant was afforded two months to file any request for reconsideration.

On 18 July 2011, applicant filed the renewed petition under 37 CFR 1.47(a) considered herein.

DISCUSSION

As detailed in the decision mailed 19 May 2011, a petition under 37 CFR 1.47(a) must be accompanied by (1) the fee under 37 CFR 1.17(g), (2) factual proof that the missing joint investor refuses to execute the application or cannot be reached after diligent effort, (3) a statement of the last known address of the missing inventor, and (4) an oath or declaration by each 37 CFR 1.47(a) applicant on his or her own behalf and on behalf of the non-signing joint inventor. Applicant previously satisfied items 1, 3 and 4.

With the filing of the renewed petition and supporting statement from Mr. David Wong that the inventors refused to have the application papers presented to them or execute an oath or declaration applicant has satisfied the remaining item and it is therefore proper to grant applicant's renewed petition at this time.

CONCLUSION

For the reasons stated above, applicant's renewed petition under 37 CFR 1.47(a) is **GRANTED**.

The application has an international filing date of 28 January 2009 under 35 U.S.C. 363, and will be given a date of **21 April 2011** under 35 U.S.C. 371 (c)(1), (c)(2) and (c)(4).

As provided in 37 CFR 1.47(c), a notice of the filing of this application will be forwarded to the non-signing inventor at his last known address of record. A notice of the filing of the application under 37 CFR 1.47(a) will be published in the Official Gazette.

This application is being returned to the DO/EO/US for processing in accordance with this decision.

Derek A. Putonen
Attorney Advisor
Office of PCT Legal Administration
Tel: 571-272-3294

UNITED STATES PATENT AND TRADEMARK OFFICE

Commissioner for Patents
United States Patent and Trademark Office
P.O. Box 1450
Alexandria, VA 22313-1450
www.uspto.gov

MAILED

AUG 22 2011

PCT LEGAL ADMINISTRATION

Mr. Shusheng Liu
No. 20, Lane 4
Yan Tian Xin yi Village
Xi xiang Town, Bao Shenzhen
People's Republic of China

In re Application of
ALGORA, et al.
Serial No.: 12/864,957
PCT No.: PCT/CA2009/000069
Int. Filing Date: 28 January 2009
Priority Date: 29 January 2008
Atty Docket No.: CU-8509 BWH
For: WATER DISPENSER WITH RESERVOIR SYSTEM AND FAUCET MANIFOLD THEREFOR

Dear Mr. Liu:

You are named as an inventor in the above identified United States patent application, filed under the provisions of 37 CFR 1.47(a) and 35 U.S.C. 116. Should a patent be granted, you will be designated as an inventor. As a named inventor, you are entitled to inspect any paper in the file wrapper of the application, order copies of all or any part thereof (at a prepaid cost per 37 CFR 1.19) or to make your position of record in the application. Alternately, you may arrange to do any of the preceding through a registered patent agent or attorney presenting written authorization from you. If you care to join in the application, the law firm of record (see below) would presumably assist you. Joining in the application would entail the filing of the appropriate oath or declaration by you pursuant to 37 CFR 1.63.

Derek A. Putonen
Attorney Advisor
Office of PCT Legal Administration
Tel: (571) 272-3294

Counsel of Record:
LADAS & PARRY LLP
224 SOUTH MICHIGAN AVENUE
SUITE 1600
CHICAGO IL 60604
UNITED STATES OF AMERICA

UNITED STATES PATENT AND TRADEMARK OFFICE

Commissioner for Patents
United States Patent and Trademark Office
P.O. Box 1450
Alexandria, VA 22313-1450
www.uspto.gov

MAILED

AUG 22 2011

PCT LEGAL ADMINISTRATION

Mr. Bohong Zeng
HuaQiang North Street
SaiGe Square 19th Floor
Shenzhen
People's Republic of China

In re Application of
ALGORA, et al.
Serial No.: 12/864,957
PCT No.: PCT/CA2009/000069
Int. Filing Date: 28 January 2009
Priority Date: 29 January 2008
Atty Docket No.: CU-8509 BWH
For: WATER DISPENSER WITH RESERVOIR SYSTEM AND FAUCET MANIFOLD THEREFOR

Dear Mr. Zeng:

You are named as an inventor in the above identified United States patent application, filed under the provisions of 37 CFR 1.47(a) and 35 U.S.C. 116. Should a patent be granted, you will be designated as an inventor. As a named inventor, you are entitled to inspect any paper in the file wrapper of the application, order copies of all or any part thereof (at a prepaid cost per 37 CFR 1.19) or to make your position of record in the application. Alternately, you may arrange to do any of the preceding through a registered patent agent or attorney presenting written authorization from you. If you care to join in the application, the law firm of record (see below) would presumably assist you. Joining in the application would entail the filing of the appropriate oath or declaration by you pursuant to 37 CFR 1.63.

Derek A. Putonen
Attorney Advisor
Office of PCT Legal Administration
Tel: (571) 272-3294

Counsel of Record:
LADAS & PARRY LLP
224 SOUTH MICHIGAN AVENUE
SUITE 1600
CHICAGO IL 60604
UNITED STATES OF AMERICA

UNITED STATES PATENT AND TRADEMARK OFFICE

Commissioner for Patents
United States Patent and Trademark Office
P.O. Box 1450
Alexandria, VA 22313-1450
www.uspto.gov

WOLF GREENFIELD & SACKS, P.C.
600 ATLANTIC AVENUE
BOSTON, MA 02210-2206

MAILED

DEC 01 2011

OFFICE OF PETITIONS

In re Application of Jonniaux et al. :
Application No. 12/864,969 :
Int'l Filing Date: January 29, 2009 :
Attorney Docket No. A0848.70066US01 :
Pub. No. US 2011/0183861 A1 :
Pub. Date: July 28, 2011 :

Decision on Request

This is a decision on the request for a corrected patent application publication under 37 C.F.R. § 1.221(b) filed September 13, 2011.

The request is **dismissed**.

Applicants request the application be republished because of the mistake in the patent application publication identified in the request.

37 C.F.R. § 1.221(b) states,

> [Relief under 37 C.F.R. § 1.221 is warranted] only when the Office makes a material mistake which is apparent from Office records.... Any request for corrected publication or revised patent application publication other than provided in paragraph (a) of this section must be filed within two months from the date of the patent application publication. This period is not extendable.

A mistake is only a "material" mistake if the mistake affects the public's ability to appreciate the technical disclosure of the patent application publication, determine the scope of the patent application publication, or determine the scope of the provisional rights that an applicant may seek to enforce upon issuance of a patent.[1]

The mistake identified in the instant request is not a material mistake as required under 37 C.F.R. § 1.221(b). Specifically, the mistake does not affect the public's ability to appreciate the technical disclosure of the patent application publication, determine the scope of the patent

[1] *See* Changes to Implement Eighteen-Month Publication of Patent Applications; Final Rule, 65 Fed. Reg. 57023, 57038 (Sept. 20, 2000), 1239 Off. Gaz. Pat. Office 63, 75 (Oct. 10, 2000). *See also* Section 1130 of the Manual of Patent Examining Procedure (8th ed., Rev. 8, July 2010).

application publication, or determine the scope of the provisional rights that an applicant may seek to enforce upon issuance of a patent. *See* MPEP § 1121 ("Errors in assignee information printed on the publication are not considered material mistakes by the Office."). Therefore, relief under 37 C.F.R. § 1.221(b) is unwarranted and the request is dismissed.

Applicants are advised that a "request for republication of an application previously published" may be filed under 37 C.F.R. § 1.221(a). The request must include a copy of the application, which complies with the Office's electronic filing system requirements set forth in 37 C.F.R. § 1.18(d), and the required processing fee set forth in 37 C.F.R. § 1.17(i).

If the request for republication does not comply with the electronic filing system requirements, the republication will not take place and the publication fee set forth in 37 C.F.R. § 1.18(d) will be refunded. However, the processing fee will be retained.

Guidance for filing a request for a Pre-Grant Publication, such as a request for republication, may be found at the links below:

http://www.uspto.gov/patents/process/file/efs/guidance/index.jsp

http://www.uspto.gov/ebc/portal/efs/pgpub_quickstart.pdf

Any request for republication under 37 C.F.R. § 1.221(a), must be submitted via the EFS system as a "Pre-Grant Publication" and questions or any request for reconsideration of the instant decision should be addressed as follows:

By mail to: Mail Stop PGPUB
Commissioner for Patents
P.O. Box 1450
Alexandria, Va. 22313-1450

Telephone inquiries regarding this communication should be directed to Senior Petitions Attorney Steven Brantley at (571) 272-3203.

Christopher Bottorff
Petitions Examiner
Office of Petitions

UNITED STATES PATENT AND TRADEMARK OFFICE

Commissioner for Patents
United States Patent and Trademark Office
P.O. Box 1450
Alexandria, VA 22313-1450

OBLON, SPIVAK, MCCLELLAND MAIER & NEUSTADT, L.L.P.
1940 DUKE STREET
ALEXANDRIA, VA 22314

MAILED
SEP 23 2011
OFFICE OF PETITIONS

Applicant: Gropp, et al.
Appl. No.: 12/864,985
International Filing Date: January 13, 2009
Title: METHOD FOR PRODUCING METHACRYLIC ACID
Attorney Docket No.: 36415US0PCT
Pub. No.: US 2010/0331572 A1
Pub. Date: December 30, 2010

This is a decision on the request for a corrected patent application publication under 37 CFR 1.221(b), received on January 26, 2011, for the above-identified application.

The request is granted.

The corrected patent application publication will be published in due course, unless the patent issues before the application is republished.

Inquiries relating to this matter may be directed to Mark Polutta at (571) 272-7709.

M. Polutta

Mark Polutta
Senior Legal Advisor
Office of Patent Legal Administration
Office of the Deputy Commissioner
for Patent Examination Policy

UNITED STATES PATENT AND TRADEMARK OFFICE

16 AUG 2010

Commissioner for Patents
United States Patent and Trademark Office
P.O. Box 1450
Alexandria, VA 22313-1450
www.uspto.gov

DOWELL & DOWELL P.C.
103 Oronoco St.
Suite 220
Alexandria VA 22314

In re Application of:	:	
LAZAR, Zsombor, et al.	:	
U.S. Application No.: 12/865,004	:	DECISION ON PETITION
PCT No.: PCT/HU2008/000057	:	
International Filing Date: 22 May 2008	:	
Priority Date: 05 June 2007	:	
Attorney Docket No.: 17174NP	:	
For: METHOD OF DETERMINING AN INTRUSION INTO A MONTIORED AREA AND A SYSTEM THEREFORE	:	

The petition for revival under 37 CFR 1.137(b) filed 28 July 2010 in the above-captioned application is hereby **GRANTED** as follows:

International application PCT/HU2008/000057 became abandoned with respect to the United States at midnight on 05 December 2009 based on applicants' failure to request entry into national stage in the United States and pay the basic national fee prior to the expiration of thirty months from the priority date.

The present petition for revival was accompanied by payment of the petition fee and the "required reply" in the form of a request for entry into the U.S. national stage and payment of the small entity basic national fee. In addition, the petition includes a statement executed by each of the three applicant/inventors stating that "the entire delay in filing the required reply from the due date for the required reply until the filing of a grantable petition under 37 CFR 1.137(b) was unintentional," satisfying the requirement of 37 CFR 1.137(b)(3).

Based on the above, the requirements of 37 CFR 1.137(b) have been satisfied. Accordingly, the request to revive the international application with respect to the United States is appropriately granted.

This application is being referred to the National Stage Processing Division of the Office of PCT Operations for further processing in accordance with this decision.

It is noted that the present petition was accompanied by two executed declarations (Form PTO/SB/01A). However, the declarations are not acceptable as filed, in that neither of the two one-page declarations properly identify and are executed by all three of the inventors of record. In addition, the declaration executed by inventor Peter TARJAN includes an unacceptable hand-

written alteration that was not initialed or dated. Accordingly, applicants have not yet submitted an oath or declaration in compliance with 37 CFR 1.497.

Richard M. Ross
Attorney Advisor
Office of PCT Legal Administration
Telephone: (571) 272-3296
Facsimile: (571) 273-0459

UNITED STATES PATENT AND TRADEMARK OFFICE

Commissioner for Patents
United States Patent and Trademark Office
P.O. Box 1450
Alexandria, VA 22313-1450
www.uspto.gov

25570
ROBERTS MLOTKOWSKI SAFRAN & COLE, P.C.
Intellectual Property Dept.
P.O. Box 10064
McLean, VA 22102-8064

MAILED
JUN 02 2011
PCT LEGAL ADMINISTRATION

In re Application of
ROBERTS *et al*
U.S. Application No.: 12/865,005
PCT No.: PCT/GB2009/000230
Int. Filing Date: 28 January 2009
Priority Date: 28 January 2008
Docket No.: 14459.18U
For: STRUCTURAL LOAD MONITORING USING COLLARS AND CONNECTING ELEMENTS WITH STRAIN SENSORS

DECISION ON PETITION UNDER 37 CFR 1.137(b)

Applicants' petition to revive under 37 CFR 1.137(b) filed on 08 April 2011 is hereby **GRANTED** as follows:

Applicants submitted a declaration in compliance with 37 CFR 1.497(a) and (b) and a $130.00 surcharge fee. This is an appropriate reply to the Form PCT/DO/EO/905 mailed 02 September 2010. The petition fee has been paid. Applicants made the required statement pursuant to 37 CFR 1.137(b)(3). A terminal disclaimer is not required. Accordingly, all requirements under 37 CFR 1.137(b) have been satisfied.

This application is being forwarded to the United States Designated/Elected Office for further processing.

James Thomson
Attorney Advisor
Office of PCT Legal Administration

Tel.: (571) 272-3302

2 7 SEP 2010

UNITED STATES PATENT AND TRADEMARK OFFICE

Commissioner for Patents
United States Patent and Trademark Office
P.O. Box 1450
Alexandria, VA 22313-1450
www.uspto.gov

SHELL OIL COMPANY
P O BOX 2463
HOUSTON TX 77252-2463

In re Application of	:	
MATUSZ, Marek, et al.	:	
Application No.: 12/865,010	:	
PCT No.: PCT/US2008/063722	:	
Int. Filing Date: 15 May 2008	:	DECISION
Priority Date: 18 May 2007	:	
Att. Docket No.: TH3308(US)	:	
For: A REACTOR SYSTEM, AN	:	
ABSORBENT AND A PROCESS	:	
FOR REACTING A FEED	:	

Applicant's petition under 37 CFR 1.137(b), filed in the United States Patent and Trademark Office on 28 July 2010, is **GRANTED**.

Applicant states that the entire delay in filing the required reply from the due date for the required reply until the filing of a grantable petition under 37 CFR 1.137(b) was unintentional, as required by 37 CFR 1.137(b)(3). The appropriate national fee and petition fee have been submitted. A terminal disclaimer is not required as the application was filed on or after 08 June 1995. Accordingly, all requirements under 37 CFR 1.137(b) have been satisfied.

The fee for filing the search fee, examination fee or oath or declaration after 30 months will be charged to deposit account no. 19-1800, as authorized.

This application is being referred to the National Stage Processing Branch of the Office of Patent Application Processing for continued processing in accordance with this decision.

/Erin P. Thomson/

Erin P. Thomson
Attorney Advisor
PCT Legal Administration

Telephone: 571-272-3292

28 SEP 2010

UNITED STATES PATENT and TRADEMARK OFFICE

COMMISSIONER FOR PATENTS
UNITED STATES PATENT AND TRADEMARK OFFICE
P.O BOX 1450
ALEXANDRIA, VA 22313-1450
www.uspto.gov

SHELL OIL COMPANY
P O BOX 2463
HOUSTON TX 77252-2463

In re Application of	DECISION ON
Marek MATUSZ	
Application No.: 12/865,021	
PCT No.: PCT/US2008/62876	
Int. Filing Date: 07 May 2008	PETITION UNDER
Priority Date: 09 May 2007	
Attorney's Docket No.: TH2905(US)	
For: AN EPOXIDATION... AN ALKANOLAMINE	37 CFR 1.137(b)

This decision is in response to applicant's "Petition For Revival Of An International Application for Patent Designating the U.S. Abandoned Unintentionally Under 37 CFR 1.137(b)," filed on 28 July 2010.

BACKGROUND

On 07 May 2008, this international application was filed, claiming an earliest priority date of 09 May 2007.

The deadline for paying the basic national fee in the United States under 35 U.S.C. 371 and 37 CFR 1.495 was 09 November 2009. This international application became abandoned with respect to the United States at midnight on 09 November 2009 for failure to pay the required basic national fee.

On 28 July 2010, applicant filed in the United States Patent and Trademark Office (PTO) a transmittal letter for entry into the national stage in the U.S. under 35 U.S.C. 371, which was accompanied by, *inter alia*, the national basic fee, petition fee, and a petition under 37 CFR 1.137(b).

DISCUSSION

A grantable petition to revive an abandoned application under 37 CFR 1.137(b) must be accompanied by (1) the required reply, unless previously filed. In a nonprovisional application abandoned for failure to prosecute, the required reply may be met by the filing of a continuing application; (2) the petition fee as set forth in § 1.17(m); and (3) a statement that the entire delay in filing the required reply from the due date for the reply until the filing of a grantable petition pursuant to this paragraph was unintentional. The Commissioner may require additional information where there is a question whether the delay was unintentional; and (4) any terminal disclaimer (and fee as set forth in § 1.20 (d)) required pursuant to paragraph (c) of this section.

Petitioner has provided: (1) the proper reply by submitting the basic national filing fee, (2) the petition fee set forth in §1.17(m) and (3) the proper statement under 137(b)(3). In this application, no terminal disclaimer is required.

Accordingly, the petition is deemed to satisfy requirements (1), (2), (3), and (4) under 37 CFR 1.137(b).

DECISION

The petition under 37 CFR 1.137(b) is **GRANTED**.

This application is being returned to the United States Designated/Elected Office (DO/EO/US) for continued processing.

Rafael Bacares
PCT Legal Examiner
PCT Legal Office
Telephone: (571) 272-3276
Facsimile: (571) 272-0459

UNITED STATES PATENT AND TRADEMARK OFFICE

Commissioner for Patents
United States Patent and Trademark Office
P.O. Box 1450
Alexandria, VA 22313-1450
www.uspto.gov

Decision Date : April 11, 2012

In re Application of :

Mary Ann Nadler

Application No : 12865027

Filed : 28-Jul-2010

Attorney Docket No : WFG-4753-21

DECISION ON REQUEST TO WITHDRAW AS ATTORNEY/AGENTOF RECORD

This is an electronic decision on the Request to Withdraw as attorney or agent of record under 37 CFR § 1.36(b), filed April 11, 2012

The request is **APPROVED.**

The request was signed by Willem F. Gadiano (registration no. 37136) on behalf of all attorneys/agents associated with Customer Number 23117 . All attorneys/agents associated with Cusotmer Number 23117 have been withdrawn.

Since there are no remaining attorneys of record, all future communications from the Office will be directed to the first named inventor or assignee that has properly made itself of record pursuant to 37 CFR 3.71, with correspondence address:

Name	DiaKine Therapeutics, Inc.
Name2	
Address 1	J.A. Lindeman & Co. PLLC,
Address 2	3190 Fairview Park Drive, Suite 480
City	Falls Church
State	VA
Postal Code	22042
Country	US

As a reminder, requester is required to inform the first named inventor or assignee that has properly made itself of record pursuant to 37 CFR 3.71 of the electronically processed petition.

Telephone inquiries concerning this decision should be directed to the Patent Electronic Business Center (EBC) at 866-217-9197.

Office of Petitions

Doc Code: PET.AUTO **Document Description: Petition automatically granted by EFS-Web**	PTO/SB/83 U.S. Patent and Trademark Office Department of Commerce

Electronic Petition Request	**REQUEST FOR WITHDRAWAL AS ATTORNEY OR AGENT AND CHANGE OF CORRESPONDENCE ADDRESS**
Application Number	12865027
Filing Date	28-Jul-2010
First Named Inventor	Mary Ann Nadler
Art Unit	1654
Examiner Name	AMBER STEELE
Attorney Docket Number	WFG-4753-21
Title	COMPOSITIONS AND METHODS FOR TREATING DIABETES USING LISOFYLLINE AND ISLET NEOGENESIS ASSOCIATED PEPTIDE

◉ Please withdraw me as attorney or agent for the above identified patent application and the practitioners of record associated with Customer Number: 23117

The reason(s) for this request are those described in 37 CFR:

10.40(c)(4)

Certifications

☒ I/We have given reasonable notice to the client, prior to the expiration of the response period, that the practitioner(s) intend to withdraw from employment

☒ I/We have delivered to the client or a duly authorized representative of the client all papers and property (including funds) to which the client is entitled

☒ I/We have notified the client of any responses that may be due and the time frame within which the client must respond

Change the correspondence address and direct all future correspondence to the first named inventor or assignee that has properly made itself of record pursuant to 37 CFR 3.71:

Name	DiaKine Therapeutics, Inc.
Address	J.A. Lindeman & Co. PLLC, 3190 Fairview Park Drive, Suite 480
City	Falls Church
State	VA
Postal Code	22042
Country	US

I am authorized to sign on behalf of myself and all withdrawing practitioners.	
Signature	/Willem F. Gadiano/
Name	Willem F. Gadiano
Registration Number	37136

UNITED STATES PATENT and TRADEMARK OFFICE

COMMISSIONER FOR PATENTS
UNITED STATES PATENT AND TRADEMARK OFFICE
P.O BOX 1450
ALEXANDRIA, VA 22313-1450
www.uspto.gov

OBLON, SPIVAK, MCCLELLAND MAIER & NEUSTADT, L.L.P.
1940 DUKE STREET
ALEXANDRIA VA 22314

MAILED

FEB 08 2011

PCT LEGAL ADMINISTRATION

In re Application of :
FACCHETTI et al :
Application No.: 12/865,031 :
PCT No.: PCT/EP2009/51315 : DECISION
Int. Filing Date: 05 February 2009 :
Priority Date: 05 February 2008 :
Attorney Docket No.: 364091USOXPCT :
For: SEMICONDUCTOR MATERIALS... :
COPOLYMERS

This is in response to applicants' submission "PETITION UNDER 37 CFR 1.182 TO CORRECT NAME OF INVENTOR" filed on 08 December 2010. This submission states that the correct name of the 10th joint inventor is Silke Annika KOEHLER. The petition fee of $400.00 has been provided by credit card.

BACKGROUND

In a notification from this Office on 22 October 2010 indicated that the 10th joint inventor's name had to be corrected under 37 CFR 1.182 or showing that it was corrected under PCT rule 92bis.

On 08 December 2010, this petition was filed and states that the correct name of the 10th joint inventor is **Silke Annika KOEHLER** and the petition fee has been paid.

DISCUSSION

The correct name of the 10th joint inventor is "**Silke Annika KOEHLER**" as explained in the petition and this name will be reflected in the US national stage processing. This is the name that has been used in the executed Declaration.

For the reasons above, the application may enter into national stage processing at this time.

CONCLUSION

The petition under 37 CFR 1.182 is **GRANTED.**

This application is being returned to the United States Designated/Elected Office (DO/EO/US) for continued processing.

Rafael Bacares
PCT Legal Examiner
PCT Legal Office
Telephone: (571) 272-6376
Facsimile: (571) 273-0459

UNITED STATES PATENT AND TRADEMARK OFFICE

Commissioner for Patents
United States Patent and Trademark Office
P.O. Box 1450
Alexandria, VA 22313-1450
www.uspto.gov

Decision Date : August 9,2011

In re Application of :

Masato Ofuji

DECISION ON PETITION

UNDER CFR 1.313(c)(2)

Application No : 12865032

Filed : 28-Jul-2010

Attorney Docket No : 03500.155095.

This is an electronic decision on the petition under 37 CFR 1.313(c)(2), filed August 9,2011 , to withdraw the above-identified application from issue after payment of the issue fee.

The petition is **GRANTED.**

The above-identified application is withdrawn from issue for consideration of a submission under 37 CFR 1.114 (request for continued examination). See 37 CFR 1.313(c)(2).

Petitioner is advised that the issue fee paid in this application cannot be refunded. If, however, this application is again allowed, petitioner may request that it be applied towards the issue fee required by the new Notice of Allowance.

Telephone inquiries concerning this decision should be directed to the Patent Electronic Business Center (EBC) at 866-217-9197.

This application file is being referred to Technology Center AU 2818 for processing of the request for continuing examination under 37 CFR 1.114 .

Office of Petitions

Doc Code: PET.AUTO Document Description: Petition automatically granted by EFS-Web	PTO/SB/140 U.S. Patent and Trademark Office Department of Commerce

Electronic Petition Request	**PETITION TO WITHDRAW AN APPLICATION FROM ISSUE AFTER PAYMENT OF THE ISSUE FEE UNDER 37 CFR 1.313(c)**
Application Number	12865032
Filing Date	28-Jul-2010
First Named Inventor	Masato Ofuji
Art Unit	2818
Examiner Name	DUNG LE
Attorney Docket Number	03500.155095.
Title	METHOD OF TREATING SEMICONDUCTOR ELEMENT

An application may be withdrawn from issue for further action upon petition by the applicant. To request that the Office withdraw an application from issue, applicant must file a petition under this section including the fee set forth in § 1.17(h) and a showing of good and sufficient reasons why withdrawal of the application from issue is necessary.

APPLICANT HEREBY PETITIONS TO WITHDRAW THIS APPLICATION FROM ISSUE UNDER 37 CFR 1.313(c).

A grantable petition requires the following items:
(1) Petition fee; and
(2) One of the following reasons:
(a) Unpatentability of one or more claims, which must be accompanied by an unequivocal statement that one or more claims are unpatentable, an amendment to such claim or claims, and an explanation as to how the amendment causes such claim or claims to be patentable;
(b) Consideration of a request for continued examination in compliance with § 1.114 (for a utility or plant application only); or
(c) Express abandonment of the application. Such express abandonment may be in favor of a continuing application, but not a CPA under 37 CFR 1.53(d).

Petition Fee

- ☐ Applicant claims SMALL ENTITY status. See 37 CFR 1.27.
- ☐ Applicant is no longer claiming SMALL ENTITY status. See 37 CFR 1.27(g)(2).
- ☐ Applicant(s) status remains as SMALL ENTITY.
- ☒ Applicant(s) status remains as other than SMALL ENTITY

Reason for withdrawal from issue

○ One or more claims are unpatentable

◉ Consideration of a request for continued examination (RCE) (List of Required Documents and Fees)

○ Applicant hereby expressly abandons the instant application (any attorney/agent signing for this reason must have power of attorney pursuant to 37 CFR 1.32(b)).

RCE request,submission, and fee.

☐ I certify, in accordance with 37 CFR 1.4(d)(4) that : The RCE request ,submission, and fee have already been filed in the above-identified application on

☒ Are attached.

THIS PORTION MUST BE COMPLETED BY THE SIGNATORY OR SIGNATORIES

I certify, in accordance with 37 CFR 1.4(d)(4) that I am:

◉ An attorney or agent registered to practice before the Patent and Trademark Office who has been given power of attorney in this application.

○ An attorney or agent registered to practice before the Patent and Trademark Office, acting in a representative capacity.

○ A sole inventor

○ A joint inventor; I certify that I am authorized to sign this submission on behalf of all of the inventors

○ A joint inventor; all of whom are signing this e-petition

○ The assignee of record of the entire interest that has properly made itself of record pursuant to 37 CFR 3.71

Signature	/Leonard P Diana/
Name	Leonard P Diana
Registration Number	29296

UNITED STATES PATENT AND TRADEMARK OFFICE

Commissioner for Patents
United States Patent and Trademark Office
P.O. Box 1450
Alexandria, VA 22313-1450
www.uspto.gov

MAILED

FEB 13 2012

OFFICE OF PETITIONS

BIRCH STEWART KOLASCH & BIRCH
PO BOX 747
FALLS CHURCH VA 22040-0747

In re Application of
TSUBOI, et al
Application No.: 12/865,038
Filed: July 28, 2010
Attorney Docket No.: 1609-0273PUS1
For: BASE STATION DEVICE, MOBILE STATION DEVICE, COMMUNICATION SYSTEM, COMMUNICATION METHOD, AND COMMUNICATION PROGRAM

: DECISION ON REQUEST TO
: PARTICIPATE IN THE PATENT
: PROSECUTION HIGHWAY
: PROGRAM AND PETITION
: TO MAKE SPECIAL UNDER
: 37 CFR 1.102(a)

This is a decision on the request to participate in the Patent Prosecution Highway (PPH) program and the petition under 37 CFR 1.102(a), filed January 25, 2012, to make the above-identified application special.

The request and petition are **GRANTED**.

Discussion

A grantable request to participate in the PPH pilot program and petition to make special require:

1. The U.S. application is

    a. a Paris Convention application which either
        i. validly claims priority under 35 U.S.C. 119(a) and 37 CFR 1.55 to one or more applications filed in the JPO, or
        ii. validly claims priority to a PCT application that contains no priority claims, or
    b. a national stage application under the PCT (an application which entered the national stage in the U.S. from a PCT international application after compliance with 35 U.S.C. 371), which PCT application
        i. validly claims priority to an application filed in the JPO, or
        ii. validly claims priority to a PCT application that contains no priority claims, or
        iii. contains no priority claim, or

c. a so-called bypass application filed under 35 U.S.C. 111(a) which validly claims benefit under 35 U.S.C. 120 to a PCT application, which PCT application
    i. validly claims priority to an application filed in the JPO, or
    ii. validly claims priority to a PCT application that contains no priority claims, or
    iii. contains no priority claim;

2. Applicant must submit a copy of:
    a. The allowable/patentable claim(s) from the JPO application(s);
    b. An English translation of the allowable/patentable claim(s) and
    c. A statement that the English translation is accurate;
3. Applicant must:
    a. Ensure all the claims in the U.S. application must sufficiently correspond or be amended to sufficiently correspond to the allowable/patentable claim(s) in the JPO application(s) and
    b. Submit a claims correspondence table in English;
4. Examination of the U.S. application has <u>not</u> begun;
5. Applicant must submit:
    a. Documentation of prior office action:
        i. a copy of the office action(s) just prior to the "Decision to Grant a Patent" from each of the JPO application(s) containing the allowable/patentable claim(s) or
        ii. if the allowable/patentable claims(s) are from a "Notification of Reasons for Refusal" then the Notification of Reasons for Refusal or
        iii. if the JPO application is a first action allowance then no office action from the JPO is necessary should be indicated on the request/petition form;
    b. An English language translation of the JPO Office action from (5)(a)(i)-(ii) above
    c. A statement that the English translation is accurate;
6. Applicant must submit:
    a. An IDS listing the documents cited by the JPO examiner in the JPO office action (unless already submitted in this application)
    b. Copies of the documents except U.S. patents or U.S. patent application publications (unless already submitted in this application);

The request to participate in the PPH pilot program and petition comply with the above requirements. Accordingly, the above-identified application has been accorded "special" status.

Inquiries concerning this decision should be directed to the undersigned at (571) 272-6735.

All other inquiries concerning the examination or status of the application is accessible in the PAIR system at http://www.uspto.gov/ebc.index.html.

This application is being forwarded to Technology Center AU 2473 for action on the merits commensurate with this decision.

/Diane Goodwyn/
Diane Goodwyn
Petitions Examiner
Office of Petitions

UNITED STATES PATENT AND TRADEMARK OFFICE

Commissioner for Patents
United States Patent and Trademark Office
P.O. Box 1450
Alexandria, VA 22313-1450
www.uspto.gov

Decision Date : April 11, 2012

In re Application of :

Mary Ann Nadler

Application No : 12865062

Filed : 28-Jul-2010

Attorney Docket No : WFG-4753-22

DECISION ON REQUEST TO WITHDRAW AS ATTORNEY/AGENTOF RECORD

This is an electronic decision on the Request to Withdraw as attorney or agent of record under 37 CFR § 1.36(b), filed April 11, 2012

The request is **APPROVED.**

The request was signed by Willem F. Gadiano (registration no. 37136) on behalf of all attorneys/agents associated with Customer Number 23117 . All attorneys/agents associated with Cusotmer Number 23117 have been withdrawn.

Since there are no remaining attorneys of record, all future communications from the Office will be directed to the first named inventor or assignee that has properly made itself of record pursuant to 37 CFR 3.71, with correspondence address:

Name	DiaKine Therapeutics, Inc.
Name2	
Address 1	J.A. Lindeman & Co. PLLC,
Address 2	3190 Fairview Park Drive, Suite 480
City	Falls Church
State	VA
Postal Code	22042
Country	US

As a reminder, requester is required to inform the first named inventor or assignee that has properly made itself of record pursuant to 37 CFR 3.71 of the electronically processed petition.

Telephone inquiries concerning this decision should be directed to the Patent Electronic Business Center (EBC) at 866-217-9197.

Office of Petitions

Doc Code: PET.AUTO **Document Description: Petition automatically granted by EFS-Web**	PTO/SB/83 U.S. Patent and Trademark Office Department of Commerce

Electronic Petition Request	**REQUEST FOR WITHDRAWAL AS ATTORNEY OR AGENT AND CHANGE OF CORRESPONDENCE ADDRESS**
Application Number	12865062
Filing Date	28-Jul-2010
First Named Inventor	Mary Ann Nadler
Art Unit	1629
Examiner Name	KEVIN WEDDINGTON
Attorney Docket Number	WFG-4753-22
Title	COMPOSITIONS AND METHODS FOR TREATING DIABETES USING LISOFYLLINE ANALOGS AND ISLET NEOGENESIS ASSOCIATED PEPTIDE

◉ Please withdraw me as attorney or agent for the above identified patent application and the practitioners of record associated with Customer Number: 23117

The reason(s) for this request are those described in 37 CFR:

10.40(c)(4)

Certifications

☒ I/We have given reasonable notice to the client, prior to the expiration of the response period, that the practitioner(s) intend to withdraw from employment

☒ I/We have delivered to the client or a duly authorized representative of the client all papers and property (including funds) to which the client is entitled

☒ I/We have notified the client of any responses that may be due and the time frame within which the client must respond

Change the correspondence address and direct all future correspondence to the first named inventor or assignee that has properly made itself of record pursuant to 37 CFR 3.71:

Name	DiaKine Therapeutics, Inc.
Address	J.A. Lindeman & Co. PLLC, 3190 Fairview Park Drive, Suite 480
City	Falls Church
State	VA
Postal Code	22042
Country	US

I am authorized to sign on behalf of myself and all withdrawing practitioners.	
Signature	/Willem F. Gadiano/
Name	Willem F. Gadiano
Registration Number	37136

UNITED STATES PATENT AND TRADEMARK OFFICE

UNITED STATES DEPARTMENT OF COMMERCE
United States Patent and Trademark Office
Address: COMMISSIONER FOR PATENTS
P.O. Box 1450
Alexandria, Virginia 22313-1450
www.uspto.gov

APPLICATION NO.	FILING DATE	FIRST NAMED INVENTOR	ATTORNEY DOCKET NO.	CONFIRMATION NO.
12/865,073	07/28/2010	Tomoyuki Komori	14434.358USWO	1058

53148 7590 04/18/2011
HAMRE, SCHUMANN, MUELLER & LARSON P.C.
P.O. BOX 2902
MINNEAPOLIS, MN 55402-0902

EXAMINER

ART UNIT	PAPER NUMBER
1725	

MAIL DATE	DELIVERY MODE
04/18/2011	PAPER

Please find below and/or attached an Office communication concerning this application or proceeding.

The time period for reply, if any, is set in the attached communication.

UNITED STATES PATENT AND TRADEMARK OFFICE

Commissioner for Patents
United States Patent and Trademark Office
P.O. Box 1450
Alexandria, VA 22313-1450
www.uspto.gov

EL

April 18, 2011

In re application of Komori, et al. Serial No. 12/865,073 Filed: July 28, 2010 For: **THERMOELECTRIC ELEMENT AND THERMOELECTRIC DEVICE**	: : : : : :	DECISION ON REQUEST TO PARTICIPATE IN PATENT PROSECUTION HIGHWAY PROGRAM AND PETITION TO MAKE SPECIAL UNDER 37 CFR 1.102(a)

This is a decision on the request to participate in the Patent Prosecution Highway (PPH) program and the petition under 37 CFR 1.102(a) to make the above-identified application special filed February 01, 2011.

The request and petition are **GRANTED**.

A grantable request to participate in the PPH program and petition to make special require:

(1) The U.S. application must validly claim priority under 35 U.S.C. 119(a) to one or more applications filed in the JPO, note where the JPO application with similar claims is not the same application from which the U.S. application claims priority that the applicant must identify the relationship between the JPO application with similar claims and the JPO priority application;

(2) Applicant must submit a copy of:
   a. The allowable/patentable claim(s) from the JPO application(s) or if a copy of the allowable/patentable claims is available via the Dossier Access System (DAS) applicant may request the USPTO to obtain a copy from DAS; however, if the USPTO is unable to obtain a copy from the DAS, the applicant will be required to submit a copy;
   b. An English translation of the allowable/ patentable claim(s), if applicable; and
   c. A statement that the English translation is accurate, if applicable;

(3) Applicant must:
   a. Ensure all the independent claims in the U.S. application must sufficiently correspond or be amended to sufficiently correspond to the allowable/patentable claim(s) in the JPO application(s); and
   b. Submit a claims correspondence table in English;

(4) Examination of the U.S. application has not begun;

(5) Applicant must submit:
   a. Documentation of prior office action:
      i. a copy of the office action(s) just prior to the "Decision to Grant a Patent" from each of the JPO application(s) containing the allowable/patentable claims(s) or
      ii. if the allowable/patentable claim(s) are from "Notification of Reasons for Refusal" then the Notification of Reasons for Refusal or
      iii. if the JPO application is a first action allowance then no office action from the JPO is necessary should be indicated on the request/petition form;
      Further, if a copy of the documents from (i) or (ii) is available via the Dossier Access System (DAS), applicant may request the USPO obtain a copy from the DAS; however, if the USPTO is unable to obtain a copy of the DAS, the applicant will be required to submit a copy; and
   b. An English language translation of the JPO Office action from (5)(a)(i)-(ii) above if applicable; and

(6) Applicant must submit:
   a. An IDS listing the documents cited by the JPO examiner in the JPO office action (unless already submitted in this application)
   b. Copies of documents except U.S. patents or U.S. patent application publications (unless already submitted in this application).

The request to participate in the PPH program and petition comply with the above requirements. Accordingly, the above-identified application has been accorded "special" status.

The application is being forwarded to the examiner for action on the merits commensurate with this decision.

Any inquiry regarding this decision should be directed to Emily M. Le, Supervisory Patent Examiner, at (571) 272-0903.

All other inquiries concerning the examination or status of the application is accessible in the PAIR system at http://www.uspto.gov/ebc/index.html.

/ Emily M. Le/

Emily M. Le
Supervisory Patent Examiner,
Technology Center 1700

UNITED STATES PATENT AND TRADEMARK OFFICE

Commissioner for Patents
United States Patent and Trademark Office
P.O. Box 1450
Alexandria, VA 22313-1450
www.uspto.gov

MAILED

APR 11 2011

PCT LEGAL ADMINISTRATION

MCCRACKEN & FRANK LLP
311 S. WACKER DRIVE
SUITE 2500
CHICAGO IL 60606

In re Application of	:	
LUTZ, Peter	:	
U.S. Application No.: 12/865,100	:	DECISION ON
PCT No.: PCT/EP2009/000575	:	
Int. Filing Date: 29 January 2009	:	PETITION UNDER
Priority Date: 30 January 2008	:	
Attorney Docket No.: 80330/40332	:	37 CFR 1.47(b)
For: KNIFE FOR THE MACHINING OF	:	
SPOT WELDING ELECTRODES,	:	
CUTTING TOOL AND CAP CUTTER	:	

This is a decision on applicant's Petition Under 37 CFR 1.47(b), filed in the United States Patent and Trademark Office (USPTO) on 16 December 2010.

BACKGROUND

On 17 September 2010, the Office mailed Notification of Missing Requirements (Form PCT/DO/EO/905) indicating that an oath or declaration of the inventors and the surcharge for late furnishing of the search fee, examination fee or oath or declaration were required.

On 16 December 2010, applicant filed this petition under 37 CFR 1.47, the surcharge and the fee for a one month extension of time.

DISCUSSION

A petition under 37 CFR 1.47(b) must be accompanied by: (1) the fee under 37 CFR 1.17(g), (2) factual proof that the inventor refuses to execute the application or cannot be reached after diligent effort, (3) a statement of the last known address of the inventor, (4) an oath or declaration by the 37 CFR 1.47(b) applicant on behalf of and as agent for the non-signing inventor, (5) proof that the 37 CFR 1.47(b) applicant has sufficient proprietary interest in the application, and (6) a showing that such action is necessary to preserve the rights of the parties or to prevent irreparable damage.

Items (1), (3), (4) and (6) have been satisfied. The $200 petition fee has been paid. Applicant states the last known address of Peter Lutz as Planegger Str. 79, 81241 Munich, Germany. The declaration complies with 37 CFR 1.47. Applicant has made the showing that the petition is necessary to preserve the rights of the parties.

Item (2) has not been satisfied. The return receipt postcard has not been translated. Non-translated, non-English language material will not be considered.

Item (5) has not been satisfied. Applicant claims to have obtained proprietary interest through assignments. However, the purported assignments have not been recorded. The Office will only act on documents that have been recorded or are concurrently being submitted for recordation. 37 CFR 3.73. Proof of proprietary interest in compliance with 37 CFR 3.73 is required. Translations of the complete documents are required. The translations must also be legible.

CONCLUSION

For the above reasons, applicant's petition under 37 CFR 1.47(b) is **DISMISSED**, without prejudice.

If reconsideration on the merits of this petition is desired, a proper response must be filed within **TWO (2) MONTHS** from the mail date of this decision. Failure to timely file the proper response will result in abandonment of this application. Extensions of time are available under 37 CFR 1.136(a). Any reconsideration request should include a cover letter entitled "Renewed Petition Under 37 CFR 1.47(b)".

Any further correspondence with respect to this matter may be filed electronically via EFS-Web selecting the document description "Petition for review and processing by the PCT Legal Office" or by mail addressed to Mail Stop PCT, Commissioner for Patents, Office of PCT Legal Administration, P.O. Box 1450, Alexandria, Virginia 22313-1450, with the contents of the letter marked to the attention of the Office of PCT Legal Administration.

/Erin P. Thomson/

Erin P. Thomson
Attorney Advisor
PCT Legal Administration

Telephone: 571-272-3292

UNITED STATES PATENT AND TRADEMARK OFFICE

UNITED STATES DEPARTMENT OF COMMERCE
United States Patent and Trademark Office
Address: COMMISSIONER FOR PATENTS
P.O. Box 1450
Alexandria, Virginia 22313-1450
www.uspto.gov

APPLICATION NO.	FILING DATE	FIRST NAMED INVENTOR	ATTORNEY DOCKET NO.	CONFIRMATION NO.
12/865,102	07/28/2010	Byoung-Hoon Kim	5438-0190PUS1	1264

2292 7590 07/01/2011
BIRCH STEWART KOLASCH & BIRCH
PO BOX 747
FALLS CHURCH, VA 22040-0747

EXAMINER
YAO, KWANG BIN

ART UNIT	PAPER NUMBER
2473	

NOTIFICATION DATE	DELIVERY MODE
07/01/2011	ELECTRONIC

Please find below and/or attached an Office communication concerning this application or proceeding.

The time period for reply, if any, is set in the attached communication.

Notice of the Office communication was sent electronically on above-indicated "Notification Date" to the following e-mail address(es):

mailroom@bskb.com

UNITED STATES PATENT AND TRADEMARK OFFICE

Commissioner for Patents
United States Patent and Trademark Office
P.O. Box 1450
Alexandria, VA 22313-1450
www.uspto.gov

BIRCH STEWART KOLASCH & BIRCH
PO BOX 747
FALLS CHURCH VA 22040-0747

In re Application of: KIM et al.
Application No. 12865102
Filed: July 28, 2010
For: DATA TRANSMISSION METHOD IN A MULTI-CARRIER SYSTEM AND TRANSMITTER

DECISION ON REQUEST TO PARTICIPATE IN PATENT PROSECUTION HIGHWAY PROGRAM AND PETITION TO MAKE SPECIAL UNDER 37 CFR 1.102(d)

This is a decision on the request to participate in the Patent Prosecution Highway (PPH) program and the petition under 37 CFR 1.102(d), filed October 20, 2010, to make the above-identified application special.

The petition is **GRANTED.**

A grantable request to participate in the PPH program and petition to make special require:

(1) The U.S. application is
(a) a Paris Convention application which either
(i) validly claims priority under 35 U.S.C. 119(a) and 37 CFR 1.55 to one or more applications filed in the KIPO, or
(ii) validly claims priority to a PCT application that contains no priority claims,

Or

(b) a national stage application under the PCT (an application which entered the national stage in the U.S. from a PCT international application after compliance with 35 U.S.C. 371), which PCT application
(i) validly claims priority to an application filed in the KIPO, or
(ii) validly claims priority to a PCT application that contains no priority claims, or
(iii) contains no priority claim,

Or

(c) a so-called bypass application filed under 35 U.S.C. 111 (a) which validly claims benefit under 35 U.S.C. 120 to a PCT application, which PCT application
(i) validly claims priority to an application filed in the KIPO, or
(ii) validly claims priority to a PCT application that contains no priority claims, or
(iii) contains no priority claim.

Where the KIPO application that contains the allowable/patentable claims is not the same application for which priority is claimed in the U.S. application, applicant must identify the relationship between the KIPO application that contains the allowable/patentable claims and the KIPO priority application claimed in the U.S. application;

(2) Applicant must submit a copy of:
a. The allowable/patentable claim(s) from the KR application(s);
b. An English translation of the allowable/patentable claim(s), if the claims were published in a language other than English); and
c. A statement that the English translation is accurate;

(3) Applicant must:
a. Ensure all the claims in the U.S. application must sufficiently correspond or be amended to sufficiently correspond to the allowable/patentable claim(s) in the KIPO application(s) and
b. Submit a claim correspondence table in English;

(4) Examination of the U.S. application has not begun;

(5) Applicant must submit:
a. A copy of all the office action(s) (which are relevant to patentability), excluding "Decision to Grant a Patent" from each of the KR application(s) containing the allowable/patentable claim(s);
b. An English language translation of the KIPO office action(s) (if the office action(s) are not in the English language); and
c. A statement that the English translation is accurate;

(6) Applicant must submit:
a. An IDS listing the documents cited by the KIPO examiner in the KIPO office action (unless already filed in this application); and
b. Copies of all the documents cited in the KIPO office action, except U.S. patents or U.S. patent application publications (unless already filed in this application).

The request to participate in the PPH program and petition are found to comply with all the above requirements. Accordingly, the above-identified application has been accorded "special" status.

Telephone inquiries concerning this decision should be directed to Kim Huynh at 571-272-4147. All other inquiries concerning the examination or status of the application is accessible in the PAIR system at http://www.uspto.gov/ebc/index.html.

/Kim Huynh/

Kim Huynh
Quality Assurance Specialist
Technology Center 2400

UNITED STATES PATENT AND TRADEMARK OFFICE

Commissioner for Patents
United States Patent and Trademark Office
P.O. Box 1450
Alexandria, VA 22313-1450
www.uspto.gov

34440
COLLEN IP
THE HOLYOKE MANHATTAN BUILDING
80 South Highland Avenue
Ossining, NY 10562

MAILED
DEC 20 2010
PCT LEGAL ADMINISTRATION

In re Application of
BERENGUER *et al*
U.S. Application No.: 12/865,205
PCT No.: PCT/ES2008/000183
Int. Filing Date: 28 March 2008
Priority Date: 01 February 2008
Attorney Docket No.: K719
For: SLOT RACING MOTORCYCLE

DECISION

This decision is in response to the petition under 37 CFR 1.182 filed 21 October 2010.

BACKGROUND

On 29 July 2010, applicants filed papers using the USPTO EFS-Web system as the national stage of PCT/ES2008/000193. All other papers filed on the initial filing listed the international application as PCT/ES2008/000183.

On 01 September 2010, the DO/EO/US mailed a Notification of Missing Requirements under 35 U.S.C. 371 (Form PCT/DO/EO/905) stating that an English translation, processing fee, surcharge fee, and a declaration in compliance with 37 CFR 1.497(a) and (b) was required. Applicants were given two months to respond with extensions of time available pursuant to 37 CFR 1.136(a).

On 03 September 2010, applicants filed an executed declaration.

On 21 September 2010, the DO/EO/US mailed a Notification of Defective Response (Form PCT/DO/EO/916) stating that the declaration provided was not in compliance with 37 CFR 1.497(a) and (b) as the names of the inventors were different than listed on the international application and an English translation and processing fee were still required. Applicants were given one month to respond or any time remaining in the Form PCT/DO/EO/905, whichever was longer.

On 21 October 2010, applicants filed the subject petition.

DISCUSSION

Applicants claim that a typographical error was made during the initial online application process resulting in the wrong PCT number being listed. Applicants' petition under 37 CFR 1.182 to correct the PCT number to PCT/ES2008/000183. The $400.00 petition fee has been paid.

A review of the above-captioned application file verifies that the wrong PCT number (PCT/ES2008/000193) was designated when filing the application electronically using the USPTO EFS-Web. The transmittal letter, ADS, and international papers filed 29 July 2010 list the international application number as PCT/ES2008/000183. The specification, claims and drawings filed at the same time are for PCT/ES2008/000183. WIPO records show that the title, international filing date, priority date and listed applicants correspond to PCT/ES2008/000183.

Thus, it is clear that the subject application was intended to be filed as the national stage of PCT/ES2008/000183 but for the typographical error made upon filing.

CONCLUSION

Applicants' petition under 37 CFR 1.182 is **GRANTED**.

USPTO records have been changed to reflect that the above-captioned application is the national stage of PCT/ES2008/000183 claiming priority to a Spanish patent application filed 01 February 2008.

The Form PCT/DO/EO/905 mailed 01 September 2010 and the Form PCT/DO/EO/916 mailed 21 September 2010 are hereby **VACATED**.

This application is being forwarded to the DO/EO/US for further processing in accordance with this decision.

James Thomson

James Thomson
Attorney Advisor
Office of PCT Legal Administration

Tel.: (571) 272-3302

UNITED STATES PATENT AND TRADEMARK OFFICE

COMMISSIONER FOR PATENTS
UNITED STATES PATENT AND TRADEMARK OFFICE
P.O. BOX 1450
ALEXANDRIA, VA 22313-1450
www.uspto.gov

BIRCH STEWART KOLASCH & BIRCH
PO BOX 747
FALLS CHURCH, VA 22040-0747

MAILED
FEB 07 2011
PCT LEGAL ADMINISTRATION

In re Application of NAKAMURA et al	:	
U.S. Application No.: 12/865,228	:	
PCT Application No.: PCT/JP2009/051319	:	DECISION
Int. Filing Date: 28 January 2009	:	
Priority Date Claimed: 30 January 2008	:	
Attorney Docket No.: 5132-0156PUS1	:	
For: RELAY DEVICE, COMMUNICATION SYSTEM, AND COMMUNICATION METHOD	:	

This is in response to applicant's petition under 37 CFR 1.181 filed 14 October 2010.

BACKGROUND

On 28 January 2009, applicant filed international application PCT/JP2009/051319, which claimed priority of an earlier Japan application filed 30 January 2008. A copy of the international application was communicated to the USPTO from the International Bureau on 06 August 2009. The thirty-month period for paying the basic national fee in the United States expired on 30 July 2010.

On 29 July 2010, applicant filed national stage papers in the United States Designated/Elected Office (DO/EO/US). The submission was accompanied by, *inter alia*, the basic national fee required by 35 U.S.C. 371(c)(1).

On 05 October 2010, the DO/EO/US mailed a Notification of Abandonment (Form PCT/DO/EO/909), which stated that the application is abandoned for failure to provide a copy of the international application.

On 14 October 2010, applicant filed the present petition under 37 CFR 1.181.

DISCUSSION

A review of Office records indicates that a copy of the international application was provided to the Office on 06 August 2009. Accordingly, the Notification of Abandonment was sent in error.

CONCLUSION

For the reasons above, the petition under 37 CFR 1.181 is GRANTED.

The Notification of Abandonment (Form PCT/DO/EO/909) mailed 05 October 2010 is hereby VACATED.

This application is being forwarded to the United States Designated/Elected Office (DO/EO/US) for further processing in accordance with this decision, including preparation and mailing of a Notification of Missing Requirements under 35 U.S.C. 371 (Form PCT/DO/EO/905) indicating that the declaration filed 09 September 2010 fails to indicate the citizenship of the fourth inventor.

Bryan Lin

Bryan Lin
PCT Legal Examiner
PCT Legal Office

Telephone: 571-272-3303
Facsimile: 571-273-0459

3 0 AUG 2010

UNITED STATES PATENT AND TRADEMARK OFFICE

Commissioner for Patents
United States Patent and Trademark Office
P.O. Box 1450
Alexandria, VA 22313-1450
www.uspto.gov

DOBRUSIN & THENNISCH PC
29 W LAWRENCE ST
SUITE 210
PONTIAC MI 48342

In re Application of	:	
TOMLINSON	:	
Application No.: 12/865,249	:	DECISION
PCT No.: PCT/EP2009/000172	:	
Int. Filing Date: 14 January 2009	:	
Priority Date: 14 January 2008	:	
Attorney Docket No.: 1576-001	:	
For: DELAYED LOCK UP/FREEWHEEL	:	
BEARING AND AN IMPROVED NON-BONDED	:	
TORSION BUSH	:	

This decision is in response to applicant's submission filed 29 July 2010 in the United States Patent and Trademark Office (USPTO).

BACKGROUND

On 14 January 2009, applicant filed international application PCT/EP2009/000172 which designated the U.S. and claimed a priority date of 14 January 2008. A copy of the international application was communicated to the USPTO from the International Bureau on 23 July 2009. The thirty-month period for paying the basic national fee in the United States expired at midnight on 14 July 2010.

On 29 July 2010, applicant filed a transmittal letter for entry into the national stage in the United States, which was accompanied by, *inter alia*, the U.S. Basic National Fee and a petition under 37 CFR 1.137(b) to revive the application.

DISCUSSION

A petition to revive the present application under 37 CFR 1.137(b) must include:

(1) The required reply;
(2) The petition fee;
(3) A statement that the entire delay in filing the required reply from the due date for the reply until the filing of a grantable petition was unintentional.

As to item (1), applicant submitted the basic national fee on 29 July 2010.

As to item (2), applicant submitted the petition fee on 29 July 2010.

As to item (3), the required statement has been provided.

A review of the application file reveals that, with the filing of the present petition and accompanying papers, a proper response has been submitted and all of the requirements of 37 CFR 1.137(b) for revival have been satisfied and revival is therefore appropriate.

CONCLUSION

The petition under 37 CFR 1.137(b) is **GRANTED** for the reasons set forth above.

This application is being forwarded to the National Stage Processing Branch of the Office of PCT Operations to continue national stage processing of the application including preparing and mailing a NOTIFICATION OF MISSING REQUIREMENTS (Form PCT/DO/EO/905) requiring an executed oath or declaration of the inventor in compliance with 37 CFR 1.497(a)-(b).

/Daniel Stemmer/

Daniel Stemmer
Legal Examiner
PCT Legal Affairs
Office of Patent Cooperation Treaty
Legal Administration
Telephone: (571) 272-3301

UNITED STATES PATENT AND TRADEMARK OFFICE

Commissioner for Patents
United States Patent and Trademark Office
P.O. Box 1450
Alexandria, VA 22313-1450
www.uspto.gov

MAILED
NOV 21 2011
OFFICE OF PETITIONS

LERNER, DAVID, LITTENBERG,
KRUMHOLZ & MENTLIK
600 SOUTH AVENUE WEST
WESTFIELD NJ 07090

Applicants: Mark Herzog, et al.
Appl. No.: 12/865,268
International Filing Date: January 15, 2009
Title: SYSTEM FOR SIMULTANEOUSLY MOVING SEVERAL ROWS OF SEATS IN A LONGITUDINAL DIRECTION
Attorney Docket: AIRBUS 3.3-223
Pub. No.: US 20110062285 A1
Pub. Date: March 17, 2011

This is a decision on the request for a corrected patent application publication under 37 CFR 1.221(b), received on May 17, 2011, for the above-identified application.

The request is DISMISSED.

Applicant requests that the application be republished because the patent application publication contains material errors wherein the preliminary amendment filed on November 29, 2010 was not included in the publication.

37 CFR 1.221 (b) is applicable "only when the Office makes a material mistake which is apparent from Office records.... Any request for a corrected publication or revised patent application publication other than provided as provided in paragraph (a) of this section must be filed within two months from the date of the patent application publication. This period is not extendable." A material mistake must affect the public's ability to appreciate the technical disclosure of the patent application publication, to determine the scope of the patent application publication, or to determine the scope of the provisional rights that an applicant may seek to enforce upon issuance of a patent. [1]

The error noted by requestor with respect to the preliminary amendment is <u>not</u> an Office error. The patent application publication does not include a mistake regarding the failure to include the preliminary amendment to the specification because patent application publications are not required to include preliminary amendments. See 37 CFR 1.215(a). The "failure to include an amendment is not an Office error." See MPEP 1130(b).

---

[1] <u>Changes to Implement Eighteen-Month Publication of Patent Applications</u>, 65 FR 57023, 57038 (Sept. 20, 2000), 1239, <u>Off. Gaz. Pat. Office Notices</u> 63, 75 (Oct. 10, 2000) (final rule).

37 C.F.R. 1.215(a) states that the patent application publication may also be based upon amendments to the specification (other than the abstract or the claims) that are reflected in a substitute specification under § 1.125(b), amendments to the abstract under § 1.121(b), amendments to the claims that are reflected in a complete claim listing under § 1.121(c), and amendments to the drawings under §1.121(d), provided that such substitute specification or amendment is submitted in sufficient time to be entered into the Office file wrapper of the application before technical preparations for publication of the application have begun. (emphasis added) 37 CFR 1.215(c) states that applicant may file an amended copy of the application for publication purposes, but such amendments, including a substitute specification, must be submitted in compliance with the Office electronic filing system requirements, and within one month of the mailing date of the first Office communication that includes a confirmation number for the application, or fourteen months of the earliest filing date for which a benefit is sought under title 35, United States Code, whichever is later.

Applicant is advised that a "request for republication of an application previously published" may be filed under 37 CFR 1.221 (a). Such a request for republication "must include a copy of the application compliance with the Office's electronic filing system requirements and be accompanied by the publication fee set forth in § 1.18 (d) and the processing fee set forth in § 1.17 (i)." If the request for republication does not comply with the electronic filing system requirements, the republication will not take place and the publication fee set forth in § 1.18 (d) will be refunded. The processing fee will be retained.

A guide for filing a request for a Pre-Grant Publication, such as a request for republication, may be found on the link below:

http://www.uspto.gov/patents/process/file/efs/guidance/index.jsp
OR
http://www.uspto.gov/ebc/portal/efs/pgpub_quickstart.pdf

Any request for republication under 37 CFR 1.221(a), must be submitted via the EFS system, as a "Pre-Grant Publication".

Inquiries relating to this matter may be directed to Karen Creasy at (571) 272-3208.

/Christopher Bottorff/

Christopher Bottorff
Petitions Examiner
Office of Petitions

UNITED STATES PATENT AND TRADEMARK OFFICE

UNITED STATES DEPARTMENT OF COMMERCE
United States Patent and Trademark Office
Address: COMMISSIONER FOR PATENTS
P.O. Box 1450
Alexandria, Virginia 22313-1450
www.uspto.gov

APPLICATION NO.	FILING DATE	FIRST NAMED INVENTOR	ATTORNEY DOCKET NO.	CONFIRMATION NO.
12/865,284	07/29/2010	Satoru Koshio	100990	1728

38834 7590 10/22/2010
WESTERMAN, HATTORI, DANIELS & ADRIAN, LLP
1250 CONNECTICUT AVENUE, NW
SUITE 700
WASHINGTON, DC 20036

EXAMINER

ART UNIT	PAPER NUMBER
1746	

NOTIFICATION DATE	DELIVERY MODE
10/22/2010	ELECTRONIC

Please find below and/or attached an Office communication concerning this application or proceeding.

The time period for reply, if any, is set in the attached communication.

Notice of the Office communication was sent electronically on above-indicated "Notification Date" to the following e-mail address(es):

patentmail@whda.com

UNITED STATES PATENT AND TRADEMARK OFFICE

Commissioner for Patents
United States Patent and Trademark Office
P.O. Box 1450
Alexandria, VA 22313-1450
www.uspto.gov

OCT 22 2010

CST

In re application of Satoru Koshio et al Serial No. 12/865,284 Filed: July 29, 2010 For: MANUFACTURING SYSTEM FOR AN OPTICAL DISPLAY DEVICE	: : : : : :	DECISION ON REQUEST TO PARTICIPATE IN PATENT PROSECUTION HIGHWAY PROGRAM AND PETITION TO MAKE SPECIAL UNDER 37 CFR 1.102(a)

This is a decision on the request to participate in the Patent Prosecution Highway (PPH) program filed August 20, 2010.

The request and petition are **GRANTED**.

A grantable request to participate in the PPH program and petition to make special require:

(1) The U.S. application must validly claim priority under 35 U.S.C. 119(a) to one or more applications filed in the JPO, note where the JPO application with similar claims is not the same application from which the U.S. application claims priority that the applicant must identify the relationship between the JPO application with similar claims and the JPO priority application;

(2) Applicant must submit a copy of:
   a. The allowable/patentable claim(s) from the JPO application(s) or if a copy of the allowable/patentable claims is available via the Dossier Access System (DAS) applicant may request the USPTO to obtain a copy from DAS; however, if the USPTO is unable to obtain a copy from the DAS, the applicant will be required to submit a copy;
   b. An English translation of the allowable/ patentable claim(s), if applicable; and
   c. A statement that the English translation is accurate, if applicable;

(3) Applicant must:
   a. Ensure all the claims in the U.S. application must sufficiently correspond or be amended to sufficiently correspond to the allowable/patentable claim(s) in the JPO application(s); and
   b. Submit a claims correspondence table in English

(4) Examination of the U.S. application has not begun;

(5) Applicant must submit:
   a. Documentation of prior office action:
      i. a copy of the office action(s) just prior to the "Decision to Grant a Patent" from each of the JPO application(s) containing the allowable/patentable claims(s) or
      ii. if the allowable/patentable claim(s) are from "Notification of Reasons for Refusal" then the Notification of Reasons for Refusal or
      iii. if the JPO application is a first action allowance then no office action from the JPO is necessary should be indicated on the request/petition form:
      Further, if a copy of the documents from a or b is available via the Dossier Access System (DAS), applicant may request the USPO obtain a copy from the DAS; however, if the USPTO is unable to obtain a copy of the DAS, the applicant will be required to submit a copy;
   b. An English language translation of the JPO Office action from (5)(a)(i)-(ii) above if applicable; and
   c. A statement that the English translation is accurate; and

(6) Applicant must submit:
   a. An IDS listing the documents cited by the JPO examiner in the JPO office action (unless already submitted in this application)
   b. Copies of documents except U.S. patents or U.S. patent application publications (unless already submitted in this application).

The request to participate in the PPH program and petition comply with the above requirements. Accordingly, the above-identified application has been accorded "special" status.

The application is being forwarded to the examiner for action on the merits commensurate with this decision.

Any inquiry regarding this decision should be directed to Christine Tierney, Quality Assurance Specialist, at (571) 272-1055.

All other inquiries concerning the examination or status of the application is accessible in the PAIR system at http://www.uspto.gov/ebc/index.html.

/Christine Tierney/

Christine Tierney
Quality Assurance Specialist
Technology Center 1700

UNITED STATES PATENT AND TRADEMARK OFFICE

Commissioner for Patents
United States Patent and Trademark Office
P.O. Box 1450
Alexandria, VA 22313-1450
www.uspto.gov

MAILED

OCT 29 2010

PCT LEGAL ADMINISTRATION

Novak Druce + Quigg LLP
1000 Louisiana Street
Fifty-Third Floor
Houston TX 77002

In re Application of	:	
CHEN et al.	:	
Application No.: 12/865,292	:	
PCT No.: PCT/US2009/032662	:	DECISION ON PETITION
Int. Filing Date: 30 January 2009	:	UNDER 37 CFR 1.137(b)
Priority Date: 30 January 2008	:	
Attorney Docket No.: 20013.0009.CPUS00	:	
For: ILEAL ELECTRICAL STIMULATION	:	

The petition to revive under 37 CFR 1.137(b) filed 04 October 2010 in the above-captioned application is hereby **GRANTED** as follows:

Applicant's statement that "the entire delay in filing the required reply from the due date for the reply until the filing of a grantable petition under 37 CFR 1.137(b) was unintentional" meets the requirements of 37 CFR 1.137(b)(3).

A review of the application file reveals that applicant has submitted the basic national fee and the requirements of 37 CFR 1.137(b) have been satisfied. Therefore, the request to revive the application abandoned under 35 U.S.C. 371(d) is granted as to the National stage in the United States of America.

This application is being returned to the United States Designated/Elected Office for processing in accordance with this decision.

Anthony Smith
Attorney-Advisor
Office of PCT Legal Administration
Tel: (571) 272-3298

United States Patent and Trademark Office

Commissioner for Patents
United States Patent and Trademark Office
P.O. Box 1450
Alexandria, VA 22313-1450
www.uspto.gov

Virtual Law Partners LLP
555 Bryant Street
Suite 820
Palo Alto CA 94301

MAILED

JAN 18 2011

PCT LEGAL ADMINISTRATION

In re Application of	:	
Foster et al.	:	
Application No.: 12/865,336	:	
PCT No.: PCT/EP2009/051033	:	
Int. Filing Date: 29 January 2009	:	DECISION
Priority Date: 31 January 2008	:	
Attorney Docket No.: 0765-01-003US1	:	
For: Treatment of Microbial Infections	:	

This is in response to the correspondence filed on 30 September 2010.

DISCUSSION

This international application was filed on 29 January 2009 and claimed a priority date of 31 January 2008. The United States was designated. The International Bureau transmitted a copy of the published international application to the USPTO on 06 August 2009. The thirty month period for payment of the basic national fee in the United States expired as of midnight on 31 July 2010. On 29 July 2010, applicant filed *inter alia* a small entity basic national fee. The accompanying Transmittal Letter included a claim of small entity status.

DISCUSSION

Applicants indicate that small entity status was established "at the time of filing... in good faith, but it has subsequently been discovered that such status was established in error." Accordingly, applicants assert "that the Application is no longer entitled to 'Small Entity Status' for the purpose of paying reduced fees in connection therewith."

Review of the record reveals that applicants initially paid the following small entity fees: basic national fee ($165.00), examination fee ($110.00), search fee ($215.00), and surcharge under 37 CFR 1.492(h)($65.00). On 30 September 2010, applicants paid a further $555.00 which is characterized as a deficiency payment.

MPEP 509.03 explains (in part) that

> 37 CFR 1.28(c) provides that if small entity status is established in good faith and the small entity fees are paid in good faith, and it is later discovered that such status as a small entity was established in error or through error the Office was not notified of a change of status, the error will be excused upon compliance with the separate submission and itemization requirements of 37 CFR 1.28(c)(1) and (c)(2), and the deficiency payment requirement of 37 CFR 1.28(c)(2). The deficiency amount owed under 37 CFR 1.28(c) is calculated using the date on which the deficiency was paid in full. See 37 CFR 1.28(b)(2).

Review of the instant submission reveals that applicants have properly itemized the fee deficiencies and paid the deficient fee amounts. Therefore, it would be appropriate to accept the deficiency payment, and to excuse the error in establishment of small entity status, under 37 CFR 1.28(c).

DECISION

The deficiency payment is **ACCEPTED**.

This application is being returned to the Office of Patent Application Processing.

/George Dombroske/
George Dombroske
PCT Legal Examiner
Office of PCT Legal Administration
Tel: (571) 272-3283
Fax: (571) 273-0459

UNITED STATES PATENT AND TRADEMARK OFFICE

UNITED STATES DEPARTMENT OF COMMERCE
United States Patent and Trademark Office
Address: COMMISSIONER FOR PATENTS
P.O. Box 1450
Alexandria, Virginia 22313-1450
www.uspto.gov

APPLICATION NO.	FILING DATE	FIRST NAMED INVENTOR	ATTORNEY DOCKET NO.	CONFIRMATION NO.
12/865,347	07/29/2010	Kohei Takahashi	14434.359USWO	2159

53148 7590 03/24/2011
HAMRE, SCHUMANN, MUELLER & LARSON P.C.
P.O. BOX 2902
MINNEAPOLIS, MN 55402-0902

EXAMINER
HANNAHER, CONSTANTINE

ART UNIT	PAPER NUMBER
2884	

MAIL DATE	DELIVERY MODE
03/24/2011	PAPER

Please find below and/or attached an Office communication concerning this application or proceeding.

The time period for reply, if any, is set in the attached communication.

UNITED STATES PATENT AND TRADEMARK OFFICE

Commissioner for Patents
United States Patent and Trademark Office
P.O. Box 1450
Alexandria, VA 22313-1450
www.uspto.gov

HAMRE, SCHUMANN, MUELLER & LARSON P.C.
P.O. BOX 2902
MINNEAPOLIS MN 55402-0902

In re Application of	**: DECISION ON REQUEST TO**
TAKAHASHI et al.	**: PARTICIPATE IN THE PATENT**
Application No.: 12/865,347	**: PROSECUTION HIGHWAY**
Filed: 29 July 2010	**: PROGRAM AND PETITION**
Attorney Docket No.: 14434.359USWO	**: TO MAKE SPECIAL UNDER**
For: RADIATION DETECTOR AND	**: 37 CFR 1.102(a)**
RADIATION DETECTION METHOD	

This is a decision on the request to participate in the Patent Prosecution Highway (PPH) program and the petition under 37 CFR 1.102(a), filed 01 February 2011, to make the above-identified application special.

The request and petition are **GRANTED**.

Discussion

A grantable request to participate in the PPH pilot program and petition to make special require:

1. The U.S. application is
    a. a Paris Convention application which either
        i. validly claims priority under 35 U.S.C. 119(a) and 37 CFR 1.55 to one or more applications filed in the JPO, or
        ii. validly claims priority to a PCT application that contains no priority claims, or
    b. a national stage application under the PCT (an application which entered the national stage in the U.S. from a PCT international application after compliance with 35 U.S.C. 371), which PCT application
        i. validly claims priority to an application filed in the JPO, or
        ii. validly claims priority to a PCT application that contains no priority claims, or
        iii. contains no priority claim, or
    c. a so-called bypass application filed under 35 U.S.C. 111(a) which validly claims benefit under 35 U.S.C. 120 to a PCT application, which PCT application
        i. validly claims priority to an application filed in the JPO, or
        ii. validly claims priority to a PCT application that contains no priority claims, or
        iii. contains no priority claim;
2. Applicant must submit a copy of:

a. The allowable/patentable claim(s) from the JPO application(s);
b. An English translation of the allowable/patentable claim(s) and
c. A statement that the English translation is accurate;

3. Applicant must:
   a. Ensure all the claims in the U.S. application must sufficiently correspond or be amended to sufficiently correspond to the allowable/patentable claim(s) in the JPO application(s) and
   b. Submit a claims correspondence table in English;
4. Examination of the U.S. application has not begun;
5. Applicant must submit:
   a. Documentation of prior office action:
      i. a copy of the office action(s) just prior to the "Decision to Grant a Patent" from each of the JPO application(s) containing the allowable/patentable claim(s) or
      ii. if the allowable/patentable claims(s) are from a "Notification of Reasons for Refusal" then the Notification of Reasons for Refusal or
      iii. if the JPO application is a first action allowance then no office action from the JPO is necessary should be indicated on the request/petition form;
   b. An English language translation of the JPO Office action from (5)(a)(i)-(ii) above
   c. A statement that the English translation is accurate;
6. Applicant must submit:
   a. An IDS listing the documents cited by the JPO examiner in the JPO office action (unless already submitted in this application)
   b. Copies of the documents except U.S. patents or U.S. patent application publications (unless already submitted in this application);

The request to participate in the PPH pilot program and petition comply with the above requirements. Accordingly, the above-identified application has been accorded "special" status.

Inquiries concerning this decision should be directed to Lee W. Young at 571-272-4549.

All other inquiries concerning the examination or status of the application is accessible in the PAIR system at http://www.uspto.gov/ebc.index.html.

This application will be forwarded to the examiner for action on the merits commensurate with this decision once this application's formality reviews have been completed.

Lee W. Young
TQAS, Technology Center 2800 – Semiconductors
Electrical & Optical Systems & Components

UNITED STATES PATENT AND TRADEMARK OFFICE

UNITED STATES DEPARTMENT OF COMMERCE
United States Patent and Trademark Office
Address: COMMISSIONER FOR PATENTS
P.O. Box 1450
Alexandria, Virginia 22313-1450
www.uspto.gov

APPLICATION NO.	FILING DATE	FIRST NAMED INVENTOR	ATTORNEY DOCKET NO.	CONFIRMATION NO.
12/865,387	07/29/2010	Peter James Duffett-Smith	57365	2580

99352 7590 11/15/2011
Roylance, Abrams, Berdo and Goodman, L.L.P.
1300 19th Street N.W.
Suite 600
washington, DC 20036-1649

EXAMINER
NGUYEN, NGA X

ART UNIT	PAPER NUMBER
3662	

MAIL DATE	DELIVERY MODE
11/15/2011	PAPER

Please find below and/or attached an Office communication concerning this application or proceeding.

The time period for reply, if any, is set in the attached communication.

UNITED STATES PATENT AND TRADEMARK OFFICE

Commissioner for Patents
United States Patent and Trademark Office
P.O. Box 1450
Alexandria, VA 22313-1450
www.uspto.gov

NOV 15 2011

Roylance, Abrams, Berdo and Goodman, L.L.P.
1300 19th Street N.W.
Suite 600
washington DC 20036-1649

In re application of Duffett-Smith et al. Application No. 12/865,387 Filed: July 29, 2010 For: PROCESSING RECEIVED SATELLITE RADIO SIGNALS	:	**DECISION ON REQUEST TO PARTICIPATE IN PATENT PROSECUTION HIGHWAY PROGRAM AND PETITION TO MAKE SPECIAL UNDER 37 CFR 1.102(a)**

This is a decision on the renewed request to participate in the Patent Prosecution Highway (PPH) program and the petition under 37 CFR 1.102(a), filed July 29, 2010 to make the above-identified application special.

The request and petition are **GRANTED**.

A grantable request to participate in the PPH program and petition to make special require:

(1) The U.S. application must disclose an eligible relationship to one or more PCT applications filed in the EPO or USPTO;
(2) Applicant must submit a copy of the allowable/patentable claim(s) from the PCT application(s) latest international work product (the written opinion or the IPER) along with an English translation thereof and a statement that the English translation is accurate;
(3) All the claims in the U.S. application must sufficiently correspond or be amended to sufficiently correspond to the allowable/patentable claim(s) in the PCT application(s);
(4) Examination of the U.S. application has not begun;
(5) Applicant must submit a copy of the latest international work product from the PCT application containing the allowable/patentable claim(s) along with an English translation thereof and a statement that the English translation is accurate;
(6) Applicant must submit an IDS listing the documents cited by the PCT examiner in the international work product along with copies of documents except U.S. patents or U.S. patent application publications.

The request to participate in the PPH pilot program complies with the above requirements. Therefore, the above-identified application has been accorded "special" status.

All other inquiries concerning the examination or status of the application should be directed to the Patent Application Information Retrieval (PAIR) system.

The application is being forwarded to the examiner for action on the merits commensurate with this decision.

Any inquiry regarding this decision should be directed to Mikado Buiz, Quality Assurance Specialist, at (571) 272-6578.

/ Mikado Buiz /

Mikado Buiz,
Quality Assurance Specialist
Technology Center 3600

MB/MB: 11/14/11

PTO/SB/20PCT-JP (05-10)
Approved for use through 01/31/2012. OMB 0651-0058
U.S. Patent and Trademark Office; U. S. DEPARTMENT OF COMMERCE
Under the Paperwork Reduction Act of 1995, no persons are required to respond to a collection of information unless it displays a valid OMB control number.

REQUEST FOR PARTICIPATION IN THE PATENT COOPERATION TREATY - PATENT PROSECUTION HIGHWAY (PCT-PPH) PILOT PROGRAM BETWEEN THE JAPAN PATENT OFFICE (JPO) AND THE USPTO

Application No:	12/865,422	Filing date:	07/30/2010
First Named Inventor:	Tsuneo SUZUKI		
Title of the Invention:	Window Glass Breakage Detector and Breakage Detecting Apparatus		

THIS REQUEST FOR PARTICIPATION IN THE PCT-PPH PILOT PROGRAM ALONG WITH THE REQUIRED DOCUMENTS MUST BE SUBMITTED VIA EFS-WEB. INFORMATION REGARDING EFS-WEB IS AVAILABLE AT HTTP://WWW.USPTO.GOV/EBC/EFS_HELP.HTML

APPLICANT HEREBY REQUESTS PARTICIPATION IN THE PCT-PPH PROGRAM AND PETITIONS TO MAKE THE ABOVE-IDENTIFIED APPLICATION SPECIAL UNDER THE PCT-PPH PROGRAM.

The above-identified application is (1) a national stage entry of the corresponding PCT application, or (2) a national stage entry of another PCT application which claims priority to the corresponding PCT application, or (3) a national application that claims domestic/ foreign priority to the corresponding PCT application, or (4) a national application which forms the basis for the priority claim in the corresponding PCT application, or (5) a continuing application of a U.S. application that satisfies one of (1) to (4) above, or (6) a U.S. application that claims domestic benefit to a U.S. provisional application which forms the basis for the priority claim in the corresponding PCT application.

The corresponding PCT application number(s) is/are: PCT/JP2009/052972

The international date of the corresponding PCT application(s) is/are: 02/20/2009

I. List of Required Documents:

a. **A copy of the latest international work product (WO/ISA, WO/IPEA, or IPER) in the above–identified corresponding PCT application(s)**

☑ Is attached.

☐ Is not attached because the document is already in the U.S. application.

b. **A copy of all claims which were indicated as having novelty, inventive step and industrial applicability in the above-identified corresponding PCT application(s).**

☑ Is attached.

☐ Is not attached because the document is already in the U.S. application.

c. **English translations of the documents in a. and b. above are attached (if the documents are not in the English language). A statement that the English translation is accurate is attached for the document in b. above.**

This collection of information is required by 35 U.S.C. 119, 37 CFR 1.55, and 37 CFR 1.102(d). The information is required to obtain or retain a benefit by the public, which is to file (and by the USPTO to process) an application. Confidentiality is governed by 35 U.S.C. 122 and 37 CFR 1.11 and 1.14. This collection is estimated to take 2 hours to complete, including gathering, preparing, and submitting the completed application form to the USPTO. Time will vary depending upon the individual case. Any comments on the amount of time you require to complete this form and/or suggestions for reducing this burden should be sent to the Chief Information Officer, U.S. Patent and Trademark Office, U.S. Department of Commerce, P.O. Box 1450, Alexandria, VA 22313-1450. DO NOT SEND FEES OR COMPLETED FORMS TO THIS ADDRESS.

Approved for use through 01/31/2012. OMB 0651-0058
U.S.Patent and Trademark Office; U.S. DEPARTMENT OF COMMERCE

Under the Paperwork Reduction Act of 1995, no persons are required to respond to a collection of information unless it displays a valid OMB control number.

REQUEST FOR PARTICIPATION IN THE PCT-PPH PILOT PROGRAM BETWEEN THE JPO AND THE USPTO

(continued)

Application No.:	12/865,422
First Named Inventor:	Tsuneo SUZUKI

d. **(1) An information disclosure statement listing the documents cited in the international work products (ISR, WO/ISA, WO/IPEA, IPER) of the corresponding PCT application.**

☑ Is attached

☑ Has already been filed in the above-identified U.S. application on 10/29/2010

(2) Copies of all documents (except) for U.S. patents or U.S. patent application publications)

☐ Are attached.

☑ Have already been filed in the above-identified U.S. application on 10/29/2010

II. Claims Correspondence Table:

Claims in US Application	Patentable Claims in the corresponding PCT Application	Explanation regarding the correspondence
1	1	
2	2	
3	3	Claims 1-10 in the U.S. Application are based upon and sufficiently
4	4	correspond to the similarly numbered claims which were indicated
5	5	as having novelty, inventive step and industrial applicability in the
6	6	above-identified corresponding PCT application except for
7	7	changes to eliminate multiple claim dependency, to improve clarity,
8	8	grammar and syntax, as well as to eliminate language informalities.
9	9	
10	10	

III. All the claims in the US application sufficiently correspond to the patentable claims in the corresponding PCT application.

Signature		**Steven B. Pollicoff**	Date 12/12/2011
Name (Print/Typed) for:	Bruce H. Bernstein	**Reg. No. 60,311**	Registration Number 29,027

UNITED STATES PATENT AND TRADEMARK OFFICE

Commissioner for Patents
United States Patent and Trademark Office
P.O. Box 1450
Alexandria, VA 22313-1450
www.uspto.gov

MAILED
APR 06 2012
OFFICE OF PETITIONS

GREENBLUM & BERNSTEIN, P.L.C.
1950 ROLAND CLARKE PLACE
RESTON VA 20191

In re Application of
Tsuneo Suzuki, et al.
Application No.: 12/865,422
Filed: July 30, 2010
Attorney Docket No.: P38687
For: WINDOW GLASS BREAKAGE DETECTOR AND BREAKAGE DETECTING APPARATUS

: DECISION ON REQUEST TO
: PARTICIPATE IN THE PATENT
: PROSECUTION HIGHWAY
: PROGRAM AND PETITION
: TO MAKE SPECIAL UNDER
: 37 CFR 1.102(a)

This is a decision on the request to participate in the PCT Patent Prosecution Highway (PCT-PPH) pilot program and the petition under 37 CFR 1.102(a), filed on December 16, 2011, to make the above-identified application special.

The request and petition are **DISMISSED**.

Discussion

A grantable request to participate in the PCT-PPH pilot program and petition to make special require:

(1) The U.S. application must have an eligible relationship to one or more PCT applications where the ISA or IPEA are the JPO, EPO, KIPO, IPAU, Russia, Spain, Finland, Austria, or USPTO;

(2) At least one claim in the PCT application has novelty, inventive step, and industrial applicability and must be free of any observations in Box VIII in the latest work product in the international stage or applicant must identify and explain why the claim(s) is/are not subject to the observation in Box VIII;

(3) Applicant must submit a copy of the claim(s) from the PCT application(s) that have novelty, inventive step, and industrial applicability along with an English translation thereof and a statement that the English translation is accurate, if the claims are not in the English language;

(4) All the claims in the U.S. application must sufficiently correspond or be amended to sufficiently correspond to the claim(s) that have novelty, inventive step, and industrial applicability in the PCT application(s);

(5) Examination of the U.S. application has not begun;

(6) Applicant must submit a copy of the latest international work product from the PCT application indicating that the claim(s) have novelty, inventive step, and industrial applicability along with an English translation thereof.

(7) Applicant must submit an IDS listing the documents cited by the PCT examiner in the international work product along with copies of documents except U.S. patents or U.S. patent application publications.

(8) Applicant is required to submit a claims correspondence table in English which indicates how all the claims in the U.S. application correspond to the claims indicated as having novelty, inventive step and industrial applicability in the latest international work product.

Requirements (1-2), and (4-8), above are considered to have been met. However, the request to participate in the PPH pilot program and petition fail to meet requirement (3).

Regarding requirement (3), applicant has failed to submit a copy of the claim(s) from the PCT application(s) that have novelty, inventive step, and industrial applicability along with an English translation thereof and a statement that the English translation is accurate, if the claims are not in the English language.

Applicant is given **ONE** opportunity within a time period of **ONE MONTH or THIRTY DAYS**, whichever is longer, from the mailing date of this decision to correct the deficiencies. **NO EXTENSION OF TIME UNDER 37 CFR 1.136 IS PERMITTED.** If the deficiencies are not corrected with the time period given, the application will await action in its regular turn.

Response must be filed via the Electronic Filing System (EFS) using the document description: Petition to make special under PCT – Patent Pros Hwy. Any preliminary amendments and IDS submitted with the PPH documents must be separately indexed as a preliminary amendment and IDS, respectively.

Telephone inquiries concerning this decision should be directed to Terri Johnson (571) 272-2991.

All other inquiries concerning the examination or status of the application is accessible in the PAIR system at http://www.uspto.gov/ebc/index.html.

David Bucci
Petitions Examiner
Office of Petitions

UNITED STATES PATENT AND TRADEMARK OFFICE

COMMISSIONER FOR PATENTS
UNITED STATES PATENT AND TRADEMARK OFFICE
P.O. BOX 1450
ALEXANDRIA, VA 22313-1450
www.uspto.gov

VOLVO TECHNOLOGY OF AMERICA, CORPORATE PATENTS
7825 NATIONAL SERVICE ROAD
MAIL STOP, AP1/3-41
GREENSBORO, NC 27409

MAILED
OCT 27 2010
PCT LEGAL ADMINISTRATION

In re Application of BURCHETT	:	
U.S. Application No.: 12/865,428	:	
PCT Application No.: PCT/US2008/001204	:	
Int. Filing Date: 30 January 2008	:	DECISION
Priority Date Claimed: none	:	
Attorney Docket No.: P21254US	:	
For: TRACTOR TRAILER GAP CONTROL SYSTEM	:	

This is in response to applicant's petition under 37 CFR 1.497(d) filed 09 August 2010.

BACKGROUND

On 30 January 2008, applicant filed international application PCT/US2008/001204. The thirty-month period for paying the basic national fee in the United States expired on 30 July 2010.

On 30 July 2010, applicant filed national stage papers in the United States Designated/Elected Office (DO/EO/US). The submission was accompanied by, *inter alia*, the basic national fee required by 35 U.S.C. 371(c)(1).

On 09 August 2010, applicant filed the present petition under 37 CFR 1.497(d).

DISCUSSION

The petition states that Arthur Fowler should be added as an inventor.

37 CFR 1.497(d) states,

> If the oath or declaration filed pursuant to 35 U.S.C. 371(c)(4) and this section names an inventive entity different from the inventive entity set forth in the international application, or if a change to the inventive entity has been

effected under PCT Rule 92bis subsequent to the execution of any oath or declaration which was filed in the application under PCT Rule 4.17(iv) or this section and the inventive entity thus changed is different from the inventive entity identified in any such oath or declaration, applicant must submit:

(1) A statement from each person being added as an inventor and from each person being deleted as an inventor that any error in inventorship in the international application occurred without deceptive intention on his or her part;

(2) The processing fee set forth in § 1.17(i); and

(3) If an assignment has been executed by any of the original named inventors, the written consent of the assignee (see § 3.73(b) of this chapter); and

(4) Any new oath or declaration required by paragraph (f) of this section.

With regard to item (1) above, the requisite statement has been provided.

With regard to item (2) above, the requisite processing fee has been provided.

With regard to item (3) above, the petition fails to affirmatively state that the application has not been assigned by any of the original named inventors.

With regard to item (4) above, a new declaration under 37 CFR 1.497(f) is not required.

CONCLUSION

For the reasons above, the petition under 37 CFR 1.497(d) is DISMISSED without prejudice.

If reconsideration on the merits of the petition is desired, a proper response must be filed within TWO (2) MONTHS from the mail date of this decision. Failure to timely file a proper response will result in ABANDONMENT of the application. Extensions of time are available under 37 CFR 1.136(a). Any reconsideration request should include a cover letter entitled "Renewed Petition Under 37 CFR 1.497(d)".

Any further correspondence with respect to this matter may be filed electronically via EFS-Web selecting the document description "Petition for review and processing by the PCT Legal Office" or by mail addressed to Mail Stop PCT, Commissioner for Patents, Office of PCT Legal Administration, P.O. Box 1450, Alexandria, Virginia 22313-1450, with the contents of the letter marked to the attention of the Office of PCT Legal Administration.

Bryan Lin

Bryan Lin
PCT Legal Examiner
PCT Legal Office

Telephone: 571-272-3303
Facsimile: 571-273-0459

UNITED STATES PATENT AND TRADEMARK OFFICE

COMMISSIONER FOR PATENTS
UNITED STATES PATENT AND TRADEMARK OFFICE
P.O. BOX 1450
ALEXANDRIA, VA 22313-1450
www.uspto.gov

VOLVO TECHNOLOGY OF AMERICA, CORPORATE PATENTS
7825 NATIONAL SERVICE ROAD
MAIL STOP, AP1/3-41
GREENSBORO, NC 27409

MAILED
MAR 11 2011
PCT LEGAL ADMINISTRATION

In re Application of BURCHETT	:	
U.S. Application No.: 12/865,428	:	
PCT Application No.: PCT/US2008/001204	:	
Int. Filing Date: 30 January 2008	:	DECISION
Priority Date Claimed: none	:	
Attorney Docket No.: P21254US	:	
For: TRACTOR TRAILER GAP CONTROL SYSTEM	:	

This is in response to applicant's renewed petition under 37 CFR 1.497(d) filed 27 January 2011.

BACKGROUND

On 30 January 2008, applicant filed international application PCT/US2008/001204. The thirty-month period for paying the basic national fee in the United States expired on 30 July 2010.

On 30 July 2010, applicant filed national stage papers in the United States Designated/Elected Office (DO/EO/US). The submission was accompanied by, *inter alia*, the basic national fee required by 35 U.S.C. 371(c)(1).

On 09 August 2010, applicant filed a petition under 37 CFR 1.497(d).

On 27 October 2010, this Office mailed a decision dismissing the 09 August 2010 petition.

On 27 January 2011, applicant filed the instant renewed petition under 37 CFR 1.497(d).

DISCUSSION

The petition states that Arthur Fowler should be added as an inventor.

37 CFR 1.497(d) states,

> If the oath or declaration filed pursuant to 35 U.S.C. 371(c)(4) and this section names an inventive entity different from the inventive entity set forth in the international application, or if a change to the inventive entity has been effected under PCT Rule 92bis subsequent to the execution of any oath or declaration which was filed in the application under PCT Rule 4.17(iv) or this section and the inventive entity thus changed is different from the inventive entity identified in any such oath or declaration, applicant must submit:
>
> (1) A statement from each person being added as an inventor and from each person being deleted as an inventor that any error in inventorship in the international application occurred without deceptive intention on his or her part;
>
> (2) The processing fee set forth in § 1.17(i); and
>
> (3) If an assignment has been executed by any of the original named inventors, the written consent of the assignee (see § 3.73(b) of this chapter); and
>
> (4) Any new oath or declaration required by paragraph (f) of this section.

Applicant previously satisfied items (1), (2), and (4) above.

With regard to item (3) above, written consent of the assignee Volvo Group North America, L.L.C. has not been provided.

CONCLUSION

For the reasons above, the renewed petition under 37 CFR 1.497(d) is DISMISSED without prejudice.

If reconsideration on the merits of the petition is desired, a proper response must be filed within TWO (2) MONTHS from the mail date of this decision. Failure to timely file a proper response will result in ABANDONMENT of the application. Extensions of time are available under 37 CFR 1.136(a). Any reconsideration request should include a cover letter entitled "Renewed Petition Under 37 CFR 1.497(d)".

Any further correspondence with respect to this matter may be filed electronically via EFS-Web selecting the document description "Petition for review and processing by the PCT Legal Office" or by mail addressed to Mail Stop PCT, Commissioner for Patents, Office of PCT Legal Administration, P.O. Box 1450, Alexandria, Virginia 22313-1450, with the contents of the letter marked to the attention of the Office of PCT Legal Administration.

Bryan Lin
PCT Legal Examiner
PCT Legal Office

Telephone: 571-272-3303
Facsimile: 571-273-0459

UNITED STATES PATENT AND TRADEMARK OFFICE

COMMISSIONER FOR PATENTS
UNITED STATES PATENT AND TRADEMARK OFFICE
P.O. BOX 1450
ALEXANDRIA, VA 22313-1450
www.uspto.gov

VOLVO TECHNOLOGY OF AMERICA, CORPORATE PATENTS
7825 NATIONAL SERVICE ROAD
MAIL STOP, AP1/3-41
GREENSBORO, NC 27409

MAILED

AUG 09 2011

PCT LEGAL ADMINISTRATION

In re Application of BURCHETT	:	
U.S. Application No.: 12/865,428	:	
PCT Application No.: PCT/US2008/001204	:	
Int. Filing Date: 30 January 2008	:	DECISION
Priority Date Claimed: none	:	
Attorney Docket No.: P21254US	:	
For: TRACTOR TRAILER GAP CONTROL	:	
SYSTEM	:	

This is in response to applicant's renewed petition under 37 CFR 1.497(d) filed 07 June 2011.

BACKGROUND

On 30 January 2008, applicant filed international application PCT/US2008/001204. The thirty-month period for paying the basic national fee in the United States expired on 30 July 2010.

On 30 July 2010, applicant filed national stage papers in the United States Designated/Elected Office (DO/EO/US). The submission was accompanied by, *inter alia*, the basic national fee required by 35 U.S.C. 371(c)(1).

On 09 August 2010, applicant filed a petition under 37 CFR 1.497(d).

On 27 October 2010, this Office mailed a decision dismissing the 09 August 2010 petition.

On 27 January 2011, applicant filed a renewed petition under 37 CFR 1.497(d).

On 11 March 2011, this Office mailed a decision dismissing the 27 January 2011 petition.

On 07 June 2011, applicant filed the instant renewed petition under 37 CFR 1.497(d).

DISCUSSION

The petition states that Arthur Fowler should be added as an inventor.

37 CFR 1.497(d) states,

> If the oath or declaration filed pursuant to 35 U.S.C. 371(c)(4) and this section names an inventive entity different from the inventive entity set forth in the international application, or if a change to the inventive entity has been effected under PCT Rule 92bis subsequent to the execution of any oath or declaration which was filed in the application under PCT Rule 4.17(iv) or this section and the inventive entity thus changed is different from the inventive entity identified in any such oath or declaration, applicant must submit:
>
> (1) A statement from each person being added as an inventor and from each person being deleted as an inventor that any error in inventorship in the international application occurred without deceptive intention on his or her part;
>
> (2) The processing fee set forth in § 1.17(i); and
>
> (3) If an assignment has been executed by any of the original named inventors, the written consent of the assignee (see § 3.73(b) of this chapter); and
>
> (4) Any new oath or declaration required by paragraph (f) of this section.

Applicant previously satisfied items (1), (2), and (4) above.

With regard to item (3) above, written consent of the assignee Volvo Group North America, L.L.C. has been provided.

CONCLUSION

For the reasons above, the renewed petition under 37 CFR 1.497(d) is GRANTED.

The application has an International Filing Date under 35 U.S.C. 363 of 30 January 2008, and a date under 35 U.S.C. 371(c)(1), (c)(2), and (c)(4) of 09 August 2010.

This application is being forwarded to the United States Designated/Elected Office (DO/EO/US) for further processing in accordance with this decision.

BryanLin

Bryan Lin
PCT Legal Examiner
PCT Legal Office

Telephone: 571-272-3303
Facsimile: 571-273-0459

UNITED STATES PATENT AND TRADEMARK OFFICE

COMMISSIONER FOR PATENTS
UNITED STATES PATENT AND TRADEMARK OFFICE
P.O. BOX 1450
ALEXANDRIA, VA 22313-1450
www.uspto.gov

LANXESS CORPORATION
111 RIDC PARK WEST DRIVE
PITTSBURGH, PA 15275-1112

MAILED
JUN 23 2011
PCT LEGAL ADMINISTRATION

In re Application of LAUFER et al
U.S. Application No.: 12/865,458
PCT Application No.: PCT/EP2009/051323
Int. Filing Date: 05 February 2009
Priority Date Claimed: 08 February 2008
Attorney Docket No.: P007 00003
For: METHOD FOR PRODUCING LACTAMATES BY WAY OF THIN FILM EVAPORATION

DECISION

This is in response to applicant's petition under 37 CFR 1.497(d) filed 28 April 2011.

BACKGROUND

On 05 February 2009, applicant filed international application PCT/EP2009/051323, which claimed priority of an earlier Germany application filed 08 February 2008. A copy of the international application was communicated to the USPTO from the International Bureau on 13 August 2009. The thirty-month period for paying the basic national fee in the United States expired on 09 August 2010.

On 30 July 2010, applicant filed national stage papers in the United States Designated/Elected Office (DO/EO/US). The submission was accompanied by, *inter alia*, the basic national fee required by 35 U.S.C. 371(c)(1).

On 15 September 2010, the DO/EO/US mailed a Notification of Missing Requirements Under 35 U.S.C. 371 (Form PCT/DO/EO/905), which indicated that an oath or declaration in compliance with 37 CFR 1.497 must be filed.

On 15 April 2011, applicant filed executed declarations.

On 19 April 2011, the DO/EO/US mailed a Notification of Defective Response (Form PCT/DO/EO/916), which identified a discrepancy with regard to the inventive entity.

On 28 April 2011, applicant filed the present petition under 37 CFR 1.497(d).

DISCUSSION

The petition states that Bernd Kray and Michael Wuehr should be added as inventors.

37 CFR 1.497(d) states,

> If the oath or declaration filed pursuant to 35 U.S.C. 371(c)(4) and this section names an inventive entity different from the inventive entity set forth in the international application, or if a change to the inventive entity has been effected under PCT Rule 92bis subsequent to the execution of any oath or declaration which was filed in the application under PCT Rule 4.17(iv) or this section and the inventive entity thus changed is different from the inventive entity identified in any such oath or declaration, applicant must submit:
>
> (1) A statement from each person being added as an inventor and from each person being deleted as an inventor that any error in inventorship in the international application occurred without deceptive intention on his or her part;
>
> (2) The processing fee set forth in § 1.17(i); and
>
> (3) If an assignment has been executed by any of the original named inventors, the written consent of the assignee (see § 3.73(b) of this chapter); and
>
> (4) Any new oath or declaration required by paragraph (f) of this section.

With regard to item (1) above, the requisite statements have been provided.

With regard to item (2) above, the requisite processing fee has been provided.

With regard to item (3) above, MPEP 201.03, Section II. D., states in relevant part, "Where no assignee exists requester should affirmatively state that fact. If the file record including the request is silent as to the existence of an assignee it will be presumed that no assignee exists. Such presumption should be set forth in the decision to alert requesters to the requirement." In the present case, although the petition fails to affirmatively state that the application has not been assigned by any of the original named inventors, because a corporate applicant is listed on the international application, it will not be presumed that no assignee exists. Thus, applicant must either provide the written consent of any assignee or affirmatively state that no assignment has been executed by any of the originally named inventors.

With regard to item (4) above, a new declaration under 37 CFR 1.497(f) is not required.

CONCLUSION

For the reasons above, the petition under 37 CFR 1.497(d) is DISMISSED without prejudice.

If reconsideration on the merits of the petition is desired, a proper response must be filed within TWO (2) MONTHS from the mail date of this decision. Failure to timely file a proper response will result in ABANDONMENT of the application. Extensions of time are

available under 37 CFR 1.136(a). Any reconsideration request should include a cover letter entitled "Renewed Petition Under 37 CFR 1.497(d)". No additional petition fee is required.

Any further correspondence with respect to this matter may be filed electronically via EFS-Web selecting the document description "Petition for review and processing by the PCT Legal Office" or by mail addressed to Mail Stop PCT, Commissioner for Patents, Office of PCT Legal Administration, P.O. Box 1450, Alexandria, Virginia 22313-1450, with the contents of the letter marked to the attention of the Office of PCT Legal Administration.

Bryan Lin

Bryan Lin
PCT Legal Examiner
PCT Legal Office

Telephone: 571-272-3303
Facsimile: 571-273-0459

UNITED STATES PATENT AND TRADEMARK OFFICE

Commissioner for Patents
United States Patent and Trademark Office
P.O. Box 1450
Alexandria, VA 22313-1450
www.uspto.gov

LANXESS CORPORATION
111 RIDC PARK WEST DRIVE
PITTSBURGH, PA 15275-1112

MAILED
SEP 20 2011
PCT LEGAL ADMINISTRATION

In re Application of LAUFER et al	:	
U.S. Application No.: 12/865,458	:	
PCT Application No.: PCT/EP2009/051323	:	
Int. Filing Date: 05 February 2009	:	
Priority Date Claimed: 08 February 2008	:	DECISION
Attorney Docket No.: P007 00003	:	
For: METHOD FOR PRODUCING	:	
LACTAMATES BY WAY OF THIN FILM	:	
EVAPORATION	:	

This is in response to applicant's renewed petition under 37 CFR 1.497(d) filed 15 July 2011.

BACKGROUND

On 05 February 2009, applicant filed international application PCT/EP2009/051323, which claimed priority of an earlier Germany application filed 08 February 2008. A copy of the international application was communicated to the USPTO from the International Bureau on 13 August 2009. The thirty-month period for paying the basic national fee in the United States expired on 09 August 2010.

On 30 July 2010, applicant filed national stage papers in the United States Designated/Elected Office (DO/EO/US). The submission was accompanied by, *inter alia*, the basic national fee required by 35 U.S.C. 371(c)(1).

On 15 September 2010, the DO/EO/US mailed a Notification of Missing Requirements Under 35 U.S.C. 371 (Form PCT/DO/EO/905), which indicated that an oath or declaration in compliance with 37 CFR 1.497 must be filed.

On 15 April 2011, applicant filed executed declarations.

On 19 April 2011, the DO/EO/US mailed a Notification of Defective Response (Form PCT/DO/EO/916), which identified a discrepancy with regard to the inventive entity.

On 28 April 2011, applicant filed a petition under 37 CFR 1.497(d).

On 23 June 2011, this Office mailed a decision dismissing the 28 April 2011 petition.

On 15 July 2011, applicant filed the instant renewed petition under 37 CFR 1.497(d).

DISCUSSION

The petition states that Bernd Kray and Michael Wuehr should be added as inventors.

37 CFR 1.497(d) states,

> If the oath or declaration filed pursuant to 35 U.S.C. 371(c)(4) and this section names an inventive entity different from the inventive entity set forth in the international application, or if a change to the inventive entity has been effected under PCT Rule 92bis subsequent to the execution of any oath or declaration which was filed in the application under PCT Rule 4.17(iv) or this section and the inventive entity thus changed is different from the inventive entity identified in any such oath or declaration, applicant must submit:
>
> (1) A statement from each person being added as an inventor and from each person being deleted as an inventor that any error in inventorship in the international application occurred without deceptive intention on his or her part;
>
> (2) The processing fee set forth in § 1.17(i); and
>
> (3) If an assignment has been executed by any of the original named inventors, the written consent of the assignee (see § 3.73(b) of this chapter); and
>
> (4) Any new oath or declaration required by paragraph (f) of this section.

With regard to item (1) above, the requisite statements have been provided.

With regard to item (2) above, the requisite processing fee has been provided.

With regard to item (3) above, although written consent of the purported assignee has been provided, the assignee has not established the right to take action in compliance with 37 CFR 3.73(b). In this regard, although the petition states that a copy of an assignment agreement is attached, such copy is not present in the application file and is not listed in the Electronic Acknowledgement Receipt.

With regard to item (4) above, a new declaration under 37 CFR 1.497(f) is not required.

CONCLUSION

For the reasons above, the renewed petition under 37 CFR 1.497(d) is DISMISSED without prejudice.

If reconsideration on the merits of the petition is desired, a proper response must be filed within TWO (2) MONTHS from the mail date of this decision. Failure to timely file a proper response will result in ABANDONMENT of the application. Extensions of time are available under 37 CFR 1.136(a). Any reconsideration request should include a cover letter entitled "Renewed Petition Under 37 CFR 1.497(d)". No additional petition fee is required.

Any further correspondence with respect to this matter may be filed electronically via EFS-Web selecting the document description "Petition for review and processing by the PCT Legal Office" or by mail addressed to Mail Stop PCT, Commissioner for Patents, Office of PCT Legal Administration, P.O. Box 1450, Alexandria, Virginia 22313-1450, with the contents of the letter marked to the attention of the Office of PCT Legal Administration.

Bryan Lin
PCT Legal Examiner
PCT Legal Office

Telephone: 571-272-3303
Facsimile: 571-273-0459

UNITED STATES PATENT AND TRADEMARK OFFICE

Commissioner for Patents
United States Patent and Trademark Office
P.O. Box 1450
Alexandria, VA 22313-1450
www.uspto.gov

LANXESS CORPORATION
111 RIDC PARK WEST DRIVE
PITTSBURGH, PA 15275-1112

MAILED
DEC 05 2011
PCT LEGAL ADMINISTRATION

In re Application of LAUFER et al	:	
U.S. Application No.: 12/865,458	:	
PCT Application No.: PCT/EP2009/051323	:	
Int. Filing Date: 05 February 2009	:	
Priority Date Claimed: 08 February 2008	:	DECISION
Attorney Docket No.: P007 00003	:	
For: METHOD FOR PRODUCING	:	
LACTAMATES BY WAY OF THIN FILM	:	
EVAPORATION	:	

This is in response to applicant's renewed petition under 37 CFR 1.497(d) filed 03 November 2011.

BACKGROUND

On 05 February 2009, applicant filed international application PCT/EP2009/051323, which claimed priority of an earlier Germany application filed 08 February 2008. A copy of the international application was communicated to the USPTO from the International Bureau on 13 August 2009. The thirty-month period for paying the basic national fee in the United States expired on 09 August 2010.

On 30 July 2010, applicant filed national stage papers in the United States Designated/Elected Office (DO/EO/US). The submission was accompanied by, *inter alia*, the basic national fee required by 35 U.S.C. 371(c)(1).

On 15 September 2010, the DO/EO/US mailed a Notification of Missing Requirements Under 35 U.S.C. 371 (Form PCT/DO/EO/905), which indicated that an oath or declaration in compliance with 37 CFR 1.497 must be filed.

On 15 April 2011, applicant filed executed declarations.

On 19 April 2011, the DO/EO/US mailed a Notification of Defective Response (Form PCT/DO/EO/916), which identified a discrepancy with regard to the inventive entity.

On 28 April 2011, applicant filed a petition under 37 CFR 1.497(d).

On 23 June 2011, this Office mailed a decision dismissing the 28 April 2011 petition.

On 15 July 2011, applicant filed a renewed petition under 37 CFR 1.497(d).

On 20 September 2011, this Office mailed a decision dismissing the 15 July 2011 petition.

On 03 November 2011, applicant filed the instant renewed petition under 37 CFR 1.497(d).

DISCUSSION

The petition states that Bernd Kray and Michael Wuehr should be added as inventors.

37 CFR 1.497(d) states,

> If the oath or declaration filed pursuant to 35 U.S.C. 371(c)(4) and this section names an inventive entity different from the inventive entity set forth in the international application, or if a change to the inventive entity has been effected under PCT Rule 92bis subsequent to the execution of any oath or declaration which was filed in the application under PCT Rule 4.17(iv) or this section and the inventive entity thus changed is different from the inventive entity identified in any such oath or declaration, applicant must submit:
>
> (1) A statement from each person being added as an inventor and from each person being deleted as an inventor that any error in inventorship in the international application occurred without deceptive intention on his or her part;
>
> (2) The processing fee set forth in § 1.17(i); and
>
> (3) If an assignment has been executed by any of the original named inventors, the written consent of the assignee (see § 3.73(b) of this chapter); and
>
> (4) Any new oath or declaration required by paragraph (f) of this section.

With regard to item (1) above, the requisite statements have been provided.

With regard to item (2) above, the requisite processing fee has been provided.

With regard to item (3) above, written consent of the purported assignee has been provided. The assignee has not established the right to take action in compliance with 37 CFR 3.73(b).

With regard to item (4) above, a new declaration under 37 CFR 1.497(f) is not required.

CONCLUSION

For the reasons above, the renewed petition under 37 CFR 1.497(d) is GRANTED.

The application has an International Filing Date under 35 U.S.C. 363 of 05 February 2009, and a date under 35 U.S.C. 371(c)(1), (c)(2), and (c)(4) of 15 April 2011.

This application is being forwarded to the United States Designated/Elected Office (DO/EO/US) for further processing in accordance with this decision.

Bryan Lin

Bryan Lin
PCT Legal Examiner
PCT Legal Office

Telephone: 571-272-3303
Facsimile: 571-273-0459

UNITED STATES PATENT AND TRADEMARK OFFICE

COMMISSIONER FOR PATENTS
UNITED STATES PATENT AND TRADEMARK OFFICE
P.O. BOX 1450
ALEXANDRIA, VA 22313-1450
www.uspto.gov

01 OCT 2010

SIEMENS CORPORATION
INTELLECTUAL PROPERTY DEPARTMENT
170 WOOD AVENUE SOUTH
ISELIN, NJ 08830

In re Application of PRONKINE	:	
U.S. Application No.: 12/865,468	:	
PCT Application No.: PCT/US2009/032104	:	
Int. Filing Date: 27 January 2009	:	DECISION
Priority Date Claimed: 28 January 2008	:	
Attorney Docket No.: 2008P01674WOUS	:	
For: METHOD AND APPARATUS FOR AUXILIARY ILLUMINATION FOR DETECTING AN OBJECT	:	

This is in response to applicant's "Petition for Revival of an International Application for Patent Designating the U.S. Abandoned Unintentionally Under 37 CFR 1.137(b)" filed 30 July 2010.

BACKGROUND

On 27 January 2009, applicant filed international application PCT/US2009/032104, which claimed priority of an earlier United States application filed 28 January 2008. The thirty-month period for paying the basic national fee in the United States expired on 28 July 2010.

On 29 July 2010, international application PCT/US2009/032104 became abandoned as to the United States for failure to timely pay the basic national fee.

On 30 July 2010, applicant filed the present petition under 37 CFR 1.137(b).

DISCUSSION

Under 37 CFR 1.137(b), a petition requesting that an application be revived on the grounds of unintentional abandonment must be accompanied by: (1) the required reply unless previously filed, (2) the petition fee as set forth in 37 CFR 1.17(m), (3) a statement that the entire delay in filing the required reply from the due date for the reply until the filing of a grantable petition was unintentional, and (4) a terminal disclaimer if the application was filed before 08 June 1995.

With regard to item (1), applicant has provided the required reply under 35 U.S.C. 371.

With regard to item (2), applicant has provided the required petition fee.

With regard to item (3), applicant has provided the required statement.

With regard to item (4), because the international application was filed after 08 June 1995, no terminal disclaimer is required.

CONCLUSION

For the reasons above, the petition under 37 CFR 1.137(b) is GRANTED.

The application has an International Filing Date under 35 U.S.C. 363 of 27 January 2009, and a date under 35 U.S.C. 371(c)(1), (c)(2), and (c)(4) of 30 July 2010.[1]

This application is being forwarded to the United States Designated/Elected Office (DO/EO/US) for further processing in accordance with this decision.

Bryan Lin
PCT Legal Examiner
PCT Legal Office

Telephone: 571-272-3303
Facsimile: 571-273-0459

[1] A proper declaration under PCT Rule 4.17(iv) was filed in the international application.

UNITED STATES PATENT and TRADEMARK OFFICE

COMMISSIONER FOR PATENTS
UNITED STATES PATENT AND TRADEMARK OFFICE
P.O BOX 1450
ALEXANDRIA, VA 22313-1450
www.uspto.gov

LERNER, DAVID, LITTENBERG,
KRUMHOLZ & MENTLIK
600 SOUTH AVENUE WEST
WESTFIELD NJ 07090

MAILED

JAN 13 2011

PCT LEGAL ADMINISTRATION

In re Application of	:	DECISION ON
LUDWIG et al	:	
Application No.: 12/865,481	:	
International App. No.: PCT/AT2009/000038	:	
Int. Filing Date: 30 January 2009	:	
Priority Date: 31 January 2008	:	REQUEST UNDER
Attorney's Docket No.: ABP 3.3-077	:	
For: OBSERVATION DEVICE WITH RANGE	:	
FINDER	:	37 CFR 1.497(d)

This is a decision on applicants' "STATEMENT PURSUANT TO 37 CFR 1.497(d)" filed on 17 November 2010, adding co-inventors, Andreas Zimmermann and Ludwig Pernstich in the executed declaration. The $130.00 processing fee has been charged to Deposit Account No.: 12-1095.

BACKGROUND

On 30 July 2010, applicants filed a Transmittal Letter for entry into the national stage in the United States of America. Filed with the Transmittal Letter was, inter alia, the requisite basic national fee. No executed oath or declaration was filed at such time.

On 17 September 2010, the United States Designated/Elected Office (DO/EO/US) mailed a "NOTIFICATION OF MISSING REQUIREMENTS UNDER 35 U.S.C. 371 IN THE UNITED STATES DESIGNATED/ELECTED OFFICE (DO/EO/US)" (Form PCT/DO/EO/905) which informed applicant, inter alia, that an "Oath or declaration of the inventors, in compliance with 37 CFR 1.47(a) and (b), identifying the application by International application number and international filing date" must be submitted within two (2) months from date of this Notice or by 32 months from the priority date, whichever is later, in order to avoid abandonment of the national stage application.

On 17 September 2010, applicants filed an executed declaration in response to the "Notification of Missing Requirements," and a request under 37 CFR 1.497(d).

DISCUSSION

A submission under 37 CFR 1.497(d) must include:

(1) a statement from each person being added as an inventor and from each person being deleted as an inventor that the error in inventorship occurred without deceptive intention on his or her part;
(2) the fee set forth in § 1.17(I); and
(3) If an assignment has been executed by any of the original named inventors, the written consent of the assignee (see 37 CFR §3.73(b) of this chapter).

A review of the application file reveals that applicants have satisfied items (1) - (2) under 37 CFR 1.497(d) but not item (3).

With respect to item (1), the statements submitted on 17 September 2010 of Andreas Zimmermann and Ludwig Pernstich are sufficient because the statements state that the error in inventorship occurred without a deceptive intent.

With respect to item (2), the processing fee of $130.00 has been provided by credit card.

With respect to item (3), Swarovski-Optik KG., the assignee, has not consented to the correction of inventorship to the above application. Also, to establish the right of the Assignee to take action, applicant must submit a copy of the executed assignment or specify the reel and frame number. Note MPEP 324 and 37 CFR 3.73(b).

Accordingly, the request does not meet the requirements under 37 CFR 1.497(d).

CONCLUSION

For the reasons above, the request under 37 CFR 1.497(d) is **DISMISSED** without prejudice.

If reconsideration on the merits of this petition is desired, a proper reply must be filed within TWO (2) MONTHS from the mail date of this decision. The proper reply is either a proper request under 37 CFR 1.497(d) overcoming the above stated defects. The failure to provide the proper reply will result in Abandonment of the application. Any reconsideration request should include a cover letter entitled "Renewed Request Under 37 CFR 1.497(d)". Extensions of time may be obtained under 37 CFR 1.136(a).

Any further correspondence with respect to this matter may be filed electronically via EFS-Web selecting the document description "Petition for review and processing by the PCT Legal Office" or by mail addressed to Mail Stop PCT, Commissioner for Patents, Office of PCT Legal Administration, P.O. Box 1450, Alexandria, Virginia 22313-1450, with the contents of the letter marked to the attention of the Office of PCT Legal Administration.

Rafael Bacares
PCT Legal Examiner
PCT Legal Office
Telephone: (571) 272-3276
Facsimile: (571) 273-0459

UNITED STATES PATENT and TRADEMARK OFFICE

COMMISSIONER FOR PATENTS
UNITED STATES PATENT AND TRADEMARK OFFICE
P.O BOX 1450
ALEXANDRIA, VA 22313-1450
www.uspto.gov

LERNER, DAVID, LITTENBERG,
KRUMHOLZ & MENTLIK
600 SOUTH AVENUE WEST
WESTFIELD NJ 07090

MAILED

MAY 10 2011

PCT LEGAL ADMINISTRATION

In re Application of	:	DECISION ON
LUDWIG et al	:	
Application No.: 12/865,481	:	
International App. No.: PCT/AT2009/000038	:	
Int. Filing Date: 30 January 2009	:	
Priority Date: 31 January 2008	:	REQUEST UNDER
Attorney's Docket No.: ABP 3.3-077	:	
For: OBSERVATION DEVICE WITH RANGE	:	
FINDER	:	37 CFR 1.497(d)

This is a decision on applicants' "RENEWED REQUEST UNDER 37 CFR 1.497(d)" filed on 14 March 2011.

BACKGROUND

In a decision from this Office mailed on 13 January 2011, the decision indicated that the request was dismissed because the request did not satisfy item (3) of 37 CFR 1.497(d).

On 14 March 2011, applicants filed the current renewed request.

On 25 March 2011, the United States Designated/Elected Office (DO/EO/US) prematurely mailed a "NOTICE OF ACCEPTANCE OF APPLICATION UNDER 35 U.S.C. 371 AND 37 CFR 1.495" (Form PCT/DO/EO/903), which indicated a date of receipt of 35 U.S.C. (c)(1), (c)(2), and (c)(4) of 17 November 2010.

DISCUSSION

A review of the renewed request reveals that applicants have satisfied item (3) of 37 CFR 1.497(d). In regard to item (3), the assignee, Swrovski-Optik KG, consents to the addition of Ludwig Pernstich and Andreas Zimmermann as joint-inventors to the above patent application, because Mr. Schreiter has apparent authority as a CTO to bind the assignee. The assignee has also filed the requisite papers establishing its right to take action under 37 CFR §3.73(b).

Accordingly, applicants are deemed to satisfy requirements (1), (2), and (3) under 37 CFR 1.497(d).

CONCLUSION

For the reasons above, the request under 37 CFR 1.497(d) is **GRANTED.**

This application is being returned to the United States Designated/Elected Office (DO/EO/US) for continued processing consistent with this decision.

Rafael Bacares
PCT Legal Examiner
PCT Legal Office
Telephone: (571) 272-3276
Facsimile: (571) 273-0459

UNITED STATES PATENT and TRADEMARK OFFICE

COMMISSIONER FOR PATENTS
UNITED STATES PATENT AND TRADEMARK OFFICE
P.O BOX 1450
ALEXANDRIA, VA 22313-1450
www.uspto.gov

MCCORMICK, PAULDING & HUBER LLP
CITY PLACE II
185 ASYLUM STREET
HARTFORD CT 06103

MAILED

OCT 07 2010

PCT LEGAL ADMINISTRATION

In re Application of	:	DECISION ON
KANEL et al	:	
Application No.: 12/865,501	:	
PCT No.: PCT/EP2008/060704	:	
Int. Filing Date: 14 August 2008	:	PETITION UNDER
Priority Date: 17 August 2007	:	
Attorney's Docket No.: 8123-0001WOUS	:	
For: APPARATUS AND... EPITAXIAL LAYERS	:	37 CFR 1.137(b)

This decision is in response to applicant's "PETITION FOR REVIVAL OF AN INTERNATIONAL APPLICATION FOR PATENT DESIGNATING THE U.S. ABANDONED UNINTENTIONALLY UNDER 37 C.F.R. 1.137(b)," filed on 30 July 2010.

BACKGROUND

On 14 August 2008, this international application was filed, claiming an earliest priority date of 17 August 2007.

The deadline for paying the basic national fee in the United States under 35 U.S.C. 371 and 37 CFR 1.495 was 17 February 2010. This international application became abandoned with respect to the United States at midnight on 17 February 2010 for failure to pay the required basic national fee.

On 30 July 2010, applicant filed the instant petition under 37 CFR 1.137(b) and a Transmittal letter for entry into the national stage in the United States, which was accompanied by the basic national fee, the petition fee, and an executed declaration.

DISCUSSION

A grantable petition to revive an abandoned application under 37 CFR 1.137(b) must be accompanied by (1) the required reply, unless previously filed. In a nonprovisional application abandoned for failure to prosecute, the required reply may be met by the filing of a continuing application; (2) the petition fee as set forth in § 1.17(m); and (3) a statement that the entire delay in filing the required reply from the due date for the reply until the filing of a grantable petition pursuant to this paragraph was unintentional. The Commissioner may require additional information where there is a question whether the delay was unintentional; and (4) any terminal disclaimer (and fee as set forth in § 1.20 (d)) required pursuant to paragraph (c) of this section.

Petitioner has provided: (1) the proper reply by submitting the basic national filing fee, (2) the petition fee set forth in §1.17(m) and (3) the proper statement under 137(b)(3). In this application, no terminal disclaimer is required.

Accordingly, the petition is deemed to satisfy requirements (1), (2), (3), and (4) under 37 CFR 1.137(b).

DECISION

The petition under 37 CFR 1.137(b) is **GRANTED**.

This application is being returned to the United States Designated/Elected Office (DO/EO/US) for continued processing.

Rafael Bacares
PCT Legal Examiner
PCT Legal Office
Telephone: (571) 272-3276
Facsimile: (571) 273-0459

UNITED STATES PATENT AND TRADEMARK OFFICE

Commissioner for Patents
United States Patent and Trademark Office
P.O. Box 1450
Alexandria, VA 22313-1450
www.uspto.gov

MAILED

OCT 12 2011

PCT LEGAL ADMINISTRATION

BUCHANAN, INGERSOLL & ROONEY PC
POST OFFICE BOX 1404
ALEXANDRIA VA 22313-1404

In re Application of
PEDERSEN
Application No.: 12/865,503
Filing Date: 30 July 2010
Attorney's Docket No.: 1034279-000105
For: SYSTEM, DEVICE AND METHOD FOR STABILIZING THE OPTICAL OUTPUT POWER OF AN OPTICAL SYSTEM

DECISION on PETITION

UNDER

37 CFR §§1.182 & 1.78(a)(3)

This is a decision on applicant's "Petition Under Rule 1.182" to treat the above referenced application under 35 U.S.C. 111(a). This is also a decision on applicant's "Petition Under Rule 1.78(e)", which is treated as a petition under 37 CFR 1.78(a)(3) to accept unintentionally delayed domestic priority claim under 37 CFR 1.78(a)(3) filed 14 July 2011 in the United States Patent and Trademark Office (USPTO).

Petition Under 37 CFR 1.182

Applicant's petition under 37 CFR 1.182 to treat the application papers filed on 30 July 2010 as a filing under 35 U.S.C. 111(a) is accompanied by the required petition fee.

On 30 July 2010, applicant filed a submission to enter the U.S. national phase under 35 U.S.C. 371 for international application no. PCT/DK2009/000026. The submission included a 36 page specification, including 31 claims, and 10 sheets of drawings. Applicant asserts that the application was erroneously filed as a national stage application and was intended to be filed under 35 U.S.C. 111(a) as a bypass continuation-in-part application of the international application.

Petitioner asserts that the present petition is required in order to avoid any potential loss of rights to matter included in the CIP specification that was not included in international application PCT/DK2009/000026. Petitioner notes that the CIP specification was published by the Office. Further, the application has not been examined.

In view of the above, the petition under 37 CFR 1.182 to convert the present application to a filing under 35 U.S.C. 111(a) is **GRANTED**.

Applicants are advised that a certified copy of the foreign priority application must be provided to the Office to comply with the requirements of 35 U.S.C. 119(a)-(d) and 37 CFR 1.55(a)(2). Applicants may not rely upon the certified copy furnished in the international phase of international application no. PCT/DK2009/000026 to satisfy this requirement.

Petition under 37 CFR 1.78(a)

At the time of filing the present application, applicant did not make a proper claim under 35 U.S.C. 120 and 365(c) to international application PCT/DK2009/000026. Thus, the filing of a petition under 37 CFR 1.78(a)(3) is necessary. Such petition is hereby **GRANTED**.

A petition for acceptance of a claim for late priority under 37 CFR 1.78(a)(3) is only applicable to those applications filed on or after November 29, 2000. Further, the petition is appropriate only after the expiration of the period specified in 37 CFR 1.78(a)(2)(ii). In addition, the petition under 37 CFR 1.78(a)(3) must be accompanied by:

(1) the reference required by 35 U.S.C. § 120 and 37 CFR 1.78(a)(2)(i) of the prior-filed application, unless previously submitted;
(2) the surcharge set forth in § 1.17(t); and
(3) a statement that the entire delay between the date the claim was due under 37 CFR 1.78(a)(2)(ii) and the date the claim was filed was unintentional. The Director may require additional information where there is a question whether the delay was unintentional.

The petition complies with the requirements for a grantable petition under 37 CFR 1.78(a)(3) in that (1) a reference to the prior-filed international application has been included in the Application Data Sheet, as provided by 37 CFR 1.78(a)(2)(iii); (2) the surcharge fee required by 37 CFR 1.17(t) has been submitted; and (3) the petition contains a statement of unintentional delay which is construed that the entire delay between the date the claim was due under 37 CFR 1.78(a)(2)(ii) and the date the claim was filed was unintentional. If this interpretation is incorrect, petitioner is required to promptly notify this office. Accordingly, having found that the petition for acceptance of an unintentionally delayed claim for the benefit of priority under 35 U.S.C. §120 to the prior-filed application satisfies the conditions of 37 CFR 1.78(a)(3), the petition is granted.

The granting of the petition to accept the delayed benefit claim to the prior-filed application under 37 CFR 1.78(a)(3) should not be construed as meaning that this instant application is entitled to the benefit of the prior-filed application. In order for this application to be entitled to the benefit of the prior-filed application, all other requirements under 35 U.S.C. §120 and 37 CFR 1.78(a)(1) and (a)(2) must be met. The examiner will, in due course, consider this benefit claim and determine whether this application is entitled to the benefit of the earlier filing date.

Any inquiries concerning this decision may be directed to Cynthia M. Kratz at (571) 272-3286. All other inquiries concerning either the examination procedures or status of the application should be directed to the Technology Center.

The application is being forwarded to the Office of Patent Application Processing for processing as an application under 35 U.S.C. 111(a) having a filing date of **30 July 2010**, and for indicating in the Office records that the present application is a continuation-in-part of international application no. PCT/DK2009/000026, filed 02

February 2009. After completion of processing, OPAP is instructed to forward the application to the Office of Data Management for republishing of the application with the corrected benefit claim.

/Boris Milef/

Boris Milef
PCT Legal Examiner
Office of PCT Legal Administration

UNITED STATES PATENT AND TRADEMARK OFFICE

UNITED STATES DEPARTMENT OF COMMERCE
United States Patent and Trademark Office
Address: COMMISSIONER FOR PATENTS
P.O. Box 1450
Alexandria, Virginia 22313-1450
www.uspto.gov

APPLICATION NO.	FILING DATE	FIRST NAMED INVENTOR	ATTORNEY DOCKET NO.	CONFIRMATION NO.
12/865,523	07/30/2010	Keiichi Takeda	2010_0951A	3499

52349 7590 11/16/2011
WENDEROTH, LIND & PONACK L.L.P.
1030 15th Street, N.W.
Suite 400 East
Washington, DC 20005-1503

EXAMINER
KUNTZ, CURTIS A

ART UNIT	PAPER NUMBER
2614	

NOTIFICATION DATE	DELIVERY MODE
11/16/2011	ELECTRONIC

Please find below and/or attached an Office communication concerning this application or proceeding.

The time period for reply, if any, is set in the attached communication.

Notice of the Office communication was sent electronically on above-indicated "Notification Date" to the following e-mail address(es):

ddalecki@wenderoth.com
eoa@wenderoth.com

UNITED STATES PATENT AND TRADEMARK OFFICE

Commissioner for Patents
United States Patent and Trademark Office
P.O. Box 1450
Alexandria, VA 22313-1450
www.uspto.gov

WENDEROTH, LIND & PONACK L.L.P.
1030 15th Street, N.W.
Suite 400 East
Washington DC 20005-1503

In re Application of	**: DECISION ON REQUEST TO**
TAKEDA et al.	**: PARTICIPATE IN THE PATENT**
Application No.: 12/865,523	**: PROSECUTION HIGHWAY**
Filed: 30 July 2010	**: PROGRAM AND PETITION**
Attorney Docket No.: 2010_0951A	**: TO MAKE SPECIAL UNDER**
For: HEARING AID	**: 37 CFR 1.102(a)**

This is a decision on the request to participate in the PCT Patent Prosecution Highway (PCT-PPH) pilot program and the petition under 37 CFR 1.102(a), filed on 30 July 2010, to make the above-identified application special.

The request and petition are **GRANTED**.

Discussion

A grantable request to participate in the PCT-PPH pilot program and petition to make special require:

(1) The U.S. application must have an eligible relationship to one or more PCT applications where the ISA or IPEA are the JPO, EPO, KIPO, NPI, NBPR, or USPTO;

(2) At least one claim in the PCT application has novelty, inventive step, and industrial applicability and must be free of any observations in Box VIII in the latest work product in the international stage or applicant must identify and explain why the claim(s) is/are not subject to the observation in Box VIII;

(3) Applicant must submit a copy of the claim(s) from the PCT application(s) that have novelty, inventive step, and industrial applicability along with an English translation thereof and a statement that the English translation is accurate, if the claims are not in the English language;

(4) All the claims in the U.S. application must sufficiently correspond or be amended to sufficiently correspond to the claim(s) that have novelty, inventive step, and industrial applicability in the PCT application(s);

(5) Examination of the U.S. application has not begun;

(6) Applicant must submit a copy of the latest international work product from the PCT application indicating that the claim(s) have novelty, inventive step, and industrial applicability along with an English translation thereof and a statement that the English translation is accurate if the latest international work product is not in the English language;

(7) Applicant must submit an IDS listing the documents cited by the PCT examiner in the international work product along with copies of documents except U.S. patents or U.S. patent application publications.

The request to participate in the PCT-PPH pilot program and petition comply with the above requirements. Accordingly, the above-identified application has been accorded "special" status.

Telephone inquiries concerning this decision should be directed to Lee W. Young at 571-272-4549.

All other inquiries concerning the examination or status of the application is accessible in the PAIR system at http://www.uspto.gov/ebc.index.html.

This application will be forwarded to the examiner for action on the merits commensurate with this decision once this application's formality reviews have been completed.

Lee W. Young
Quality Assurance Specialist
Technology Center 2600

UNITED STATES PATENT AND TRADEMARK OFFICE

COMMISSIONER FOR PATENTS
UNITED STATES PATENT AND TRADEMARK OFFICE
P.O. BOX 1450
ALEXANDRIA, VA 22313-1450
www.uspto.gov

01 OCT 2010

WENDEROTH, LIND & PONACK, L.L.P.
1030 15TH STREET, N.W.,
SUITE 400 EAST
WASHINGTON, DC 20005-1503

In re Application of MATSUMIYA	:	
U.S. Application No.: 12/865,548	:	
PCT Application No.: PCT/JP2008/058696	:	
Int. Filing Date: 12 May 2008	:	DECISION
Priority Date Claimed: 18 September 2007	:	
Attorney Docket No.: 2010_1039A	:	
For: CONTROL DEVICE FOR VACUUM	:	
SUCTION TYPE URINE COLLECTING DEVICE	:	

This is in response to applicant's petition under 37 CFR 1.137(b) filed 30 July 2010.

BACKGROUND

On 12 May 2008, applicant filed international application PCT/JP2008/058696, which claimed priority of an earlier Japan application filed 18 September 2007. A copy of the international application was communicated to the USPTO from the International Bureau on 26 March 2009. The thirty-month period for paying the basic national fee in the United States expired on 18 March 2010.

On 19 March 2010, international application PCT/JP2008/058696 became abandoned as to the United States for failure to timely pay the basic national fee.

On 30 July 2010, applicant filed the present petition under 37 CFR 1.137(b).

DISCUSSION

Under 37 CFR 1.137(b), a petition requesting that an application be revived on the grounds of unintentional abandonment must be accompanied by: (1) the required reply unless previously filed, (2) the petition fee as set forth in 37 CFR 1.17(m), (3) a statement that the entire delay in filing the required reply from the due date for the reply until the filing of a grantable petition was unintentional, and (4) a terminal disclaimer if the application was filed before 08 June 1995.

With regard to item (1), applicant has provided the required reply under 35 U.S.C. 371.

With regard to item (2), applicant has provided the required petition fee.

With regard to item (3), applicant has provided an appropriate statement.

With regard to item (4), because the international application was filed after 08 June 1995, no terminal disclaimer is required.

CONCLUSION

For the reasons above, the petition under 37 CFR 1.137(b) is GRANTED.

This application is being forwarded to the United States Designated/Elected Office (DO/EO/US) for further processing in accordance with this decision, including preparation and mailing of a Notification of Missing Requirements under 35 U.S.C. 371 (Form PCT/DO/EO/905) indicating that a properly executed oath or declaration in compliance with 37 CFR 1.497 must be filed.

Bryan Lin
PCT Legal Examiner
PCT Legal Office

Telephone: 571-272-3303
Facsimile: 571-273-0459

PTO/SB/20PCT-EP (05-10)
Approved for use through 01/31/2012. OMB 0651-0058
U.S. Patent and Trademark Office; U. S. DEPARTMENT OF COMMERCE
Under the Paperwork Reduction Act of 1995, no persons are required to respond to a collection of information unless it displays a valid OMB control number.

REQUEST FOR PARTICIPATION IN THE PATENT COOPERATION TREATY - PATENT PROSECUTION HIGHWAY (PCT-PPH) PILOT PROGRAM BETWEEN THE EUROPEAN PATENT OFFICE (EPO) AND THE USPTO

Application No:	12/865,554	Filing date:	January 12, 2011
First Named Inventor:	Yves Boussant-Roux		
Title of the Invention:	Abrasive Grain Powder		

THIS REQUEST FOR PARTICIPATION IN THE PCT-PPH PILOT PROGRAM ALONG WITH THE REQUIRED DOCUMENTS MUST BE SUBMITTED VIA EFS-WEB. INFORMATION REGARDING EFS-WEB IS AVAILABLE AT HTTP://WWW.USPTO.GOV/EBC/EFS_HELP.HTML

APPLICANT HEREBY REQUESTS PARTICIPATION IN THE PCT-PPH PROGRAM AND PETITIONS TO MAKE THE ABOVE-IDENTIFIED APPLICATION SPECIAL UNDER THE PCT-PPH PROGRAM.

The above-identified application is (1) a national stage entry of the corresponding PCT application, or (2) a national stage entry of another PCT application which claims priority to the corresponding PCT application, or (3) a national application that claims domestic/ foreign priority to the corresponding PCT application, or (4) a national application which forms the basis for the priority claim in the corresponding PCT application, or (5) a continuing application of a U.S. application that satisfies one of (1) to (4) above, or (6) a U.S. application that claims domestic benefit to a U.S. provisional application which forms the basis for the priority claim in the corresponding PCT application.

The corresponding PCT application number(s) is/are: PCT/FR2009/050186

The international filing date of the corresponding PCT application(s) is/are: February 6, 2009

I. List of Required Documents:

a. **A copy of the latest international work product (WO/ISA, WO/IPEA, or IPER) in the above–identified corresponding PCT application(s)**

☐ Is attached

☒ Is not attached because the document is already in the U.S. application.

b. **A copy of all claims which were indicated as having novelty, inventive step and industrial applicability in the above-identified corresponding PCT application(s).**

☐ Is attached.

☒ Is not attached because the document is already in the U.S. application.

c. **English translations of the documents in a. and b. above are attached (if the documents are not in the English language). A statement that the English translation is accurate is attached for the document in b. above.**

This collection of information is required by 35 U.S.C. 119, 37 CFR 1.55, and 37 CFR 1.102(d). The information is required to obtain or retain a benefit by the public, which is to file (and by the USPTO to process) an application. Confidentiality is governed by 35 U.S.C. 122 and 37 CFR 1.11 and 1.14. This collection is estimated to take 2 hours to complete, including gathering, preparing, and submitting the completed application form to the USPTO. Time will vary depending upon the individual case. Any comments on the amount of time you require to complete this form and/or suggestions for reducing this burden should be sent to the Chief Information Officer, U.S. Patent and Trademark Office, U.S. Department of Commerce, P.O. Box 1450, Alexandria, VA 22313-1450. DO NOT SEND FEES OR COMPLETED FORMS TO THIS ADDRESS.

Approved for use through 01/31/2012. OMB 0651-0058
U.S.Patent and Trademark Office; U.S. DEPARTMENT OF COMMERCE
Under the Paperwork Reduction Act of 1995, no persons are required to respond to a collection of information unless it displays a valid OMB control number.

REQUEST FOR PARTICIPATION IN THE PCT-PPH PILOT PROGRAM BETWEEN THE EPO AND THE USPTO

(continued)

Application No.:	
First Named Inventor:	

d. **(1) An information disclosure statement listing the documents cited in the international work products (ISR, WO/ISA, WO/IPEA, IPER) of the corresponding PCT application.**

☐ Is attached

☒ Has already been filed in the above-identified U.S. application on September 14, 2010 & October 13, 2010

(2) Copies of all documents (except) for U.S. patents or U.S. patent application publications)

☐ Are attached.

☒ Have already been filed in the above-identified U.S. application on September 14, 2010 & October 13, 2010

II. Claims Correspondence Table:

Claims in US Application	Patentable Claims in the corresponding PCT Application	Explanation regarding the correspondence
1-19	1-19	Claims 1-19 of the U.S. Application are substantially similar to claims
		1-19 of the corresponding PCT Application.
		A preliminary amendment was filed in the U.S. Application on
		July 30, 2010 that amended claims 1-19 of the corresponding PCT
		Application for clarity, to remove multiple dependencies, and to conform
		to U.S. claim practice.

III. All the claims in the US application sufficiently correspond to the patentable claims in the corresponding PCT application.

Signature /Sarah Lhymn/	Date February 4, 2011
Name (Print/Typed) Sarah Lhymn for William P. Berridge	Registration Number 65,041

Privacy Act Statement

The **Privacy Act of 1974 (P.L. 93-579)** requires that you be given certain information in connection with your submission of the attached form related to a patent application or patent. Accordingly, pursuant to the requirements of the Act, please be advised that: (1) the general authority for the collection of this information is 35 U.S.C. 2(b)(2); (2) furnishing of the information solicited is voluntary; and (3) the principal purpose for which the information is used by the U.S. Patent and Trademark Office is to process and/or examine your submission related to a patent application or patent. If you do not furnish the requested information, the U.S. Patent and Trademark Office may not be able to process and/or examine your submission, which may result in termination of proceedings or abandonment of the application or expiration of the patent.

The information provided by you in this form will be subject to the following routine uses:

1. The information on this form will be treated confidentially to the extent allowed under the Freedom of Information Act (5 U.S.C. 552) and the Privacy Act (5 U.S.C 552a). Records from this system of records may be disclosed to the Department of Justice to determine whether disclosure of these records is required by the Freedom of Information Act.
2. A record from this system of records may be disclosed, as a routine use, in the course of presenting evidence to a court, magistrate, or administrative tribunal, including disclosures to opposing counsel in the course of settlement negotiations.
3. A record in this system of records may be disclosed, as a routine use, to a Member of Congress submitting a request involving an individual, to whom the record pertains, when the individual has requested assistance from the Member with respect to the subject matter of the record.
4. A record in this system of records may be disclosed, as a routine use, to a contractor of the Agency having need for the information in order to perform a contract. Recipients of information shall be required to comply with the requirements of the Privacy Act of 1974, as amended, pursuant to 5 U.S.C. 552a(m).
5. A record related to an International Application filed under the Patent Cooperation Treaty in this system of records may be disclosed, as a routine use, to the International Bureau of the World Intellectual Property Organization, pursuant to the Patent Cooperation Treaty.
6. A record in this system of records may be disclosed, as a routine use, to another federal agency for purposes of National Security review (35 U.S.C. 181) and for review pursuant to the Atomic Energy Act (42 U.S.C. 218(c)).
7. A record from this system of records may be disclosed, as a routine use, to the Administrator, General Services, or his/her designee, during an inspection of records conducted by GSA as part of that agency's responsibility to recommend improvements in records management practices and programs, under authority of 44 U.S.C. 2904 and 2906. Such disclosure shall be made in accordance with the GSA regulations governing inspection of records for this purpose, and any other relevant (*i.e.*, GSA or Commerce) directive. Such disclosure shall not be used to make determinations about individuals.
8. A record from this system of records may be disclosed, as a routine use, to the public after either publication of the application pursuant to 35 U.S.C. 122(b) or issuance of a patent pursuant to 35 U.S.C. 151. Further, a record may be disclosed, subject to the limitations of 37 CFR 1.14, as a routine use, to the public if the record was filed in an application which became abandoned or in which the proceedings were terminated and which application is referenced by either a published application, an application open to public inspection or an issued patent.
9. A record from this system of records may be disclosed, as a routine use, to a Federal, State, or local law enforcement agency, if the USPTO becomes aware of a violation or potential violation of law or regulation.

UNITED STATES PATENT AND TRADEMARK OFFICE

UNITED STATES DEPARTMENT OF COMMERCE
United States Patent and Trademark Office
Address: COMMISSIONER FOR PATENTS
P.O. Box 1450
Alexandria, Virginia 22313-1450
www.uspto.gov

APPLICATION NO.	FILING DATE	FIRST NAMED INVENTOR	ATTORNEY DOCKET NO.	CONFIRMATION NO.
12/865,554	01/12/2011	Yves Boussant-Roux	146324	3781

25944 7590 03/31/2011
OLIFF & BERRIDGE, PLC
P.O. BOX 320850
ALEXANDRIA, VA 22320-4850

EXAMINER
PARVINI, PEGAH

ART UNIT	PAPER NUMBER
1731	

NOTIFICATION DATE	DELIVERY MODE
03/31/2011	ELECTRONIC

Please find below and/or attached an Office communication concerning this application or proceeding.

The time period for reply, if any, is set in the attached communication.

Notice of the Office communication was sent electronically on above-indicated "Notification Date" to the following e-mail address(es):

OfficeAction25944@oliff.com
jarmstrong@oliff.com

UNITED STATES PATENT AND TRADEMARK OFFICE

Commissioner for Patents
United States Patent and Trademark Office
P.O. Box 1450
Alexandria, VA 22313-1450
www.uspto.gov

MAR 31 2011

CT

In re application of	:	DECISION ON REQUEST TO
Yves Boussant-Roux et al	:	PARTICIPATE IN PATENT
Serial No. 12/865,554	:	PROSECUTION HIGHWAY
Filed: January 12, 2011	:	PROGRAM AND
For: ABRASIVE GRAIN POWDER	:	PETITION TO MAKE SPECIAL
	:	UNDER 37 CFR 1.102(a)

This is a decision on the request to participate in the PCT Patent Prosecution Highway (PCT-PPH) pilot program and the petition under 37 CFR 1.102(a), filed February 4, 2011, to make the above-identified application special.

The request and petition are **GRANTED**.

A grantable request to participate in the PCT-PPH pilot program and petition to make special require:

(1) The U.S. application must disclose an eligible relationship to one or more PCT applications where the ISA or IPEA are the JPO, EPO, USPTO or KIPO;

(2) At least one claim in the PCT application has novelty, inventive step, and industrial applicability and must be free of any observations in Box VIII in the latest work product in the international stage or applicant must identify and explain why the claim(s) is/are not subject to the observation in Box VIII;

(3) Applicant must submit a copy of the claim(s) from the PCT application(s) that have novelty, inventive step, and industrial applicability along with an English translation thereof and a statement that the English translation is accurate, if the claims are not in the English language;

(4) Applicant must submit a claims correspondence table in English and all the independent claims in the U.S. application must sufficiently correspond or be amended to sufficiently correspond to the claim(s) that have novelty, inventive step, and industrial applicability in the PCT application(s);

(5) Examination of the U.S. application has not begun;

(6) Applicant must submit a copy of the latest international work product from the PCT application indicating that the claim(s) have novelty, inventive step, and industrial

applicability along with an English translation thereof if the latest international work product is not in the English language; and

(7) Applicant must submit an IDS listing the documents cited by the PCT examiner in the international work product along with copies of documents except U.S. patents or U.S. patent application publications.

The request to participate in the PPH program and petition comply with the above requirements. Accordingly, the above-identified application has been accorded "special" status.

The application is being forwarded to the examiner for action on the merits commensurate with this decision.

Any inquiry regarding this decision should be directed to Christine Tierney, Quality Assurance Specialist, at (571) 272-1055.

All other inquiries concerning the examination or status of the application is accessible in the PAIR system at http://www.uspto.gov/ebc/index.html.

/Christine Tierney/

Christine Tierney
Quality Assurance Specialist
Technology Center 1700

UNITED STATES PATENT AND TRADEMARK OFFICE

Commissioner for Patents
United States Patent and Trademark Office
Washington, D.C. 20231
www.uspto.gov

MAILED

MAY 24 2011

PCT LEGAL ADMINISTRATION

BIRCH STEWART KOLASCH & BIRCH
PO BOX 747
FALLS CHURCH VA 22040-0747

In re Application of	:	
MILED, et al.	:	DECISION ON PETITION
Serial No.: 12/865,567	:	
PCT No.: PCT/IB2009/000373	:	UNDER 37 CFR 1.47(a)
Int. Filing Date: 30 January 2009	:	
Priority Date: 31 January 2008	:	
Atty Docket No.: 2121-0222PUS1	:	
For: REVERSE GENETICS OF NEGATIVE-STRAND	:	
RNA VIRUSES IN YEAST	:	

This decision is in response to applicant's petition under 37 CFR 1.47(a) filed 28 April 2011 in the United States Patent and Trademark Office (USPTO) to accept the application without the signatures of inventor Chaouki Miled.

BACKGROUND

On 30 January 2009, applicant filed international application PCT/IB2009/000373 which claimed priority to a previous application filed 31 January 2008. Pursuant to 37 CFR 1.495, the thirty-month period for paying the basic national fee in the United States was set to expire at midnight on 31 July 2010.

On 30 July 2010, applicant filed a transmittal letter for entry into the national stage in the United States, which was accompanied by the requisite basic national fee as required by 35 U.S.C. 371(c)(1); a preliminary amendment and an Application Data Sheet.

On 29 September 2010, applicant was mailed a NOTIFICATION OF MISSING REQUIREMENTS UNDER 35 U.S.C. 371 (Form PCT/DO/EO/905) informing applicant of the need to provide an executed oath or declaration of the inventors, in compliance with 37 CFR 1.497(a) and (b), identifying the application by the international application number and international filing date. Applicant was given two months to respond and advised that this time period could be extended with a proper petition and payment of fees.

On 28 April 2011, applicant filed the present petition under 37 CFR 1.47(a) accompanied by a petition for a five-month extension of time and payment of the appropriate extension of time fee. The response is timely filed.

DISCUSSION

A petition under 37 CFR 1.47(a) must be accompanied by (1) the fee under 37 CFR 1.17(g), (2) factual proof that the missing joint investor refuses to execute the application or cannot be reached after diligent effort, (3) a statement of the last known address of the missing inventor, and (4) an oath or declaration by each 37 CFR 1.47(a) applicant on his or her own behalf and on behalf of the non-signing joint inventor.

Applicant has satisfied items 1, 3 and 4.

As to item (2), in support of the contention that inventor Miled has refused to sign a declaration for the present application applicant has included a declaration from Ms. Anne Desaix. The declaration confirms that Mr. Miled was presented with a complete set of application papers and declaration for signature. According to the declaration, Mr. Miled responded on 27 March 2011 with concerns as to the assignment document. A follow-up letter was mailed to Mr. Miled on 18 April 2011 and Ms. Desaix executed the enclosed declaration of facts on 27 April 2011 indicating that no response had been received to the letter mailed 18 April 2011. While the silence of the inventor can constitute a refusal under 37 CFR 1.47; in this case sufficient time has not elapsed between the mailing of the second letter on 18 April 2011 and the declaration of 27 April 2011. Considering the time needed for the letter to reach Mr. Miled, applicant has only allowed for one week of time for Mr. Miled to review the letter and mail in the declaration.

A renewed petition which confirms that to date Mr. Miled has not responded to the letter of 18 April 2011 (or responded with additional concerns/conditions for signing) would be granted.

It is not possible to grant applicant's petition at this time.

CONCLUSION

For the reasons stated above, applicant's petition under 37 CFR 1.47(a) is **DISMISSED**.

Any reconsideration on the merits of this petition must be filed within **TWO (2) MONTHS** from the mail date of this decision. Any reconsideration request should include a cover letter entitled "Renewed Petition Under 37 CFR 1.47(a)." No additional petition fee is required. Extensions of time may be obtained under 37 CFR 1.136(a).

Any further correspondence with respect to this matter should be directed to Mail Stop PCT, Commissioner for Patents, Office of PCT Legal Administration, P.O. Box 1450, Alexandria, Virginia 22313-1450, with the contents of the letter marked to the attention of the Office of PCT Legal Administration or electronically filed utilizing the USPTO's EFS-Web electronic filing system.

Derek A. Putonen
Attorney Advisor
Office of PCT Legal Administration
Tel: 571-272-3294

UNITED STATES PATENT AND TRADEMARK OFFICE

Commissioner for Patents
United States Patent and Trademark Office
Washington, D.C. 20231
www.uspto.gov

MAILED

AUG 26 2011

PCT LEGAL ADMINISTRATION

BIRCH STEWART KOLASCH & BIRCH
PO BOX 747
FALLS CHURCH VA 22040-0747

In re Application of	:	
MILED, et al.	:	DECISION ON PETITION
Serial No.: 12/865,567	:	
PCT No.: PCT/IB2009/000373	:	UNDER 37 CFR 1.47(a)
Int. Filing Date: 30 January 2009	:	
Priority Date: 31 January 2008	:	
Atty Docket No.: 2121-0222PUS1	:	
For: REVERSE GENETICS OF NEGATIVE	:	
STRAND RNA VIRUSES IN YEAST	:	

This decision is in response to applicant's renewed petition under 37 CFR 1.47(a) filed 22 July 2011 to accept the application without the signature of joint inventor Chaouki Miled.

BACKGROUND

On 24 May 2011, applicant was mailed a decision dismissing applicant's petition under 37 CFR 1.47. Applicant was afforded two months to file any request for reconsideration.

On 22 July 2011, applicant filed the present renewed petition under 37 CFR 1.47(a).

DISCUSSION

As detailed in the decision mailed 14 December 2010, a petition under 37 CFR 1.47(a) must be accompanied by (1) the fee under 37 CFR 1.17(g), (2) factual proof that the missing joint investor refuses to execute the application or cannot be reached after diligent effort, (3) a statement of the last known address of the missing inventor, and (4) an oath or declaration by each 37 CFR 1.47(a) applicant on his or her own behalf and on behalf of the non-signing joint inventor. Applicant previously satisfied items 1 through 3.

With the filing of the present renewed petition and accompanying exhibits applicant has satisfied the concerns raised in the decision mailed 24 May and therefore it is proper to grant applicant's renewed petition at this time.

CONCLUSION

For the reasons stated above, applicant's renewed petition under 37 CFR 1.47(a) is **GRANTED**.

The application has an international filing date of 30 January 2009 under 35 U.S.C. 363, and will be given a date of **28 April 2011** under 35 U.S.C. 371(c)(1), (c)(2) and (c)(4).

As provided in 37 CFR 1.47(c), a notice of the filing of this application will be forwarded to the non-signing inventors at their last known addresses of record. A notice of the filing of the application under 37 CFR 1.47(a) will be published in the Official Gazette.

This application is being returned to the DO/EO/US for processing in accordance with this decision.

Derek A. Putonen
Attorney Advisor
Office of PCT Legal Administration
Tel: 571-272-3294

UNITED STATES PATENT AND TRADEMARK OFFICE

Commissioner for Patents
United States Patent and Trademark Office
P.O. Box 1450
Alexandria, VA 22313-1450
www.uspto.gov

Mr. Chaouki Miled
15 avenue de la Residence
92160 Antony
FRANCE

MAILED
AUG 26 2011
PCT LEGAL ADMINISTRATION

In re Application of
MILED, et al.
Serial No.: 12/865,567
PCT No.: PCT/IB2009/000373
Int. Filing Date: 30 January 2009
Priority Date: 31 January 2008
Atty Docket No.: 2121-0222PUS1
For: REVERSE GENETICS OF NEGATIVE STRAND RNA VIRUSES IN YEAST

Dear Mr. Miled:

You are named as an inventor in the above identified United States patent application, filed under the provisions of 37 CFR 1.47(a) and 35 U.S.C. 116. Should a patent be granted, you will be designated as an inventor. As a named inventor, you are entitled to inspect any paper in the file wrapper of the application, order copies of all or any part thereof (at a prepaid cost per 37 CFR 1.19) or to make your position of record in the application. Alternately, you may arrange to do any of the preceding through a registered patent agent or attorney presenting written authorization from you. If you care to join in the application, the law firm of record (see below) would presumably assist you. Joining in the application would entail the filing of the appropriate oath or declaration by you pursuant to 37 CFR 1.63.

Derek A. Putonen
Attorney Advisor
Office of PCT Legal Administration
Tel: (571) 272-3294

Counsel of Record:
BIRCH STEWART KOLASCH & BIRCH
PO BOX 747
FALLS CHURCH VA 22040-0747
UNITED STATES OF AMERICA

UNITED STATES PATENT and TRADEMARK OFFICE

COMMISSIONER FOR PATENTS
UNITED STATES PATENT AND TRADEMARK OFFICE
P.O BOX 1450
ALEXANDRIA, VA 22313-1450
www.uspto.gov

WINSTEAD PC
P.O. BOX 50784
DALLAS TX 75201

MAILED

FEB 03 2011

PCT LEGAL ADMINISTRATION

In re Application of	:	DECISION ON
Evans et al	:	
Application No.: 12/865,591	:	
PCT No.: PCT/GB2009/050005	:	PETITION UNDER
Int. Filing Date: 06 January 2009	:	
Priority Date: 06 February 2008	:	
Attorney's Docket No.: 51026-P036WOUS	:	37 CFR 1.47(a)
For: LOAD TRANSPORTATION SYSTEM	:	

This decision is in response to petitioner's "Petition Under 37 CFR 1.47(a)" submitted on 03 December 2010, requesting the acceptance of the application without the signature of the joint inventor Ian Evans.

BACKGROUND

On 30 July 2010, applicants filed a transmittal letter for entry into the national stage in the United States, which was accompanied by, inter alia, the requisite basic national fee as required by 35 U.S.C. 371(c)(1). However, no executed declaration or oath was submitted at such time.

On 15 September 2010, the United States Designated/Elected Office (DO/EO/US) mailed a "NOTIFICATION OF MISSING REQUIREMENTS UNDER 35 U.S.C. 371 IN THE UNITED STATES DESIGNATED/ELECTED OFFICE (DO/EO/US)" (Form PCT/DO/EO/905) which informed applicant, inter alia, that an "Oath or Declaration of the inventors, in compliance with 37 CFR 1.497(a), and (b), identifying the applicant by the international application number and international filing date." The notification further stated that all items must be submitted within two months from the date of mailing or by 32 months from the priority date for the application in order to avoid abandonment of the national stage application.

In an attempt to satisfy the requirements of 35 U.S.C. 371(c)(4) and the Notice, petitioner filed on 03 December 2010, *inter alia*, a petition under 37 CFR 1.47(a), and an executed declaration without the signature of joint inventor Ian Evans.

DISCUSSION

A petition under 37 CFR 1.47(a) must be accompanied by (1) the fee under 37 CFR 1.17(g), (2) factual proof that the missing joint inventor refuses to execute the application or cannot be reached after diligent effort, (3) a statement of the last known address of the missing inventor, and (4) an oath or declaration by each 37 CFR 1.47(a) applicant on his or her own behalf and on behalf of the non-signing joint inventor.

Petitioner has satisfied items (1) - (4) of 37 CFR 1.47(a).

Regarding item (1), the petition fee of $200.00 under 37 CFR 1.17(g) has been paid.

Regarding item (2), the averments of Steven McIlroy are sufficient to support a finding that the nonsigning inventor, Mr. Evans refuses to sign because it is clear that a *bona fide* attempt was made to present a copy of the application papers (specification, including claims, drawings, and oath or declaration) to the nonsigning inventor for signature mailed on 05 November 2010, and Mr. Evans refused as evidenced by the letter dated November 8, 2010 (Exhibit E) in which he states his refusal to sign to the required papers.

Regarding item (3), petitioner has provided a statement of the last known address of the nonsigning joint inventor.

Ian Evans
c/o Lock Office
Hartlepool Marina
Slake Terrace
Hartlepool
TS24 ORU

Regarding item (4), petitioner has provided a properly executed declaration without the signature of joint inventor Ian Evans.

Consequently, the current record does sufficiently establish Mr. Evan's refusal to join in the application.

Petitioner has satisfied items (1), (2), (3), and (4) under 37 CFR 1.47(a), thus completing the requirements under 37 CFR 1.47(a).

CONCLUSION

The petition under 37 CFR 1.47(a) is **GRANTED** without prejudice.

This application is being forwarded to the United States Designated/Elected Office (DO/EO/US) for continued processing under 35 U.S.C. 371.

As provided in 37 CFR 1.47(a), a notice of the filing of this application will be forwarded to the non-signing inventor at his last known address of record.

A notice of the filing of the application under 37 CFR 1.47(a) will be published in the Official Gazette.

Rafael Bacares
PCT Legal Examiner
PCT Legal Office
Telephone: (571) 272-3276
Facsimile: (571) 273-0459

UNITED STATES PATENT and TRADEMARK OFFICE

COMMISSIONER FOR PATENTS
UNITED STATES PATENT AND TRADEMARK OFFICE
P.O BOX 1450
ALEXANDRIA, VA 22313-1450
www.uspto.gov

Ian Evans
c/o Lock Office
Hartlepool Marina
Slake Terrace
Hartlepool
TS24 ORU, United Kingdon

MAILED

FEB 03 2011

PCT LEGAL ADMINISTRATION

In re Application of
Evans et al
Application No.: 12/865,591
PCT No.: PCT/GB2009/050005
Int. Filing Date: 06 January 2009
Priority Date: 06 February 2008
Attorney's Docket No.: 51026-P036WOUS
For: LOAD TRANSPORTATION SYSTEM

Dear: Mr. Evans

You are named as an inventor in the above identified United States patent application, filed under the provisions of 37 CFR 1.47(a) and 35 U.S.C. 116. Should a patent be granted, you will be designated as an inventor.

As a named inventor, you are entitled to inspect any paper in the file wrapper of the application, order copies of all or any part thereof (at a prepaid cost per 37 CFR 1.19) or to make your position of record in the application. Alternatively, you may arrange to do any of the preceding through a registered patent agent or attorney presenting written authorization from you. If you care to join in the application, counsel of record (see below) would presumably assist you. Joining in the application would entail the filing of an appropriate oath or declaration by you pursuant to 37 CFR 1.63.

R Bacares

Rafael Bacares
PCT Legal Examiner
PCT Legal Office
Telephone: (571) 272-3276
Facsimile: (571) 273-0459

WINSTEAD PC
P.O. BOX 50784
DALLAS TX 75201

UNITED STATES PATENT AND TRADEMARK OFFICE

Commissioner for Patents
United States Patent and Trademark Office
P.O. Box 1450
Alexandria, VA 22313-1450
www.uspto.gov

MAILED

JUN 09 2011

PCT LEGAL ADMINISTRATION

UNGARETTI & HARRIS LLP
INTELLECTUAL PROPERTY GROUP - PATENTS
70 WEST MADISON STREET
SUITE 3500
CHICAGO IL 60602-4224

In re Application of	:	
THIBAUT, Michel, et al.	:	
Application No.: 12/865,600	:	
PCT No.: PCT/GB2009/000251	:	DECISION
Int. Filing Date: 30 January 2009	:	
Priority Date: 02 February 2008	:	
Docket No.: 52070-1367 (PA-1338-US)	:	
For: CAN END	:	

This decision is in response to applicants' response to the Notification of Defective Response, filed with the United States Patent and Trademark Office on 02 March 2011.

BACKGROUND

On 28 September 2010, the Office mailed Notification of Missing Requirements (Form PCT/DO/EO/905) indicating that an oath or declaration of the inventors in compliance with 37 CFR 1.497(a)-(b) was required.

On 23 November 2010, applicants supplied a declaration of the inventors. It contained non-initialed, non-dated alterations to the name of the first inventor and to the residence and address of the second.

On 06 December 2010, the Office mailed Notification of Defective Response indicating that the declaration was not executed in accordance with either 37 CFR 1.66 or 1.68 and that the first and second inventors had not initialed the alterations to the declaration.

On 05 January 2011, applicants resubmitted the 23 November 2010 declarations with the first and second inventors having initialed the changes.

On 03 February 2011, the Office mailed Notification of Defective Response (Form PCT/DO/EO/916) indicating the spelling of the first inventor's name did not match the spelling on the published application or on the ADS.

On 02 March 2011, applicants filed a statement indicating that Michel Thibaut's name had been incorrectly spelled on the international application and in the original ADS and that the correct spelling of his name is "Michel Thibaut".

DISCUSSION

Applicants have stated that the first inventor's name is "Michel Thibaut" and that the discrepancy in his name was the result of a typographical error. This is acceptable under MPEP 1893.01(e).

As set forth in MPEP 605.04(a), "Any changes made in ink in the application or oath prior to signing should be initialed and dated by the applicants prior to execution of the oath or declaration. The Office ** will require a new oath or declaration >if the alterations are not initialed and dated<." Neither declaration executed by the first and second inventors complies with this provision. The examiner may later request an oath or declaration in compliance with the above requirement.

However, the 23 November 2010 declarations satisfy 37 CFR 1.497(a)-(b).

CONCLUSION

The 23 November 2010 declarations are accepted for the purposes of national phase entry under 37 CFR 1.497(a)-(b).

This application is being referred to the national phase processing branch of the Office of Patent Application Processing for further action consistent with this decision.

/Erin P. Thomson/

Erin P. Thomson
Attorney Advisor
PCT Legal Administration

Telephone: 571-272-3292

UNITED STATES PATENT and TRADEMARK OFFICE

COMMISSIONER FOR PATENTS
UNITED STATES PATENT AND TRADEMARK OFFICE
P.O BOX 1450
ALEXANDRIA, VA 22313-1450
www.uspto.gov

YOUNG & THOMPSON
209 Madison Street
Suite 500
Alexandria VA 22314

MAILED
FEB 04 2011
PCT LEGAL ADMINISTRATION

In re Application of	:	
WINTELS	:	
Application No.: 12/865,601	:	
PCT No.: PCT/NL2009/050048	:	
Int. Filing Date: 30 January 2009	:	DECISION
Priority Date: 30 January 2008	:	
Attorney's Docket No.: 2005-1068	:	
For: ANTENNA DEVICE AND METHOD	:	

This is in response to applicant's "Request for Refund," filed on 07 October 2010 requesting a refund because the status of the current application is a small entity status based on the filing on 28 September 2010.

BACKGROUND

On 30 July 2010, applicant filed electronically via EFS-WEB for entry into the national stage in the United States of America. The national stage application was filed as a large entity at such time.

On 30 July 2010, the USPTO charged applicant as a large entity for a total cost of $1,240.00

On 07 October 2010, filed a request for refund of $620.00 because applicant claimed small entity status.

DISCUSSION

37 CFR 1.28(a) provides:

> (a) *Refunds based on later establishment of small entity status.* A refund pursuant to § 1.26 part, based on establishment of small entity status, of a portion of fees timely paid in full prior to establishing status as a small entity may only be obtained if an assertion under § 1.27 and a request for a refund of the excess amount are filed within three months of the date of the timely payment of the full fee. The Three-month time period is not extendable under § 1.136. Status as a small entity is waived for any fee by the failure to establish the status prior to paying, at the time of paying, or within two months of the date of payment of, the fee. (Emphasis added).

The three-month period for refunds under 37 CFR 1.28(a) starts from the date of receipt of an authorization to charge fees and not from the date of debit of the fee to a deposit account. Note MPEP 509.03.

In the present case, the 07 October 2010 request for a refund of a portion of the fees paid for the present application based upon on the subsequent establishment of small entity status, was made within three months as required under 37 CFR 1.28(a) of the payment of the large entity fees on 30 July 2010. Accordingly, petitioner is entitled to a refund of any portion of the large entity fees paid on the present application.

As a result, applicant was refunded $620.00 to the credit card on 15 October 2010.

CONCLUSION

The petition under 37 CFR 1.28 is **GRANTED.**

This application is being returned to the United States Designated/Elected Office (DO/EO/US) for continued processing.

Rafael Bacares
PCT Legal Examiner
PCT Legal Office
Tel: (571) 272-3276
Fax: (571) 273-0459

PTO/SB/20PCT-US (09-10)
Approved for use through 01/31/2012. OMB 0651-0058
U.S. Patent and Trademark Office; U. S. DEPARTMENT OF COMMERCE
Under the Paperwork Reduction Act of 1995, no persons are required to respond to a collection of information unless it displays a valid OMB control number.

REQUEST FOR PARTICIPATION IN THE PATENT COOPERATION TREATY - PATENT PROSECUTION HIGHWAY (PCT-PPH) PILOT PROGRAM IN A U.S. APPLICATION WHERE THE USPTO WAS THE ISA OR IPEA

Application No:	12/865,602	Filing date:	7/30/2010
First Named Inventor:	Bradshaw		
Title of the Invention:	Axially Damped Hydraulic Mount Assembly		

THIS REQUEST FOR PARTICIPATION IN THE PCT-PPH PILOT PROGRAM ALONG WITH THE REQUIRED DOCUMENTS MUST BE SUBMITTED VIA EFS-WEB. INFORMATION REGARDING EFS-WEB IS AVAILABLE AT HTTP://WWW.USPTO.GOV/EBC/EFS_HELP.HTML

APPLICANT HEREBY REQUESTS PARTICIPATION IN THE PCT-PPH PROGRAM AND PETITIONS TO MAKE THE ABOVE-IDENTIFIED APPLICATION SPECIAL UNDER THE PCT-PPH PROGRAM.

The above-identified application is (1) a national stage entry of the corresponding PCT application, or (2) a national stage entry of another PCT application which claims priority to the corresponding PCT application, or (3) a national application that claims domestic/ foreign priority to the corresponding PCT application, or (4) a national application which forms the basis for the priority claim in the corresponding PCT application, or (5) a continuing application of a U.S. application that satisfies one of (1) to (4) above, or (6) a U.S. application that claims domestic benefit to a U.S. provisional application which forms the basis for the priority claim in the corresponding PCT application.

The corresponding PCT application number(s) is/are: PCT/US2009/033199

The international date of the corresponding PCT application(s) is/are: PCT International Filing Date: 2/5/2009; PCT Priority Date: 2/5/2008

I. List of Required Documents:

a. **A copy of the latest international work product (WO/ISA, WO/IPEA, or IPER) in the above–identified corresponding PCT application(s)**

☐ Is attached

☒ Is not attached because the document is already in the U.S. application.

b. **A copy of all claims which were indicated as having novelty, inventive step and industrial applicability in the above-identified corresponding PCT application(s).**

☐ Is attached.

☒ Is not attached because the document is already in the U.S. application.

c. **English translations of the documents in a. and b. above are attached (if the documents are not in the English language). A statement that the English translation is accurate is attached for the document in b. above.**

This collection of information is required by 35 U.S.C. 119, 37 CFR 1.55, and 37 CFR 1.102(d). The information is required to obtain or retain a benefit by the public, which is to file (and by the USPTO to process) an application. Confidentiality is governed by 35 U.S.C. 122 and 37 CFR 1.11 and 1.14. This collection is estimated to take 2 hours to complete, including gathering, preparing, and submitting the completed application form to the USPTO. Time will vary depending upon the individual case. Any comments on the amount of time you require to complete this form and/or suggestions for reducing this burden should be sent to the Chief Information Officer, U.S. Patent and Trademark Office, U.S. Department of Commerce, P.O. Box 1450, Alexandria, VA 22313-1450. DO NOT SEND FEES OR COMPLETED FORMS TO THIS ADDRESS.

Under the Paperwork Reduction Act of 1995, no persons are required to respond to a collection of information unless it displays a valid OMB control number.

REQUEST FOR PARTICIPATION IN THE PCT-PPH PILOT PROGRAM IN A U.S. APPLICATION WHERE THE USPTO WAS THE ISA OR IPEA

(continued)

Application No.:	12/865,602
First Named Inventor:	Bradshaw

d. **(1) An information disclosure statement listing the documents cited in the international work products (ISR, WO/ISA, WO/IPEA, IPER) of the corresponding PCT application.**

☐ Is attached

☒ Has already been filed in the above-identified U.S. application on 7/30/2010

(2) Copies of all documents (except) for U.S. patents or U.S. patent application publications)

☐ Are attached.

☒ Have already been filed in the above-identified U.S. application on 7/30/2010

II. Claims Correspondence Table:

Claims in US Application (as amended by Preliminary Amendment)	Patentable Claims in the corresponding PCT Application	Explanation regarding the correspondence
2-4,6, 8-16	6	Claim 6 is amended into independent form and sufficiently corresponds to claim 6 of the PCT application which is indicated as having novelty, inventive step, and industrial application and free of any observation described in Box VIII in the latest work product of the PCT application. Claims 2,4, 8-10, and12 have been amended to depend from base claim 6, such that claims 2-4, 6, and 8-16 now depend from base claim 6 and sufficiently correspond to base claim 6 as being narrower in scope.
7	6, 7	Claim 7 depends from base claim 6. Claim 7 is of the same scope and sufficiently corresponds to claim 7 of the PCT application which is indicated as having novelty, inventive step, and industrial application and free of any observation described in Box VIII in the latest work product of the PCT application.
5, 17, 19-22	17	Claim 17 is amended into independent form and sufficiently corresponds to claim 17 of the PCT application which is indicated as having novelty, inventive step, and industrial application and free of any observation described in Box VIII in the latest work product of the PCT application. Claims 5 and 19 are amended to depend from base claim 17, such that claims 5 and 19-22 now depend from base claim 17 and sufficiently correspond to base claim 17 as being narrower in scope.
18	17, 18	Claim 18 depends from base claim 17. Claim 18 is of the same scope and sufficiently corresponds to claim 18 of the PCT application which is indicated as having novelty, inventive step, and industrial application and free of any observation described in Box VIII in the latest work product of the PCT application.

III. All the claims in the US application sufficiently correspond to the patentable claims in the corresponding PCT application.

Signature /David L. Atallah/	Date 11/15/2010
Name (Print/Typed) David L. Atallah	Registration Number 66,503

Privacy Act Statement

The **Privacy Act of 1974 (P.L. 93-579)** requires that you be given certain information in connection with your submission of the attached form related to a patent application or patent. Accordingly, pursuant to the requirements of the Act, please be advised that: (1) the general authority for the collection of this information is 35 U.S.C. 2(b)(2); (2) furnishing of the information solicited is voluntary; and (3) the principal purpose for which the information is used by the U.S. Patent and Trademark Office is to process and/or examine your submission related to a patent application or patent. If you do not furnish the requested information, the U.S. Patent and Trademark Office may not be able to process and/or examine your submission, which may result in termination of proceedings or abandonment of the application or expiration of the patent.

The information provided by you in this form will be subject to the following routine uses:

1. The information on this form will be treated confidentially to the extent allowed under the Freedom of Information Act (5 U.S.C. 552) and the Privacy Act (5 U.S.C 552a). Records from this system of records may be disclosed to the Department of Justice to determine whether disclosure of these records is required by the Freedom of Information Act.
2. A record from this system of records may be disclosed, as a routine use, in the course of presenting evidence to a court, magistrate, or administrative tribunal, including disclosures to opposing counsel in the course of settlement negotiations.
3. A record in this system of records may be disclosed, as a routine use, to a Member of Congress submitting a request involving an individual, to whom the record pertains, when the individual has requested assistance from the Member with respect to the subject matter of the record.
4. A record in this system of records may be disclosed, as a routine use, to a contractor of the Agency having need for the information in order to perform a contract. Recipients of information shall be required to comply with the requirements of the Privacy Act of 1974, as amended, pursuant to 5 U.S.C. 552a(m).
5. A record related to an International Application filed under the Patent Cooperation Treaty in this system of records may be disclosed, as a routine use, to the International Bureau of the World Intellectual Property Organization, pursuant to the Patent Cooperation Treaty.
6. A record in this system of records may be disclosed, as a routine use, to another federal agency for purposes of National Security review (35 U.S.C. 181) and for review pursuant to the Atomic Energy Act (42 U.S.C. 218(c)).
7. A record from this system of records may be disclosed, as a routine use, to the Administrator, General Services, or his/her designee, during an inspection of records conducted by GSA as part of that agency's responsibility to recommend improvements in records management practices and programs, under authority of 44 U.S.C. 2904 and 2906. Such disclosure shall be made in accordance with the GSA regulations governing inspection of records for this purpose, and any other relevant (*i.e.*, GSA or Commerce) directive. Such disclosure shall not be used to make determinations about individuals.
8. A record from this system of records may be disclosed, as a routine use, to the public after either publication of the application pursuant to 35 U.S.C. 122(b) or issuance of a patent pursuant to 35 U.S.C. 151. Further, a record may be disclosed, subject to the limitations of 37 CFR 1.14, as a routine use, to the public if the record was filed in an application which became abandoned or in which the proceedings were terminated and which application is referenced by either a published application, an application open to public inspection or an issued patent.
9. A record from this system of records may be disclosed, as a routine use, to a Federal, State, or local law enforcement agency, if the USPTO becomes aware of a violation or potential violation of law or regulation.

UNITED STATES PATENT AND TRADEMARK OFFICE

UNITED STATES DEPARTMENT OF COMMERCE
United States Patent and Trademark Office
Address: COMMISSIONER FOR PATENTS
P.O. Box 1450
Alexandria, Virginia 22313-1450
www.uspto.gov

APPLICATION NO.	FILING DATE	FIRST NAMED INVENTOR	ATTORNEY DOCKET NO.	CONFIRMATION NO.
12/865,602	11/15/2010	Jeffery Michael Bradshaw	60158-521 PUS1	4131

26096 7590 02/03/2011
CARLSON, GASKEY & OLDS, P.C.
400 WEST MAPLE ROAD
SUITE 350
BIRMINGHAM, MI 48009

EXAMINER

ART UNIT	PAPER NUMBER
3657	

MAIL DATE	DELIVERY MODE
02/03/2011	PAPER

Please find below and/or attached an Office communication concerning this application or proceeding.

The time period for reply, if any, is set in the attached communication.

UNITED STATES PATENT AND TRADEMARK OFFICE

Commissioner for Patents
United States Patent and Trademark Office
P.O. Box 1450
Alexandria, VA 22313-1450
www.uspto.gov

FEB - 3 2011

CARLSON, GASKEY & OLDS, P.C.
400 WEST MAPLE ROAD
SUITE 350
BIRMINGHAM MI 48009

In re application of Bradshaw et al. Application No. 12/865,602 Filed: November 15, 2010 For: AXIALLY DAMPED HYDRAULIC MOUNT ASSEMBLY	**DECISION ON REQUEST TO PARTICIPATE IN PATENT PROSECUTION HIGHWAY PROGRAM AND PETITION TO MAKE SPECIAL UNDER 37 CFR 1.102(a)**

This is a decision on the request to participate in the Patent Prosecution Highway (PPH) program and the petition under 37 CFR 1.102(a), filed November 15, 2010, to make the above-identified application special.

The request and petition are **GRANTED**.

A grantable request to participate in the PPH program and petition to make special require:

(1) The U.S. application must disclose an eligible relationship to one or more PCT applications filed in the KIPO, JPO, EPO or USPTO;
(2) Applicant must submit a copy of the allowable/patentable claim(s) from the PCT application(s) latest international work product (the written opinion or the IPER) along with an English translation thereof and a statement that the English translation is accurate;
(3) All the claims in the U.S. application must sufficiently correspond or be amended to sufficiently correspond to the allowable/patentable claim(s) in the PCT application(s);
(4) Examination of the U.S. application has not begun;
(5) Applicant must submit a copy of the latest international work product from the PCT application containing the allowable/patentable claim(s) along with an English translation thereof and a statement that the English translation is accurate;
(6) Applicant must submit an IDS listing the documents cited by the PCT examiner in the international work product along with copies of documents except U.S. patents or U.S. patent application publications.

In light of the petition being properly submitted via EFS-Web as is required, the request to participate in the PPH program complies with the above requirements, the above-identified application has been accorded "special" status.

All other inquiries concerning the examination or status of the application should be directed to the Patent Application Information Retrieval (PAIR) system.

The application is being forwarded to the examiner for action on the merits commensurate with this decision.

Any inquiry regarding this decision should be directed to Mikado Buiz, Quality Assurance Specialist, at (571) 272-6578.

/ Mikado Buiz /

Mikado Buiz,
Quality Assurance Specialist
Technology Center 3600

BM/BM: 2/2/11

UNITED STATES PATENT AND TRADEMARK OFFICE

Commissioner for Patents
United States Patent and Trademark Office
P.O. Box 1450
Alexandria, VA 22313-1450
www.uspto.gov

Akerman Senterfitt
P.O. Box 3188
West Palm Beach, FL 33402-3188

MAILED
APR 08 2011
PCT LEGAL ADMINISTRATION

In re Application of :
SIOLI et al. :
Application No.: 12/865,612 :
PCT No.: PCT/EP2009/000521 :
Int. Filing Date: 28 January 2009 :
Priority Date: 31 January 2008 :
Attorney Docket No.: 9526-165 (239967) :
For: HIGH PERFORMANCE CATHODES FOR WATER ELECTROLYSERS

DECISION ON PAPERS UNDER 37 CFR 1.43

This decision is issued in response to the declaration filed 14 March 2011, treated herein as a submission under 37 CFR 1.43. No petition fee is required.

BACKGROUND

On 28 January 2009, applicants filed international application PCT/EP2009/000521, which claimed a priority date of 31 January 2008. A copy of the international application was communicated to the United States Patent and Trademark Office from the International Bureau on 06 August 2009. Pursuant to 37 CFR 1.495, the deadline for payment of the basic national fee in the United States was to expire 30 months from the priority date, 31 July 2010.

On 30 July 2010, applicants filed a transmittal letter for entry into the national stage in the United States accompanied, inter alia, by: the basic national fee; a copy of the international application; and a preliminary amendment.

On 14 September 2010, the United States Designated/Elected Office (DO/EO/US) mailed a Notification of Missing Requirements (Form PCT/DO/EO/905) requiring an oath or declaration in compliance with 37 CFR 1.497 and the surcharge fee required under 37 CFR 1.492. The notification set a two-month time limit in which to respond.

On 14 March 2011, applicants filed the present request and declaration. The declaration is executed by Giancarlo Sioli and Patrizia Armini on behalf of the incapacitated inventor, Roberto Mattone.

DISCUSSION

35 USC 117 *Death or Incapacity of Inventor*, states:

Legal representatives of deceased inventors and of those under legal incapacity may make application for patent upon compliance with the requirements and on the same terms and conditions applicable to the inventor.

37 CFR 1.43 *When the Inventor is insane or legally incapacitated*, states, in part:

In case of the death of the inventor is insane or otherwise legally incapacitated, the legal representative (guardian, conservator, etc.) of such inventor may make the necessary oath or declaration, and apply for and obtain the patent

Counsel states that the declaration submitted on 14 March 2011 was executed by Patrizia Armini on behalf of the incapacitated inventor, Roberto Mattone. The declaration submitted appears to have been executed by the proper party under 37 CFR 1.43, however, the declaration does not satisfy the requirements under 37 CFR 1.497(b)(2).

In addition, it is noted that revised 37 CFR 1.497(b)(2) states the following:

> (2) If the person making the oath or declaration or any supplemental oath or declaration is not the inventor (§§ 1.42, 1.43, or § 1.47) the oath or declaration shall state the relationship of the person to the inventor, and, upon information and belief, the facts which the inventor would have been required to state. If the person signing is the legal representative of a deceased inventor, the oath or declaration shall also state that the person is a legal representative and the citizenship, residence, and mailing address of the legal representative.

Pursuant to revised 37 CFR 1.497(b)(2), in addition to the residence, citizenship, and post office address of the incapacitated inventor, the declaration must also provide this information (name, residence, citizenship, and post office address) for the signing legal representative. The declaration filed on 14 March 2011 provides the residence, citizenship, and post office address for only one individual and it is unclear whether this information is for Patrizia Armini or the incapacitated inventor. Accordingly, the declaration is not in compliance with 37 CFR 1.497(b)(2).

CONCLUSION

For the above reasons, the request for status under 37 CFR 1.43 is **REFUSED**.

Applicants are hereby afforded **TWO (2) MONTHS** from the mail date of this decision to file either 1) an oath or declaration in compliance with 37 CFR 1.497 (a)-(b)

signed by all inventors or 2) a renewed petition satisfying all requirements under 37 CFR 1.43. Any reconsideration request should include a cover letter entitled, "Renewed Request Under 37 CFR 1.43." No additional petition fee is required.

Any further correspondence with respect to this matter may be filed electronically via EFS-Web selecting the document description "Petition for review and processing by the PCT Legal Office" or by mail addressed to Mail Stop PCT, Commissioner for Patents, Office of PCT Legal Administration, P.O. Box 1450, Alexandria, Virginia 22313-1450, with the contents of the letter marked to the attention of the Office of PCT Legal Administration.

Anthony Smith
Attorney-Advisor
Office of PCT Legal Administration
Tel: (571) 272-3298
Fax: (571) 273-0459

UNITED STATES PATENT AND TRADEMARK OFFICE

Commissioner for Patents
United States Patent and Trademark Office
P.O. Box 1450
Alexandria, VA 22313-1450
www.uspto.gov

MAILED

JUL 12 2011

PCT LEGAL ADMINISTRATION

Akerman Senterfitt
P.O. Box 3188
West Palm Beach, FL 33402-3188

In re Application of :
SIOLI et al. :
Application No.: 12/865,612 :
PCT No.: PCT/EP2009/000521 :
Int. Filing Date: 28 January 2009 :
Priority Date: 31 January 2008 :
Attorney Docket No.: 9526-165 (239967) :
For: HIGH PERFORMANCE CATHODES FOR WATER ELECTROLYSERS

DECISION ON PAPERS UNDER 37 CFR 1.43

In a decision mailed by this Office on 08 April 2011, the declaration filed by applicant on behalf of incapacitated inventor Roberto Mattone was dismissed for failure to include all the information required under 37 CFR 1.497.

On 16 May 2011, applicant filed a response to the previous communication that was accompanied by a revised declaration. The declaration submitted on 16 May 2011 identifies the incapacitated inventor and states the incapacitated inventor's country of citizenship. Additionally, the declaration is signed by Patrizia Armini as "Legal Representative," states his/her relationship to the incapacitated (i.e., Legal Representative), and provides the Legal Representative's country of citizenship and residency. Accordingly, the declaration complies with the requirements of 37 CFR 1.497(b)(2) and 37 CFR 1.43.

The request for status under 37 CFR 1.43 is **GRANTED**.

The application will be forwarded to the National Stage Processing Branch of the Office of PCT Operations for further processing in accordance with this decision.

Anthony Smith
Attorney-Advisor
Office of PCT Legal Administration
Tel: (571) 272-3298
Fax: (571) 273-0459

19 AUG 2010

UNITED STATES PATENT AND TRADEMARK OFFICE

Commissioner for Patents
United States Patent and Trademark Office
P.O. Box 1450
Alexandria, VA 22313-1450
www.uspto.gov

Vierra Magen/Microsoft Corporation
575 Market Street, Suite 2500
San Francisco, CA 94105

In re Application of	:	
YAHAV et al.	:	
Application No.: 12/865,622	:	
PCT No.: PCT/IL2007/001572	:	DECISION ON PETITION
Int. Filing Date: 19 December 2007	:	UNDER 37 CFR 1.137(b)
Priority Date: None	:	
Attorney Docket No.: MSFT-01368US0	:	
For: AN IMAGE SENSOR AND A CONFIGURATION FOR IMPROVED SKEW TIME	:	

The petition to revive under 37 CFR 1.137(b) filed 30 July 2010 in the above-captioned application is hereby **GRANTED** as follows:

Applicant's statement that "the entire delay in filing the required reply from the due date for the reply until the filing of a grantable petition under 37 CFR 1.137(b) was unintentional" meets the requirements of 37 CFR 1.137(b)(3).

A review of the application file reveals that applicant has submitted the basic national fee and the requirements of 37 CFR 1.137(b) have been satisfied. Therefore, the request to revive the application abandoned under 35 U.S.C. 371(d) is granted as to the National stage in the United States of America.

This application is being returned to the United States Designated/Elected Office for processing in accordance with this decision.

Anthony Smith
Attorney-Advisor
Office of PCT Legal Administration
Tel: (571) 272-3298

13 AUG 2010

UNITED STATES PATENT AND TRADEMARK OFFICE

Commissioner for Patents
United States Patent and Trademark Office
P.O. Box 1450
Alexandria, VA 22313-1450
www.uspto.gov

THE WEBB LAW FIRM, P.C.
700 KOPPERS BUILDING
436 SEVENTH AVENUE
PITTSBURGH PA 15219

In re Application of SINHA et al.
Application No.: 12/865,623
PCT No.: PCT/IN08/00796
Int. Filing: 02 December 2008
Priority Date: 23 January 2008
Attorney Docket No.: 4544-102256
For: HUMANIZED HIGH AFFINITY RECOMBINANT ANTIBODY AGAINST HEPATITIS B SURFACE ANTIGEN

DECISION ON

PETITION TO REVIVE

UNDER 37 CFR 1.137(b)

The petition to revive under 37 CFR 1.137(b) filed 30 July 2010 in the above-captioned application is hereby **GRANTED** .

Applicant's statement that the"entire delay in filing the required reply from the due date for the required reply until the filing of a grantable petition under 37 CFR 1.137(b) was unintentional" meets the requirements of 37 CFR 1.137(b)(3).

A review of the application file reveals that the petition fee of $1620 has been paid and the basic national fee of $330 was provided. Thus, the requirements of 37 CFR 1.137(b) have been satisfied. Therefore, the request to revive the application abandoned under 35 U.S.C. 371(d) is granted as to the National stage in the United States of America.

This application is being forwarded to the United States Designated/Elected Office for further processing, including issuance of a Notification of Missing Requirements indicating that an oath or declaration, in compliance with 37 CFR 1.497(a) and (b), is required.

/Cynthia M. Kratz/
Cynthia M. Kratz
Attorney Advisor
PCT Legal Office
Office of PCT Legal Administration
Telephone: 571-272-3286

UNITED STATES PATENT AND TRADEMARK OFFICE

Commissioner for Patents
United States Patent and Trademark Office
Washington, D.C. 20231
www.uspto.gov

WITHROW & TERRANOVA, P.L.L.C.
100 REGENCY FOREST DRIVE
SUITE 160
CARY NC 27518

MAILED
FEB 24 2011
PCT LEGAL ADMINISTRATION

In re Application of :
TONG, et al. : DECISION ON PETITION
Serial No.: 12/865,627 :
PCT No.: PCT/CA2008/000203 : UNDER 37 CFR 1.47(a)
Int. Filing Date: 01 February 2008 :
Priority Date: None :
Atty Docket No.: 7000-608-2A :
For: SYSTEM AND METHOD FOR SPATIAL MULTIPLEXING-BASED MULTIPLE ANTENNA BROADCAST/MULTICAST TRANSMISSION :

This decision is in response to the petition under 37 CFR 1.47(a) filed 28 January 2011 to accept the application without the signature of joint inventor Mo-Han Fong.

BACKGROUND

On 01 February 2008, applicant filed international application PCT/CA2008/000203. Pursuant to 37 CFR 1.495 the period for providing payment of the full, U.S. Basic National Fee was set to expire thirty months from the priority date, or midnight 01 August 2010.

On 30 July 2010, applicant filed a transmittal letter for entry into the national stage in the United States, which was accompanied by the requisite basic national fee as required by 35 U.S.C. 371(c)(1); an Information Disclosure Statement and an Application Data Sheet.

On 28 September 2010, applicant was mailed a "Notification of Missing Requirements" (Form PCT/DO/EO/905) indicating that an executed oath or declaration of the inventors was required. Applicant was afforded two months to file a proper response.

On 28 January 2011, applicant filed the present petition under 37 CFR 1.47(a) accompanied by a petition for a two-month extension of time and payment of the appropriate extension fee. Therefore, applicant's response is considered timely filed.

DISCUSSION

A petition under 37 CFR 1.47(a) must be accompanied by (1) the fee under 37 CFR 1.17(g), (2) factual proof that the missing joint investor refuses to execute the application or

cannot be reached after diligent effort, (3) a statement of the last known address of the missing inventor, and (4) an oath or declaration by each 37 CFR 1.47(a) applicant on his or her own behalf and on behalf of the non-signing joint inventor. Applicant has satisfied items 1-3.

Regarding item 4, applicant has provided a declaration executed by the remaining inventors. However, the declaration is not in compliance with 37 CFR 1.497 (a)-(b). Manual of Patent Examining Procedure (MPEP) Section 201.03 explains:

> An oath or declaration under 37 CFR 1.63 by each actual inventor must be presented. While each inventor need not execute the same oath or declaration, each oath or declaration executed by an inventor must contain a complete listing of all inventors so as to clearly indicate what each inventor believes to be the appropriate inventive entity. Where individual declarations are executed, they must be submitted as individual declarations rather than combined into one declaration.

The filed declaration contains two pages listed as "1 of 2." One signed by inventor Ma and one signed by inventor Zhu. . As such, it appears that the inventors were not provided with complete declarations for signature or only returned the signature pages. Either scenario renders the documents non-compliant.

In light of the above, it is not possible to grant applicant's petition at this time.

CONCLUSION

For the reasons stated above, applicant's petition under 37 CFR 1.47(a) is **DISMISSED**.

Any reconsideration on the merits of this petition must be filed within **TWO (2) MONTHS** from the mail date of this decision. Any reconsideration request should include a cover letter entitled "Renewed Petition Under 37 CFR 1.47(a)." No additional petition fee is required. Extensions of time may be obtained under 37 CFR 1.136(a).

Any further correspondence with respect to this matter should be directed to Mail Stop PCT, Commissioner for Patents, Office of PCT Legal Administration, P.O. Box 1450, Alexandria, Virginia 22313-1450, with the contents of the letter marked to the attention of the Office of PCT Legal Administration or electronically filed utilizing the USPTO's EFS-Web electronic filing system.

Derek A. Putonen
Attorney Advisor
Office of PCT Legal Administration
Tel: 571-272-3294

UNITED STATES PATENT AND TRADEMARK OFFICE

Commissioner for Patents
United States Patent and Trademark Office
Washington, D.C. 20231
www.uspto.gov

MAILED

JUN 15 2011

PCT LEGAL ADMINISTRATION

WITHROW & TERRANOVA, P.L.L.C.
100 REGENCY FOREST DRIVE
SUITE 160
CARY NC 27518

In re Application of
TONG, et al.
Serial No.: 12/865,627
PCT No.: PCT/CA2008/000203
Int. Filing Date: 01 February 2008
Priority Date: None
Atty Docket No.: 7000-608-2A
For: SYSTEM AND METHOD FOR SPATIAL MULTIPLEXING-BASED MULTIPLE ANTENNA BROADCAST/MULTICAST TRANSMISSION

DECISION ON PETITION

UNDER 37 CFR 1.47(a)

This decision is in response to applicant's renewed petition under 37 CFR 1.47(a) filed 24 May 2011 in the United States Patent and Trademark Office (USPTO).

BACKGROUND

On 24 February 2011, applicant was mailed a decision dismissing applicant's petition under 37 CFR 1.47(a). Applicant was afforded two months to file any request for reconsideration and advised that this period could be extended pursuant to 37 CFR 1.136(a).

On 24 May 2011, applicant filed the present renewed petition under 37 CFR 1.47(a) accompanied by a petition for a one-month extension of time. The response is timely filed.

DISCUSSION

As detailed in the decision mailed 24 February 2011, a petition under 37 CFR 1.47(a) must be accompanied by (1) the fee under 37 CFR 1.17(g), (2) factual proof that the missing joint investor refuses to execute the application or cannot be reached after diligent effort, (3) a statement of the last known address of the missing inventor, and (4) an oath or declaration by each 37 CFR 1.47(a) applicant on his or her own behalf and on behalf of the non-signing joint inventor. Applicant previously satisfied items 1 through 3.

With the filing of the renewed petition and supporting exhibits, applicant has satisfied the remaining item and it is proper to grant applicant's renewed petition at this time.

CONCLUSION

For the reasons discussed above, applicant's renewed petition under 37 CFR 1.47(a) is **GRANTED**.

The application has an international filing date of 01 February 2008 under 35 U.S.C. 363, and will be given a date of **24 May 2011** under 35 U.S.C. 371(c)(1), (c)(2) and (c)(4).

As provided in 37 CFR 1.47(c), a notice of the filing of this application will be forwarded to the non-signing inventors at their last known addresses of record. A notice of the filing of the application under 37 CFR 1.47(a) will be published in the Official Gazette.

This application is being returned to the DO/EO/US for processing in accordance with this decision.

Derek A. Putonen
Attorney Advisor
Office of PCT Legal Administration
Tel: 571-272-3294

UNITED STATES PATENT AND TRADEMARK OFFICE

Commissioner for Patents
United States Patent and Trademark Office
P.O. Box 1450
Alexandria, VA 22313-1450
www.uspto.gov

Mo-Han Fong
95 Beech Street, Apt. 205
Ottawa, Ontario, K1S 3J7
CANADA

MAILED
JUN 15 2011
PCT LEGAL ADMINISTRATION

In re Application of
TONG, et al.
Serial No.: 12/865,627
PCT No.: PCT/CA2008/000203
Int. Filing Date: 01 February 2008
Priority Date: None
Atty Docket No.: 7000-608-2A
For: SYSTEM AND METHOD FOR SPATIAL MULTIPLEXING-BASED MULTIPLE ANTENNA BROADCAST/MULTICAST TRANSMISSION

Dear Ms. Fong:

You are named as an inventor in the above identified United States patent application, filed under the provisions of 37 CFR 1.47(a) and 35 U.S.C. 116. Should a patent be granted, you will be designated as an inventor. As a named inventor, you are entitled to inspect any paper in the file wrapper of the application, order copies of all or any part thereof (at a prepaid cost per 37 CFR 1.19) or to make your position of record in the application. Alternately, you may arrange to do any of the preceding through a registered patent agent or attorney presenting written authorization from you. If you care to join in the application, the law firm of record (see below) would presumably assist you. Joining in the application would entail the filing of the appropriate oath or declaration by you pursuant to 37 CFR 1.63.

Derek A. Putonen
Attorney Advisor
Office of PCT Legal Administration
Tel: (571) 272-3294

Counsel of record:
WITHROW & TERRANOVA, P.L.L.C.
100 REGENCY FOREST DRIVE
SUITE 160
CARY NC 27518
UNITED STATES OF AMERICA

UNITED STATES PATENT AND TRADEMARK OFFICE

COMMISSIONER FOR PATENTS
UNITED STATES PATENT AND TRADEMARK OFFICE
P.O. BOX 1450
ALEXANDRIA, VA 22313-1450
www.uspto.gov

TOWNSEND AND TOWNSEND AND CREW, LLP
TWO EMBARCADERO CENTER
EIGHTH FLOOR
SAN FRANCISCO, CA 94111-3834

MAILED
OCT 08 2010
PCT LEGAL ADMINISTRATION

In re Application of BROOKS et al :
U.S. Application No.: 12/865,628 :
PCT Application No.: PCT/US2008/072452 :
Int. Filing Date: 07 August 2008 :
Priority Date Claimed: 08 August 2008 : DECISION
Attorney Docket No.: 027166-000410US :
For: SINGLE TRIPHENYLENE :
CHROMOPHORES IN PHOSPHORESCENT :
LIGHT EMITTING DIODES :

This is in response to applicant's "Petition for Revival of an International Application for Patent Designating the U.S. Abandoned Unintentionally Under 37 CFR 1.137(b)" filed 30 July 2010.

BACKGROUND

On 07 August 2008, applicant filed international application PCT/US2008/072452, which claimed priority of an earlier United States application filed 08 August 2008. The thirty-month period for paying the basic national fee in the United States expired on 08 February 2010.

On 09 February 2010, international application PCT/US2008/072452 became abandoned as to the United States for failure to timely pay the basic national fee.

On 30 July 2010, applicant filed the present petition under 37 CFR 1.137(b).

DISCUSSION

Under 37 CFR 1.137(b), a petition requesting that an application be revived on the grounds of unintentional abandonment must be accompanied by: (1) the required reply unless previously filed, (2) the petition fee as set forth in 37 CFR 1.17(m), (3) a statement that the entire delay in filing the required reply from the due date for the reply until the filing of a grantable petition was unintentional, and (4) a terminal disclaimer if the application was filed before 08 June 1995.

With regard to item (1), applicant has provided the required reply under 35 U.S.C. 371.

With regard to item (2), applicant has provided the required petition fee.

With regard to item (3), applicant has provided the required statement.

With regard to item (4), because the international application was filed after 08 June 1995, no terminal disclaimer is required.

CONCLUSION

For the reasons above, the petition under 37 CFR 1.137(b) is GRANTED.

This application is being forwarded to the United States Designated/Elected Office (DO/EO/US) for further processing in accordance with this decision, including preparation and mailing of a Notification of Missing Requirements under 35 U.S.C. 371 (Form PCT/DO/EO/905) indicating that an oath or declaration in compliance with 37 CFR 1.497 must be filed.

Bryan Lin

Bryan Lin
PCT Legal Examiner
PCT Legal Office

Telephone: 571-272-3303
Facsimile: 571-273-0459

BABCOCK IP
INTELLECTUAL PROPERTY LAW

PATENT

IN THE UNITED STATES PATENT AND TRADEMARK OFFICE

Applicant:	John Curran	Examiner:	Lee W. Young
Serial No.:	12/865,654	Art Unit:	2821
Filed:	07/30/2010		
For:	Reflector Antenna Feed RF Seal		
Docket Number:	10059		
Confirmation No.:	4551		

RESPONSE TO PPH PETITION DISMISSAL

Commissioner of Patents
P.O. Box 1450
Alexandria, VA 22313-1450

October 20, 2010

Sir:

An Office communication Dated October 14, 2010 dismissed Applicant's Request to participate in the PCT Patent Prosecution Highway. The dismissal indicated that the cited deficiencies could be rectified by submitting the requested items.

Please find attached a copy of the claims from PCT/IB2009/054921, each indicated as having novelty, inventive step and industrial applicability by the ISA/KR. These claims directly correspond to the claims of the present application. A replacement IDS citing EP 0817307 and a copy thereof are also attached.

Please now reconsider the dismissal of Applicant's PCT-PPH request.

Respectfully submitted,

/Andrew Babcock, Reg. # 44517/

Andrew Babcock, Esq.
Attorney for Applicant
Registration Number 44517

/Encl: Claims from PCT/IB2009/054921, replacement IDS and copy of EP 0817307

COURIER ADDRESS:
BABCOCK IP, PLLC
4934 WILDWOOD DRIVE
BRIDGMAN, MI 49106 USA

POSTAL ADDRESS:
BABCOCK IP, PLLC
PO BOX 488
BRIDGMAN, MI 49106 USA

ONLINE CONTACT:
WWW.BABCOCKIP.COM
EMAIL@BABCOCKIP.COM

TELEPHONE & FAX:
T: 269.465.6603
F: 269.465.6431

PCT/IB2009/054921 Claims

We claim:

1. A reflector antenna feed RF seal between an antenna base, a feed hub and a vertex plate, comprising:

   a gasket of compressible material adapted to seat around an outer diameter of the feed hub;

   the gasket having an outer diameter greater than a diameter of a joint between the feed hub and the antenna base and less than an outer diameter of the vertex plate;

   the gasket compressed within a cavity formed between the antenna base, the feed hub and the vertex plate as the feed hub is seated within the antenna base.

2. The RF seal of claim 1, wherein the gasket is a compressible conductive material.

3. The RF seal of claim 1, wherein the gasket is a compressible RF absorbing material.

4. The RF seal of claim 1, wherein the gasket is a compressible material coated with an RF absorbing material.

5. The RF seal of claim 1, wherein the gasket is a compressible material coated with a conductive material.

6. The RF seal of claim 1, wherein the gasket is a urethane foam with a gradient lossy coating.

7. The RF seal of claim 1, wherein a junction between a main reflector and the antenna base, within the cavity, has a diameter less than the outer diameter of the gasket, whereby the gasket covers the junction.

8. The RF seal of claim 1, wherein the gasket compresses primarily in a direction parallel to a longitudinal axis of a feed coupled to the feed hub.

9. The RF seal of claim 1, wherein the gasket is annular.

10. A method for assembling a reflector antenna feed RF seal between an antenna base, a feed hub and a vertex plate, comprising the steps of:
placing a generally annular gasket of compressible material around an outer diameter of the feed hub;
inserting the feed hub into the antenna base, thereby compressing the gasket within a cavity between the antenna base, the feed hub and the vertex plate as the feed hub is inserted within the antenna base;
the gasket covering a joint between the feed hub and the antenna base.

11. The method of claim 10, wherein the gasket also covers a junction between a main reflector and the antenna base, within the cavity.

12. The method of claim 10, wherein the gasket is dimensioned to compress within the cavity, without extending beyond an outer diameter of the vertex plate.

13. The method of claim 10, wherein the gasket is urethane foam with a gradient lossy coating.

14. A reflector antenna feed RF seal between an antenna base, a feed hub and a vertex plate, comprising:
a generally annular gasket of urethane foam with a gradient lossy coating adapted to seat around an outer diameter of the feed hub;
the gasket having an outer diameter greater than a diameter of a joint between the feed hub and the antenna base and less than an outer diameter of the vertex plate;
the gasket compressed within a cavity between the antenna base, the feed hub and the vertex plate as the feed hub is seated within the antenna base;
wherein a junction between a main reflector and the antenna base, within the cavity, has a diameter less than the outer diameter of the gasket, whereby the gasket covers the joint and the junction.

15. A reflector antenna, comprising:

a feed hub joined to an antenna base along a joint;

a vertex plate coupled to the feed hub;

a gasket of compressible material adapted to seat around an outer diameter of the feed hub;

the gasket having an outer diameter greater than a diameter of the joint and less than an outer diameter of the vertex plate;

the gasket compressed within a cavity formed between the antenna base, the feed hub and the vertex plate as the feed hub is joined with the antenna base.

16. The RF seal of claim 15, wherein the gasket is a compressible RF absorbing material.

17. The RF seal of claim 15, wherein the gasket is a urethane foam with a gradient lossy coating.

18. The RF seal of claim 15, wherein a junction between a main reflector and the antenna base, within the cavity, has a diameter less than the outer diameter of the gasket, whereby the gasket covers the junction.

19. The RF seal of claim 15, wherein the gasket compresses primarily in a direction parallel to a longitudinal axis of a feed coupled to the feed hub.

20. The RF seal of claim 15, wherein the gasket is annular.

UNITED STATES PATENT AND TRADEMARK OFFICE

UNITED STATES DEPARTMENT OF COMMERCE
United States Patent and Trademark Office
Address: COMMISSIONER FOR PATENTS
P.O. Box 1450
Alexandria, Virginia 22313-1450
www.uspto.gov

APPLICATION NO.	FILING DATE	FIRST NAMED INVENTOR	ATTORNEY DOCKET NO.	CONFIRMATION NO.
12/865,654	07/30/2010	John Curran	10059	4551

78847 7590 10/14/2010
Babcock IP, PLLC
P.O. Box 488
Bridgman, MI 49106

EXAMINER

ART UNIT	PAPER NUMBER
2821	

MAIL DATE	DELIVERY MODE
10/14/2010	PAPER

Please find below and/or attached an Office communication concerning this application or proceeding.

The time period for reply, if any, is set in the attached communication.

UNITED STATES PATENT AND TRADEMARK OFFICE

Commissioner for Patents
United States Patent and Trademark Office
P.O. Box 1450
Alexandria, VA 22313-1450
www.uspto.gov

BABCOCK IP, PLLC
P.O.BOX 488
BRIDGMAN MI 49106

In re Application of	
CURRAN et al.	**: DECISION ON REQUEST TO**
Application No.: 12/865,654	**: PARTICIPATE IN THE PCT PATENT**
Filed: 30 July 2010	**: PROSECUTION HIGHWAY PILOT**
Attorney Docket No.: 10059	**: PROGRAM AND PETITION**
For: REFLECTOR ANTENNA FEED	**: TO MAKE SPECIAL UNDER**
RF SEAL	**: 37 CFR 1.102(d)**

This is a decision on the request to participate in the PCT Patent Prosecution Highway (PCT-PPH) pilot program and the petition under 37 CFR 1.102(a), filed 30 July 2010, to make the above-identified application special.

The request and petition are **DISMISSED**.

Discussion

A grantable request to participate in the PCT-PPH pilot program and petition to make special require:

(1) The U.S. application must disclose an eligible relationship to one or more PCT applications where the ISA or IPEA are the JPO, EPO, KIPO, or USPTO;

(2) At least one claim in the PCT application has novelty, inventive step, and industrial applicability and must be free of any observations in Box VIII in the latest work product in the international stage or applicant must identify and explain why the claim(s) is/are not subject to the observation in Box VIII;

(3) Applicant must submit a copy of the claim(s) from the PCT application(s) that have novelty, inventive step, and industrial applicability along with an English translation thereof and a statement that the English translation is accurate, if the claims are not in the English language;

(4) All the claims in the U.S. application must sufficiently correspond or be amended to sufficiently correspond to the claim(s) that have novelty, inventive step, and industrial applicability in the PCT application(s);

(5) Examination of the U.S. application has not begun;

(6) Applicant must submit a copy of the latest international work product from the PCT application indicating that the claim(s) have novelty, inventive step, and industrial applicability along with an English translation thereof and a statement that the English translation is accurate

if the latest international work product is not in the English language;

(7) Applicant must submit an IDS listing the documents cited by the PCT examiner in the international work product along with copies of documents except U.S. patents or U.S. patent application publications.

Conditions (1-2) and (5-6) above are considered to have been met. However, the request to participate in the PPH pilot program and petition fails meet condition (3) and (7).

Regarding the requirement of condition (3), applicant has failed to submit a copy of the claims from the PCT application that have novelty, inventive step, and industrial applicability along with an English translation thereof and a statement that the English translation is accurate, if the claims are not in the English language.

Regarding the requirement of condition (4), since no copy of the PCT claims has been submitted it cannot be determined if the claims of the instant application sufficiently correspond.

Regarding the requirement of condition (7), applicant has failed to submit an IDS listing all the documents cited by the PCT examiner in the international work product along with copies of documents except U.S. patents or U.S. patent application publications. Specifically, applicant has not cited EP 0817307 or provide a copy thereof.

Applicant is given **ONE** opportunity within a time period of **ONE MONTH or THIRTY DAYS**, whichever is longer, from the mailing date of this decision to correct the deficiencies. **NO EXTENSION OF TIME UNDER 37 CFR 1.136 IS PERMITTED.** If the deficiencies are not corrected with the time period given, the application will await action in its regular turn.

Response must be filed via the Electronic Filing System (EFS) with the Document Code PPH.PCT.652. Any preliminary amendments and IDS submitted with the PPH documents must be separately indexed as a preliminary amendment and IDS, respectively.

Telephone inquiries concerning this decision should be directed to Lee W. Young at 571-272-4549.

All other inquiries concerning the examination or status of the application is accessible in the PAIR system at http://www.uspto.gov/ebc/index.html.

Lee W. Young
TQAS Technology Center 2800 - Semiconductors,
Electrical & Optical Systems & Components

UNITED STATES PATENT AND TRADEMARK OFFICE

UNITED STATES DEPARTMENT OF COMMERCE
United States Patent and Trademark Office
Address: COMMISSIONER FOR PATENTS
P.O. Box 1450
Alexandria, Virginia 22313-1450
www.uspto.gov

APPLICATION NO.	FILING DATE	FIRST NAMED INVENTOR	ATTORNEY DOCKET NO.	CONFIRMATION NO.
12/865,654	07/30/2010	John Curran	10059	4551

78847 7590 11/08/2010
Babcock IP, PLLC
P.O. Box 488
Bridgman, MI 49106

EXAMINER

ART UNIT	PAPER NUMBER
2821	

MAIL DATE	DELIVERY MODE
11/08/2010	PAPER

Please find below and/or attached an Office communication concerning this application or proceeding.

The time period for reply, if any, is set in the attached communication.

UNITED STATES PATENT AND TRADEMARK OFFICE

Commissioner for Patents
United States Patent and Trademark Office
P.O. Box 1450
Alexandria, VA 22313-1450
www.uspto.gov

BABCOCK IP, PLLC
P.O.BOX 488
BRIDGMAN MI 49106

In re Application of	
CURRAN et al.	**: DECISION ON REQUEST TO**
Application No.: 12/865,654	**: PARTICIPATE IN THE PCT PATENT**
Filed: 30 July 2010	**: PROSECUTION HIGHWAY PILOT**
Attorney Docket No.: 10059	**: PROGRAM AND PETITION**
For: REFLECTOR ANTENNA FEED	**: TO MAKE SPECIAL UNDER**
RF SEAL	**: 37 CFR 1.102(d)**

This is a decision on the request to participate in the PCT Patent Prosecution Highway (PCT-PPH) pilot program and the petition under 37 CFR 1.102(a), filed 30 July 2010 and renewed on 20 October 2010, to make the above-identified application special.

The request and petition are **GRANTED**.

Discussion

A grantable request to participate in the PCT-PPH pilot program and petition to make special require:

(1) The U.S. application must disclose an eligible relationship to one or more PCT applications where the ISA or IPEA are the JPO, EPO, KIPO, or USPTO;

(2) At least one claim in the PCT application has novelty, inventive step, and industrial applicability and must be free of any observations in Box VIII in the latest work product in the international stage or applicant must identify and explain why the claim(s) is/are not subject to the observation in Box VIII;

(3) Applicant must submit a copy of the claim(s) from the PCT application(s) that have novelty, inventive step, and industrial applicability along with an English translation thereof and a statement that the English translation is accurate, if the claims are not in the English language;

(4) All the claims in the U.S. application must sufficiently correspond or be amended to sufficiently correspond to the claim(s) that have novelty, inventive step, and industrial applicability in the PCT application(s);

(5) Examination of the U.S. application has not begun;

(6) Applicant must submit a copy of the latest international work product from the PCT application indicating that the claim(s) have novelty, inventive step, and industrial applicability along with an English translation thereof and a statement that the English translation is accurate

if the latest international work product is not in the English language;

(7) Applicant must submit an IDS listing the documents cited by the PCT examiner in the international work product along with copies of documents except U.S. patents or U.S. patent application publications.

The request to participate in the PCT-PPH pilot program and petition comply with the above requirements. Accordingly, the above-identified application has been accorded "special" status.

Telephone inquiries concerning this decision should be directed to Lee W. Young at 571-272-4549.

All other inquiries concerning the examination or status of the application is accessible in the PAIR system at http://www.uspto.gov/ebc.index.html.

This application will be forwarded to the examiner for action on the merits commensurate with this decision once this application's formality reviews have been completed.

Lee W. Young
TQAS Technology Center 2800 - Semiconductors,
Electrical & Optical Systems & Components

PTO/SB/20PCT-EP (05-10)
Approved for use through 01/31/2012. OMB 0651-0058
U.S. Patent and Trademark Office; U. S. DEPARTMENT OF COMMERCE
Under the Paperwork Reduction Act of 1995, no persons are required to respond to a collection of information unless it displays a valid OMB control number.

REQUEST FOR PARTICIPATION IN THE PATENT COOPERATION TREATY - PATENT PROSECUTION HIGHWAY (PCT-PPH) PILOT PROGRAM BETWEEN THE EUROPEAN PATENT OFFICE (EPO) AND THE USPTO

Application No:	12/865,664	Filing date:	July 30, 2010
First Named Inventor:	Manfred Boeck		
Title of the Invention:	METHOD FOR PRODUCING ALKYL CHLOROSILANES FROM THE RESIDUES OF THE DIRECT SYNTHESIS OF ALKYL CHLOROSILANES		

THIS REQUEST FOR PARTICIPATION IN THE PCT-PPH PILOT PROGRAM ALONG WITH THE REQUIRED DOCUMENTS MUST BE SUBMITTED VIA EFS-WEB. INFORMATION REGARDING EFS-WEB IS AVAILABLE AT HTTP://WWW.USPTO.GOV/EBC/EFS_HELP.HTML

APPLICANT HEREBY REQUESTS PARTICIPATION IN THE PCT-PPH PROGRAM AND PETITIONS TO MAKE THE ABOVE-IDENTIFIED APPLICATION SPECIAL UNDER THE PCT-PPH PROGRAM.

The above-identified application is (1) a national stage entry of the corresponding PCT application, or (2) a national stage entry of another PCT application which claims priority to the corresponding PCT application, or (3) a national application that claims domestic/ foreign priority to the corresponding PCT application, or (4) a national application which forms the basis for the priority claim in the corresponding PCT application, or (5) a continuing application of a U.S. application that satisfies one of (1) to (4) above, or (6) a U.S. application that claims domestic benefit to a U.S. provisional application which forms the basis for the priority claim in the corresponding PCT application.

The corresponding PCT application number(s) is/are: PCT/EP2009/051771

The international filing date of the corresponding PCT application(s) is/are: February 16, 2009

I. List of Required Documents:

a. **A copy of the latest international work product (WO/ISA, WO/IPEA, or IPER) in the above–identified corresponding PCT application(s)**

- [x] Is attached
- [ ] Is not attached because the document is already in the U.S. application.

b. **A copy of all claims which were indicated as having novelty, inventive step and industrial applicability in the above-identified corresponding PCT application(s).**

- [x] Is attached.
- [ ] Is not attached because the document is already in the U.S. application.

c. **English translations of the documents in a. and b. above are attached (if the documents are not in the English language). A statement that the English translation is accurate is attached for the document in b. above.**

This collection of information is required by 35 U.S.C. 119, 37 CFR 1.55, and 37 CFR 1.102(d). The information is required to obtain or retain a benefit by the public, which is to file (and by the USPTO to process) an application. Confidentiality is governed by 35 U.S.C. 122 and 37 CFR 1.11 and 1.14. This collection is estimated to take 2 hours to complete, including gathering, preparing, and submitting the completed application form to the USPTO. Time will vary depending upon the individual case. Any comments on the amount of time you require to complete this form and/or suggestions for reducing this burden should be sent to the Chief Information Officer, U.S. Patent and Trademark Office, U.S. Department of Commerce, P.O. Box 1450, Alexandria, VA 22313-1450. DO NOT SEND FEES OR COMPLETED FORMS TO THIS ADDRESS.

Approved for use through 01/31/2012. OMB 0651-0058
U.S.Patent and Trademark Office; U.S. DEPARTMENT OF COMMERCE

Under the Paperwork Reduction Act of 1995, no persons are required to respond to a collection of information unless it displays a valid OMB control number.

REQUEST FOR PARTICIPATION IN THE PCT-PPH PILOT PROGRAM BETWEEN THE EPO AND THE USPTO

(continued)

Application No.:	12/865,664
First Named Inventor:	Manfred Boeck

d. **(1) An information disclosure statement listing the documents cited in the international work products (ISR, WO/ISA, WO/IPEA, IPER) of the corresponding PCT application.**

☐ Is attached

☒ Has already been filed in the above-identified U.S. application on September 28, 2010

(2) Copies of all documents (except) for U.S. patents or U.S. patent application publications)

☐ Are attached.

☒ Have already been filed in the above-identified U.S. application on September 28, 2010

II. Claims Correspondence Table:

Claims in US Application	Patentable Claims in the corresponding PCT Application	Explanation regarding the correspondence
6	1	Rewritten in U.S. format
7	1	Dependent upon claim 6
8	2	Rewritten in U.S. format
9	3	Rewritten in U.S. format
10	4	amended to remove multiple dependency
11	5	amended to remove multiple dependency
12	1	Further limits claim 9
13	1	Further limits claim 9
14	1	Further limits claim 9
15	1	Further limits claim 9

III. All the claims in the US application sufficiently correspond to the patentable claims in the corresponding PCT application.

Signature /William G. Conger/	Date February 16, 2011
Name (Print/Typed) William G. Conger	Registration Number 31209

Privacy Act Statement

The **Privacy Act of 1974 (P.L. 93-579)** requires that you be given certain information in connection with your submission of the attached form related to a patent application or patent. Accordingly, pursuant to the requirements of the Act, please be advised that: (1) the general authority for the collection of this information is 35 U.S.C. 2(b)(2); (2) furnishing of the information solicited is voluntary; and (3) the principal purpose for which the information is used by the U.S. Patent and Trademark Office is to process and/or examine your submission related to a patent application or patent. If you do not furnish the requested information, the U.S. Patent and Trademark Office may not be able to process and/or examine your submission, which may result in termination of proceedings or abandonment of the application or expiration of the patent.

The information provided by you in this form will be subject to the following routine uses:

1. The information on this form will be treated confidentially to the extent allowed under the Freedom of Information Act (5 U.S.C. 552) and the Privacy Act (5 U.S.C 552a). Records from this system of records may be disclosed to the Department of Justice to determine whether disclosure of these records is required by the Freedom of Information Act.
2. A record from this system of records may be disclosed, as a routine use, in the course of presenting evidence to a court, magistrate, or administrative tribunal, including disclosures to opposing counsel in the course of settlement negotiations.
3. A record in this system of records may be disclosed, as a routine use, to a Member of Congress submitting a request involving an individual, to whom the record pertains, when the individual has requested assistance from the Member with respect to the subject matter of the record.
4. A record in this system of records may be disclosed, as a routine use, to a contractor of the Agency having need for the information in order to perform a contract. Recipients of information shall be required to comply with the requirements of the Privacy Act of 1974, as amended, pursuant to 5 U.S.C. 552a(m).
5. A record related to an International Application filed under the Patent Cooperation Treaty in this system of records may be disclosed, as a routine use, to the International Bureau of the World Intellectual Property Organization, pursuant to the Patent Cooperation Treaty.
6. A record in this system of records may be disclosed, as a routine use, to another federal agency for purposes of National Security review (35 U.S.C. 181) and for review pursuant to the Atomic Energy Act (42 U.S.C. 218(c)).
7. A record from this system of records may be disclosed, as a routine use, to the Administrator, General Services, or his/her designee, during an inspection of records conducted by GSA as part of that agency's responsibility to recommend improvements in records management practices and programs, under authority of 44 U.S.C. 2904 and 2906. Such disclosure shall be made in accordance with the GSA regulations governing inspection of records for this purpose, and any other relevant (*i.e.*, GSA or Commerce) directive. Such disclosure shall not be used to make determinations about individuals.
8. A record from this system of records may be disclosed, as a routine use, to the public after either publication of the application pursuant to 35 U.S.C. 122(b) or issuance of a patent pursuant to 35 U.S.C. 151. Further, a record may be disclosed, subject to the limitations of 37 CFR 1.14, as a routine use, to the public if the record was filed in an application which became abandoned or in which the proceedings were terminated and which application is referenced by either a published application, an application open to public inspection or an issued patent.
9. A record from this system of records may be disclosed, as a routine use, to a Federal, State, or local law enforcement agency, if the USPTO becomes aware of a violation or potential violation of law or regulation.

UNITED STATES PATENT AND TRADEMARK OFFICE

UNITED STATES DEPARTMENT OF COMMERCE
United States Patent and Trademark Office
Address: COMMISSIONER FOR PATENTS
P.O. Box 1450
Alexandria, Virginia 22313-1450
www.uspto.gov

APPLICATION NO.	FILING DATE	FIRST NAMED INVENTOR	ATTORNEY DOCKET NO.	CONFIRMATION NO.
12/865,664	07/30/2010	Manfred Boeck	WAS1084PUSA	4650

22045 7590 05/10/2011
BROOKS KUSHMAN P.C.
1000 TOWN CENTER
TWENTY-SECOND FLOOR
SOUTHFIELD, MI 48075

EXAMINER

ART UNIT	PAPER NUMBER
1621	

MAIL DATE	DELIVERY MODE
05/10/2011	PAPER

Please find below and/or attached an Office communication concerning this application or proceeding.

The time period for reply, if any, is set in the attached communication.

UNITED STATES PATENT AND TRADEMARK OFFICE

Commissioner for Patents
United States Patent and Trademark Office
P.O. Box 1450
Alexandria, VA 22313-1450
www.uspto.gov

BROOKS KUSHMAN P.C.
1000 TOWN CENTER
22ND FLOOR
SOUTHFIELD, MI 48075

MAY 10 2011

In re Application of	:	DECISION ON REQUEST TO
BOECK ET AL.	:	PARTICIPATE IN PATENT
Application No. 12/865,664	:	PROSECUTION HIGHWAY
Filed: July 30, 2010	:	PROGRAM AND PETITION
Attorney Docket No. WAS1084PUSA	:	TO MAKE SPECIAL UNDER
	:	37 CFR 1.102(a)

This is a decision on the request to participate in the Patent Cooperation Treaty - Patent Prosecution Highway (PCT-PPH) program and the petition under 37 CFR 1.102(a), filed February 18, 2011, to make the above-identified application special.

The request and petition are **GRANTED**.

A grantable request to participate in the PCT-PPH program and petition to make special require:

(1) The U.S. application is (1) a national stage entry of the corresponding PCT application, or (2) a national stage entry of another PCT application which claims priority to the corresponding PCT application, or (3) a national stage application that claims domestic/foreign priority to the corresponding PCT application, or (4) a national application which forms the basis for the priority claim in the corresponding PCT application, or (5) a continuing application of a U.S. application that satisfies one of (1) to (4) above, or (6) a U.S. application that claims domestic benefit to a U.S. provisional application which forms the basis for the priority claim in the corresponding PCT application;
(2) The latest work product in the international phase of the PCT application corresponding to the U.S. application, namely the WO/ISA, or the WO/IPEA, or the IPER, indicates at least one claim in the PCT application has novelty, inventive step and industrial applicability;
(3) All the claims in the U.S. application must sufficiently correspond or be amended to sufficiently correspond to one or more of those claims indicated as having novelty, inventive step and industrial applicability and free of any observation described in Box VIII in the latest work product of the corresponding PCT application;
(4) Examination of the U.S. application has not begun;
(5) Applicant must submit a copy of latest international work product, WO/ISA, or WO/IPEA or IPER, which indicated that the claim(s) has/have novelty, inventive step and industrial applicability along with an English translation thereof if the copy of the latest international work product is not in the English language;
(6) Applicant must submit the claims from the corresponding PCT application which were indicated as having novelty, inventive step and industrial applicability in the latest work product

of the PCT application along with an English translation thereof and a statement that the English translation is accurate if the claims are not in the English language;
(7) Applicant must submit a claim correspondence table in English; and
(8) Applicant must submit an IDS listing the documents cited in the international work products (ISR, WO/ISA, WO/IPEA, IPER) of the PCT application along with copies of documents except U.S. patents or U.S. patent application publications.

The request to participate in the PCT-PPH program and petition comply with the above requirements. Accordingly, the above-identified application has been accorded "special" status.

Telephone inquiries concerning this decision should be directed to Cecilia Tsang at 571-272-0562.

All other inquiries concerning the examination or status of the application should be directed to Patent Application Information Retrieval (PAIR) system at the http://www.uspto.gov/ebc/index.html.

The application is being forwarded to the examiner for action on the merits commensurate with this decision.

Cecilia Tsang
Supervisory Patent Examiner
TC 1600

UNITED STATES PATENT AND TRADEMARK OFFICE

Commissioner for Patents
United States Patent and Trademark Office
P.O. Box 1450
Alexandria, VA 22313-1450
www.uspto.gov

Seed Intellectual Property Law Group, PLLC
701 Fifth Avenue, Suite 5400
Seattle, WA 98104

MAILED
MAR 19 2012
OFFICE OF PETITIONS

In re Application of
Takahisa Aoyama, et. al.
Application No.: 12/865,674
Filed: July 30, 2010
Attorney Docket No.: 734156.517USPC
For: COMMUNICATION TERMINAL AND BASE STATION

: DECISION ON REQUEST TO
: PARTICIPATE IN THE PATENT
: PROSECUTION HIGHWAY
: PROGRAM AND PETITION
: TO MAKE SPECIAL UNDER
: 37 CFR 1.102(a)
:

This is a decision on the request to participate in the PCT Patent Prosecution Highway (PCT-PPH) pilot program and the petition under 37 CFR 1.102(a), filed on November 23, 2011, to make the above-identified application special.

The request and petition are **DENIED**.

A grantable request to participate in the PPH program and petition to make special require:

1. The U.S. application must validly claim priority under 35 U.S.C. 119(a) to one or more applications filed in the JPO, note where the JPO application with similar claims is not the same application from which the U.S. application claims priority then the applicant must identify the relationship between the JPO application with similar claims and the JPO priority application;

2. Applicant must submit a copy of:
   a. The allowable/patentable claim(s) from the JPO application(s) or if a copy of the allowable/patentable claims is available via the Dossier Access System (DAS) applicant may request the USPTO obtain a copy from the DAS, however if the USPTO is unable to obtain a copy from the DAS the applicant will be required to submit a copy;
   b. An English translation of the allowable/patentable claim(s) and
   c. A statement that the English translation is accurate;

3. Applicant must
   a. Ensure all the claims in the U.S. application must sufficiently correspond or be amended to sufficiently correspond to the allowable/patentable claim(s) in the JPO application(s) and
   b. Submit a claims correspondence table in English;

4. Examination of the U.S. application has not begun;

5. Applicant must submit:
   a. Documentation of prior office action:
      i. a copy of the office action(s) just prior to the "Decision to Grant a Patent" from each of the JPO application(s) containing the allowable/patentable claim(s) or
      ii. if the allowable/patentable claims(s) are from a "Notification of Reasons for Refusal" then the Notification of Reasons for Refusal or
      iii. if the JPO application is a first action allowance then no office action from the JPO is necessary should be indicated on the request/petition form;

      Further, if a copy of the documents from a or b above is available via the Dossier Access System (DAS) applicant may request the USPTO obtain a copy from the DAS, however if the USPTO is unable to obtain a copy from the DAS the applicant will be required to submit a copy;
   b. An English language translation of the JPO Office action from (5)(a)(i)-(ii) above
   c. A statement that the English translation is accurate;

6. Applicant must submit:
   a. An IDS listing the documents cited by the JPO examiner in the JPO office action (unless already submitted in this application)
   b. Copies of the documents except U.S. patents or U.S. patent application publications (unless already submitted in this application);

The request to participate in the PPH pilot program and the present petition fails meet condition (4) above. In this regard, since examination of the application began March 7, 2012, the present petition cannot be granted.

Telephone inquiries concerning this decision should be directed to Andrea Smith at (571) 272-3226. All other inquiries concerning the examination or status of the application is accessible in the PAIR system at http://www.uspto.gov/ebc.index.html.

Anthony Knight
Director
Office of Petitions

UNITED STATES PATENT AND TRADEMARK OFFICE

Commissioner for Patents
United States Patent and Trademark Office
P.O. Box 1450
Alexandria, VA 22313-1450
www.uspto.gov

MAILED

MAR 28 2011

PCT LEGAL ADMINISTRATION

EXXONMOBIL CHEMICAL COMPANY
5200 BAYWAY DRIVE
P.O. BOX 2149
BAYTOWN TX 77522-2149

In re Application of	:	
ROTH et al.	:	
Application No.: 12/865,679	:	DECISION
Attorney's Docket No.: 2008EM048/2	:	
PCT No.: PCT/EP2009/000388	:	
Int. Filing Date: 19 January 2009	:	
Priority Date: 22 February 2008	:	
For: LARGE CRYSTAL MOLECULAR	:	
SIEVES AND THEIR MANUFACTURE	:	

This decision is in response to applicants' petition under 37 CFR 1.182 16 March 2011.

BACKGROUND

On 30 July 2010, applicants filed national stage papers in the United States Designated/Elected Office (DO/EO/US) electronically via EFS-Web. The submission included, *inter alia*, Transmittal Letter (Form PTO-1390) and a preliminary amendment. The international application number keyed into EFS-Web was PCT/EP09/00388. This international application number also appears in the preliminary amendment. However, the international application number appearing in the Transmittal Letter is PCT/EP2009/000387.

On 24 January 2011, a Notification was issued indicating that a petition under 37 CFR 1.182, including the petition fee set forth in 37 CFR 1.17(f), to correct the above-stated error regarding the international application number was required.

On 16 March 2011, applicants submitted the instant petition under 37 CFR 1.182.

DISCUSSION

The petition fee has been paid. A review of the application file including counsel's statements in the instant submission reveals that the present application should in fact be the national stage application of international application **PCT/EP2009/000388**.

CONCLUSION

For the reasons set forth above, the petition under 37 CFR 1.182 is **GRANTED**.

This application is being forwarded to the National Stage Processing Branch of the Office of PCT Operations to continue national stage processing of the application.

/Daniel Stemmer/

Daniel Stemmer
Legal Examiner
PCT Legal Affairs
Office of Patent Cooperation Treaty
Legal Administration
Telephone: (571) 272-3301

UNITED STATES PATENT AND TRADEMARK OFFICE

UNITED STATES DEPARTMENT OF COMMERCE
United States Patent and Trademark Office
Address: COMMISSIONER FOR PATENTS
P.O. Box 1450
Alexandria, Virginia 22313-1450
www.uspto.gov

APPLICATION NO.	FILING DATE	FIRST NAMED INVENTOR	ATTORNEY DOCKET NO.	CONFIRMATION NO.
12/865,713	11/18/2010	Young K. Chen	HSP90-5003-WO-US	5125

32793 7590 04/12/2011
TAKEDA SAN DIEGO, INC.
10410 SCIENCE CENTER DRIVE
SAN DIEGO, CA 92121

EXAMINER

ART UNIT	PAPER NUMBER
1623	

NOTIFICATION DATE	DELIVERY MODE
04/12/2011	ELECTRONIC

Please find below and/or attached an Office communication concerning this application or proceeding.

The time period for reply, if any, is set in the attached communication.

Notice of the Office communication was sent electronically on above-indicated "Notification Date" to the following e-mail address(es):

tsd.docket@takedasd.com
mrussell@takedasd.com

UNITED STATES PATENT AND TRADEMARK OFFICE

Commissioner for Patents
United States Patent and Trademark Office
P.O. Box 1450
Alexandria, VA 22313-1450
www.uspto.gov

TAKEDA SAN DIEGO, INC.
10410 SCIENCE CENTER DRIVE
SAN DIEGO CA 92121

Applicant: Chen et al.
Appl. No.: 12/865,713
Filing Date: November 18, 2010
Title: HSP90 INHIBITORS
Attorney Docket No.: HSP90-5003-WO-US
Pub. No.: US 2011/0053873 A1
Pub. Date: March 3, 2011

This is a decision on the request for republication of patent application publication under 37 CFR 1.221(a), filed on April 4, 2011, for the above-identified application.

The request under 37 CFR 1.221(a) is DISMISSED.

37 CFR 1.221(a) requires "a copy of the application in compliance with the Office electronic filing system requirements and be accompanied by the publication fee set forth in § 1.18(d) and the processing fee set forth in § 1.17(i)". If the request for republication does not comply with the electronic filing system requirements, the republication will not take place and the publication fee set forth in § 1.18(d) will be refunded. The processing fee will be retained.

The applicant did not supply a copy of the application in compliance with the Office electronic filing system, as required by 37 CFR 1.221(a) because **the applicant submitted the papers as a "Document for an existing application", which are entered into the application file, and not as a "Pre-Grant Publication" submission**. The request for republication does not comply with the electronic filing system requirements, thus republication will not take place.

Any request for republication under 37 CFR 1.221(a), must be submitted via the EFS system, as a Pre-Grant publication submission and must include a copy of the application in compliance with the Office electronic filing system requirements. The applicant is directed to the following website for additional instructions on how to submit a Pre-Grant Publication submission via the electronic filing system:

http://www.uspto.gov/ebc/portal/efs/pgpub_quickstart.pdf

Any questions or requests for reconsideration of the decision should be addressed as follows:

By mail to: Mail Stop PGPUB
Commissioner for Patents
P.O. Box 1450
Alexandria, Va. 22313-1450

By facsimile: 571-273-8300

Telephone inquiries regarding this correspondence should be directed to The Office of Data Management at 571-272-4200.

Tammy J. Koontz
Office of Data Management
United States Patent & Trademark Office

Adjustment date: 04/12/2011 KKING1
04/05/2011 INTEFSW 00004980 502256 12865713
02 FC:1504 300.00 CR

UNITED STATES PATENT AND TRADEMARK OFFICE

UNITED STATES DEPARTMENT OF COMMERCE
United States Patent and Trademark Office
Address: COMMISSIONER FOR PATENTS
P.O. Box 1450
Alexandria, Virginia 22313-1450
www.uspto.gov

APPLICATION NO.	FILING DATE	FIRST NAMED INVENTOR	ATTORNEY DOCKET NO.	CONFIRMATION NO.
12/865,724	02/17/2011	Stanislav Jurcik	MGT-10138N36abandon	5377

7590 01/26/2012
HESS PATENT LAW FIRM, P.C.
9 MIRAMAR LANE
STAMFORD, CT 06902

EXAMINER

ART UNIT	PAPER NUMBER
1783	

MAIL DATE	DELIVERY MODE
01/26/2012	PAPER

DECISION DISMISSING PETITION UNDER 37 CFR 1.138(d)

The declaration of express abandonment will not be recognized

This is in response to the petition under 37 CFR 1.138(d), requesting for a refund of any previously paid search fee and excess claims fee in the above-identified application.

The petition is dismissed.

The express abandonment will **not** be recognized for the reason(s) indicated below:

1. ☐ The petition was not filed in sufficient time to permit the appropriate officials to recognize the abandonment before an examination has been made of the application. See 37 CFR 1.138(d).
2. ☐ The petition was not signed by a party authorized by 37 CFR 1.33(b)(1), (3) or (4).
3. ☑ The application is not an application filed under 35 U.S.C. 111(a) on or after December 8, 2004.
4. ☐ The petition for express abandonment under 1.138(d) is dismissed because the applicant did not pay any search fee and excess claims fees in the above-identified application.

Telephone inquiries should be directed to the Office of Data Management at (571) 272-4200.

Nioni Farmer

Patent Publication Branch
Office of Data Management

FORM PET651D (Rev. 08/07)

UNITED STATES PATENT AND TRADEMARK OFFICE

COMMISSIONER FOR PATENTS
UNITED STATES PATENT AND TRADEMARK OFFICE
P.O. BOX 1450
ALEXANDRIA, VA 22313-1450
www.uspto.gov

MAILED

JAN 10 2011

PCT LEGAL ADMINISTRATION

IP GROUP OF DLA PIPER LLP (US)
ONE LIBERTY PLACE
1650 MARKET ST, SUITE 4900
PHILADELPHIA, PA 19103

In re Application of OH et al	:	
U.S. Application No.: 12/865,798	:	
PCT Application No.: PCT/KR2009/000379	:	DECISION
Int. Filing Date: 23 January 2009	:	
Priority Date Claimed: 05 February 2008	:	
Attorney Docket No.: LEE-10-1279	:	
For: LITHIUM SECONDARY BATTERY AND MANUFACTURING METHOD FOR SAME	:	

This is in response to the petition under 37 CFR 1.182 filed on 14 December 2010.

BACKGROUND

On 02 August 2010, applicant filed national stage papers under 35 U.S.C. 371 via the EFS-Web electronic filing system of the USPTO. As shown on the EFS-Web Electronic Acknowledgement Receipt, the submission identified the international application number as "PCT/US09/00379". However, information listed on the submitted application data sheet is not consistent with the bibliographic data for international application number PCT/US09/00379.

On 26 November 2010, this Office mailed a communication which identified the above-noted discrepancy.

On 14 December 2010, applicant filed the instant petition under 37 CFR 1.182. The requisite petition fee under 37 CFR 1.17(f) will be charged to Deposit Account No. 50-2719 as authorized in the petition.

DISCUSSION

The petition states that the incorrect international application number was entered into the EFS-Web user interface when filing the present application. A review of the application file reveals that the correct international application number PCT/KR2009/000379 was listed on at least one document filed on 02 August 2010. Accordingly, correction of the application is permissible, and applicant's explanation for the error is accepted.

CONCLUSION

For the reasons above, the petition under 37 CFR 1.182 is GRANTED.

The application has an International Filing Date under 35 U.S.C. 363 of 23 January 2009, and a date under 35 U.S.C. 371(c)(1), (c)(2), and (c)(4) of 02 August 2010.

This application is being forwarded to the United States Designated/Elected Office (DO/EO/US) for further processing in accordance with this decision.

Bryan Lin

Bryan Lin
PCT Legal Examiner
PCT Legal Office

Telephone: 571-272-3303
Facsimile: 571-273-0459

UNITED STATES PATENT AND TRADEMARK OFFICE

UNITED STATES DEPARTMENT OF COMMERCE
United States Patent and Trademark Office
Address: COMMISSIONER FOR PATENTS
P.O. Box 1450
Alexandria, Virginia 22313-1450
www.uspto.gov

APPLICATION NO.	FILING DATE	FIRST NAMED INVENTOR	ATTORNEY DOCKET NO.	CONFIRMATION NO.
12/865,799	08/02/2010	Takeshi Okamoto	085393-0291	6234

53080 7590 01/10/2011
MCDERMOTT WILL & EMERY LLP
600 13TH STREET, NW
WASHINGTON, DC 20005-3096

EXAMINER
YANCHUK, STEPHEN J

ART UNIT	PAPER NUMBER
1729	

MAIL DATE	DELIVERY MODE
01/10/2011	PAPER

Please find below and/or attached an Office communication concerning this application or proceeding.

The time period for reply, if any, is set in the attached communication.

UNITED STATES PATENT AND TRADEMARK OFFICE

Commissioner for Patents
United States Patent and Trademark Office
P.O. Box 1450
Alexandria, VA 22313-1450
www.uspto.gov

January 10, 2011 BC

In re application of Takeshi Okamoto et al. Serial No. 12/865,799 Filed: August 02, 2010 For: LEAD ACID BATTERY MANUFACTURING METHOD AND LEAD ACID BATTERY	: : : : : : :	DECISION ON REQUEST TO PARTICIPATE IN PATENT PROSECUTION HIGHWAY PROGRAM AND PETITION TO MAKE SPECIAL UNDER 37 CFR 1.102(a)

This is a decision on the request to participate in the Patent Prosecution Highway (PPH) program filed September 07, 2010.

The request and petition are **GRANTED**.

A grantable request to participate in the PPH program and petition to make special require:

(1) The U.S. application must validly claim priority under 35 U.S.C. 119(a) to one or more applications filed in the JPO, note where the JPO application with similar claims is not the same application from which the U.S. application claims priority that the applicant must identify the relationship between the JPO application with similar claims and the JPO priority application;

(2) Applicant must submit a copy of:
   a. The allowable/patentable claim(s) from the JPO application(s) or if a copy of the allowable/patentable claims is available via the Dossier Access System (DAS) applicant may request the USPTO to obtain a copy from DAS; however, if the USPTO is unable to obtain a copy from the DAS, the applicant will be required to submit a copy;
   b. An English translation of the allowable/ patentable claim(s), if applicable; and
   c. A statement that the English translation is accurate, if applicable;

(3) Applicant must:
   a. Ensure all the claims in the U.S. application must sufficiently correspond or be amended to sufficiently correspond to the allowable/patentable claim(s) in the JPO application(s); and
   b. Submit a claims correspondence table in English;

(4) Examination of the U.S. application has not begun;

(5) Applicant must submit:

a. Documentation of prior office action:
   i. a copy of the office action(s) just prior to the "Decision to Grant a Patent" from each of the JPO application(s) containing the allowable/patentable claims(s) or
   ii. if the allowable/patentable claim(s) are from "Notification of Reasons for Refusal" then the Notification of Reasons for Refusal or
   iii. if the JPO application is a first action allowance then no office action from the JPO is necessary should be indicated on the request/petition form;
   Further, if a copy of the documents from a or b is available via the Dossier Access System (DAS), applicant may request the USPO obtain a copy from the DAS; however, if the USPTO is unable to obtain a copy of the DAS, the applicant will be required to submit a copy;
b. An English language translation of the JPO Office action from (5)(a)(i)-(ii) above if applicable; and
c. A statement that the English translation is accurate; and

(6) Applicant must submit:
a. An IDS listing the documents cited by the JPO examiner in the JPO office action (unless already submitted in this application)
b. Copies of documents except U.S. patents or U.S. patent application publications (unless already submitted in this application).

The request to participate in the PPH program and petition comply with the above requirements. Accordingly, the above-identified application has been accorded "special" status.

The application is being forwarded to the examiner for action on the merits commensurate with this decision.

Any inquiry regarding this decision should be directed to Blaine Copenheaver, Quality Assurance Specialist, at (571) 272-1156.

All other inquiries concerning the examination or status of the application is accessible in the PAIR system at http://www.uspto.gov/ebc/index.html.

/Blaine Copenheaver/

Blaine Copenheaver
Quality Assurance Specialist
Technology Center 1700

UNITED STATES PATENT AND TRADEMARK OFFICE

Commissioner for Patents
United States Patent and Trademark Office
P.O. Box 1450
Alexandria, VA 22313-1450
www.uspto.gov

KENNAMETAL INC.
INTELLECTUAL PROPERTY DEPARTMENT
P.O. BOX 231
1600 TECHNOLOGY WAY
LATROBE, PA 15650

MAILED
SEP 23 2011
OFFICE OF PETITIONS

Applicant: Nurnberger, et al.
Appl. No.: 12/865,817
International Filing Date: March 11, 2009
Title: VAPORIZOR BODY
Attorney Docket No.: 029310.00008
Pub. No.: US 2011/0013891 A1
Pub. Date: January 20, 2011

This is a decision on the request for a corrected patent application publication under 37 CFR 1.221(b), received on February 9, 2011, for the above-identified application.

The request is DISMISSED.

Applicant requests that the application be republished because the patent application publication contains material errors on the front page of the publication wherein the assignee's name is incorrect.

37 CFR 1.221 (b) is applicable "only when the Office makes a material mistake which is apparent from Office records.... Any request for a corrected publication or revised patent application publication other than provided as provided in paragraph (a) of this section must be filed within two months from the date of the patent application publication. This period is not extendable." A material mistake must affect the public's ability to appreciate the technical disclosure of the patent application publication, to determine the scope of the patent application publication, or to determine the scope of the provisional rights that an applicant may seek to enforce upon issuance of a patent. [1]

The error on the front page of the publication wherein the assignee's name "KENNAMETAL SINTEC KERAMIK GMBH" is misprinted as "KENNAMENTAL SINTEC KERAMIK GMBH" is not a material Office error under 37 CFR 1.221. The misprinting of the assignee's name does not affect the understanding of the application. The error in assignment information is not a material mistake because it does not affect the public's ability to appreciate the technical disclosure of the patent application publication, to determine the scope of the patent application

[1] Changes to Implement Eighteen-Month Publication of Patent Applications, 65 FR 57023, 57038 (Sept. 20, 2000), 1239, Off. Gaz. Pat. Office Notices 63, 75 (Oct. 10, 2000) (final rule).

publication or to determine the scope of the provisional rights that an applicant may seek to enforce upon issuance of a patent. See MPEP 1130. Applicant should not file requests for corrected publication when a publication includes errors in assignment information or missing assignment information. See MPEP 1130.

Applicants are encouraged to use and submit an **eADS** (PTO/SB/14) as an EFS-Web Fillable Form, rather than a scanned PDF image, to benefit from having the data loaded directly into USPTO electronic systems. For questions contact the Patent EBC (Electronic Business Center):
Telephone: 1-866-217-9197 (toll-free) or E-mail: ebc@uspto.gov
571-272-4100 (local)

On September 28, 2010 and October 15, 2010, a Filing Receipt was mailed by the Office, which incorrectly listed the assignee's name. To avoid this type of problem in the future, applicant's representative should correct the error, if applicable and make a request for a corrected filing receipt prior to export of the application to the publisher and publication of the application.

The applicant is advised that a "request for republication of an application previously published" may be filed under 37 CFR 1.221(a). Such a request for republication "must include a copy of the application compliance with the Office's electronic filing system requirements and be accompanied by the publication fee set forth in § 1.18(d) and the processing fee set forth in § 1.17(i)." If the request for republication does not comply with the electronic filing system requirements, the republication will not take place and the publication fee set forth in § 1.18(d) will be refunded. The processing fee will be retained.

A guide for filing a request for a Pre-Grant Publication, such as a request for republication, may be found on the link below:

http://www.uspto.gov/patents/process/file/efs/guidance/index.jsp

http://www.uspto.gov/ebc/portal/efs/pgpub_quickstart.pdf

Any request for republication under 37 CFR 1.221(a), must be submitted via the EFS system, as a "Pre-Grant Publication."

Inquiries relating to this matter may be directed to Mark Polutta at (571) 272-7709.

Mark Polutta
Senior Legal Advisor
Office of Patent Legal Administration
Office of the Deputy Commissioner
for Patent Examination Policy

UNITED STATES PATENT AND TRADEMARK OFFICE

Commissioner for Patents
United States Patent and Trademark Office
P.O. Box 1450
Alexandria, VA 22313-1450
www.uspto.gov

MAILED
DEC 08 2010
OFFICE OF PETITIONS

TRASKBRITT, P.C.
P.O. BOX 2550
SALT LAKE CITY UT 84110

In re Application of
Shaheen, et al.
Application No. 12/865,838
Filed: August 2, 2010
Attorney Docket No. 3356-10106US

DECISION ON PETITION

This is a decision on the petition under 37 CFR 1.182, filed November 16, 2010, to change the order of the names of the inventors.

Office records have been corrected to reflect the change in the order of the named inventors set forth in the Application Data Sheet. A corrected Filing Receipt, which sets forth the desired order of the named inventors, accompanies this decision on petition.

Receipt is acknowledged of the $400 fee for the petition under 37 CFR 1.182.

This application is being referred to Technology Center AU 2811 for examination in due course.

Telephone inquiries specific to this matter should be directed to the undersigned at (571) 272-3205.

/ALESIA M. BROWN/

Alesia M. Brown
Petitions Attorney
Office of Petitions

UNITED STATES PATENT AND TRADEMARK OFFICE

UNITED STATES DEPARTMENT OF COMMERCE
United States Patent and Trademark Office
Address: COMMISSIONER FOR PATENTS
P.O. Box 1450
Alexandria, Virginia 22313-1450
www.uspto.gov

APPLICATION NUMBER	FILING or 371(c) DATE	GRP ART UNIT	FIL FEE REC'D	ATTY.DOCKET.NO	TOT CLAIMS	IND CLAIMS
12/865,838	08/02/2010	2811	1408	3356-10106US	24	4

CONFIRMATION NO. 6632

CORRECTED FILING RECEIPT

24247
TRASKBRITT, P.C.
P.O. BOX 2550
SALT LAKE CITY, UT 84110

OC000000044832236

Date Mailed: 12/07/2010

Receipt is acknowledged of this non-provisional patent application. The application will be taken up for examination in due course. Applicant will be notified as to the results of the examination. Any correspondence concerning the application must include the following identification information: the U.S. APPLICATION NUMBER, FILING DATE, NAME OF APPLICANT, and TITLE OF INVENTION. Fees transmitted by check or draft are subject to collection. Please verify the accuracy of the data presented on this receipt. **If an error is noted on this Filing Receipt, please submit a written request for a Filing Receipt Correction. Please provide a copy of this Filing Receipt with the changes noted thereon. If you received a "Notice to File Missing Parts" for this application, please submit any corrections to this Filing Receipt with your reply to the Notice. When the USPTO processes the reply to the Notice, the USPTO will generate another Filing Receipt incorporating the requested corrections**

Applicant(s)

Mohamad Shaheen, Portland, OR;
Frederic Allibert, Grenoble, FRANCE;
Gweltaz Gaudin, Grenoble, FRANCE;
Fabrice Lallement, Aix les Bains, FRANCE;
Didier Landru, Champ Pres Froges, FRANCE;
Karine Landry, Grenoble, FRANCE;
Carlos Mazure, Bernin, FRANCE;

Assignment For Published Patent Application

S.O.I. TEC SILICON ON INSULATOR TECHNOLOGIES, Bernin, FRANCE

Power of Attorney: The patent practitioners associated with Customer Number 24247

Domestic Priority data as claimed by applicant

This application is a 371 of PCT/IB2008/052203 03/13/2008

Foreign Applications

If Required, Foreign Filing License Granted: 12/06/2010

The country code and number of your priority application, to be used for filing abroad under the Paris Convention, is **US 12/865,838**

Projected Publication Date: 01/20/2011

Non-Publication Request: No

Early Publication Request: No

Title

SUBSTRATE HAVING A CHARGED ZONE IN AN INSULATING BURIED LAYER

Preliminary Class

257

PROTECTING YOUR INVENTION OUTSIDE THE UNITED STATES

Since the rights granted by a U.S. patent extend only throughout the territory of the United States and have no effect in a foreign country, an inventor who wishes patent protection in another country must apply for a patent in a specific country or in regional patent offices. Applicants may wish to consider the filing of an international application under the Patent Cooperation Treaty (PCT). An international (PCT) application generally has the same effect as a regular national patent application in each PCT-member country. The PCT process **simplifies** the filing of patent applications on the same invention in member countries, but **does not result** in a grant of "an international patent" and does not eliminate the need of applicants to file additional documents and fees in countries where patent protection is desired.

Almost every country has its own patent law, and a person desiring a patent in a particular country must make an application for patent in that country in accordance with its particular laws. Since the laws of many countries differ in various respects from the patent law of the United States, applicants are advised to seek guidance from specific foreign countries to ensure that patent rights are not lost prematurely.

Applicants also are advised that in the case of inventions made in the United States, the Director of the USPTO must issue a license before applicants can apply for a patent in a foreign country. The filing of a U.S. patent application serves as a request for a foreign filing license. The application's filing receipt contains further information and guidance as to the status of applicant's license for foreign filing.

Applicants may wish to consult the USPTO booklet, "General Information Concerning Patents" (specifically, the section entitled "Treaties and Foreign Patents") for more information on timeframes and deadlines for filing foreign patent applications. The guide is available either by contacting the USPTO Contact Center at 800-786-9199, or it can be viewed on the USPTO website at http://www.uspto.gov/web/offices/pac/doc/general/index.html.

For information on preventing theft of your intellectual property (patents, trademarks and copyrights), you may wish to consult the U.S. Government website, http://www.stopfakes.gov. Part of a Department of Commerce initiative, this website includes self-help "toolkits" giving innovators guidance on how to protect intellectual property in specific countries such as China, Korea and Mexico. For questions regarding patent enforcement issues, applicants may call the U.S. Government hotline at 1-866-999-HALT (1-866-999-4158).

LICENSE FOR FOREIGN FILING UNDER

Title 35, United States Code, Section 184

Title 37, Code of Federal Regulations, 5.11 & 5.15

GRANTED

The applicant has been granted a license under 35 U.S.C. 184, if the phrase "IF REQUIRED, FOREIGN FILING LICENSE GRANTED" followed by a date appears on this form. Such licenses are issued in all applications where the conditions for issuance of a license have been met, regardless of whether or not a license may be required as

set forth in 37 CFR 5.15. The scope and limitations of this license are set forth in 37 CFR 5.15(a) unless an earlier license has been issued under 37 CFR 5.15(b). The license is subject to revocation upon written notification. The date indicated is the effective date of the license, unless an earlier license of similar scope has been granted under 37 CFR 5.13 or 5.14.

This license is to be retained by the licensee and may be used at any time on or after the effective date thereof unless it is revoked. This license is automatically transferred to any related applications(s) filed under 37 CFR 1.53(d). This license is not retroactive.

The grant of a license does not in any way lessen the responsibility of a licensee for the security of the subject matter as imposed by any Government contract or the provisions of existing laws relating to espionage and the national security or the export of technical data. Licensees should apprise themselves of current regulations especially with respect to certain countries, of other agencies, particularly the Office of Defense Trade Controls, Department of State (with respect to Arms, Munitions and Implements of War (22 CFR 121-128)); the Bureau of Industry and Security, Department of Commerce (15 CFR parts 730-774); the Office of Foreign AssetsControl, Department of Treasury (31 CFR Parts 500+) and the Department of Energy.

NOT GRANTED

No license under 35 U.S.C. 184 has been granted at this time, if the phrase "IF REQUIRED, FOREIGN FILING LICENSE GRANTED" DOES NOT appear on this form. Applicant may still petition for a license under 37 CFR 5.12, if a license is desired before the expiration of 6 months from the filing date of the application. If 6 months has lapsed from the filing date of this application and the licensee has not received any indication of a secrecy order under 35 U.S.C. 181, the licensee may foreign file the application pursuant to 37 CFR 5.15(b).

UNITED STATES PATENT AND TRADEMARK OFFICE

Commissioner for Patents
United States Patent and Trademark Office
P.O. Box 1450
Alexandria, VA 22313-1450
www.uspto.gov

ALSTON & BIRD LLP
BANK OF AMERICA PLAZA
101 SOUTH TRYON STREET, SUITE 4000
CHARLOTTE NC 28280-4000

MAILED

NOV 17 2011

OFFICE OF PETITIONS

In re Application of	:	
Anderson et al	:	
Application No. 12/865,857	:	DECISION ON PETITION
Filed: December 23, 2010	:	
Attorney Docket No. 057449-393771	:	

This is a decision on the petition under 37 CFR 1.182, filed, November 4, 2011, to change the name of inventor "Kelly Banducci" to – Kelly Inglis --.

The petition is **GRANTED**.

Office records have been updated to reflect the inventor's change of name. A corrected Filing Receipt, which reflects the inventor's change of name, accompanies this decision on petition.

Any questions concerning this matter may be directed to the undersigned at (571) 272-3230. Any questions concerning the examination procedures or status of the application should be directed to the Technology Center.

This application is being referred to Technology Center AU 1635 for examination in due course.

Shirene Willis Brantley
Senior Petitions Attorney
Office of Petitions

ATTACHMENT: Corrected Filing Receipt

UNITED STATES PATENT AND TRADEMARK OFFICE

UNITED STATES DEPARTMENT OF COMMERCE
United States Patent and Trademark Office
Address: COMMISSIONER FOR PATENTS
P.O. Box 1450
Alexandria, Virginia 22313-1450
www.uspto.gov

APPLICATION NUMBER	FILING or 371(c) DATE	GRP ART UNIT	FIL FEE REC'D	ATTY.DOCKET.NO	TOT CLAIMS	IND CLAIMS
12/865,857	12/23/2010	1635	2016	057449-393771	28	4

CONFIRMATION NO. 6957

CORRECTED FILING RECEIPT

826
ALSTON & BIRD LLP
BANK OF AMERICA PLAZA
101 SOUTH TRYON STREET, SUITE 4000
CHARLOTTE, NC 28280-4000

OC000000050970793

Date Mailed: 11/15/2011

Receipt is acknowledged of this non-provisional patent application. The application will be taken up for examination in due course. Applicant will be notified as to the results of the examination. Any correspondence concerning the application must include the following identification information: the U.S. APPLICATION NUMBER, FILING DATE, NAME OF APPLICANT, and TITLE OF INVENTION. Fees transmitted by check or draft are subject to collection. Please verify the accuracy of the data presented on this receipt. **If an error is noted on this Filing Receipt, please submit a written request for a Filing Receipt Correction. Please provide a copy of this Filing Receipt with the changes noted thereon. If you received a "Notice to File Missing Parts" for this application, please submit any corrections to this Filing Receipt with your reply to the Notice. When the USPTO processes the reply to the Notice, the USPTO will generate another Filing Receipt incorporating the requested corrections**

Applicant(s)

John P. Anderson, San Francisco, CA;
Kelly Inglis, Pleasanton, CA;
Guriqbal S. Basi, Palo Alto, CA;
David Chereau, San Mateo, CA;
Tamie J. Chilcote, San Fancisco, CA;
Normand L. Frigon JR., South San Fancisco, CA;
Jason Goldstein, Decatur, GA;
Irene Griswold-Prenner, San Francisco, CA;

Assignment For Published Patent Application

Elan Pharma International Limited

Power of Attorney: The patent practitioners associated with Customer Number 826

Domestic Priority data as claimed by applicant

This application is a 371 of PCT/US09/34135 02/13/2009
which claims benefit of 61/053,632 05/15/2008

Foreign Applications (You may be eligible to benefit from the **Patent Prosecution Highway** program at the USPTO. Please see http://www.uspto.gov for more information.)
UNITED STATES OF AMERICA 12030849 02/13/2008

If Required, Foreign Filing License Granted: 05/12/2011

The country code and number of your priority application, to be used for filing abroad under the Paris Convention, is **US 12/865,857**

Projected Publication Date: Not Applicable

Non-Publication Request: No

Early Publication Request: No
Title

ALPHA-SYNUCLEIN KINASE

Preliminary Class

514

PROTECTING YOUR INVENTION OUTSIDE THE UNITED STATES

Since the rights granted by a U.S. patent extend only throughout the territory of the United States and have no effect in a foreign country, an inventor who wishes patent protection in another country must apply for a patent in a specific country or in regional patent offices. Applicants may wish to consider the filing of an international application under the Patent Cooperation Treaty (PCT). An international (PCT) application generally has the same effect as a regular national patent application in each PCT-member country. The PCT process **simplifies** the filing of patent applications on the same invention in member countries, but **does not result** in a grant of "an international patent" and does not eliminate the need of applicants to file additional documents and fees in countries where patent protection is desired.

Almost every country has its own patent law, and a person desiring a patent in a particular country must make an application for patent in that country in accordance with its particular laws. Since the laws of many countries differ in various respects from the patent law of the United States, applicants are advised to seek guidance from specific foreign countries to ensure that patent rights are not lost prematurely.

Applicants also are advised that in the case of inventions made in the United States, the Director of the USPTO must issue a license before applicants can apply for a patent in a foreign country. The filing of a U.S. patent application serves as a request for a foreign filing license. The application's filing receipt contains further information and guidance as to the status of applicant's license for foreign filing.

Applicants may wish to consult the USPTO booklet, "General Information Concerning Patents" (specifically, the section entitled "Treaties and Foreign Patents") for more information on timeframes and deadlines for filing foreign patent applications. The guide is available either by contacting the USPTO Contact Center at 800-786-9199, or it can be viewed on the USPTO website at http://www.uspto.gov/web/offices/pac/doc/general/index.html.

For information on preventing theft of your intellectual property (patents, trademarks and copyrights), you may wish to consult the U.S. Government website, http://www.stopfakes.gov. Part of a Department of Commerce initiative, this website includes self-help "toolkits" giving innovators guidance on how to protect intellectual property in specific countries such as China, Korea and Mexico. For questions regarding patent enforcement issues, applicants may call the U.S. Government hotline at 1-866-999-HALT (1-866-999-4158).

LICENSE FOR FOREIGN FILING UNDER

Title 35, United States Code, Section 184

Title 37, Code of Federal Regulations, 5.11 & 5.15

GRANTED

The applicant has been granted a license under 35 U.S.C. 184, if the phrase "IF REQUIRED, FOREIGN FILING LICENSE GRANTED" followed by a date appears on this form. Such licenses are issued in all applications where the conditions for issuance of a license have been met, regardless of whether or not a license may be required as set forth in 37 CFR 5.15. The scope and limitations of this license are set forth in 37 CFR 5.15(a) unless an earlier license has been issued under 37 CFR 5.15(b). The license is subject to revocation upon written notification. The date indicated is the effective date of the license, unless an earlier license of similar scope has been granted under 37 CFR 5.13 or 5.14.

This license is to be retained by the licensee and may be used at any time on or after the effective date thereof unless it is revoked. This license is automatically transferred to any related applications(s) filed under 37 CFR 1.53(d). This license is not retroactive.

The grant of a license does not in any way lessen the responsibility of a licensee for the security of the subject matter as imposed by any Government contract or the provisions of existing laws relating to espionage and the national security or the export of technical data. Licensees should apprise themselves of current regulations especially with respect to certain countries, of other agencies, particularly the Office of Defense Trade Controls, Department of State (with respect to Arms, Munitions and Implements of War (22 CFR 121-128)); the Bureau of Industry and Security, Department of Commerce (15 CFR parts 730-774); the Office of Foreign AssetsControl, Department of Treasury (31 CFR Parts 500+) and the Department of Energy.

NOT GRANTED

No license under 35 U.S.C. 184 has been granted at this time, if the phrase "IF REQUIRED, FOREIGN FILING LICENSE GRANTED" DOES NOT appear on this form. Applicant may still petition for a license under 37 CFR 5.12, if a license is desired before the expiration of 6 months from the filing date of the application. If 6 months has lapsed from the filing date of this application and the licensee has not received any indication of a secrecy order under 35 U.S.C. 181, the licensee may foreign file the application pursuant to 37 CFR 5.15(b).

SelectUSA

The United States represents the largest, most dynamic marketplace in the world and is an unparalleled location for business investment, innovation and commercialization of new technologies. The USA offers tremendous resources and advantages for those who invest and manufacture goods here. Through SelectUSA, our nation works to encourage, facilitate, and accelerate business investment. To learn more about why the USA is the best country in the world to develop technology, manufacture products, and grow your business, visit SelectUSA.gov.

UNITED STATES PATENT AND TRADEMARK OFFICE

UNITED STATES DEPARTMENT OF COMMERCE
United States Patent and Trademark Office
Address: COMMISSIONER FOR PATENTS
P.O. Box 1450
Alexandria, Virginia 22313-1450
www.uspto.gov

APPLICATION NO.	FILING DATE	FIRST NAMED INVENTOR	ATTORNEY DOCKET NO.	CONFIRMATION NO.
12/865,879	08/03/2010	Tsuyoshi Inoue	2010_1026A	7117

52349 7590 08/05/2011
WENDEROTH, LIND & PONACK L.L.P.
1030 15th Street, N.W.
Suite 400 East
Washington, DC 20005-1503

EXAMINER

ART UNIT	PAPER NUMBER
2484	

NOTIFICATION DATE	DELIVERY MODE
08/05/2011	ELECTRONIC

Please find below and/or attached an Office communication concerning this application or proceeding.

The time period for reply, if any, is set in the attached communication.

Notice of the Office communication was sent electronically on above-indicated "Notification Date" to the following e-mail address(es):

ddalecki@wenderoth.com
eoa@wenderoth.com

UNITED STATES PATENT AND TRADEMARK OFFICE

Commissioner for Patents
United States Patent and Trademark Office
P.O. Box 1450
Alexandria, VA 22313-1450
www.uspto.gov

WENDEROTH, LIND & PONACK L.L.P.
1030 15th Street, N.W.
Suite 400 East
Washington DC 20005-1503

In re Application of: INOUE et al.
Application No. 12/865879
Filed: August 03, 2010
For: **RELATED SCENE ADDITION APPARATUS AND RELATED SCENE ADDITION METHOD**

DECISION ON REQUEST TO PARTICIPATE IN PATENT PROSECUTION HIGHWAY PROGRAM AND PETITION TO MAKE SPECIAL UNDER 37 CFR 1.102(d)

This is a decision on the request to participate in the Patent Prosecution Highway (PPH) program and the petition under 37 CFR 1.102(d), filed August 3, 2010, to make the above-identified application special.

The petition is **GRANTED.**

A grantable request to participate in the PPH program and petition to make special require:

(1) The U.S. application must (1) validly claims priority under 35 U.S.C. 119(a) and 37 CFR 1.55 to one or more corresponding JPO application(s) or to a PCT application that does not contain any priority claim, or (2) is a national stage entry of a PCT application that does not contain any priority claim;

(2) Applicant must submit a copy of the allowable/patentable claim(s) from the JPO application(s) along with an English translation thereof and a statement that the English translation is accurate;

(3) All the claims in the U.S. application must sufficiently correspond or be amended to sufficiently correspond to the allowable/patentable claim(s) in the JPO application(s);

(4) Examination of the U.S. application has not begun;

(5) Applicant must submit a copy of all the office actions from each of the JPO application(s) containing the allowable/patentable claim(s) along with an English translation thereof and a statement that the English translation is accurate;

(6) Applicant must submit an IDS listing the documents cited by the JPO examiner in the JPO office action along with copies of documents except U.S. patents or U.S.

patent application publications; and

(7) The required petition fee under 37 CFR 1.17(h).

The request to participate in the PPH program and petition are found to comply with all the above requirements. Accordingly, the above-identified application has been accorded "special" status.

Telephone inquiries concerning this decision should be directed to Chau Nguyen at 571-272-3126

All other inquiries concerning the examination or status of the application is accessible in the PAIR system at http://www.uspto.gov/ebc/index.html.

The application is being forwarded to the examiner for action on the merits commensurate with this decision.

Chau T. Nguyen

Chau Nguyen
Quality Assurance Specialist
Technology Center 2400

UNITED STATES PATENT AND TRADEMARK OFFICE

Commissioner for Patents
United States Patent and Trademark Office
P.O. Box 1450
Alexandria, VA 22313-1450
www.uspto.gov

Stites & Harbison PLLC
1199 North Fairfax Street
Suite 900
Alexandria VA 22314

MAILED

FEB 14 2011

PCT LEGAL ADMINISTRATION

In re Application of	:	
SMITH, John J.	:	
Application No. 12/865,892	:	DECISION ON PETITION
PCT No.: PCT/GB2009/000286	:	UNDER 37 CFR 1.47(b)
Int. Filing Date: 03 February 2009	:	
Priority Date: 04 February 2008	:	
Attorney Docket No.: P10159US00/DEJ	:	
For: WING CONTROL DEVICES	:	

This decision is issued in response to applicant's "Petition under 37 C.F.R. 1.47(b)" filed 26 October 2010 to accept the application without the signature of inventor, John J. Smith.

BACKGROUND

On 03 February 2009, applicant filed international application PCT/GB2009/000286 which claimed a priority date of 04 February 2008. Accordingly, the thirty-month time period for submitting the requisite basic national fee in the United States of America was to expire 30 months from the priority date, 04 August 2010.

On 03 August 2010, applicant filed a transmittal letter for entry into the national stage in the United States, which was accompanied by, inter alia: the requisite basic national fee as required by 35 U.S.C. 371(c)(1) and a copy of international application.

On 20 September 2010, the United Stated Designated/Elected Office mailed a Notification of Missing Requirements under 35 U.S.C. 371 (Form PCT/DO/EO/905) indicating that an oath or declaration in compliance with 37 CFR 1.497 must be filed. The notification set a two-month time limit in which to respond.

On 26 October 2010, applicant filed the present petition under 37 CFR 1.47(b).

DISCUSSION

Applicant claims that inventor John J. Smith refuses to cooperate in the above-captioned application.

A petition under 37 CFR 1.47(b) must be accompanied by: (1) the requisite petition fee under 37 CFR 1.17; (2) factual proof that the inventor refuses to execute the application or cannot be reached after diligent effort; (3) a statement of the last known address of the nonsigning inventor; (4) an oath or declaration executed by the 37 CFR 1.47(b) applicant on behalf of and as agent for the nonsigning inventor; (5) proof of proprietary interest in the application; and, (6) a showing that such action is necessary to preserve the rights of the parties or to prevent irreparable damages. The 37 CFR 1.47(b) applicant has satisfied the requirements of items (1), (3), (4) and (6) have been satisfied. However, items (2) and (5) have not been satisfied.

Applicant here has submitted the appropriate petition fee. Item (1) is therefore satisfied.

Regarding item (2), the petition asserts that the non-signing inventor has refused to execute the application. MPEP section 409.03(d) states that, before it can be concluded that an inventor has refused to execute the application papers, "[a] copy of the application papers should be sent to the last known address of the nonsigning inventor, or, if the nonsigning inventor is represented by counsel, to the address of the nonsigning inventor's attorney." The MPEP also states the following:

> Where a refusal of the inventor to sign the application papers is alleged, the circumstances of the presentation of the application papers and of the refusal must be specified in a statement of facts by the person who presented the inventor with the application papers and/or to whom the refusal was made. Statements by a party not present when an oral refusal is made will not be accepted.

Here, the petition refers to unsuccessful effort to obtain the inventor's signature via postal mail, and a copy of one such correspondence has been included with the petition. However, there is no evidence presented that the correspondence address being used was current and that the inventor actually received the signature request sent to such address. Evidence that an inventor has received the signature request is especially important in situations where, as here, petitioner is requesting that the inventor's failure to respond to such a request be interpreted as a refusal to sign.

As stated above, where a refusal of the inventor to sign the application papers is alleged, a statement of facts is needed from a person having first hand knowledge of the facts that a complete copy of the application papers (specification, claims, and drawings) were sent to John D. Smith, and when such papers were sent. In addition, copies of documentary evidence such as a certified mail return receipt, cover letter of instruction, telegrams, etc., should be supplied with the declaration. Item (2) has not been satisfied.[1]

---

[1] It is noted that, should applicants seek to demonstrate that the inventor cannot be located after diligent effort, the requirements for such a showing are set forth in MPEP section 409.03(d)(I).

Regarding item (3) above, a clear statement of the last known address of the nonsigning inventors have been provided.

Regarding item (4), an executed oath or declaration executed by the 37 CFR 1.47(b) applicant on behalf of and as agent for the nonsigning inventor has been provided. Item (4) has been satisfied.

Concerning Item (5), section 409.03(f) of the M.P.E.P., **Proof of Proprietary Interest**, states, in part:

> When an application is deposited pursuant to 37 CFR 1.47(b), the 37 CFR 1.47(b) applicant must prove that, as of the date the application is deposited in the Patent and Trademark Office, (1) the invention has been assigned to the applicant, or (2) the inventor has agreed in writing to assign the invention to the applicant, or (3) the applicant otherwise has sufficient proprietary interest in the subject matter to justify the filing of the application.
>
> If the application assigned, a copy of the assignment (in the English Language) must be submitted. The assignment must clearly indicate that the invention described in the 37 CFR 1.47(b) application was assigned to the 37 CFR 1.47(b) applicant prior to the date the application is deposited in the Patent and Trademark Office. A statement under 37 CFR 3.73(b) by the assignee must also be submitted (see MPEP § 324) . . .

As to item 5, petitioner has not submitted sufficient evidence that the inventor assigned <u>the instant application</u> to Wingtec Holding Limited. Specifically, the assignment submitted by petitioner is directed to British patent application (0802000.0). Petitioner states that Wingtec Holding Limited has a proprietary interest in the invention by virtue of Assignment. However, petitioner fails to indicate whether the international application includes subject matter that is not common with subject matter of the British patent applications. Therefore, further clarification is required that the PCT application does not disclose additional subject matter not disclosed in the British patent applications. (See MPEP section 306, "[i]n the cases of a substitute or continuation-in-part, a prior assignment of the original application is not applied to the substitute or continuation-in-part application because the assignment recorded against the original application gives the assignee rights to only the subject matter common to both applications. Substitute or continuation-in-part application require a new assignment if they are to be issued to an assignee.") Therefore, item (5) has not been satisfied.

Regarding item (6), the petition includes the required express statement that granting of the present petition is necessary to preserve the rights of the 37 CFR 1.47(b) applicant. Item (6) has been satisfied.

For the reasons stated above, it would not be appropriate to accept the application without the signature of John J. Smith under 37 CFR 1.47(b) at this time.

CONCLUSION

The petition filed under 37 CFR 1.47(b) is **DISMISSED** without prejudice.

If reconsideration on the merits of this petition is desired, a proper response must be filed within **TWO MONTHS** from the mailing date of this decision. Extensions of time may be obtained under 37 CFR 1.136(a). Any reconsideration request should include a cover letter entitled "Renewed Petition Under 37 CFR 1.47(b).

Any further correspondence with respect to this matter may be filed electronically via EFS-Web selecting the document description "Petition for review and processing by the PCT Legal Office" or by mail addressed to Mail Stop PCT, Commissioner for Patents, Office of PCT Legal Administration, P.O. Box 1450, Alexandria, Virginia 22313-1450, with the contents of the letter marked to the attention of the Office of PCT Legal Administration.

Anthony Smith
Attorney-Advisor
Office PCT Legal Administration
Tel.: 571-272-3298

UNITED STATES PATENT AND TRADEMARK OFFICE

Commissioner for Patents
United States Patent and Trademark Office
P.O. Box 1450
Alexandria, VA 22313-1450
www.uspto.gov

Stites & Harbison PLLC
1199 North Fairfax Street
Suite 900
Alexandria VA 22314

MAILED
SEP 01 2011
PCT LEGAL ADMINISTRATION

In re Application of	:	
SMITH, John J.	:	
Application No. 12/865,892	:	DECISION ON PETITION
PCT No.: PCT/GB2009/000286	:	UNDER 37 CFR 1.47(b)
Int. Filing Date: 03 February 2009	:	
Priority Date: 04 February 2008	:	
Attorney Docket No.: P10159US00/DEJ	:	
For: WING CONTROL DEVICES	:	

In a decision mailed by this Office on 14 February 2011, the petition under 37 CFR 1.47(b) was dismissed without prejudice for failing to satisfy all the requirements of a grantable petition. Specifically, petitioner had not submitted (1) adequate evidence that the nonsigning inventor (John J. Smith) had received a copy of the complete application papers and refused to execute the application and (2) an adequate showing that the 37 CFR 1.47(b) applicant has a proprietary interest in the present application.

On 13 June 2011, petitioner filed the renewed petition considered herein. The 37 CFR 1.47(b) applicants provided evidence that a complete copy of the subject application was sent to the nonsigning inventor. The documents provided to John J. Smith included instructions to sign and return the declaration. These materials provide the required firsthand statement regarding the delivery to the nonsigning inventor of a copy of the complete application, and the nonsigning inventor's refusal to execute the application, with documentary evidence supporting the statement. (See declaration of Sue Stevens.) Further, the renewed petition includes supplemental materials which, in combination with the previously filed materials, adequately demonstrate that the 37 CFR 1.47(b) applicant has the necessary proprietary interest in the present application.

Therefore, the renewed petition under 37 CFR 1.47(b) is GRANTED. The application is accepted without the signature of nonsigning inventor John J. Smith.

In view of the receipt of the Renewed Petition under 37 CFR 1.47(b) filed 13 June 2011, which was a timely response to the Decision dated 14 Feburary 2011, the Notification of Abandonment mailed 12 May 2011 is hereby VACATED.

A notice of the acceptance of the application under 37 CFR 1.47(b) will be published in the Official Gazette, and a letter informing the nonsigning inventor of the application will be forwarded to the inventor's last-known address, as set forth in the renewed petition.

The application is being forwarded to the National Stage Processing Branch of the Office of PCT Operations for further processing. The date under 35 U.S.C. 371(c)(1), (c)(2), and (c)(4) is 26 October 2010.

Anthony Smith
Attorney-Advisor
Office PCT Legal Administration
Tel.: 571-272-3298

UNITED STATES PATENT AND TRADEMARK OFFICE

Commissioner for Patents
United States Patent and Trademark Office
P.O. Box 1450
Alexandria, VA 22313-1450
www.uspto.gov

John J. Smith
Hawkridge
48 Littledean Hill Road
Cinderford
Gloucestershire
GL14 4BJ

MAILED

SEP 01 2011

PCT LEGAL ADMINISTRATION

In re Application of
SMITH, John J.
Application No. 12/865,892
PCT No.: PCT/GB2009/000286
Int. Filing Date: 03 February 2009
Priority Date: 04 February 2008
Attorney Docket No.: P10159US00/DEJ
For: WING CONTROL DEVICES

Dear John J. Smith:

You are named as an inventor in the above identified United States patent application, filed under the provisions of 37 CFR 1.47(b) and 35 U.S.C. 116. Should a patent be granted, you will be designated as an inventor.

As a named inventor, you are entitled to inspect any paper in the file wrapper of the application, order copies of all or any part thereof (at a prepaid cost per 37 CFR 1.19) or to make your position of record in the application. Alternatively, you may arrange to do any of the preceding through a registered patent agent or attorney presenting written authorization from you. If you care to join in the application, counsel of record (see below) would presumably assist you. Joining in the application would entail the filing of an appropriate oath or declaration by you pursuant to 37 CFR 1.63.

Anthony Smith
Attorney-Advisor
Office of PCT Legal Administration
Tel: (571) 272-3298

Counsel of Record:
Stites & Harbison PLLC
1199 North Fairfax Street
Suite 900
Alexandria VA 22314

08 SEP 2010

UNITED STATES PATENT AND TRADEMARK OFFICE

Commissioner for Patents
United States Patent and Trademark Office
P.O. Box 1450
Alexandria, VA 22313-1450
www.uspto.gov

Shiloh et al.
99 John St., Suite 2303
New York NY 10038

In re Application of	:	
GREENBERG et al.	:	
Application No.: 12/865,899	:	DECISION ON
PCT No.: PCT/IB2009/050029	:	
Int. Filing Date: 07 January 2009	:	PETITION UNDER
Priority Date: 07 January 2008	:	
Attorney Docket No.: PTS-P-00215-US	:	37 CFR 1.137(b)
For: DEVICE AND METHOD FOR PERFORMING	:	
TREATMENT IN A PRECARDIAL SPACE	:	

This decision is in response to applicants' submission filed 03 August 2010.

BACKGROUND

On 07 January 2009, applicants filed international application PCT/IB2009/050029 which designated the U.S. and claimed a priority date of 07 January 2008. A copy of the international application was communicated to the United States Patent and Trademark Office (USPTO) from the International Bureau on 16 July 2009. The thirty-month period for paying the basic national fee in the United States expired at midnight on 07 July 2010.

On 03 August 2010, applicants filed a transmittal letter for entry into the national stage in the United States, which was accompanied by, *inter alia*, the U.S. basic national fee, a declaration of the inventors, and a petition under 37 CFR 1.137(b).

DISCUSSION

A petition to revive the present application under 37 CFR 1.137(b) must include:

(1) The required reply;
(2) The petition fee;
(3) A statement that the entire delay in filing the required reply from the due date for the reply until the filing of a grantable petition was unintentional.

As to item (1), applicant submitted the basic national fee on 03 August 2010.

As to item (2), applicant submitted the petition fee on 03 August 2010.

As to item (3), the required statement has been provided.

A review of the application file reveals that, with the filing of the present petition and accompanying papers, a proper response has been submitted and all of the requirements of 37 CFR 1.137(b) for revival have been satisfied and revival is therefore appropriate.

The declaration of the inventor filed 03 August 2010 is in compliance with 37 CFR 1.497(a)-(b).

CONCLUSION

The petition under 37 CFR 1.137(b) is **GRANTED** for the reasons set forth above.

This application is being forwarded to the National Stage Processing Branch of the Office of PCT Operations to continue national stage processing of the application.

/Daniel Stemmer/

Daniel Stemmer
Legal Examiner
PCT Legal Affairs
Office of Patent Cooperation Treaty
Legal Administration
Telephone: (571) 272-3301

UNITED STATES PATENT AND TRADEMARK OFFICE

Commissioner for Patents
United States Patent and Trademark Office
P.O. Box 1450
Alexandria, VA 22313-1450
www.uspto.gov

MAILED

DEC 01 2010

PCT LEGAL ADMINISTRATION

The Translational Genomics Research Institute
445 N. 5th Street
Phoenix AZ 85004

In re Application of	:	
WANG et al.	:	
Application No.: 12/865,903	:	DECISION on
PCT No.: PCT/US09/32917	:	
Int. Filing Date: 03 February 2009	:	PETITION
Priority Date: 04 February 2008	:	
Attorney Docket No.: 071106-050	:	UNDER 37 CFR 1.137(b)
For: COMPOUNDS, PHARMACEUTICAL	:	
COMPOSITIONS AND METHODS OF USE OF HYDRO-XAMIC ACID DERIVATIVES	:	

The petition to revive under 37 CFR 1.137(b) filed 28 September 2010 in the above-captioned application is hereby **GRANTED** as follows:

Applicant's statement that "the entire delay in filing the required reply from the due date for the required reply until the filing of a grantable petition under 37 CFR 1.137(b) was unintentional" meets the requirements of 37 CFR 1.137(b)(3).

A review of the application file reveals that the basic national fee has now been provided. The required petition fee of $810 was also paid. Thus, the requirements of 37 CFR 1.137(b) have been satisfied. Therefore, the request to revive the application abandoned under 35 U.S.C. 371(d) is granted as to the National stage in the United States of America.

The application will be forwarded to the United States Designated/Elected Office for further processing including issuance of a Notification of Missing Requirements indicating, *inter alia*, that an oath or declaration, in compliance with 37 CFR 1.497(a) and (b), is required. The declaration submitted with the petition does not properly identify the application to which it is directed.

/Cynthia M. Kratz/
Cynthia M. Kratz
Attorney Advisor
PCT Legal Office
Office of PCT Legal Administration
Telephone: (571) 272-3286

UNITED STATES PATENT AND TRADEMARK OFFICE

Commissioner for Patents
United States Patent and Trademark Office
P.O. Box 1450
Alexandria, VA 22313-1450
www.uspto.gov

MAILED

NOV 10 2011

PCT LEGAL ADMINISTRATION

The Translational Genomics Research Institute
445 N. 5th Street
Phoenix AZ 85004

In re Application of WANG et al. Application No.: 12/865,903 PCT No.: PCT/US09/32917 Int. Filing Date: 03 February 2009 Priority Date: 04 February 2008 Attorney Docket No.: 071106-050 For: COMPOUNDS, PHARMACEUTICAL COMPOSITIONS AND METHODS OF USE OF HYDROXAMIC ACID DERIVATIVES	DECISION on PETITION UNDER 37 CFR 1.137(b)

The petition to revive under 37 CFR 1.137(b) filed 08 September 2011 in the above-captioned application is hereby **GRANTED** as follows:

Applicant's statement that "the entire delay in filing the required reply from the due date for the required reply until the filing of a grantable petition under 37 CFR 1.137(b) was unintentional" meets the requirements of 37 CFR 1.137(b)(3).

A review of the application file reveals that the basic national fee has now been provided. The required petition fee of $810 was also paid. In response to the 03 January 2011 Notification of Missing Requirements, Applicant filed the proper reply; additional claims fees, an executed declaration in compliance with 37 CFR 1.497(a) and (b) and the surcharge for filing the declaration after the thirty month period. Thus, the requirements of 37 CFR 1.137(b) have been satisfied. Therefore, the request to revive the application abandoned under 35 U.S.C. 371(d) is granted as to the National stage in the United States of America.

The application will be forwarded to the United States Designated/Elected Office for further processing. The 35 U.S.C. 371(c)(1), (c)(2), and (c)(4) date is 08 September 2011.

/Cynthia M. Kratz/
Cynthia M. Kratz
Attorney Advisor
PCT Legal Office
Office of PCT Legal Administration
Telephone: (571) 272-3286

PTO/SB/20PCT-EP (05-10)
Approved for use through 01/31/2012. OMB 0651-0058
U.S. Patent and Trademark Office; U. S. DEPARTMENT OF COMMERCE
Under the Paperwork Reduction Act of 1995, no persons are required to respond to a collection of information unless it displays a valid OMB control number.

REQUEST FOR PARTICIPATION IN THE PATENT COOPERATION TREATY - PATENT PROSECUTION HIGHWAY (PCT-PPH) PILOT PROGRAM BETWEEN THE EUROPEAN PATENT OFFICE (EPO) AND THE USPTO

Application No:	12/865,911	Filing date:	August 03, 2010
First Named Inventor:	Grahame Knowles		
Title of the Invention:	Torque Protection Device and Torque Transmission Assembly		

THIS REQUEST FOR PARTICIPATION IN THE PCT-PPH PILOT PROGRAM ALONG WITH THE REQUIRED DOCUMENTS MUST BE SUBMITTED VIA EFS-WEB. INFORMATION REGARDING EFS-WEB IS AVAILABLE AT HTTP://WWW.USPTO.GOV/EBC/EFS_HELP.HTML

APPLICANT HEREBY REQUESTS PARTICIPATION IN THE PCT-PPH PROGRAM AND PETITIONS TO MAKE THE ABOVE-IDENTIFIED APPLICATION SPECIAL UNDER THE PCT-PPH PROGRAM.

The above-identified application is (1) a national stage entry of the corresponding PCT application, or (2) a national stage entry of another PCT application which claims priority to the corresponding PCT application, or (3) a national application that claims domestic/ foreign priority to the corresponding PCT application, or (4) a national application which forms the basis for the priority claim in the corresponding PCT application, or (5) a continuing application of a U.S. application that satisfies one of (1) to (4) above, or (6) a U.S. application that claims domestic benefit to a U.S. provisional application which forms the basis for the priority claim in the corresponding PCT application.

The corresponding PCT application number(s) is/are: PCT/EP2009/050895

The international date of the corresponding PCT application(s) is/are:

January 28, 2009

I. List of Required Documents:

a. **A copy of the latest international work product (WO/ISA, WO/IPEA, or IPER) in the above–identified corresponding PCT application(s)**

☐ Is attached

☑ Is not attached because the document is already in the U.S. application.

b. **A copy of all claims which were indicated as having novelty, inventive step and industrial applicability in the above-identified corresponding PCT application(s).**

☐ Is attached.

☑ Is not attached because the document is already in the U.S. application.

c. **English translations of the documents in a. and b. above are attached (if the documents are not in the English language). A statement that the English translation is accurate is attached for the document in b. above.**

This collection of information is required by 35 U.S.C. 119, 37 CFR 1.55, and 37 CFR 1.102(d). The information is required to obtain or retain a benefit by the public, which is to file (and by the USPTO to process) an application. Confidentiality is governed by 35 U.S.C. 122 and 37 CFR 1.11 and 1.14. This collection is estimated to take 2 hours to complete, including gathering, preparing, and submitting the completed application form to the USPTO. Time will vary depending upon the individual case. Any comments on the amount of time you require to complete this form and/or suggestions for reducing this burden should be sent to the Chief Information Officer, U.S. Patent and Trademark Office, U.S. Department of Commerce, P.O. Box 1450, Alexandria, VA 22313-1450. DO NOT SEND FEES OR COMPLETED FORMS TO THIS ADDRESS.

Approved for use through 01/31/2012. OMB 0651-0058
U.S.Patent and Trademark Office; U.S. DEPARTMENT OF COMMERCE

Under the Paperwork Reduction Act of 1995, no persons are required to respond to a collection of information unless it displays a valid OMB control number.

REQUEST FOR PARTICIPATION IN THE PCT-PPH PILOT PROGRAM BETWEEN THE EPO AND THE USPTO

(continued)

Application No.:	12/865,911
First Named Inventor:	Grahame Knowles

d. **(1) An information disclosure statement listing the documents cited in the international work products (ISR, WO/ISA, WO/IPEA, IPER) of the corresponding PCT application.**

☐ Is attached

☑ Has already been filed in the above-identified U.S. application on August 03, 2010

(2) Copies of all documents (except) for U.S. patents or U.S. patent application publications)

☐ Are attached.

☑ Have already been filed in the above-identified U.S. application on August 03, 2010

II. Claims Correspondence Table:

Claims in US Application	Patentable Claims in the corresponding PCT Application	Explanation regarding the correspondence
11	1	US claim as per Preliminary Amendment filed 08/03/2010
12	2	US claim as per Preliminary Amendment filed 08/03/2010
13	3	US claim as per Preliminary Amendment filed 08/03/2010
14	4	US claim as per Preliminary Amendment filed 08/03/2010
15	5	US claim as per Preliminary Amendment filed 08/03/2010
16	6	US claim as per Preliminary Amendment filed 08/03/2010
17	7	US claim as per Preliminary Amendment filed 08/03/2010
18	8	US claim as per Preliminary Amendment filed 08/03/2010
19	9	US claim as per Preliminary Amendment filed 08/03/2010
20	10	US claim as per Preliminary Amendment filed 08/03/2010
21	9, 2	US claim as per Preliminary Amendment filed 08/03/2010
22	9, 3	US claim as per Preliminary Amendment filed 08/03/2010
23	9, 4	US claim as per Preliminary Amendment filed 08/03/2010
24	9, 5	US claim as per Preliminary Amendment filed 08/03/2010
25	9, 6	US claim as per Preliminary Amendment filed 08/03/2010
26	9, 7	US claim as per Preliminary Amendment filed 08/03/2010
27	9, 8	US claim as per Preliminary Amendment filed 08/03/2010

III. All the claims in the US application sufficiently correspond to the patentable claims in the corresponding PCT application.

Signature /Tina Gonka/	Date May 03, 2011
Name (Print/Typed) Tina Gonka	Registration Number L0623

Privacy Act Statement

The **Privacy Act of 1974 (P.L. 93-579)** requires that you be given certain information in connection with your submission of the attached form related to a patent application or patent. Accordingly, pursuant to the requirements of the Act, please be advised that: (1) the general authority for the collection of this information is 35 U.S.C. 2(b)(2); (2) furnishing of the information solicited is voluntary; and (3) the principal purpose for which the information is used by the U.S. Patent and Trademark Office is to process and/or examine your submission related to a patent application or patent. If you do not furnish the requested information, the U.S. Patent and Trademark Office may not be able to process and/or examine your submission, which may result in termination of proceedings or abandonment of the application or expiration of the patent.

The information provided by you in this form will be subject to the following routine uses:

1. The information on this form will be treated confidentially to the extent allowed under the Freedom of Information Act (5 U.S.C. 552) and the Privacy Act (5 U.S.C 552a). Records from this system of records may be disclosed to the Department of Justice to determine whether disclosure of these records is required by the Freedom of Information Act.
2. A record from this system of records may be disclosed, as a routine use, in the course of presenting evidence to a court, magistrate, or administrative tribunal, including disclosures to opposing counsel in the course of settlement negotiations.
3. A record in this system of records may be disclosed, as a routine use, to a Member of Congress submitting a request involving an individual, to whom the record pertains, when the individual has requested assistance from the Member with respect to the subject matter of the record.
4. A record in this system of records may be disclosed, as a routine use, to a contractor of the Agency having need for the information in order to perform a contract. Recipients of information shall be required to comply with the requirements of the Privacy Act of 1974, as amended, pursuant to 5 U.S.C. 552a(m).
5. A record related to an International Application filed under the Patent Cooperation Treaty in this system of records may be disclosed, as a routine use, to the International Bureau of the World Intellectual Property Organization, pursuant to the Patent Cooperation Treaty.
6. A record in this system of records may be disclosed, as a routine use, to another federal agency for purposes of National Security review (35 U.S.C. 181) and for review pursuant to the Atomic Energy Act (42 U.S.C. 218(c)).
7. A record from this system of records may be disclosed, as a routine use, to the Administrator, General Services, or his/her designee, during an inspection of records conducted by GSA as part of that agency's responsibility to recommend improvements in records management practices and programs, under authority of 44 U.S.C. 2904 and 2906. Such disclosure shall be made in accordance with the GSA regulations governing inspection of records for this purpose, and any other relevant (*i.e.*, GSA or Commerce) directive. Such disclosure shall not be used to make determinations about individuals.
8. A record from this system of records may be disclosed, as a routine use, to the public after either publication of the application pursuant to 35 U.S.C. 122(b) or issuance of a patent pursuant to 35 U.S.C. 151. Further, a record may be disclosed, subject to the limitations of 37 CFR 1.14, as a routine use, to the public if the record was filed in an application which became abandoned or in which the proceedings were terminated and which application is referenced by either a published application, an application open to public inspection or an issued patent.
9. A record from this system of records may be disclosed, as a routine use, to a Federal, State, or local law enforcement agency, if the USPTO becomes aware of a violation or potential violation of law or regulation.

UNITED STATES PATENT AND TRADEMARK OFFICE

UNITED STATES DEPARTMENT OF COMMERCE
United States Patent and Trademark Office
Address: COMMISSIONER FOR PATENTS
P.O. Box 1450
Alexandria, Virginia 22313-1450
www.uspto.gov

APPLICATION NO.	FILING DATE	FIRST NAMED INVENTOR	ATTORNEY DOCKET NO.	CONFIRMATION NO.
12/865,911	08/03/2010	Grahame Knowles	2007P18750WOUS	7385

22116 7590 05/25/2011
SIEMENS CORPORATION
INTELLECTUAL PROPERTY DEPARTMENT
170 WOOD AVENUE SOUTH
ISELIN, NJ 08830

EXAMINER
SKROUPA, JOSHUA

ART UNIT	PAPER NUMBER
3679	

MAIL DATE	DELIVERY MODE
05/25/2011	PAPER

Please find below and/or attached an Office communication concerning this application or proceeding.

The time period for reply, if any, is set in the attached communication.

UNITED STATES PATENT AND TRADEMARK OFFICE

Commissioner for Patents
United States Patent and Trademark Office
P.O. Box 1450
Alexandria, VA 22313-1450
www.uspto.gov

MAY 25 2011

SIEMENS CORPORATION
INTELLECTUAL PROPERTY DEPARTMENT
170 WOOD AVENUE SOUTH
ISELIN NJ 08830

In re application of Grahame Knowles Application No. 12/865,911 Filed: August 03, 2010 For: TORQUE PROTECTION DEVICE AND TORQUE TRANSMISSION ASSEMBLY	**DECISION ON REQUEST TO PARTICIPATE IN PATENT PROSECUTION HIGHWAY PROGRAM AND PETITION TO MAKE SPECIAL 37 CFR 1.102(a)**

This is a decision on the request to participate in the Patent Prosecution Highway (PPH) program and the petition under 37 CFR 1.102(a), filed May 03, 2011 to make the above-identified application special.

The request and petition are **GRANTED**.

A grantable request to participate in the PPH program and petition to make special require:

(1) The U.S. application must disclose an eligible relationship to one or more PCT applications filed in the EPO or USPTO;
(2) Applicant must submit a copy of the allowable/patentable claim(s) from the PCT application(s) latest international work product (the written opinion or the IPER) along with an English translation thereof and a statement that the English translation is accurate;
(3) All the claims in the U.S. application must sufficiently correspond or be amended to sufficiently correspond to the allowable/patentable claim(s) in the PCT application(s);
(4) Examination of the U.S. application has not begun;
(5) Applicant must submit a copy of the latest international work product from the PCT application containing the allowable/patentable claim(s) along with an English translation thereof and a statement that the English translation is accurate;
(6) Applicant must submit an IDS listing the documents cited by the PCT examiner in the international work product along with copies of documents except U.S. patents or U.S. patent application publications.

In light of preliminary amendment filed on August 03, 2010, the request to participate in the PPH program complies with the above requirements. Therefore, the above-identified application has been accorded "special" status.

All other inquiries concerning the examination or status of the application should be directed to the Patent Application Information Retrieval (PAIR) system.

The application is being forwarded to the examiner for action on the merits commensurate with this decision.

Any inquiry regarding this decision should be directed to Mikado Buiz, Quality Assurance Specialist, at (571) 272-6578.

/ Mikado Buiz /

Mikado Buiz,
Quality Assurance Specialist
Technology Center 3600

MB/MB: 05/24/11

UNITED STATES PATENT AND TRADEMARK OFFICE

Commissioner for Patents
United States Patent and Trademark Office
P.O. Box 1450
Alexandria, VA 22313-1450
www.uspto.gov

GREENLEE SULLIVAN P.C.
4875 PEARL EAST CIRCLE
SUITE 200
BOULDER, CO 80301

MAILED

NOV 03 2011

OFFICE OF PETITIONS

APPLICANTS: NICAUD, et al.
Appl. No.: 12/866,022
International Filing Date: February 5, 2009
Title: METHOD FOR THE TARGETED INTEGRATION OF MULTIPLE COPIES OF A GENE OF INTEREST IN A YARROWIA STRAIN
Attorney Docket No.: 97-10
Pub. No.: US 2011/0053219 A1
Pub. Date: March 3, 2011

This is a decision in response to the communication, filed April 8, 2011, entitled "1. Second Request for Corrected Filing Receipt and Notice of Acceptance of Application under 35 U.S.C. 37 and 37 CFR 1.495 and 2. Request for Corrected Publication of Application." The delay in responding is regretted; however, applicants are reminded that 37 CFR 1.4(c) warns that "[s]ince different matters may be considered by different branches or sections of the United States Patent and Trademark Office, each distinct subject, inquiry or order must be contained in a separate paper to avoid confusion and delay in answering papers dealing with different subjects." As it is noted that a corrected filing receipt has been mailed, this decision addresses the request for corrected publication.

Applicants request that the application be republished because the patent application publication contains a material error on the front page of the publication wherein the International Filing Date of the parent PCT application is incorrect.

The request is granted

The corrected patent application publication will be published in due course, unless the patent issues before the application is republished.

Inquiries relating to this matter may be directed to Sherry D. Brinkley at (571) 272-3204.

/Christopher Bottorff/

Christopher Bottorff
Petitions Examiner
Office of Petitions

UNITED STATES PATENT AND TRADEMARK OFFICE

COMMISSIONER FOR PATENTS
UNITED STATES PATENT AND TRADEMARK OFFICE
P.O. BOX 1450
ALEXANDRIA, VA 22313-1450
www.uspto.gov

NOKIA, INC.
6021 CONNECTION DRIVE, MS 2-5-520
IRVING, TX 75039

MAILED
DEC 29 2010
PCT LEGAL ADMINISTRATION

In re Application of LINDH et al	:	
U.S. Application No.: 12/866,028	:	
PCT Application No.: PCT/IB2009/000187	:	
Int. Filing Date: 03 February 2009	:	DECISION
Priority Date Claimed: 04 February 2008	:	
Attorney Docket No.: NC63631US-PCT	:	
For: COMBINING CCE' S FOR POWER BALANCING	:	

This is in response to applicant's correspondence filed 02 December 2010, which is being treated as a petition under 37 CFR 1.497(d).

BACKGROUND

On 03 February 2009, applicant filed international application PCT/IB2009/000187, which claimed priority of an earlier United States application filed 04 February 2008. A copy of the international application was communicated to the USPTO from the International Bureau on 13 August 2009. The thirty-month period for paying the basic national fee in the United States expired on 04 August 2010.

On 03 August 2010, applicant filed national stage papers in the United States Designated/Elected Office (DO/EO/US). The submission was accompanied by, *inter alia*, the basic national fee required by 35 U.S.C. 371(c)(1).

On 02 September 2010, the DO/EO/US mailed a Notification of Missing Requirements Under 35 U.S.C. 371 (Form PCT/DO/EO/905), which indicated that an oath or declaration in compliance with 37 CFR 1.497 must be filed.

On 02 December 2010, applicant filed the present petition under 37 CFR 1.497(d).

DISCUSSION

The petition states that Jussi Ojala should be removed as an inventor and that Jari Mattila should be added as an inventor.

37 CFR 1.497(d) states,

> If the oath or declaration filed pursuant to 35 U.S.C. 371(c)(4) and this section names an inventive entity different from the inventive entity set forth in the international application, or if a change to the inventive entity has been effected under PCT Rule 92bis subsequent to the execution of any oath or declaration which was filed in the application under PCT Rule 4.17(iv) or this section and the inventive entity thus changed is different from the inventive entity identified in any such oath or declaration, applicant must submit:
>
> (1) A statement from each person being added as an inventor and from each person being deleted as an inventor that any error in inventorship in the international application occurred without deceptive intention on his or her part;
>
> (2) The processing fee set forth in § 1.17(i); and
>
> (3) If an assignment has been executed by any of the original named inventors, the written consent of the assignee (see § 3.73(b) of this chapter); and
>
> (4) Any new oath or declaration required by paragraph (f) of this section.

With regard to item (1) above, the requisite statements have been provided.

With regard to item (2) above, the requisite processing fee has been provided.

With regard to item (3) above, written consent of the assignee has not been provided.

With regard to item (4) above, a new declaration under 37 CFR 1.497(f) is not required.

CONCLUSION

For the reasons above, the petition under 37 CFR 1.497(d) is DISMISSED without prejudice.

If reconsideration on the merits of the petition is desired, a proper response must be filed within TWO (2) MONTHS from the mail date of this decision. Failure to timely file a proper response will result in ABANDONMENT of the application. Extensions of time are available under 37 CFR 1.136(a). Any reconsideration request should include a cover letter entitled "Renewed Petition Under 37 CFR 1.497(d)". No additional petition fee is required.

Any further correspondence with respect to this matter may be filed electronically via EFS-Web selecting the document description "Petition for review and processing by the PCT Legal Office" or by mail addressed to Mail Stop PCT, Commissioner for Patents, Office of PCT

Legal Administration, P.O. Box 1450, Alexandria, Virginia 22313-1450, with the contents of the letter marked to the attention of the Office of PCT Legal Administration.

Bryan Lin
PCT Legal Examiner
PCT Legal Office

Telephone: 571-272-3303
Facsimile: 571-273-0459

UNITED STATES PATENT AND TRADEMARK OFFICE

COMMISSIONER FOR PATENTS
UNITED STATES PATENT AND TRADEMARK OFFICE
P.O. BOX 1450
ALEXANDRIA, VA 22313-1450
www.uspto.gov

NOKIA, INC.
6021 CONNECTION DRIVE, MS 2-5-520
IRVING, TX 75039

MAILED

APR 29 2011

PCT LEGAL ADMINISTRATION

In re Application of LINDH et al :
U.S. Application No.: 12/866,028 :
PCT Application No.: PCT/IB2009/000187 :
Int. Filing Date: 03 February 2009 : DECISION
Priority Date Claimed: 04 February 2008 :
Attorney Docket No.: NC63631US-PCT :
For: COMBINING CCE' S FOR POWER :
BALANCING :

This is in response to applicant's renewed petition under 37 CFR 1.497(d) filed 28 February 2011.

BACKGROUND

On 03 February 2009, applicant filed international application PCT/IB2009/000187, which claimed priority of an earlier United States application filed 04 February 2008. A copy of the international application was communicated to the USPTO from the International Bureau on 13 August 2009. The thirty-month period for paying the basic national fee in the United States expired on 04 August 2010.

On 03 August 2010, applicant filed national stage papers in the United States Designated/Elected Office (DO/EO/US). The submission was accompanied by, *inter alia*, the basic national fee required by 35 U.S.C. 371(c)(1).

On 02 September 2010, the DO/EO/US mailed a Notification of Missing Requirements Under 35 U.S.C. 371 (Form PCT/DO/EO/905), which indicated that an oath or declaration in compliance with 37 CFR 1.497 must be filed.

On 02 December 2010, applicant filed a petition under 37 CFR 1.497(d).

On 29 December 2010, this Office mailed a decision dismissing the 02 December 2010 petition.

On 28 February 2011, applicant filed the instant renewed petition under 37 CFR 1.497(d).

DISCUSSION

The petition states that Jussi Ojala should be removed as an inventor and that Jari Mattila should be added as an inventor.

37 CFR 1.497(d) states,

> If the oath or declaration filed pursuant to 35 U.S.C. 371(c)(4) and this section names an inventive entity different from the inventive entity set forth in the international application, or if a change to the inventive entity has been effected under PCT Rule 92bis subsequent to the execution of any oath or declaration which was filed in the application under PCT Rule 4.17(iv) or this section and the inventive entity thus changed is different from the inventive entity identified in any such oath or declaration, applicant must submit:
>
> (1) A statement from each person being added as an inventor and from each person being deleted as an inventor that any error in inventorship in the international application occurred without deceptive intention on his or her part;
>
> (2) The processing fee set forth in § 1.17(i); and
>
> (3) If an assignment has been executed by any of the original named inventors, the written consent of the assignee (see § 3.73(b) of this chapter); and
>
> (4) Any new oath or declaration required by paragraph (f) of this section.

Petitioner previously satisfied items (1), (2), and (4) above.

With regard to item (3) above, written consent of the assignee has been provided.

CONCLUSION

For the reasons above, the renewed petition under 37 CFR 1.497(d) is GRANTED.

The application has an International Filing Date under 35 U.S.C. 363 of 03 February 2009, and a date under 35 U.S.C. 371(c)(1), (c)(2), and (c)(4) of 02 December 2010.

This application is being forwarded to the United States Designated/Elected Office (DO/EO/US) for further processing in accordance with this decision.

Bryan Lin

Bryan Lin
PCT Legal Examiner
PCT Legal Office

Telephone: 571-272-3303
Facsimile: 571-273-0459

UNITED STATES PATENT and TRADEMARK OFFICE

COMMISSIONER FOR PATENTS
UNITED STATES PATENT AND TRADEMARK OFFICE
P.O BOX 1450
ALEXANDRIA, VA 22313-1450
www.uspto.gov

WENDEROTH, LIND & PONACK, L.L.P.
1030 15th Street, N.W.,
Suite 400 East
Washington DC 20005-1503

MAILED
OCT 12 2010
PCT LEGAL ADMINISTRATION

In re Application of Yada et al Application No.: 12/866,071 PCT No.: PCT/JP2007/063147 Int. Filing Date: 29 June 2007 Priority Date: 29 June 2006 Attorney's Docket No.: 2010_0792A For: FAD-CONJUGATED GLUCOSE DEHYDROGENASE GENE	DECISION ON PETITION UNDER 37 CFR 1.137(b)

This decision is in response to applicants' "Petition For Revival of an International Application for Patent Designating the U.S. Abandoned Unintentionally Under 37 CFR 1.137(b)," filed on 04 August 2010.

BACKGROUND

On 29 June 2007, this international application was filed, claiming an earliest priority date of 29 June 2006.

The deadline for paying the basic national fee in the United States under 35 U.S.C. 371 and 37 CFR 1.495 was 29 December 2008. This international application became abandoned with respect to the United States at midnight on 29 December 2008 for failure to pay the required basic national fee.

On 04 August 2010, applicant filed the instant petition under 37 CFR 1.137(b) and Transmittal letter for entry into the national stage in the United States, which was accompanied by the petition fee, basic national fee, and an executed declaration.

DISCUSSION

A grantable petition to revive an abandoned application under 37 CFR 1.137(b) must be accompanied by (1) the required reply, unless previously filed. In a nonprovisional application abandoned for failure to prosecute, the required reply may be met by the filing of a continuing application; (2) the petition fee as set forth in § 1.17(m); and (3) a statement that the entire delay in filing the required reply from the due date for the reply until the filing of a grantable petition pursuant to this paragraph was unintentional. The Commissioner may require additional information where there is a question whether the delay was unintentional; and (4) any terminal disclaimer (and fee as set forth in § 1.20 (d)) required pursuant to paragraph (c) of this section.

Petitioner has provided: (1) the proper reply by submitting the basic national filing fee, (2) the petition fee set forth in §1.17(m) and (3) the proper statement under 137(b)(3). In this application, no terminal disclaimer is required.

Accordingly, the petition is deemed to satisfy requirements (1), (2), (3), and (4) under 37 CFR 1.137(b).

DECISION

The petition under 37 CFR 1.137(b) is **GRANTED**.

This application is being returned to the United States Designated/Elected Office (DO/EO/US) for continued processing under 35 U.S.C. 371.

Rafael Bacares
PCT Legal Examiner
PCT Legal Office
Telephone: (571) 272-3276
Facsimile: (571) 273-6459

UNITED STATES PATENT AND TRADEMARK OFFICE

UNITED STATES DEPARTMENT OF COMMERCE
United States Patent and Trademark Office
Address: COMMISSIONER FOR PATENTS
P.O. Box 1450
Alexandria, Virginia 22313-1450
www.uspto.gov

BIB DATA SHEET

CONFIRMATION NO. 9032

SERIAL NUMBER	FILING or 371(c) DATE	CLASS	GROUP ART UNIT	ATTORNEY DOCKET NO.
12/866,086	10/21/2010 RULE	273	3711	502388.120070

APPLICANTS

Cephas Edgar Howard, Billund, DENMARK;
Ditte Bruun Pedersen, Billund, DENMARK;

**** CONTINUING DATA ****************************

This application is a 371 of PCT/DK09/00030 02/05/2009

**** FOREIGN APPLICATIONS ****************************

DENMARK PA 2008 00154 02/05/2008

**** IF REQUIRED, FOREIGN FILING LICENSE GRANTED ****

10/28/2010

Foreign Priority claimed	☑ Yes ☐ No		STATE OR COUNTRY	SHEETS DRAWINGS	TOTAL CLAIMS	INDEPENDENT CLAIMS
35 USC 119(a-d) conditions met	☑ Yes ☐ No	☐ Met after Allowance	DENMARK	2	11	1
Verified and Acknowledged	/DOLORES R COLLINS/ Examiner's Signature	Initials				

ADDRESS

DAY PITNEY LLP
7 TIMES SQUARE
NEW YORK, NY 10036-7311
UNITED STATES

TITLE

GAMING DICE

FILING FEE RECEIVED		
1110	FEES: Authority has been given in Paper No._____ to charge/credit DEPOSIT ACCOUNT No._____ for following:	☐ All Fees ☐ 1.16 Fees (Filing) ☐ 1.17 Fees (Processing Ext. of time) ☐ 1.18 Fees (Issue) ☐ Other _____ ☐ Credit

UNITED STATES PATENT AND TRADEMARK OFFICE

Commissioner for Patents
United States Patent and Trademark Office
P.O. Box 1450
Alexandria, VA 22313-1450
www.uspto.gov

MAILED

FEB 25 2011

PCT LEGAL ADMINISTRATION

OLIFF & BERRIDGE, PLC
P.O. BOX 320850
ALEXANDRIA VA 22320-4850

In re Application of:
ARAI et al.
U.S. Application No.: 12/866,143
PCT No.: PCTJP2009/051800
International Filing Date: 03 February 2009
Priority Date: 04 February 2008
Attorney's Docket No.: 146359
For: TWISTABLE CONTAINER FOR ELEVATING A SOLID STICK

DECISION ON REFUND REQUEST

This decision is issued in response to applicant's "Renewed Request for Refund to Deposit Account" filed 14 February 2011 seeking a refund of $130. This amount represents the surcharge charged for failure to file an oath or declaration within thirty months of the priority date.

The refund request is GRANTED and Deposit Account No. 15–0461 will be credited with a refund of $130, as requested.

As stated by applicant in the present refund request, applicant filed a declaration under PCT Rule 4.17 during the international phase of the application, prior to the expiration of thirty months from the priority date. The surcharge charged to applicant, based as it was on applicant's purported failure to file an oath or declaration within thirty months of the priority date, is therefore appropriately refunded.

Additionally, a review of the application file reveals that the basic national fee, an English translation of the international application, and a copy of the international application (which included a Declaration of Inventorship under PCT Rules 4.17(iv) and 51bis.1(a)(iv)) were filed with the USPTO on 04 August 2010, the date which the requirements set forth in 35 U.S.C. 371(c) for entry into the national stage was completed.

Therefore, the Notification of Acceptance and Official Filing Receipt mailed 01 November 2010 identifying the 35 U.S.C. 371(c) date as 15 October 2010 are hereby vacated.

The declaration filed on 04 August 2010 is in compliance with 37 CFR 1.497(a)-(b). The application has an international filing date of 03 February 2009 under 35 U.S.C. 363 and a date of 04 August 2010 under 35 U.S.C. 371(c).

This application is being returned to the United States Designated/Elected Office (DO/EO/US) for treatment in accordance with this decision, that is, for mailing of a Notification of Acceptance of Application (Form PCT/DO/EO/903) and Official Filing Receipt which identifies a date of **04 August 2010** under 35 U.S.C. 371(c).

Anthony Smith
Attorney-Advisor
Office of PCT Legal Administration
Telephone: 571-272-3298
Fax: 571-273-0459

UNITED STATES PATENT AND TRADEMARK OFFICE

UNITED STATES DEPARTMENT OF COMMERCE
United States Patent and Trademark Office
Address: COMMISSIONER FOR PATENTS
P.O. Box 1450
Alexandria, Virginia 22313-1450
www.uspto.gov

APPLICATION NO.	FILING DATE	FIRST NAMED INVENTOR	ATTORNEY DOCKET NO.	CONFIRMATION NO.
12/866,153	08/04/2010	Kiyotaka Yanagi	1217-102258	9407

7590 03/28/2012
THE WEBB LAW FIRM, P.C.
ONE GATEWAY CENTER
420 FT. DUQUESNE BLVD, SUITE 1200
PITTSBURGH, PA 15222

EXAMINER
WILLIAMS, HEZRON

ART UNIT	PAPER NUMBER
2856	

NOTIFICATION DATE	DELIVERY MODE
03/28/2012	ELECTRONIC

DECISION DISMISSING PETITION UNDER 37 CFR 1.138(d)

The declaration of express abandonment will not be recognized

This is in response to the petition under 37 CFR 1.138(d), requesting for a refund of any previously paid search fee and excess claims fee in the above-identified application.

The petition is dismissed.

The express abandonment will **not** be recognized for the reason(s) indicated below:

1. ☐ The petition was not filed in sufficient time to permit the appropriate officials to recognize the abandonment before an examination has been made of the application. See 37 CFR 1.138(d).
2. ☐ The petition was not signed by a party authorized by 37 CFR 1.33(b)(1), (3) or (4).
3. ☑ The application is not an application filed under 35 U.S.C. 111(a) on or after December 8, 2004.
4. ☐ The petition for express abandonment under 1.138(d) is dismissed because the applicant did not pay any search fee and excess claims fees in the above-identified application.

Telephone inquiries should be directed to the Office of Data Management at (571) 272-4200.

Mimi Farnel

Patent Publication Branch
Office of Data Management

FORM PET651D (Rev. 08/07)

UNITED STATES PATENT and TRADEMARK OFFICE

COMMISSIONER FOR PATENTS
UNITED STATES PATENT AND TRADEMARK OFFICE
P.O BOX 1450
ALEXANDRIA, VA 22313-1450
www.uspto.gov

DRINKER BIDDLE & REATH LLP
ONE LOGAN SQUARE,
SUITE 2000
PHILADELPHIA PA 19103-6996

MAILED
OCT 12 2010
PCT LEGAL ADMINISTRATION

In re Application of	: DECISION ON
William WAUGH.	:
Application No.: 12/866,161	:
PCT No.: PCT/GB2008/003342	:
Filing Date: 3 October 2008	: PETITION UNDER
Priority Date: 3 October 2007	:
Attorney's Docket No.: 36290-0647-00-US	:
For: METHOD OF MANUFACTURE... FUEL CELL	: 37 CFR 1.137(b)

This decision is in response to applicant's "PETITION FOR REVIVAL OF AN INTERNATIONAL APPLICATION FOR PATENT DESIGNATING THE U.S. ABANDONED UNINTENTIONALLY UNDER 37 C.F.R. 1.137(b)," filed on 4 August 2010.

BACKGROUND

On 3 October 2008, this international application was filed, claiming an earliest priority date of 3 October 2007.

The deadline for paying the basic national fee in the United States under 35 U.S.C. 371 and 37 CFR 1.495 was 3 April 2010. This international application became abandoned with respect to the United States at midnight on 3 April 2010 for failure to pay the required basic national fee.

On 4 August 2010, applicant filed in the United States Patent and Trademark Office (PTO) a transmittal letter for entry into the national stage in the U.S. under 35 U.S.C. 371, which was accompanied by, *inter alia*, the national basic fee, petition fee, and a petition under 37 CFR 1.137(b).

DISCUSSION

A grantable petition to revive an abandoned application under 37 CFR 1.137(b) must be accompanied by (1) the required reply, unless previously filed. In a nonprovisional application abandoned for failure to prosecute, the required reply may be met by the filing of a continuing application; (2) the petition fee as set forth in § 1.17(m); and (3) a statement that the entire delay in filing the required reply from the due date for the reply until the filing of a grantable petition pursuant to this paragraph was unintentional. The Commissioner may require additional information where there is a question whether the delay was unintentional; and (4) any terminal disclaimer (and fee as set forth in § 1.20 (d)) required pursuant to paragraph (c) of this section.

Petitioner has provided: (1) the proper reply by submitting the basic national filing fee, (2) the petition fee set forth in §1.17(m) and (3) the proper statement under 137(b)(3). In this application, no terminal disclaimer is required.

Accordingly, the petition is deemed to satisfy requirements (1), (2), (3), and (4) under 37 CFR 1.137(b).

DECISION

The petition under 37 CFR 1.137(b) is **GRANTED**.

This application is being returned to the United States Designated/Elected Office (DO/EO/US) for continued processing.

Rafael Bacares
PCT Legal Examiner
PCT Legal Office
Telephone: (571) 272-3276
Facsimile: (571) 273-0459

UNITED STATES PATENT AND TRADEMARK OFFICE

UNITED STATES DEPARTMENT OF COMMERCE
United States Patent and Trademark Office
Address: COMMISSIONER FOR PATENTS
P.O. Box 1450
Alexandria, Virginia 22313-1450
www.uspto.gov

APPLICATION NO.	FILING DATE	FIRST NAMED INVENTOR	ATTORNEY DOCKET NO.	CONFIRMATION NO.
12/866,165	10/01/2010	Wuri Andarmawanti Hapsari	17470/072001	9478

22511 7590 03/23/2011
OSHA LIANG L.L.P.
TWO HOUSTON CENTER
909 FANNIN, SUITE 3500
HOUSTON, TX 77010

EXAMINER
BOST, DWAYNE D

ART UNIT	PAPER NUMBER
2617	

NOTIFICATION DATE	DELIVERY MODE
03/23/2011	ELECTRONIC

Please find below and/or attached an Office communication concerning this application or proceeding.

The time period for reply, if any, is set in the attached communication.

Notice of the Office communication was sent electronically on above-indicated "Notification Date" to the following e-mail address(es):

docketing@oshaliang.com
buta@oshaliang.com
hathaway@oshaliang.com

UNITED STATES PATENT AND TRADEMARK OFFICE

Commissioner for Patents
United States Patent and Trademark Office
P.O. Box 1450
Alexandria, VA 22313-1450
www.uspto.gov

OSHA LIANG L.L.P.
TWO HOUSTON CENTER
909 FANNIN, SUITE 3500
HOUSTON TX 77010

In re Application of	:	
HAPSARI, WURI ANDARMAWANTI et al	:	DECISION ON REQUEST TO
Application No. 12/866,165	:	PARTICIPATE IN PATENT
Filed: October 1, 2010	:	PROSECUTION HIGHWAY
Attorney Docket No. 17470/072001	:	PROGRAM AND PETITION
	:	TO MAKE SPECIAL UNDER
	:	37 CFR 1.102(a)

This is a decision on the request to participate in the Patent Prosecution Highway (PPH) program and the petition under 37 CFR 1.102(a), filed February 1, 2011 to make the above-identified application special.

The request and petition are **GRANTED**.

A grantable request to participate in the PPH program and petition to make special require:

(1) The U.S. application must validly claim priority under 35 U.S.C. 119(a) to one or more applications filed in the JPO;
(2) Applicant must submit a copy of the allowable/patentable claim(s) from the JPO application(s) along with an English translation thereof and a statement that the English translation is accurate;
(3) All the claims in the U.S. application must sufficiently correspond or be amended to sufficiently correspond to the allowable/patentable claim(s) in the JPO application(s);
(4) Examination of the U.S. application has not begun;
(5) Applicant must submit a copy of all the office actions from each of the JPO application(s) containing the allowable/patentable claim(s) along with an English translation thereof and a statement that the English translation is accurate; and
(6) Applicant must submit an IDS listing the documents cited by the JPO examiner in the JPO office action along with copies of documents except U.S. patents or U.S. patent application publications.

The request to participate in the PPH program and petition comply with the above requirements. Accordingly, the above-identified application has been accorded "special" status.

Telephone inquiries concerning this decision should be directed to Michael Horabik at 571-272-3134.

All other inquiries concerning the examination or status of the application should be directed to Patent Application Information Retrieval (PAIR) system.

The application is undergoing pre-examination processing. Once it is released for examination, the application will be forwarded to the examiner for action on the merits commensurate with this decision.

/Wellington Chin/

Wellington Chin
Quality Assurance Specialist
Technology Center 2600
Communications

PTO/SB/20PCT-US (09-10)
Approved for use through 01/31/2012. OMB 0651-0058
U.S. Patent and Trademark Office; U. S. DEPARTMENT OF COMMERCE
Under the Paperwork Reduction Act of 1995, no persons are required to respond to a collection of information unless it displays a valid OMB control number.

REQUEST FOR PARTICIPATION IN THE PATENT COOPERATION TREATY - PATENT PROSECUTION HIGHWAY (PCT-PPH) PILOT PROGRAM IN A U.S. APPLICATION WHERE THE USPTO WAS THE ISA OR IPEA

Application No:	12/866,186	Filing date:	September 30, 2010
First Named Inventor:	Jacek Grabiec		
Title of the Invention:	Gaming System Having Displays With Integrated Image Capture Capabilities		

THIS REQUEST FOR PARTICIPATION IN THE PCT-PPH PILOT PROGRAM ALONG WITH THE REQUIRED DOCUMENTS MUST BE SUBMITTED VIA EFS-WEB. INFORMATION REGARDING EFS-WEB IS AVAILABLE AT HTTP://WWW.USPTO.GOV/EBC/EFS_HELP.HTML

APPLICANT HEREBY REQUESTS PARTICIPATION IN THE PCT-PPH PROGRAM AND PETITIONS TO MAKE THE ABOVE-IDENTIFIED APPLICATION SPECIAL UNDER THE PCT-PPH PROGRAM.

The above-identified application is (1) a national stage entry of the corresponding PCT application, or (2) a national stage entry of another PCT application which claims priority to the corresponding PCT application, or (3) a national application that claims domestic/ foreign priority to the corresponding PCT application, or (4) a national application which forms the basis for the priority claim in the corresponding PCT application, or (5) a continuing application of a U.S. application that satisfies one of (1) to (4) above, or (6) a U.S. application that claims domestic benefit to a U.S. provisional application which forms the basis for the priority claim in the corresponding PCT application.

The corresponding PCT application number(s) is/are: PCT/US2009/034519

The international date of the corresponding PCT application(s) is/are:

February 19, 2009

I. List of Required Documents:

a. **A copy of the latest international work product (WO/ISA, WO/IPEA, or IPER) in the above–identified corresponding PCT application(s)**

- [x] Is attached
- [ ] Is not attached because the document is already in the U.S. application.

b. **A copy of all claims which were indicated as having novelty, inventive step and industrial applicability in the above-identified corresponding PCT application(s).**

- [x] Is attached.
- [ ] Is not attached because the document is already in the U.S. application.

c. **English translations of the documents in a. and b. above are attached (if the documents are not in the English language). A statement that the English translation is accurate is attached for the document in b. above.**

This collection of information is required by 35 U.S.C. 119, 37 CFR 1.55, and 37 CFR 1.102(d). The information is required to obtain or retain a benefit by the public, which is to file (and by the USPTO to process) an application. Confidentiality is governed by 35 U.S.C. 122 and 37 CFR 1.11 and 1.14. This collection is estimated to take 2 hours to complete, including gathering, preparing, and submitting the completed application form to the USPTO. Time will vary depending upon the individual case. Any comments on the amount of time you require to complete this form and/or suggestions for reducing this burden should be sent to the Chief Information Officer, U.S. Patent and Trademark Office, U.S. Department of Commerce, P.O. Box 1450, Alexandria, VA 22313-1450. DO NOT SEND FEES OR COMPLETED FORMS TO THIS ADDRESS.

Under the Paperwork Reduction Act of 1995, no persons are required to respond to a collection of information unless it displays a valid OMB control number.

REQUEST FOR PARTICIPATION IN THE PCT-PPH PILOT PROGRAM IN A U.S. APPLICATION WHERE THE USPTO WAS THE ISA OR IPEA

(continued)

Application No.:	12/866,186
First Named Inventor:	Jacek Grabiec

d. **(1) An information disclosure statement listing the documents cited in the international work products (ISR, WO/ISA, WO/IPEA, IPER) of the corresponding PCT application.**

☐ Is attached

☒ Has already been filed in the above-identified U.S. application on August 4, 2010

(2) Copies of all documents (except) for U.S. patents or U.S. patent application publications)

☐ Are attached.

☒ Have already been filed in the above-identified U.S. application on August 4, 2010

II. Claims Correspondence Table:

Claims in US Application	Patentable Claims in the corresponding PCT Application	Explanation regarding the correspondence
1-10, 16-25	1-10, 16-25	Identical

III. All the claims in the US application sufficiently correspond to the patentable claims in the corresponding PCT application.

Signature /Jason S. Kray, Reg. No. 66,926/	Date 07/11/2011
Name (Print/Typed) Jason S. Kray	Registration Number 66,926

Privacy Act Statement

The **Privacy Act of 1974 (P.L. 93-579)** requires that you be given certain information in connection with your submission of the attached form related to a patent application or patent. Accordingly, pursuant to the requirements of the Act, please be advised that: (1) the general authority for the collection of this information is 35 U.S.C. 2(b)(2); (2) furnishing of the information solicited is voluntary; and (3) the principal purpose for which the information is used by the U.S. Patent and Trademark Office is to process and/or examine your submission related to a patent application or patent. If you do not furnish the requested information, the U.S. Patent and Trademark Office may not be able to process and/or examine your submission, which may result in termination of proceedings or abandonment of the application or expiration of the patent.

The information provided by you in this form will be subject to the following routine uses:

1. The information on this form will be treated confidentially to the extent allowed under the Freedom of Information Act (5 U.S.C. 552) and the Privacy Act (5 U.S.C 552a). Records from this system of records may be disclosed to the Department of Justice to determine whether disclosure of these records is required by the Freedom of Information Act.
2. A record from this system of records may be disclosed, as a routine use, in the course of presenting evidence to a court, magistrate, or administrative tribunal, including disclosures to opposing counsel in the course of settlement negotiations.
3. A record in this system of records may be disclosed, as a routine use, to a Member of Congress submitting a request involving an individual, to whom the record pertains, when the individual has requested assistance from the Member with respect to the subject matter of the record.
4. A record in this system of records may be disclosed, as a routine use, to a contractor of the Agency having need for the information in order to perform a contract. Recipients of information shall be required to comply with the requirements of the Privacy Act of 1974, as amended, pursuant to 5 U.S.C. 552a(m).
5. A record related to an International Application filed under the Patent Cooperation Treaty in this system of records may be disclosed, as a routine use, to the International Bureau of the World Intellectual Property Organization, pursuant to the Patent Cooperation Treaty.
6. A record in this system of records may be disclosed, as a routine use, to another federal agency for purposes of National Security review (35 U.S.C. 181) and for review pursuant to the Atomic Energy Act (42 U.S.C. 218(c)).
7. A record from this system of records may be disclosed, as a routine use, to the Administrator, General Services, or his/her designee, during an inspection of records conducted by GSA as part of that agency's responsibility to recommend improvements in records management practices and programs, under authority of 44 U.S.C. 2904 and 2906. Such disclosure shall be made in accordance with the GSA regulations governing inspection of records for this purpose, and any other relevant (*i.e.*, GSA or Commerce) directive. Such disclosure shall not be used to make determinations about individuals.
8. A record from this system of records may be disclosed, as a routine use, to the public after either publication of the application pursuant to 35 U.S.C. 122(b) or issuance of a patent pursuant to 35 U.S.C. 151. Further, a record may be disclosed, subject to the limitations of 37 CFR 1.14, as a routine use, to the public if the record was filed in an application which became abandoned or in which the proceedings were terminated and which application is referenced by either a published application, an application open to public inspection or an issued patent.
9. A record from this system of records may be disclosed, as a routine use, to a Federal, State, or local law enforcement agency, if the USPTO becomes aware of a violation or potential violation of law or regulation.

REQUIRED DOCUMENT I(A)

The following document(s) include(s) a copy of the latest international work product in the corresponding PCT application

PATENT COOPERATION TREATY

PCT

INTERNATIONAL PRELIMINARY REPORT ON PATENTABILITY

(Chapter II of the Patent Cooperation Treaty)

(PCT Article 36 and Rule 70)

Applicant's or agent's file reference 247079-750WO	**FOR FURTHER ACTION**	See Form PCT/IPEA/416
International application No. PCT/US09/34519	International filing date *(day/month/year)* 19 February 2009 (19.02.2009)	Priority date *(day/month/year)* 21 February 2008 (21.02.2008)
International Patent Classification (IPC) or national classification and IPC IPC: A63F 9/24(2006.01) USPC: 463/31		
Applicant WMS GAMING INC.		

1. This report is the international preliminary examination report, established by this International Preliminary Examining Authority under Article 35 and transmitted to the applicant according to Article 36.
2. This REPORT consists of a total of 3 sheets, including this cover sheet.
3. This report is also accompanied by ANNEXES, comprising:
   a. ☒ *(sent to the applicant and to the International Bureau)* a total of 4 sheets, as follows:
      - ☐ sheets of the description, claims and/or drawings which have been amended and are the basis of this report and/or sheets containing rectifications authorized by this Authority (see Rule 70.16 and Section 607 of the Administrative Instructions).
      - ☐ sheets which supersede earlier sheets, but which this Authority considers contain an amendment that goes beyond the disclosure in the international application as filed, as indicated in item 4 of Box No. I and the Supplemental Box.

   b. ☐ *(sent to the International Bureau only)* a total of (indicate type and number of electronic carrier(s)) _____ , containing a sequence listing and/or tables related thereto, in electronic form only, as indicated in the Supplemental Box Relating to Sequence Listing (see Section 802 of the Administrative Instructions).
4. This report contains indications relating to the following items:

☒	Box No. I	Basis of the report
☐	Box No. II	Priority
☐	Box No. III	Non-establishment of opinion with regard to novelty, inventive step and industrial applicability
☐	Box No. IV	Lack of unity of invention
☒	Box No. V	Reasoned statement under Article 35(2) with regard to novelty, inventive step or industrial applicability; citations and explanations supporting such statement
☐	Box No. VI	Certain documents cited
☐	Box No. VII	Certain defects in the international application
☐	Box No. VIII	Certain observations on the international application

Date of submission of the demand 10 December 2009 (10.12.2009)	Date of completion of this report 08 February 2010 (08.02.2010)
Name and mailing address of the IPEA/ US Mail Stop PCT, Attn: IPEA/US Commissioner for Patents P.O. Box 1450 Alexandria, Virginia 22313-1450 Facsimile No. (571) 273-3201	Authorized officer Scott Jones Telephone No. (571) 272-6788

INTERNATIONAL PRELIMINARY REPORT ON PATENTABILITY

International application No.
PCT/US09/34519

Box No. I Basis of the report

1. With regard to the **language**, this report is based on:
   - [x] the international application in the language in which it was filed.
   - [ ] a translation of the international application into English, which is the language of a translation furnished for the purposes of:
     - [ ] international search (under Rules 12.3(a) and 23.1(b))
     - [ ] publication of the international application (under Rule 12.4(a))
     - [ ] international preliminary examination (under Rules 55.2(a) and/or 55.3(a))

2. With regard to the **elements** of the international application, this report is based on *(replacement sheets which have been furnished to the receiving Office in response to an invitation under Article 14 are referred to in this report as "originally filed" and are not annexed to this report)*:
   - [ ] the international application as originally filed/furnished
   - [x] the description:
     pages 1-19 as originally filed/furnished
     pages* NONE received by this Authority on
     pages* NONE received by this Authority on
   - [x] the claims:
     pages NONE as originally filed/furnished
     pages* NONE as amended (together with any statement) under Article 19
     pages* 20-23 received by this Authority on 09 December 2009 (09.12.2009)
     pages* NONE received by this Authority on
   - [x] the drawings:
     pages 1/9-9/9 as originally filed/furnished
     pages* NONE received by this Authority on
     pages* NONE received by this Authority on
   - [ ] a sequence listing and/or any related table(s) - see Supplemental Box Relating to Sequence Listing.

3. [ ] The amendments have resulted in the cancellation of:
   - [ ] the description, pages
   - [ ] the claims, Nos.
   - [ ] the drawings, sheets/figs
   - [ ] the sequence listing (*specify*):
   - [ ] any table(s) related to the sequence listing (*specify*):

4. [ ] This report has been established as if (some of) the amendments annexed to this report and listed below had not been made, since they have been considered to go beyond the disclosure as filed, as indicated in the Supplemental Box (Rule 70.2(c)).
   - [ ] the description, pages
   - [ ] the claims, Nos.
   - [ ] the drawings, sheets/figs
   - [ ] the sequence listing (*specify*):
   - [ ] any table(s) related to the sequence listing (*specify*):

5. [ ] This report has been established taking into account the **rectification of an obvious mistake** authorized by or notified to this Authority under Rule 91 (Rule 70.2(e)).

* *If item 4 applies, some or all of those sheets may be marked "superseded."*

INTERNATIONAL PRELIMINARY REPORT ON PATENTABILITY

International application No.
PCT/US09/34519

Box No. V Reasoned statement under Article 35(2) with regard to novelty, inventive step or industrial applicability; citations and explanations supporting such statement

1. Statement

Novelty (N)	Claims 1-25	YES
	Claims NONE	NO
Inventive Step (IS)	Claims 1-25	YES
	Claims NONE	NO
Industrial Applicability (IA)	Claims 1-25	YES
	Claims NONE	NO

2. Citations and Explanations (Rule 70.7)

Claims 1-25 meet the criteria set out in PCT Article 33(2)-(3), because the prior art does not teach or fairly suggest "[a] gaming system" which includes "a display for displaying a wagering game," "a video display device with an image capture device [that is] integral therewith," an image capture device "[is] configured to optically capture objects [that are] proximate [to] the display," "at least one controller" that is operative to "detect the presence of at least a first object proximate the display," and "cause the image capture device to optically capture the first object and create a stored image thereof," and "graphically integrate the stored image of the first object into the wagering game, and display one or more outcomes of the wagering game which include one or more symbols comprising at least a portion of the stored image," as recited in independent claim 1; "[a] method of conducting a wagering game on a gaming system," comprising "detecting at least a first object overlying a first display," wherein the first display includes "a video display device with an image capture device [that is] integral therewith," the image capture device "[is] configured to scan portions of the first object proximate to the first display," and the acts of "optically capturing the first object ... and creating a stored image thereof," and , the method requires "evaluating one or more graphical criteria of the stored image to assess an ability to integrate the first object into the wagering game; creating at least one custom symbol comprising at least a portion of the stored image; and displaying one or more outcomes of the wagering game which include the at least one custom symbol," as recited in independent claim 6; "scanning at least one player identification element via an optical scanner integrated within a video display device of a first display of the gaming system," a recited in independent claim 11; "[a] gaming system that includes"a first display," which is configured "for displaying a wagering game," wherein the first display "includ[es] an integrated optical scanner configured to scan objects proximate an image capture area of the first display," "at least one server storing digital security information thereon," and "a portable digital security device having a second display thereon," [A]t least one controller" is operative to:
generate and display a digital key on the second display, detect the digital security device proximate the first display with the second display positioned within the image capture area; cause the optical scanner to scan the digital key displayed on the second display and create a scanned digital key there from; compare the scanned digital key with the stored digital security information to either authenticate or reject a user of the digital security device; and if the user is authenticated, permit the user to access the gaming system," as recited in independent claim 16; and "[a] method of conducting a wagering game on a gaming system" "upon [] conclusion of a gaming session, printing and providing a ticket to the first player, the ticket including indicia thereon [that is] associated with a credit balance belonging to the first player," "[U]pon commencement of a subsequent gaming session," "detecting the ticket within an image capture area of a first display and scanning the indicia on the ticket via an optical scanner integrated within the first display," After "recalling the credit balance associated with the ticket; [and] detecting receipt of at least a second wager deducted from the credit balance," the method then requires "displaying on the first display one or more plays of a second wagering game," as recited in independent claim 21.

Claims 1-25 meet the criteria set out in PCT Article 33(4), and thus have industrial applicability because the subject matter claimed can be made or used in industry.

REQUIRED DOCUMENT I(B)

The following document(s) include(s) a copy of all claims which were indicated as having novelty, inventive step and industrial applicability in the corresponding PCT application

Claims 1,2,4,6,9,11,16,20 and 21 are amended

CLAIMS:

1. A gaming system comprising:

a wager input device for receiving at least one wager;

a display for displaying a wagering game, the display including a video display device with an image capture device integral therewith, the image capture device being configured to optically capture objects proximate the display; and

at least one controller operative to:

detect the presence of at least a first object proximate the display,

cause the image capture device to optically capture the first object and create a stored image thereof,

graphically integrate the stored image of the first object into the wagering game, and

display one or more outcomes of the wagering game which include one or more symbols comprising at least a portion of the stored image.

2. The gaming system of claim 1, wherein the image capture device optically captures portions of the first object that overly and directly contact the video display device.

3. The gaming system of claim 1, wherein the at least one controller is further operative to detect whether the first object is within a predetermined range of distances from the display.

4. The gaming system of claim 1, wherein the display graphically depicts an image capture area on the video display device.

5. The gaming system of claim 4, wherein the image capture device lies within the image capture area.

6. A method of conducting a wagering game on a gaming system, the method comprising:

receiving a wager;

detecting at least a first object overlying a first display, the first display including a video display device with an image capture device integral therewith, the image capture device being configured to scan portions of the first object proximate to the first display;

optically capturing the first object via the image capture device and creating a stored image thereof;

evaluating one or more graphical criteria of the stored image to assess an ability to integrate the first object into the wagering game;

creating at least one custom symbol comprising at least a portion of the stored image; and

displaying one or more outcomes of the wagering game which include the at least one custom symbol.

7. The method of claim 6, wherein the image capture device comprises an optical scanner.

8. The method of claim 7, wherein the optical scanner comprises a plurality of image sensors positioned and interspersed within a plurality of pixels of the display.

9. The method of claim 6, wherein the display and integrated image capture device comprise a liquid crystal display (LCD) with an array of pixel cells, the array of pixel cells including a first plurality of transistors operable to output images from the LCD, and the array of pixel cells further including a second plurality of transistors collectively configured to capture an image of the portions of the first object proximate the LCD.

10. The method of claim 6, wherein the detecting step includes detecting the first object within an image capture area of the display.

11. A method of conducting a wagering game on a gaming system, the method comprising:

scanning at least one player identification element via an optical scanner integrated within a video display device of a first display of the gaming system, the at least one player identification element associated with at least a first player;

comparing the at least one player identification element with information stored within at least one player profile;

if the at least one player identification element matches information stored within the at least one player profile, authenticating the first player to play a wagering game;

detecting receipt of at least one wager from the first player; and

displaying at least a portion of the wagering game on the first display.

12. The method of claim 11, wherein the display comprises a liquid crystal display having a plurality of pixels.

13. The method of claim 12, wherein the optical scanner comprises a plurality of image sensors positioned and interspersed amongst the plurality of pixels.

14. The method of claim 11, wherein the player identification element comprises a fingerprint.

15. The method of claim 14, wherein the fingerprint is scanned contemporaneously with the first player touching the display to provide a wagering game input.

16. A gaming system comprising:

a wager input device for receiving at least one wager;

a first display for displaying a wagering game, the first display including an integrated optical scanner configured to scan objects proximate an image capture area of the first display;

at least one server storing digital security information thereon;

a portable digital security device having a second display thereon; and

at least one controller operative to:

generate and display a digital key on the second display,

detect the digital security device proximate the first display with the second display positioned within the image capture area;

cause the optical scanner to scan the digital key displayed on the second display and create a scanned digital key there from;

compare the scanned digital key with the stored digital security information to either authenticate or reject a user of the digital security device; and

if the user is authenticated, permit the user to access the gaming system.

17. The gaming system of claim 16, wherein the digital key comprises alphanumeric information.

18. The gaming system of claim 16, wherein the digital key comprises graphics.

19. The gaming system of claim 18, wherein the digital key comprises a series of digital images.

20. The gaming system of claim 16, wherein the at least one controller is further operative to determine a role for the user and provide access to the system to the user commensurate with the role.

21. A method of conducting a wagering game on a gaming system, the method comprising:

detecting receipt of at least a first wager from a first player;

in response thereto, displaying on at least one display one or more plays of a first wagering game;

upon the conclusion of a gaming session, printing and providing a ticket to the first player, the ticket including indicia thereon associated with a credit balance belonging to the first player;

upon commencement of a subsequent gaming session, detecting the ticket within an image capture area of a first display and scanning the indicia on the ticket via an optical scanner integrated within the first display;

recalling the credit balance associated with the ticket;

detecting receipt of at least a second wager deducted from the credit balance; and

displaying on the first display one or more plays of a second wagering game.

22. The method of claim 21, wherein the display comprises a liquid crystal display having a plurality of pixels.

23. The method of claim 22, wherein the optical scanner comprises a plurality of image sensors positioned and interspersed amongst the plurality of pixels.

24. The method of claim 21, wherein the indicia comprises a bar code.

25. The method of claim 21, further comprising deactivating the ticket.

UNITED STATES PATENT AND TRADEMARK OFFICE

UNITED STATES DEPARTMENT OF COMMERCE
United States Patent and Trademark Office
Address: COMMISSIONER FOR PATENTS
P.O. Box 1450
Alexandria, Virginia 22313-1450
www.uspto.gov

APPLICATION NO.	FILING DATE	FIRST NAMED INVENTOR	ATTORNEY DOCKET NO.	CONFIRMATION NO.
12/866,186	09/30/2010	Jacek Grabiec	247079-000750USPX	9673

70243 7590 07/15/2011
NIXON PEABODY LLP
300 S. Riverside Plaza
16th Floor
CHICAGO, IL 60606

EXAMINER
VO, PETER DUNG BA

ART UNIT	PAPER NUMBER
3718	

MAIL DATE	DELIVERY MODE
07/15/2011	PAPER

Please find below and/or attached an Office communication concerning this application or proceeding.

The time period for reply, if any, is set in the attached communication.

UNITED STATES PATENT AND TRADEMARK OFFICE

Commissioner for Patents
United States Patent and Trademark Office
P.O. Box 1450
Alexandria, VA 22313-1450
www.uspto.gov

NIXON PEABODY LLP
300 S. Riverside Plaza
16th Floor
CHICAGO IL 60606

In re Application of: GRABIEC, JACEK Serial No.: 12/866186 Filed: August 4, 2010 Attorney Docket No. : 247079-000750USPX Title: GAMING SYSTEM HAVING DISPLAYS WITH INTEGRATED IMAGE CAPTURE CAPABLITIES	DECISION ON A REQUEST TO PARTICIPATE IN PCT/PATENT PROSECUTION HIGHWAY PROGRAM AND PETITION TO MAKE SPECIAL UNDER CFR 1.102(a)

This is a decision on the request to participate in the Patent Prosecution Highway (PPH) program and the petition under 37 CFR 1.102(a), filed July 11, 2011 to make the above-identified application special.

The request and petition are **granted.**

A grantable request to participate in the PPH pilot program and petition to make special require:

(1) The U.S. application must validly claim priority under 35 U.S.C. 119(a) to one or more PCT applications filed in the JPO, EPO, KIPO, or USPTO;
(2) Applicant must submit a copy of the allowable/patentable claim(s) from the PCT application(s) latest international work product (the written opinion or the IPER) along with an English translation thereof and a statement that the English translation is accurate;
(3) All the claims in the U.S. application must sufficiently correspond or be amended to sufficiently correspond to the allowable/patentable claim(s) in the PCT application(s);
(4) Examination of the U.S. application has not begun;
(5) Applicant must submit a copy of the latest international work product from the PCT application containing the allowable/patentable claim(s) along with an English translation thereof and a statement that the English translation is accurate; and
(6) Applicant must submit an IDS listing the documents cited by the PCT examiner in the international work product along with copies of documents except U.S. patents or U.S. patent application publications.

In light of the petition being properly submitted, the request to participate in the PPH program and the petition comply with the above requirements. Accordingly, the above-identified application has been accorded "special" status.

The applicant is encouraged to cite and submit all relevant prior art references, if any, to facilitate examination in this application.

Response must be filed via EFS-Web. Telephone inquiries concerning this decision should be directed to Henry C. Yuen, at 571-272-4856.

Petition is **granted**.

/Henry C. Yuen/

Henry C. Yuen
Special Programs Examiner
Technology Center 3700
Tel: 571-272-4856

UNITED STATES PATENT AND TRADEMARK OFFICE

UNITED STATES DEPARTMENT OF COMMERCE
United States Patent and Trademark Office
Address: COMMISSIONER FOR PATENTS
P.O. Box 1450
Alexandria, Virginia 22313-1450
www.uspto.gov

APPLICATION NO.	FILING DATE	FIRST NAMED INVENTOR	ATTORNEY DOCKET NO.	CONFIRMATION NO.
12/866,195	08/04/2010	Takao Yazaki	362627US8PCT TK	9727

22850 7590 01/05/2011
OBLON, SPIVAK, MCCLELLAND MAIER & NEUSTADT, L.L.P.
1940 DUKE STREET
ALEXANDRIA, VA 22314

EXAMINER
HUG, ERIC J

ART UNIT	PAPER NUMBER
1741	

NOTIFICATION DATE	DELIVERY MODE
01/05/2011	ELECTRONIC

Please find below and/or attached an Office communication concerning this application or proceeding.

The time period for reply, if any, is set in the attached communication.

Notice of the Office communication was sent electronically on above-indicated "Notification Date" to the following e-mail address(es):

patentdocket@oblon.com
oblonpat@oblon.com
jgardner@oblon.com

UNITED STATES PATENT AND TRADEMARK OFFICE

Commissioner for Patents
United States Patent and Trademark Office
P.O. Box 1450
Alexandria, VA 22313-1450
www.uspto.gov

January 4, 2011
BC

In re application of	:	DECISION ON REQUEST TO
Takao Yazaki et al.	:	PARTICIPATE IN PATENT
Serial No. 12/866,195	:	PROSECUTION HIGHWAY
Filed: August 04, 2010	:	PROGRAM AND
For: SHOE PRESS BELT FOR	:	PETITION TO MAKE SPECIAL
PAPERMAKING	:	UNDER 37 CFR 1.102(a)

This is a decision on the request to participate in the Patent Prosecution Highway (PPH) program filed October 13, 2010.

The request and petition are **GRANTED**.

A grantable request to participate in the PPH program and petition to make special require:

(1) The U.S. application must validly claim priority under 35 U.S.C. 119(a) to one or more applications filed in the JPO, note where the JPO application with similar claims is not the same application from which the U.S. application claims priority that the applicant must identify the relationship between the JPO application with similar claims and the JPO priority application;

(2) Applicant must submit a copy of:
   a. The allowable/patentable claim(s) from the JPO application(s) or if a copy of the allowable/patentable claims is available via the Dossier Access System (DAS) applicant may request the USPTO to obtain a copy from DAS; however, if the USPTO is unable to obtain a copy from the DAS, the applicant will be required to submit a copy;
   b. An English translation of the allowable/ patentable claim(s), if applicable; and
   c. A statement that the English translation is accurate, if applicable;

(3) Applicant must:
   a. Ensure all the claims in the U.S. application must sufficiently correspond or be amended to sufficiently correspond to the allowable/patentable claim(s) in the JPO application(s); and
   b. Submit a claims correspondence table in English;

(4) Examination of the U.S. application has not begun;

(5) Applicant must submit:

a. Documentation of prior office action:
   i. a copy of the office action(s) just prior to the "Decision to Grant a Patent" from each of the JPO application(s) containing the allowable/patentable claims(s) or
   ii. if the allowable/patentable claim(s) are from "Notification of Reasons for Refusal" then the Notification of Reasons for Refusal or
   iii. if the JPO application is a first action allowance then no office action from the JPO is necessary should be indicated on the request/petition form;
   Further, if a copy of the documents from a or b is available via the Dossier Access System (DAS), applicant may request the USPO obtain a copy from the DAS; however, if the USPTO is unable to obtain a copy of the DAS, the applicant will be required to submit a copy;
b. An English language translation of the JPO Office action from (5)(a)(i)-(ii) above if applicable; and
c. A statement that the English translation is accurate; and

(6) Applicant must submit:
a. An IDS listing the documents cited by the JPO examiner in the JPO office action (unless already submitted in this application)
b. Copies of documents except U.S. patents or U.S. patent application publications (unless already submitted in this application).

The request to participate in the PPH program and petition comply with the above requirements. Accordingly, the above-identified application has been accorded "special" status.

The application is being forwarded to the examiner for action on the merits commensurate with this decision.

Any inquiry regarding this decision should be directed to Blaine Copenheaver, Quality Assurance Specialist, at (571) 272-1156.

All other inquiries concerning the examination or status of the application is accessible in the PAIR system at http://www.uspto.gov/ebc/index.html.

/Blaine Copenheaver/

Blaine Copenheaver
Quality Assurance Specialist
Technology Center 1700

UNITED STATES PATENT AND TRADEMARK OFFICE

Commissioner for Patents
United States Patent and Trademark Office
P.O. Box 1450
Alexandria, VA 22313-1450
www.uspto.gov

SUGHRUE MION, PLLC
2100 PENNSYLVANIA AVENUE, N.W.
SUITE 800
WASHINGTON, DC 20037

MAILED
NOV 04 2011
OFFICE OF PETITIONS

Applicants: KANO, et al.
Appl. No.: 12/866,196
International Filing Date: February 3, 2009
Title: DLC-COATED SLIDING MEMBER AND METHOD FOR PRODUCING THE SAME
Attorney Docket: Q120011
Pub. No.: US 2011/0044572 A1
Pub. Date: February 24, 2011

This is a decision on the request for a corrected patent application publication under 37 CFR 1.221(b), received on April 8, 2011, for the above-identified application.

The request is dismissed.

Applicant requests that the application be republished because the patent application publication contains an error wherein the second assignee's name is not printed on the first page of the publication.

37 CFR 1.221 (b) is applicable "only when the Office makes a material mistake which is apparent from Office records.... Any request for a corrected publication or revised patent application publication other than provided as provided in paragraph (a) of this section must be filed within two months from the date of the patent application publication. This period is not extendable." A material mistake must affect the public's ability to appreciate the technical disclosure of the patent application publication, to determine the scope of the patent application publication, or to determine the scope of the provisional rights that an applicant may seek to enforce upon issuance of a patent. [1]

The instant request does not identify a material mistake in the publication made by the Office under 37 CFR 1.221(b) with respect to the name of the assignee. Omitting an assignee's name is not a material mistake because it does not affect the public's ability to appreciate the technical disclosure of the patent application publication, to determine the scope of the patent application publication or to determine the scope of the provisional rights that an applicant may seek to enforce upon issuance of a patent. See MPEP 1130. Applicants should not file requests for

[1] Changes to Implement Eighteen-Month Publication of Patent Applications, 65 FR 57023, 57038 (Sept. 20, 2000), 1239, Off. Gaz. Pat. Office Notices 63, 75 (Oct. 10, 2000) (final rule).

corrected publication when a publication includes error in assignment information or missing assignment information.

Applicant is encouraged to use and submit an eADS (PTO/SB/14) as an EFS-Web Fillable Form, rather than a scanned PDF image, to benefit from having the data loaded directly into USPTO electronic systems. For questions, contact the Patent EBC (Electronic Business Center):
Telephone: 1-866-217-9197 (toll-free) or E-mail: ebc@uspto.gov.
571-272-4100 (local)

The applicant is advised that a "request for republication of an application previously published" may be filed under 37 CFR 1.221(a). Such a request for republication "must include a copy of the application compliance with the Office's electronic filing system requirements and be accompanied by the publication fee set forth in § 1.18(d) and the processing fee set forth in § 1.17(i)." If the request for republication does not comply with the electronic filing system requirements, the republication will not take place and the publication fee set forth in § 1.18(d) will be refunded. The processing fee will be retained.

A guide for filing a request for a Pre-Grant Publication, such as a request for republication, may be found on the link below:

http://www.uspto.gov/patents/process/file/efs/guidance/index.jsp

http://www.uspto.gov/ebc/portal/efs/pgpub_quickstart.pdf

Any request for republication under 37 CFR 1.221(a), must be submitted via the EFS system, as a "Pre-Grant Publication".

Inquiries relating to this matter may be directed to Sherry D. Brinkley at (571) 272-3204.

/Christopher Bottorff/

Christopher Bottorff
Petitions Examiner
Office of Petitions

UNITED STATES PATENT AND TRADEMARK OFFICE

UNITED STATES DEPARTMENT OF COMMERCE
United States Patent and Trademark Office
Address: COMMISSIONER FOR PATENTS
P.O. Box 1450
Alexandria, Virginia 22313-1450
www.uspto.gov

APPLICATION NO.	FILING DATE	FIRST NAMED INVENTOR	ATTORNEY DOCKET NO.	CONFIRMATION NO.
12/866,201	08/04/2010	Sang-Choll Han	29137.625.00	9770

30827 7590 01/12/2011
MCKENNA LONG & ALDRIDGE LLP
1900 K STREET, NW
WASHINGTON, DC 20006

EXAMINER
BEN, LOHA

ART UNIT	PAPER NUMBER
2873	

MAIL DATE	DELIVERY MODE
01/12/2011	PAPER

Please find below and/or attached an Office communication concerning this application or proceeding.

The time period for reply, if any, is set in the attached communication.

UNITED STATES PATENT AND TRADEMARK OFFICE

Commissioner for Patents
United States Patent and Trademark Office
P.O. Box 1450
Alexandria, VA 22313-1450
www.uspto.gov

MCKENNA LONG & ALDRIDGE LLP
1900 K STREET, NW
WASHINGTON DC 20006

In re Application of	
Han et al.	**: DECISION ON REQUEST TO**
Application No.: 12/866,201	**: PARTICIPATE IN THE PATENT**
Filed: 04 August 2010	**: PROSECUTION HIGHWAY**
Attorney Docket No.: N/A 29137.625.00	**: PROGRAM AND PETITION**
For: OPTICAL FILM AND	**: TO MAKE SPECIAL UNDER**
MANUFACTURING PROCESS	**: 37 CFR 1.102(a)**
THEREOF	

This is a decision on the request to participate in the Patent Prosecution Highway (PPH) program and the petition under 37 CFR 1.102(a), filed 02 December 2010, to make the above-identified application special.

The request and petition are **DISMISSED**.

Discussion

A grantable request to participate in the PPH program and petition to make special require:

1. The U.S. application is

    a. a Paris Convention application which either
        i. validly claims priority under 35 U.S.C. 119(a) and 37 CFR 1.55 to one or more applications filed in the KIPO, or
        ii. validly claims priority under 35 U.S.C. 119(a)/365(a) to a PCT application that contains no priority claims,

    or

    b. a national stage application under the PCT (an application which entered the national stage in the U.S. from a PCT international application after compliance with 35 U.S.C. 371), which PCT application
        i. validly claims priority under 35 U.S.C. 365(b) to an application filed in the KIPO, or
        ii. validly claims priority under 35 U.S.C. 365(b) to a PCT application that contains no priority claims, or
        iii. contains no priority claim,

    or

c. a so-called bypass application filed under 35 U.S.C. 111(a) which validly claims benefit under 35 U.S.C. 120 to a PCT application, which PCT application
    i. validly claims priority under 35 U.S.C. 365(b) to an application filed in the KIPO, or
    ii. validly claims priority under 35 U.S.C. 365(b) to a PCT application that contains no priority claims, or
    iii. contains no priority claim;

2. Applicant must submit a copy of:
    a. The allowable/patentable claim(s) from the KR application(s);
    b. An English translation of the allowable/patentable claim(s), and
    c. A statement that the English translation is accurate (if the claims were published in a language other than English);
3. Applicant must:
    a. Ensure that all the claims in the U.S. application must sufficiently correspond or be amended to sufficiently correspond to the allowable/patentable claim(s) in the KR application(s), and
    b. Submit a claims correspondence table in English;
4. Examination of the U.S. application has not begun;
5. Applicant must submit:
    a. A copy of all the office actions (which are relevant to patentability), excluding "Decision to Grant a Patent" from each of the KR application(s) containing the allowable/patentable claim(s);
    b. An English language translation of the KIPO office action; and
    c. A statement that the English translation is accurate (if the office actions are not in the English language);
6. Applicant must submit:
    a. An IDS listing the documents cited by the KIPO examiner in the KIPO office action (unless already filed in this application); and
    b. Copies of all the documents cited in the KIPO office action, except U.S. patents or U.S. patent application publications (unless already filed in this application);

This request to participate in the PPH program and petition is assessed as follows:

Requirements 1, 2, and 4-6 above are considered to have been met.
However the request to participate in the PPH program fails to meet requirement 3.

Regarding requirement 3, Applicant as failed to ensure that all the claims in the U.S. application sufficiently correspond to the allowable/patentable claims in the KR application. For example only, claim 1 of the KIPO application requires "a plurality of protrusions formed on crest regions of the plurality of lens structures" while claim 1 of the instant application requires "a plurality of protrusions formed on at least one of the light-incident portion and the light exit portion." These limitations do not sufficiently correspond.

Applicant is given **ONE** opportunity within a time period of **ONE MONTH or THIRTY DAYS**, whichever is longer, from the mailing date of this decision to correct the deficiencies. **NO EXTENSION OF TIME UNDER 37 CFR 1.136 IS PERMITTED.** If the deficiencies are not corrected with the time period given, the application will await action in its regular turn.

Response must be filed via the Electronic Filing System (EFS) with the Document Code PPH.PET.652. Any preliminary amendments and IDS submitted with the PPH documents must be separately indexed as a preliminary amendment and IDS, respectively.

Telephone inquiries concerning this decision should be directed to Lee W. Young at (571) 272-4549.

All other inquiries concerning the examination or status of the application is accessible in the PAIR system at http://www.uspto.gov/ebc.index.html.

Lee W. Young
TQAS
Technology Center 2800 – Semiconductors
Electrical & Optical Systems & Components

UNITED STATES PATENT AND TRADEMARK OFFICE

UNITED STATES DEPARTMENT OF COMMERCE
United States Patent and Trademark Office
Address: COMMISSIONER FOR PATENTS
P.O. Box 1450
Alexandria, Virginia 22313-1450
www.uspto.gov

APPLICATION NO.	FILING DATE	FIRST NAMED INVENTOR	ATTORNEY DOCKET NO.	CONFIRMATION NO.
12/866,201	08/04/2010	Sang-Choll Han	29137.625.00	9770

30827 7590 02/02/2011
MCKENNA LONG & ALDRIDGE LLP
1900 K STREET, NW
WASHINGTON, DC 20006

EXAMINER
BEN, LOHA

ART UNIT	PAPER NUMBER
2873	

MAIL DATE	DELIVERY MODE
02/02/2011	PAPER

Please find below and/or attached an Office communication concerning this application or proceeding.

The time period for reply, if any, is set in the attached communication.

UNITED STATES PATENT AND TRADEMARK OFFICE

Commissioner for Patents
United States Patent and Trademark Office
P.O. Box 1450
Alexandria, VA 22313-1450
www.uspto.gov

MCKENNA LONG & ALDRIDGE LLP
1900 K STREET, NW
WASHINGTON DC 20006

In re Application of	
Han et al.	**: DECISION ON REQUEST TO**
Application No.: 12/866,201	**: PARTICIPATE IN THE PATENT**
Filed: 04 August 2010	**: PROSECUTION HIGHWAY**
Attorney Docket No.: N/A 29137.625.00	**: PROGRAM AND PETITION**
For: OPTICAL FILM AND	**: TO MAKE SPECIAL UNDER**
MANUFACTURING PROCESS	**: 37 CFR 1.102(a)**
THEREOF	

This is a decision on the request to participate in the Patent Prosecution Highway (PPH) program and the petition under 37 CFR 1.102(a), filed 02 December 2010 and renewed on 24 January 2011, to make the above-identified application special.

The request and petition are **GRANTED**.

Discussion

A grantable request to participate in the PPH program and petition to make special require:

1. The U.S. application is

    a. a Paris Convention application which either
        i. validly claims priority under 35 U.S.C. 119(a) and 37 CFR 1.55 to one or more applications filed in the KIPO, or
        ii. validly claims priority under 35 U.S.C. 119(a)/365(a) to a PCT application that contains no priority claims,

    or

    b. a national stage application under the PCT (an application which entered the national stage in the U.S. from a PCT international application after compliance with 35 U.S.C. 371), which PCT application
        i. validly claims priority under 35 U.S.C. 365(b) to an application filed in the KIPO, or
        ii. validly claims priority under 35 U.S.C. 365(b) to a PCT application that contains no priority claims, or
        iii. contains no priority claim,

    or

    c. a so-called bypass application filed under 35 U.S.C. 111(a) which validly claims benefit under 35 U.S.C. 120 to a PCT application, which PCT application

i. validly claims priority under 35 U.S.C. 365(b) to an application filed in the KIPO, or
ii. validly claims priority under 35 U.S.C. 365(b) to a PCT application that contains no priority claims, or
iii. contains no priority claim;

2. Applicant must submit a copy of:
   a. The allowable/patentable claim(s) from the KR application(s);
   b. An English translation of the allowable/patentable claim(s), and
   c. A statement that the English translation is accurate (if the claims were published in a language other than English);
3. Applicant must:
   a. Ensure that all the claims in the U.S. application must sufficiently correspond or be amended to sufficiently correspond to the allowable/patentable claim(s) in the KR application(s), and
   b. Submit a claims correspondence table in English;
4. Examination of the U.S. application has not begun;
5. Applicant must submit:
   a. A copy of all the office actions (which are relevant to patentability), excluding "Decision to Grant a Patent" from each of the KR application(s) containing the allowable/patentable claim(s);
   b. An English language translation of the KIPO office action; and
   c. A statement that the English translation is accurate (if the office actions are not in the English language);
6. Applicant must submit:
   a. An IDS listing the documents cited by the KIPO examiner in the KIPO office action (unless already filed in this application); and
   b. Copies of all the documents cited in the KIPO office action, except U.S. patents or U.S. patent application publications (unless already filed in this application);

The request to participate in the PPH program and petition comply with the above requirements. Accordingly, the above-identified application has been accorded "special" status.

Any response must be submitted via EFS-Web.

Telephone inquiries concerning this decision should be directed to Lee W. Young at 571-272-4549.

All other inquiries concerning the examination or status of the application is accessible in the PAIR system at http://uspto.gov/ebc/index.html.

Lee W. Young
TQAS
Technology Center 2800

UNITED STATES PATENT AND TRADEMARK OFFICE

Commissioner for Patents
United States Patent and Trademark Office
P.O. Box 1450
Alexandria, VA 22313-1450
www.uspto.gov

BIRCH STEWART KOLASCH & BIRCH
PO BOX 747
FALLS CHURCH VA 22040-0747

MAILED
JUN 21 2011
OFFICE OF PETITIONS

In re Application of	:	
Bo Widen	:	
Application No. 12/866,204	:	DECISION ON PETITION
Filed: August 4, 2010	:	TO MAKE SPECIAL UNDER
Attorney Docket No. 0226-0132PUS1	:	37 CFR 1.102(c)(1)
	:	

This is a decision on the petition under 37 CFR 1.102(c)(1), filed April 6, 2011, to make the above-identified application special based on applicant's age as set forth in M.P.E.P. § 708.02, Section IV.

The petition is **GRANTED.**

A grantable petition to make an application special under 37 CFR 1.102(c)(1) and MPEP § 708.02, Section IV: Applicant's Age must be accompanied by evidence showing that at least one of the applicants is 65 years of age, or more, such as a birth certificate or a statement by applicant. No fee is required

The instant petition includes a copy of the applicant's passport proving that he is 65 years of age or older. Accordingly, the above-identified application has been accorded "special" status.

Telephone inquiries concerning this decision should be directed to Terri Johnson at 571-272-2991.

All other inquiries concerning either the examination or status of the application should be directed to the Technology Center.

The application is being forwarded to the Technology Center Art Unit 3673 for action on the merits commensurate with this decision.

/Terri Johnson/
Terri Johnson
Petitions Examiner
Office of Petitions

UNITED STATES PATENT AND TRADEMARK OFFICE

UNITED STATES DEPARTMENT OF COMMERCE
United States Patent and Trademark Office
Address: COMMISSIONER FOR PATENTS
P.O. Box 1450
Alexandria, Virginia 22313-1450
www.uspto.gov

APPLICATION NO.	FILING DATE	FIRST NAMED INVENTOR	ATTORNEY DOCKET NO.	CONFIRMATION NO.
12/866,212	09/29/2010	Yoshihisa Kishiyama	17401/294001	9850

22511 7590 04/06/2011
OSHA LIANG L.L.P.
TWO HOUSTON CENTER
909 FANNIN, SUITE 3500
HOUSTON, TX 77010

EXAMINER
GHAYOUR, MOHAMMAD H

ART UNIT	PAPER NUMBER
2611	

NOTIFICATION DATE	DELIVERY MODE
04/06/2011	ELECTRONIC

Please find below and/or attached an Office communication concerning this application or proceeding.

The time period for reply, if any, is set in the attached communication.

Notice of the Office communication was sent electronically on above-indicated "Notification Date" to the following e-mail address(es):

docketing@oshaliang.com
buta@oshaliang.com
hathaway@oshaliang.com

UNITED STATES PATENT AND TRADEMARK OFFICE

Commissioner for Patents
United States Patent and Trademark Office
P.O. Box 1450
Alexandria, VA 22313-1450
www.uspto.gov

OSHA LIANG L.L.P.
TWO HOUSTON CENTER
909 FANNIN, SUITE 3500
HOUSTON TX 77010

In re Application of	:	
KISHIYAMA, YOSHIHISA, et al.	:	DECISION ON REQUEST TO
Application No. 12/866,212	:	PARTICIPATE IN PATENT
Filed: September 29, 2010	:	PROSECUTION HIGHWAY
Attorney Docket No. **17401/294001**	:	PROGRAM AND PETITION
	:	TO MAKE SPECIAL UNDER
	:	37 CFR 1.102(a)

This is a decision on the request to participate in the Patent Prosecution Highway (PPH) program and the petition under 37 CFR 1.102(a), filed August 6, 2010 to make the above-identified application special.

The request and petition are **GRANTED**.

A grantable request to participate in the PPH program and petition to make special require:

(1) The U.S. application must validly claim priority under 35 U.S.C. 119(a) to one or more applications filed in the JPO;
(2) Applicant must submit a copy of the allowable/patentable claim(s) from the JPO application(s) along with an English translation thereof and a statement that the English translation is accurate;
(3) All the claims in the U.S. application must sufficiently correspond or be amended to sufficiently correspond to the allowable/patentable claim(s) in the JPO application(s);
(4) Examination of the U.S. application has not begun;
(5) Applicant must submit a copy of all the office actions from each of the JPO application(s) containing the allowable/patentable claim(s) along with an English translation thereof and a statement that the English translation is accurate; and
(6) Applicant must submit an IDS listing the documents cited by the JPO examiner in the JPO office action along with copies of documents except U.S. patents or U.S. patent application publications.

The request to participate in the PPH program and petition comply with the above requirements. Accordingly, the above-identified application has been accorded "special" status.

Telephone inquiries concerning this decision should be directed to Kenneth Wieder at 571-272-2986.

All other inquiries concerning the examination or status of the application should be directed to Patent Application Information Retrieval (PAIR) system.

The application is being forwarded to the examiner for action on the merits commensurate with this decision.

/Kenneth A. Wieder/

Kenneth Wieder
Quality Assurance Specialist
Technology Center 2600
Communications

UNITED STATES PATENT AND TRADEMARK OFFICE

UNITED STATES DEPARTMENT OF COMMERCE
United States Patent and Trademark Office
Address: COMMISSIONER FOR PATENTS
P.O. Box 1450
Alexandria, Virginia 22313-1450
www.uspto.gov

APPLICATION NO.	FILING DATE	FIRST NAMED INVENTOR	ATTORNEY DOCKET NO.	CONFIRMATION NO.
12/866,226	08/04/2010	Akio Kuramoto	J-10-0343	9924

71799 7590 01/05/2011
Mr. Jackson Chen
6535 N. STATE HWY 161
IRVING, TX 75039

EXAMINER
OWENS, DOUGLAS W

ART UNIT	PAPER NUMBER
2821	

NOTIFICATION DATE	DELIVERY MODE
01/05/2011	ELECTRONIC

Please find below and/or attached an Office communication concerning this application or proceeding.

The time period for reply, if any, is set in the attached communication.

Notice of the Office communication was sent electronically on above-indicated "Notification Date" to the following e-mail address(es):

jackson.chen@necam.com
KENSAKU.SATO@NECAM.COM

UNITED STATES PATENT AND TRADEMARK OFFICE

Commissioner for Patents
United States Patent and Trademark Office
P.O. Box 1450
Alexandria, VA 22313-1450
www.uspto.gov

Mr. Jackson Chen
6535 N. STATE HWY 161
IRVING TX 75039

In re Application of	
Akio KURAMOTO	**: DECISION ON REQUEST TO**
Application No.: 12/866,226	**: PARTICIPATE IN THE PATENT**
Filed: 04 August 2010	**: PROSECUTION HIGHWAY**
Attorney Docket No.: J-10-0343	**: PROGRAM AND PETITION**
For: WIDEBAND ANTENNA AND	**: TO MAKE SPECIAL UNDER**
CLOTHING AND ARTICLES USING	**: 37 CFR 1.102(d)**
THE SAME	

This is a decision on the request to participate in the Patent Prosecution Highway (PPH) program and the petition under 37 CFR 1.102(a), filed 02 December 2010, to make the above-identified application special.

The request and petition are **GRANTED**.

Discussion

A grantable request to participate in the PPH pilot program and petition to make special require:

1. The U.S. application is

    a. a Paris Convention application which either
        i. validly claims priority under 35 U.S.C. 119(a) and 37 CFR 1.55 to one or more applications filed in the JPO, or
        ii. validly claims priority to a PCT application that contains no priority claims, or
    b. a national stage application under the PCT (an application which entered the national stage in the U.S. from a PCT international application after compliance with 35 U.S.C. 371), which PCT application
        i. validly claims priority to an application filed in the JPO, or
        ii. validly claims priority to a PCT application that contains no priority claims, or
        iii. contains no priority claim, or
    c. a so-called bypass application filed under 35 U.S.C. 111(a) which validly claims benefit under 35 U.S.C. 120 to a PCT application, which PCT application
        i. validly claims priority to an application filed in the JPO, or
        ii. validly claims priority to a PCT application that contains no priority claims, or

iii. contains no priority claim;

2. Applicant must submit a copy of:
   a. The allowable/patentable claim(s) from the JPO application(s);
   b. An English translation of the allowable/patentable claim(s) and
   c. A statement that the English translation is accurate;
3. Applicant must:
   a. Ensure all the claims in the U.S. application must sufficiently correspond or be amended to sufficiently correspond to the allowable/patentable claim(s) in the JPO application(s) and
   b. Submit a claims correspondence table in English;
4. Examination of the U.S. application has <u>not</u> begun;
5. Applicant must submit:
   a. Documentation of prior office action:
      i. a copy of the office action(s) just prior to the "Decision to Grant a Patent" from each of the JPO application(s) containing the allowable/patentable claim(s) or
      ii. if the allowable/patentable claims(s) are from a "Notification of Reasons for Refusal" then the Notification of Reasons for Refusal or
      iii. if the JPO application is a first action allowance then no office action from the JPO is necessary should be indicated on the request/petition form;
   b. An English language translation of the JPO Office action from (5)(a)(i)-(ii) above
   c. A statement that the English translation is accurate;
6. Applicant must submit:
   a. An IDS listing the documents cited by the JPO examiner in the JPO office action (unless already submitted in this application)
   b. Copies of the documents except U.S. patents or U.S. patent application publications (unless already submitted in this application);

The request to participate in the PPH pilot program and petition comply with the above requirements. Accordingly, the above-identified application has been accorded "special" status.

Inquiries concerning this decision should be directed to Lee W. Young at 571-272-4549.

All other inquiries concerning the examination or status of the application is accessible in the PAIR system at http://www.uspto.gov/ebc.index.html.

This application will be forwarded to the examiner for action on the merits commensurate with this decision once this application's formality reviews have been completed.

Lee W. Young
TQAS, Technology Center 2800 – Semiconductors
Electrical & Optical Systems & Components

UNITED STATES PATENT AND TRADEMARK OFFICE

UNITED STATES DEPARTMENT OF COMMERCE
United States Patent and Trademark Office
Address: COMMISSIONER FOR PATENTS
P.O. Box 1450
Alexandria, Virginia 22313-1450
www.uspto.gov

APPLICATION NO.	FILING DATE	FIRST NAMED INVENTOR	ATTORNEY DOCKET NO.	CONFIRMATION NO.
12/866,235	08/04/2010	Dae-Joong Kim	TD.2399	1128

24943 7590 08/09/2011
INTELLECTUAL PROPERTY LAW GROUP LLP
12 SOUTH FIRST STREET
SUITE 1205
SAN JOSE, CA 95113

EXAMINER
COBURN, LESLIE

ART UNIT	PAPER NUMBER
3774	

NOTIFICATION DATE	DELIVERY MODE
08/09/2011	ELECTRONIC

Please find below and/or attached an Office communication concerning this application or proceeding.

The time period for reply, if any, is set in the attached communication.

Notice of the Office communication was sent electronically on above-indicated "Notification Date" to the following e-mail address(es):

pt_docket@iplg.com

UNITED STATES PATENT AND TRADEMARK OFFICE

Commissioner for Patents
United States Patent and Trademark Office
P.O. Box 1450
Alexandria, VA 22313-1450
www.uspto.gov

INTELLECTUAL PROPERTY LAW GROUP LLP
12 SOUTH FIRST STREET
SUITE 1205
SAN JOSE CA 95113

In re Application of: KIM, DAE-JOONG et al Serial No.: 12/866,235 Filed: 08/04/2010 Attorney Docket No. : TD.2399 Title: BIOACTIVE MATERIAL COATING METHOD AND TUBE	DECISION ON A REQUEST TO PARTICIPATE IN PATENT PCT/PROSECUTION HIGHWAY PROGRAM AND PETITION TO MAKE SPECIAL UNDER CFR 1.102(a)

This is a decision on the request to participate in the Patent Prosecution Highway (PPH) program and the petition under 37 CFR 1.102(a), filed Aug. 6, 2011 to make the above-identified application special.

The request and petition are granted.

A grantable request to participate in the PPH pilot program and petition to make special require:

(1) The U.S. application must validly claim priority under 35 U.S.C. 119(a) to one or more applications filed in the KIPO;
(2) Applicant must submit a copy of the allowable/patentable claim(s) from the KIPO application(s);
(3) All the claims in the U.S. application must sufficiently correspond or be amended to sufficiently correspond to the allowable/patentable claim(s) in the KIPO application(s);
(4) Examination of the U.S. application has not begun;
(5) Applicant must submit a copy of all the office actions from each of the KIPO application(s) containing the allowable/patentable claim(s) along with an English translation thereof and a statement that the English translation is accurate; and
(6) Applicant must submit an IDS listing the documents cited by the KIPO examiner in the KIPO office action along with copies of documents except U.S. patents or U.S. patent application publications.

In light of the petition being properly submitted, the request to participate in the PPH program and the petition comply with the above requirements. Accordingly, the above-identified application has been accorded "special" status.

The applicant is encouraged to cite and submit all relevant prior art references, if any, to facilitate examination in this application.

Other inquiries concerning the examination or status of the application should be directed to David Isabella, the SPE of Art Unit 3774 at 571-272-4749 for Class 623/001 and also accessible in the PAIR system at http://www.uspto.gov/ebc.index.html.

All other inquiries concerning the examination or status of the application should be directed to the Patent Application Information Retrieval (PAIR) system.

This application will be forwarded and docketed to an examiner for action on the merits commensurate with this decision. Telephone inquiries concerning this decision should be directed to Henry C. Yuen, at 571-272-4856.

The petition is **granted.**

/Henry C. Yuen/

Henry C. Yuen, Special Programs Examiner
Technology Center 3700 – Mechanical Engineering,
Manufacturing and Products
571-272-4856

UNITED STATES PATENT AND TRADEMARK OFFICE

Commissioner for Patents
United States Patent and Trademark Office
P.O. Box 1450
Alexandria, VA 22313-1450
www.uspto.gov

Meredith & Keyhani, PLLC
330 Madison Ave.
6th Floor
New York NY 10017

MAILED
MAR 23 2011
PCT LEGAL ADMINISTRATION

In re Application of: TAYLOR, David Brian :
U.S. App. No. 12/866,292 :
PCT No.:PCT/GB2009/000258 : DECISION ON PETITION
Int. Filing Date: 30 January 2009 : UNDER 37 CFR 1.137(b)
Priority Date: 01 February 2008 :
Attorney Docket: 2914/PCT/US :
For: PAINT APPLICATOR CLEANING :
DEVICE :

This decision is issued in response to the petition under 37 CFR 1.137(b) filed 05 August 2010 to revive the above-entitled application.[1] The petition under 37 CFR 1.137(b) is **GRANTED.**

Applicant's statement that "the entire delay in filing the required reply from the due date for the reply until the filing of a grantable petition under 37 CFR 1.137(b) was unintentional" meets the requirements of 37 CFR 1.137(b)(3).

A review of the application file reveals that applicant has submitted the required reply (basic national fee) and the requirements of 37 CFR 1.137(b) have been satisfied. Therefore, the request to revive the application abandoned under 35 U.S.C. 371(d) is granted as to the National stage in the United States of America.

This application is being returned to the United States Designated/Elected Office for processing in accordance with this decision.

Anthony Smith
Attorney-Advisor
Office PCT Legal Administration
Tel.: 571-272-3298

[1]It is noted that counsel submitted an additional "Petition for Revival of an International Application for Patent Designating the U.S. Abandoned Unintentionally under 37 CFR 1.137(b)" which identified international application number PCT/GB2007/003458. Since the above-identified application is the U.S. national stage of PCT/GB2009/000258, the petition (which identified PCT/GB2007/003458) will not be considered. If this is a misinterpretation of the facts, applicant is required to promptly notify the Office of such and submit a statement of clarification regarding counsel's error.

UNITED STATES PATENT AND TRADEMARK OFFICE

UNITED STATES DEPARTMENT OF COMMERCE
United States Patent and Trademark Office
Address: COMMISSIONER FOR PATENTS
P.O. Box 1450
Alexandria, Virginia 22313-1450
www.uspto.gov

APPLICATION NO.	FILING DATE	FIRST NAMED INVENTOR	ATTORNEY DOCKET NO.	CONFIRMATION NO.
12/866,321	08/05/2010	Francis Anthony Darmann	40121/01701	1718

30636 7590 11/24/2010
FAY KAPLUN & MARCIN, LLP
150 BROADWAY, SUITE 702
NEW YORK, NY 10038

EXAMINER

ART UNIT	PAPER NUMBER
2836	

MAIL DATE	DELIVERY MODE
11/24/2010	PAPER

Please find below and/or attached an Office communication concerning this application or proceeding.

The time period for reply, if any, is set in the attached communication.

UNITED STATES PATENT AND TRADEMARK OFFICE

Commissioner for Patents
United States Patent and Trademark Office
P.O. Box 1450
Alexandria, VA 22313-1450
www.uspto.gov

FAY KAPLUN & MARCIN, LLP
150 BROADWAY, SUITE 702
NEW YORK NY 10038

In re application of	:	DECISION ON REQUEST TO
Francis Anthony DARMANN	:	PARTICIPATE IN PATENT
Serial No. 12/866,321	:	PROSECUTION HIGHWAY
Filed: August 05, 2010	:	PROGRAM AND
For: FAULT CURRENT LIMITER	:	UNDER 37 CFR 1.102(a)

This is a decision on the request to participate in the Patent Prosecution Highway (PPH) program filed August 5, 2010.

The request and petition are **DISMISSED**.

A grantable request to participate in the PPH program and petition to make special require:

(1) The U.S. application must validly claim priority under 35 U.S.C. 119(a) to one or more applications filed in the IPAU;

(2) Applicant must submit a copy of the allowable/patentable claim(s) from the IPAU application(s);

(3) All of the claims in the U.S. application must sufficiently correspond or be amended to sufficiently correspond to the allowable/patentable claim(s) in the IPAU application(s); and

(4) Examination of the U.S. application has not begun;

(5) Applicant must submit a copy of all of the Office actions from each of the IPAU application(s);

(6) Applicant must submit:
   a. An IDS listing the documents cited by the IPAU examiner in the IPAU Office action(s) (unless already submitted in this application)
   b. Copies of documents except U.S. patents or U.S. patent application publications (unless already submitted in this application); and

Conditions (1) through (5) above are considered to have been met. However, the request to participate in the PPH pilot program and petition fails meet condition (6).

Regarding the requirement of condition (6), applicant has failed to provide copies of the WO documents cited in the IPAU Office action and copies of the documents.

Applicant is given **ONE** opportunity within a time period of **ONE MONTH or THIRTY DAYS**, whichever is longer, from the mailing date of this decision to correct the deficiencies. **NO EXTENSION OF TIME UNDER 37 CFR 1.136 IS PERMITTED.** If the deficiencies are not corrected with the time period given, the application will await action in its regular turn.

Response must be filed via the Electronic Filing System (EFS) with the Document Code PPH.PET.652. Any preliminary amendments and IDS submitted with the PPH documents must be separately indexed as a preliminary amendment and IDS, respectively.

Telephone inquiries concerning this decision should be directed to Lee W. Young at 571-272-4549.

All other inquiries concerning the examination or status of the application is accessible in the PAIR system at http://www.uspto.gov/ebc/index.html.

Lee W. Young
TQAS Technology Center 2800 - Semiconductors,
Electrical & Optical Systems & Components

UNITED STATES PATENT AND TRADEMARK OFFICE

UNITED STATES DEPARTMENT OF COMMERCE
United States Patent and Trademark Office
Address: COMMISSIONER FOR PATENTS
P.O. Box 1450
Alexandria, Virginia 22313-1450
www.uspto.gov

APPLICATION NO.	FILING DATE	FIRST NAMED INVENTOR	ATTORNEY DOCKET NO.	CONFIRMATION NO.
12/866,321	08/05/2010	Francis Anthony Darmann	40121/01701	1718

30636 7590 01/19/2011
FAY KAPLUN & MARCIN, LLP
150 BROADWAY, SUITE 702
NEW YORK, NY 10038

EXAMINER

ART UNIT	PAPER NUMBER
2836	

MAIL DATE	DELIVERY MODE
01/19/2011	PAPER

Please find below and/or attached an Office communication concerning this application or proceeding.

The time period for reply, if any, is set in the attached communication.

UNITED STATES PATENT AND TRADEMARK OFFICE

Commissioner for Patents
United States Patent and Trademark Office
P.O. Box 1450
Alexandria, VA 22313-1450
www.uspto.gov

FAY KAPLUN & MARCIN, LLP
150 BROADWAY, SUITE 702
NEW YORK NY 10038

In re application of	:	DECISION ON REQUEST TO
Francis Anthony DARMANN	:	PARTICIPATE IN PATENT
Serial No. 12/866,321	:	PROSECUTION HIGHWAY
Filed: August 05, 2010	:	PROGRAM AND
For: FAULT CURRENT LIMITER	:	UNDER 37 CFR 1.102(a)

This is a decision on the request to participate in the Patent Prosecution Highway (PPH) program filed August 5, 2010 and renewed on 21 December 2010.

The request and petition are **GRANTED**.

A grantable request to participate in the PPH program and petition to make special require:

(1) The U.S. application must validly claim priority under 35 U.S.C. 119(a) to one or more applications filed in the IPAU;

(2) Applicant must submit a copy of the allowable/patentable claim(s) from the IPAU application(s);

(3) All of the claims in the U.S. application must sufficiently correspond or be amended to sufficiently correspond to the allowable/patentable claim(s) in the IPAU application(s); and

(4) Examination of the U.S. application has not begun;

(5) Applicant must submit a copy of all of the Office actions from each of the IPAU application(s);

(6) Applicant must submit:
   a. An IDS listing the documents cited by the IPAU examiner in the IPAU Office action(s) (unless already submitted in this application)
   b. Copies of documents except U.S. patents or U.S. patent application publications (unless already submitted in this application); and

The request to participate in the PPH pilot program and petition comply with the above requirements. Accordingly, the above-identified application has been accorded "special" status.

Inquiries concerning this decision should be directed to Lee W. Young at 571-272-4549.

All other inquiries concerning the examination or status of the application is accessible in the PAIR system at http://www.uspto.gov/ebc.index.html.

This application will be forwarded to the examiner for action on the merits commensurate with this decision.

Lee W. Young
TQAS, Technology Center 2800 – Semiconductors
Electrical & Optical Systems & Components

UNITED STATES PATENT AND TRADEMARK OFFICE

UNITED STATES DEPARTMENT OF COMMERCE
United States Patent and Trademark Office
Address: COMMISSIONER FOR PATENTS
P.O. Box 1450
Alexandria, Virginia 22313-1450
www.uspto.gov

APPLICATION NO.	FILING DATE	FIRST NAMED INVENTOR	ATTORNEY DOCKET NO.	CONFIRMATION NO.
12/866,349	08/05/2010	Kota Suda	2010_0382A	1919

513 7590 04/04/2011
WENDEROTH, LIND & PONACK, L.L.P.
1030 15th Street, N.W.,
Suite 400 East
Washington, DC 20005-1503

EXAMINER

ART UNIT	PAPER NUMBER
3775	

NOTIFICATION DATE	DELIVERY MODE
04/04/2011	ELECTRONIC

Please find below and/or attached an Office communication concerning this application or proceeding.

The time period for reply, if any, is set in the attached communication.

Notice of the Office communication was sent electronically on above-indicated "Notification Date" to the following e-mail address(es):

ddalecki@wenderoth.com
eoa@wenderoth.com

UNITED STATES PATENT AND TRADEMARK OFFICE

Commissioner for Patents
United States Patent and Trademark Office
P.O. Box 1450
Alexandria, VA 22313-1450
www.uspto.gov

WENDEROTH, LIND & PONACK, L.L.P.
1030 15th Street, N.W.,
Suite 400 East
Washington DC 20005-1503

In re Application of	:	
SUDA, KOTA	:	DECISION ON REQUEST TO
Application No. 12/866,349	:	PARTICIPATE IN PATENT
Filed: April 28, 2010	:	PCT/PROSECUTION HIGHWAY
Attorney Docket No. 2010_0382A	:	PROGRAM AND PETITION
For: BORING INSTRUMENT GUIDING DEVICE	:	TO MAKE SPECIAL UNDER
AND BORING ASSEMBLY	:	37 CFR 1.102(a)

This is a decision on the request to participate in the Patent Prosecution Highway (PPH) program and the petition under 37 CFR 1.102(a), filed March 30, 2011 to make the above-identified application special.

The request and petition are granted.

A grantable request to participate in the PPH pilot program and petition to make special require:

(1) The U.S. application must validly claim priority under 35 U.S.C. 119(a) to one or more applications filed in the JPO;
(2) Applicant must submit a copy of the allowable/patentable claim(s) from the JPO/PCT application(s) along with an English translation thereof and a statement that the English translation is accurate;
(3) All the claims in the U.S. application must sufficiently correspond or be amended to sufficiently correspond to the allowable/patentable claim(s) in the JPO application(s);
(4) Examination of the U.S. application has not begun;
(5) Applicant must submit a copy of all the office actions from each of the JPO/PCT application(s) containing the allowable/patentable claim(s) along with an English translation thereof and a statement that the English translation is accurate; and
(6) Applicant must submit an IDS listing the documents cited by the JPO examiner in the JPO office action along with copies of documents except U.S. patents or U.S. patent application publications.

In light of the petition being properly submitted, the request to participate in the PPH program and the petition comply with the above requirements. Accordingly, the above-identified application has been accorded "special" status.

The applicant is encouraged to cite and submit all relevant prior art references, if any, to facilitate examination in this application. This application will be forwarded to an examiner for examination.

Telephone inquiries concerning this decision should be directed to Henry C. Yuen at 571-272-4856. All other inquiries concerning the examination or status of the application should be directed to Tom Barrett, SPE of Art Unit 3775, and 571-272-4746 for Class 606/79 and also accessible in the PAIR system at http://www.uspto.gov/ebc.index.html.

Petition is **granted**.

/Henry C. Yuen/

Henry C. Yuen, Special Programs Examiner
Technology Center 3700 – Mechanical Engineering,
Manufacturing and Products
571-272-4856

UNITED STATES PATENT AND TRADEMARK OFFICE

Commissioner for Patents
United States Patent and Trademark Office
P.O. Box 1450
Alexandria, VA 22313-1450
www.uspto.gov

FINNEGAN, HENDERSON,
FARABOW, GARRETT & DUNNER
LLP
901 NEW YORK AVENUE, NW
WASHINGTON DC 20001-4413

MAILED
JAN 18 2012
OFFICE OF PETITIONS

In re Application of
Yuji Kobayashi et al.
Application No.: 12/866,384
Filed: August 5, 2010
Attorney Docket No.: 04632.0149
For: Raw Material for Shot-Peening Materials, Finished Wire . . . Materials

: DECISION ON REQUEST TO
: PARTICIPATE IN THE PATENT
: PROSECUTION HIGHWAY
: PROGRAM AND PETITION
: TO MAKE SPECIAL UNDER
: 37 CFR 1.102(a)

This is a decision on the request to participate in the Patent Prosecution Highway (PPH) program and the petition under 37 CFR 1.102(a), filed November 21, 2011, to make the above-identified application special.

The request and petition are **GRANTED**.

Discussion

A grantable request to participate in the PPH pilot program and petition to make special require:

1. The U.S. application is

    a. a Paris Convention application which either
        i. validly claims priority under 35 U.S.C. 119(a) and 37 CFR 1.55 to one or more applications filed in the JPO, or
        ii. validly claims priority to a PCT application that contains no priority claims, or
    b. a national stage application under the PCT (an application which entered the national stage in the U.S. from a PCT international application after compliance with 35 U.S.C. 371), which PCT application
        i. validly claims priority to an application filed in the JPO, or
        ii. validly claims priority to a PCT application that contains no priority claims, or
        iii. contains no priority claim, or
    c. a so-called bypass application filed under 35 U.S.C. 111(a) which validly claims benefit under 35 U.S.C. 120 to a PCT application, which PCT application
        i. validly claims priority to an application filed in the JPO, or

ii. validly claims priority to a PCT application that contains no priority claims, or
iii. contains no priority claim;

2. Applicant must submit a copy of:
   a. The allowable/patentable claim(s) from the JPO application(s);
   b. An English translation of the allowable/patentable claim(s) and
   c. A statement that the English translation is accurate;
3. Applicant must:
   a. Ensure all the claims in the U.S. application must sufficiently correspond or be amended to sufficiently correspond to the allowable/patentable claim(s) in the JPO application(s) and
   b. Submit a claims correspondence table in English;
4. Examination of the U.S. application has <u>not</u> begun;
5. Applicant must submit:
   a. Documentation of prior office action:
      i. a copy of the office action(s) just prior to the "Decision to Grant a Patent" from each of the JPO application(s) containing the allowable/patentable claim(s) or
      ii. if the allowable/patentable claims(s) are from a "Notification of Reasons for Refusal" then the Notification of Reasons for Refusal or
      iii. if the JPO application is a first action allowance then no office action from the JPO is necessary should be indicated on the request/petition form;
   b. An English language translation of the JPO Office action from (5)(a)(i)-(ii) above
   c. A statement that the English translation is accurate;
6. Applicant must submit:
   a. An IDS listing the documents cited by the JPO examiner in the JPO office action (unless already submitted in this application)
   b. Copies of the documents except U.S. patents or U.S. patent application publications (unless already submitted in this application);

The request to participate in the PPH pilot program and petition comply with the above requirements. Accordingly, the above-identified application has been accorded "special" status.

Inquiries concerning this decision should be directed to Kimberly Inabinet at 571-272-4618.

As of May 25, 2010, the USPTO has eliminated the fee for the petition to make special for PPH petitions. The fee of $130 will be refunded to petitioner's credit card.

All other inquiries concerning the examination or status of the application is accessible in the PAIR system at http://www.uspto.gov/ebc.index.html.

This application will be forwarded to the examiner for action on the merits commensurate with this decision.

David Bucci
Petitions Examiner
Office of Petitions

MAILED

OCT 07 2010

PCT LEGAL ADMINISTRATION

UNITED STATES PATENT AND TRADEMARK OFFICE

Commissioner for Patents
United States Patent and Trademark Office
P.O. Box 1450
Alexandria, VA 22313-1450
www.uspto.gov

ROTHWELL, FIGG, ERNST & MANBECK, P.C.
1425 K STREET, N.W.
SUITE 800
WASHINGTON DC 20005

In re Application of	:	
KIM, Bo Ri, et al.	:	
Application No.: 12/866,440	:	
PCT No.: PCT/KR2008/007229	:	
Int. Filing Date: 05 December 2008	:	DECISION
Priority Date: 05 December 2007	:	
Att. Docket No.: 3570-133	:	
For: FLAME RETARDANT ...	:	
HIGH INFRARED TRANSMISSION	:	

Applicant's petition under 37 CFR 1.137(b), filed in the United States Patent and Trademark Office on 05 August 2010, is **GRANTED**.

Applicant states that the entire delay in filing the required reply from the due date for the required reply until the filing of a grantable petition under 37 CFR 1.137(b) was unintentional, as required by 37 CFR 1.137(b)(3). The appropriate national fee and petition fee have been submitted. A terminal disclaimer is not required as the application was filed on or after 08 June 1995. Accordingly, all requirements under 37 CFR 1.137(b) have been satisfied.

The fee for filing the search fee, examination fee or oath or declaration after 30 months will be charged to deposit account no. 02-2135, as authorized.

This application is being referred to the National Stage Processing Branch of the Office of Patent Application Processing for continued processing in accordance with this decision.

/Erin P. Thomson/

Erin P. Thomson
Attorney Advisor
PCT Legal Administration

Telephone: 571-272-3292

UNITED STATES PATENT AND TRADEMARK OFFICE

MAILED

DEC 10 2010

PCT LEGAL ADMINISTRATION

Commissioner for Patents
United States Patent and Trademark Office
P.O. Box 1450
Alexandria, VA 22313-1450
www.uspto.gov

HEWLETT-PACKARD COMPANY
Intellectual Property Administration
3404 E. Harmony Road
Mail Stop 35
FORT COLLINS CO 80528

In re Application of:
SIKHARULIDZE, David, et al.
U.S. Application No.: 12/866,454
PCT No.: PCT/EP2008/052321
International Filing Date: 26 February 2008
Priority Date: 26 February 2008
Attorney's Docket No.: 200703081-2
For: MATRIX-ADDRESSABLE DISPLAY DEVICE

DECISION REGARDING SUBMISSION UNDER 37 CFR 1.42

This decision is issued in response to applicants' submission on 28 October 2010 of a declaration executed on behalf of deceased inventor David SIKHARULIDZE by the deceased inventor's legal representatives, Tatiana and Irakli SIKHARULIDZE, considered herein under 37 CFR 1.42 and 1.497.

BACKGROUND

On 26 February 2008, applicants filed international application PCT/EP2008/052321. The international application did not claim an earlier priority date, and it designated the United States. On 03 September 2009, the International Bureau (IB) communicated a copy of the international application to the United States Patent and Trademark Office (USPTO). The deadline for submission of the basic national fee was thirty months from the priority date, i.e., 26 August 2010. The published international application identified David SIKHARULIDZE as the sole applicant/inventor for the United States.

On 05 August 2010, applicant filed a Transmittal Letter for entry into the national stage in the United States accompanied by, among other materials, payment of the basic national fee and an unexecuted declaration.

On 14 September 2010, the United States Designated/Elected Office (DO/EO/US) mailed a "Notification Of Missing Requirements" (Form PCT/DO/EO/905) indicating that an executed oath or declaration in compliance with 37 CFR 1.497 and the surcharge for filing the oath or declaration later than thirty months after the priority date were required.

On 28 October 2010, applicant filed a response to the Notification Of Missing Requirements that included the authorization to charge Deposit Account No. 08-2025 the required surcharge and the declaration considered herein.

DISCUSSION

37 CFR 1.42 states in part:

> In case of the death of the inventor, the legal representative (executor, administrator, etc.) of the deceased inventor may make the necessary oath or declaration, and apply for and obtain the patent.

Section 409.01(a) of the MPEP states that the application can also be executed by all of the heirs of the deceased inventor, where no legal representative has been appointed or is required to be appointed by law.

37 CFR 1.497(b)(2) states:

> If the person making the oath or declaration or any supplemental oath or declaration is not the inventor (§§ 1.42, 1.43, or 1.47) the oath or declaration shall state the relationship of the person to the inventor, and, upon information and belief, the facts which the inventor would have been required to state. If the person is the legal representative of a deceased inventor, the oath or declaration shall also state that the person is a legal representative and the citizenship, residence, and mailing address of the legal representative.

Pursuant to 37 CFR 1.497(b)(2), the citizenship for both the deceased inventor and the legal representative must be on the declaration (as well as the mailing address and residence information of the legal representative and all other information required under 37 CFR 1.497).

Here, the declaration filed 28 October 2010, and the supplemental sheet attached thereto, includes the required citizenship, residence, and mailing address information for the persons signing the declaration on behalf of the deceased inventor, David SIKHARULIDZE, and it identifies these persons as the "legal representatives" of the deceased inventor. The declaration also includes the citizenship of the deceased inventor and all other information required under 37 CFR 1.497. The declaration therefore includes all required information regarding the deceased inventor and his legal representatives.

However, the declaration as filed is defective under 37 CFR 1.497(a) and (b) because it does not properly identify the inventorship of record herein. Specifically, in addition to the supplemental sheet executed by Tatiana and Irakli SIKHARULIDZE as legal representatives of the deceased inventor, the declaration includes "Page 2 of 2" which identifies Tatiana and Irakli SIKHARULIDZE as the second and third inventors herein as was executed by Tatiana and Irakli SIKHARULIDZE apparently in such capacity. Because Tatiana and Irakli SIKHARULIDZE are not inventors of record in the present application, their inclusion on the declaration as additional inventors is improper.

Applicants must submit a revised declaration executed on behalf of the deceased inventor that is acceptable under 37 CFR 1.497 and 1.42. Such declaration must include all required information with respect to the deceased inventor and his legal representatives, as discussed above, it must be executed by the legal representatives in their capacity as legal representatives of the deceased inventor, and it must not list additional inventors beyond David SIKHARULIDZE, the sole inventor of record herein.[1]

CONCLUSION

For the reasons discussed above, the request for status under 37 CFR 1.42 with respect to deceased inventor David SIKHARULIDZE is **DISMISSED** without prejudice.

Applicants have **TWO (2) MONTHS** from the mailing date of this communication to submit a proper response under 37 CFR 1.42 and 37 CFR 1.497. Failure to provide a proper and timely response will result in abandonment. Extensions of time are available under 37 CFR 1.136(a).

A proper response must include an oath or declaration properly executed on behalf of the deceased inventor in compliance with 37 CFR 1.497 and 1.42, as discussed above. Such declaration must include all the information required under 37 CFR 1.497 with respect to the deceased inventor and his legal representatives, and it must not identify as inventors any persons other than the sole inventor of record.

Any further correspondence with respect to this matter may be filed electronically via EFS-Web selecting the document description "Petition for review and processing by the PCT Legal Office" or by mail addressed to Mail Stop PCT, Commissioner for Patents, Office of PCT Legal Administration, P.O. Box 1450, Alexandria, Virginia 22313-1450, with the contents of the letter marked to the attention of the Office of PCT Legal Administration.

/RichardMRoss/

Richard M. Ross
Attorney Advisor
Office Of PCT Legal Administration
Telephone: (571) 272-3296
Facsimile: (571) 273-0459

[1] If Tatiana and Irakli SIKHARULIDZE are in fact additional inventors who need to be added to the present application, then applicants must submit the materials required to correct inventorship under 37 CFR 1.497(d) (see MPEP section 1893.01(e)).

UNITED STATES PATENT AND TRADEMARK OFFICE

Commissioner for Patents
United States Patent and Trademark Office
P.O. Box 1450
Alexandria, VA 22313-1450
www.uspto.gov

MAILED

APR 13 2011

PCT LEGAL ADMINISTRATION

HEWLETT-PACKARD COMPANY
Intellectual Property Administration
3404 E. Harmony Road
Mail Stop 35
FORT COLLINS CO 80528

In re Application of:	:	
SIKHARULIDZE, David	:	DECISION REGARDING
U.S. Application No.: 12/866,454	:	RENEWED SUBMISSION UNDER
PCT No.: PCT/EP2008/052321	:	37 CFR 1.42
International Filing Date: 26 February 2008	:	
Priority Date: 26 February 2008	:	
Attorney's Docket No.: 200703081-2	:	
For: MATRIX-ADDRESSABLE	:	
DISPLAY DEVICE	:	

This decision is issued in response to applicants' "Response To Decision Dated December 10, 2010 Regarding Submission Under 37 C.F.R. § 1.42" filed on 09 February 2011, considered herein as a renewed submission under 37 CFR 1.42 and 1.497.

BACKGROUND

The procedural background for the present application was set forth in the decision mailed on 10 December 2010. The decision dismissed without prejudice applicant's request for status under 37 CFR 1.42 with respect to deceased inventor David SIKHARULIDZE, finding that the declaration filed on behalf of the deceased inventor was not acceptable as filed.

On 09 February 2011, applicant filed a response to the previous decision, accompanied by a revised declaration executed on behalf of the deceased inventor. The revised declaration is considered herein under 37 CFR 1.42 and 1.497.

DISCUSSION

The revised declaration filed on 09 February 2011 properly identifies the deceased inventor, David SIKHARULIDZE, as the sole inventor herein. The declaration also sets forth the deceased inventor's citizenship, identifies the persons signing on his behalf as his "legal representatives," and includes the citizenship, residence and mailing addresses of the legal representatives, as required.

In view of the above, the revised declaration filed on 09 February 2011 is acceptable under 37 CFR 1.42 and 1.497 with respect to the deceased inventor.

CONCLUSION

Applicant's renewed request for status under 37 CFR 1.42 with respect to deceased sole inventor David SIKHARULIDZE is **GRANTED**.

This application is being referred to the National Stage Processing Branch of the Office Of PCT Operations for further processing in accordance with this decision. The date under 35 U.S.C. 371(c)(1), (c)(2), and (c)(4) is 09 February 2011.

/RichardMRoss/

Richard M. Ross
Attorney Advisor
Office of PCT Legal Administration
Telephone: (571) 272-3296

UNITED STATES PATENT AND TRADEMARK OFFICE

UNITED STATES DEPARTMENT OF COMMERCE
United States Patent and Trademark Office
Address: COMMISSIONER FOR PATENTS
P.O. Box 1450
Alexandria, Virginia 22313-1450
www.uspto.gov

APPLICATION NO.	FILING DATE	FIRST NAMED INVENTOR	ATTORNEY DOCKET NO.	CONFIRMATION NO.
12/866,460	08/06/2010	Naoto Hanyu	IWI-33544	1983

7609 7590 03/01/2011
RANKIN, HILL & CLARK LLP
23755 Lorain Road - Suite 200
North Olmsted, OH 44070-2224

EXAMINER

ART UNIT	PAPER NUMBER
1615	

MAIL DATE	DELIVERY MODE
03/01/2011	PAPER

Please find below and/or attached an Office communication concerning this application or proceeding.

The time period for reply, if any, is set in the attached communication.

UNITED STATES PATENT AND TRADEMARK OFFICE

Commissioner for Patents
United States Patent and Trademark Office
P.O. Box 1450
Alexandria, VA 22313-1450
www.uspto.gov

MAR 0 1 2011

RANKIN, HILL & CLARK LLP
23755 Lorain Road - Suite 200
North Olmsted, OH 44070-2224

In re Application of	:	
HANYU ET AL.	:	DECISION ON REQUEST TO
Application No. 12/866,460	:	PARTICIPATE IN PATENT
Filed: August 6, 2010	:	PROSECUTION HIGHWAY
Attorney Docket No. IWI-33544	:	PROGRAM AND PETITION
	:	TO MAKE SPECIAL UNDER
	:	37 CFR 1.102(d)

This is a decision on the request to participate in the Patent Cooperation Treaty - Patent Prosecution Highway (PCT-PPH) program and the petition under 37 CFR 1.102(d), filed November 2, 2010, to make the above-identified application special.

The request and petition are **GRANTED**.

A grantable request to participate in the PCT-PPH program and petition to make special require:

(1) The U.S. application is (1) a national stage entry of the corresponding PCT application, or (2) a national stage entry of another PCT application which claims priority to the corresponding PCT application, or (3) a national stage application that claims domestic/foreign priority to the corresponding PCT application, or (4) a national application which forms the basis for the priority claim in the corresponding PCT application, or (5) a continuing application of a U.S. application that satisfies one of (1) to (4) above, or (6) a U.S. application that claims domestic benefit to a U.S. provisional application which forms the basis for the priority claim in the corresponding PCT application;
(2) The latest work product in the international phase of the PCT application corresponding to the U.S. application, namely the WO/ISA, or the WO/IPEA, or the IPER, indicates at least one claim in the PCT application has novelty, inventive step and industrial applicability;
(3) All the claims in the U.S. application must sufficiently correspond or be amended to sufficiently correspond to one or more of those claims indicated as having novelty, inventive step and industrial applicability and free of any observation described in Box VIII in the latest work product of the corresponding PCT application;
(4) Examination of the U.S. application has not begun;
(5) Applicant must submit a copy of latest international work product, WO/ISA, or WO/IPEA or IPER, which indicated that the claim(s) has/have novelty, inventive step and industrial applicability along with an English translation thereof if the copy of the latest international work product is not in the English language;
(6) Applicant must submit the claims from the corresponding PCT application which were indicated as having novelty, inventive step and industrial applicability in the latest work product

of the PCT application along with an English translation thereof and a statement that the English translation is accurate if the claims are not in the English language;
(7) Applicant must submit a claim correspondence table in English; and
(8) Applicant must submit an IDS listing the documents cited in the international work products (ISR, WO/ISA, WO/IPEA, IPER) of the PCT application along with copies of documents except U.S. patents or U.S. patent application publications.

The request to participate in the PCT-PPH program and petition comply with the above requirements. Accordingly, the above-identified application has been accorded "special" status.

Telephone inquiries concerning this decision should be directed to Cecilia Tsang at 571-272-0562.

All other inquiries concerning the examination or status of the application should be directed to Patent Application Information Retrieval (PAIR) system at the http://www.uspto.gov/ebc/index.html.

The application is being forwarded to the examiner for action on the merits commensurate with this decision.

Cecilia Tsang
Supervisory Patent Examiner
TC 1600

UNITED STATES PATENT AND TRADEMARK OFFICE

Commissioner for Patents
United States Patent and Trademark Office
P.O. Box 1450
Alexandria, VA 22313-1450
www.uspto.gov

PFIZER INC.
PATENT DEPARTMENT
Bld 114 M/S 9114
EASTERN POINT ROAD
GROTON CT 06340

MAILED

FEB 25 2011

PCT LEGAL ADMINISTRATION

In re Application of :
BAUDY, et al. :
Application No.: 12/866,477 :
PCT No.: PCT/US2009/033398 :
Int. Filing Date: 06 February 2009 :
Priority Date: 08 February 2008 :
Attorney Docket No.: PC50138A :
For: PHOSPHATE DERIVATIVES OF :
SUBSTITUTED BENZOXAZOLES :

DECISION ON PAPERS

UNDER 37 CFR 1.42

This decision is in response to applicant filing of 01 February 2011. The declaration filed is being treated as a request for status under 37 CFR 1.42. No petition fee is due.

BACKGROUND

On 06 February 2009, applicant filed international application PCT/US2009/033398, which claimed priority to an earlier application filed 08 February 2008. Pursuant to 37 CFR 1.495, the thirty-month period for paying the basic national fee in the United States expired at midnight on 08 August 2010.

On 06 August 2010, applicant filed a transmittal letter for entry into the national stage in the United States which was accompanied by payment of the requisite basic national fee as required by 35 U.S.C. 371(c)(1).

On 16 September 2010, applicant was mailed a "Notification of Missing Requirements" (Form PCT/DO/EO/905) informing applicant that an executed oath or declaration of the inventors in compliance with 37 CFR 1.497(a)-(b) was required. Applicant was afforded two months to file the required response and advised that this period could be extended pursuant to 37 CFR 1.136(a).

On 01 February 2011, applicant filed the declaration discussed herein accompanied by a petition for a three-month extension of time and payment of the appropriate extension of time fee. The response is considered timely filed.

DISCUSSION

37 CFR 1.42 When the Inventor is Dead, states, in part:

"In case of the death of the inventor, the legal representative (executor, administrator, etc.) of the deceased inventor may make the necessary oath or declaration, and apply for and obtain the patent."

The declaration submitted on 01 February 2011 was executed by Diane M. Schneider as "Administratrix" to the estate of deceased joint inventor, Ronald Magolda. However, the filed declaration does not satisfy the requirements under 37 CFR 1.497(b)(2):

If the person making the oath or declaration or any supplemental oath or declaration is not the inventor (§§ 1.42, 1.43, or § 1.47), the oath or declaration shall state the relationship of the person to the inventor, and, upon information and belief, the facts which the inventor would have been required to state. If the person signing the oath or declaration is the legal representative of a deceased inventor, the oath or declaration shall also state that the person is a legal representative and the citizenship, residence and mailing address of the legal representative.

The present declaration merely provides the citizenship of the deceased inventor.

CONCLUSION

Applicant's petition under 37 CFR 1.42 is **DISMISSED, without prejudice**.

Applicant is hereby afforded **TWO (2) MONTHS** from the mail date of this decision to file an oath or declaration in compliance with 37 CFR 1.497 (a)-(b). Any reconsideration request should include a cover letter entitled, "Renewed Petition Under 37 CFR 1.42." No additional petition fee is required. Extensions of time may be obtained under 37 CFR 1.136(a).

Any further correspondence with respect to this matter may be filed electronically via EFS-Web selecting the document description "Petition for review and processing by the PCT Legal Office" or by mail addressed to Mail Stop PCT, Commissioner for Patents, Office of PCT Legal Administration, P.O. Box 1450, Alexandria, Virginia 22313-1450, with the contents of the letter marked to the attention of the Office of PCT Legal Administration.

Derek A. Putonen
Attorney Advisor
Office of PCT Legal Administration
Tel: (571) 272-3294

UNITED STATES PATENT AND TRADEMARK OFFICE

Commissioner for Patents
United States Patent and Trademark Office
P.O. Box 1450
Alexandria, VA 22313-1450
www.uspto.gov

PFIZER INC.
PATENT DEPARTMENT
Bld 114 M/S 9114
EASTERN POINT ROAD
GROTON CT 06340

MAILED

MAY 17 2011

PCT LEGAL ADMINISTRATION

In re Application of	:	
BAUDY, et al.	:	
Application No.: 12/866,477	:	
PCT No.: PCT/US2009/033398	:	REQUEST FOR STATUS
Int. Filing Date: 06 February 2009	:	
Priority Date: 08 February 2008	:	UNDER 37 CFR 1.42
Attorney Docket No.: PC50138A	:	
For: PHOSPHATE DERIVATIVES OF	:	
SUBSTITUTED BENZOXAZOLES	:	

On 25 February 2011, applicant was mailed decision dismissing applicant's request for status under 37 CFR 1.42. Applicant was afforded two months to file any intended response.

On 26 April 2011, applicant filed the present response and supplemental declaration. A review of the filed declaration finds that it is in compliance with 37 CFR 1.497(a)-(b) and further to the decision of 25 February 2011, it properly lists all inventors, has been executed by inventors listed on the published international application as well as the legal representative to the estate of deceased inventor Ronald Magolda. The declaration sets for the residence, mailing address and citizenship of the legal representative and the citizenship of the deceased inventor and it is therefore proper to grant applicant's renewed request for status at this time.

The application has an international filing date of 06 February 2009 under 35 U.S.C. 363 and will be given a date of **26 April 2011** under 35 U.S.C. 371(c)(1), (c)(2) and (c)(4).

This application is being returned to the United States Designated/Elected Office (DO/EO/US) for treatment in accordance with this decision.

Derek A. Putonen
Attorney Advisor
Office of PCT Legal Administration
Tel: (571) 272-3294

UNITED STATES PATENT AND TRADEMARK OFFICE

Commissioner for Patents
United States Patent and Trademark Office
P.O. Box 1450
Alexandria, VA 22313-1450
www.uspto.gov

21658
DYKAS & SHAVER LLP
P.O. Box 877
Boise, ID 83701-0877

MAILED

FEB 03 2011

PCT LEGAL ADMINISTRATION

In re Application of
ELRICK, Andrew
U.S. Application No.: 12/866,495
PCT No.: PCT/GB2009/000483
Int. Filing Date: 23 February 2009
Priority Date: 21 February 2008
Attorney Docket No.: PETR110NUS
For: IMPROVED TUBING SECTION

DECISION

This decision is in response to the petition under 37 CFR 1.182 filed on 06 December 2010.

BACKGROUND

On 06 August 2010, applicant entered the national stage of PCT/GB2008/000483 using the USPTO EFS-Web system. The Office processed the application as the national stage of PCT/GB2008/000483 as requested.

On 18 August 2010, applicant filed an executed declaration listing the PCT number as PCT/GB2009/000483.

On 09 November 2010, a communication was mailed requesting clarification on the PCT number. Applicant was given two months to respond.

On 06 December 2010, applicant filed the subject petition under 37 CFR 1.182.

DISCUSSION

Applicant requests to correct the PCT number in the above-captioned national stage application to PCT/GB2009/000483 and have filed a petition under 37 CFR 1.182. The $400.00 petition fee has been paid.

A review of the above-captioned application file verifies that the wrong PCT number was identified (PCT/GB2008/000483) on the Application Data Sheet and when filing the application electronically using the USPTO EFS-Web system.

Applicant provided international papers for PCT/GB2009/000483 on initial filing. Moreover, the name of the inventor, the title, and the international filing date correspond

to PCT/GB2009/000483, not PCT/GB2008/000483. Applicant also requests that the international application be changed to PCT/GB2009/000483.

As such, it is clear that the subject application was intended to be filed as the national stage of PCT/GB2009/000483.

CONCLUSION

Applicant's petition under 37 CFR 1.182 is **GRANTED**.

USPTO records have been changed to reflect that the above-captioned application is the national stage of PCT/GB2009/000483.

This application is being forwarded to the National Stage Processing Division of the Office of PCT Operations for further processing.

James Thomson

James Thomson
Attorney Advisor
Office of PCT Legal Administration

Tel.: (571) 272-3302

UNITED STATES PATENT AND TRADEMARK OFFICE

Commissioner for Patents
United States Patent and Trademark Office
P.O. Box 1450
Alexandria, VA 22313-1450
www.uspto.gov

**NELSON MULLINS RILEY &
SCARBOROUGH LLP
FLOOR 30, SUITE 3000
ONE POST OFFICE SQUARE
BOSTON, MA 02109**

MAILED
JAN 1 1 2012
OFFICE OF PETITIONS

**In re Application of
Tomoatsu MURAKAMI
Application No.: 12/866,518
Filed: August 6, 2010
Attorney Docket No.: TOW-318US
For: COOLING DEVICE AND
ELECTRONIC VEHICLE USING
COOLING DEVICE**

**: DECISION ON REQUEST TO
: PARTICIPATE IN THE PATENT
: PROSECUTION HIGHWAY
: PROGRAM AND PETITION
: TO MAKE SPECIAL UNDER
: 37 CFR 1.102(a)**

This is a decision on the request to participate in the Patent Prosecution Highway (PPH) program and the petition under 37 CFR 1.102(a), filed 28 November 2011, to make the above-identified application special.

The request and petition are **GRANTED**.

Discussion

A grantable request to participate in the PPH pilot program and petition to make special require:

1. The U.S. application is

    a. a Paris Convention application which either
        i. validly claims priority under 35 U.S.C. 119(a) and 37 CFR 1.55 to one or more applications filed in the JPO, or
        ii. validly claims priority to a PCT application that contains no priority claims, or

    b. a national stage application under the PCT (an application which entered the national stage in the U.S. from a PCT international application after compliance with 35 U.S.C. 371), which PCT application
        i. validly claims priority to an application filed in the JPO, or
        ii. validly claims priority to a PCT application that contains no priority claims, or
        iii. contains no priority claim, or

c. a so-called bypass application filed under 35 U.S.C. 111(a) which validly claims benefit under 35 U.S.C. 120 to a PCT application, which PCT application
   i. validly claims priority to an application filed in the JPO, or
   ii. validly claims priority to a PCT application that contains no priority claims, or
   iii. contains no priority claim;

2. Applicant must submit a copy of:
   a. The allowable/patentable claim(s) from the JPO application(s);
   b. An English translation of the allowable/patentable claim(s) and
   c. A statement that the English translation is accurate;
3. Applicant must:
   a. Ensure all the claims in the U.S. application must sufficiently correspond or be amended to sufficiently correspond to the allowable/patentable claim(s) in the JPO application(s) and
   b. Submit a claims correspondence table in English;
4. Examination of the U.S. application has <u>not</u> begun;
5. Applicant must submit:
   a. Documentation of prior office action:
      i. a copy of the office action(s) just prior to the "Decision to Grant a Patent" from each of the JPO application(s) containing the allowable/patentable claim(s) or
      ii. if the allowable/patentable claims(s) are from a "Notification of Reasons for Refusal" then the Notification of Reasons for Refusal or
      iii. if the JPO application is a first action allowance then no office action from the JPO is necessary should be indicated on the request/petition form;
   b. An English language translation of the JPO Office action from (5)(a)(i)-(ii) above
   c. A statement that the English translation is accurate;
6. Applicant must submit:
   a. An IDS listing the documents cited by the JPO examiner in the JPO office action (unless already submitted in this application)
   b. Copies of the documents except U.S. patents or U.S. patent application publications (unless already submitted in this application);

The request to participate in the PPH pilot program and petition comply with the above requirements. Accordingly, the above-identified application has been accorded "special" status.

Telephone inquiries concerning this decision should be directed to April M. Wise at 571-272-1642.

All other inquiries concerning the examination or status of the application is accessible in the PAIR system at http://www.uspto.gov/ebc.index.html.

This application will be forwarded to the examiner for action on the merits commensurate with this decision once this application's formality reviews have been completed.

/dab/
David Bucci
Petitions Examiner
Office of Petitions

UNITED STATES PATENT AND TRADEMARK OFFICE

Commissioner for Patents
United States Patent and Trademark Office
P.O. Box 1450
Alexandria, VA 22313-1450
www.uspto.gov

MAILED

AUG 12 2011

PCT LEGAL ADMINISTRATION

DAVID S. RESNICK
NIXON PEABODY LLP
100 SUMMER STREET
BOSTON MA 02110-2131

In re Application of	:	
WALLACH, David	:	
Application No.: 12/866,532	:	DECISION ON PETITION
PCT No.: PCT/IL2009/000161	:	UNDER 37 CFR 1.137(b)
Int. Filing Date: 11 February 2009	:	
Priority Date: 10 February 2008	:	
Attorney Docket No.: 057878-000034-US	:	
For: SIVA 2 STABILIZATION	:	

The petition to revive under 37 CFR 1.137(b) filed 12 May 2011 in the above-captioned application is hereby **GRANTED** as follows:

Applicant's statement that "the entire delay in filing the required reply from the due date for the reply until the filing of a grantable petition under 37 CFR 1.137(b) was unintentional" meets the requirements of 37 CFR 1.137(b)(3).

A review of the application file reveals that applicant has submitted the required reply and the requirements of 37 CFR 1.137(b) have been satisfied. Therefore, the request to revive the application abandoned under 35 U.S.C. 371(d) is granted as to the National stage in the United States of America.

This application is being returned to the United States Designated/Elected Office for processing in accordance with this decision.

Anthony Smith
Attorney-Advisor
Office PCT Legal Administration
Tel.: 571-272-3298

UNITED STATES PATENT AND TRADEMARK OFFICE

Commissioner for Patents
United States Patent and Trademark Office
P.O. Box 1450
Alexandria, VA 22313-1450
www.uspto.gov

MAILED

NOV 24 2010

OFFICE OF PETITIONS

YOUNG & THOMPSON
209 Madison Street
Suite 500
Alexandria VA 22314

In re Application of	:	
Sergio Mezzini	:	
Application No. 12/866,629	:	DECISION ON PETITION
Deposited: August 6, 2010	:	
Attorney Docket No. 2525-1046	:	

This is a decision on the Letter, filed August 6, 2010 which is being treated as a petition under 37 CFR 1.59(b) to expunge information from the above identified application.

The petition is **dismissed**.

Petitioner requests that the preliminary amendment (EFS ID 8170398), filed on August 6, 2010, be expunged from the record. Petitioner gives no reason for expungement of this amendment other than another preliminary amendment is to be substituted therefore.

The petition is deficient because there is no statement that:

(B) the information submitted was unintentionally submitted and the failure to obtain its return would cause irreparable harm to the party who submitted the information or to the party in interest on whose behalf the information was submitted;
(C) the information has not otherwise been made public;
(D) there is a commitment on the part of the petitioner to retain such information for the period of any patent with regard to which such information is submitted.

Petitioner is directed to MPEP 724.05(II).

Petitions filed under 37 CFR 1.59(b) require a $200 petition fee under 37 CFR 1.17(g). The fee has been charged to petitioner's deposit account as authorized.

Telephone inquiries concerning this communication should be directed to Carl Friedman at (571) 272-6842.

Carl Friedman
Petitions Examiner
Office of Petitions

UNITED STATES PATENT AND TRADEMARK OFFICE

Commissioner for Patents
United States Patent and Trademark Office
P.O. Box 1450
Alexandria, VA 22313-1450
www.uspto.gov

YOUNG & THOMPSON
209 Madison Street
Suite 500
Alexandria VA 22314

MAILED
FEB 03 2011
OFFICE OF PETITIONS

In re Application of	:	
Sergio Mezzini	:	
Application No. 12/866,629	:	DECISION ON REFUND
Deposited: August 6, 2010	:	REQUEST
Attorney Docket No. 2525-1046	:	

This is a decision on the Request for Refund, filed January 25, 2011.

The Request is **dismissed**.

Applicant filed a Letter on August 6, 2010 requesting removal of a preliminary amendment filed on the same date. The Letter was treated as a request to expunge the preliminary amendment and was dismissed for reasons set forth in that decision. A petition to expunge papers in an application are filed under 37 CFR 1.59(a) requires a fee under 37 CFR 1.17(g), this fee is currently $200. The Letter included a fee authorization for fees required under 37 CFR 1.17 and the $200 petition fee was charged to applicant's deposit account.

The instant request for refund indicates the Letter filed August 6, 2010 was not a petition and the $200 petition fee should be refunded.

Requests to remove information from an application that was unintentionally submitted are covered under MPEP 724.05(II). Applicant's original request to "remove" a preliminary amendment can only be considered as a petition to expunge information unintentionally submitted in an application, this being the only mechanism for removing a paper from a file. Thus the Office properly construed the Letter as a petition under 37 CFR 1.59(a) and charged the proper petition fee as the Letter included a fee authorization.

For the reasons presented, the request for refund is dismissed.

Telephone inquiries concerning this communication should be directed to Carl Friedman at (571) 272-6842.

Carl Friedman
Petitions Examiner
Office of Petitions

Doc Code: PET.GREEN
Document Description: Petition for Green Tech Pilot

PTO/SB/420 (05-10)
Approved for use through 05/31/2010. OMB 0651-0062
U.S. Patent and Trademark Office; U. S. DEPARTMENT OF COMMERCE
Under the Paperwork Reduction Act of 1995, no persons are required to respond to a collection of information unless it displays a valid OMB control number.

PETITION TO MAKE SPECIAL UNDER THE GREEN TECHNOLOGY PILOT PROGRAM

Attorney Docket Number: 1621-2PUS	Application Number (if known): 12/866,642	Filing date: 08/06/2010

First Named Inventor: Athanasios GEORGAKOPOULOS

Title: DEVICE MEASURING THE WIND SPEED AND THE WIND DIRECTION

APPLICANT HEREBY REQUESTS TO PARTICIPATE IN THE GREEN TECHNOLOGY PILOT PROGRAM FOR THE ABOVE-IDENTIFIED APPLICATION. See Instruction Sheet on page 2.

This petition must be timely filed electronically using the USPTO electronic filing system, EFS-Web.

1. By filing this petition:

   Applicant is requesting early publication: Applicant hereby requests early publication under 37 CFR 1.219 and the publication fee set forth in 37 CFR 1.18(d) accompanies this request.

2. By filing this petition: applicant is agreeing to make an election without traverse in a telephonic interview and elect an invention that meets the eligibility requirements set forth in the notice titled "Pilot Program for Green Technologies Including Greenhouse Gas Reduction," as modified by the notice titled "Elimination of Classification Requirement in the Green Technology Pilot Program," each of which was published in the Federal Register, if the Office determines that the claims are not obviously directed to a single invention.

3. This request is accompanied by statements of special status for the eligibility requirement.

4. The application contains no more than three (3) independent claims and twenty (20) total claims.

5. The application does not contain any multiple dependent claims.

6. Other attachments: _____

Signature /John Christopher/	Date August 12, 2010
Name (Print/Typed) John Christopher	Registration Number 37596

***Note**: Signatures of all the inventors or assignees of record of the entire interest or their representative(s) are required in accordance with 37 CFR 1.33 and 11.18. Please see 37 CFR 1.4(d) for the form of the signature. If necessary, submit multiple forms for more than one signature, see below*.*

☑ *Total of 1 forms are submitted.

The information is required to obtain or retain a benefit by the public which is to file (and by the USPTO to process) an application. Confidentiality is governed by 35 U.S.C. 122 and 37 CFR 1.11 and 1.14. This collection is estimated to take 12 hours to complete, including gathering, preparing, and submitting the completed application form to the USPTO. Time will vary depending upon the individual case. Any comments on the amount of time you require to complete this form and/or suggestions for reducing this burden, should be sent to the Chief Information Officer, U.S. Patent and Trademark Office, U.S. Department of Commerce, P.O. Box 1450, Alexandria, VA 22313-1450. DO NOT SEND FEES OR COMPLETED FORMS TO THIS ADDRESS. **SEND TO: Commissioner for Patents, P.O. Box 1450, Alexandria, VA 22313-1450.**

If you need assistance in completing the form, call 1-800-PTO-9199 and select option 2.

Under the Paperwork Reduction Act of 1995, no persons are required to respond to a collection of information unless it displays a valid OMB control number.

Instruction Sheet for Petition to Make Special Under the Green Technology Pilot Program

(Not to be Submitted to the USPTO)

The following is a summary of the requirements (for more information see the notices (i) "Pilot Program for Green Technologies Including Greenhouse Gas Reduction" and (ii) "Elimination of Classification Requirement in the Green Technology Pilot Program," available on the USPTO web site at http://www.uspto.gov/patents/init_events/green_tech.jsp):

(1) The application must be a non-reissue, non-provisional utility application filed under 35 U.S.C. 111(a), or an international application that has entered the national stage in compliance with 35 U.S.C. 371. The application must be previously filed before the publication date of the notice cited above. Reexamination proceedings are excluded from this pilot program.

(2) The application must contain three or fewer independent claims and twenty or fewer total claims. The application must not contain any multiple dependent claims. For an application that contains more than three independent claims or twenty total claims, or multiple dependent claims, applicant must file a preliminary amendment in compliance with 37 CFR 1.121 to cancel the excess claims and/or the multiple dependent claims at the time the petition to make special is filed.

(3) The claims must be directed to a single invention that materially enhances the quality of the environment, or that materially contributes to: (1) the discovery or development of renewable energy resources; (2) the more efficient utilization and conservation of energy resources; or (3) green house gas emission reduction (see the eligibility requirements of sections II and III of the notice (i) cited above). The petition must include a statement that, if the USPTO determines that the claims are directed to multiple inventions (e.g., in a restriction requirement), applicant will agree to make an election without traverse in a telephonic interview, and elect an invention that meets the eligibility requirements in section II or III of the notice (i) cited above.

(4) The petition to make special must be timely filed electronically using the USPTO electronic filing system, EFS-Web, and selecting the document description of "Petition for Green Tech Pilot" on the EFS-Web screen. Applicant should use form PTO/SB/420, which is available as a Portable Document Format (PDF) fillable form in EFS-Web and on the USPTO Web site.

(5) The petition to make special must be filed at least one day prior to the date that a first Office action (which may be an Office action containing only a restriction requirement) appears in the Patent Application Information Retrieval (PAIR) system. Applicant may check the status of the application using PAIR.

(6) The petition to make special must be accompanied by a request for early publication in compliance with 37 CFR 1.219 and the publication fee set forth in 37 CFR 1.18(d).

Privacy Act Statement

The **Privacy Act of 1974 (P.L. 93-579)** requires that you be given certain information in connection with your submission of the attached form related to a patent application or patent. Accordingly, pursuant to the requirements of the Act, please be advised that: (1) the general authority for the collection of this information is 35 U.S.C. 2(b)(2); (2) furnishing of the information solicited is voluntary; and (3) the principal purpose for which the information is used by the U.S. Patent and Trademark Office is to process and/or examine your submission related to a patent application or patent. If you do not furnish the requested information, the U.S. Patent and Trademark Office may not be able to process and/or examine your submission, which may result in termination of proceedings or abandonment of the application or expiration of the patent.

The information provided by you in this form will be subject to the following routine uses:

1. The information on this form will be treated confidentially to the extent allowed under the Freedom of Information Act (5 U.S.C. 552) and the Privacy Act (5 U.S.C 552a). Records from this system of records may be disclosed to the Department of Justice to determine whether disclosure of these records is required by the Freedom of Information Act.
2. A record from this system of records may be disclosed, as a routine use, in the course of presenting evidence to a court, magistrate, or administrative tribunal, including disclosures to opposing counsel in the course of settlement negotiations.
3. A record in this system of records may be disclosed, as a routine use, to a Member of Congress submitting a request involving an individual, to whom the record pertains, when the individual has requested assistance from the Member with respect to the subject matter of the record.
4. A record in this system of records may be disclosed, as a routine use, to a contractor of the Agency having need for the information in order to perform a contract. Recipients of information shall be required to comply with the requirements of the Privacy Act of 1974, as amended, pursuant to 5 U.S.C. 552a(m).
5. A record related to an International Application filed under the Patent Cooperation Treaty in this system of records may be disclosed, as a routine use, to the International Bureau of the World Intellectual Property Organization, pursuant to the Patent Cooperation Treaty.
6. A record in this system of records may be disclosed, as a routine use, to another federal agency for purposes of National Security review (35 U.S.C. 181) and for review pursuant to the Atomic Energy Act (42 U.S.C. 218(c)).
7. A record from this system of records may be disclosed, as a routine use, to the Administrator, General Services, or his/her designee, during an inspection of records conducted by GSA as part of that agency's responsibility to recommend improvements in records management practices and programs, under authority of 44 U.S.C. 2904 and 2906. Such disclosure shall be made in accordance with the GSA regulations governing inspection of records for this purpose, and any other relevant (*i.e.*, GSA or Commerce) directive. Such disclosure shall not be used to make determinations about individuals.
8. A record from this system of records may be disclosed, as a routine use, to the public after either publication of the application pursuant to 35 U.S.C. 122(b) or issuance of a patent pursuant to 35 U.S.C. 151. Further, a record may be disclosed, subject to the limitations of 37 CFR 1.14, as a routine use, to the public if the record was filed in an application which became abandoned or in which the proceedings were terminated and which application is referenced by either a published application, an application open to public inspection or an issued patent.
9. A record from this system of records may be disclosed, as a routine use, to a Federal, State, or local law enforcement agency, if the USPTO becomes aware of a violation or potential violation of law or regulation.

UNITED STATES PATENT AND TRADEMARK OFFICE

UNITED STATES DEPARTMENT OF COMMERCE
United States Patent and Trademark Office
Address: COMMISSIONER FOR PATENTS
P.O. Box 1450
Alexandria, Virginia 22313-1450
www.uspto.gov

APPLICATION NO.	FILING DATE	FIRST NAMED INVENTOR	ATTORNEY DOCKET NO.	CONFIRMATION NO.
12/866,642	08/06/2010	Athanasios Georgakopoulos	1621-2PUS	3166

31292 7590 11/24/2010
CHRISTOPHER & WEISBERG, P.A.
200 EAST LAS OLAS BOULEVARD
SUITE 2040
FORT LAUDERDALE, FL 33301

EXAMINER

ART UNIT	PAPER NUMBER
2855	

MAIL DATE	DELIVERY MODE
11/24/2010	PAPER

Please find below and/or attached an Office communication concerning this application or proceeding.

The time period for reply, if any, is set in the attached communication.

UNITED STATES PATENT AND TRADEMARK OFFICE

Commissioner for Patents
United States Patent and Trademark Office
P.O. Box 1450
Alexandria, VA 22313-1450
www.uspto.gov

CHRISTOPHER & WEISBERG, P.A.
200 EAST LAS OLAS BOULEVARD
SUITE 2040
FORT LAUDERDALE FL 33301

In re Application of	:	
Athanasios GEORGAKOPOULOS	:	DECISION ON PETITION
Application No. 12/866,642	:	TO MAKE SPECIAL UNDER
Filed: August 06, 2010	:	THE GREEN TECHNOLOGY
Attorney Docket No. 1621-2PUS	:	PILOT PROGRAM

This is a decision on the petition under 37 CFR 1.102, filed on August 12, 2010, to make the above-identified application special under the pilot program for applications pertaining to Green Technologies as set forth 74 Federal Register Notice 64666 (December 8, 2009) and amended by 75 Federal Register Notice 28554 (May 21, 2010) and 75 Federal Register Notice 69049 (November 10, 2010).

The petition is **DISMISSED**.

If reconsideration of this decision is desired, a petition for reconsideration must be filed within ONE (1) MONTH OR THIRTY (30) DAYS from the mail date of this decision, whichever is longer. No extension of this time limit can be granted under 37 CFR 1.136(a) or (b). The petition for reconsideration should include an exhaustive attempt to provide the lacking item(s) noted below, since, after a decision on the petition for reconsideration, no further reconsideration or review of the matter will be undertaken by the Director.

A grantable petition to make an application special under 37 CFR 1.102 and the pilot program as set forth in 74 FR 64666 must be directed to a nonprovisional application filed under 35 USC 111(a) or be a national stage entry under 35 USC 371, exclusive of any reissue applications and be filed prior to the date of the notice, December 8, 2009.

In order to qualify for special status, the following requirements must be met. 1) The application must have no more than 3 independent claims and no more than 20 total claims. 2) The application must not contain any multiple dependent claims. 3) The petition must state the basis for seeking special status, i.e., the claimed invention either: A) materially enhances the quality of the environment or B) materially contributes to: i) the discovery or development of renewable energy resources, ii) the more efficient utilization and conservation of energy resources, or iii) greenhouse gas emission reduction. 4) If the disclosure is not clear on its face that the claimed invention materially contributes under category (A) or (B), the petition must be accompanied by a statement by the applicant, assignee, or an attorney/agent registered to practice before the

Office explaining how the materiality standard is met. 5) A statement that applicant will agree to make an election without traverse in a telephonic interview if a restriction requirement is made by the examiner. 6) The petition to make special must be filed electronically. 7) The petition must be filed at least one day prior to the date that a first Office Action appears in the Patent Application Information Retrieval (PAIR) system. 8) The petition must be accompanied by a request for early publication in compliance with 37 CFR 1.219 and include the publication fee as set forth in 37 CFR 1.18(d).

The requirement for a fee for consideration of the petition to make special for applications pertaining to Green Technologies has been waived.

The petition lacks item 4.

In regard to item 4, applicant's statement pertaining to how the materiality standard is met does not satisfy the requirements for this pilot. The instant petition includes a statement identifying the basis for the special status as more efficient utilization and conservation of energy resources. Specifically, the petition indicates that the present invention relates to a device for measuring both wind speed and wind direction using a single device and thus eliminating the need for multiple and potentially high energy using devices. However, the materiality standard does not permit an applicant to speculate as to how a hypothetical end-user might specially apply the invention in a manner that could more efficiently utilize and conserve energy resources. Any argument that the claimed invention can be used instead of other multiple and less efficient devices is considered speculate as to how a hypothetical end-user might specially apply the claimed invention. Further, it is not seen how a device for measuring wind speed and direction can reasonably considered a "Green Technology."

Any reconsideration of this decision should be submitted through the USPTO electronic filing system, EFS-Web, and selecting the document description of "Petition for Green Tech Pilot" on the EFS-Web screen.

Telephone inquiries concerning this decision should be directed to Lee W. Young at 571-272-4549.

The application is being forwarded to the Technology Center Art Unit 2855 for action in its regular turn.

Lee W. Young
Quality Assurance Specialist
Technology Center 2800

UNITED STATES PATENT AND TRADEMARK OFFICE

COMMISSIONER FOR PATENTS
UNITED STATES PATENT AND TRADEMARK OFFICE
P.O. BOX 1450
ALEXANDRIA, VA 22313-1450
www.uspto.gov

FULBRIGHT & JAWORSKI L.L.P.
98 SAN JACINTO BOULEVARD
SUITE 1100
AUSTIN, TX 78701-4255

MAILED
AUG 10 2011
PCT LEGAL ADMINISTRATION

In re Application of KAMEOKA et al
U.S. Application No.: 12/866,658
PCT Application No.: PCT/US2009/033577
Int. Filing Date: 09 February 2009
Priority Date Claimed: 07 February 2008
Attorney Docket No.: UTSC.P1021US
For: METHODS FOR DETECTING MOLECULE-MOLECULE INTERACTIONS WITH A SINGLE DETECTION CHANNEL

DECISION

This is in response to applicant's petition under 37 CFR 1.497(d) filed 13 May 2011.

BACKGROUND

On 09 February 2009, applicant filed international application PCT/US2009/033577, which claimed priority of an earlier United States application filed 07 February 2008. The thirty-month period for paying the basic national fee in the United States expired on 09 August 2010.

On 06 August 2010, applicant filed national stage papers in the United States Designated/Elected Office (DO/EO/US). The submission was accompanied by, *inter alia*, the basic national fee required by 35 U.S.C. 371(c)(1).

On 13 October 2010, the DO/EO/US mailed a Notification of Missing Requirements Under 35 U.S.C. 371 (Form PCT/DO/EO/905), which indicated that an oath or declaration in compliance with 37 CFR 1.497 must be filed.

On 10 February 2011, applicant filed an executed declaration.

On 12 April 2011, the DO/EO/US mailed a Notification of Defective Response (Form PCT/DO/EO/916), which identified a discrepancy with respect to the inventive entity.

On 13 May 2011, applicant filed the present petition under 37 CFR 1.497(d).

DISCUSSION

The petition states that Shih-chu Liao, Tiefeng Liu, and Beniamino Barbieri should be deleted as inventors.

37 CFR 1.497(d) states,

> If the oath or declaration filed pursuant to 35 U.S.C. 371(c)(4) and this section names an inventive entity different from the inventive entity set forth in the international application, or if a change to the inventive entity has been effected under PCT Rule 92bis subsequent to the execution of any oath or declaration which was filed in the application under PCT Rule 4.17(iv) or this section and the inventive entity thus changed is different from the inventive entity identified in any such oath or declaration, applicant must submit:
>
> (1) A statement from each person being added as an inventor and from each person being deleted as an inventor that any error in inventorship in the international application occurred without deceptive intention on his or her part;
>
> (2) The processing fee set forth in § 1.17(i); and
>
> (3) If an assignment has been executed by any of the original named inventors, the written consent of the assignee (see § 3.73(b) of this chapter); and
>
> (4) Any new oath or declaration required by paragraph (f) of this section.

With regard to item (1) above, the requisite statements have been provided.

With regard to item (2) above, the requisite processing fee has been provided.

With regard to item (3) above, statements of written consent from the purported assignees has been provided. However, the purported assignees have not established the right to take action in compliance with 37 CFR 3.73(b). The assignee must present documentary evidence of a chain of title from the inventors to the assignees or specify by reel and frame where such information is recorded in the Office. Furthermore, the statement of consent relating to The Texas A&M University System is not signed by a person whose title confers apparent authority to sign on behalf of the assignee. See MPEP 324.

With regard to item (4) above, a new declaration under 37 CFR 1.497(f) is not required.

CONCLUSION

For the reasons above, the petition under 37 CFR 1.497(d) is DISMISSED without prejudice.

If reconsideration on the merits of the petition is desired, a proper response must be filed within TWO (2) MONTHS from the mail date of this decision. Failure to timely file a proper response will result in ABANDONMENT of the application. Extensions of time are available under 37 CFR 1.136(a). Any reconsideration request should include a cover letter entitled "Renewed Petition Under 37 CFR 1.497(d)". No additional petition fee is required.

Any further correspondence with respect to this matter may be filed electronically via EFS-Web selecting the document description "Petition for review and processing by the PCT Legal Office" or by mail addressed to Mail Stop PCT, Commissioner for Patents, Office of PCT Legal Administration, P.O. Box 1450, Alexandria, Virginia 22313-1450, with the contents of the letter marked to the attention of the Office of PCT Legal Administration.

Bryan Lin
PCT Legal Examiner
PCT Legal Office

Telephone: 571-272-3303
Facsimile: 571-273-0459

UNITED STATES PATENT AND TRADEMARK OFFICE

Commissioner for Patents
United States Patent and Trademark Office
P.O. Box 1450
Alexandria, VA 22313-1450
www.uspto.gov

FULBRIGHT & JAWORSKI L.L.P.
98 SAN JACINTO BOULEVARD
SUITE 1100
AUSTIN, TX 78701-4255

MAILED

DEC 08 2011

PCT LEGAL ADMINISTRATION

In re Application of KAMEOKA et al	:	
U.S. Application No.: 12/866,658	:	
PCT Application No.: PCT/US2009/033577	:	
Int. Filing Date: 09 February 2009	:	
Priority Date Claimed: 07 February 2008	:	DECISION
Attorney Docket No.: UTSC.P1021US	:	
For: METHODS FOR DETECTING MOLECULE-MOLECULE INTERACTIONS WITH A SINGLE DETECTION CHANNEL	:	

This is in response to applicant's renewed petition under 37 CFR 1.497(d) filed on 10 November 2011.

BACKGROUND

On 09 February 2009, applicant filed international application PCT/US2009/033577, which claimed priority of an earlier United States application filed 07 February 2008. The thirty-month period for paying the basic national fee in the United States expired on 09 August 2010.

On 06 August 2010, applicant filed national stage papers in the United States Designated/Elected Office (DO/EO/US). The submission was accompanied by, *inter alia*, the basic national fee required by 35 U.S.C. 371(c)(1).

On 13 October 2010, the DO/EO/US mailed a Notification of Missing Requirements Under 35 U.S.C. 371 (Form PCT/DO/EO/905), which indicated that an oath or declaration in compliance with 37 CFR 1.497 must be filed.

On 10 February 2011, applicant filed an executed declaration.

On 12 April 2011, the DO/EO/US mailed a Notification of Defective Response (Form PCT/DO/EO/916), which identified a discrepancy with respect to the inventive entity.

On 13 May 2011, applicant filed a petition under 37 CFR 1.497(d).

On 10 August 2011, this Office mailed a decision dismissing the 13 May 2011 petition.

On 10 November 2011, applicant filed the instant renewed petition under 37 CFR 1.497(d).

DISCUSSION

The petition states that Shih-chu Liao, Tiefeng Liu, and Beniamino Barbieri should be deleted as inventors.

37 CFR 1.497(d) states,

> If the oath or declaration filed pursuant to 35 U.S.C. 371(c)(4) and this section names an inventive entity different from the inventive entity set forth in the international application, or if a change to the inventive entity has been effected under PCT Rule 92bis subsequent to the execution of any oath or declaration which was filed in the application under PCT Rule 4.17(iv) or this section and the inventive entity thus changed is different from the inventive entity identified in any such oath or declaration, applicant must submit:
>
> (1) A statement from each person being added as an inventor and from each person being deleted as an inventor that any error in inventorship in the international application occurred without deceptive intention on his or her part;
>
> (2) The processing fee set forth in § 1.17(i); and
>
> (3) If an assignment has been executed by any of the original named inventors, the written consent of the assignee (see § 3.73(b) of this chapter); and
>
> (4) Any new oath or declaration required by paragraph (f) of this section.

Applicant previously satisfied items (1), (2), and (4) above.

With regard to item (3) above, statements of written consent from the purported assignees has been provided. The assignees have established the right to take action in compliance with 37 CFR 3.73(b).

CONCLUSION

For the reasons above, the renewed petition under 37 CFR 1.497(d) is GRANTED.

The application has an International Filing Date under 35 U.S.C. 363 of 09 February 2009, and a date under 35 U.S.C. 371(c)(1), (c)(2), and (c)(4) of 10 February 2011.

This application is being forwarded to the United States Designated/Elected Office (DO/EO/US) for further processing in accordance with this decision.

Bryan Lin
PCT Legal Examiner
PCT Legal Office

Telephone: 571-272-3303
Facsimile: 571-273-0459

United States Patent and Trademark Office

Commissioner for Patents
United States Patent and Trademark Office
P.O. Box 1450
Alexandria, VA 22313-1450
www.uspto.gov

MAILED

DEC 13 2010

PCT LEGAL ADMINISTRATION

UW Center for Commercialization
4311 11th Avenue NE Suite 500
Seattle WA 98105

In re Application of
Hochberg et al.
Application No. 12/866,666
Filing Date: August 6, 2010
Atty. Docket No.: 44453.05US2
For: Enhanced Silicon All-Optical Modulator

DECISION

This is in response to the petition filed on 08 October 2010.

BACKGROUND

International application PCT/US2009/033516 was filed on 09 February 2009, claimed an earlier priority date of 07 February 2008, and designated the U.S. The 30 month time period for paying the basic national fee in the United States expired at midnight on 07 August 2010. Said international application became abandoned with respect to the national stage in the United States for failure to timely pay the requisite basic national fee.

On 14 September 2010, a Notification of Abandonment (Form PCT/DO/EO/909) was mailed, indicating that said international application had become abandoned with respect to the national stage in the United States for failure to timely pay the basic national fee.

DISCUSSION

Petitioner requests withdrawal of the holding of abandonment on the basis that this application should have been processed under 35 U.S.C. 111(a) and, as such, the basic national fee was not payable.

Review of the record reveals that the Electronic Acknowledgment Receipt associated with the correspondence filed on 06 August 2010 via EFS-Web indicates the instant application to be a national stage under 35 U.S.C. 371 of "PCT/US09/33516." However, inspection of the Transmittal Letter filed on 06 August 2010 reveals that it was designated as "only for new nonprovisional applications under 37 CFR 1.53(b)," implying that treatment under 35 U.S.C. 111(a) was desired. The accompanying Application Data Sheet (ADS) indicated the present application to be "a 371 of international" application "PCT/US09/33516."

The USPTO has adopted a bright-line test for determining whether application papers will be processed under 35 U.S.C. 371 or alternatively under 35 U.S.C. 111(a). Under this standard, any intended filing of an international application as a national stage application must clearly and unambiguously be identified as such and must satisfy all of the conditions set forth in 35 U.S.C. 371(c). The official PTO Notice published in the Official Gazette at 1077 OG 13 entitled "Minimum Requirements for Acceptance of Applications Under 35 U.S.C. 371 (the National Stage of PCT)" states, in part, the following:

The Patent and Trademark Office is continuing to receive application papers which do not clearly identify whether the papers (1) are being submitted to enter the national stage of the Patent Cooperation Treaty (PCT) under 35 U.S.C. 371 or (2) are being filed as a regular national application under 35 U.S.C. 111.

To clearly indicate an international application is being filed under 35 U.S.C. 371 the applicant should use the "Transmittal Letter for United States Designated Office" (Form PTO-1390) as the transmittal letter.

Alternatively, one of the following indications may be used:

1) the applicant shall clearly state in the transmittal or cover letter that he or she is filing under 35 U.S.C. 371 or entering the national stage under PCT; or

2) the applicant clearly identifies in the oath or declaration the specification to which it is directed by referring to a particular international application by PCT Serial Number and International Filing Date and that he or she is executing the declaration as, and seeking a U.S. Patent as, the inventor of the invention described in the identified international application.

If there are any conflicting instructions as to which section of the statute (371 or 111(a)) is intended the application will be accepted under 35 U.S.C. 111(a).

Inspection of the correspondence filed on 06 August 2010, described above, reveals that the Electronic Acknowledgment Receipt suggests that processing under 35 U.S.C. 371 was desired, whereas the Transmittal Letter suggests that processing under 35 U.S.C. 111(a) was intended. These indicia constitute conflicting instructions as to whether processing under 35 U.S.C. 371 rather than U.S.C. 111(a) was desired. Under the policy referenced above, this application properly should be processed under 35 U.S.C. 111(a). Since applicants have not shown sufficient cause (e.g., loss of rights) or lack of availability of an alternative remedy, and indeed have requested adherence to this policy, it would be appropriate, and consistent with the policy considerations described above, to process this application under 35 U.S.C. 111(a). Since the instant application properly should be processed under 35 U.S.C. 111(a), the basic national fee was not due; accordingly, the Notification of Abandonment mailed on 14 September 2010 was issued in error, and it is hereby **VACATED**. The holding of abandonment is **WITHDRAWN**.

DECISION

The petition is **GRANTED**, as described herein.

This application will be returned to the Office of Patent Application Processing for processing as an application filed under 35 U.S.C. 111(a). This processing will include the correction of the electronic records of the USPTO to show the application as in pending status and to show its correct status as an application filed under 35 U.S.C. 111(a).

/George Dombroske/
George Dombroske
PCT Legal Examiner
Office of PCT Legal Administration
Tel: (571) 272-3283

UNITED STATES PATENT AND TRADEMARK OFFICE

Commissioner for Patents
United States Patent and Trademark Office
P.O. Box 1450
Alexandria, VA 22313-1450
www.uspto.gov

Novak Druce + Quigg LLP
1000 Louisiana Street
Fifty-Third Floor
Houston TX 77002

MAILED

OCT 12 2010

PCT LEGAL ADMINISTRATION

In re Application of :
BROGAN et al. :
Application No.: 12/866,722 :
PCT No.: PCT/US2007/088691 :
Int. Filing Date: 21 December 2007 :
Priority Date: 05 January 2007 :
Attorney Docket No.: 20017.004.NPUS00 :
For: CHEMICAL COMPOSITION AND METHOD OF APPLYING SAME TO ENHANCE THE ADHESIVE BONDING OF GLASS LAMINATES :

DECISION ON PETITION UNDER 37 CFR 1.137(b)

This decision is issued in response to the petition under 37 CFR 1.137(b) filed 06 August 2010 and applicants' "Miscellaneous Letter" filed 17 August 2010 to revive the above-entitled application.

The petition to revive under 37 CFR 1.137(b) in the above-captioned application is hereby GRANTED as follows:

Applicant's statement that "the entire delay in filing the required reply from the due date for the reply until the filing of a grantable petition under 37 CFR 1.137(b) was unintentional" meets the requirements of 37 CFR 1.137(b)(3).

A review of the application file reveals that applicant has submitted the basic national fee and the requirements of 37 CFR 1.137(b) have been satisfied. Therefore, the request to revive the application abandoned under 35 U.S.C. 371(d) is granted as to the National stage in the United States of America.

This application is being returned to the United States Designated/Elected Office for processing in accordance with this decision.

Anthony Smith
Attorney-Advisor
Office of PCT Legal Administration
Tel: (571) 272-3298

UNITED STATES PATENT AND TRADEMARK OFFICE

Commissioner for Patents
United States Patent and Trademark Office
P.O. Box 1450
Alexandria, VA 22313-1450
www.uspto.gov

Novak Druce + Quigg LLP
1000 Louisiana Street
Fifty-Third Floor
Houston TX 77002

MAILED

JAN 24 2011

PCT LEGAL ADMINISTRATION

In re Application of:
BROGAN et al.
Application No.: 12/866,722
PCT No.: PCT/US2007/088691
Int. Filing Date: 21 December 2007
Priority Date: 05 January 2007
Attorney Docket No.: 20017.004.NPUS00
For: CHEMICAL COMPOSITION AND METHOD OF APPLYING SAME TO ENHANCE THE ADHESIVE BONDING OF GLASS LAMINATES

DECISION ON PETITION UNDER 37 CFR 1.47(a)

This decision is issued in response to applicants' "Petition and Declaration under CFR 1.47(a)" filed 16 November 2010 to accept the application without the signature of joint-inventor, Paul H. Brogan. Additionally, this decision is issued in response to applicants' "Supplemental Evidence in Support of Petition for Non-Signing Inventor" filed 17 November 2010.

BACKGROUND

On 21 December 2007, applicants filed international application PCT/US2007/088691. Pursuant to 37 CFR 1.495, the period for paying the basic national fee in the United States expired 30 months from the priority date, 05 July 2010.

On 06 August 2010, applicants filed a transmittal letter for entry into the national stage accompanied by, *inter alia,* the requisite basic national fee, a copy of the international application, and a petition to revive under 37 CFR 1.137(b). In a decision dated 12 October 2010, applicants' petition under 37 CFR 1.137(b) was granted.

On 22 October 2010, the United Stated Designated/Elected Office mailed a Notification of Missing Requirements under 35 U.S.C. 371 (From PCT/DO/EO/905) indicating that an oath or declaration in compliance with 37 CFR 1.497(a) and (b) must be filed. The notification set a two-month time limit in which to respond.

On 16 November 2010, applicants filed a petition under 37 CFR 1.47(a).

On 17 November 2010, applicants filed "Supplemental Evidence in Support of Petition for Non-Signing Inventor."

DISCUSSION

A petition under 37 CFR 1.47(a) must be accompanied by: (1) the fee under 37 CFR 1.17, (2) factual proof that the missing joint inventor refuses to execute the application or cannot be reached after diligent effort, (3) a statement of the last known address of the missing inventor, and (4) an oath or declaration by each 37 CFR 1.47(a) applicant on his or her own behalf and behalf of the nonsigning joint inventor. Applicants have satisfied Item (1), (3) and (4) in the present petition.

Regarding item (2) above, section 409.03(d) of the Manual of Patent Examining Procedure (M.P.E.P.), **Proof of Unavailability or Refusal**, states, in part:

> Where inability to find or reach a nonsigning inventor "after diligent effort" is the reason for filing under 37 CFR 1.47, a statement of facts should be submitted that fully describes the exact facts which are relied on to establish that a diligent effort was made....The statement of facts must be signed, where at all possible, by a person having firsthand knowledge of the facts recited therein. Statements based on hearsay will not normally be accepted. Copies of documentary evidence such as internet searches, certified mail return receipts, cover letters of instructions, telegrams, that support a finding that the nonsigning inventor could not be found or reached should be made part of the statement. The steps taken to locate the whereabouts of the nonsigning inventor should be included statement of facts. It is important that the statement contain facts as opposed to conclusions.
>
> * * *
>
> Where a refusal of the inventor to sign the application papers is alleged, the circumstances of the presentation of the application papers and of the refusal must be specified in a statement of facts by the person who presented the inventor with the application papers and/or to whom the refusal was made. Statements by a party not present when an oral refusal is made will not be accepted.
>
> Proof that a bona fide attempt was made to present a copy of the application papers (specification, including claims, drawings, and oath or declaration) to the nonsigning inventor for signature, but the inventor refused to accept delivery of the papers or expressly stated that the application papers should not be sent, may be sufficient. When there is an express oral refusal, that fact along with the time and place of the refusal must be stated in the statement of facts. When there is an express written refusal, a copy of the document evidencing that refusal must be made part of the statement of facts. The document may be redacted to remove material not related to the inventor's reasons for refusal.

> When it is concluded by the 37 CFR 1.47 applicant that a nonsigning inventor's conduct constitutes a refusal, all facts upon which that conclusion is based should be stated in the statement of facts in support of the petition or directly in the petition.

A review of the present petition reveals that petitioner has not satisfied item (2) above, in that, the petitioner has not shown that a bona fide attempt was made to present the application papers, including the specification, claims, and drawings to Paul H.Brogan. Petitioner fails to include evidence to demonstrate that the application papers were actually received by the nonsigning inventors at his last known address. Where the Office is being asked to accept the silence of the nonsigning inventor as evidence of a refusal to sign, petitioner must provide some evidence that the application materials have been received by the nonsigning applicant.

Additionally, it is unclear whether the petitioner is asserting that the nonsigning inventor (Paul H. Brogan) has refused to execute the application or cannot be located to execute the application. If Paul H. Brogan cannot be located, applicants must show that alternative means were employed, such as a search of telephone and/or Internet directories, in an attempt to locate the nonsigning inventors. As stated above, copies of documentary evidence such as a certified mail return receipt, cover letter of instruction, telegrams, etc., should be supplied by a person having firsthand knowledge of the facts. Therefore, item (2) has not been satisfied.

For the reasons stated above, it would not be appropriate to accept the application without the signature of Paul H. Brogan under 37 CFR 1.47(a) at this time.

CONCLUSION

The petition under 37 CFR 1.47(a) is DISMISSED without prejudice.

If reconsideration on the merits of this petition is desired, a proper response must be filed within TWO (2) MONTH from the mail date of this decision. Any reconsideration request should include a cover letter entitled "Renewed Petition Under 37 CFR 1.47(a)." No additional petition fee is required.

Any further correspondence with respect to this matter may be filed electronically via EFS-Web selecting the document description "Petition for review and processing by the PCT Legal Office" or by mail addressed to Mail Stop PCT, Commissioner for Patents, Office of PCT Legal Administration, P.O. Box 1450, Alexandria, Virginia 22313-1450, with the contents of the letter marked to the attention of the Office of PCT Legal Administration.

Anthony Smith
Attorney-Advisor
Office PCT Legal Administration
Tel.: 571-272-3298

UNITED STATES PATENT AND TRADEMARK OFFICE

Commissioner for Patents
United States Patent and Trademark Office
P.O. Box 1450
Alexandria, VA 22313-1450
www.uspto.gov

Novak Druce + Quigg LLP
1000 Louisiana Street
Fifty-Third Floor
Houston TX 77002

MAILED
MAY 23 2011
PCT LEGAL ADMINISTRATION

In re Application of: BROGAN et al. :
Application No.: 12/866,722 :
PCT No.: PCT/US2007/088691 :
Int. Filing Date: 21 December 2007 :
Priority Date: 05 January 2007 :
Attorney Docket No.: 20017.004.NPUS00 :
For: CHEMICAL COMPOSITION AND :
METHOD OF APPLYING SAME TO :
ENHANCE THE ADHESIVE BONDING
OF GLASS LAMINATES

DECISION ON PETITION
UNDER 37 CFR 1.47(a)

In a decision mailed by this Office on 24 January 2011, applicants' petition under 37 CFR 1.47(a) was dismissed without prejudice for failing to satisfy all the requirements of a grantable petition. Specifically, petitioner had not submitted adequate evidence that the nonsigning inventor (Paul H. Brogan) had received a copy of the complete application papers and refused to execute the application.

On 23 March 2011, petitioner filed the renewed petition considered herein. The 37 CFR 1.47(a) applicants provided evidence that a complete copy of the subject application was sent to the nonsigning inventor. The documents provided to Paul H. Brogan included instructions to sign and return the declaration. These materials provide the required firsthand statement regarding the delivery to the nonsigning inventor (Paul H. Brogan) of a copy of the complete application, and the nonsigning inventor's refusal to execute the application, with documentary evidence supporting the statement. The petition under 37 CFR 1.47(a) is **GRANTED**.

The application is accepted without the signature of nonsigning inventor, Paul H. Brogan. A notice of the acceptance of the application will be published in the Official Gazette, and a letter informing the nonsigning inventor of the application will be forwarded to the inventor's last-known address, as set forth in the petition.

The application is being forwarded to the National Stage Processing Branch of the Office of PCT Operations for further processing.

Anthony Smith
Attorney-Advisor
Office PCT Legal Administration
Tel.: 571-272-3298

UNITED STATES PATENT AND TRADEMARK OFFICE

Commissioner for Patents
United States Patent and Trademark Office
-hi. Box 1450
Alexandria, VA 22313-1450
www.uspto.gov

MAILED

MAY 23 2011

PCT LEGAL ADMINISTRATION

Paul H. Brogan
10122 Sagermill Drive
Houston, TX 77089, Japan

In re Application of: BROGAN et al.
Application No.: 12/866,722
PCT No.: PCT/US2007/088691
Int. Filing Date: 21 December 2007
Priority Date: 05 January 2007
Attorney Docket No.: 20017.004.NPUS00
For: CHEMICAL COMPOSITION AND METHOD OF APPLYING SAME TO ENHANCE THE ADHESIVE BONDING OF GLASS LAMINATES

Dear Paul H. Brogan:

You are named as an inventor in the above identified United States patent application, filed under the provisions of 37 CFR 1.47(a) and 35 U.S.C. 116. Should a patent be granted, you will be designated as an inventor.

As a named inventor, you are entitled to inspect any paper in the file wrapper of the application, order copies of all or any part thereof (at a prepaid cost per 37 CFR 1.19) or to make your position of record in the application. Alternatively, you may arrange to do any of the preceding through a registered patent agent or attorney presenting written authorization from you. If you care to join in the application, counsel of record (see below) would presumably assist you. Joining in the application would entail the filing of an appropriate oath or declaration by you pursuant to 37 CFR 1.63.

Anthony Smith
Attorney-Advisor
Office of PCT Legal Administration
Telephone: (571) 272-3298
Facsimile: (571) 273-0459

Counsel of Record:
Novak Druce + Quigg LLP
1000 Louisiana Street
Fifty-Third Floor
Houston TX 77002

MAILED

OCT 07 2010

PCT LEGAL ADMINISTRATION

UNITED STATES PATENT AND TRADEMARK OFFICE

Commissioner for Patents
United States Patent and Trademark Office
P.O. Box 1450
Alexandria, VA 22313-1450
www.uspto.gov

KNOBLE, YOSHIDA & DUNLEAVY
EIGHT PENN CENTER
SUITE 1350, 1628 JOHN F KENNEDY BLVD
PHILADELPHIA PA 19103

In re Application of	:	
GOSS, Kent, et al.	:	
Application No.: 12/866,810	:	
PCT No.: PCT/US2007/000800	:	
Int. Filing Date: 11 January 2007	:	DECISION
Priority Date: 11 January 2006	:	
Att. Docket No.: GRM418US	:	
For: METHOD AND APPARATUS FOR FORMING STRETCH BLOW MOLDED CONTAINERS	:	

Applicant's petition under 37 CFR 1.137(b), filed in the United States Patent and Trademark Office on 09 August 2010, is **GRANTED**.

Applicant states that the entire delay in filing the required reply from the due date for the required reply until the filing of a grantable petition under 37 CFR 1.137(b) was unintentional, as required by 37 CFR 1.137(b)(3). The appropriate national fee and petition fee have been submitted. A terminal disclaimer is not required as the application was filed on or after 08 June 1995. Accordingly, all requirements under 37 CFR 1.137(b) have been satisfied.

The fee for filing the search fee, examination fee or oath or declaration after 30 months will be charged to deposit account no. 50-0462, as authorized.

This application is being referred to the National Stage Processing Branch of the Office of Patent Application Processing for continued processing in accordance with this decision.

/Erin P. Thomson/

Erin P. Thomson
Attorney Advisor
PCT Legal Administration

Telephone: 571-272-3292

UNITED STATES PATENT AND TRADEMARK OFFICE

Commissioner for Patents
United States Patent and Trademark Office
P.O. Box 1450
Alexandria, VA 22313-1450
www.uspto.gov

William J. Sapone
Coleman Sudol Sapone P.C.
714 Colorado Avenue
Bridgeport CT 06605

MAILED
MAR 29 2011
PCT LEGAL ADMINISTRATION

In re Application of:
PRETI et al.
Application No.: 12/866,846
PCT No.: PCT/EP2009/051839
Int. Filing Date: 17 February 2009
Priority Date: 21 February 2008
Attorney's Docket No.: 377/9-2812
For: AN ELECTRO-HYDRAULIC DEVICE WITH AN ELECTRONIC CONTROL FOR DEFORMING FASTENING ELEMENTS

DECISION UNDER 37 CFR 1.182

This decision is issued in response to applicant's Petition under 37 CFR 1.182 filed 22 February 2011. The petition seeks to correct the bibliographic data for the national stage application papers filed 09 August 2010, so as to allow such materials to be treated as the U.S. national stage of PCT/EP2009/0051839.

BACKGROUND

On 10 February 2011, applicant was mailed a communication detailing the discrepancy between international application numbers on the Electronic Acknowledgement Receipt and other filing papers such as the Application Data Sheet.

On 22 February 2011, applicant filed the petition considered herein.

DISCUSSION

Applicant confirms that the correct international application is PCT/EP2009/051839. An examination of the originally filed papers finds that the correct international application number was listed on the Application Data Sheet filed 09 August 2010. Applicant's present submission included the required petition fee to correct applicant's clerical error. Accordingly, these materials satisfy the requirements for a grantable petition to correct applicant's error in the bibliographical data filed 09 August 2010 and to permit such materials to be treated as having been directed to international application PCT/EP2009/051839.

CONCLUSION

Applicant's petition under 37 CFR 1.182 is GRANTED.

As requested, the international application number, title of invention, and continuity data have been corrected and are now associated with PCT/EP2009/051839.

This application is being forwarded to the United States Designated/Elected Office for further processing.

Anthony Smith
Attorney Advisor
Office of PCT Legal Administration
Tel: 571-272-3298

PTO/SB/20PCT-US (09-10)
Approved for use through 01/31/2012. OMB 0651-0058
U.S. Patent and Trademark Office; U. S. DEPARTMENT OF COMMERCE
Under the Paperwork Reduction Act of 1995, no persons are required to respond to a collection of information unless it displays a valid OMB control number.

REQUEST FOR PARTICIPATION IN THE PATENT COOPERATION TREATY - PATENT PROSECUTION HIGHWAY (PCT-PPH) PILOT PROGRAM IN A U.S. APPLICATION WHERE THE USPTO WAS THE ISA OR IPEA

Application No:	12866904	Filing date:	08/10/2010
First Named Inventor:	Dudley E. Smith		
Title of the Invention:	Rotorcraft with Variable Incident Wing		

THIS REQUEST FOR PARTICIPATION IN THE PCT-PPH PILOT PROGRAM ALONG WITH THE REQUIRED DOCUMENTS MUST BE SUBMITTED VIA EFS-WEB. INFORMATION REGARDING EFS-WEB IS AVAILABLE AT HTTP://WWW.USPTO.GOV/EBC/EFS_HELP.HTML

APPLICANT HEREBY REQUESTS PARTICIPATION IN THE PCT-PPH PROGRAM AND PETITIONS TO MAKE THE ABOVE-IDENTIFIED APPLICATION SPECIAL UNDER THE PCT-PPH PROGRAM.

The above-identified application is (1) a national stage entry of the corresponding PCT application, or (2) a national stage entry of another PCT application which claims priority to the corresponding PCT application, or (3) a national application that claims domestic/ foreign priority to the corresponding PCT application, or (4) a national application which forms the basis for the priority claim in the corresponding PCT application, or (5) a continuing application of a U.S. application that satisfies one of (1) to (4) above, or (6) a U.S. application that claims domestic benefit to a U.S. provisional application which forms the basis for the priority claim in the corresponding PCT application.

The corresponding PCT application number(s) is/are: US09/33716

The international date of the corresponding PCT application(s) is/are:

02/11/2009

I. List of Required Documents:

a. **A copy of the latest international work product (WO/ISA, WO/IPEA, or IPER) in the above–identified corresponding PCT application(s)**

☐ Is attached

☒ Is not attached because the document is already in the U.S. application.

b. **A copy of all claims which were indicated as having novelty, inventive step and industrial applicability in the above-identified corresponding PCT application(s).**

☐ Is attached.

☒ Is not attached because the document is already in the U.S. application.

c. **English translations of the documents in a. and b. above are attached (if the documents are not in the English language). A statement that the English translation is accurate is attached for the document in b. above.**

This collection of information is required by 35 U.S.C. 119, 37 CFR 1.55, and 37 CFR 1.102(d). The information is required to obtain or retain a benefit by the public, which is to file (and by the USPTO to process) an application. Confidentiality is governed by 35 U.S.C. 122 and 37 CFR 1.11 and 1.14. This collection is estimated to take 2 hours to complete, including gathering, preparing, and submitting the completed application form to the USPTO. Time will vary depending upon the individual case. Any comments on the amount of time you require to complete this form and/or suggestions for reducing this burden should be sent to the Chief Information Officer, U.S. Patent and Trademark Office, U.S. Department of Commerce, P.O. Box 1450, Alexandria, VA 22313-1450. DO NOT SEND FEES OR COMPLETED FORMS TO THIS ADDRESS.

Under the Paperwork Reduction Act of 1995, no persons are required to respond to a collection of information unless it displays a valid OMB control number.

REQUEST FOR PARTICIPATION IN THE PCT-PPH PILOT PROGRAM IN A U.S. APPLICATION WHERE THE USPTO WAS THE ISA OR IPEA (continued)

Application No.:	12866904
First Named Inventor:	Dudley E. Smith

d. **(1) An information disclosure statement listing the documents cited in the international work products (ISR, WO/ISA, WO/IPEA, IPER) of the corresponding PCT application.**

☐ Is attached

☒ Has already been filed in the above-identified U.S. application on 9/30/2010

(2) Copies of all documents (except) for U.S. patents or U.S. patent application publications)

☐ Are attached.

☒ Have already been filed in the above-identified U.S. application on 9/30/2010

II. Claims Correspondence Table:

Claims in US Application	Patentable Claims in the corresponding PCT Application	Explanation regarding the correspondence
1-14	1-14	

III. All the claims in the US application sufficiently correspond to the patentable claims in the corresponding PCT application.

Signature /jamesewaltonpat/	Date 7/29/11
Name (Print/Typed) James E. Walton	Registration Number 47245

UNITED STATES PATENT AND TRADEMARK OFFICE

UNITED STATES DEPARTMENT OF COMMERCE
United States Patent and Trademark Office
Address: COMMISSIONER FOR PATENTS
P.O. Box 1450
Alexandria, Virginia 22313-1450
www.uspto.gov

APPLICATION NO.	FILING DATE	FIRST NAMED INVENTOR	ATTORNEY DOCKET NO.	CONFIRMATION NO.
12/866,904	08/10/2010	Dudley E. Smith	0837RF-H720-US	5696

38441 7590 11/16/2011
LAW OFFICES OF JAMES E. WALTON, PLLC
1169 N. BURLESON BLVD.
SUITE 107-328
BURLESON, TX 76028

EXAMINER
COLLINS, TIMOTHY D

ART UNIT	PAPER NUMBER
3644	

NOTIFICATION DATE	DELIVERY MODE
11/16/2011	ELECTRONIC

Please find below and/or attached an Office communication concerning this application or proceeding.

The time period for reply, if any, is set in the attached communication.

Notice of the Office communication was sent electronically on above-indicated "Notification Date" to the following e-mail address(es):

JIM@WALTONPLLC.COM

UNITED STATES PATENT AND TRADEMARK OFFICE

NOV 15 2011

Commissioner for Patents
United States Patent and Trademark Office
P.O. Box 1450
Alexandria, VA 22313-1450
www.uspto.gov

LAW OFFICES OF JAMES E. WALTON, PLLC
1169 N. BURLESON BLVD.
SUITE 107-328
BURLESON TX 76028

In re application of Smith et al. Application No. 12/866,904 Filed: August 10, 2010 For: ROTORCRAFT WITH VARIABLE INCIDENT WING	**DECISION ON REQUEST TO PARTICIPATE IN PATENT PROSECUTION HIGHWAY PROGRAM AND PETITION TO MAKE SPECIAL UNDER 37 CFR 1.102(a)**

This is a decision on the renewed request to participate in the Patent Prosecution Highway (PPH) program and the petition under 37 CFR 1.102(a), filed July 29, 2011 to make the above-identified application special.

The request and petition are **GRANTED**.

A grantable request to participate in the PPH program and petition to make special require:

(1) The U.S. application must disclose an eligible relationship to one or more PCT applications filed in the USPTO;
(2) Applicant must submit a copy of the allowable/patentable claim(s) from the PCT application(s) latest international work product (the written opinion or the IPER) along with an English translation thereof and a statement that the English translation is accurate;
(3) All the claims in the U.S. application must sufficiently correspond or be amended to sufficiently correspond to the allowable/patentable claim(s) in the PCT application(s);
(4) Examination of the U.S. application has not begun;
(5) Applicant must submit a copy of the latest international work product from the PCT application containing the allowable/patentable claim(s) along with an English translation thereof and a statement that the English translation is accurate;
(6) Applicant must submit an IDS listing the documents cited by the PCT examiner in the international work product along with copies of documents except U.S. patents or U.S. patent application publications.

The request to participate in the PPH pilot program complies with the above requirements. Therefore, the above-identified application has been accorded "special" status.

All other inquiries concerning the examination or status of the application should be directed to the Patent Application Information Retrieval (PAIR) system.

The application is being forwarded to the examiner for action on the merits commensurate with this decision.

Any inquiry regarding this decision should be directed to Mikado Buiz, Quality Assurance Specialist, at (571) 272-6578.

/ Mikado Buiz /

Mikado Buiz,
Quality Assurance Specialist
Technology Center 3600

MB/MB: 11/14/11

UNITED STATES PATENT AND TRADEMARK OFFICE

Commissioner for Patents
United States Patent and Trademark Office
P.O. Box 1450
Alexandria, VA 22313-1450
www.uspto.gov

THOMAS, KAYDEN, HORSTEMEYER & RISLEY, LLP
600 GALLERIA PARKWAY, S.E.
STE 1500
ATLANTA GA 30339-5994

MAILED

MAY 10 2011

PCT LEGAL ADMINISTRATION

In re Application of :
ANTONOV, et al. :
PCT No.: PCT/FR2009/050218 :
Application No.: 12/866,927 :
Int. Filing Date: 11 February 2009 :
Priority Date: 11 February 2008 :
Atty. Docket No.: 821950-1010 :
For: TRANSMISSION DEVICE FOR A MACHINE :
FOR PRODUCING ELECTRICITY FROM A :
VARIABLE SPEED MOTIVE POWER SOURCE, :
....SETTING A TRANSMISSION RATIO :

DECISION ON PETITION

UNDER 37 CFR 1.47(a)

This decision is in response to applicant's petition under 37 CFR § 1.47 filed 26 April 2011 in the United States Patent and Trademark Office (USPTO).

BACKGROUND

On 11 February 2009, applicant filed international application PCT/FR2009/050218 which claimed priority to an earlier application filed 11 February 2008. A copy of the international application was communicated from the International Bureau (IB) to the United States on 20 August 2009. Pursuant to 37 CFR 1.495, the thirty-month period for paying the basic national fee in the United States expired at midnight on 11 August 2010.

On 10 August 2010, applicant filed a transmittal letter for entry into the national stage in the United States, which was accompanied by the requisite basic national fee as required by 35 U.S.C. 371(c)(1), an English translation of the international application, an application data sheet, an Information Disclosure Statement and a preliminary amendment.

On 26 October 2010, applicant was mailed a "NOTIFICATION OF MISSING REQUIREMENTS UNDER 35 U.S.C. 371" (Form PCT/DO/EO/905) informing applicant of the need to provide an oath or declaration of the inventors, in compliance with 37 CFR 1.497(a) and (b), identifying the application by the international application number and international filing date. Applicant was afforded two months to file the proper reply and informed that this period could be extended pursuant to 37 CFR 1.136(a).

On 26 April 2011, applicant filed the present petition under 37 CFR 1.47(a) accompanied by a petition for a two-month extension of time and payment of the appropriate extension of time

fee. With payment of the two-month extension of time fee, the response is considered timely filed.

DISCUSSION

A petition under 37 CFR 1.47(a) must be accompanied by (1) the fee under 37 CFR 1.17(g), (2) factual proof that the missing joint investor refuses to execute the application or cannot be reached after diligent effort, (3) a statement of the last known address of the missing inventor, and (4) an oath or declaration by each 37 CFR 1.47(a) applicant on his or her own behalf and on behalf of the non-signing joint inventor. With the filing of the present petition and accompanying papers, applicant has satisfied all four items.

CONCLUSION

For the reasons above, applicant's petition under 37 CFR 1.47(a) is **GRANTED**.

The application has an international filing date of 11 February 2009 under 35 U.S.C. 363, and will be given a date of **26 April 2011** under 35 U.S.C. 371(c)(1), (c)(2) and (c)(4).

As provided in 37 CFR 1.47(c), a notice of the filing of this application will be forwarded to the non-signing inventor at his last known address of record. A notice of the filing of the application under 37 CFR 1.47(a) will be published in the Official Gazette.

This application is being returned to the DO/EO/US for processing in accordance with this decision.

Derek A. Putonen
Attorney Advisor
Office of PCT Legal Administration
Tel: (571) 272-3294

UNITED STATES PATENT AND TRADEMARK OFFICE

Commissioner for Patents
United States Patent and Trademark Office
P.O. Box 1450
Alexandria, VA 22313-1450
www.uspto.gov

Mr. Roumen Antonov
168, Boulevard Saint Germain
75006 PARIS
FRANCE

MAILED

MAY 10 2011

PCT LEGAL ADMINISTRATION

In re Application of :
ANTONOV, et al. :
PCT No.: PCT/FR2009/050218 :
Application No.: 12/866,927 :
Int. Filing Date: 11 February 2009 :
Priority Date: 11 February 2008 :
Atty. Docket No.: 821950-1010 :
For: TRANSMISSION DEVICE FOR A MACHINE :
FOR PRODUCING ELECTRICITY FROM A :
VARIABLE SPEED MOTIVE POWER SOURCE, :
....SETTING A TRANSMISSION RATIO :

DECISION ON PETITION

UNDER 37 CFR 1.47(a)

Dear Mr. Antonov:

You are named as an inventor in the above identified United States patent application, filed under the provisions of 37 CFR 1.47(a) and 35 U.S.C. 116. Should a patent be granted, you will be designated as an inventor. As a named inventor, you are entitled to inspect any paper in the file wrapper of the application, order copies of all or any part thereof (at a prepaid cost per 37 CFR 1.19) or to make your position of record in the application. Alternately, you may arrange to do any of the preceding through a registered patent agent or attorney presenting written authorization from you. If you care to join in the application, the law firm of record (see below) would presumably assist you. Joining in the application would entail the filing of the appropriate oath or declaration by you pursuant to 37 CFR 1.63.

Derek A. Putonen
Attorney Advisor
Office of PCT Legal Administration
Tel: (571) 272-3294

Counsel of record:
THOMAS, KAYDEN, HORSTEMEYER & RISLEY, LLP
600 GALLERIA PARKWAY, S.E.
STE 1500
ATLANTA GA 30339-5994
UNITED STATES OF AMERICA

UNITED STATES PATENT AND TRADEMARK OFFICE

Commissioner for Patents
United States Patent and Trademark Office
P.O. Box 1450
Alexandria, VA 22313-1450
www.uspto.gov

Mr. Bernard Pontet
27, rue Marancourt
91690 Saint Cyr La Riviere
FRANCE

MAILED

MAY 10 2011

PCT LEGAL ADMINISTRATION

In re Application of :
ANTONOV, et al. :
PCT No.: PCT/FR2009/050218 :
Application No.: 12/866,927 :
Int. Filing Date: 11 February 2009 :
Priority Date: 11 February 2008 :
Atty. Docket No.: 821950-1010 :
For: TRANSMISSION DEVICE FOR A MACHINE :
FOR PRODUCING ELECTRICITY FROM A :
VARIABLE SPEED MOTIVE POWER SOURCE, :
....SETTING A TRANSMISSION RATIO :

DECISION ON PETITION

UNDER 37 CFR 1.47(a)

Dear Mr. Pontet:

You are named as an inventor in the above identified United States patent application, filed under the provisions of 37 CFR 1.47(a) and 35 U.S.C. 116. Should a patent be granted, you will be designated as an inventor. As a named inventor, you are entitled to inspect any paper in the file wrapper of the application, order copies of all or any part thereof (at a prepaid cost per 37 CFR 1.19) or to make your position of record in the application. Alternately, you may arrange to do any of the preceding through a registered patent agent or attorney presenting written authorization from you. If you care to join in the application, the law firm of record (see below) would presumably assist you. Joining in the application would entail the filing of the appropriate oath or declaration by you pursuant to 37 CFR 1.63.

Derek A. Putonen
Attorney Advisor
Office of PCT Legal Administration
Tel: (571) 272-3294

Counsel of record:
THOMAS, KAYDEN, HORSTEMEYER & RISLEY, LLP
600 GALLERIA PARKWAY, S.E.
STE 1500
ATLANTA GA 30339-5994
UNITED STATES OF AMERICA

UNITED STATES PATENT AND TRADEMARK OFFICE

Commissioner for Patents
United States Patent and Trademark Office
P.O. Box 1450
Alexandria, VA 22313-1450
www.uspto.gov

BANNER & WITCOFF LTD
TEN SOUTH WACKER DRIVE
SUITE 3000
CHICAGO IL 60606

MAILED
APR 16 2012
OFFICE OF PETITIONS

In re Application of	:	
Thomas K. Kalili	:	
Application No. 12/866,930	:	DECISION ON PETITION
Filed: August 10, 2010	:	TO WITHDRAW
Attorney Docket No. 007087.00019	:	FROM RECORD
	:	

This is a decision on the Request to Withdraw as attorney or agent of record under 37 C.F.R. § 1.36(b), filed April 11, 2012.

The request is **APPROVED**.

The request was signed by Charles W. Shifley on behalf of the practitioners of record associated with Customer Number 22908.

Applicant is reminded that there is no attorney of record at this time.

All future correspondence will be directed to inventor Thomas Kalili at the address indicated below.

Telephone inquiries concerning this decision should be directed to Irvin Dingle at (571) 272-3210.

Irvin Dingle
Petitions Examiner
Office of Petitions

cc: Thomas Kalili
4169 N. Bedford Drive, Suite 102
Beverly Hills, CA 90210

UNITED STATES PATENT AND TRADEMARK OFFICE

UNITED STATES DEPARTMENT OF COMMERCE
United States Patent and Trademark Office
Address: COMMISSIONER FOR PATENTS
P.O. Box 1450
Alexandria, Virginia 22313-1450
www.uspto.gov

APPLICATION NUMBER	FILING OR 371(C) DATE	FIRST NAMED APPLICANT	ATTY. DOCKET NO./TITLE
12/866,930	08/10/2010	Thomas K. Kalili	007087.00019

CONFIRMATION NO. 5908

POWER OF ATTORNEY NOTICE

22908
BANNER & WITCOFF, LTD.
TEN SOUTH WACKER DRIVE
SUITE 3000
CHICAGO, IL 60606

OC000000053729353

Date Mailed: 04/16/2012

NOTICE REGARDING CHANGE OF POWER OF ATTORNEY

This is in response to the Power of Attorney filed 04/11/2012.

- The withdrawal as attorney in this application has been accepted. Future correspondence will be mailed to the new address of record. 37 CFR 1.33.

/idingle/

Office of Data Management, Application Assistance Unit (571) 272-4000, or (571) 272-4200, or 1-888-786-0101

UNITED STATES PATENT AND TRADEMARK OFFICE

UNITED STATES DEPARTMENT OF COMMERCE
United States Patent and Trademark Office
Address: COMMISSIONER FOR PATENTS
P.O. Box 1450
Alexandria, Virginia 22313-1450
www.uspto.gov

APPLICATION NUMBER	FILING OR 371(C) DATE	FIRST NAMED APPLICANT	ATTY. DOCKET NO./TITLE
12/866,930	08/10/2010	Thomas K. Kalili	007087.00019

CONFIRMATION NO. 5908

POA ACCEPTANCE LETTER

Thomas Kalili
4169 N. Bedford Drive, Suite 102
Beverly Hills, CA 90210

OC000000053729354

Date Mailed: 04/16/2012

NOTICE OF ACCEPTANCE OF POWER OF ATTORNEY

This is in response to the Power of Attorney filed 04/11/2012.

The Power of Attorney in this application is accepted. Correspondence in this application will be mailed to the above address as provided by 37 CFR 1.33.

/idingle/

Office of Data Management, Application Assistance Unit (571) 272-4000, or (571) 272-4200, or 1-888-786-0101

UNITED STATES PATENT AND TRADEMARK OFFICE

Commissioner for Patents
United States Patent and Trademark Office
P.O. Box 1450
Alexandria, VA 22313-1450
www.uspto.gov

MOORE & VAN ALLEN PLLC
P.O BOX 13706
RESEARCH TRIANGLE PARK NC 27709

MAILED
SEP 22 2011
OFFICE OF PETITIONS

Applicant: George V. Garner
Appl. No.: 12/866,948
International Filing Date: March 12, 2009
Title: CLEANING, SANITISING AND STERILISING PREPARATIONS
Attorney Docket No.: 026222.007
Pub. No.: US 2010/0323895 A1
Pub. Date: December 23, 2010

This is a decision on the request for a corrected patent application publication under 37 CFR 1.221(b), received on January 19, 2011, for the above-identified application.

The request is DISMISSED.

Applicant requests that the application be republished because the patent application publication contains a material error on the front page of the publication wherein the inventor first name was misprinted.

37 CFR 1.221 (b) is applicable "only when the Office makes a material mistake which is apparent from Office records.... Any request for a corrected publication or revised patent application publication other than provided as provided in paragraph (a) of this section must be filed within two months from the date of the patent application publication. This period is not extendable." A material mistake must affect the public's ability to appreciate the technical disclosure of the patent application publication, to determine the scope of the patent application publication, or to determine the scope of the provisional rights that an applicant may seek to enforce upon issuance of a patent. [1]

The error on the front page of the publication wherein the spelling of the inventor's first "George" was misprinted as "Goerge" may be Office error, but is not a material Office error under 37 CFR 1.221(b). The typographical error of the inventor's name does not affect the understanding of the application. The mistake does not affect the public's ability to appreciate the technical disclosure of the patent application publication, or determine the scope of the patent application publication or determine the scope of the provisional rights that an applicant may seek to enforce upon issuance of a patent.

[1] Changes to Implement Eighteen-Month Publication of Patent Applications, 65 FR 57023, 57038 (Sept. 20, 2000), 1239, Off. Gaz. Pat. Office Notices 63, 75 (Oct. 10, 2000) (final rule).

On September 15, 2010, a Filing Receipts was mailed by the Office, which included the error in the inventor's name. To avoid this type of problem in the future, applicant's representative should correct the error, if applicable and make a request for a corrected filing receipt prior to export of the application to the publisher and publication of the application.

Applicants are encouraged to use and submit an **eADS** (PTO/SB/14) as an EFS-Web Fillable Form, rather than a scanned PDF image, to benefit from having the data loaded directly into USPTO electronic systems. For questions contact the Patent EBC (Electronic Business Center):
Telephone: 1-866-217-9197 (toll-free) or E-mail: ebc@uspto.gov
571-272-4100 (local)

The applicant is advised that a "request for republication of an application previously published" may be filed under 37 CFR 1.221(a). Such a request for republication "must include a copy of the application compliance with the Office's electronic filing system requirements and be accompanied by the publication fee set forth in § 1.18(d) and the processing fee set forth in § 1.17(i)." If the request for republication does not comply with the electronic filing system requirements, the republication will not take place and the publication fee set forth in § 1.18(d) will be refunded. The processing fee will be retained.

A guide for filing a request for a Pre-Grant Publication, such as a request for republication, may be found on the link below:

http://www.uspto.gov/patents/process/file/efs/guidance/index.jsp

http://www.uspto.gov/ebc/portal/efs/pgpub_quickstart.pdf

Any request for republication under 37 CFR 1.221(a), must be submitted via the EFS system, as a "Pre-Grant Publication."

Inquiries relating to this matter may be directed to Mark Polutta at (571) 272-7709.

Mark Polutta
Senior Legal Advisor
Office of Patent Legal Administration
Office of the Deputy Commissioner
for Patent Examination Policy

10 SEP 2010

UNITED STATES PATENT AND TRADEMARK OFFICE

Commissioner for Patents
United States Patent and Trademark Office
P.O. Box 1450
Alexandria, VA 22313-1450
www.uspto.gov

LAUBSCHER & LAUBSCHER, P.C.
1160 SPA ROAD
SUITE 2B
ANNAPOLIS MD 21403

In re Application of MCLEAN et al. Application No.: 12/866,953 PCT No.: PCT/CA08/02144 Int. Filing Date: 10 December 2008 Priority Date: 10 December 2007 Attorney Docket No.: 25709 For: A METHOD FOR PERFORMING MICRO-PERIMETRY EXAMS BASED ON A RETINAL VOLUME IMAGE....	DECISION ON PETITION TO REVIVE UNDER 37 CFR 1.137(b)

The petition to revive under 37 CFR 1.137(b) filed 10 August 2010 in the above-captioned application is hereby **GRANTED** .

Applicant's statement that "the entire delay in filing the required reply from the due date for the required reply until the filing of a grantable petition under 37 CFR 1.137(b) was unintentional" meets the requirements of 37 CFR 1.137(b)(3).

A review of the application file reveals that the petition fee of $810 has been paid and the basic national fee of $165 was provided. Thus, the requirements of 37 CFR 1.137(b) have been satisfied. Therefore, the request to revive the application abandoned under 35 U.S.C. 371(d) is granted as to the National stage in the United States of America.

This application is being forwarded to the United States Designated/Elected Office for further processing, including issuance of a Notification of Missing Requirements indicating that an oath or declaration, in compliance with 37 CFR 1.497(a) and (b) and the surcharge for filing the oath or declaration after the thirty month period, is required.

/Cynthia M. Kratz/
Cynthia M. Kratz
Attorney Advisor
Office of PCT Legal Administration

Telephone: 571-272-3286

UNITED STATES PATENT AND TRADEMARK OFFICE

Commissioner for Patents
United States Patent and Trademark Office
P.O. Box 1450
Alexandria, VA 22313-1450
www.uspto.gov

MAILED

MAY 31 2011

PCT LEGAL ADMINISTRATION

LAUBSCHER & LAUBSCHER, P.C.
1160 SPA ROAD
SUITE 2B
ANNAPOLIS MD 21403

In re Application of MCLEAN et al.	:	
Application No.: 12/866,953	:	DECISION ON
PCT No.: PCT/CA08/02144	:	
Int. Filing Date: 10 December 2008	:	PETITION
Priority Date: 10 December 2007	:	
Attorney Docket No.: 25709	:	UNDER 37 CFR 1.47(a)
For: A METHOD FOR PERFORMING MICRO-	:	
PERIMETRY EXAMS BASED ON A RETINAL	:	
VOLUME IMAGE....		:

This is a decision on applicant's petition under 37 CFR 1.47(a) to accept the application without the signature of joint inventor JUSTIN PEDRO, and filed in the United States Patent and Trademark Office (USPTO) on 21 March 2011.

BACKGROUND

On 10 August 2010, applicant filed a transmittal letter requesting U.S. national stage entry of international application PCT/CA08/02144.

On 21 October 2010, a Notification of Missing Requirements was mailed to applicant indicating, *inter alia*, that an oath or declaration, in accordance with 37 CFR 1.497(a) and (b), was required.

On 21 March 2011, applicant filed the instant petition along with a declaration, executed by the joint inventor on behalf of the nonsigning inventor. The petition under 37 CFR 1.47(a), in an attempt to satisfy the requirements of 35 U.S.C. 371(c)(4), requested the acceptance of the application without the signature of inventor JUSTIN PEDRO alleging that the inventor refuses to sign the application papers.

DISCUSSION

A petition under 37 CFR §1.47(a) must be accompanied by (1) the fee under 37 CFR §1.17(g), (2) factual proof that the non-signing joint inventor(s) refuses to execute the application or cannot be reached after diligent effort, (3) a statement of the last known address of the non-signing inventor(s), and (4) an oath or declaration by each available joint inventor on his or her own behalf and on behalf of the non-signing joint inventor(s).

Petitioner satisfied Item (1) with the payment of the petition fee. Item (3) is satisfied because the last known address for the non-signing inventor was provided. Item (4) is satisfied with the submission of the declaration executed in compliance with 37 CFR 1.497(a) and (b).

With respect to Item (2) above, Section 409.03(d) of the Manual of Patent Examining Procedure (MPEP), Proof of Unavailability or Refusal[1], states, in pertinent part:

> A refusal by an inventor to sign an oath or declaration when the inventor has not been presented with the application papers does not itself suggest that the inventor is refusing to join the application unless it is clear that the inventor understands exactly what he or she is being asked to sign and refuses to accept the application papers. *A copy of the application papers should be sent to the last known address of the nonsigning inventor*, or, if the nonsigning inventor is represented by counsel, to the address of the nonsigning inventor's attorney.... *It is reasonable to require that the inventor be presented with the application papers before a petition under 37 CFR 1.47 is granted since such a procedure ensures that the inventor is apprised of the application to which the oath or declaration is directed. In re Gray*, 115 USPQ 80 (Comm'r Pat. 1956)
>
> Where a refusal of the inventor to sign the application papers is alleged, the circumstances of the presentation of the application papers and of the refusal must be specified in a statement of facts by the person who presented the inventor with the application papers and/or to whom the refusal was made. Statements by a party not present when an oral refusal is made will not be accepted.
>
> Proof that a *bona fide* attempt was made to present a copy of the application papers (specification, including claims, drawings, and oath or declaration) to the nonsigning inventor for signature, but the inventor refused to accept delivery of the papers or expressly stated that the application papers should not be sent, may be sufficient. When there is an express oral refusal, that fact along with the time and place of the refusal must be stated in the statement of facts. When there is an express written refusal, a copy of the document evidencing that refusal must be made part of the statement of facts. The document may be redacted to remove material not related to the inventor's reasons for refusal.
>
> When it is concluded by the 37 CFR 1.47 applicant that a nonsigning inventor's conduct constitutes a refusal, all facts upon which the conclusion is based should

---

[1] MPEP Section 409.03(d) also provides guidance where inability to find or reach a nonsigning inventor "after diligent effort" is the reason for filing under 37 CFR 1.47. A statement of facts should be submitted that fully describes the exact facts which are relied on to establish that a diligent effort was made. The statement of facts must be signed, where at all possible, by a person having first-hand knowledge of the facts recited therein. Statements based on hearsay will not normally be accepted. Copies of documentary evidence such as internet searches, certified mail return receipts, cover letters of instructions, telegrams, that support a finding that the nonsigning inventor could not be found or reached should be made part of the statement. The steps taken to locate the whereabouts of the nonsigning inventor should be included in the statement of facts. It is important that the statement contain facts as opposed to conclusions.

> be stated in a statement of facts in support of the petition or directly in the petition. If there is documentary evidence to support facts alleged in the petition or any statement of facts, such evidence should be submitted. Whenever a nonsigning inventor gives a reason for refusing to sign the application oath or declaration, that reason should be stated in the petition.

(Emphasis added.)

Here, Petitioner provided first-hand statement of facts from Monte Browder, Chief Patent Counsel to OPKO Health Product, Inc., regarding the refusal of the nonsigning inventor Justin Pedro. However, Mr. Browder does not have first-hand knowledge of the email exchange regarding presenting the nonsigning inventor with *a complete copy of the application papers, that is, specification, including claims and drawings, and an oath or declaration.* There is no statement from Carolynn Irvin, who appears to have sent a copy of the specification to the nonsigning inventor via email. There is no evidence that Mr. Pedro received a copy of the application. Also it appears that Letitia Newbold, IP Patent Paralegal for OPKO, communicated with the nonsigning inventor. Thus, it is appropriate to obtain her first hand statement of facts and that of

Proof of the delivery must accompany any renewed petition along with a first hand statement of facts. The circumstances of the presentation of the application papers and of the refusal must be specified in a statement of facts by the person who presented the inventor with the application papers and/or to whom the refusal was made. Statements by a party not present when an oral refusal is made will not be accepted.

As set forth above, Petitioner did not provide a first hand statement of facts under 37 CFR 1.47(a) which indicated that a complete copy of the application papers were sent to the nonsigning inventor and the inventor's refusal. Therefore, it cannot be concluded at this time that the nonsigning inventor refuses or is unavailable to sign the application. Petitioner has not satisfied Item (2). Accordingly, it is inappropriate to accord the national stage application status under 37 CFR §1.47(a) at this time.

CONCLUSION

The petition under 37 CFR §1.47(a) is **DISMISSED WITHOUT PREJUDICE**.

Any reconsideration on the merits of the petition under 37 CFR §1.47(a) must be filed within TWO (2) MONTHS from the mail date of this decision. Any reconsideration request should include a cover letter entitled "Renewed Petition Under 37 CFR §1.47(a)." No petition fee is required. Any further extensions of time available may be obtained under 37 CFR 1.136(a).

Any further correspondence with respect to this matter may be filed electronically via EFS-Web selecting the document description "Petition for review and processing by the PCT Legal Office" or by mail addressed to Mail Stop PCT, Commissioner for Patents, Office of PCT Legal Administration, P.O. Box 1450, Alexandria, Virginia 22313-1450, with the contents of the letter marked to the attention of the Office of PCT Legal Administration.

/Cynthia M. Kratz/
Cynthia M. Kratz
Attorney Advisor
Office of PCT Legal Administration

Telephone: 571-272-3286

UNITED STATES PATENT AND TRADEMARK OFFICE

Commissioner for Patents
United States Patent and Trademark Office
P.O. Box 1450
Alexandria, VA 22313-1450
www.uspto.gov

MAILED
SEP 21 2011
PCT LEGAL ADMINISTRATION

LAUBSCHER & LAUBSCHER, P.C.
1160 SPA ROAD
SUITE 2B
ANNAPOLIS MD 21403

In re Application of MCLEAN et al. Application No.: 12/866,953 PCT No.: PCT/CA08/02144 Int. Filing Date: 10 December 2008 Priority Date: 10 December 2007 Attorney Docket No.: 25709 For: A METHOD FOR PERFORMING MICRO-PERIMETRY EXAMS BASED ON A RETINAL VOLUME IMAGE....	DECISION ON PETITION UNDER 37 CFR 1.47(a)

This is a decision on applicant's renewed petition under 37 CFR 1.47(a) to accept the application without the signature of joint inventor JUSTIN PEDRO, and filed in the United States Patent and Trademark Office (USPTO) on 21 July 2011.

BACKGROUND

On 10 August 2010, applicant filed a transmittal letter requesting U.S. national stage entry of international application PCT/CA08/02144.

On 21 October 2010, a Notification of Missing Requirements was mailed to applicant indicating, *inter alia*, that an oath or declaration, in accordance with 37 CFR 1.497(a) and (b), was required.

On 21 March 2011, applicant filed the instant petition along with a declaration, executed by the joint inventor on behalf of the nonsigning inventor. The petition under 37 CFR 1.47(a), in an attempt to satisfy the requirements of 35 U.S.C. 371(c)(4), requested the acceptance of the application without the signature of inventor JUSTIN PEDRO alleging that the inventor refuses to sign the application papers. On 31 May 2011, a decision dismissing the petition was mailed to applicant.

DISCUSSION

A petition under 37 CFR §1.47(a) must be accompanied by (1) the fee under 37 CFR §1.17(g), (2) factual proof that the non-signing joint inventor(s) refuses to execute the application or cannot be reached after diligent effort, (3) a statement of the last known address of

the non-signing inventor(s), and (4) an oath or declaration by each available joint inventor on his or her own behalf and on behalf of the non-signing joint inventor(s).

Petitioner previously satisfied Items (1), (3) and (4).

With respect to Item (2) above, Section 409.03(d) of the Manual of Patent Examining Procedure (MPEP), Proof of Unavailability or Refusal, states, in pertinent part:

> A refusal by an inventor to sign an oath or declaration when the inventor has not been presented with the application papers does not itself suggest that the inventor is refusing to join the application unless it is clear that the inventor understands exactly what he or she is being asked to sign and refuses to accept the application papers. *A copy of the application papers should be sent to the last known address of the nonsigning inventor*, or, if the nonsigning inventor is represented by counsel, to the address of the nonsigning inventor's attorney.... *It is reasonable to require that the inventor be presented with the application papers before a petition under 37 CFR 1.47 is granted since such a procedure ensures that the inventor is apprised of the application to which the oath or declaration is directed. In re Gray*, 115 USPQ 80 (Comm'r Pat. 1956)
>
> Where a refusal of the inventor to sign the application papers is alleged, the circumstances of the presentation of the application papers and of the refusal must be specified in a statement of facts by the person who presented the inventor with the application papers and/or to whom the refusal was made. Statements by a party not present when an oral refusal is made will not be accepted.
>
> Proof that a *bona fide* attempt was made to present a copy of the application papers (specification, including claims, drawings, and oath or declaration) to the nonsigning inventor for signature, but the inventor refused to accept delivery of the papers or expressly stated that the application papers should not be sent, may be sufficient. When there is an express oral refusal, that fact along with the time and place of the refusal must be stated in the statement of facts. When there is an express written refusal, a copy of the document evidencing that refusal must be made part of the statement of facts. The document may be redacted to remove material not related to the inventor's reasons for refusal.
>
> When it is concluded by the 37 CFR 1.47 applicant that a nonsigning inventor's conduct constitutes a refusal, all facts upon which the conclusion is based should be stated in a statement of facts in support of the petition or directly in the petition. If there is documentary evidence to support facts alleged in the petition or any statement of facts, such evidence should be submitted. Whenever a nonsigning inventor gives a reason for refusing to sign the application oath or declaration, that reason should be stated in the petition.

(Emphasis added.)

Petitioner has now provided a first-hand statement of facts from Letitia Newbold, IP Patent Paralegal for OPKO Health Products, Inc., regarding the refusal of the nonsigning

inventor Justin Pedro. Ms. Newbold explains the email exchange regarding presenting the nonsigning inventor with a complete copy of the application papers, that is, specification, including claims and drawings, and an oath or declaration and his subsequent refusal to sign the application papers in an email dated 21 February 2011. Petitioner also presented a first hand statement from Carolynn Irvin, who sent a copy of the specification to the nonsigning inventor via email with a cc to Ms. Newbold.

Petitioner has now provided a first hand statements of fact under 37 CFR 1.47(a) which indicated that a complete copy of the application papers was sent to the nonsigning inventor and that the inventor refuses to sign them. Petitioner has satisfied Item (2). Accordingly, it is appropriate to accord the national stage application status under 37 CFR §1.47(a) at this time.

CONCLUSION

The petition under 37 CFR §1.47(a) is **GRANTED.**

The U.S. Designated/Elected Office has accepted the application as a 37 CFR 1.47(a) application using the declaration filed 21 March 2011. The application has an international filing date of 10 December 2008 under 35 U.S.C. 363, and a date of 21 March 2011 under 35 U.S.C. 371©.

As provided in 37 CFR 1.47(a), a notice of the filing of this application will be forwarded to the non-signing inventor at his respective last known address of record. Also, a notice of the filing of this application will be published in the Official Gazette.

/Cynthia M. Kratz/
Cynthia M. Kratz
Attorney Advisor
PCT Legal Office
Office of PCT Legal Administration

Telephone: 571-272-3286

UNITED STATES PATENT AND TRADEMARK OFFICE

Commissioner for Patents
United States Patent and Trademark Office
P.O. Box 1450
Alexandria, VA 22313-1450
www.uspto.gov

JUSTIN PEDRO
412 WELLINGTON STREET
KINGSTON, ONTARIO K7K 5R6
CANADA

MAILED

SEP 21 2011

PCT LEGAL ADMINISTRATION

In re Application of MCLEAN et al.
Application No.: 12/866,953
PCT No.: PCT/CA08/02144
Int. Filing Date: 10 December 2008
Priority Date: 10 December 2007
Attorney Docket No.: 25709
For: A METHOD FOR PERFORMING MICRO-PERIMETRY EXAMS BASED ON A RETINAL VOLUME IMAGE....

Dear Mr. Pedro:

You are named as an inventor in the above identified United States patent application, filed under the provisions of 37 CFR 1.47(a) and 35 U.S.C. § 116. Should a patent be granted, you will be designated as an inventor.

As a named inventor, you are entitled to inspect any paper in the file wrapper of the application, order copies of all or any part thereof (at a prepaid cost per 37 CFR 1.19) or to make your position of record in the application. Alternatively, you may arrange to do any of the preceding through a registered patent agent or attorney presenting written authorization from you. If you care to join in the application, counsel of record (see below) would presumably assist you. Joining in the application would entail the filing of an appropriate oath or declaration by you pursuant to 37 CFR 1.63.

/Cynthia M. Kratz/
Cynthia M. Kratz
Attorney Advisor
PCT Legal Office
Telephone: (571) 272-3286
Facsimile: (571) 273-0459

LAUBSCHER & LAUBSCHER, P.C.
1160 SPA ROAD
SUITE 2B
ANNAPOLIS MD 21403

UNITED STATES PATENT AND TRADEMARK OFFICE

Commissioner for Patents
United States Patent and Trademark Office
P.O. Box 1450
Alexandria, VA 22313-1450
www.uspto.gov

MAILED
NOV 22 2011
OFFICE OF PETITIONS

WOLF GREENFIELD & SACKS, P.C.
600 ATLANTIC AVENUE
BOSTON, MA 02210-2206

In re Application of Marinis et al.	:	
Application No. 12/866,966	:	
Int'l Filing Date: February 12, 2009	:	Decision on Request
Attorney Docket No. M0925.70222US02	:	
Pub. No.: US 2011/0097623 A1	:	
Pub. Date: April 28, 2011	:	

This is a decision on the request for a corrected patent application publication under 37 C.F.R. § 1.221(b) filed May 20, 2011.

The request is **dismissed**.

Applicants request the application be republished because of the mistakes in the patent application publication identified in the request.

37 C.F.R. § 1.221(b) states,

> [Relief under 37 C.F.R. § 1.221 is warranted] only when the Office makes a material mistake which is apparent from Office records.... Any request for corrected publication or revised patent application publication other than provided in paragraph (a) of this section must be filed within two months from the date of the patent application publication. This period is not extendable.

A mistake is only a "material" mistake if the mistake affects the public's ability to appreciate the technical disclosure of the patent application publication, determine the scope of the patent application publication, or determine the scope of the provisional rights that an applicant may seek to enforce upon issuance of a patent.[1]

The mistakes identified in the instant request are not material Office mistakes as required under 37 C.F.R. § 1.221(b). Specifically, the mistakes do not affect the public's ability to appreciate the technical disclosure of the patent application publication, determine the scope of the patent

[1] *See* Changes to Implement Eighteen-Month Publication of Patent Applications; Final Rule, 65 Fed. Reg. 57023, 57038 (Sept. 20, 2000), 1239 Off. Gaz. Pat. Office 63, 75 (Oct. 10, 2000). *See also* Section 1130 of the Manual of Patent Examining Procedure (8th ed., Rev. 8, July 2010).

application publication, or determine the scope of the provisional rights that an applicant may seek to enforce upon issuance of a patent. *See* MPEP § 1130(B). Therefore, relief under 37 C.F.R. § 1.221(b) is unwarranted and the request is dismissed.

Applicants are advised that a "request for republication of an application previously published" may be filed under 37 C.F.R. § 1.221(a). The request must include a copy of the application, which complies with the Office's electronic filing system requirements set forth in 37 C.F.R. § 1.18(d), and the required processing fee set forth in 37 C.F.R. § 1.17(i).

If the request for republication does not comply with the electronic filing system requirements, the republication will not take place and the publication fee set forth in 37 C.F.R. § 1.18(d) will be refunded. However, the processing fee will be retained.

Guidance for filing a request for a Pre-Grant Publication, such as a request for republication, may be found at the links below:

http://www.uspto.gov/patents/process/file/efs/guidance/index.jsp

http://www.uspto.gov/ebc/portal/efs/pgpub_quickstart.pdf

Any request for republication under 37 C.F.R. § 1.221(a), must be submitted via the EFS system as a "Pre-Grant Publication" and questions or any request for reconsideration of the instant decision should be addressed as follows:

By mail to: Mail Stop PGPUB
Commissioner for Patents
P.O. Box 1450
Alexandria, Va. 22313-1450

Telephone inquiries regarding this communication may be directed to Senior Petitions Attorney Steven Brantley at (571) 272-3203.

Christopher Bottorff
Petitions Examiner
Office of Petitions

UNITED STATES PATENT AND TRADEMARK OFFICE

Commissioner for Patents
United States Patent and Trademark Office
P.O. Box 1450
Alexandria, VA 22313-1450
www.uspto.gov

CURATOLO SIDOTI CO., LPA
24500 CENTER RIDGE ROAD, SUITE 280
CLEVELAND OH 44145

MAILED

NOV 23 2011

OFFICE OF PETITIONS

Applicants: Christian Schwede, et al.
Appl. No.: 12/866,973
International Filing Date: January 12, 2009
Title: CONTINUOUSLY OPERATED METHOD FOR PRODUCING COPOLYMERS
Attorney Docket: COC.P60572
Pub. No.: US 20110190422 A1
Pub. Date: August 4, 2011

This is a decision on the request for a corrected patent application publication under 37 CFR 1.221(b), received on August 26, 2011, for the above-identified application.

The request is granted.

The corrected patent application publication will be published in due course, unless the patent issues before the application is republished.

Inquiries relating to this matter may be directed to Karen Creasy at (571) 272-3208.

/Christopher Bottorff/

Christopher Bottorff
Petitions Examiner
Office of Petitions

PTO/SB/20PCT-KR (06-10)
Approved for use through 01/31/2012. OMB 0651-0058
U.S. Patent and Trademark Office; U. S. DEPARTMENT OF COMMERCE
Under the Paperwork Reduction Act of 1995, no persons are required to respond to a collection of information unless it displays a valid OMB control number.

REQUEST FOR PARTICIPATION IN THE PATENT COOPERATION TREATY - PATENT PROSECUTION HIGHWAY (PCT-PPH) PILOT PROGRAM BETWEEN THE KOREAN INTELLECTUAL PROPERTY OFFICE (KIPO) AND THE USPTO

Application No:	12/866,981	Filing date:	August 10, 2010
First Named Inventor:	Yong Goo Lee		
Title of the Invention:	Printed Circuit Board		

THIS REQUEST FOR PARTICIPATION IN THE PCT-PPH PILOT PROGRAM ALONG WITH THE REQUIRED DOCUMENTS MUST BE SUBMITTED VIA EFS-WEB. INFORMATION REGARDING EFS-WEB IS AVAILABLE AT HTTP://WWW.USPTO.GOV/EBC/EFS_HELP.HTML

APPLICANT HEREBY REQUESTS PARTICIPATION IN THE PCT-PPH PROGRAM AND PETITIONS TO MAKE THE ABOVE-IDENTIFIED APPLICATION SPECIAL UNDER THE PCT-PPH PROGRAM.

The above-identified application is (1) a national stage entry of the corresponding PCT application, or (2) a national stage entry of another PCT application which claims priority to the corresponding PCT application, or (3) a national application that claims domestic/ foreign priority to the corresponding PCT application, or (4) a national application which forms the basis for the priority claim in the corresponding PCT application, or (5) a continuing application of a U.S. application that satisfies one of (1) to (4) above, or (6) a U.S. application that claims domestic benefit to a U.S. provisional application which forms the basis for the priority claim in the corresponding PCT application.

The corresponding PCT application number(s) is/are: PCT/KR2008/006897

The international date of the corresponding PCT application(s) is/are: November 21, 2008

I. List of Required Documents:

a. **A copy of the latest international work product (WO/ISA, WO/IPEA, or IPER) in the above–identified corresponding PCT application(s)**

- [x] Is attached.
- [ ] Is not attached because the document is already in the U.S. application.

b. **A copy of all claims which were indicated as having novelty, inventive step and industrial applicability in the above-identified corresponding PCT application(s).**

- [ ] Is attached.
- [x] Is not attached because the document is already in the U.S. application.

c. **English translations of the documents in a. and b. above are attached (if the documents are not in the English language). A statement that the English translation is accurate is attached for the document in b. above.**

This collection of information is required by 35 U.S.C. 119, 37 CFR 1.55, and 37 CFR 1.102(d). The information is required to obtain or retain a benefit by the public, which is to file (and by the USPTO to process) an application. Confidentiality is governed by 35 U.S.C. 122 and 37 CFR 1.11 and 1.14. This collection is estimated to take 2 hours to complete, including gathering, preparing, and submitting the completed application form to the USPTO. Time will vary depending upon the individual case. Any comments on the amount of time you require to complete this form and/or suggestions for reducing this burden should be sent to the Chief Information Officer, U.S. Patent and Trademark Office, U.S. Department of Commerce, P.O. Box 1450, Alexandria, VA 22313-1450. DO NOT SEND FEES OR COMPLETED FORMS TO THIS ADDRESS.

Approved for use through 01/31/2012. OMB 0651-0058
U.S.Patent and Trademark Office; U.S. DEPARTMENT OF COMMERCE
Under the Paperwork Reduction Act of 1995, no persons are required to respond to a collection of information unless it displays a valid OMB control number.

REQUEST FOR PARTICIPATION IN THE PCT-PPH PILOT PROGRAM BETWEEN THE KIPO AND THE USPTO

(continued)

Application No.:	To be assigned
First Named Inventor:	Yong Goo Lee

d. **(1) An information disclosure statement listing the documents cited in the international work products (ISR, WO/ISA, WO/IPEA, IPER) of the corresponding PCT application.**

■ Is attached

☐ Has already been filed in the above-identified U.S. application on _____

(2) Copies of all documents (except) for U.S. patents or U.S. patent application publications)

■ Are attached.

Have already been filed in the above-identified U.S. application on _____

II. Claims Correspondence Table:

Claims in US Application	Patentable Claims in the corresponding PCT Application	Explanation regarding the correspondence
1	1	Identical with formal changes
2	2	Same
3	3	Identical with formal changes
4	4	Identical with formal changes
5	5	Same
6	6	Identical with formal changes
7	7	Same
8	8	Identical with formal changes
9	9	Identical with formal changes
10	10	Identical with formal changes
11	11	Identical with formal changes
12	12	Identical with formal changes
13-15		Cancelled
16-18	16	Identical with formal changes

III. All the claims in the US application sufficiently correspond to the patentable claims in the corresponding PCT application.

Signature	/Kisuk Lee/	Date	August 10, 2010
Name (Print/Typed)	Kisuk Lee	Registration Number	L0,512

Privacy Act Statement

The **Privacy Act of 1974 (P.L. 93-579)** requires that you be given certain information in connection with your submission of the attached form related to a patent application or patent. Accordingly, pursuant to the requirements of the Act, please be advised that: (1) the general authority for the collection of this information is 35 U.S.C. 2(b)(2); (2) furnishing of the information solicited is voluntary; and (3) the principal purpose for which the information is used by the U.S. Patent and Trademark Office is to process and/or examine your submission related to a patent application or patent. If you do not furnish the requested information, the U.S. Patent and Trademark Office may not be able to process and/or examine your submission, which may result in termination of proceedings or abandonment of the application or expiration of the patent.

The information provided by you in this form will be subject to the following routine uses:

1. The information on this form will be treated confidentially to the extent allowed under the Freedom of Information Act (5 U.S.C. 552) and the Privacy Act (5 U.S.C 552a). Records from this system of records may be disclosed to the Department of Justice to determine whether disclosure of these records is required by the Freedom of Information Act.
2. A record from this system of records may be disclosed, as a routine use, in the course of presenting evidence to a court, magistrate, or administrative tribunal, including disclosures to opposing counsel in the course of settlement negotiations.
3. A record in this system of records may be disclosed, as a routine use, to a Member of Congress submitting a request involving an individual, to whom the record pertains, when the individual has requested assistance from the Member with respect to the subject matter of the record.
4. A record in this system of records may be disclosed, as a routine use, to a contractor of the Agency having need for the information in order to perform a contract. Recipients of information shall be required to comply with the requirements of the Privacy Act of 1974, as amended, pursuant to 5 U.S.C. 552a(m).
5. A record related to an International Application filed under the Patent Cooperation Treaty in this system of records may be disclosed, as a routine use, to the International Bureau of the World Intellectual Property Organization, pursuant to the Patent Cooperation Treaty.
6. A record in this system of records may be disclosed, as a routine use, to another federal agency for purposes of National Security review (35 U.S.C. 181) and for review pursuant to the Atomic Energy Act (42 U.S.C. 218(c)).
7. A record from this system of records may be disclosed, as a routine use, to the Administrator, General Services, or his/her designee, during an inspection of records conducted by GSA as part of that agency's responsibility to recommend improvements in records management practices and programs, under authority of 44 U.S.C. 2904 and 2906. Such disclosure shall be made in accordance with the GSA regulations governing inspection of records for this purpose, and any other relevant (*i.e.*, GSA or Commerce) directive. Such disclosure shall not be used to make determinations about individuals.
8. A record from this system of records may be disclosed, as a routine use, to the public after either publication of the application pursuant to 35 U.S.C. 122(b) or issuance of a patent pursuant to 35 U.S.C. 151. Further, a record may be disclosed, subject to the limitations of 37 CFR 1.14, as a routine use, to the public if the record was filed in an application which became abandoned or in which the proceedings were terminated and which application is referenced by either a published application, an application open to public inspection or an issued patent.
9. A record from this system of records may be disclosed, as a routine use, to a Federal, State, or local law enforcement agency, if the USPTO becomes aware of a violation or potential violation of law or regulation.

【CLAIMS】

1. A printed circuit board (PCB) comprising:

a first ground layer extended in one direction;

a first dielectric layer laminated on the first ground layer and extended in the same direction as that of the first ground;

a signal transmission line laminated on the first dielectric layer and extended in the same direction as that of the first dielectric layer; and

a plurality of first ground patterns formed by etching a surface of the first ground layer in an axial direction thereof at a predetermined interval in a line,

wherein the plurality of first ground patterns expose the first dielectric layer.

2. The PCB of claim 1, further comprising:

a bonding sheet disposed on the signal transmission line;

a second dielectric layer disposed on the bonding sheet;

a second ground layer disposed on the second dielectric layer; and

a plurality of second ground patterns formed by etching a surface of the second ground layer in an axial direction thereof at a predetermined interval in a line,

wherein the plurality of second ground patterns expose the second dielectric layer.

3. The PCB of claim 1 or 2, wherein the plurality of first ground patterns and the plurality of second ground patterns are formed along a center in the axial directions of the first ground layer and the second ground layer.

4. A PCB comprising:

a first ground layer extended in one direction;

a first dielectric layer laminated one the first ground layer and extended in the same direction as that of the first ground layer;

a signal transmission line laminated on the first dielectric layer and extended in the same direction as that of the first dielectric layer;

a first ground pattern formed by etching a surface of the first ground layer in an axial direction thereof with a predetermined width; and

a plurality of second ground patterns formed by etching the surface of the first ground layer at both sides of the first ground pattern in the axial direction at a predetermined interval in a line,

wherein a part of each of the plurality of second ground patterns, far from the first ground pattern, has a greater width than that of another part thereof, close to the first ground pattern, and

the first ground pattern and the plurality of second ground patterns expose the first dielectric layer.

5. The PCB of claim 4, further comprising:

a bonding sheet disposed on the signal transmission line;

a second dielectric layer disposed on the bonding sheet;

a second ground layer disposed on the second dielectric layer;

a third ground pattern formed by etching a surface of the second ground layer in an axial direction thereof with a predetermined width; and

a plurality of fourth ground patterns formed by etching the surface of second ground layer at both sides of the third ground pattern in the axial direction at a predetermined interval in a line,

wherein the third ground pattern and the plurality of fourth ground patterns expose the second dielectric layer.

6. The PCB of claim 4 or 5, wherein the first ground pattern and the third ground pattern comprise one or more of bridges, not etched, formed along a center of the first and third ground patterns in the axial direction thereof at a predetermined interval in a line and electrically connecting parts of the both sides of the first and third ground patterns, which are not etched.

7. A PCB comprising:

a first ground layer extended in one direction;

a first dielectric layer laminated on the first ground layer and extended in an axial direction of the first ground layer;

a signal transmission line laminated on the first dielectric layer and extended in an axial direction of the first dielectric layer;

a plurality of first ground patterns formed by etching a surface of the first ground layer in an axial direction thereof at a predetermined interval in a line; and

a plurality of second ground patterns formed by etching the surface of the first ground layer at both sides of the plurality of first ground patterns at a predetermined interval in a line,

wherein, when further from a center of the first ground layer, the width of each of the plurality of second ground patterns increases, which is measured in the axial direction of the first ground layer, and

the plurality of first and second ground patterns expose the first dielectric layer.

8. The PCB of claim 7, further comprising:

a bonding sheet disposed on the signal transmission line;

a second dielectric layer disposed on the bonding sheet;

a second ground layer disposed on the second dielectric layer;

a plurality of third ground patterns formed by etching a surface of the second ground layer in an axial direction thereof at a predetermined interval in a line; and

a plurality of fourth ground patterns formed by etching the surface of the second ground layer at both sides of the plurality of third ground patterns in the axial direction of the second ground layer at a predetermined interval in a line,

wherein, when further from a center from the second ground layer, the width of each of the plurality of fourth ground patterns increases, which is measured in the axial direction of the second ground layer, and

the plurality of third and fourth ground patterns expose the second dielectric layer.

9. The PCB of claim 7 or 8, wherein the plurality of first and third ground patterns are formed along the center in the axial directions of the first and second ground layers.

10. A PCB comprising:

a first ground layer extended in one direction;

a first dielectric layer laminated on the first ground layer and extended in an axial direction of the first ground layer;

a signal transmission line laminated on the first dielectric layer and extended in an axial direction of the first dielectric layer;

a plurality of first ground patterns formed by etching a surface of the first ground layer in an axial direction thereof at a predetermined interval in a line; and

a plurality of second ground patterns formed by etching the surface of the first ground layer at both sides of the plurality of first ground patterns at a predetermined interval in a line,

wherein, when further from a center of the first ground layer, the width of each of the plurality of second ground patterns increases and then becomes uniform, which is measured in the axial direction of the first ground layer, and

the plurality of first and second ground patterns expose the first dielectric layer.

11. The PCB of claim 10, further comprising:

a bonding sheet disposed on the signal transmission line;

a second dielectric layer disposed on the bonding sheet;

a second ground layer disposed on the second dielectric layer;

a plurality of third ground patterns formed by etching a surface of the second ground layer in an axial direction thereof at a predetermined interval in a line; and

a plurality of fourth ground patterns formed by etching the surface of the second ground layer at both sides of the plurality of third ground patterns at a predetermined interval in a line,

wherein, when further from a center of the second ground layer, the width of each of the plurality of fourth ground patterns increases and then becomes uniform, which is measured in the axial direction of the second ground layer, and

the plurality of third and fourth ground patterns expose the second dielectric layer.

12. The PCB of claim 10 or 11, wherein, on the basis of the center on the axial directions of the first and second ground layers, a position where the width of the each of the plurality of second and fourth ground patterns becomes uniform is located outside of an edge of the signal transmission line.

13. A PCB in which a signal transmission line is formed in a single body with a contactor formed on an end of the signal transmission line and having a width greater than that of the signal transmission line, comprising a cover layer covering the whole surface where the signal transmission line is formed,

wherein the cover layer comprises a hole exposing the contactor, excluding a part of the contactor, which is close to the signal transmission line.

14. The PCB of claim 13, wherein the signal transmission line further comprises a branch connected to a center of the signal transmission line and projected from the center of the signal transmission line in a direction opposite to that in which the signal transmission line is extended,

wherein the branch is projected from one or more sides of the signal transmission line.

15. The PCB of claim 14, wherein the branch is projected with an angle perpendicular to the direction in which the signal transmission layer is extended, or smaller than a right angle.

16. The PCB according to anyone of claims 1, 4, 7, 10, and 13, which is a flexible PCB.

UNITED STATES PATENT AND TRADEMARK OFFICE

UNITED STATES DEPARTMENT OF COMMERCE
United States Patent and Trademark Office
Address: COMMISSIONER FOR PATENTS
P.O. Box 1450
Alexandria, Virginia 22313-1450
www.uspto.gov

APPLICATION NO.	FILING DATE	FIRST NAMED INVENTOR	ATTORNEY DOCKET NO.	CONFIRMATION NO.
12/866,981	08/10/2010	Yong Goo Lee	15138-000015/US/NP	6364

28997 7590 12/02/2010
HARNESS, DICKEY, & PIERCE, P.L.C
7700 Bonhomme, Suite 400
ST. LOUIS, MO 63105

EXAMINER

ART UNIT	PAPER NUMBER
2841	

MAIL DATE	DELIVERY MODE
12/02/2010	PAPER

Please find below and/or attached an Office communication concerning this application or proceeding.

The time period for reply, if any, is set in the attached communication.

UNITED STATES PATENT AND TRADEMARK OFFICE

Commissioner for Patents
United States Patent and Trademark Office
P.O. Box 1450
Alexandria, VA 22313-1450
www.uspto.gov

HARNESS, DICKEY, & PIERCE, P.L.C
7700 Bonhomme, Suite 400
ST. LOUIS MO 63105

In re Application of	**: DECISION ON REQUEST TO**
Lee et al.	**: PARTICIPATE IN THE PCT PATENT**
Application No.: 12/866,981	**: PROSECUTION HIGHWAY PILOT**
Filed: 10 August 2010	**: PROGRAM AND PETITION**
Attorney Docket No.: 15138-000015/US/NP	**: TO MAKE SPECIAL UNDER**
For: PRINTED CIRCUIT BOARD	**: 37 CFR 1.102(d)**

This is a decision on the request to participate in the PCT Patent Prosecution Highway (PCT-PPH) pilot program and the petition under 37 CFR 1.102(a), filed 10 August 2010, to make the above-identified application special.

The request and petition are **DISMISSED**.

Discussion

A grantable request to participate in the PCT-PPH pilot program and petition to make special require:

(1) The U.S. application must have an eligible relationship to one or more PCT applications where the ISA or IPEA are the JPO, EPO, KIPO, or USPTO;

(2) At least one claim in the PCT application has novelty, inventive step, and industrial applicability and must be free of any observations in Box VIII in the latest work product in the international stage or applicant must identify and explain why the claim(s) is/are not subject to the observation in Box VIII;

(3) Applicant must submit a copy of the claim(s) from the PCT application(s) that have novelty, inventive step, and industrial applicability along with an English translation thereof and a statement that the English translation is accurate, if the claims are not in the English language;

(4) All the claims in the U.S. application must sufficiently correspond or be amended to sufficiently correspond to the claim(s) that have novelty, inventive step, and industrial applicability in the PCT application(s);

(5) Examination of the U.S. application has not begun;

(6) Applicant must submit a copy of the latest international work product from the PCT application indicating that the claim(s) have novelty, inventive step, and industrial applicability along with an English translation thereof and a statement that the English translation is accurate if the latest international work product is not in the English language;

(7) Applicant must submit an IDS listing the documents cited by the PCT examiner in the international work product along with copies of documents except U.S. patents or U.S. patent application publications.

Conditions (1-5) and (7) above are considered to have been met. However, the request to participate in the PPH pilot program and petition fails meet condition (6).

Regarding the requirement of condition (6), applicant has failed submit a copy of the ISA/237.

Applicant is given **ONE** opportunity within a time period of **ONE MONTH or THIRTY DAYS**, whichever is longer, from the mailing date of this decision to correct the deficiencies. **NO EXTENSION OF TIME UNDER 37 CFR 1.136 IS PERMITTED.** If the deficiencies are not corrected with the time period given, the application will await action in its regular turn.

Response must be filed via the Electronic Filing System (EFS) with the Document Code PPH.PCT.652. Any preliminary amendments and IDS submitted with the PPH documents must be separately indexed as a preliminary amendment and IDS, respectively.

Telephone inquiries concerning this decision should be directed to Lee W. Young at 571-272-4549.

All other inquiries concerning the examination or status of the application is accessible in the PAIR system at http://www.uspto.gov/ebc/index.html.

Lee W. Young
TQAS Technology Center 2800 - Semiconductors,
Electrical & Optical Systems & Components

PATENT

IN THE UNITED STATES PATENT AND TRADEMARK OFFICE

Application No.:	12/866,981
Filing Date:	August 10, 2010
Applicant:	Yong Goo LEE, *et al.*
Group Art Unit:	2841
Examiner:	Unknown
Confirmation No.:	6364
Title:	Printed Circuit Board
Attorney Docket:	15138-000015/US/NP

SUBMITTED ELECTRONICALLY VIA EFS -WEB

Commissioner for Patents
P.O. Box 1450
Alexandria, Virginia 22313-1450

RESPONSE TO DECISION ON REQUEST TO PARTICIPATE IN THE PCT PATENT PROSECUTION HIGHWAY PILOT PROGRAM AND PETITION TO MAKE SPECIAL UNDER 37 CFR 1.102(d)

Dear Sir:

On December 2, 2010, the USPTO dismissed Applicant's Petition and Request to Participate in the PCT Patent Prosecution Highway Pilot Program dated August 10, 2010 on the grounds that the Petition fails to provide a copy of ISA/237 form that indicates at least one claim in the PCT application has novelty, inventive step and industrial applicability, as required.

Applicant submits herewith a copy of the PCT Written Opinion of the International Searching Authority (Form PCT/ISA/237) in PCT Application No. PCT/KR2008/006897. The Written Opinion clearly indicated that Claims 1-12 and 14-16 meet the requirements of PCT Article 33(2) and (3) with respect to novelty and inventive step, and the claims are industrially applicable under PCT Article 33(4). Accordingly, the U.S. Application No. 12/866,981 is believed to have met all the requirements necessary to be eligible to participate in the PCT-PPH pilot program. Therefore, Applicant respectfully requests approval of the request for the PCT Patent Prosecution Highway Pilot Program for U.S. Patent Application 12/866,981.

It is believed that no fees are due in connection with this response. If, however, Applicants owed any fee(s), the Commissioner is hereby authorized to charge such fee(s) to Deposit Account No. **08-0750**.

Respectfully submitted,

Dated: December 8, 2010

By: /Kisuk Lee/
Kisuk Lee, Reg. No. 66,861

HARNESS, DICKEY & PIERCE, P.L.C.
7700 Bonhomme, Ste. 400
St. Louis, MO 63105
(314) 446-7670 (direct)
(314) 726-7501 (facsimile)

Attachment:
A copy of the PCT Written Opinion of the International Searching Authority in PCT Application No. PCT/KR2008/006897

PATENT COOPERATION TREATY

From the
INTERNATIONAL SEARCHING AUTHORITY

To:
YOON Jae Seung

1306. G-Well Tower 1678-4. Seocho-dong Seocho-gu Seoul
137-881 Republic of Korea

PCT

WRITTEN OPINION OF THE INTERNATIONAL SEARCHING AUTHORITY

(PCT Rule 43bis.1)

Date of mailing *(day/month/year)*	**15 JUNE 2009 (15.06.2009)**
Applicant's or agent's file reference PCT080034	**FOR FURTHER ACTION** See paragraph 2 below

International application No.	International filing date *(day/month/year)*	Priority date *(day/month/year)*
PCT/KR2008/006897	**21 NOVEMBER 2008 (21.11.2008)**	15 FEBRUARY 2008 (15.02.2008)

International Patent Classification (IPC) or both national classification and IPC

H05K 1/02(2006.01)i

Applicant

Gigalane Co.LTD et al

1. This opinion contains indications relating to the following items:

- [x] Box No. I Basis of the opinion
- [ ] Box No. II Priority
- [ ] Box No. III Non-establishment of opinion with regard to novelty, inventive step and industrial applicability
- [x] Box No. IV Lack of unity of invention
- [x] Box No. V Reasoned statement under Rule 43bis.1(a)(i) with regard to novelty, inventive step or industrial applicability; citations and explanations supporting such statement
- [ ] Box No. VI Certain documents cited
- [ ] Box No. VII Certain defects in the international application
- [ ] Box No. VIII Certain observations on the international application

2. **FURTHER ACTION**
If a demand for international preliminary examination is made, this opinion will be considered to be a written opinion of the International Preliminary Examining Authority ("IPEA") except that this does not apply where the applicant chooses an Authority other than this one to be the IPEA and the chosen IPEA has notified the International Bureau under Rule 66.1bis(b) that written opinions of this International Searching Authority will not be so considered.

If this opinion is, as provided above, considered to be a written opinion of the IPEA, the applicant is invited to submit to the IPEA a written reply together, where appropriate, with amendments, before the expiration of 3 months from the date of mailing of Form PCT/ISA/220 or before the expiration of 22 months from the priority date, whichever expires later.
For further options, see Form PCT/ISA/220.

3. For further details, see notes to Form PCT/ISA/220.

Name and mailing address of the ISA/KR	Date of completion of this opinion	Authorized officer
Korean Intellectual Property Office Government Complex-Daejeon, 139 Seonsa-ro, Seo-gu, Daejeon 302-701, Republic of Korea Facsimile No. 82-42-472-7140	15 JUNE 2009 (15.06.2009)	LEE , Beak Su Telephone No.82-42-481-8476

WRITTEN OPINION OF THE INTERNATIONAL SEARCHING AUTHORITY

International application No.
PCT/KR2008/006897

Box No. I Basis of this opinion

1. With regard to the **language**, this opinion has been established on the basis of :

   ☒ the international application in the language in which it was filed

   ☐ a translation of the international application into _____ , which is the language of a translation furnished for the purposes of international search (Rules 12.3(a) and 23.1(b))

2. ☐ This opinion has been established taking into account the **rectification of an obvious mistake** authorized by or notified to this Authority under Rule 91 (Rule 43*bis*.1(a))

3. With regard to any **nucleotide and/or amino acid sequence** disclosed in the international application, this opinion has been established on the basis of:

   a. type of material
   - ☐ a sequence listing
   - ☐ table(s) related to the sequence listing

   b. format of material
   - ☐ on paper
   - ☐ in electronic form

   c. time of filing/furnishing
   - ☐ contained in the international application as filed.
   - ☐ filed together with the international application in electronic form.
   - ☐ furnished subsequently to this Authority for the purposes of search.

4. ☐ In addition, in the case that more than one version or copy of a sequence listing and/or table relating thereto has been filed or furnished, the required statements that the information in the subsequent or additioanl copies is identical to that in the application as filed or does not go beyond the application as filed, as appropriate, were furnished.

5. Additional comments:

WRITTEN OPINION OF THE INTERNATIONAL SEARCHING AUTHORITY

International application No.
PCT/KR2008/006897

Box No. IV Lack of unity of invention

1. ☐ In response to the invitation (Form PCT/ISA/206) to pay additional fees the applicant has, within the applicable time limit:
   - ☐ paid additional fees
   - ☐ paid additional fees under protest and, where applicable, the protest fee
   - ☐ paid additional fees under protest but the applicable protest fee was not paid
   - ☐ not paid additional fees
2. ☒ This Authority found that the requirement of unity of invention is not complied with and chose not to invite the applicant to pay additional fees.
3. This Authority considers that the requirement of unity of invention in accordance with Rule 13.1, 13.2 and 13.3 is
   - ☐ complied with
   - ☒ not complied with for the following reasons:

Group 1(Claims 1-12) relates to a printed circuit board comprising a first ground layer, a first dielectric layer, a signal transmission line, and a plurality of first ground patterns (and a plurality of second ground patterns).

Group 2 (Claims 13-16) relates to a PCB comprising a signal transmission line, a contactor formed a width greater than that of the signal transmission line, and a cover layer having a hole exposing the contactor.

The inventions listed as Group 1 and Group 2 do not relate to a single inventive concept under PCT Rule 13.1 because they lack the same or corresponding special technical features in the sense of PCT Rule 13.2.

4. Consequently, this opinion has been established in respect of the following parts of the international application :
   - ☒ all parts.
   - ☐ the parts relating to claims Nos. _____

WRITTEN OPINION OF THE INTERNATIONAL SEARCHING AUTHORITY

International application No.
PCT/KR2008/006897

Box No. V Reasoned statement under Rule 43bis.1(a)(i) with regard to novelty, inventive step or industrial applicability; citations and explanations supporting such statement

1. Statement

Novelty (N)	Claims	1-12, 14-16	YES
	Claims	13	NO
Inventive step (IS)	Claims	1-12, 14-16	YES
	Claims	13	NO
Industrial applicability (IA)	Claims	1-16	YES
	Claims	NONE	NO

2. Citations and explanations :

Reference is made to the following documents :
D1 : US 5252781 A (IBM CORPORATION) 12 October 1993

1. Novelty and Inventive Step

1-1. Independent Claim 13

D1 discloses a substrate member comprising a substrate, electric lines formed with pad constructing portions whose widths are wider than those of the other portion lines, and an insulating film having a plurality of openings as shown in figure 1.

Therefore, each element limited in claim 13 of the present application corresponds to each other disclosed in figure 1 of D1. Accordingly, the subject matter of claim 13 of the present application lacks an novelty (Article 33(2) PCT).

2. Industrial Applicability

Claims 1-16 of the present application meet the criteria set out in PCT Article 33(4) because they provide the method for increasing the width of a signal transmission line without impedance mismatching and preventing a disconnect of a signal transmission line though the PCB is bent. Therefore, the subject matters of claims 1-16 are considered to be industrially applicable.

UNITED STATES PATENT AND TRADEMARK OFFICE

Commissioner for Patents
United States Patent and Trademark Office
P.O. Box 1450
Alexandria, VA 22313-1450
www.uspto.gov

23363
CHRISTIE, PARKER & HALE, LLP
P.O. Box 7068
Pasadena, CA 91109-7068

MAILED
MAY 25 2011
PCT LEGAL ADMINISTRATION

In re Application of
RAMPLING *et al*
U.S. Application No.: 12/867,015
PCT No.: PCT/GB2009/000374
Int. Filing Date: 10 February 2009
Priority Date: 12 February 2008
Attorney Docket No.: 65977/S307
For: CUTTING TOOLS

DECISION

This decision is in response to applicants' petition under 37 CFR 1.47(a) filed 15 October 2010.

BACKGROUND

On 01 October 2010, a Notification of Missing Requirements (Form PCT/DO/EO/905) was mailed requesting an oath or declaration in compliance with 37 CFR 1.497(a) and (b). Applicants were given two months to respond with extensions of time available under 37 CFR 1.136(a).

On 15 October 2010, applicants filed the subject petition which was accompanied by, *inter alia*, a $200.00 petition fee; a declaration signed on behalf of the nonsigning inventor; a declaration of Margaret Butler; and documentary evidence in support of the petition (Exhibit A - B).

DISCUSSION

Applicants claim that co-inventor, Laurence FIDLER, refuses to cooperate and have filed the subject petition under 37 CFR 1.47(a).

A petition under 37 CFR 1.47(a) requires: (1) the petition fee; (2) factual proof that the missing joint inventor cannot be located or refuses to cooperate; (3) a statement of the last known address of the nonsigning joint inventor; (4) and an oath or declaration executed by the signing joint inventors on their behalf and on behalf of the nonsigning joint inventor.

Applicants submitted a $200.00 petition fee. The last known address of the nonsigning inventor is listed in the petition. A declaration signed by two of the three named inventors was provided. This declaration complies with 37 CFR 1.497(a) and (b) and satisfies the requirements of MPEP § 409.03(a)(A).

Therefore, items (1), (3) and (4) of 37 CFR 1.47(a) are satisfied.

Regarding item (2) of 37 CFR 1.47(a), applicants provided a statement of facts by Ms. Butler detailing the steps taken to obtain the cooperation of Mr. FIDLER. Ms. Butler states that she sent a copy of a declaration and an assignment to the nonsigning inventor on 09 August 2010. Mr. FIDLER responded by email on 15 August 2010 stating that he would not cooperate as he never assigned, sold, or gifted his interest in the invention to Scott Cutters Ltd. (Exhibit B). Applicants claim that this action by Mr. FIDLER constitutes a refusal to join in the application.

MPEP § 409.03(d)(II) requires that for a refusal to be accepted, the 37 CFR 1.47(a) applicants must show that a complete copy of the application, including specification, claims and drawings, were presented (or attempted to be presented) to the nonsigning inventor. In this case, the 37 CFR 1.47(a) applicants have not shown that a complete copy of the subject application was provided to Mr. FIDLER. The letter sent to Mr. FIDLER on 09 August 2010 included only a copy of a declaration and assignment.

For this reason, item (2) of 37 CFR 1.47(a) is not yet satisfied.

CONCLUSION

Applicants' petition under 37 CFR 1.47(a) is **DISMISSED** without prejudice.

If reconsideration on the merits of this petition is desired, a proper response must be filed within **TWO (2) MONTHS** from the mail date of this decision. Extensions of time under 37 CFR 1.136(a) are available. **Failure to timely respond will result in the abandonment of the application.**

Any further correspondence may be filed electronically via EFS-Web selecting the document description "Petition for review and processing by the PCT Legal Office" or by mail addressed to Mail Stop PCT, Commissioner for Patents, Office of PCT Legal Administration, P.O. Box 1450, Alexandria, Virginia 22313-1450, with the contents of the letter marked to the attention of the Office of PCT Legal Administration.

James Thomson

James Thomson
Attorney Advisor
Office of PCT Legal Administration

Tel.: (571) 272-3302

UNITED STATES PATENT AND TRADEMARK OFFICE

Commissioner for Patents
United States Patent and Trademark Office
P.O. Box 1450
Alexandria, VA 22313-1450
www.uspto.gov

23363
CHRISTIE, PARKER & HALE, LLP
P.O. Box 7068
Pasadena, CA 91109-7068

MAILED

OCT 13 2011

PCT LEGAL ADMINISTRATION

In re Application of
RAMPLING *et al*
U.S. Application No.: 12/867,015
PCT No.: PCT/GB2009/000374
Int. Filing Date: 10 February 2009
Priority Date: 12 February 2008
Attorney Docket No.: 65977/S307
For: CUTTING TOOLS

DECISION

This decision is in response to applicants' renewed petition under 37 CFR 1.47(a) filed 23 August 2011.

BACKGROUND

On 25 May 2011, a decision dismissing applicants' petition pursuant to 37 CFR 1.47(a) was mailed. Applicants were given two months to respond with extensions of time available.

On 23 August 2011, applicants filed the subject response which was accompanied by, *inter alia*, a one-month extension and $65.00 extension fee, a supplemental declaration of Margaret Butler, a declaration of David A. Plumley, and documentary evidence in support of the petition.

DISCUSSION

Applicants claim that co-inventor, Laurence FIDLER, refuses to cooperate and have filed the subject petition under 37 CFR 1.47(a).

As previously noted, a petition under 37 CFR 1.47(a) requires: (1) the petition fee; (2) factual proof that the missing joint inventor cannot be located or refuse to cooperate; (3) a statement of the last known address of the nonsigning joint inventor; (4) and an oath or declaration executed by the signing joint inventors on their behalf and on behalf of the nonsigning joint inventor.

Items (1), (3) and (4) of 37 CFR 1.47(a) were satisfied in the initial petition.

Item (2) of 37 CFR 1.47(a) was not completed as applicants did not show that a complete copy of the subject application was provided to Mr. FIDLER.

In the renewed petition, applicants have provided a supplemental declaration of Margaret Butler and a declaration of David A. Plumley indicating that a complete copy of the subject application was provided to the counsel (Saunders & Dolleymore LLP) for the nonsigning inventor on 14 June 2011. A copy of the cover letter was provided as an exhibit. Mr. FIDLER responded by email on 27 June 2011 to David Plumley noting that he would not cooperate in the above-captioned application due to a dispute with Scott Cutters UK Ltd. A copy of this email response was also included in the renewed petition.

The email response by Mr. FIDLER dated 27 June 2011 constitutes a written refusal to cooperate as contemplated by MPEP § 409.03(d)(II). Item (2) of 37 CFR 1.47(a) is now satisfied.

All items of 37 CFR 1.47(a) are now satisfied.

CONCLUSION

Applicants' renewed petition under 37 CFR 1.47(a) is hereby **GRANTED**.

Applicants have completed the requirements for acceptance under 35 U.S.C. 371(c). The application has an international filing date of 10 February 2009 under 35 U.S.C. 363, and a 35 U.S.C. 371 date of 15 October 2010.

This application is being forwarded to the National Stage Processing Division of the Office of PCT Operations for continued processing

James Thomson

James Thomson
Attorney Advisor
Office of PCT Legal Administration

Tel.: (571) 272-3302

UNITED STATES PATENT AND TRADEMARK OFFICE

Commissioner for Patents
United States Patent and Trademark Office
P.O. Box 1450
Alexandria, VA 22313-1450
www.uspto.gov

Laurence Fidler
2 Knightswood Road
Rainham
Essex RM13 8SE
United Kingdom

MAILED
OCT 13 2011
PCT LEGAL ADMINISTRATION

In re Application of
RAMPLING *et al*
U.S. Application No.: 12/867,015
PCT No.: PCT/GB2009/000374
Int. Filing Date: 10 February 2009
Priority Date: 12 February 2008
Attorney Docket No.: 65977/S307
For: CUTTING TOOLS

Dear Mr. Fidler:

You are named as an inventor in the above-captioned United States national stage application, filed under the provisions of 37 CFR 1.47(a) and 35 U.S.C. 116. Should a patent be granted, you will be designated as an inventor.

As a named inventor, you are entitled to inspect any paper in the file wrapper of the application, order copies of all or any part thereof (at a prepaid cost per 37 CFR 1.19) or to make your position of record in the application. Alternatively, you may arrange to do any of the preceding through a registered patent agent or attorney presenting written authorization from you. The counsel for the applicant is listed below. Joining in the application would entail the filing of an appropriate oath or declaration by you pursuant to 37 CFR 1.63.

James Thomson
Attorney Advisor
Office of PCT Legal Administration

Tel.: (571) 272-3302

CHRISTIE, PARKER & HALE, LLP
P.O. Box 7068
Pasadena, CA 91109-7068

UNITED STATES PATENT AND TRADEMARK OFFICE

Commissioner for Patents
United States Patent and Trademark Office
P.O. Box 1450
Alexandria, VA 22313-1450
www.uspto.gov

FAY SHARPE/LUCENT
1228 Euclid Avenue, 5th Floor
The Halle Building
Cleveland OH 44115-1843

MAILED

MAR 22 2011

PCT LEGAL ADMINISTRATION

In re Application of
SOULIE, et al.
U.S. Application No.: 12/867,017
PCT No.: PCT/FR2009/050167
Int. Filing Date: 04 February 2009
Priority Date: 21 February 2008
Attorney Docket No.: LUTZ 201175US01
For: ESTABLISHMENT OF A PACKET COMMUNICATION BETWEEN A SERVER AND A SERVICE ENTITY OF A RADIOCOMMUNICATION NETWORK

DECISION ON PETITION

UNDER 37 CFR 1.47(a)

This decision is in response to applicant's "Petition Under 37 CFR 1.47" filed 28 February 2011 in the United States Patent and Trademark Office (USPTO).

BACKGROUND

On 04 February 2009, applicant filed international application PCT/FR2009/050167 which claimed priority to an earlier application filed 21 February 2008. A copy of the international application was transmitted to the United States on 27 August 2009. Pursuant to 37 CFR 1.495 the period for providing payment of the full, U.S. Basic National Fee was set to expire thirty months from the priority date, or midnight 21 August 2010.

On 10 August 2010, applicant filed a transmittal letter for entry into the national stage in the United States accompanied by among other items, payment of the requisite basic national fee and an English translation of the international application as filed.

On 01 October 2010, applicant was mailed a "NOTIFICATION OF MISSING REQUIREMENTS UNDER 35 U.S.C. 371" (Form PCT/DO/EO/905) informing applicant of the need to provide an oath or declaration of the inventors, in compliance with 37 CFR 1.497(a) and (b), identifying the application by the international application number and international filing date. Applicant was afforded two months to file the proper reply and informed that this period could be extended pursuant to 37 CFR 1.136(a).

On 28 February 2011, applicant filed the present petition under 37 CFR 1.47(a) accompanied by a petition for a three-month extension of time and payment of the appropriate extension of time fee. The petition is considered timely filed.

DISCUSSION

A petition under 37 CFR 1.47(a) must be accompanied by (1) the fee under 37 CFR 1.17(g), (2) factual proof that the missing joint investor refuses to execute the application or cannot be reached after diligent effort, (3) a statement of the last known address of the missing inventor, and (4) an oath or declaration by each 37 CFR 1.47(a) applicant on his or her own behalf and on behalf of the non-signing joint inventor. Applicant has satisfied all four items and it is therefore proper to grant applicant's petition at this time.

CONCLUSION

For the reasons above, applicant's petition under 37 CFR 1.47(a) is **GRANTED**.

The application has an international filing date of 04 February 2009 under 35 U.S.C. 363, and will be given a date of **28 February 2011** under 35 U.S.C. 371(c)(1), (c)(2) and (c)(4).

As provided in 37 CFR 1.47(c), a notice of the filing of this application will be forwarded to the non-signing inventor at his last known address of record. A notice of the filing of the application under 37 CFR 1.47(a) will be published in the Official Gazette.

This application is being returned to the DO/EO/US for processing in accordance with this decision. Specifically, the mailing of a Notification of Acceptance (Form PCT/DO/EO/903).

Derek A. Putonen
Attorney Advisor
Office of PCT Legal Administration
Tel: (571) 272-3294

UNITED STATES PATENT AND TRADEMARK OFFICE

Commissioner for Patents
United States Patent and Trademark Office
P.O. Box 1450
Alexandria, VA 22313-1450
www.uspto.gov

Mr. Antoine Soulie
19 avenue du General Leclerc
75014 Paris
FRANCE

MAILED

MAR 22 2011

PCT LEGAL ADMINISTRATION

In re Application of
SOULIE, et al.
Serial No.: 12/867,017
PCT No.: PCT/FR2009/050167
Int. Filing Date: 04 February 2009
Priority Date: 21 February 2008
Atty Docket No.: LUTZ 201175US01
For: ESTABLISHMENT OF A PACKET COMMUNICATION BETWEEN A SERVER AND A SERVICE ENTITY OF A RADIOCOMMUNICATION NETWORK

Dear Mr. Soulie:

You are named as an inventor in the above identified United States patent application, filed under the provisions of 37 CFR 1.47(a) and 35 U.S.C. 116. Should a patent be granted, you will be designated as an inventor. As a named inventor, you are entitled to inspect any paper in the file wrapper of the application, order copies of all or any part thereof (at a prepaid cost per 37 CFR 1.19) or to make your position of record in the application. Alternately, you may arrange to do any of the preceding through a registered patent agent or attorney presenting written authorization from you. If you care to join in the application, the law firm of record (see below) would presumably assist you. Joining in the application would entail the filing of the appropriate oath or declaration by you pursuant to 37 CFR 1.63.

Derek A. Putonen
Attorney Advisor
Office of PCT Legal Administration
Tel: (571) 272-3294

Counsel of record:
FAY SHARPE/LUCENT
1228 Euclid Avenue, 5th Floor
The Halle Building
Cleveland OH 44115-1843
UNITED STATES OF AMERICA

MAILED

OCT 13 2010

PCT LEGAL ADMINISTRATION

United States Patent and Trademark Office

Commissioner for Patents
United States Patent and Trademark Office
P.O. Box 1450
Alexandria, VA 22313-1450
www.uspto.gov

HEWLETT-PACKARD COMPANY
Intellectual Property Administration
3404 E. Harmony Road
Mail Stop 35
FORT COLLINS CO 80528

In re Application of Pathak et al. Application No.: 12/867,046 PCT No.: PCT/IN2008/000074 Int. Filing Date: 06 February 2008 Priority Date: 06 February 2008 Attorney Docket No.: 200702857-2 For: Chassis Button To Activate Graphical User Interface To Enable User To Select Diagnostic And/Or Recover	DECISION ON PETITION

The petition to revive under 37 CFR 1.137(b) filed on 10 August 2010 in the above-captioned application is hereby **GRANTED** as follows:

Petitioner states that "the entire delay in filing the required reply from the due date for the required reply until the filing of a grantable petition under 37 C.F.R. 1.137(b) was unintentional." Said statement is being accepted in satisfaction of 37 CFR 1.137(b)(3).

A review of the application file reveals that applicant has authorized charging the petition fee and the basic national fee (required reply) to a Deposit Account. No terminal disclaimer is required. Therefore, the request to revive the application abandoned under 35 U.S.C. 371(d) is granted as to the national stage in the United States of America.

The Notification of Abandonment indicated that applicant "has failed to provide the Copy of the International Application by 30 months," but the International Bureau transmitted a copy of the published international application to the USPTO on 13 August 2009.

This application is being returned to the Office of Patent Application Processing for further processing,. Its date under 35 U.S.C. 371(c)(1), (2) and (4) is **10 August 2010**.

/George Dombroske/
George Dombroske
PCT Legal Examiner
Office of PCT Legal Administration
Tel: (571) 272-3283

CERTIFICATE OF EFS FILING UNDER 37 CFR §1.8

I hereby certify that this correspondence is being electronically transmitted to the United States Patent and Trademark Office, Commissioner for Patents, via the EFS pursuant to 37 CFR §1.8 on the below date:

Date: September 8, 2010 Name: Jason W. Schigelone - Reg. No. 56,243 Signature: /Jason W. Schigelone/

IN THE UNITED STATES PATENT AND TRADEMARK OFFICE

In re Appln. of:	Christiansen *et al.*	
Appln. No.:	12/867,101	Examiner: TBD
Filed:	August 11, 2010 / February 11, 2009 (I.A. Filing Date)	Group Art Unit No.: TBD
For:	PROSTHESIS COUPLING DEVICE AND METHOD	Confirmation No.: 7610
Attorney Docket No.: 12730/623 (PA-6375-PCT/US)		

REQUEST FOR PARTICIPATION IN THE PATENT COOPERATION TREATY – PATENT PROSECUTION HIGHWAY PILOT PROGRAM BETWEEN THE EUROPEAN PATENT OFFICE AND THE USPTO

Commissioner for Patents
PO Box 1450
Alexandria, VA 22313-1450

Dear Sir:

Enclosed please find a copy of a petition/request for participation in the PCT-PPH Pilot Program between the EPO and the USPTO. Applicants have calculated no fee due, however the Commissioner is hereby authorized to charge any deficiencies in fees to Deposit Account 23-1925.

Respectfully submitted,

Dated: September 8, 2010

/Jason W. Schigelone/
Jason W. Schigelone, Reg. No. 56,243
Attorney for Applicant(s)

BRINKS HOFER GILSON & LIONE
PO BOX 10395
CHICAGO, IL 60610
(312) 321-4200

PTO/SB/20PCT-EP (05-10)
Approved for use through 01/31/2012. OMB 0651-0058
U.S. Patent and Trademark Office; U. S. DEPARTMENT OF COMMERCE
Under the Paperwork Reduction Act of 1995, no persons are required to respond to a collection of information unless it displays a valid OMB control number.

REQUEST FOR PARTICIPATION IN THE PATENT COOPERATION TREATY - PATENT PROSECUTION HIGHWAY (PCT-PPH) PILOT PROGRAM BETWEEN THE EUROPEAN PATENT OFFICE (EPO) AND THE USPTO

Application No:	12/867,101	Filing date:	8/11/2010 (2/11/2009 I.A. Filing Date)
First Named Inventor:	Christiansen		
Title of the Invention:	Prosthesis Coupling Device and Method		

THIS REQUEST FOR PARTICIPATION IN THE PCT-PPH PILOT PROGRAM ALONG WITH THE REQUIRED DOCUMENTS MUST BE SUBMITTED VIA EFS-WEB. INFORMATION REGARDING EFS-WEB IS AVAILABLE AT HTTP://WWW.USPTO.GOV/EBC/EFS_HELP.HTML

APPLICANT HEREBY REQUESTS PARTICIPATION IN THE PCT-PPH PROGRAM AND PETITIONS TO MAKE THE ABOVE-IDENTIFIED APPLICATION SPECIAL UNDER THE PCT-PPH PROGRAM.

The above-identified application is (1) a national stage entry of the corresponding PCT application, or (2) a national stage entry of another PCT application which claims priority to the corresponding PCT application, or (3) a national application that claims domestic/ foreign priority to the corresponding PCT application, or (4) a national application which forms the basis for the priority claim in the corresponding PCT application, or (5) a continuing application of a U.S. application that satisfies one of (1) to (4) above, or (6) a U.S. application that claims domestic benefit to a U.S. provisional application which forms the basis for the priority claim in the corresponding PCT application.

The corresponding PCT application number(s) is/are: PCT/US09/00869

The international date of the corresponding PCT application(s) is/are: 02/11/2009

I. List of Required Documents:

a. **A copy of the latest international work product (WO/ISA, WO/IPEA, or IPER) in the above–identified corresponding PCT application(s)**

☐ Is attached

☑ Is not attached because the document is already in the U.S. application.

b. **A copy of all claims which were indicated as having novelty, inventive step and industrial applicability in the above-identified corresponding PCT application(s).**

☐ Is attached.

☑ Is not attached because the document is already in the U.S. application.

c. **English translations of the documents in a. and b. above are attached (if the documents are not in the English language). A statement that the English translation is accurate is attached for the document in b. above.**

This collection of information is required by 35 U.S.C. 119, 37 CFR 1.55, and 37 CFR 1.102(d). The information is required to obtain or retain a benefit by the public, which is to file (and by the USPTO to process) an application. Confidentiality is governed by 35 U.S.C. 122 and 37 CFR 1.11 and 1.14. This collection is estimated to take 2 hours to complete, including gathering, preparing, and submitting the completed application form to the USPTO. Time will vary depending upon the individual case. Any comments on the amount of time you require to complete this form and/or suggestions for reducing this burden should be sent to the Chief Information Officer, U.S. Patent and Trademark Office, U.S. Department of Commerce, P.O. Box 1450, Alexandria, VA 22313-1450. DO NOT SEND FEES OR COMPLETED FORMS TO THIS ADDRESS.

Approved for use through 01/31/2012. OMB 0651-0058
U.S.Patent and Trademark Office; U.S. DEPARTMENT OF COMMERCE

Under the Paperwork Reduction Act of 1995, no persons are required to respond to a collection of information unless it displays a valid OMB control number.

REQUEST FOR PARTICIPATION IN THE PCT-PPH PILOT PROGRAM BETWEEN THE EPO AND THE USPTO

(continued)

Application No.:	12/867,101
First Named Inventor:	Christiansen

d. **(1) An information disclosure statement listing the documents cited in the international work products (ISR, WO/ISA, WO/IPEA, IPER) of the corresponding PCT application.**

☐ Is attached

☑ Has already been filed in the above-identified U.S. application on August 11, 2010

(2) Copies of all documents (except) for U.S. patents or U.S. patent application publications)

☐ Are attached.

☑ Have already been filed in the above-identified U.S. application on August 11, 2010

II. Claims Correspondence Table:

Claims in US Application	Patentable Claims in the corresponding PCT Application	Explanation regarding the correspondence
15	1	
16	2	
17, 18	3	
19	4	
22	5	
23	6	
20, 24	7	
21, 25	8	
26	9	
27	10	
28	11	
29	12	
30	13	
31	14	

III. All the claims in the US application sufficiently correspond to the patentable claims in the corresponding PCT application.

Signature /Jason W. Schigelone/	Date September 8, 2010
Name (Print/Typed) Jason W. Schigelone	Registration Number 56,243

UNITED STATES PATENT AND TRADEMARK OFFICE

UNITED STATES DEPARTMENT OF COMMERCE
United States Patent and Trademark Office
Address: COMMISSIONER FOR PATENTS
P.O. Box 1450
Alexandria, Virginia 22313-1450
www.uspto.gov

APPLICATION NO.	FILING DATE	FIRST NAMED INVENTOR	ATTORNEY DOCKET NO.	CONFIRMATION NO.
12/867,101	10/21/2010	Frank K. Christiansen	12730/623 (PA-6375-PCT/US	7610

48003 7590 11/03/2010
BRINKS HOFER GILSON & LIONE/CHICAGO/COOK
PO BOX 10395
CHICAGO, IL 60610

EXAMINER

ART UNIT	PAPER NUMBER

MAIL DATE	DELIVERY MODE
11/03/2010	PAPER

Please find below and/or attached an Office communication concerning this application or proceeding.

The time period for reply, if any, is set in the attached communication.

UNITED STATES PATENT AND TRADEMARK OFFICE

Commissioner for Patents
United States Patent and Trademark Office
P.O. Box 1450
Alexandria, VA 22313-1450
www.uspto.gov

Brinks Hofer Gilson & Lione/Chicago/Cook
P.O. Box 10395
Chicago. IL 60610

In re Application of: CHRISTIANSEN et al.
Application No. 12/867,101
Attorney Docket #: 12730/623(PA-6375 PCT/US
Filed: August 11, 2010
For: **Prosthesis Coupling device and method**

DECISION ON REQUEST TO PARTICIPATE IN PATENT PROSECUTION HIGHWAY PROGRAM AND PETITION TO MAKE SPECIAL UNDER 37 CFR 1.102(a)

This is a decision on the request to participate in the PCT-Patent Prosecution Highway (**PCT-PPH**) program and the petition under 37 CFR 1.102(a), filed September 8, 2010 to make the above- identified application special.

The petition is **GRANTED.**

A grantable request to participate in the PPH program and petition to make special require:

(1) The U.S. application is
(a) a national stage entry of the corresponding PCT application

Or

(b) a national application which forms the basis for the priority claim in the corresponding PCT application

Or

(c) *a* national stage entry of another PCT application (which can be filed in any competent receiving office) which claims priority to the corresponding PCT application

Or

(d) a national application claiming foreign domestic priority to the corresponding PCT application.
Applications subject to a secrecy order (35U.S.C.181) are excluded and not subject to participation in the PCT-PPH pilot program.

Or

(e) a continuing application (continuation, divisional, or continuation-in-part) of the U.S. application which satisfies one of the above (a) to (d) scenarios.

(2) The latest work product in the international phase of the PCT application corresponding to the U.S. application, namely the WO/ISA, or the WO/IPEA, or the IPER, indicates at least one claim in the PCT application has novelty, inventive step and industrial applicability. In case any observation is described in Box VIII of the WO/ISA, or the WO/IPEA, or the IPER which forms the basis for the PCT-PPH request, applicant must identify and explain why the claim(s) is/are not subject to any observation described in Box VIII irrespective of whether an amendment is submitted to correct the observation described in Box VIII. The U.S. application will not be eligible to participate in the PCT-PPH pilot program if applicant does not identify and explain why the claim(s) is/are not subject to the observation described in Box VIII.

Applicant may not file a request to participate in the PCT-PPH pilot program on the basis of an International Search Report (ISR) only.

(3) Applicant must:

a. Ensure all the claims in the U.S. application sufficiently correspond or be amended to sufficiently correspond to one or more of those claims indicated as having novelty, inventive step and industrial applicability and free of any observation described in Box VIII in the latest work product of the corresponding PCT application and

b. Submit a claims correspondence table in English;

The USPTO will accept claims written in dependent form in the U.S. application which are narrower in scope than the claims indicated as having novelty, inventive step and industrial applicability and free of any observation described in Box VIII in the latest work product of the corresponding PCT application.

(4) Substantive Examination of the U.S. application has not begun;

(5) Applicant must submit a copy of:

a. the latest international work product, WO/ISA, or WO/IPEA or PER, which indicated that the claim(s) has/have novelty, inventive step and industrial applicability along with an English translation thereof if the copy of the latest international work product is not in the English language, unless the U.S. application and the corresponding PCT application satisfy the relationship noted in (1)(a) above.

(6) Applicant must submit a copy of:

a. the claims from the corresponding PCT application which were indicated as having novelty, inventive step and industrial applicability in the latest work product of the PCT application,
b. an English translation of the claims and
c. a statement that the English translation is accurate.

If the claims in the U.S. application are identical to the claims from the corresponding PCT application, and are in the English language, applicant may just indicate such in the PCT-PPH request and it will not be necessary for applicant to submit a copy of the claims from the corresponding PCT application.

(7) Applicant must submit:
   a. An IDS listing the documents cited in the work products in the international phase of the PCT application corresponding to the U.S. application, namely the WO/ISA, or the WO/IPEA, or the IPER,(unless already submitted in this application)
   b. Copies of the documents except U.S. patents or U.S. patent application publications (unless already submitted in this application);

The request to participate in the PPH pilot program and petition are found to comply with the above requirements. Accordingly, the above-identified application has been accorded "special" status.

Telephone inquiries concerning this decision should be directed to Mano Padmanabhan at 571-272-4210.

All other inquiries concerning the examination or status of the application is accessible in the PAIR system at http://www.uspto.gov/ebc/index.html.

The application is undergoing pre-examination processing. Once it is released for examination, the application will be forwarded to the examiner for action on the merits commensurate with this decision.

/Mano Padmanabhan/

Mano Padmanabhan
Quality Assurance Specialist, Technology Center 2100, Workgroup 2180
571-272-4210

PTO/SB/20PCT-EP (01-10)
Approved for use through 01/31/2012. OMB 0651-0058
U.S. Patent and Trademark Office; U. S. DEPARTMENT OF COMMERCE
Under the Paperwork Reduction Act of 1995, no persons are required to respond to a collection of information unless it displays a valid OMB control number.

REQUEST FOR PARTICIPATION IN THE PATENT COOPERATION TREATY - PATENT PROSECUTION HIGHWAY (PCT-PPH) PILOT PROGRAM BETWEEN THE EUROPEAN PATENT OFFICE (EPO) AND THE USPTO

Application No:	12/867,114	Filing date:	August 11, 2010
First Named Inventor:	Gerhard Dobusch		
Title of the Invention:	RESIDUAL-CURRENT CIRCUIT BREAKER		

THIS REQUEST FOR PARTICIPATION IN THE PCT-PPH PILOT PROGRAM ALONG WITH THE REQUIRED DOCUMENTS MUST BE SUBMITTED VIA EFS-WEB. INFORMATION REGARDING EFS-WEB IS AVAILABLE AT HTTP://WWW.USPTO.GOV/EBC/EFS_HELP.HTML

APPLICANT HEREBY REQUESTS PARTICIPATION IN THE PCT-PPH PROGRAM AND PETITIONS TO MAKE THE ABOVE-IDENTIFIED APPLICATION SPECIAL UNDER THE PCT-PPH PROGRAM.

The above-identified application is (1) a national stage entry of the corresponding PCT application, or (2) a national stage entry of another PCT application which claims priority to the corresponding PCT application, or (3) a national application that claims domestic/ foreign priority to the corresponding PCT application, or (4) a national application which forms the basis for the priority claim in the corresponding PCT application.

The corresponding PCT application number(s) is/are: PCT/AT2009/000040

The international date of the corresponding PCT application(s) is/are: February 2, 2009

I. List of Required Documents:

a. **A copy of the latest international work product (WO/ISA, WO/IPEA, or IPER) in the above–identified corresponding PCT application(s)**

☑ Is attached

☐ Is not attached because the document is already in the U.S. application.

b. **A copy of all claims which were indicated as having novelty, inventive step and industrial applicability in the above-identified corresponding PCT application(s).**

☑ Is attached.

☐ Is not attached because the document is already in the U.S. application.

c. **English translations of the documents in a. and b. above are attached (if the documents are not in the English language). A statement that the English translation is accurate is attached for the document in b. above.**

d. **(1) An information disclosure statement listing the documents cited in the international work products (ISR, WO/ISA, WO/IPEA, IPER) of the corresponding PCT application.**

☑ Is attached

☐ Has already been filed in the above-identified U.S. application on _____

(2) Copies of all documents (except) for U.S. patents or U.S. patent application publications)

☑ Are attached.

☐ Have already been filed in the above-identified U.S. application on _____

This collection of information is required by 35 U.S.C. 119, 37 CFR 1.55, and 37 CFR 1.102(d). The information is required to obtain or retain a benefit by the public, which is to file (and by the USPTO to process) an application. Confidentiality is governed by 35 U.S.C. 122 and 37 CFR 1.11 and 1.14. This collection is estimated to take 2 hours to complete, including gathering, preparing, and submitting the completed application form to the USPTO. Time will vary depending upon the individual case. Any comments on the amount of time you require to complete this form and/or suggestions for reducing this burden should be sent to the Chief Information Officer, U.S. Patent and Trademark Office, U.S. Department of Commerce, P.O. Box 1450, Alexandria, VA 22313-1450. DO NOT SEND FEES OR COMPLETED FORMS TO THIS ADDRESS.

Approved for use through 01/31/2012. OMB 0651-0058
U.S.Patent and Trademark Office; U.S. DEPARTMENT OF COMMERCE

Under the Paperwork Reduction Act of 1995, no persons are required to respond to a collection of information unless it displays a valid OMB control number.

REQUEST FOR PARTICIPATION IN THE PCT-PPH PILOT PROGRAM BETWEEN THE EPO AND THE USPTO

(continued)

Application No.:	12/867,114
First Named Inventor:	Gerhard Dobusch

II. Claims Correspondence Table:

Claims in US Application	Patentable Claims in the corresponding PCT Application	Explanation regarding the correspondence
6	1	US claim 6 substantially corresponds in scope to PCT claim 1 except for the deletion of reference numbers
7	2	US claim 7 substantially corresponds in scope to PCT claim 2 except for the deletion of reference numbers
8	3	US claim 8 substantially corresponds in scope to PCT claim 3 except for the deletion of reference numbers
9	4	US claim 9 substantially corresponds in scope to PCT claim 4 except for the deletion of reference numbers
10	5	US claim 10 substantially corresponds in scope to PCT claim 5 except for the deletion of reference numbers

III. All the claims in the US application sufficiently correspond to the patentable claims in the corresponding PCT application.

IV. Payment of Fees:

The petition fee under 37 CFR 1.17(h) as required by 37 CFR 1.102(d) must be paid via EFS-Web (using credit card, authorization to charge a deposit account, or electronic funds transfer).

Signature	Date 8-17-2010
Name (Print/Typed) Henry M. Feiereisen	Registration Number 31,084

VERIFICATION OF A TRANSLATION

I, HENRY M. FEIEREISEN, having a place of business at 708 Third Avenue, Suite 1501, New York, N. Y. 10017, depose and state that:

1. I am familiar with the English and German languages.

2. I have read the attached German language International Preliminary Examination Report on Patentability in International application PCT/AT2009/000040.

3. The hereto attached English language text is an accurate translation of the relevant pages.

I hereby declare that all statements made herein of my own knowledge are true and that all statements made on information and belief are believed to be true; and further that these statements were made with the knowledge that willful false statements and the like so made are punishable by fine or imprisonment, or both, under section 1001 of Title 18 of the United States Code and that such wilful false statements may jeopardize the validity of the application or any patent issuing thereon.

Henry M. Feiereisen

Date: August 17, 2010

PATENT COOPERATION TREATY

PCT

International Preliminary Report On Patentability

(Chapter II of the Patent Cooperation Treaty)

Ref.No. of applicant or agent 31335/ab	FURTHER PROCEDURE See form PCT/IPEA/416	
International ref.No. PCT/AT2009/000040	International application date (day/month/year) 02/02/2009	Priority date (day/month/year) 14/02/2008
International patent classification (IPC) or national classification and IPC INV. H01H83/14		
Applicant Moeller Gebäudeautomation GmbH		

1. This report concerns the international preliminary examination report which was produced by the authority charged with the international preliminary examination pursuant to Article 35 and is transmitted to the applicant pursuant to Article 36.

2. This report comprises a total of 5 pages, including this cover page.

3. Moreover, this report comprises ENCLOSURES; they comprise
   a. [X] (sent to the applicant and the international office) a total of 4 pages; these concern:

   [X] Sheets with the description, claims and/or drawings which were amended and are based on this report, and/or sheets with amendments which the authority has approved (see Rule 70.16 and Section 607 of the administrative regulations).

   [ ] Sheets which replace earlier pages which for reasons as stated in field No. 1 subsection 4 and as given in the additional field contain amendments which in the opinion of the authority go beyond the scope of disclosure of the international application in the originally filed version.

   b. [ ] (only sent to the international office) in total (please state type and number of electronic data media) which contains the sequence protocol and/or the associated tables, only in computer-readable form, as stated in the additional field concerning the sequence protocol (see Section 3bis of Annex C of the administrative regulations).

4. This report contains information on the following items:

[X]	Field No. I	Basis of report
[ ]	Field No. II	Priority
[ ]	Field No. III	No preparation of an expert opinion on novelty, inventive step and industrial applicability
[ ]	Field No. IV	Lack of unity of the invention
[X]	Field No. V	Established finding according to Article 35(2) concerning novelty, inventive step and industrial applicability; documents and explanations in support of said finding
[ ]	Field No. VI	Certain specifically mentioned documents
[ ]	Field No. VII	Certain deficiencies in the international application
[ ]	Field No. VIII	Certain notes to the international application

Date of filing of the application 2009-11-03	Date of completion of this report 27.05.2010
Name and postal address of authority charged with the international preliminary examination: European Patent Office D-80298 Munich Tel. +49 89 2399-0 Fax: +49 89 2399 – 4465	Authorized clerk Findell, Luc Phone: +49 89 2399–7636

INTERNATIONAL PRELIMINARY EXAMINATION REPORT ON PATENTABILITY International Ref. No.: PCT/AT2009/000040

Field No. I Basis of report

1. Concerning the **language** this report is based on
   [X] the international application in the language in which the international application was filed.
   [ ] a translation from the original language into the following language which concerns the language of the translation, filed for the following purpose:

   [ ] international research (pursuant to Rules 12.3 and 23.1 (b));

   [ ] the publication language of the international application (pursuant to Rule12.4 a));

   [ ] the international preliminary examination (pursuant to Rule 55.2 a) and/or 55.3 a)).

2. Concerning the **components*** of the international application, the report is based on (*replacement sheets which were presented to the application office upon request pursuant to Article 14 are regarded within the report as "originally filed" and are not appended*):

   Description, pages:

2 to 6	In the version as originally filed
1, 1a	Filed on 03-11-2009 by fax

   Claims, No.:

1 to 5	Filed on 03-11-2009 by fax

   Drawings, sheets:

1/1 to 1/1	In the version as originally filed

   [ ] a sequence protocol and/or associated tables (if any); see additional field concerning the sequence protocol

3. [ ] As a result of the changes, the following documents have been omitted:
   [ ] Description: page
   [ ] Claims:
   [ ] Drawings; page/Fig.
   [ ] Sequence protocol (precise information):
   [ ] Any tables belonging to the sequence protocol (precise information):

4. [ ] This report has been produced without considering (some of) the changes enclosed to this report and listed below because for the stated reasons and in the authority's opinion they go beyond the scope of disclosure of the originally filed version (Rule 70.2 (c)).
   [ ] Description: page
   [ ] Claims: No.
   [ ] Drawings; page/Fig.
   [ ] Sequence protocol (precise information):

5. [ ] This decision was prepared by considering **the amendment of an obvious error** which was approved according to Rule 91 by this authority or was brought to this authority's attention (Rule 70.2 e)).

6. [ ] In the preparation of this report, the supplementary international search report/supplementary international search reports of the following authority/authorities was/were considered (Rule 45bis.8 b) and c)).

Field No. V Established findings pursuant to Article 35(2) concerning novelty, inventive step and industrial applicability; documents and explanations in support of this finding

1. Finding

Novelty (N)	Yes:	Claims 1 to 5
	No:	Claims
Inventive step (IS)	Yes:	Claims 1 to 5
	No:	Claims
Industrial applicability (IA)	Yes:	Claims 1 to 5
	No:	Claims

2. Documents and explanations (Rule 70.7):
See supplementary sheet

INTERNATIONAL PRELIMINARY EXAMINATION REPORT ON PATENTABILITY **International Ref. No.: PCT/AT2009/000040**
(Supplementary sheet)

Concerning No. V:

Established findings concerning novelty, inventive step and industrial applicability; documents and explanations in support of this finding

Reference is hereby made to the following documents:

D1 JP 11 339629 A (MITSUBISHI ELECTRIC CORP) 10 December 1999 (1999-12-10)

D2 EP 0 813 283 A (SCHNEIDER ELECTRIC SA [FR] SCHNEIDER ELECTRIC IND SAS [FR] 17 December 1997 (1997-12-17)

Document D1 is regarded as the closest state of the art in relation to the subject matter of claim 1.

It discloses a residual-current circuit breaker with mains-voltage-independent residual current tripping, comprising at least one summation current transformer (3), through which at least one first conductor and one second conductor of a network to be protected are guided, with at least one secondary winding being arranged on the summation current transformer (3), with the secondary winding being connected with a trip element (6) in terms of circuit design, which trip element is operatively connected via a breaker mechanism (4) with the break contacts (2) in the at least one first conductor and the at least one second conductor.

The subject matter of claim 1 thus differs from the known residual-current circuit breaker in such a way that a tertiary winding (8) is further arranged on the summation current transformer (2) for the purpose of avoiding false tripping, which winding is connected in terms of circuit design with at least one voltage-dependent resistor (9), the tertiary winding (8) and the voltage-dependent resistor (9) are dimensioned in such a way that the voltage-dependent resistor (9) will switch through at a predeterminable voltage in order to withdraw energy from the residual current signal induced in the secondary winding, and the tertiary winding (8) is part of a test current circuit (10) comprising a test button (11) and a test resistor (12), and is therefore new (Article 33(2) PCT).

The object to be achieved with the present invention can be regarded in such a way that the tendency towards false tripping is to be reduced.

The solution proposed in claim 1 of the present application for this object is based on inventive step for the following reasons (Article 33 (3) PCT):

In document D1, the test winding together with the "semiconductor element 10" is not dimensioned in such a way that the voltage-dependent resistor will switch through at a predeterminable voltage in order to withdraw energy from a residual current signal induced in the secondary winding.

In document D2, the voltage-dependent resistor is in the secondary winding.

The claims 2 to 5 are dependent upon claim 1 and thus also fulfill the requirements of PCT with respect to novelty and inventive step.

The changes of the new claim 1 are shown in the original description, page 5, first complete paragraph.

A residual-current circuit breaker

The invention relates to a residual-current circuit breaker according to the preamble of claim 1.

In accordance with relevant international, national and regional regulations, residual-current circuit breakers must comprise a testing device for testing the proper function of fault current tripping. Such a testing device usually comprises a test resistor and a test button, with a test current circuit being closed upon actuating the test button and, in this way, a simulated fault current being generated from one conductor to another conductor past a summation current transformer. If the residual-current circuit breaker works correctly, it is tripped and the break contacts of the residual-current circuit breaker will disconnect the conductor of a network to be protected. In the case of such testing devices which are arranged in an especially simple way, the test resistor should be able to thermally cope with powers of approx. 30 W which occur during a simulated residual current. Such a resistor would be relatively large and expensive, which is why a so-called auxiliary contact is arranged in the test current circuit which also disconnects the test current circuit when the break contacts are opened. As a result, the thermal load on the test resistor can be kept at a low level because the test resistor only needs to cope with the power merely for the period between the actuation of the test button and the tripping of the residual-current circuit breaker. The provision of such an auxiliary contact in the test current circuit and its connection to the break contacts is complex from a constructional and production viewpoint and requires a further expensive component in form of the auxiliary switch.

JP 11 339629 A describes a circuit breaker with a test current circuit which comprises a voltage stabilizing circuit with a Zener diode.

It is therefore the object of the invention to provide a residual-current circuit breaker of the kind mentioned above with which the mentioned disadvantages can be avoided and which with a test resistor of small overall size can be used under omission of a switching contact in the test current circuit and which has a simple configuration from a constructional viewpoint.

This is achieved by the features of claim 1.

A test resistor of small overall size can thus be used in a residual-current circuit breaker under omission of a switching contact in the test current circuit. As a result

of the considerably increased coil number or number of windings with which the test current circuit is coupled with the summation current transformer, which number is increased over the state of the art,

[Continued on page 2 of the originally filed documents]

NEW CLAIMS:

1. A residual-current circuit breaker (1) with mains-voltage-independent residual current tripping, comprising at least one summation current transformer (2), through which at least one first conductor (3) and one second conductor (4) of a network to be protected are guided, with at least one secondary winding (5) being disposed on the summation current transformer (2), the secondary winding (5) being connected in terms of the circuit design to a trip element (6) which is operatively connected via a breaker mechanism (20) with break contacts (7) in the at least one first conductor (3) and the at least one second conductor (4), characterized in that a tertiary winding (8) is further disposed on the summation current transformer (2) for avoiding false tripping, which tertiary winding is connected in terms of the circuit design to at least one voltage-dependent resistor (9), the tertiary winding (8) and the voltage-dependent resistor (9) are dimensioned in such a way that the voltage-dependent resistor (9) will switch through at a predeterminable voltage in order to withdraw energy from the residual current signal induced in the secondary winding, and the tertiary winding (8) is part of a test current circuit (10) comprising a test button (11) and a test resistor (12).

2. A residual-current circuit breaker (1) according to claim 1, characterized in that a first end (13) of the tertiary winding (8) is connected with the first conductor (3) in terms of circuit design, a second end (14) of the tertiary winding (8) is connected with the test button (11) in terms of circuit design, the test button (11) is connected with the test resistor (12) in terms of circuit design, and the test resistor (12) is connected with the second conductor (4) in terms of circuit design.

3. A residual-current circuit breaker (1) according to claim 1 or 2, characterized in that the voltage-dependent resistor (9) is arranged as at least one diode (15, 16).

4. A residual-current circuit breaker (1) according to one of the claims 1 to 3, characterized in that a first diode (15) and a second diode (16) are connected to the tertiary winding (8), with the first diode (15) being switched parallel to the second diode (16), and the first diode (15) is arranged in an antipolar manner in relation to the second diode (16).

5. A residual-current circuit breaker (1) according to one of the claims 1 to 4, characterized in that the trip element (6) is arranged as a permanent magnet trip element (17).

[Continued on page 8 of the originally filed documents]

VERTRAG ÜBER DIE INTERNATIONALE ZUSAMMENARBEIT AUF DEM GEBIET DES PATENTWESENS

PCT

INTERNATIONALER VORLÄUFIGER BERICHT ÜBER DIE PATENTIERBARKEIT

(Kapitel II des Vertrags über die internationale Zusammenarbeit auf dem Gebiet des Patentwesens)

Aktenzeichen des Anmelders oder Anwalts 31335/ab	**WEITERES VORGEHEN**	siehe Formblatt PCT/IPEA/416
Internationales Aktenzeichen PCT/AT2009/000040	Internationales Anmeldedatum *(Tag/Monat/Jahr)* 02.02.2009	Prioritätsdatum *(Tag/Monat/Jahr)* 14.02.2008
Internationale Patentklassifikation (IPC) oder nationale Klassifikation und IPC INV. H01H83/14		
Anmelder Moeller Gebäudeautomation GmbH		

1. Bei diesem Bericht handelt es sich um den internationalen vorläufigen Prüfungsbericht, der von der mit der internationalen vorläufigen Prüfung beauftragten Behörde nach Artikel 35 erstellt wurde und dem Anmelder gemäß Artikel 36 übermittelt wird.
2. Dieser BERICHT umfaßt insgesamt 5 Blätter einschließlich dieses Deckblatts.
3. Außerdem liegen dem Bericht ANLAGEN bei; diese umfassen
   a. ☒ *(an den Anmelder und das Internationale Büro gesandt)* insgesamt 4 Blätter; dabei handelt es sich um
      ☒ Blätter mit der Beschreibung, Ansprüchen und/oder Zeichnungen, die geändert wurden und diesem Bericht zugrunde liegen, und/oder Blätter mit Berichtigungen, denen die Behörde zugestimmt hat (siehe Regel 70.16 und Abschnitt 607 der Verwaltungsvorschriften).
      ☐ Blätter, die frühere Blätter ersetzen, die aber aus den in Feld Nr. 1, Punkt 4 und im Zusatzfeld angegebenen Gründen nach Auffassung der Behörde eine Änderung enthalten, die über den Offenbarungsgehalt der internationalen Anmeldung in der ursprünglich eingereichten Fassung hinausgeht.
   b. ☐ *(nur an das Internationale Büro gesandt)* insgesamt (bitte Art und Anzahl der/des elektronischen Datenträger(s) angeben) , der/die ein Sequenzprotokoll enthält/enthalten, nur in elektronischer Form, wie im Zusatzfeld betreffend das Sequenzprotokoll angegeben (siehe Ziffer 3*bis* des Anhangs C zu den Verwaltungsvorschriften).

4. Dieser Bericht enthält Angaben zu folgenden Punkten:

☒	Feld Nr. I	Grundlage des Berichts
☐	Feld Nr. II	Priorität
☐	Feld Nr. III	Keine Erstellung eines Gutachtens über Neuheit, erfinderische Tätigkeit und gewerbliche Anwendbarkeit
☐	Feld Nr. IV	Mangelnde Einheitlichkeit der Erfindung
☒	Feld Nr. V	Begründete Feststellung nach Artikel 35(2) hinsichtlich der Neuheit, der erfinderischen Tätigkeit und der gewerblichen Anwendbarkeit; Unterlagen und Erklärungen zur Stützung dieser Feststellung
☐	Feld Nr. VI	Bestimmte angeführte Unterlagen
☐	Feld Nr. VII	Bestimmte Mängel der internationalen Anmeldung
☐	Feld Nr. VIII	Bestimmte Bemerkungen zur internationalen Anmeldung

Datum der Einreichung des Antrags 2009-11-03	Datum der Fertigstellung dieses Berichts 27.05.2010
Name und Postanschrift der mit der internationalen vorläufigen Prüfung beauftragten Behörde Europäisches Patentamt D-80298 München Tel. +49 89 2399 - 0 Fax: +49 89 2399 - 4465	Bevollmächtigter Bediensteter Findeli, Luc Tel. +49 89 2399-7636

INTERNATIONALER VORLÄUFIGER BERICHT ÜBER DIE PATENTIERBARKEIT

Internationales Aktenzeichen
PCT/AT2009/000040

Feld Nr. I Grundlage des Berichts

1. Hinsichtlich der **Sprache** beruht der Bescheid auf

   ☒ der internationalen Anmeldung in der Sprache, in der sie eingereicht wurde.

   ☐ einer Übersetzung der internationalen Anmeldung in die folgende Sprache , bei der es sich um die Sprache der Übersetzung handelt, die für folgenden Zweck eingereicht worden ist:
   - ☐ internationale Recherche (nach Regeln 12.3 a) und 23.1 b))
   - ☐ Veröffentlichung der internationalen Anmeldung (nach Regel 12.4 a))
   - ☐ internationale vorläufige Prüfung (nach Regeln 55.2 a) und/oder 55.3 a))

2. Hinsichtlich der **Bestandteile*** der internationalen Anmeldung beruht der Bericht auf *(Ersatzblätter, die dem Anmeldeamt auf eine Aufforderung nach Artikel 14 hin vorgelegt wurden, gelten im Rahmen dieses Berichts als "ursprünglich eingereicht" und sind ihm nicht beigefügt)*:

Beschreibung, Seiten

2-6	in der ursprünglich eingereichten Fassung		
1, 1a	eingereicht am	03-11-2009	mit Telefax

Ansprüche, Nr.

1-5	eingereicht am	03-11-2009	mit Telefax

Zeichnungen, Blätter

1/1	in der ursprünglich eingereichten Fassung

☐ eines Sequenzprotokolls - siehe Zusatzfeld betreffend das Sequenzprotokoll.

3. ☐ Aufgrund der Änderungen sind folgende Unterlagen fortgefallen:
   - ☐ Beschreibung: Seite
   - ☐ Ansprüche: Nr.
   - ☐ Zeichnungen: Blatt/Abb.
   - ☐ Sequenzprotokoll *(genaue Angaben)*:
   - ☐ etwaige zum Sequenzprotokoll gehörende Tabellen *(genaue Angaben)*:

4. ☐ Dieser Bericht ist ohne Berücksichtigung (von einigen) der diesem Bericht beigefügten und nachstehend aufgelisteten Änderungen erstellt worden, da diese aus den im Zusatzfeld angegebenen Gründen nach Auffassung der Behörde über den Offenbarungsgehalt in der ursprünglich eingereichten Fassung hinausgehen (Regel 70.2 c)).
   - ☐ Beschreibung: Seite
   - ☐ Ansprüche: Nr.
   - ☐ Zeichnungen: Blatt/Abb.
   - ☐ Sequenzprotokoll *(genaue Angaben)*:

5. ☐ Dieser Bescheid wurde erstellt unter Berücksichtigung der **Berichtigung eines offensichtlichen Fehlers,** die nach Regel 91 von dieser Behörde genehmigt wurde bzw. dieser Behörde mitgeteilt wurde (Regel 70.2 e)).

6. ☐ Bei der Erstellung dieses Berichts wurde der ergänzende internationale Recherchenbericht/wurden die ergänzenden internationalen Recherchenberichte der folgenden Behörde(n) berücksichtigt (R. 45bis.8 b) und c)).

Feld Nr. V Begründete Feststellung nach Artikel 35 (2) hinsichtlich der Neuheit, der erfinderischen Tätigkeit und der gewerblichen Anwendbarkeit; Unterlagen und Erklärungen zur Stützung dieser Feststellung

1. Feststellung

Neuheit (N)	Ja:	Ansprüche	1-5
	Nein:	Ansprüche	
Erfinderische Tätigkeit (IS)	Ja:	Ansprüche	1-5
	Nein:	Ansprüche	
Gewerbliche Anwendbarkeit (IA)	Ja:	Ansprüche:	1-5
	Nein:	Ansprüche:	

2. Unterlagen und Erklärungen (Regel 70.7):

siehe Beiblatt

Zu Punkt V

Begründete Feststellung hinsichtlich der Neuheit, der erfinderischen Tätigkeit und der gewerblichen Anwendbarkeit; Unterlagen und Erklärungen zur Stützung dieser Feststellung

Es wird auf die folgenden Dokumente verwiesen:

D1 JP 11 339629 A (MITSUBISHI ELECTRIC CORP) 10. Dezember 1999 (1999-12-10)

D2 EP 0 813 283 A (SCHNEIDER ELECTRIC SA [FR] SCHNEIDER ELECTRIC IND SAS [FR]) 17. Dezember 1997 (1997-12-17)

Dokument D1 wird als nächstliegender Stand der Technik gegenüber dem Gegenstand des Anspruchs 1 angesehen.

Es offenbart einen Fehlerstromschutzschalter mit netzspannungsunabhängiger Fehlerstromauslösung, umfassend wenigstens einen Summenstromwandler (3) durch welchen wenigstens ein erster Leiter und ein zweiter Leiter eines zu schützenden Netzes geführt sind, wobei auf dem Summenstromwandler (3) wenigstens eine Sekundärwicklung angeordnet ist, wobei die Sekundärwicklung schaltungstechnisch mit einem Auslöser (6) verbunden ist, welcher über ein Schaltschloss (4) mit Trennkontakten (2) in dem wenigstens einen ersten Leiter und dem wenigstens einen zweiten Leiter wirkverbunden ist.

Der Gegenstand des Anspruchs 1 unterscheidet sich somit von dem bekannten Fehlerstromschutzschalter dadurch, dass auf dem Summenstromwandler (2) weiters eine Tertiärwicklung (8) zur Vermeidung von Fehlauslösungen angeordnet ist, welche schaltungstechnisch mit wenigstens einem spannungsabhängigen Widerstand (9) verbunden ist, dass die Tertiärwicklung (8) und der spannungsabhängige Widerstand (9) derart bemessen sind, dass der spannungsabhängige Widerstand (9) bei einer vorgebbaren Spannung durchschaltet um einem in der Sekundärwicklung induzierten Fehlerstromsignal Energie zu entziehen, und dass die Tertiärwicklung (8) Teil eines Prüfstromkreises (10) umfassend einen Prüftaster (11) und einen Prüfwiderstand (12) ist,

und ist daher neu (Artikel 33 (2) PCT).

Die mit der vorliegenden Erfindung zu lösende Aufgabe kann darin gesehen werden, dass die Neigung für Fehlauslösungen verringert werden soll.

Die in Anspruch 1 der vorliegenden Anmeldung für diese Aufgabe vorgeschlagene Lösung beruht aus den folgenden Gründen auf einer erfinderischen Tätigkeit (Artikel 33 (3) PCT):

Im Dokument D1 ist die Prüfwicklung zusammen mit dem "semiconductor element 10" nicht derart bemessen, dass der spannungsabhängige Widerstand bei einer vorgebbaren Spannung durchschaltet um einem in der Sekundärwicklung induzierten Fehlerstromsignal Energie zu entziehen.

Im Dokument D2 ist der spannungsabhängige Widerstand in der Sekundärwicklung.

Die Ansprüche 2-5 sind vom Anspruch 1 abhängig und erfüllen damit ebenfalls die Erfordernisse des PCT in Bezug auf Neuheit und erfinderische Tätigkeit.

Die Änderungen des neuen Patentanspruchs 1 sind aus der urspünglichen Beschreibung, Seite 5, erster vollständiger Absatz, zu entnehmen.

[PCT/AT2009/000040]
[Moeller Gebäudeautomation GmbH]

Fehlerstromschutzschalter

Die Erfindung betrifft einen Fehlerstromschutzschalter gemäß dem Oberbegriff des Patentanspruches 1.

Fehlerstromschutzschalter müssen gemäß einschlägiger internationaler, nationaler bzw. regionaler Vorschriften eine Prüfeinrichtung zur Prüfung der Funktionstauglichkeit der Fehlerstromauslösung aufweisen. Eine derartige Prüfeinrichtung umfasst in der Regel einen Prüfwiderstand und einen Prüftaster, wobei bei Betätigung des Prüftasters ein Prüfstromkreis geschlossen wird, und derart ein simulierter Fehlerstrom von einem Leiter zu einem anderen Leiter am Summenstromwandler vorbei erzeugt wird. Sofern der Fehlerstromschutzschalter ordnungsgemäß funktioniert, wird dieser ausgelöst und die Trennkontakte des Fehlerstromschutzschalters durchtrennen die Leiter eines zu schützenden Netzes. Bei derartigen besonders einfach ausgeführten Prüfeinrichtungen müsste der Prüfwiderstand die bei einem simulierten Fehlerstrom auftretenden Leistungen von etwa 30W thermisch bewältigen. Ein derartiger Widerstand wäre jedoch sehr groß und kostenintensiv, weshalb in der Regel ein sog. Hilfskontakt in dem Prüfstromkreis angeordnet ist, welcher bei einem Öffnen der Trennkontakte auch den Prüfstromkreis durchtrennt. Dadurch kann die thermische Belastung des Prüfwiderstandes gering gehalten werden, da der Prüfwiderstand die Leistung lediglich für den Zeitraum zwischen dem Betätigen des Prüftasters und dem Auslösen des Fehlerstromschutzschalters bewältigen muss. Allerdings ist das Vorsehen eines derartigen Hilfskontaktes im Prüfstromkreis und dessen Verbindung zu den Trennkontakten konstruktiv und fertigungstechnisch aufwendig, und erfordert in Form des Hilfsschalters einen weiteren kostenintensiven Bauteil.

Die JP 11 339629 A beschreibt einen Schutzschalter mit einem Prüfstromkreis, welcher eine Spannungsstabilisierungsschaltung mit einer Zenerdiode aufweist.

Aufgabe der Erfindung ist es daher einen Fehlerstromschutzschalter der eingangs genannten Art anzugeben, mit welchem die genannten Nachteile vermieden werden können, und mit welchem – unter Verzicht auf einen Schaltkontakt in dem Prüfstromkreis – ein Prüfwiderstand geringer Baugröße eingesetzt werden kann, und welcher einen konstruktiv einfachen Aufbau aufweist.

Erfindungsgemäß wird dies durch die Merkmale des Patentanspruches 1 erreicht.

Dadurch kann bei einem Fehlerstromschutzschalter – unter Verzicht auf einen Schaltkontakt in dem Prüfstromkreis – ein Prüfwiderstand geringer Baugröße eingesetzt werden. Durch die

Received at the EPO on Nov 03, 2009 15:33:12. Page 10 of 14

nun – gegenüber dem bekannten Stand der Technik – deutlich erhöhte Windungszahl bzw. Anzahl der Windungen bzw. Wicklungen, mit welcher der Prüfstromkreis an den

[weiter auf Seite 2 der ursprünglich eingereichten Unterlagen]

NEUE PATENTANSPRÜCHE

1. Fehlerstromschutzschalter (1) mit netzspannungsunabhängiger Fehlerstromauslösung, umfassend wenigstens einen Summenstromwandler (2) durch welchen wenigstens ein erster Leiter (3) und ein zweiter Leiter (4) eines zu schützenden Netzes geführt sind, wobei auf dem Summenstromwandler (2) wenigstens eine Sekundärwicklung (5) angeordnet ist, wobei die Sekundärwicklung (5) schaltungstechnisch mit einem Auslöser (6) verbunden ist, welcher über ein Schaltschloss (20) mit Trennkontakten (7) in dem wenigstens einen ersten Leiter (3) und dem wenigstens einen zweiten Leiter (4) wirkverbunden ist, **dadurch gekennzeichnet**, dass auf dem Summenstromwandler (2) weiters eine Tertiärwicklung (8) zur Vermeidung von Fehlauslösungen angeordnet ist, welche schaltungstechnisch mit wenigstens einem spannungsabhängigen Widerstand (9) verbunden ist, dass die Tertiärwicklung (8) und der spannungsabhängige Widerstand (9) derart bemessen sind, dass der spannungsabhängige Widerstand (9) bei einer vorgebbaren Spannung durchschaltet um einem in der Sekundärwicklung induzierten Fehlerstromsignal Energie zu entziehen, und dass die Tertiärwicklung (8) Teil eines Prüfstromkreises (10) umfassend einen Prüftaster (11) und einen Prüfwiderstand (12) ist.

2. Fehlerstromschutzschalter (1) nach Anspruch 1, **dadurch gekennzeichnet**, dass ein erstes Ende (13) der Tertiärwicklung (8) mit dem ersten Leiter (3) schaltungstechnisch verbunden ist, dass ein zweites Ende (14) der Tertiärwicklung (8) mit dem Prüftaster (11) schaltungstechnisch verbunden ist, dass der Prüftaster (11) schaltungstechnisch mit dem Prüfwiderstand (12) verbunden ist, und dass der Prüfwiderstand (12) schaltungstechnisch mit dem zweiten Leiter (4) verbunden ist.

3. Fehlerstromschutzschalter (1) nach Anspruch 1 oder 2, **dadurch gekennzeichnet**, dass der spannungsabhängige Widerstand (9) als wenigsten eine Diode (15, 16) ausgebildet ist.

4. Fehlerstromschutzschalter (1) nach einem der Ansprüche 1 bis 3, **dadurch gekennzeichnet**, dass an die Tertiärwicklung (8) eine erste Diode (15) und eine zweite Diode (16) angeschlossen sind, wobei die erste Diode (15) parallel zu der zweiten Diode (16) geschaltet ist, und die erste Diode (15) zur zweiten Diode (16) gegenpolar angeordnet ist.

Received at the EPO on Nov 03, 2009 15:33:12. Page 12 of 14

5. Fehlerstromschutzschalter (1) nach einem der Ansprüche 1 bis 4, **dadurch gekennzeichnet**, dass der Auslöser (6) als Permanentmagnetauslöser (17) ausgebildet ist.

[weiter auf Seite 8 der ursprünglich eingereichten Unterlagen]

UNITED STATES PATENT AND TRADEMARK OFFICE

UNITED STATES DEPARTMENT OF COMMERCE
United States Patent and Trademark Office
Address: COMMISSIONER FOR PATENTS
P.O. Box 1450
Alexandria, Virginia 22313-1450
www.uspto.gov

APPLICATION NO.	FILING DATE	FIRST NAMED INVENTOR	ATTORNEY DOCKET NO.	CONFIRMATION NO.
12/867,114	08/11/2010	Gerhard Dobusch	DOBUSCH-4	7709

20151 7590 11/24/2010
HENRY M FEIEREISEN, LLC
HENRY M FEIEREISEN
708 THIRD AVENUE
SUITE 1501
NEW YORK, NY 10017

EXAMINER
ENAD, ELVIN GENARGUE

ART UNIT	PAPER NUMBER
2832	

NOTIFICATION DATE	DELIVERY MODE
11/24/2010	ELECTRONIC

Please find below and/or attached an Office communication concerning this application or proceeding.

The time period for reply, if any, is set in the attached communication.

Notice of the Office communication was sent electronically on above-indicated "Notification Date" to the following e-mail address(es):

INFO@FEIEREISENLLC.COM

UNITED STATES PATENT AND TRADEMARK OFFICE

Commissioner for Patents
United States Patent and Trademark Office
P.O. Box 1450
Alexandria, VA 22313-1450
www.uspto.gov

HENRY M FEIEREISEN, LLC
HENRY M FEIEREISEN
708 THIRD AVENUE
SUITE 1501
NEW YORK NY 10017

In re Application of	
Gerhard DOBUSCH	**: DECISION ON REQUEST TO**
Application No.: 12/867,114	**: PARTICIPATE IN THE PCT PATENT**
Filed: 11 August 2010	**: PROSECUTION HIGHWAY PILOT**
Attorney Docket No.: DOBUSCH-4	**: PROGRAM AND PETITION**
For: RESIDUAL-CURRENT CIRCUIT	**: TO MAKE SPECIAL UNDER**
BREAKER	**: 37 CFR 1.102(d)**

This is a decision on the request to participate in the PCT Patent Prosecution Highway (PCT-PPH) pilot program and the petition under 37 CFR 1.102(a), filed 17 August 2010, to make the above-identified application special.

The request and petition are **DISMISSED**.

Discussion

A grantable request to participate in the PCT-PPH pilot program and petition to make special require:

(1) The U.S. application must have an eligible relationship to one or more PCT applications where the ISA or IPEA are the JPO, EPO, KIPO, or USPTO;

(2) At least one claim in the PCT application has novelty, inventive step, and industrial applicability and must be free of any observations in Box VIII in the latest work product in the international stage or applicant must identify and explain why the claim(s) is/are not subject to the observation in Box VIII;

(3) Applicant must submit a copy of the claim(s) from the PCT application(s) that have novelty, inventive step, and industrial applicability along with an English translation thereof and a statement that the English translation is accurate, if the claims are not in the English language;

(4) All the claims in the U.S. application must sufficiently correspond or be amended to sufficiently correspond to the claim(s) that have novelty, inventive step, and industrial applicability in the PCT application(s);

(5) Examination of the U.S. application has not begun;

(6) Applicant must submit a copy of the latest international work product from the PCT application indicating that the claim(s) have novelty, inventive step, and industrial applicability along with an English translation thereof and a statement that the English translation is accurate if the latest international work product is not in the English language;

(7) Applicant must submit an IDS listing the documents cited by the PCT examiner in the international work product along with copies of documents except U.S. patents or U.S. patent application publications.

Conditions (1-3) and (5-7) above are considered to have been met. However, the request to participate in the PPH pilot program and petition fails meet condition (4).

Regarding the requirement of condition (4), applicant failed to ensure that all the claims in the U.S. application sufficiently correspond to the claims that have novelty, inventive step, and industrial applicability in the PCT application. For example, claim 1 of the PCT application requires the test circuit to comprise a test button and a test resistor whereas this limitation is not required by claim 6 of the instant application.

Applicant is given **ONE** opportunity within a time period of **ONE MONTH or THIRTY DAYS**, whichever is longer, from the mailing date of this decision to correct the deficiencies. **NO EXTENSION OF TIME UNDER 37 CFR 1.136 IS PERMITTED.** If the deficiencies are not corrected with the time period given, the application will await action in its regular turn.

Response must be filed via the Electronic Filing System (EFS) with the Document Code PPH.PCT.652. Any preliminary amendments and IDS submitted with the PPH documents must be separately indexed as a preliminary amendment and IDS, respectively.

Telephone inquiries concerning this decision should be directed to Lee W. Young at 571-272-4549.

All other inquiries concerning the examination or status of the application is accessible in the PAIR system at http://www.uspto.gov/ebc/index.html.

Lee W. Young
TQAS Technology Center 2800 - Semiconductors,
Electrical & Optical Systems & Components

IN THE UNITED STATES PATENT AND TRADEMARK OFFICE

Docket No.: DOBUSCH-4

In re PATENT Application of:	)
GERHARD DOBUSCH	) **Examiner: Enad, Elvin G.**
	) **Group Art Unit: 2832**
Appl. No.: 12/867,114	)
Filed: August 11, 2010	) **Confirmation No.: 7709**
	)
For: RESIDUAL-CURRENT CIRCUIT BREAKER	)

COMMUNICATION IN RESPONSE TO DECISION ON REQUEST TO PARTICIPATE IN THE PCT PATENT PROSECUTION HIGHWAY PILOT PROGRAM AND PETITION TO MAKE SPECIAL UNDER 37 CFR 1.102(d)

CERTIFICATION OF EFS-WEB TRANSMISSION

I hereby certify that this paper is being EFS-Web transmitted to the U.S. Patent and Trademark Office, Alexandria VA 22313-1450, on **December 20, 2010.**
Date

Henry M. Feiereisen
(Name of Registered Representative)

(Signature)

12-20-2010
(Date of Signature)

Commissioner for Patents
P.O. Box 1450
Alexandria, VA 22313-1450

S I R:

This communication is in response to the 'DECISION ON REQUEST TO PARTICIPATE IN THE PCT PATENT PROSECUTION HIGHWAY PILOT PROGRAM AND PETITION TO MAKE SPECIAL UNDER 37 CFR 1.102(d)', issued on November 24, 2010, dismissing the request and the petition and setting a period for response terminating December 27, 2010.

The Commissioner is hereby also authorized to charge any fees which may be required during the pendency of this application, including any patent application processing fees under 37 C.F.R. 1.17, and any filing fees under 37 C.F.R. 1.16, including presentation of extra claims, or credit any overpayment to Deposit Account No: 06-0502.

Filed concurrently herewith is a preliminary amendment in the above-entitled application to further amend claims 6, 7 and 9. It is applicant's belief that claims 6-10 now sufficiently correspond to the claims 1-5 that have novelty, inventive step, and industrial applicability in the corresponding PCT application.

Grant of the request and petition under 37 CFR 1.102(a) are respectfully requested.

Respectfully submitted

By:_____

Henry M. Feiereisen
Agent for Applicant
Reg. No. 31,084

Date: December 20, 2010

708 Third Avenue
Suite 1501
New York, N.Y. 10017
(212) 244-5500
HMF:af

UNITED STATES PATENT AND TRADEMARK OFFICE

UNITED STATES DEPARTMENT OF COMMERCE
United States Patent and Trademark Office
Address: COMMISSIONER FOR PATENTS
P.O. Box 1450
Alexandria, Virginia 22313-1450
www.uspto.gov

APPLICATION NO.	FILING DATE	FIRST NAMED INVENTOR	ATTORNEY DOCKET NO.	CONFIRMATION NO.
12/867,114	08/11/2010	Gerhard Dobusch	DOBUSCH-4	7709

20151 7590 01/20/2011
HENRY M FEIEREISEN, LLC
HENRY M FEIEREISEN
708 THIRD AVENUE
SUITE 1501
NEW YORK, NY 10017

EXAMINER
ENAD, ELVIN GENARGUE

ART UNIT	PAPER NUMBER
2832	

NOTIFICATION DATE	DELIVERY MODE
01/20/2011	ELECTRONIC

Please find below and/or attached an Office communication concerning this application or proceeding.

The time period for reply, if any, is set in the attached communication.

Notice of the Office communication was sent electronically on above-indicated "Notification Date" to the following e-mail address(es):

INFO@FEIEREISENLLC.COM

UNITED STATES PATENT AND TRADEMARK OFFICE

Commissioner for Patents
United States Patent and Trademark Office
P.O. Box 1450
Alexandria, VA 22313-1450
www.uspto.gov

HENRY M FEIEREISEN, LLC
HENRY M FEIEREISEN
708 THIRD AVENUE
SUITE 1501
NEW YORK NY 10017

In re Application of	
Gerhard DOBUSCH	**: DECISION ON REQUEST TO**
Application No.: 12/867,114	**: PARTICIPATE IN THE PCT PATENT**
Filed: 11 August 2010	**: PROSECUTION HIGHWAY PILOT**
Attorney Docket No.: DOBUSCH-4	**: PROGRAM AND PETITION**
For: RESIDUAL-CURRENT CIRCUIT	**: TO MAKE SPECIAL UNDER**
BREAKER	**: 37 CFR 1.102(a)**

This is a decision on the request to participate in the PCT Patent Prosecution Highway (PCT-PPH) pilot program and the petition under 37 CFR 1.102(a), filed 17 August 2010 and renewed on 20 December 2010, to make the above-identified application special.

The request and petition are **GRANTED**.

Discussion

A grantable request to participate in the PCT-PPH pilot program and petition to make special require:

(1) The U.S. application must disclose an eligible relationship to one or more PCT applications where the ISA or IPEA are the JPO, EPO, KIPO, or USPTO;

(2) At least one claim in the PCT application has novelty, inventive step, and industrial applicability and must be free of any observations in Box VIII in the latest work product in the international stage or applicant must identify and explain why the claim(s) is/are not subject to the observation in Box VIII;

(3) Applicant must submit a copy of the claim(s) from the PCT application(s) that have novelty, inventive step, and industrial applicability along with an English translation thereof and a statement that the English translation is accurate, if the claims are not in the English language;

(4) All the claims in the U.S. application must sufficiently correspond or be amended to sufficiently correspond to the claim(s) that have novelty, inventive step, and industrial applicability in the PCT application(s);

(5) Examination of the U.S. application has not begun;

(6) Applicant must submit a copy of the latest international work product from the PCT application indicating that the claim(s) have novelty, inventive step, and industrial applicability along with an English translation thereof and a statement that the English translation is accurate if the latest international work product is not in the English language;

(7) Applicant must submit an IDS listing the documents cited by the PCT examiner in the international work product along with copies of documents except U.S. patents or U.S. patent application publications.

The request to participate in the PCT-PPH pilot program and petition comply with the above requirements. Accordingly, the above-identified application has been accorded "special" status.

Telephone inquiries concerning this decision should be directed to Lee W. Young at 571-272-4549.

All other inquiries concerning the examination or status of the application is accessible in the PAIR system at http://www.uspto.gov/ebc.index.html.

This application will be forwarded to the examiner for action on the merits commensurate with this decision once this application's formality reviews have been completed.

Lee W. Young
TQAS Technology Center 2800 - Semiconductors,
Electrical & Optical Systems & Components

UNITED STATES PATENT AND TRADEMARK OFFICE

Commissioner for Patents
United States Patent and Trademark Office
P.O. Box 1450
Alexandria, VA 22313-1450
www.uspto.gov

MAILED

FEB 24 2011

PCT LEGAL ADMINISTRATION

KINNEY & LANGE, P.A.
THE KINNEY & LANGE BUILDING
312 SOUTH THIRD STREET
MINNEAPOLIS MN 55415-1002

In re Application of	:
SHAO et al.	:
Application No.: 12/867,153	: DECISION ON RESPONSE
PCT No.: PCT/US08/06318	:
Int. Filing: 16 May 2008	:
Priority Date: None	:
Attorney Docket No.: PA0006448U-U77.12-20KL	:
For: A STABILIZED PLATINUM CATALYST	:
	:

This application is before the PCT Legal Office for consideration of applicant's request to correct the inventor's name filed on 03 December 2010 in the United States Patent and Trademark Office (USPTO) in the above-captioned application.

On 11 August 2010, applicant filed a request for U.S. national stage entry for PCT/US08/06318 along with the basic national fee. On 03 December 2010, applicant filed a request to correct inventor's name, which was inadvertently misspelled as a result of a typographical error in the published international application as Hagens. The third inventor's correct name Patrick L. **Hagans** is accepted and noted for the record. No petition fee is required.

Thus, the declaration, submitted on 11 August 2010, is acceptable and in compliance with 37 CFR 1.497(a) and (b).

The application will be forwarded to the United States Designated/Elected Office for further processing. The 35 U.S.C. 371(c)(1), (c)(2) and (c)(4) date is 11 August 2010.

/Cynthia M. Kratz/
Cynthia M. Kratz
Attorney Advisor
PCT Legal Office
Telephone: (571) 272-3286
Facsimile: (571) 272-0459

Doc Code: PET.GREEN
Document Description: Petition for Green Tech Pilot

PTO/SB/420 (05-10)
Approved for use through 05/31/2010. OMB 0651-0062
U.S. Patent and Trademark Office; U. S. DEPARTMENT OF COMMERCE
Under the Paperwork Reduction Act of 1995, no persons are required to respond to a collection of information unless it displays a valid OMB control number.

PETITION TO MAKE SPECIAL UNDER THE GREEN TECHNOLOGY PILOT PROGRAM

Attorney Docket Number: ID0063US	Application Number (if known): 12/867,214	Filing date: AUGUST 11, 2010

First Named Inventor: Steve Yanik

Title: CO-PROCESSING SOLID BIOMASS IN A CONVENTIONAL PETROLEUM REFINING PROCESS UNIT

APPLICANT HEREBY REQUESTS TO PARTICIPATE IN THE GREEN TECHNOLOGY PILOT PROGRAM FOR THE ABOVE-IDENTIFIED APPLICATION. See Instruction Sheet on page 2.

This petition must be timely filed electronically using the USPTO electronic filing system, EFS-Web.

1. By filing this petition:

   Applicant is requesting early publication: Applicant hereby requests early publication under 37 CFR 1.219 and the publication fee set forth in 37 CFR 1.18(d) accompanies this request.

2. By filing this petition: applicant is agreeing to make an election without traverse in a telephonic interview and elect an invention that meets the eligibility requirements set forth in the notice titled "Pilot Program for Green Technologies Including Greenhouse Gas Reduction," as modified by the notice titled "Elimination of Classification Requirement in the Green Technology Pilot Program," each of which was published in the Federal Register, if the Office determines that the claims are not obviously directed to a single invention.

3. This request is accompanied by statements of special status for the eligibility requirement.

4. The application contains no more than three (3) independent claims and twenty (20) total claims.

5. The application does not contain any multiple dependent claims.

6. Other attachments: _____

Signature /jra/	Date 8/11/2010
Name (Print/Typed) Jeffrey R. Anderson	Registration Number 42,263

***Note**: Signatures of all the inventors or assignees of record of the entire interest or their representative(s) are required in accordance with 37 CFR 1.33 and 11.18. Please see 37 CFR 1.4(d) for the form of the signature. If necessary, submit multiple forms for more than one signature, see below*.*

☐ *Total of _____ forms are submitted.

The information is required to obtain or retain a benefit by the public which is to file (and by the USPTO to process) an application. Confidentiality is governed by 35 U.S.C. 122 and 37 CFR 1.11 and 1.14. This collection is estimated to take 12 hours to complete, including gathering, preparing, and submitting the completed application form to the USPTO. Time will vary depending upon the individual case. Any comments on the amount of time you require to complete this form and/or suggestions for reducing this burden, should be sent to the Chief Information Officer, U.S. Patent and Trademark Office, U.S. Department of Commerce, P.O. Box 1450, Alexandria, VA 22313-1450. DO NOT SEND FEES OR COMPLETED FORMS TO THIS ADDRESS. **SEND TO: Commissioner for Patents, P.O. Box 1450, Alexandria, VA 22313-1450.**

If you need assistance in completing the form, call 1-800-PTO-9199 and select option 2.

Under the Paperwork Reduction Act of 1995, no persons are required to respond to a collection of information unless it displays a valid OMB control number.

Instruction Sheet for Petition to Make Special Under the Green Technology Pilot Program

(Not to be Submitted to the USPTO)

The following is a summary of the requirements (for more information see the notices (i) "Pilot Program for Green Technologies Including Greenhouse Gas Reduction" and (ii) "Elimination of Classification Requirement in the Green Technology Pilot Program," available on the USPTO web site at http://www.uspto.gov/patents/init_events/green_tech.jsp):

(1) The application must be a non-reissue, non-provisional utility application filed under 35 U.S.C. 111(a), or an international application that has entered the national stage in compliance with 35 U.S.C. 371. The application must be previously filed before the publication date of the notice cited above. Reexamination proceedings are excluded from this pilot program.

(2) The application must contain three or fewer independent claims and twenty or fewer total claims. The application must not contain any multiple dependent claims. For an application that contains more than three independent claims or twenty total claims, or multiple dependent claims, applicant must file a preliminary amendment in compliance with 37 CFR 1.121 to cancel the excess claims and/or the multiple dependent claims at the time the petition to make special is filed.

(3) The claims must be directed to a single invention that materially enhances the quality of the environment, or that materially contributes to: (1) the discovery or development of renewable energy resources; (2) the more efficient utilization and conservation of energy resources; or (3) green house gas emission reduction (see the eligibility requirements of sections II and III of the notice (i) cited above). The petition must include a statement that, if the USPTO determines that the claims are directed to multiple inventions (e.g., in a restriction requirement), applicant will agree to make an election without traverse in a telephonic interview, and elect an invention that meets the eligibility requirements in section II or III of the notice (i) cited above.

(4) The petition to make special must be timely filed electronically using the USPTO electronic filing system, EFS-Web, and selecting the document description of "Petition for Green Tech Pilot" on the EFS-Web screen. Applicant should use form PTO/SB/420, which is available as a Portable Document Format (PDF) fillable form in EFS-Web and on the USPTO Web site.

(5) The petition to make special must be filed at least one day prior to the date that a first Office action (which may be an Office action containing only a restriction requirement) appears in the Patent Application Information Retrieval (PAIR) system. Applicant may check the status of the application using PAIR.

(6) The petition to make special must be accompanied by a request for early publication in compliance with 37 CFR 1.219 and the publication fee set forth in 37 CFR 1.18(d).

Privacy Act Statement

The **Privacy Act of 1974 (P.L. 93-579)** requires that you be given certain information in connection with your submission of the attached form related to a patent application or patent. Accordingly, pursuant to the requirements of the Act, please be advised that: (1) the general authority for the collection of this information is 35 U.S.C. 2(b)(2); (2) furnishing of the information solicited is voluntary; and (3) the principal purpose for which the information is used by the U.S. Patent and Trademark Office is to process and/or examine your submission related to a patent application or patent. If you do not furnish the requested information, the U.S. Patent and Trademark Office may not be able to process and/or examine your submission, which may result in termination of proceedings or abandonment of the application or expiration of the patent.

The information provided by you in this form will be subject to the following routine uses:

1. The information on this form will be treated confidentially to the extent allowed under the Freedom of Information Act (5 U.S.C. 552) and the Privacy Act (5 U.S.C 552a). Records from this system of records may be disclosed to the Department of Justice to determine whether disclosure of these records is required by the Freedom of Information Act.
2. A record from this system of records may be disclosed, as a routine use, in the course of presenting evidence to a court, magistrate, or administrative tribunal, including disclosures to opposing counsel in the course of settlement negotiations.
3. A record in this system of records may be disclosed, as a routine use, to a Member of Congress submitting a request involving an individual, to whom the record pertains, when the individual has requested assistance from the Member with respect to the subject matter of the record.
4. A record in this system of records may be disclosed, as a routine use, to a contractor of the Agency having need for the information in order to perform a contract. Recipients of information shall be required to comply with the requirements of the Privacy Act of 1974, as amended, pursuant to 5 U.S.C. 552a(m).
5. A record related to an International Application filed under the Patent Cooperation Treaty in this system of records may be disclosed, as a routine use, to the International Bureau of the World Intellectual Property Organization, pursuant to the Patent Cooperation Treaty.
6. A record in this system of records may be disclosed, as a routine use, to another federal agency for purposes of National Security review (35 U.S.C. 181) and for review pursuant to the Atomic Energy Act (42 U.S.C. 218(c)).
7. A record from this system of records may be disclosed, as a routine use, to the Administrator, General Services, or his/her designee, during an inspection of records conducted by GSA as part of that agency's responsibility to recommend improvements in records management practices and programs, under authority of 44 U.S.C. 2904 and 2906. Such disclosure shall be made in accordance with the GSA regulations governing inspection of records for this purpose, and any other relevant (*i.e.*, GSA or Commerce) directive. Such disclosure shall not be used to make determinations about individuals.
8. A record from this system of records may be disclosed, as a routine use, to the public after either publication of the application pursuant to 35 U.S.C. 122(b) or issuance of a patent pursuant to 35 U.S.C. 151. Further, a record may be disclosed, subject to the limitations of 37 CFR 1.14, as a routine use, to the public if the record was filed in an application which became abandoned or in which the proceedings were terminated and which application is referenced by either a published application, an application open to public inspection or an issued patent.
9. A record from this system of records may be disclosed, as a routine use, to a Federal, State, or local law enforcement agency, if the USPTO becomes aware of a violation or potential violation of law or regulation.

UNITED STATES PATENT AND TRADEMARK OFFICE

UNITED STATES DEPARTMENT OF COMMERCE
United States Patent and Trademark Office
Address: COMMISSIONER FOR PATENTS
P.O. Box 1450
Alexandria, Virginia 22313-1450
www.uspto.gov

APPLICATION NO.	FILING DATE	FIRST NAMED INVENTOR	ATTORNEY DOCKET NO.	CONFIRMATION NO.
12/867,214	10/14/2011	Steve Yanik	ID0063US	8367

90394 7590 11/17/2011
Kior Inc.
13001 Bay Park Rd.
Pasadena, TX 77507

EXAMINER

ART UNIT	PAPER NUMBER
1771	

MAIL DATE	DELIVERY MODE
11/17/2011	PAPER

Please find below and/or attached an Office communication concerning this application or proceeding.

The time period for reply, if any, is set in the attached communication.

UNITED STATES PATENT AND TRADEMARK OFFICE

Commissioner for Patents
United States Patent and Trademark Office
P.O. Box 1450
Alexandria, VA 22313-1450
www.uspto.gov

11/17/2011

Kior Inc.
13001 Bay Park Rd.
Pasadena TX 77507

In re Application of	:	
Yanik et al.	:	DECISION ON PETITION
Application No. 12/867,214	:	TO MAKE SPECIAL UNDER
Filed: 10/14/2011	:	THE GREEN TECHNOLOGY
Attorney Docket No. **ID0063US**	:	PILOT PROGRAM

This is a decision on the petition under 37 CFR 1.102, filed 8/11/2011, to make the above-identified application special under the pilot program for applications pertaining to Green Technologies as set forth in 74 Federal Register Notice 64666 (December 8, 2009) and amended by 75 Federal Register Notice 28554 (May 21, 2010) and 75 Federal Register Notice 69049 (November 10, 2010).

The petition is **GRANTED**.

A grantable petition to make an application special under 37 CFR 1.102 and the pilot program as set forth in 74 FR 64666 must be directed to a nonprovisional application filed under 35 USC 111(a) or be a national stage entry under 35 USC 371, exclusive of any reissue applications.

In order to qualify for special status, the following requirements must be met. 1) The application must have no more than 3 independent claims and no more than 20 total claims. 2) The application must not contain any multiple dependent claims. 3) The petition must state the basis for seeking special status, i.e., the claimed invention either: A) materially enhances the quality of the environment or B) materially contributes to: i) the discovery or development of renewable energy resources, ii) the more efficient utilization and conservation of energy resources, or iii) greenhouse gas emission reduction. 4) If the disclosure is not clear on its face that the claimed invention materially contributes under category (A) or (B), the petition must be accompanied by a statement by the applicant, assignee, or an attorney/agent registered to practice before the Office explaining how the materiality standard is met. 5) A statement that applicant will agree to make an election without traverse in a telephonic interview if a restriction requirement is made by the examiner. 6) The petition to make special must be filed electronically. 7) The petition must be filed at least one day prior to the date that a first Office Action appears in the Patent Application Information Retrieval (PAIR) system. 8) The petition must be accompanied by a request for early publication in compliance with 37 CFR 1.219 and include the publication fee as set forth in 37 CFR 1.18(d).

The requirement for a fee for consideration of the petition to make special for applications pertaining to Green Technologies has been waived.

The instant petition complies with items 1 – 8 above. Accordingly, the above-identified application has been accorded "special" status.

Telephone inquires concerning this decision should be directed to Tom Dunn at 571-272-1171.

The application is being forwarded to the Technology Center Art Unit 1771 for action on the merits commensurate with this decision.

/Tom Dunn/

Tom Dunn
Quality Assurance Specialist
Technology Center 1700

UNITED STATES PATENT AND TRADEMARK OFFICE

Commissioner for Patents
United States Patent and Trademark Office
P.O. Box 1450
Alexandria, VA 22313-1450
www.uspto.gov

MAILED

FEB 22 2011

PCT LEGAL ADMINISTRATION

DAVIS WRIGHT TREMAINE, LLP/Seattle
1201 Third Avenue, Suite 2200
SEATTLE WA 98101-3045

In re Application of	:	
ZHAO et al.	:	
Application No.: 12/867,243	:	NOTIFICATION
PCT No.: PCT/CN09/00145	:	
Int. Filing Date: 10 February 2009	:	
Priority Date: 14 February 2008	:	
Attorney Docket No.: 92397-001US0	:	
For: THE AROMATIC RING	:	
TRIAZINE DERIVATIVES AND USES	:	
THEREOF		

This is a decision on a petition under 37 CFR 1.182 filed in the United States Patent and Trademark Office (USPTO) on 08 February 2011 to correct the international application number.

On 11 August 2010, applicant filed a request for entry into the national stage in the United States which was accompanied by, *inter alia*, the U.S. Basic National Fee. The papers were assigned serial number 12/867,243. However, the international application PCT/**US09**/00145 as indicated on the electronic acknowledgement receipt differs from the PCT application number PCT/**CN09**/00145 on the Transmittal Letter.

On 08 February 2011, the instant petition under 37 CFR 1.182 was filed.

Applicant's petition under 37 CFR 1.182 to correct the international application no. to **PCT/CN07/00145** on the national stage papers filed on 11 August 2010 is **GRANTED**. The $400 petition fee was paid.

The USPTO records will identify the present application **12/867,243** as the national stage of **PCT/CN09/00145.**

/Cynthia M. Kratz/
Cynthia M. Kratz
Attorney Advisor
PCT Legal Administration
Telephone: 571-272-3292
Facsimile: 571-273-0459

UNITED STATES PATENT AND TRADEMARK OFFICE

Commissioner for Patents
United States Patent and Trademark Office
P.O. Box 1450
Alexandria, VA 22313-1450
www.uspto.gov

23448
INTELLECTUAL PROPERTY/TECHNOLOGY LAW
P.O. Box 14329
Research Triangle Park, NC 27709

MAILED

MAR 07 2011

PCT LEGAL ADMINISTRATION

In re Application of
SWEENEY *et al*
U.S. Application No.: 12/867,245
PCT No.: PCT/US2009/033754
Int. Filing Date: 11 February 2009
Priority Date: 11 February 2008
Attorney Docket No.: 2771-851-CIP
For: ION SOURCE CLEANING IN SEMICONDUCTOR PROCESSING SYSTEMS

DECISION

This decision is in response to applicants' petition under 37 CFR 1.47(a) filed 10 November 2010.

BACKGROUND

On 17 September 2010, a Notification of Missing Requirements (Form PCT/DO/EO/905) was mailed requesting an oath or declaration in compliance with 37 CFR 1.497(a) and (b). Applicants were given two months to respond with extensions of time available under 37 CFR 1.136(a).

On 10 November 2010, applicants filed the subject petition which was accompanied by, *inter alia*, a $130.00 surcharge fee; a $200.00 petition fee; a declaration signed on behalf of the nonsigning inventor; a declaration of Steven J. Hultquist; and other documentary evidence in support of the petition (Appendix A - B).

DISCUSSION

Applicants claim that co-inventor, David ELDRIDGE, refuses to cooperate and have filed the subject petition under 37 CFR 1.47(a).

A petition under 37 CFR 1.47(a) requires: (1) the petition fee; (2) factual proof that the missing joint inventor cannot be located or refuses to cooperate; (3) a statement of the last known address of the nonsigning joint inventor; (4) and an oath or declaration executed by the signing joint inventors on their behalf and on behalf of the nonsigning joint inventor.

Applicants submitted a $200.00 petition fee. The last known address of the nonsigning inventor is listed in the petition. A declaration signed by nine of the ten

named inventors was provided. This declaration complies with 37 CFR 1.497(a) and (b) and satisfies the requirements of MPEP § 409.03(a)(A).

Therefore, items (1), (3) and (4) of 37 CFR 1.47(a) are satisfied.

Regarding item (2) of 37 CFR 1.47(a), applicants provided a statement of facts by Mr. Hultquist detailing the steps taken to obtain the cooperation of Mr. ELDRIDGE. Mr. Hultquist claims that a complete copy of the subject application and a declaration were sent to the nonsigning inventor on 12 August 2010, and again on 23 September 2010. No response to these letters were received. Mr. Hultquist explains that this follows an earlier pattern of conduct by Mr. ELDRIDGE in an earlier patent application (U.S. application No. 12/298,727) in which a petition under 37 CFR 1.47(a) was granted. Applicants claim that the non-responsiveness of Mr. ELDRIDGE constitutes a refusal to cooperate.

MPEP § 409.03(d)(II) requires that for a refusal to be accepted, the 37 CFR 1.47(a) applicants must show that a complete copy of the application, including specification, claims and drawings, were presented (or attempted to be presented) to the nonsigning inventor.

In this case, the 37 CFR 1.47(a) applicants claim that a complete copy of the subject application was sent to the last known address of the nonsigning inventor on two separate occasions. However, applicants have not provided documentary evidence to support this claim. Specifically, applicants failed to provided copies of the cover letters for the documents (purportedly mailed 12 August 2010 and 23 September 2010) showing that a complete copy of the application was included with the declaration and assignment. Further, applicants have not provided evidence showing that Mr. ELDRIDGE received the documents[1] mailed 12 August 2010 and 23 September 2010.

For these reasons, item (2) of 37 CFR 1.47(a) is not yet satisfied.

CONCLUSION

Applicants' petition under 37 CFR 1.47(a) is **DISMISSED** without prejudice.

If reconsideration on the merits of this petition is desired, a proper response must be filed within **TWO (2) MONTHS** from the mail date of this decision. Extensions of time under 37 CFR 1.136(a) are available.

Failure to timely respond will result in the abandonment of the application.

---

[1] Such evidence could include signed postal receipts, a telephone call with the nonsigning inventor verifying receipt, etc.

Any further correspondence with respect to this matter may be filed electronically via EFS-Web selecting the document description "Petition for review and processing by the PCT Legal Office" or by mail addressed to Mail Stop PCT, Commissioner for Patents, Office of PCT Legal Administration, P.O. Box 1450, Alexandria, Virginia 22313-1450, with the contents of the letter marked to the attention of the Office of PCT Legal Administration.

James Thomson

James Thomson
Attorney Advisor
Office of PCT Legal Administration

Tel.: (571) 272-3302

UNITED STATES PATENT AND TRADEMARK OFFICE

Commissioner for Patents
United States Patent and Trademark Office
P.O. Box 1450
Alexandria, VA 22313-1450
www.uspto.gov

23448
INTELLECTUAL PROPERTY/TECHNOLOGY LAW
P.O. Box 14329
Research Triangle Park, NC 27709

MAILED

JUN 06 2011

PCT LEGAL ADMINISTRATION

In re Application of
SWEENEY *et al*
U.S. Application No.: 12/867,245
PCT No.: PCT/US2009/033754
Int. Filing Date: 11 February 2009
Priority Date: 11 February 2008
Attorney Docket No.: 2771-851-CIP
For: ION SOURCE CLEANING IN SEMICONDUCTOR PROCESSING SYSTEMS

DECISION

This decision is in response to applicants' renewed petition under 37 CFR 1.47(a) filed 12 April 2011.

BACKGROUND

On 07 March 2011, a decision dismissing applicants' petition pursuant to 37 CFR 1.47(a) was mailed. Applicants were given two months to respond with extensions of time available.

On 12 April 2011, applicants filed the subject response which was accompanied by documentary evidence in support of the petition.

DISCUSSION

Applicants claim that David ELDRIDGE refuses to cooperate.

Applicants satisfied all requirements of 37 CFR 1.47(a) in the initial petition except item (2), *i.e.*, factual proof that the missing joint inventors cannot be located or refuse to cooperate. Specifically, applicants did not provide copies of all relevant documents discussed in the statement of facts by Mr. Hultquist, or provide proof of delivery of the documents mailed 12 August 2010 and 23 September 2010.

In the renewed petition, the 37 CFR 1.47(a) applicants provided copies of the cover letters for the documents mailed 12 August 2010, and 23 September 2010 as requested. The documents mailed 12 August 2010 were sent by regular mail and applicants included evidence showing that First Class postage was printed. The documents mailed 23 September 2010 were sent by certified mail and applicants included a copy of the "Customer Online Label Record" showing delivery on 25

September 2010.

A review of the evidence shows that a complete copy of the subject application and a declaration was sent and received by the nonsigning inventor. The lack of response by Mr. ELDRIDGE constitutes a refusal to cooperate as discussed in MPEP § 409.03(d)(II). Item (2) of 37 CFR 1.47(a) is now satisfied.

All requirements of 37 CFR 1.47(a) are complete.

CONCLUSION

Applicants' renewed petition under 37 CFR 1.47(a) is **GRANTED**.

Applicants have completed the requirements for acceptance under 35 U.S.C. 371(c). The application has an international filing date of 11 February 2009 under 35 U.S.C. 363, and a 35 U.S.C. 371 date of 10 November 2010.

As provided in 37 CFR 1.47(a), a notice of the filing of this application will be forwarded to the nonsigning inventor at his last known address of record and will be published in the Official Gazette.

This application is being forwarded to the National Stage Processing Division of the Office of PCT Operations for continued processing

James Thomson

James Thomson
Attorney Advisor
Office of PCT Legal Administration

Tel.: (571) 272-3302

UNITED STATES PATENT AND TRADEMARK OFFICE

Commissioner for Patents
United States Patent and Trademark Office
P.O. Box 1450
Alexandria, VA 22313-1450
www.uspto.gov

David Eldridge
2251 County Road, 284,
Liberty Hill, TX 78642

MAILED
JUN 06 2011
PCT LEGAL ADMINISTRATION

In re Application of
SWEENEY *et al*
U.S. Application No.: 12/867,245
PCT No.: PCT/US2009/033754
Int. Filing Date: 11 February 2009
Priority Date: 11 February 2008
Attorney Docket No.: 2771-851-CIP
For: ION SOURCE CLEANING IN SEMICONDUCTOR PROCESSING SYSTEMS

Dear Mr Eldridge:

You are named as an inventor in the above-captioned United States national stage application, filed under the provisions of 37 CFR 1.47(a) and 35 U.S.C. 116. Should a patent be granted, you will be designated as an inventor.

As a named inventor, you are entitled to inspect any paper in the file wrapper of the application, order copies of all or any part thereof (at a prepaid cost per 37 CFR 1.19) or to make your position of record in the application. Alternatively, you may arrange to do any of the preceding through a registered patent agent or attorney presenting written authorization from you. The counsel for the applicant is listed below. Joining in the application would entail the filing of an appropriate oath or declaration by you pursuant to 37 CFR 1.63.

James Thomson
Attorney Advisor
Office of PCT Legal Administration

Tel.: (571) 272-3302

INTELLECTUAL PROPERTY/TECHNOLOGY LAW
P.O. Box 14329
Research Triangle Park, NC 27709

UNITED STATES PATENT AND TRADEMARK OFFICE

Commissioner for Patents
United States Patent and Trademark Office
P.O. Box 1450
Alexandria, VA 22313-1450
www.uspto.gov

THOMPSON HINE L.L.P.
Intellectual Property Group
P.O. BOX 8801
DAYTON OH 45401-8801

MAILED

APR 19 2011

PCT LEGAL ADMINISTRATION

In re Application of	:	
HU, et al.	:	
PCT No.: PCT/EP2009/051660	:	DECISION ON PETITION
Application No.: 12/867,257	:	
Int. Filing Date: 12 February 2009	:	UNDER 37 CFR 1.47(a)
Priority Date: 15 February 2008	:	
Atty. Docket No.: 534334-00099	:	
For: TRANSISTOR	:	

This decision is in response to applicant's petition under 37 CFR § 1.47 filed 01 February 2011 in the United States Patent and Trademark Office (USPTO).

BACKGROUND

On 12 February 2009, applicant filed international application PCT/EP2009/051660 which claimed priority to an earlier application filed 15 February 2008. A copy of the international application was communicated from the International Bureau (IB) to the United States on 20 August 2009. Pursuant to 37 CFR 1.495, the thirty-month period for paying the basic national fee in the United States expired at midnight on 15 August 2010.

On 12 August 2010, applicant filed a transmittal letter for entry into the national stage in the United States, which was accompanied by the requisite basic national fee as required by 35 U.S.C. 371(c)(1), an application data sheet, an Information Disclosure Statement and a preliminary amendment.

On 02 September 2010, applicant was mailed a "NOTIFICATION OF MISSING REQUIREMENTS UNDER 35 U.S.C. 371" (Form PCT/DO/EO/905) informing applicant of the need to provide an oath or declaration of the inventors, in compliance with 37 CFR 1.497(a) and (b), identifying the application by the international application number and international filing date. Applicant was afforded two months to file the proper reply and informed that this period could be extended pursuant to 37 CFR 1.136(a).

On 01 February 2011, applicant filed the present petition under 37 CFR 1.47(a) accompanied by a petition for a three-month extension of time and payment of the appropriate extension of time fee. With payment of the three-month extension of time fee, the response is considered timely filed.

DISCUSSION

A petition under 37 CFR 1.47(a) must be accompanied by (1) the fee under 37 CFR 1.17(g), (2) factual proof that the missing joint investor refuses to execute the application or cannot be reached after diligent effort, (3) a statement of the last known address of the missing inventor, and (4) an oath or declaration by each 37 CFR 1.47(a) applicant on his or her own behalf and on behalf of the non-signing joint inventor. With the filing of the present petition and accompanying papers, applicant has satisfied all four items.

CONCLUSION

For the reasons above, applicant's petition under 37 CFR 1.47(a) is **GRANTED**.

The application has an international filing date of 12 February 2009 under 35 U.S.C. 363, and will be given a date of **01 February 2011** under 35 U.S.C. 371(c)(1), (c)(2) and (c)(4).

As provided in 37 CFR 1.47(c), a notice of the filing of this application will be forwarded to the non-signing inventor at his last known address of record. A notice of the filing of the application under 37 CFR 1.47(a) will be published in the Official Gazette.

This application is being returned to the DO/EO/US for processing in accordance with this decision.

Derek A. Putonen
Attorney Advisor
Office of PCT Legal Administration
Tel: (571) 272-3294

UNITED STATES PATENT AND TRADEMARK OFFICE

Commissioner for Patents
United States Patent and Trademark Office
P.O. Box 1450
Alexandria, VA 22313-1450
www.uspto.gov

Mr. William Lau
223, Lot 1680
Lorong Batu Kawa 1C1
Sunny Heights, 93250 Kuching
MALAYSIA

MAILED

APR 19 2011

PCT LEGAL ADMINISTRATION

In re Application of
HU, et al.
PCT No.: PCT/EP2009/051660
Application No.: 12/867,257
Int. Filing Date: 12 February 2009
Priority Date: 15 February 2008
Atty. Docket No.: 534334-00099
For: TRANSISTOR

Dear Mr. Lau:

You are named as an inventor in the above identified United States patent application, filed under the provisions of 37 CFR 1.47(a) and 35 U.S.C. 116. Should a patent be granted, you will be designated as an inventor. As a named inventor, you are entitled to inspect any paper in the file wrapper of the application, order copies of all or any part thereof (at a prepaid cost per 37 CFR 1.19) or to make your position of record in the application. Alternately, you may arrange to do any of the preceding through a registered patent agent or attorney presenting written authorization from you. If you care to join in the application, the law firm of record (see below) would presumably assist you. Joining in the application would entail the filing of the appropriate oath or declaration by you pursuant to 37 CFR 1.63.

Derek A. Putonen
Attorney Advisor
Office of PCT Legal Administration
Tel: (571) 272-3294

Counsel of record:
THOMPSON HINE L.L.P.
INTELLECTUAL PROPERTY GROUP
P.O. BOX 8801
DAYTON OH 45401-8801
UNITED STATES OF AMERICA

UNITED STATES PATENT AND TRADEMARK OFFICE

Commissioner for Patents
United States Patent and Trademark Office
P.O. Box 1450
Alexandria, VA 22313-1450
www.uspto.gov

Mr. Yong Hai Hu
9 Woodcands
DR 72 #08-23
738093
SINGAPORE

MAILED

APR 19 2011

PCT LEGAL ADMINISTRATION

In re Application of
HU, et al.
PCT No.: PCT/EP2009/051660
Application No.: 12/867,257
Int. Filing Date: 12 February 2009
Priority Date: 15 February 2008
Atty. Docket No.: 534334-00099
For: TRANSISTOR

Dear Mr. Hu:

You are named as an inventor in the above identified United States patent application, filed under the provisions of 37 CFR 1.47(a) and 35 U.S.C. 116. Should a patent be granted, you will be designated as an inventor. As a named inventor, you are entitled to inspect any paper in the file wrapper of the application, order copies of all or any part thereof (at a prepaid cost per 37 CFR 1.19) or to make your position of record in the application. Alternately, you may arrange to do any of the preceding through a registered patent agent or attorney presenting written authorization from you. If you care to join in the application, the law firm of record (see below) would presumably assist you. Joining in the application would entail the filing of the appropriate oath or declaration by you pursuant to 37 CFR 1.63.

Derek A. Putonen
Attorney Advisor
Office of PCT Legal Administration
Tel: (571) 272-3294

Counsel of record:
THOMPSON HINE L.L.P.
INTELLECTUAL PROPERTY GROUP
P.O. BOX 8801
DAYTON OH 45401-8801
UNITED STATES OF AMERICA

UNITED STATES PATENT AND TRADEMARK OFFICE

Commissioner for Patents
United States Patent and Trademark Office
9P.O. Box 1450
Alexandria, VA 22313-1450
www.uspto.gov

MAILED

OCT 29 2010

PCT LEGAL ADMINISTRATION

PAUL AND PAUL
2000 MARKET STREET
SUITE 2900
PHILADELPHIA PA 19103

In re Application of	:	
JENKINS, Robert L.	:	
Application No.: 12/867,290	:	
PCT No.: PCT/US2008/059631	:	
Int. Filing Date: 08 April 2008	:	DECISION
Priority Date: None	:	
Attorney Docket No.: 2010-084	:	
For: ROOFING ELEMENT WITH ...	:	
TO A ROOF	:	

This decision is in response to applicant's "Request to Correct International Application Number," filed in the United States Patent and Trademark Office on 25 August 2010. It has been treated as a petition under 37 CFR 1.182. The $400 fee for the petition will be charged to deposit account no. 16-0750, as authorized.

BACKGROUND

On 12 August 2010, applicant filed national phase entry papers indicating the filing was the national stage of PCT/US2008/059631, but supplied electronic data indicating the application was the national phase entry of PCT/US2009/059631.

On 25 August 2010, applicant filed this petition under 37 CFR 1.182 and indicated that the application was a national phase entry of PCT/US2008/059631.

DISCUSSION

A filing under 35 USC 371 is the national phase entry of only one international application. Applicant indicates that this application was intended to be the national phase of PCT/US2008/059631. Applicant has paid the required petition fee. The indications in this application will be corrected to indicate that this is a national phase of PCT/US2008/059631.

CONCLUSION

For the reasons discussed above, applicant's petition under 37 CFR 1.182 is **GRANTED**.

This application is being returned to the National Stage Processing Branch of the Office of Patent Application Processing for further action consistent with this decision.

/Erin P. Thomson/

Erin P. Thomson
Attorney Advisor
PCT Legal Administration

Telephone: 571-272-3292