Doc Code: PPH.PCT.652
Document Description: Petition to make special under PCT-Patent Pros Hwy

PTO/SB/20PCT-KR (06-10)
Approved for use through 01/31/2012. OMB 0651-0058
U.S. Patent and Trademark Office; U. S. DEPARTMENT OF COMMERCE
Under the Paperwork Reduction Act of 1995, no persons are required to respond to a collection of information unless it displays a valid OMB control number.

REQUEST FOR PARTICIPATION IN THE PATENT COOPERATION TREATY - PATENT PROSECUTION HIGHWAY (PCT-PPH) PILOT PROGRAM BETWEEN THE KOREAN INTELLECTUAL PROPERTY OFFICE (KIPO) AND THE USPTO

Application No:	12/882,556	Filing date:	September 15, 2010
First Named Inventor:	Jin Young CHUN		
Title of the Invention:	Method and Apparatus for transmitting Uplink Control Signal in Relay Station Cross-Reference to Related Applications		

THIS REQUEST FOR PARTICIPATION IN THE PCT-PPH PILOT PROGRAM ALONG WITH THE REQUIRED DOCUMENTS MUST BE SUBMITTED VIA EFS-WEB. INFORMATION REGARDING EFS-WEB IS AVAILABLE AT HTTP://WWW.USPTO.GOV/EBC/EFS_HELP.HTML

APPLICANT HEREBY REQUESTS PARTICIPATION IN THE PCT-PPH PROGRAM AND PETITIONS TO MAKE THE ABOVE-IDENTIFIED APPLICATION SPECIAL UNDER THE PCT-PPH PROGRAM.

The above-identified application is (1) a national stage entry of the corresponding PCT application, or (2) a national stage entry of another PCT application which claims priority to the corresponding PCT application, or (3) a national application that claims domestic/ foreign priority to the corresponding PCT application, or (4) a national application which forms the basis for the priority claim in the corresponding PCT application, or (5) a continuing application of a U.S. application that satisfies one of (1) to (4) above, or (6) a U.S. application that claims domestic benefit to a U.S. provisional application which forms the basis for the priority claim in the corresponding PCT application.

The corresponding PCT application number(s) is/are: PCT /KR2010/006226

The international filing date of the corresponding PCT application(s) is/are: 13 SEP 2010

I. List of Required Documents:

a. **A copy of the latest international work product (WO/ISA, WO/IPEA, or IPER) in the above–identified corresponding PCT application(s)**

☑ Is attached.

☐ Is not attached because the document is already in the U.S. application.

b. **A copy of all claims which were indicated as having novelty, inventive step and industrial applicability in the above-identified corresponding PCT application(s).**

☑ Is attached.

☐ Is not attached because the document is already in the U.S. application.

c. **English translations of the documents in a. and b. above are attached (if the documents are not in the English language). A statement that the English translation is accurate is attached for the document in b. above.**

This collection of information is required by 35 U.S.C. 119, 37 CFR 1.55, and 37 CFR 1.102(d). The information is required to obtain or retain a benefit by the public, which is to file (and by the USPTO to process) an application. Confidentiality is governed by 35 U.S.C. 122 and 37 CFR 1.11 and 1.14. This collection is estimated to take 2 hours to complete, including gathering, preparing, and submitting the completed application form to the USPTO. Time will vary depending upon the individual case. Any comments on the amount of time you require to complete this form and/or suggestions for reducing this burden should be sent to the Chief Information Officer, U.S. Patent and Trademark Office, U.S. Department of Commerce, P.O. Box 1450, Alexandria, VA 22313-1450. DO NOT SEND FEES OR COMPLETED FORMS TO THIS ADDRESS.

PTO/SB/20PCT-KR (06-10)
Approved for use through 01/31/2012. OMB 0651-0058
U.S.Patent and Trademark Office; U.S. DEPARTMENT OF COMMERCE
Under the Paperwork Reduction Act of 1995, no persons are required to respond to a collection of information unless it displays a valid OMB control number.

REQUEST FOR PARTICIPATION IN THE PCT-PPH PILOT PROGRAM BETWEEN THE KIPO AND THE USPTO

(continued)

Application No.:	12/882,556
First Named Inventor:	Jin Young CHIN

d. **(1) An information disclosure statement listing the documents cited in the international work products (ISR, WO/ISA, WO/IPEA, IPER) of the corresponding PCT application.**

☑ Is attached

☐ Has already been filed in the above-identified U.S. application on _____

(2) Copies of all documents (except) for U.S. patents or U.S. patent application publications)

☑ Are attached.

☐ Have already been filed in the above-identified U.S. application on _____

II. Claims Correspondence Table:

Claims in US Application	Patentable Claims in the corresponding PCT Application	Explanation regarding the correspondence
1-9	1-9	Same

III. All the claims in the US application sufficiently correspond to the patentable claims in the corresponding PCT application.

Signature /Robert J. Goodell/	Date June 24, 2011
Name (Print/Typed) Robert J. Goodell	Registration Number 41,040

UNITED STATES PATENT AND TRADEMARK OFFICE

UNITED STATES DEPARTMENT OF COMMERCE
United States Patent and Trademark Office
Address: COMMISSIONER FOR PATENTS
P.O. Box 1450
Alexandria, Virginia 22313-1450
www.uspto.gov

APPLICATION NO.	FILING DATE	FIRST NAMED INVENTOR	ATTORNEY DOCKET NO.	CONFIRMATION NO.
12/882,556	09/15/2010	Jin Young Chun	002027-5005	3155

9629 7590 07/25/2011

MORGAN LEWIS & BOCKIUS LLP (WA)
1111 PENNSYLVANIA AVENUE NW
WASHINGTON, DC 20004

EXAMINER	
ART UNIT	PAPER NUMBER
2469	

MAIL DATE	DELIVERY MODE
07/25/2011	PAPER

Please find below and/or attached an Office communication concerning this application or proceeding.

The time period for reply, if any, is set in the attached communication.

UNITED STATES PATENT AND TRADEMARK OFFICE

Commissioner for Patents
United States Patent and Trademark Office
P.O. Box 1450
Alexandria, VA 22313-1450
www.uspto.gov

MORGAN LEWIS & BOCKIUS LLP (WA)
1111 PENNSYLVANIA AVENUE NW
WASHINGTON DC 20004

In re Application of: Chun et al.
Application No. 12/882556
Filed: 09/15/10
For: METHOD AND APPARATUS FOR TRANSMITTING UPLINK CONTROL SIGNAL IN RELAY STATION

DECISION ON REQUEST TO PARTICIPATE IN PATENT PROSECUTION HIGHWAY PROGRAM AND PETITION TO MAKE SPECIAL UNDER 37 CFR 1.102(a)

This is a decision on the request to participate in the Patent Prosecution Highway (PPH) program and the petition under 37 CFR 1.102(a), filed June 24, 2011 to make the above-identified application special.

The petition is **DISMISSED.**

A grantable request to participate in the PPH program and petition to make special require:

(1) The U.S. application is
(a) a Paris Convention application which either
(i) validly claims priority under 35 U.S.C. 119(a) and 37 CFR 1.55 to one or more applications filed in the KIPO, or
(ii) validly claims priority to a PCT application that contains no priority claims,

Or

(b) a national stage application under the PCT (an application which entered the national stage in the U.S. from a PCT international application after compliance with 35 U.S.C. 371), which PCT application
(i) validly claims priority to an application filed in the KIPO, or
(ii) validly claims priority to a PCT application that contains no priority claims, or
(iii) contains no priority claim,

Or

(c) a so-called bypass application filed under 35 U.S.C. 111 (a) which validly claims benefit under 35 U.S.C. 120 to a PCT application, which PCT application
(i) validly claims priority to an application filed in the KIPO, or
(ii) validly claims priority to a PCT application that contains no priority claims, or
(iii) contains no priority claim.

Where the KIPO application that contains the allowable/patentable claims is not the same application for which priority is claimed in the U.S. application, applicant must identify the relationship between the KIPO application that contains the allowable/patentable claims and the KIPO priority application claimed in the U.S. application;

(2) Applicant must submit a copy of:
a. The allowable/patentable claim(s) from the KR application(s);
b. An English translation of the allowable/patentable claim(s), if the claims were published in a language other than English); and
c. A statement that the English translation is accurate;

(3) Applicant must:
a. Ensure all the claims in the U.S. application must sufficiently correspond or be amended to sufficiently correspond to the allowable/patentable claim(s) in the KIPO application(s) and
b. Submit a claim correspondence table in English;

(4) Examination of the U.S. application has not begun

(5) Applicant must submit:
a. A copy of all the office action(s) (which are relevant to patentability), excluding "Decision to Grant a Patent" from each of the KR application(s) containing the allowable/patentable claim(s);
b. An English language translation of the KIPO office action(s) (if the office action(s) are not in the English language); and
c. A statement that the English translation is accurate;

(6) Applicant must submit:
a. An IDS listing the documents cited by the KIPO examiner in the KIPO office
action (unless already filed in this application); and
b. Copies of all the documents cited in the KIPO office action, except U.S. patents
or U.S. patent application publications (unless already filed in this application); and

(7) The required petition fee under 37 CFR 1.17(h) if submitted before May of 2010.

The request to participate in the PPH pilot program and petition fails to meet item 2 of the requirements above. While a copy of the KIPO office action is found, a review of the file has failed to find the KIPO claims, and if not in English, a translation and a statement that the translation is accurate.

The Petition is **DISMISSED.**

Telephone inquiries concerning this decision should be directed to Tod Swann at 571-272-3612

All other inquiries concerning the examination or status of the application is accessible in the PAIR system at http://www.uspto.gov/ebc/index.html.

The application is being forwarded to the examiner for action on the merits commensurate with this decision.

___/Tod Swann/_____
Tod Swann
Quality Assurance Specialist
Technology Center 2400

PATENT
ATTORNEY DOCKET NO.: 002027-5005

IN THE UNITED STATES PATENT AND TRADEMARK OFFICE

In re Patent Application of:	)	
	)	
Jin Young CHUN et al.	)	Confirmation No.: 3155
	)	
Application No.: 12/882,556	)	Group Art Unit: 2469
	)	
Filed: September 15, 2010	)	Examiner: Unassigned
	)	
For: THREE-DIMENSIONAL IMAGE DISPLAY DEVICE AND METHOD OF DRIVING THE SAME	)	

Commissioner of Patents
U.S. Patent and Trademark Office
Alexandria, VA 22314

RESPONSE TO DECISION ON REQUEST FOR PARTICIPATION IN PCT PPH AND RENEWED REQUEST

On July 25, 2011, a Decision was mailed by the USPTO dismissing the request for participation in the PCT PPH pilot program. Based on a telephone voicemail on August 18, 2011, from Ms. Beatriz Prieto, who responded to the inquiry of Applicants' undersigned representative during the absence of Mr. Tod Swann, Applicants understand that they are given one opportunity with in a time period of one month or thirty days, whichever is longer from the mailing date of the decision to correct the deficiencies. Thus, Applicants submit this paper within such time period.

Specifically, Applicants attach a copy of the PCT Published Application for the corresponding PCT application serving as the basis of the PCT PPH Request. The PCT Published Application has the claims which were indicated as having novelty, inventive step and industrial application. The PCT application -- including the claims -- are in English.

In case of any confusion, the present request is a Request for Participation in the PCT PPH as set forth in 1355 OG 319. [http://www.uspto.gov/patents/law/notices/pct_pph_kipo.pdf or http://www.uspto.gov/web/offices/com/sol/og/2010/week26/TOC.htm#ref12] Applicants believe that scenario E2 describes the present relationship.

If for any reason the Office cannot accept this paper as a response to correct the deficiencies or a renewed petition, then the Office is requested to accept this paper as a new Request.

Applicants believe that no fees are due in connection with the filing of this paper. However, if any fees are deemed to be due, such fees may be charged to Deposit Account No. 50-0310.

Respectfully submitted,

MORGAN, LEWIS & BOCKIUS LLP

/Robert J. Goodell/

By: _____
Robert J. Goodell
Reg. No. 41,040

Dated: August 24, 2011

CUSTOMER NO. 009629
MORGAN, LEWIS & BOCKIUS LLP
1111 Pennsylvania Avenue, NW
Washington, D.C. 20004
Tel.: (202) 739-3000
Fax: (202) 739-3001

Doc Code: PPH.PCT.652
Document Description: Petition to make special under PCT-Patent Pros Hwy

PTO/SB/20PCT-KR (06-10)
Approved for use through 01/31/2012. OMB 0651-0058
U.S. Patent and Trademark Office; U. S. DEPARTMENT OF COMMERCE
Under the Paperwork Reduction Act of 1995, no persons are required to respond to a collection of information unless it displays a valid OMB control number.

REQUEST FOR PARTICIPATION IN THE PATENT COOPERATION TREATY - PATENT PROSECUTION HIGHWAY (PCT-PPH) PILOT PROGRAM BETWEEN THE KOREAN INTELLECTUAL PROPERTY OFFICE (KIPO) AND THE USPTO

Application No:	12/882,556	Filing date:	September 15, 2010
First Named Inventor:	Jin Young CHUN		
Title of the Invention:	Method and Apparatus for transmitting Uplink Control Signal in Relay Station Cross-Reference to Related Applications		

THIS REQUEST FOR PARTICIPATION IN THE PCT-PPH PILOT PROGRAM ALONG WITH THE REQUIRED DOCUMENTS MUST BE SUBMITTED VIA EFS-WEB. INFORMATION REGARDING EFS-WEB IS AVAILABLE AT HTTP://WWW.USPTO.GOV/EBC/EFS_HELP.HTML

APPLICANT HEREBY REQUESTS PARTICIPATION IN THE PCT-PPH PROGRAM AND PETITIONS TO MAKE THE ABOVE-IDENTIFIED APPLICATION SPECIAL UNDER THE PCT-PPH PROGRAM.

The above-identified application is (1) a national stage entry of the corresponding PCT application, or (2) a national stage entry of another PCT application which claims priority to the corresponding PCT application, or (3) a national application that claims domestic/ foreign priority to the corresponding PCT application, or (4) a national application which forms the basis for the priority claim in the corresponding PCT application, or (5) a continuing application of a U.S. application that satisfies one of (1) to (4) above, or (6) a U.S. application that claims domestic benefit to a U.S. provisional application which forms the basis for the priority claim in the corresponding PCT application.

The corresponding PCT application number(s) is/are: PCT /KR2010/006226

The international filing date of the corresponding PCT application(s) is/are: 13 SEP 2010

I. List of Required Documents:

a. **A copy of the latest international work product (WO/ISA, WO/IPEA, or IPER) in the above–identified corresponding PCT application(s)**

☑ Is attached.

☐ Is not attached because the document is already in the U.S. application.

b. **A copy of all claims which were indicated as having novelty, inventive step and industrial applicability in the above-identified corresponding PCT application(s).**

☑ Is attached.

☐ Is not attached because the document is already in the U.S. application.

c. **English translations of the documents in a. and b. above are attached (if the documents are not in the English language). A statement that the English translation is accurate is attached for the document in b. above.**

This collection of information is required by 35 U.S.C. 119, 37 CFR 1.55, and 37 CFR 1.102(d). The information is required to obtain or retain a benefit by the public, which is to file (and by the USPTO to process) an application. Confidentiality is governed by 35 U.S.C. 122 and 37 CFR 1.11 and 1.14. This collection is estimated to take 2 hours to complete, including gathering, preparing, and submitting the completed application form to the USPTO. Time will vary depending upon the individual case. Any comments on the amount of time you require to complete this form and/or suggestions for reducing this burden should be sent to the Chief Information Officer, U.S. Patent and Trademark Office, U.S. Department of Commerce, P.O. Box 1450, Alexandria, VA 22313-1450. DO NOT SEND FEES OR COMPLETED FORMS TO THIS ADDRESS.

PTO/SB/20PCT-KR (06-10)
Approved for use through 01/31/2012. OMB 0651-0058
U.S.Patent and Trademark Office; U.S. DEPARTMENT OF COMMERCE
Under the Paperwork Reduction Act of 1995, no persons are required to respond to a collection of information unless it displays a valid OMB control number.

REQUEST FOR PARTICIPATION IN THE PCT-PPH PILOT PROGRAM BETWEEN THE KIPO AND THE USPTO

(continued)

Application No.:	12/882,556
First Named Inventor:	Jin Young CHIN

d. **(1) An information disclosure statement listing the documents cited in the international work products (ISR, WO/ISA, WO/IPEA, IPER) of the corresponding PCT application.**

☐ Is attached

☑ Has already been filed in the above-identified U.S. application on June 24, 2011

(2) Copies of all documents (except) for U.S. patents or U.S. patent application publications)

☐ Are attached.

☑ Have already been filed in the above-identified U.S. application on June 24, 2011

II. Claims Correspondence Table:

Claims in US Application	Patentable Claims in the corresponding PCT Application	Explanation regarding the correspondence
1-9	1-9	Same

III. All the claims in the US application sufficiently correspond to the patentable claims in the corresponding PCT application.

Signature /Robert J. Goodell/	Date August 24, 2011
Name (Print/Typed) Robert J. Goodell	Registration Number 41,040

Privacy Act Statement

The **Privacy Act of 1974 (P.L. 93-579)** requires that you be given certain information in connection with your submission of the attached form related to a patent application or patent. Accordingly, pursuant to the requirements of the Act, please be advised that: (1) the general authority for the collection of this information is 35 U.S.C. 2(b)(2); (2) furnishing of the information solicited is voluntary; and (3) the principal purpose for which the information is used by the U.S. Patent and Trademark Office is to process and/or examine your submission related to a patent application or patent. If you do not furnish the requested information, the U.S. Patent and Trademark Office may not be able to process and/or examine your submission, which may result in termination of proceedings or abandonment of the application or expiration of the patent.

The information provided by you in this form will be subject to the following routine uses:

1. The information on this form will be treated confidentially to the extent allowed under the Freedom of Information Act (5 U.S.C. 552) and the Privacy Act (5 U.S.C 552a). Records from this system of records may be disclosed to the Department of Justice to determine whether disclosure of these records is required by the Freedom of Information Act.
2. A record from this system of records may be disclosed, as a routine use, in the course of presenting evidence to a court, magistrate, or administrative tribunal, including disclosures to opposing counsel in the course of settlement negotiations.
3. A record in this system of records may be disclosed, as a routine use, to a Member of Congress submitting a request involving an individual, to whom the record pertains, when the individual has requested assistance from the Member with respect to the subject matter of the record.
4. A record in this system of records may be disclosed, as a routine use, to a contractor of the Agency having need for the information in order to perform a contract. Recipients of information shall be required to comply with the requirements of the Privacy Act of 1974, as amended, pursuant to 5 U.S.C. 552a(m).
5. A record related to an International Application filed under the Patent Cooperation Treaty in this system of records may be disclosed, as a routine use, to the International Bureau of the World Intellectual Property Organization, pursuant to the Patent Cooperation Treaty.
6. A record in this system of records may be disclosed, as a routine use, to another federal agency for purposes of National Security review (35 U.S.C. 181) and for review pursuant to the Atomic Energy Act (42 U.S.C. 218(c)).
7. A record from this system of records may be disclosed, as a routine use, to the Administrator, General Services, or his/her designee, during an inspection of records conducted by GSA as part of that agency's responsibility to recommend improvements in records management practices and programs, under authority of 44 U.S.C. 2904 and 2906. Such disclosure shall be made in accordance with the GSA regulations governing inspection of records for this purpose, and any other relevant (*i.e.*, GSA or Commerce) directive. Such disclosure shall not be used to make determinations about individuals.
8. A record from this system of records may be disclosed, as a routine use, to the public after either publication of the application pursuant to 35 U.S.C. 122(b) or issuance of a patent pursuant to 35 U.S.C. 151. Further, a record may be disclosed, subject to the limitations of 37 CFR 1.14, as a routine use, to the public if the record was filed in an application which became abandoned or in which the proceedings were terminated and which application is referenced by either a published application, an application open to public inspection or an issued patent.
9. A record from this system of records may be disclosed, as a routine use, to a Federal, State, or local law enforcement agency, if the USPTO becomes aware of a violation or potential violation of law or regulation.

PATENT COOPERATION TREATY

From the INTERNATIONAL SEARCHING AUTHORITY

To:

YANG Moon Ock

ESSEN Patent & Law Firm 2F, Samheung Yeoksam Bldg. 735-10 Yeoksam-dong Gangnam-gu seoul 135-080 Republic of Korea

PCT

NOTIFICATION OF TRANSMITTAL OF THE INTERNATIONAL SEARCH REPORT AND THE WRITTEN OPINION OF THE INTERNATIONAL SEARCHING AUTHORITY, OR THE DECLARATION

(PCT Rule 44.1)

	Date of mailing *(day/month/year)* 23 MAY 2011 (23.05.2011)
Applicant's or agent's file reference BPP2010-0159	**FOR FURTHER ACTION** See paragraphs 1 and 4 below
International application No. **PCT/KR2010/006226**	International filing date *(day/month/year)* **13 SEPTEMBER 2010 (13.09.2010)**
Applicant **LG ELECTRONICS INC. et al**	

1. ☒ The applicant is hereby notified that the international search report and the written opinion of the International Searching Authority have been established and are transmitted herewith.

   Filing of amendments and statement under Article 19:

   The applicant is entitled, if he so wishes, to amend the claims of the international application (see Rule 46):

   When? The time limit for filing such amendments is normally two months from the date of transmittal of the international search report.

   Where? Directly to the International Bureau of WIPO, 34 chemin des Colombettes 1211 Geneva 20, Switzerland, Facsimile No.: +41 22 338 82 70

   For more detailed instructions, see *PCT Applicant's Guide*, International Phase, paragraphs 9.004 . 9.011.

2. ☐ The applicant is hereby notified that no international search report will be established and that the declaration under Article 17(2)(a) to that effect and the written opinion of the International Searching Authority are transmitted herewith.

3. ☐ **With regard to any protest** against payment of (an) additional fee(s) under Rule 40.2, the applicant is notified that:

   ☐ the protest together with the decision thereon has been transmitted to the International Bureau together with any request to forward the texts of both the protest and the decision thereon to the designated Offices.

   ☐ no decision has been made yet on the protest; the applicant will be notified as soon as a decision is made.

4. **Reminders**

The applicant may submit comments on an informal basis on the written opinion of the International Searching Authority to the International Bureau. The International Bureau will send a copy of such comments to all designated Offices unless an international preliminary examination report has been or is to be established. Following the expiration of 30 months from the priority date, these comments will also be made available to the public.

Shortly after the expiration of **18 months** from the priority date, the international application will be published by the International Bureau. If the applicant wishes to avoid or postpone publication, a notice of withdrawal of the international application, or of the priority claim, must reach the International Bureau before the completion of the technical preparations for international publication (Rules 90bis.1 and 90bis.3).

Within **19 months** from the priority date, but only in respect of some designated Offices, a demand for international preliminary examination must be filed if the applicant wishes to postpone the entry into the national phase **until 30 months** from the priority date (in some Offices even later); otherwise, the applicant must, **within 20 months** from the priority date, perform the prescribed acts for entry into the national phase before those designated Offices.

In respect of other designated Offices, the time limit of **30 months** (or later) will apply even if no demand is filed within 19months.

For details about the applicable time limits, Office by Office, see www.wipo.int/pct/en/texts/time_limits.html and the PCT Applicant's Guide, National Chapters.

Name and mailing address of the ISA/KR Korean Intellectual Property Office Government Complex-Daejeon, 189 Cheongsa-ro, Seo-gu, Daejeon 302-701, Republic of Korea	Authorized officer COMMISSIONER
Facsimile No. 82-42-472-7140	Telephone No. 82-42-481-8754

* Attention

Copies of the documents cited in the international search report can be searched in the following Korean Intellectual Property Office English website for three months from the date of mailing of the international search report.

http://www.kipo.go.kr/en/ => PCT Services => PCT Services

ID : PCT international application number
PW : **BPDNPQ1U**

PATENT COOPERATION TREATY

From the
INTERNATIONAL SEARCHING AUTHORITY

To:
YANG Moon Ock

S&IP Patent & Law Firm 2F, Samheung Yeoksam Bldg. 735-10 Yeoksam-dong Gangnam-gu seoul 135-080 Republic of Korea

PCT

WRITTEN OPINION OF THE INTERNATIONAL SEARCHING AUTHORITY

(PCT Rule 43bis.1)

Date of mailing *(day/month/year)*	**23 MAY 2011 (23.05.2011)**
Applicant's or agent's file reference BPP2010-0159	**FOR FURTHER ACTION** See paragraph 2 below

International application No.	International filing date *(day/month/year)*	Priority date *(day/month/year)*
PCT/KR2010/006226	**13 SEPTEMBER 2010 (13.09.2010)**	16 SEPTEMBER 2009 (16.09.2009)

International Patent Classification (IPC) or both national classification and IPC

H04B 7/14(2006.01)i, H04W 72/04(2009.01)i

Applicant

LG ELECTRONICS INC. et al

1. This opinion contains indications relating to the following items:

- ☒ Box No. I Basis of the opinion
- ☐ Box No. II Priority
- ☐ Box No. III Non-establishment of opinion with regard to novelty, inventive step and industrial applicability
- ☐ Box No. IV Lack of unity of invention
- ☒ Box No. V Reasoned statement under Rule 43bis.1(a)(i) with regard to novelty, inventive step or industrial applicability; citations and explanations supporting such statement
- ☐ Box No. VI Certain documents cited
- ☐ Box No. VII Certain defects in the international application
- ☐ Box No. VIII Certain observations on the international application

2. **FURTHER ACTION**

If a demand for international preliminary examination is made, this opinion will be considered to be a written opinion of the International Preliminary Examining Authority ("IPEA") except that this does not apply where the applicant chooses an Authority other than this one to be the IPEA and the chosen IPEA has notified the International Bureau under Rule 66.1bis(b) that written opinions of this International Searching Authority will not be so considered.

If this opinion is, as provided above, considered to be a written opinion of the IPEA, the applicant is invited to submit to the IPEA a written reply together, where appropriate, with amendments, before the expiration of 3 months from the date of mailing of Form PCT/ISA/220 or before the expiration of 22 months from the priority date, whichever expires later.
For further options, see Form PCT/ISA/220.

3. For further details, see notes to Form PCT/ISA/220.

Name and mailing address of the ISA/KR	Date of completion of this opinion	Authorized officer
Korean Intellectual Property Office Government Complex-Daejeon, 189 Cheongsa-ro, Seo-gu, Daejeon 302-701, Republic of Korea Facsimile No. 82-42-472-7140	20 MAY 2011 (20.05.2011)	KIM, Byoung Sung Telephone No.82-42-481-5652

WRITTEN OPINION OF THE INTERNATIONAL SEARCHING AUTHORITY

International application No.
PCT/KR2010/006226

Box No. I Basis of this opinion

1. With regard to the **language**, this opinion has been established on the basis of:

   ☒ the international application in the language in which it was filed

   ☐ a translation of the international application into _____, which is the language of a translation furnished for the purposes of international search (Rules 12.3(a) and 23.1(b))

2. ☐ This opinion has been established taking into account the **rectification of an obvious mistake** authorized by or notified to this Authority under Rule 91 (Rule 43*bis*.1(a))

3. With regard to any **nucleotide and/or amino acid sequence** disclosed in the international application, this opinion has been established on the basis of:

   a. a sequence listing filed or furnished
      ☐ on paper
      ☐ in electronic form

   b. time of filing or furnishing
      ☐ contained in the international application as filed.
      ☐ filed together with the international application in electronic form.
      ☐ furnished subsequently to this Authority for the purposes of search.

4. ☐ In addition, in the case that more than one version or copy of a sequence listing has been filed or furnished, the required statements that the information in the subsequent or additioanl copies is identical to that in the application as filed or does not go beyond the application as filed, as appropriate, were furnished.

5. Additional comments:

WRITTEN OPINION OF THE INTERNATIONAL SEARCHING AUTHORITY

International application No.
PCT/KR2010/006226

Box No. V Reasoned statement under Rule 43bis.1(a)(i) with regard to novelty, inventive step or industrial applicability; citations and explanations supporting such statement

1. Statement

Novelty (N)	Claims	1-9	YES
	Claims	NONE	NO
Inventive step (IS)	Claims	1-9	YES
	Claims	NONE	NO
Industrial applicability (IA)	Claims	1-9	YES
	Claims	NONE	NO

2. Citations and explanations :

Reference is made to the following documents:

D1: Shkumbin Hamiti, "The Draft IEEE 802.16m System Description Document," IEEE 802.16m-08/003r3, 16 June 2008

D2: J. Sydir, et al., "An evolved cellular system architecture incorporating relay stations," IEEE Communications Magazine, pp. 115-121, June 2009

D3: S.W. Peters, et al., "The future of WiMAX: multihop relaying with IEEE 802.16j," IEEE Communications Magazine, pp. 104-111, January 2009

D4: US 2008-0165881 A1 (TAO ZHIFENG et al.) 10 July 2008

Novelty and Inventive Step

The present invention proposes a method of transmitting an uplink (UL) control signal of a relay station. Specifically, the method of claim 1 includes the steps of: (a1) configuring a resource unit comprising a plurality of symbols and a plurality of subcarriers to allocate the UL control signal in a subframe of a UL relay zone, (b1) transmitting the UL control signal by using the resource unit, wherein, if a transition gap required for switching of signal transmission and reception of the relay station is included in the subframe, the UL control signal is transmitted in the remaining symbols other than the plurality of symbols constituting the resource unit including the transition gap.

D1 to D4 respectively disclose frame structures for transmitting/receiving a signal in a wireless communications system using a relay station. However, none of the prior arts, D1 to D4, teach or fairly suggest the steps of claim 1. And the technical feature of claim 1 cannot be easily derived from each prior art or any combination of said prior arts by one skilled in the art. Hence, the subject matter of claim 1 is considered to be novel and to involve an inventive step in the sense of PCT Article 33(2),(3).

(Continued on Supplemental Box)

Supplemental Box

In case **the space in any of the preceding boxes is not sufficient.**
Continuation of :

Box No. V

Independent claim 7 relates to a method of transmitting an uplink (UL) control signal of a relay station, which includes the steps of: (a2) configuring a resource unit comprising a plurality of symbols and a plurality of subcarriers to allocate the UL control signal in a subframe of a UL relay zone, (b2) transmitting the UL control signal by using the resource unit, wherein, if a transition gap required for switching of signal transmission and reception of the relay station is included in the subframe, the resource unit has a frequency or time different from that of a resource unit by which a mobile station transmits the UL control signal to a base station. None of the prior arts, D1 to D4, teach or fairly suggest the steps of claim 7. And the technical feature of claim 7 cannot be easily derived from each prior art or any combination of said prior arts by one skilled in the art. Hence, the subject matter of claim 7 is considered to be novel and to involve an inventive step in the sense of PCT Article 33(2),(3).

Independent claim 8 relates to a relay station. The functions of claim 8 simply correspond to the steps of claim 1. So, the subject matter of claim 8 is considered to be novel and to involve an inventive step in the sense of PCT Article 33(2),(3).

Independent claim 9 relates to a relay station. The functions of claim 9 simply correspond to the steps of claim 7. So, the subject matter of claim 9 is considered to be novel and to involve an inventive step in the sense of PCT Article 33(2),(3).

Therefore, the subject matter of claims 1~9, including all dependent claims, meets the criteria set out in PCT Article 33(2),(3).

Industrial Applicability

Claims 1~9 are industrially applicable under PCT Article 33(4).

PATENT COOPERATION TREATY

PCT

INTERNATIONAL SEARCH REPORT

(PCT Article 18 and Rules 43 and 44)

Applicant's or agent's file reference	**FOR FURTHER ACTION**	see Form PCT/ISA/220 as well as, where applicable, item 5 below.
BPP2010-0159		
International application No.	International filing date *(day/month/year)*	(Earliest) Priority Date *(day/month/year)*
PCT/KR2010/006226	**13 SEPTEMBER 2010 (13.09.2010)**	16 SEPTEMBER 2009 (16.09.2009)
Applicant		
LG ELECTRONICS INC. et al		

This International search report has been prepared by this International Searching Authority and is transmitted to the applicant according to Article 18. A copy is being transmitted to the International Bureau.

This international search report consists of a total of **3** sheets.

☐ It is also accompanied by a copy of each prior art document cited in this report.

1. **Basis of the report**
   a. With regard to the **language**, the international search was carried out on the basis of:
      ☒ the international application in the language in which it was filed
      ☐ a translation of the international application into _____, which is the language of a translation furnished for the purposes of international search (Rules 12.3(a) and 23.1(b))
   b. ☐ This international search report has been established taking into account the **rectification of an obvious mistake** authorized by or notified to this Authority under Rule 91 (Rule 43.6*bis*(a)).
   c. ☐ With regard to any **nucleotide and/or amino acid sequence** disclosed in the international application, see Box No. I.
2. ☐ **Certain claims were found unsearchable** (See Box No. II)
3. ☐ **Unity of invention is lacking** (See Box No. III)
4. With regard to the **title,**
   ☒ the text is approved as submitted by the applicant.
   ☐ the text has been established by this Authority to read as follows:
5. With regard to the **abstract,**
   ☒ the text is approved as submitted by the applicant.
   ☐ the text has been established, according to Rule 38.2, by this Authority as it appears in Box No. IV. The applicant may, within one month from the date of mailing of this international search report, submit comments to this Authority.
6. With regard to the drawings,
   a. the figure of the **drawings** to be published with the abstract is Figure No. **14**
      ☒ as suggested by the applicant.
      ☐ as selected by this Authority, because the applicant failed to suggest a figure.
      ☐ as selected by this Authority, because this figure better characterizes the invention.
   b. ☐ none of the figure is to be published with the abstract.

INTERNATIONAL SEARCH REPORT

International application No.
PCT/KR2010/006226

A. CLASSIFICATION OF SUBJECT MATTER

H04B 7/14(2006.01)i, H04W 72/04(2009.01)i

According to International Patent Classification (IPC) or to both national classification and IPC

B. FIELDS SEARCHED

Minimum documentation searched (classification system followed by classification symbols)
H04B 7/14; H04B 7/02; H04W 72/04

Documentation searched other than minimum documentation to the extent that such documents are included in the fields searched
Korean utility models and applications for utility models
Japanese utility models and applications for utility models

Electronic data base consulted during the international search (name of data base and, where practicable, search terms used)
eKOMPASS(KIPO internal) & Keywords: relay, zone, uplink, control, transition gap

C. DOCUMENTS CONSIDERED TO BE RELEVANT

Category*	Citation of document, with indication, where appropriate, of the relevant passages	Relevant to claim No.
A	Shkumbin Hamiti, "The Draft IEEE 802.16m System Description Document," IEEE 802.16m-08/003r3, 16 June 2008 See section 11.4 "Frame structure" (page 25 - page 36)	1-9
A	J. Sydir, et al., "An evolved cellular system architecture incorporating relay stations," IEEE Communications Magazine, pp. 115-121, June 2009 See page 118 - page 120; figures 4 and 5.	1-9
A	S.W. Peters, et al., "The future of WiMAX: multihop relaying with IEEE 802.16j," IEEE Communications Magazine, pp. 104-111, January 2009 See page 109; figure 3.	1-9
A	US 2008-0165881 A1 (TAO ZHIFENG et al.) 10 July 2008 See abstract; claim 1 and figure 3B.	1-9

☐ Further documents are listed in the continuation of Box C.

☒ See patent family annex.

* Special categories of cited documents:
"A" document defining the general state of the art which is not considered to be of particular relevance
"E" earlier application or patent but published on or after the international filing date
"L" document which may throw doubts on priority claim(s) or which is cited to establish the publication date of citation or other special reason (as specified)
"O" document referring to an oral disclosure, use, exhibition or other means
"P" document published prior to the international filing date but later than the priority date claimed
"T" later document published after the international filing date or priority date and not in conflict with the application but cited to understand the principle or theory underlying the invention
"X" document of particular relevance; the claimed invention cannot be considered novel or cannot be considered to involve an inventive step when the document is taken alone
"Y" document of particular relevance; the claimed invention cannot be considered to involve an inventive step when the document is combined with one or more other such documents,such combination being obvious to a person skilled in the art
"&" document member of the same patent family

Date of the actual completion of the international search	Date of mailing of the international search report
20 MAY 2011 (20.05.2011)	**23 MAY 2011 (23.05.2011)**

Name and mailing address of the ISA/KR
Korean Intellectual Property Office
Government Complex-Daejeon, 189 Cheongsa-ro,
Seo-gu, Daejeon 302-701, Republic of Korea
Facsimile No. 82-42-472-7140

Authorized officer
KIM, Byoung Sung
Telephone No. 82-42-481-5652

Form PCT/ISA/210 (second sheet) (July 2009)

INTERNATIONAL SEARCH REPORT

Information on patent family members

International application No.
PCT/KR2010/006226

Patent document cited in search report	Publication date	Patent family member(s)	Publication date
US 2008-0165881 A1	10.07.2008	CN 101536363 A	16.09.2009
		EP 2060032 A1	20.05.2009
		JP 2009-544175 A	10.12.2009
		KR 10-2009-0097962 A	16.09.2009
		WO 2008-084748 A1	17.07.2008

(12) INTERNATIONAL APPLICATION PUBLISHED UNDER THE PATENT COOPERATION TREATY (PCT)

(19) World Intellectual Property Organization
International Bureau

(43) International Publication Date
24 March 2011 (24.03.2011)

PCT

(10) International Publication Number
WO 2011/034318 A2

(51) International Patent Classification:
H04B 7/14 (2006.01) *H04W 72/04* (2009.01)

(21) International Application Number:
PCT/KR2010/006226

(22) International Filing Date:
13 September 2010 (13.09.2010)

(25) Filing Language: English

(26) Publication Language: English

(30) Priority Data:
61/242,803 16 September 2009 (16.09.2009) US
61/245,131 23 September 2009 (23.09.2009) US
10-2010-0030930 5 April 2010 (05.04.2010) KR

(71) Applicant *(for all designated States except US)*: **LG ELECTRONICS INC.** [KR/KR]; 20 Yeouido-dong Yeongdeungpo-gu, Seoul 150-721 (KR).

(72) Inventors; and

(75) Inventors/Applicants *(for US only)*: **CHUN, Jin Young** [KR/KR]; LG R&D Complex, 533 Hogye 1-dong Dongan-gu, Anyang-si Gyeonggi-do 431-749 (KR). **CHO, Han Gyu** [KR/KR]; LG R&D Complex, 533 Hogye 1-dong Dongan-gu, Anyang-si Gyeonggi-do 431-749 (KR). **LIM, Dong Guk** [KR/KR]; LG R&D Complex, 533 Hogye 1-dong Dongan-gu, Anyang-si Gyeonggi-do 431-749 (KR). **IHM, Bin Chul** [KR/KR]; LG R&D Complex, 533 Hogye 1-dong Dongan-gu, Anyang-si Gyeonggi-do 431-749 (KR). **KWAK, Jin Sam** [KR/KR]; LG R&D Complex, 533 Hogye 1-dong Dongan-gu, Anyang-si Gyeonggi-do 431-749 (KR).

(74) Agent: **YANG, Moon Ock**; Essen Patent & Law Firm, 2F. Samheung Yeoksam Bldg., 735-10 Yeoksam-dong, Gangnam-gu, Seoul 135-080 (KR).

(81) Designated States *(unless otherwise indicated, for every kind of national protection available)*: AE, AG, AL, AM, AO, AT, AU, AZ, BA, BB, BG, BH, BR, BW, BY, BZ, CA, CH, CL, CN, CO, CR, CU, CZ, DE, DK, DM, DO, DZ, EC, EE, EG, ES, FI, GB, GD, GE, GH, GM, GT, HN, HR, HU, ID, IL, IN, IS, JP, KE, KG, KM, KN, KP, KZ, LA, LC, LK, LR, LS, LT, LU, LY, MA, MD, ME, MG, MK, MN, MW, MX, MY, MZ, NA, NG, NI, NO,

[Continued on next page]

(54) Title: METHOD AND APPARATUS FOR TRANSMITTING UPLINK CONTROL SIGNAL IN RELAY STATION

[Fig. 14]

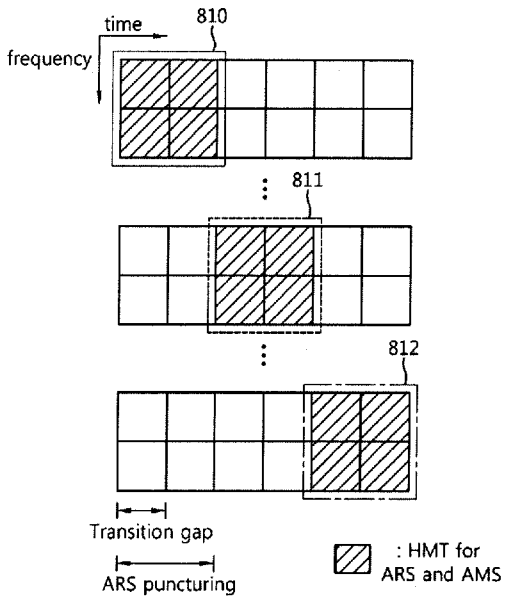

(57) Abstract: A method of transmitting an uplink (UL) control signal of a relay station is provided. The method includes: configuring a UL relay zone for transmitting a signal by the relay station to a base station in a frame; configuring a resource unit including a plurality of symbols and a plurality of subcarriers to allocate the UL control signal in a subframe of the UL relay zone; and transmitting the UL control signal by using the resource unit, wherein, if a transition gap required for switching of signal transmission and reception of the relay station is included in the subframe, the UL control signal is transmitted in the remaining symbols other than the plurality of symbols constituting the resource unit including the transition gap.

WO 2011/034318 A2

NZ, OM, PE, PG, PH, PL, PT, RO, RS, RU, SC, SD, SE, SG, SK, SL, SM, ST, SV, SY, TH, TJ, TM, TN, TR, TT, TZ, UA, UG, US, UZ, VC, VN, ZA, ZM, ZW.

(84) **Designated States** *(unless otherwise indicated, for every kind of regional protection available)*: ARIPO (BW, GH, GM, KE, LR, LS, MW, MZ, NA, SD, SL, SZ, TZ, UG, ZM, ZW), Eurasian (AM, AZ, BY, KG, KZ, MD, RU, TJ, TM), European (AL, AT, BE, BG, CH, CY, CZ, DE, DK, EE, ES, FI, FR, GB, GR, HR, HU, IE, IS, IT, LT, LU, LV, MC, MK, MT, NL, NO, PL, PT, RO, SE, SI, SK, SM, TR), OAPI (BF, BJ, CF, CG, CI, CM, GA, GN, GQ, GW, ML, MR, NE, SN, TD, TG).

Published:

— *without international search report and to be republished upon receipt of that report (Rule 48.2(g))*

Description

Title of Invention: METHOD AND APPARATUS FOR TRANSMITTING UPLINK CONTROL SIGNAL IN RELAY STATION

Technical Field

[0001] The present invention relates to wireless communications, and more particularly, to a method and apparatus for transmitting an uplink control signal of a relay station in a wireless communication system.

Background Art

[0002] The institute of electrical and electronics engineers (IEEE) 802.16e standard was adopted in 2007 as a sixth standard for international mobile telecommunication (IMT)-2000 in the name of 'WMAN-OFDMA ' by the ITU-radio communication sector (ITU-R) which is one of sectors of the international telecommunication union (ITU). An IMT-advanced system has been prepared by the ITU-R as a next generation (i.e., 4th generation) mobile communication standard following the IMT-2000. It was determined by the IEEE 802.16 working group (WG) to conduct the 802.16m project for the purpose of creating an amendment standard of the existing IEEE 802.16e as a standard for the IMT-advanced system. As can be seen in the purpose above, the 802.16m standard has two aspects, that is, continuity from the past (i.e., the amendment of the existing 802.16e standard) and continuity to the future (i.e., the standard for the next generation IMT-advanced system). Therefore, the 802.16m standard needs to satisfy all requirements for the IMT-advanced system while maintaining compatibility with a mobile WiMAX system conforming to the 802.16e standard.

[0003] An orthogonal frequency division multiplexing (OFDM) system capable of reducing inter-symbol interference (ISI) with a low complexity is taken into consideration as one of next generation wireless communication systems. In the OFDM, a serially input data symbol is converted into N parallel data symbols, and is then transmitted by being carried on each of separated N subcarriers. The subcarriers maintain orthogonality in a frequency dimension. Each orthogonal channel experiences mutually independent frequency selective fading, and an interval of a transmitted symbol is increased, thereby minimizing inter-symbol interference. In a system using the OFDM as a modulation scheme, orthogonal frequency division multiple access (OFDMA) is a multiple access scheme in which multiple access is achieved by independently providing some of available subcarriers to a plurality of users. In the OFDMA, frequency resources (i.e., subcarriers) are provided to the respective users, and the re-

spective frequency resources do not overlap with one another in general since they are independently provided to the plurality of users. Consequently, the frequency resources are allocated to the respective users in a mutually exclusive manner.

[0004] In an OFDMA system, frequency diversity for multiple users can be obtained by using frequency selective scheduling, and subcarriers can be allocated variously according to a permutation rule for the subcarriers. In addition, a spatial multiplexing scheme using multiple antennas can be used to increase efficiency of a spatial domain. In order to support the various schemes described above, a control signal must be transmitted between a mobile station (MS) and a base station (BS). Examples of the control signal include a channel quality indicator (CQI) for reporting a channel state from the MS to the BS, an acknowledgement/not-acknowledgement (ACK/NACK) signal in response to data transmission, a bandwidth request signal for requesting allocation of a radio resource, precoding information in a multiple antenna system, antenna information, etc. The control signal is transmitted through a control channel.

[0005] Meanwhile, a wireless communication system employing a relay station (RS) has recently been developed. The RS is employed for cell coverage extension and transmission capability improvement. A BS provides a service to an MS located in a coverage boundary of the BS via the RS, and thus can obtain an effect of extending the cell coverage. In addition, the RS improves signal transmission reliability between the BS and the MS, thereby improving transmission capacity. Even if the MS is located inside the coverage of the BS, the RS may be used when the MS is located in a shadow area.

[0006] The wireless communication system employing the RS requires a new frame structure different from the conventional frame structure. A frequency band used when the RS transmits a signal to the BS may be equal to a frequency band at which a signal is received from a relay MS. Alternatively, the frequency band used when the RS receives the signal from the BS may be equal to a frequency band at which a signal is transmitted to the relay MS. Due to self interference, it is difficult for the RS to simultaneously perform transmission and reception of a signal at the same frequency band. Therefore, a time for switching an operation mode between transmission and reception of the signal is required. In general, it is assumed that the RS cannot transmit or receive the signal during the operation mode switching time. Some subframes included in an RS frame may include a symbol used as a transition gap by considering the operation mode switching time. In this symbol, the RS cannot transmit an uplink control signal.

[0007] Therefore, when the conventional method of transmitting the uplink control signal between the BS and the MS is equally used between the BS and the RS, a problem may occur due to the transition gap. For example, there may be a problem in multiplexing of an uplink control signal transmitted by the RS and an uplink control signal

transmitted by the MS or in maintaining orthogonality of multiplexed signals.

[0008] Accordingly, there is a need for a method of transmitting the uplink control signal by the RS to the BS in the RS frame including the transition gap.

Summary of Invention

Technical Problem

[0009] The present invention provides a method and apparatus for transmitting an uplink control signal of a relay station.

Solution to Problem

[0010] According to an aspect of the present invention, a method of transmitting an uplink (UL) control signal of a relay station is provided. The method includes: configuring a UL relay zone for transmitting a signal by the relay station to a base station in a frame; configuring a resource unit including a plurality of symbols and a plurality of sub-carriers to allocate the UL control signal in a subframe of the UL relay zone; and transmitting the UL control signal by using the resource unit, wherein, if a transition gap required for switching of signal transmission and reception of the relay station is included in the subframe, the UL control signal is transmitted in the remaining symbols excluding the plurality of symbols constituting the resource unit including the transition gap.

Advantageous Effects of Invention

[0011] According to the present invention, orthogonality between an uplink control signal transmitted by a relay station (RS) to a base station (BS) and an uplink control signal transmitted by a mobile station (MS) to the BS can be maintained to the maximum extent possible, and thus interference of the control signals can be reduced. Therefore, the RS can transmit the uplink control signals with high reliability.

Brief Description of Drawings

[0012] FIG. 1 shows a wireless communication system employing a relay station.

[0013] FIG. 2 shows an example of a subframe structure.

[0014] FIG. 3 shows an example of a time division duplexing (TDD) frame structure.

[0015] FIG. 4 shows an example of a frequency division duplexing (FDD) frame structure.

[0016] FIG. 5 to FIG. 8 show examples of a frame structure including a transition gap.

[0017] FIG. 9 shows an example of a TDD frame structure.

[0018] FIG. 10 shows an example in which a transition gap is included in an FDD frame.

[0019] FIG. 11 shows an example of a resource unit used in an uplink control channel.

[0020] FIG. 12 shows an example of resource allocation for a hybrid automatic repeat request (HARQ) feedback control channel (HFBCH).

[0021] FIG. 13 is a flowchart showing a control signal transmission method of a relay station according to an embodiment of the present invention.

[0022] FIG. 14 shows an example of configuring an HFBCH by considering a transition gap.

[0023] FIG. 15 shows another example of configuring an HFBCH by considering a transition gap.

[0024] FIG. 16 shows an example of resource allocation for a bandwidth request channel.

[0025] FIG. 17 is a block diagram showing structures of a relay station and a base station.

Mode for the Invention

[0026] The technology described below can be used in various wireless communication systems such as code division multiple access (CDMA), frequency division multiple access (FDMA), time division multiple access (TDMA), orthogonal frequency division multiple access (OFDMA), single carrier frequency division multiple access (SC-FDMA), etc. The CDMA can be implemented with a radio technology such as universal terrestrial radio access (UTRA) or CDMA-2000. The TDMA can be implemented with a radio technology such as global system for mobile communications (GSM)/general packet ratio service (GPRS)/enhanced data rate for GSM evolution (EDGE). The OFDMA can be implemented with a radio technology such as institute of electrical and electronics engineers (IEEE) 802.11 (Wi-Fi), IEEE 802.16 (WiMAX), IEEE 802-20, evolved UTRA (E-UTRA), etc. IEEE 802.16m is an evolution of IEEE 802.16e, and provides backward compatibility with an IEEE 802.16e-based system. The UTRA is a part of a universal mobile telecommunication system (UMTS). 3rd generation partnership project (3GPP) long term evolution (LTE) is a part of an evolved UMTS (E-UMTS) using the E-UTRA. The 3GPP LTE uses the OFDMA in a downlink and uses the SC-FDMA in an uplink. LTE-advance (LTE-A) is an evolution of the 3GPP LTE.

[0027] For clarity, the following description will focus on the IEEE 802.16m. However, technical features of the present invention are not limited thereto.

[0028] FIG. 1 shows a wireless communication system employing a relay station.

[0029] Referring to FIG. 1, a wireless communication system 10 employing a relay station (RS) 12 includes at least one base station (BS) 11. Each BS 11 provides a communication service to a specific geographical region 15 generally referred to as a cell. The cell can be divided into a plurality of regions, and each region can be referred to as a sector. One or more cells may exist in the coverage of one BS. The BS 11 is generally a fixed station that communicates with a mobile station (MS) 13 and can be referred to as another terminology, such as an evolved node-B (eNB), a base transceiver system (BTS), an access point, an access network (AN), an advanced BS (ABS), etc. The BS 11 can perform functions such as connectivity between the RS 12 and an MS 14, management, control, resource allocation, etc.

[0030] The RS 12 is a device for relaying a signal between the BS 11 and the MS 14, and is also referred to as another terminology such as a relay node (RN), a repeater, an advanced RS (ARS), etc. A relay scheme used in the RS may be either amplify and forward (AF) or decode and forward (DF), and the technical features of the present invention are not limited thereto.

[0031] The MSs 13 and 14 may be fixed or mobile, and can be referred to as another terminology, such as an advanced mobile station (AMS), a user terminal (UT), a subscriber station (SS), a wireless device, a personal digital assistant (PDA), a wireless modem, a handheld device, an access terminal (AT), a user equipment (UE), etc. Hereinafter, a macro MS denotes an MS that directly communicates with the BS 11, and a relay MS denotes an MS that communicates with the RS 12. To improve a data transfer rate depending on a diversity effect, a macro MS 13 located in the cell of the BS 11 can also communicate with the BS 11 via the RS 12.

[0032] Between the BS and the macro MS, a downlink (DL) denotes communication from the BS to the macro MS, and an uplink (UL) denotes communication from the macro MS to the BS. Between the BS and the RS, a DL denotes communication from the BS to the RS, and a UL denotes communication from the RS to the BS. Between the RS and the relay MS, a DL denotes communication from the RS to the relay MS, and a UL denotes communication from the relay MS to the RS.

[0033] FIG. 2 shows an example of a subframe structure.

[0034] A superframe (SF) includes a superframe header (SFH) and four frames F0, F1, F2, and F3. Each frame may have the same length in the SF. Although it is shown that each SF has a size of 20 milliseconds (ms) and each frame has a size of 5 ms, the present invention is not limited thereto. A length of the SF, the number of frames included in the SF, the number of subframes included in the frame, or the like may change variously. The number of subframes included in the frame may change variously according to a channel bandwidth and a cyclic prefix (CP) length.

[0035] The SFH can carry an essential system parameter and system configuration information. The SFH may be located in a first subframe of the SF. The SFH can be classified into a primary-SFH (P-SFH) and a secondary-SFH (S-SFH). The P-SFH and the S-SFH can be transmitted in every superframe.

[0036] One frame includes 8 subframes SF0, SF1, SF2, SF3, SF4, SF5, SF6, and SF7. Each subframe can be used for UL or DL transmission. One subframe includes a plurality of orthogonal frequency division multiplexing (OFDM) symbols in a time domain, and includes a plurality of subcarriers in a frequency domain. An OFDM symbol is for representing one symbol period, and can be referred to as other terminologies such as an OFDMA symbol, an SC-FDMA symbol, etc., according to a multiple access scheme. The subframe can consist of 5, 6, 7, or 9 OFDM symbols. However, this is for

exemplary purposes only, and thus the number of OFDM symbols included in the subframe is not limited thereto. The number of OFDM symbols included in the subframe may change variously according to a channel bandwidth and a CP length.

[0037] A subframe type may be defined according to the number of OFDM symbols included in the subframe. For example, it can be defined such that a type-1 subframe includes 6 OFDM symbols, a type-2 subframe includes 7 OFDM symbols, a type-3 subframe includes 5 OFDM symbols, and a type-4 subframe includes 9 OFDM symbols. One frame may include subframes each having the same type. Alternatively, one frame may include subframes each having a different type. That is, the number of OFDM symbols included in each subframe may be identical or different in one frame. Alternatively, the number of OFDM symbols included in at least one subframe of one frame may be different from the number of OFDM symbols of the remaining subframes of the frame.

[0038] Time division duplexing (TDD) or frequency division duplexing (FDD) can be applied to the frame. In the TDD, each subframe is used in UL or DL transmission at the same frequency and at a different time. That is, subframes included in a TDD frame are divided into a UL subframe and a DL subframe in the time domain. In the FDD, each subframe is used in UL or DL transmission at the same time and at a different frequency. That is, subframes included in an FDD frame are divided into a UL subframe and a DL subframe in the frequency domain. UL transmission and DL transmission occupy different frequency bands and can be simultaneously performed.

[0039] One OFDM symbol includes a plurality of subcarriers, and the number of subcarriers is determined according to a fast Fourier transform (FFT) size. There are several types of subcarriers. A subcarrier type may include a data subcarrier for data transmission, a pilot subcarrier for various estimations, and a null carrier for a guard band and a DC carrier. A parameter for characterizing an OFDM symbol includes BW, N_{used}, n, G, etc. BW denotes a nominal channel bandwidth. N_{used} denotes the number of subcarriers in use (including a DC subcarrier). n denotes a sampling factor. This parameter is used to determine a subcarrier spacing and a useful symbol time together with BW and N_{used}. G denotes a ratio of a CP time and a useful time.

[0040] Table 1 below shows an OFDMA parameter.

[0041]

[Table 1]

Channel bandwidth, BW(MHz)			5	7	8.75	10	20
Sampling factor, n			28/25	8/7	8/7	28/25	28/25
Sampling frequency, F_s(MHz)			5.6	8	10	11.2	22.4
FFT size, N_{FFT}			512	1024	1024	1024	2048
Subcarrier spacing, Δf(kHz)			10.94	7.81	9.77	10.94	10.94
Useful symbol time, T_b(μs)			91.4	128	102.4	91.4	91.4
G=1/8	Symbol time, T_s(μs)		102.857	144	115.2	102.857	102.857
	FDD	Number of OFDMA symbols per 5ms frame	48	34	43	48	48
		Idle time(μs)	62.857	104	46.40	62.857	62.857
	TDD	Number of OFDMA symbols per 5ms frame	47	33	42	47	47
		TTG+RTG(μs)	165.714	248	161.6	165.714	165.714
G=1/16	Symbol time, T_s(μs)		97.143	136	108.8	97.143	97.143
	FDD	Number of OFDMA symbols per 5ms frame	51	36	45	51	51
		Idle time(μs)	45.71	104	104	45.71	45.71
	TDD	Number of OFDMA symbols per 5ms frame	50	35	44	50	50
		TTG+RTG(μs)	142.853	240	212.8	142.853	142.853
G=1/4	Symbol time, T_s(μs)		114.286	160	128	114.286	114.286
	FDD	Number of OFDMA symbols per 5ms frame	43	31	39	43	43
		Idle time(μs)	85.694	40	8	85.694	85.694
	TDD	Number of OFDMA symbols per 5ms frame	42	30	38	42	42
		TTG+RTG(μs)	199.98	200	136	199.98	199.98
Number of Guard subcarriers		Left	40	80	80	80	160
		Right	39	79	79	79	159
Number of used subcarriers			433	865	865	865	1729
Number of PRU in type-1 subframe			24	48	48	48	96

[0042] In Table 1, N_{FFT} is smallest power of two greater than N_{used}. A sampling factor F_s is floor(n·BW/8000)×8000, a subcarrier spacing Δf is F_s/N_{FFT}, a useful symbol time T_b is $1/\Delta f$, a CP time T_g is $G \cdot T_b$, an OFDMA symbol time T_s is T_b+T_g, and a sampling time is T_b/N_{FFT}.

[0043] FIG. 3 shows an example of a TDD frame structure. In this structure, G=1/8. A superframe having a length of 20 ms consists of 4 frames F0, F1, F2, and F3 each having a length of 5 ms. One frame consists of 8 subframes SF0, SF1, SF2, SF3, SF4, SF5, SF6, and SF7, and a ratio of a DL subframe to a UL subframe is 5:3. The TDD frame structure of FIG. 3 can be used when a bandwidth is 5 MHz, 10 MHz, or 20 MHz. The last DL subframe SF4 includes 5 OFDM symbols, and the remaining subframes include 6 OFDM symbols.

[0044] FIG. 4 shows an example of an FDD frame structure. In this structure, G=1/8. A superframe having a length of 20 ms consists of 4 frames F0, F1, F2, and F3 each having

a length of 5 ms. One frame consists of 8 subframes SF0, SF1, SF2, SF3, SF4, SF5, SF6, and SF7, and all subframes include a DL region and a UL region. The FDD frame structure of FIG. 4 can be used when a bandwidth is 5 MHz, 10 MHz, or 20 MHz.

[0045] The aforementioned frame structures can be used between a BS and a macro MS. However, when an RS is included in a wireless communication system, it is difficult for the RS to use the same frame structure used between the BS and the macro MS. Since the RS has to transmit its DL control information (e.g., a preamble or a superframe header (SFH)), the RS requires a radio resource region capable of transmitting a signal to a relay MS in DL transmission. Further, since the RS receives a signal from the relay MS and thereafter retransmits it to the BS by performing decoding, the RS requires a radio resource region capable of transmitting the signal in UL transmission. The BS also requires the radio resource region capable of receiving a signal in UL transmission. In addition, the RS transmits a signal to the relay MS or receives a signal from the BS in the same frequency band. And the RS receives a signal from the relay MS or transmits a signal to the BS in the same frequency band. Therefore, the RS requires a transition gap when switching a signal transmission/reception operation. In general, it is assumed that the RS cannot receive or transmit a signal in the transition gap. By considering such an aspect, a frame structure that can be used in the wireless communication system employing the RS may has the structure of FIG. 5 to FIG. 8 to be described below.

[0046] First, terms will be defined.

[0047] In a BS frame, a DL access zone denotes a radio resource region in which a BS transmits a signal to a macro MS. A DL relay zone denotes a radio resource region in which the BS transmits a signal to an RS and/or a macro MS. A UL access zone denotes a radio resource region in which the BS receives a signal from the macro MS. A UL relay zone denotes a radio resource region in which the BS receives a signal from the RS and/or the macro MS.

[0048] In an RS frame, the DL access zone denotes a radio resource region in which the RS transmits a signal to the relay MS. The DL relay zone denotes a radio resource region in which the RS receives a signal from the BS. The UL access zone denotes a radio resource region in which the RS receives a signal from the relay MS. The UL relay zone denotes a radio resource region in which the RS transmits a signal to the BS.

[0049] In a TDD frame, between a transmission region(e.g DL access zone in a BS frame) and a following reception region(e.g UL access zone in a BS frame), a transmit/receive transition gap (TTG) is located. Between the reception region(e.g UL access zone in a BS frame) and a following transmission region(e.g DL access zone in a following frame), a receive/transmit transition gap (RTG) is located. In the TTG or the RTG, an idle time may be included according to a CP length to avoid inter-symbol interference.

[0050] Examples of the transition gap in a RS frame include a relay transmit to receive transition interval (R-TTI) and a relay receive to transmit transition interval (R-RTI). The R-TTI is a time that can be inserted while switching from an operation of transmitting a signal by the RS to the relay MS to an operation of receiving signal from the BS. The R-TTI may be one symbol. The R-RTI is a time that can be inserted while switching from an operation of receiving a signal by the RS from the relay MS to an operation of transmitting a signal to the BS. The R-RTI may be one symbol. The R-TTI may be determined such that a round trip delay (RTD) and an ARS transmit/ receive transition gap (ARSTTG) between the RS and a super-ordinate station of the RS can be aligned. The R-RTI may be determined such that an RTD and an ARS receive/transmit transition gap (ARSRTG) between the RS and the super-ordinate station of the RS can be aligned.

[0051] FIG. 5 to FIG. 8 show examples of a frame structure including a transition gap.

[0052] FIG. 5 shows a frame structure when a transition gap is included in a DL access zone. Referring to FIG. 5, an R-TTI can be inserted in a last symbol of a DL access zone of an RS frame(ARS frame).

[0053] FIG. 6 shows a frame structure when a transition gap is included in a DL relay zone. Referring to FIG. 6, an R-TTI can be inserted in a first symbol of a DL relay zone of an RS frame.

[0054] FIG. 7 shows a frame structure when a transition gap is included in a UL access zone. Referring to FIG. 7, an R-RTI can be inserted in a last symbol of a UL access zone of an RS frame.

[0055] FIG. 8 shows a frame structure when a transition gap is included in a UL relay zone. Referring to FIG. 8, an R-RTI can be inserted in a first symbol of a UL relay zone.

[0056] In FIG. 8, in a 5-symbol subframe (i.e., UL SF 6) including a transition gap, the RS can transmit a signal to the BS by using 5 symbols excluding a 1st symbol. For example, the RS can transmit the signal after puncturing a symbol including the transition gap in the subframe including the transition gap. On the other hand, the macro MS can transmit a signal to the BS by using a type-1 subframe (i.e., a subframe having 6 symbols). Then, the BS receives the type-1 subframe from the macro MS, and receives only 5 symbols excluding the 1st symbol from the RS.

[0057] FIG. 9 shows an example of a TDD frame structure.

[0058] Referring to FIG. 9, a ratio of a DL subframe and a UL subframe is 5:3. The TDD frame structure can be used, for example, at any one of bandwidths of 5, 10, and 20 MHz when G=1/8. The number of subframes allocated to a DL relay zone is 2. The number of subframes allocated to a UL relay zone is 1. In an RS TDD frame, an R-TTI may be included in a last symbol of the DL access zone in DL transmission, and an R-RTI may be included in a 1st symbol of the UL relay zone in UL transmission.

[0059] FIG. 10 shows an example in which a transition gap is included in an FDD frame.

[0060] Referring to FIG. 10, in case of an FDD DL frame of an RS frame, an R-TTI is included in a last symbol of a DL access zone and an R-RTI is included in a 1st symbol of a UL relay zone for example.

[0061]

[0062] If an RS intends to transmit a UL control signal through a UL control channel to a BS in the UL SF 6 in the frame structure of FIG. 8 above, a 1st symbol cannot be used, which can be problematic. First, a method of transmitting the UL control channel and the UL control signal between the BS and an MS will be described.

[0063] Examples of the UL control channel of the IEEE 802.16m system include a fast feedback channel (FFBCH), a hybrid automatic repeat request (HARQ) feedback control channel (HFBCH), a sounding channel, a ranging channel, a bandwidth request channel (BRCH), etc.

[0064] The fast feedback channel carries feedback of a CQI and/or MIMO information. There are two types of fast feedback channel, i.e., a primary fast feedback channel (PFBCH) and a secondary fast feedback channel (SFBCH). The PFBCH carries 4 to 6-bit information, and provides wideband CQI and/or MIMO feedback. The SFBCH carries 7 to 24-bit information, and provides narrowband CQI and/or MIMO feedback. The fast feedback channel can be allocated to a predetermined position defined in a broadcast message. The fast feedback channel can be periodically allocated to the MS. Through the fast feedback channel, feedback information of a plurality of MSs can be transmitted by being multiplexed using time division multiplexing (TDM), frequency division multiplexing (FDM), and code division multiplexing (CDM). In response to data using HARQ, an HARQ feedback channel through which an ACK/NACK signal is transmitted can start at an offset predetermined from data transmission.

[0065] The BRCH is a channel for requesting a radio resource to transmitting UL data or a control signal intended to be transmitted by the MS.

[0066] The HFBCH is a channel for transmitting an acknowledgement (ACK)/non-acknowledgement (NACK) signal in response to data transmission.

[0067] The FFBCH, the BRCH, the HFBCH, etc., can be located in any position in a UL subframe or frame.

[0068] FIG. 11 shows an example of a resource unit used in a UL control channel.

[0069] A resource unit 300 is a resource allocation unit used in transmission of the UL control channel, and is also referred to as a tile. The tile 300 may be a physical resource allocation unit or may be a logical resource allocation unit. The control channel includes at least one tile 300. The tile 300 consists of at least one subcarrier of a frequency domain over at least one OFDM symbol of a time domain. The tile 300 denotes a group of a plurality of subcarriers consecutive in the time domain and the

frequency domain. The tile 300 includes a plurality of data subcarriers and/or pilot subcarriers. A sequence of a control signal can be mapped to the data subcarrier. A pilot for channel estimation can be mapped to the pilot subcarrier.

[0070] The tile 300 includes three mini units 310, 320, and 330. The mini unit is also referred to as a mini-tile. The tile 300 may consist of a plurality of mini-tiles. The mini-tile may consist of at least one subcarrier of the frequency domain over at least one OFDM symbol of the time domain. For example, each of the mini-tiles 310, 320, and 330 includes two contiguous subcarriers across 6 orthogonal frequency division multiplexing (OFDM) symbols. The mini-tiles 310, 320, and 330 in the tile 300 may not be contiguous with one another in the frequency domain. This implies that at least one mini-tile of another tile can be arranged between the 1st mini-tile 310 and the 2nd mini-tile 320 and/or the 2nd mini-tile 320 and the 3rd mini-tile 330. By deploying the mini-tiles 310, 320, and 330 in the tile 300 in a distribute manner, a frequency diversity can be obtained.

[0071] A resource unit can be used as a unit of resource allocation for a feedback channel. That is, the feedback channel may consist of 3 mini-tiles with a 2(6 size(subcarrier x OFDM symbol). Further, the feedback channel may be configured by allocating a DRU among logical resources. One DRU may consist of 3 distributed tiles with a 6(6 size. The tile may be divided into 3 contiguous mini-tiles with a 2(6 size. Considering that the mini-tile is a resource unit used in the feedback channel, the mini-tile can be referred to as a feedback mini-tile (FMT).

[0072] The number of OFDM symbols in the time domain and/or the number of subcarriers in the frequency domain included in the mini-tile are shown for exemplary purposes only, and thus the present invention is not limited thereto. The number of OFDM symbols included in the mini-tile may vary depending on the number of OFDM symbols included in a subframe. For example, if the number of OFDM symbols included in one subframe is 6, the number of OFDM symbols included in the mini-tile may be 6.

[0073] The OFDM symbol refers to a duration in the time domain, and is not necessarily limited to an OFDM/OFDMA-based system. Thus, the OFDM symbol can be referred to as other terms such as a symbol duration, and technical features of the present invention are not limited to a specific multiple access scheme even if the term 'OFDM symbol' is used herein. Further, the subcarrier refers to an allocation unit in the frequency domain. Although the allocation unit is one subcarrier herein, a subcarrier group can also be used as the allocation unit.

[0074] FIG. 12 shows an example of resource allocation for an HFBCH.

[0075] Resources of the HFBCH exist in three distributed feedback mini-tile (FMT) with a 2(6 size. Each FMT can be divided into an HARQ mini-tile (HMT) with a 2(2 size.

That is, in the HFBCH, an HMT group consisting of three 2(2 HMTs may be a unit of one HFBCH. A pair of HFBCHs is allocated to the HMT group. Orthogonal sequences as shown in the following table are mapped to the respective HMTs.

[0076] [Table 2]

Sequence index	Orthogonal sequence	1-bit Feedabck
0	[+1 +1 +1 +1]	Even numbered channel ACK
1	[+1 -1 +1 -1]	Even numbered channel NACK
2	[+1 +1 -1 -1]	Odd numbered channel ACK
3	[+1 -1 -1 +1]	Odd numbered channel NACK

[0077] In FIG. 12, ($C_{i,0}$, $C_{i,1}$, $C_{i,2}$, $C_{i,3}$, i=0, 1, 2) denotes an orthogonal sequence given by Table 2 above, where i denotes an HMT index. In each HMT group, orthogonal sequences are mapped to respective HMTs, and thus orthogonality is maintained.

[0078] When the aforementioned method is equally applied to an RS, there may be a problem in transmission of a UL control signal. When a 1st symbol in a UL relay zone of an RS frame is used as a transition gap such as an R-RTI, the RS cannot transmit the control signal in the 1st symbol. Then, a problem in which orthogonality is not maintained in HMTs allocated to 1st and 2nd symbols may occur.

[0079] In addition, when HFBCH signals transmitted by a macro MS and the RS are transmitted by being multiplexed, a BS can receive an HMT from the macro MS in two symbols, whereas the BS can receive an HMT from the RS in one symbol.

[0080] FIG. 13 is a flowchart showing a control signal transmission method of an RS according to an embodiment of the present invention.

[0081] The RS receives frame configuration information from a BS (step S100). By using the frame configuration information, the RS configures a DL access zone, a DL relay zone, a UL access zone, and a UL relay zone in a frame (step S110). The RS can configure a resource unit consisting of a plurality of symbols and a plurality of sub-carriers for allocating a UL control signal in a subframe of the UL relay zone. For example, in case of an HFBCH, the resource unit may be an HMT with a 2(2 size in each of 3 distributed FMTs with a 2(6 size. In case of a BRCH, the resource unit may be a 6(6 tile.

[0082] The RS determines whether a symbol used as a transition gap is included in the UL relay zone (step S120). For example, the RS can determine whether a 1st symbol of the UL relay zone is used as the transition gap.

[0083] If the symbol used as the transition gap exists in a type-1 UL subframe, only 5 symbols can be used. In this case, the RS configures a control channel by considering the transition gap (step S130). The control channel configured by considering the

transition gap is used in a method of transmitting a control channel in a subframe in which the number of available symbols is less than the number of originally available symbols due to the transition gap, for example, in a subframe in which only 5 symbols are available. The method of configuring the control channel by considering the transition gap will be described below. The RS transmits a control signal to the BS through the configured control channel (step S150).

[0084] If the UL relay zone does not include the transition gap, the control channel can be configured by using the conventional control channel configuration method (step S140). For example, if the 1st symbol of the UL relay zone is not used as the transition gap, the RS can configure the control channel according to the conventional control channel configuration method. When using the conventional control channel configuration method, for example, in case of the HFBCH, resources for the HFBCH can be allocated according to the method described above with reference to FIG. 10.

[0085] FIG. 14 shows an example of configuring an HFBCH by considering a transition gap.

[0086] If a 1st symbol in a subframe of a UL relay zone is used as a transition gap (e.g., an R-RTI), an RS may not transmit 1st and 2nd symbols in a 1st subframe but transmit only the remaining symbols. That is, the RS may transmit an HARQ ACK/NACK signal in the remaining symbols other than the two symbols constituting a resource unit including a symbol in which the transition gap is located.

[0087] For example, the RS may deploy the HARQ ACK/NACK signal also in the resource unit of the two symbols and thereafter puncture the two symbols and transmit other symbols included in the subframe. Alternatively, the RS may neither deploy the HARQ ACK/NACK signal from the beginning in the resource unit of the two symbols nor transmit the two symbols.

[0088] As such, when the RS transmits only the remaining symbols other than the first two symbols of the UL relay zone, it is possible to prevent orthogonality from being broken in HMTs deployed in the first two symbols.

[0089] If the RS transmits only the remaining symbols other than the first one symbol used as the transition gap in the UL relay zone, orthogonality based on orthogonal sequences is not maintained in an HMT-1 810 received by a BS. For example, if an HFBCH pair of a macro MS and the RS is transmitted in the HMT-1 810, only an HFBCH signal transmitted by the macro MS is received in the 1st symbol, and an HFBCH signal transmitted by the macro MS and the RS is received in the 2nd symbol. Therefore, orthogonality based on the orthogonal sequences is not maintained.

[0090] On the other hand, according to the present invention, orthogonality is maintained in the HMT-1 810 since the BS receives only the HFBCH signal transmitted by the macro MS. Further, in an HMT-2 811 and an HMT-3 812, the HFBCH signal transmitted by

the macro MS and the RS is received while maintaining orthogonality, thereby increasing reliability.

[0091] FIG. 15 shows another example of configuring an HFBCH by considering a transition gap.

[0092] Referring to FIG. 15, a BS can allocate an HMT to which an HFBCH for an MS is allocated and an HMT to which an HFBCH for an RS is allocated by distinguishing the HMTs in a time-frequency domain. That is, the HFBCHs of the MS and the RS can be prevented from being CDM-multiplexed in the same HMT. Then, even if the RS transmits the remaining symbols other than a 1st symbol in an HMT-1 131, only orthogonality on the HMT-1 131 of the RS is broken, and interference on an HARQ ACK/NACK signal transmitted by the MS in an HMT-' 132 does not occur. The RS can allocate a resource for the HFBCH by receiving control channel allocation information from the BS. Although the HFBCH is described above as an example of the control channel, the present invention is not limited thereto.

[0093] In addition, although a case of using the 1st symbol of the UL relay zone is used as the transition gap in the above example described with reference to FIG. 14 and FIG. 15, the present invention is not limited thereto. For example, the present invention can also apply to a case where a last symbol of the UL relay zone is used as the transition gap. In this case, however, the RS may not transmit last two symbols in a UL subframe including the transition gap. Alternatively, by allocating a radio resource of a time-frequency domain different from that of the MS, the RS may transmit the HFBCH to the BS.

[0094] The present invention can also apply to, for example, to a bandwidth request channel.

[0095] FIG. 16 shows an example of resource allocation for a bandwidth request channel.

[0096] The bandwidth request channel may consist of 3 distributed bandwidth request (BR) tiles. The BR tile may be a radio resource region consisting of 6 symbols and 6 subcarriers. The BR tile may include a preamble region in which a preamble is allocated and a data region in which data is allocated. The preamble is transmitted by using the preamble region. The data is transmitted by using the data region. In each BR tile, the preamble region is allocated across 6 symbols in a time domain and 4 subcarriers in a frequency domain. In each BR tile, the data region is allocated across 6 symbols in the time domain and 2 subcarriers in the frequency domain. In FIG. 16, a region marked with Pr may be the preamble region, and a region marked by M may be the data region. The bandwidth request channel may not exist in a subframe or up to two bandwidth request channels can be transmitted.

[0097] Scheduling information on the bandwidth request channel, i.e., information regarding in which subframe a bandwidth request will be performed and which period and radio resource will be used, can be transmitted by the BS to the RS and the MS by using a

superframe header or a broadcast/multicast signal.

[0098] However, when some symbols of the UL relay zone of the RS frame (e.g., a 1st symbol or last symbol of the UL relay zone) is used as an R-RTI or an R-TTI, there is a problem in that orthogonality is broken between a bandwidth request channel transmitted by the MS and a bandwidth request channel transmitted by the RS.

[0099] To solve such a problem, the BS can allocate a bandwidth request channel region to be allocated to the MS and a bandwidth request channel region to be allocated to the RS to a UL subframe including the transition gap by separating the regions.

[0100] In this case, the MS can transmit the bandwidth request channel to the BS according to the conventional method in the same manner as described above with reference to FIG. 16. Further, the RS can transmit the bandwidth request channel by using a new bandwidth request channel region allocated by the BS. For example, if one or more UL subframes exist in the UL relay zone, the bandwidth request channel of the RS can be allocated to a UL subframe not including the transition gap (e.g., R-RTI). In this case, a resource region to which the bandwidth request channel of the RS is allocated may be identical to a resource region in which the bandwidth request channel of the MS is allocated. In the remaining UL subframes other than the UL subframe including the transition gap in the UL relay zone, the RS and the MS can maintain orthogonality with each other and thus can use the same time-frequency resource region.

[0101] Alternatively, in the UL subframe including the transition gap in the UL relay zone, the BS may not allocate the bandwidth request channel for the RS.

[0102] Alternatively, the BS can allocate a bandwidth request header dedicated for the RS in the UL subframe including the transition gap in the UL relay zone. Alternatively, the BS may allocate the bandwidth request header so that a bandwidth request is performed irrespective of the transition gap. Information on a period of the bandwidth request header and a repetition duration can be received by the RS by performing polling on an information element (IE) message. In general, the RS transmits a bandwidth request signal more frequently and has a more amount of resources required for the bandwidth request channel in comparison with the MS, and thus the BS can allocate the bandwidth request header periodically for the RS. Such a method may be effective when only one UL subframe exists in the UL relay zone.

[0103] FIG. 17 is a block diagram showing structures of an RS and a BS.

[0104] A BS 500 includes a processor 510, a memory 530, and a radio frequency (RF) unit 520. The processor 510 performs scheduling to allocate a radio resource to an RS 600 and to receive a signal from the RS 600. The processor 510 can implement procedures, methods, and functions performed by the BS in the aforementioned embodiments. The memory 530 is coupled to the processor 510, and stores a variety of information for driving the processor 510. The RF unit 520 is coupled to the processor 510 and

transmits and/or receives a radio signal.

[0105] The RS 600 includes a processor 610, a memory 620, and an RF unit 630. The processor 610 can implement procedures, methods, and functions performed by the RS in the aforementioned embodiments. For example, the processor 610 configures a UL relay zone for transmitting a signal by the RS to the BS in a frame and configures a resource unit including a plurality of symbols and a plurality of subcarriers to allocate the UL control signal in a subframe of the UL relay zone. The processor 610 generates and allocates the UL control signal transmitted by using the resource unit. If a transition gap required for switching of signal transmission and reception of the RS is included in the UL subframe of the UL relay zone, the UL control signal can be transmitted in the remaining symbols other than the plurality of symbols constituting the resource unit including the transition gap by the processor 610. The memory 620 is coupled to the processor 610, and stores a variety of information for driving the processor 610. The RF unit 630 is coupled to the processor 610 and transmits and/or receives a radio signal.

[0106] The processors 510 and 610 may include an application-specific integrated circuit (ASIC), a separate chipset, a logic circuit, and/or a data processing unit. The memories 530 and 620 may include a read-only memory (ROM), a random access memory (RAM), a flash memory, a memory card, a storage medium, and/or other equivalent storage devices. The RF units 520 and 630 may include a base-band circuit for processing a radio signal. When the embodiment of the present invention is implemented in software, the aforementioned methods can be implemented with a module (i.e., process, function, etc.) for performing the aforementioned functions. The module may be stored in the memories 530 and 620 and may be performed by the processors 510 and 610. The memories 530 and 620 may be located inside or outside the processors 510 and 610, and may be coupled to the processors 510 and 610 by using various well-known means.

[0107] The present invention can be implemented with hardware, software, or combination thereof. In hardware implementation, the present invention can be implemented with one of an application specific integrated circuit (ASIC), a digital signal processor (DSP), a programmable logic device (PLD), a field programmable gate array (FPGA), a processor, a controller, a microprocessor, other electronic units, and combination thereof, which are designed to perform the aforementioned functions. In software implementation, the present invention can be implemented with a module for performing the aforementioned functions. Software is storable in a memory unit and executed by the processor. Various means widely known to those skilled in the art can be used as the memory unit or the processor.

[0108] While the present invention has been particularly shown and described with reference

to exemplary embodiments thereof, it will be understood by those skilled in the art that various changes in form and details may be made therein without departing from the spirit and scope of the invention as defined by the appended claims. The exemplary embodiments should be considered in descriptive sense only and not for purposes of limitation. Therefore, the scope of the invention is defined not by the detailed description of the invention but by the appended claims, and all differences within the scope will be construed as being included in the present invention.

Claims

[Claim 1] A method of transmitting an uplink (UL) control signal of a relay station, the method comprising:configuring a UL relay zone for transmitting a signal by the relay station to a base station in a frame;configuring a resource unit comprising a plurality of symbols and a plurality of subcarriers to allocate the UL control signal in a subframe of the UL relay zone; andtransmitting the UL control signal by using the resource unit,wherein, if a transition gap required for switching of signal transmission and reception of the relay station is included in the subframe, the UL control signal is transmitted in the remaining symbols other than the plurality of symbols constituting the resource unit including the transition gap.

[Claim 2] The method of claim 1, wherein the transition gap is included in a first symbol or a last symbol of the subframe.

[Claim 3] The method of claim 1, wherein the resource unit comprises two symbols in a time domain and two subcarriers in a frequency domain.

[Claim 4] The method of claim 3, wherein the UL control signal is hybrid automatic repeat request (HARQ) acknowledgement/negative acknowledgement (ACK/NACK) for data transmitted by the base station to the relay station.

[Claim 5] The method of claim 4, wherein the UL control signal is transmitted in the remaining symbols other than first two symbols in the subframe.

[Claim 6] The method of claim 1, wherein the UL control signal is a bandwidth request signal.

[Claim 7] A method of transmitting an uplink (UL) control signal of a relay station, the method comprising:configuring a UL relay zone for transmitting a signal by the relay station to a base station in a frame;configuring a resource unit comprising a plurality of symbols and a plurality of subcarriers to allocate the UL control signal in a subframe of the UL relay zone; andtransmitting the UL control signal by using the resource unit,wherein, if a transition gap required for switching of signal transmission and reception of the relay station is included in the subframe, the resource unit has a frequency or time different from that of a resource unit by which a mobile station transmits the UL control signal to the base station.

[Claim 8] A relay station comprising:a radio frequency (RF) unit for transmitting and receiving a radio signal; anda processor coupled to the RF

unit,wherein the processor configures an uplink (UL) relay zone for transmitting a signal by the relay station to a base station in a frame, configures a resource unit comprising a plurality of symbols and a plurality of subcarriers to allocate the UL control signal in a subframe of the UL relay zone, and transmits the UL control signal by using the resource unit, and if a transition gap required for switching of signal transmission and reception of the relay station is included in the subframe, the UL control signal is transmitted in the remaining symbols other than the plurality of symbols constituting the resource unit comprising the transition gap.

[Claim 9] A relay station comprising:a radio frequency (RF) unit for transmitting and receiving a radio signal; anda processor coupled to the RF unit,wherein the processor configures an uplink (UL) relay zone for transmitting a signal by the relay station to a base station in a frame, configures a resource unit comprising a plurality of symbols and a plurality of subcarriers to allocate the UL control signal in a subframe of the UL relay zone, and transmits the UL control signal by using the resource unit, and if a transition gap required for switching of signal transmission and reception of the relay station is included in the subframe, the resource unit has a frequency or time different from that of a resource unit by which a mobile station transmits the UL control signal to the base station.

[Fig. 1]

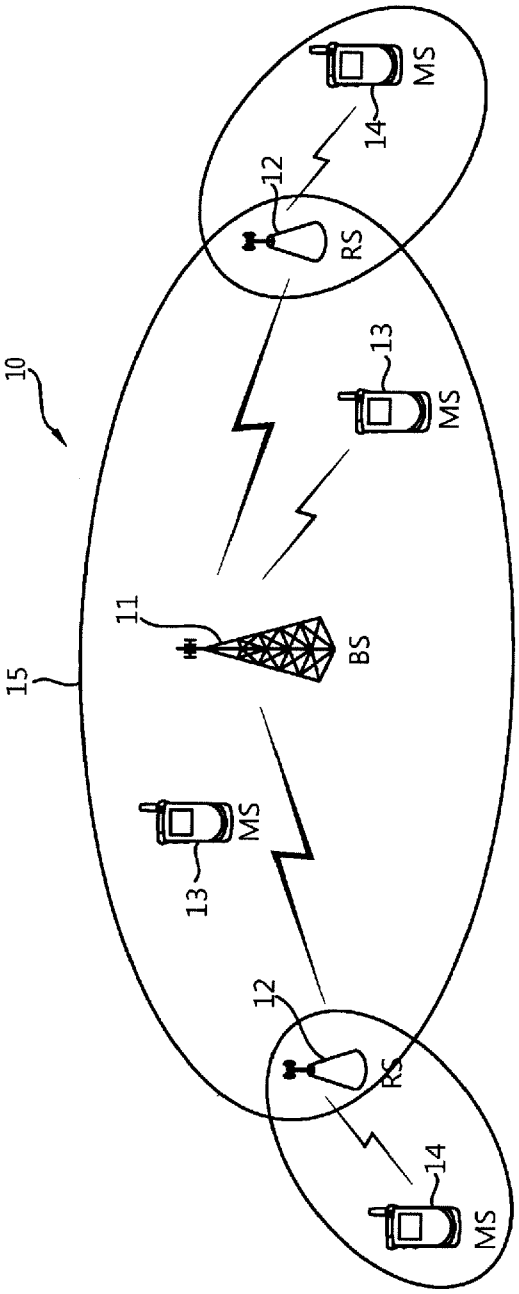

[Fig. 2]

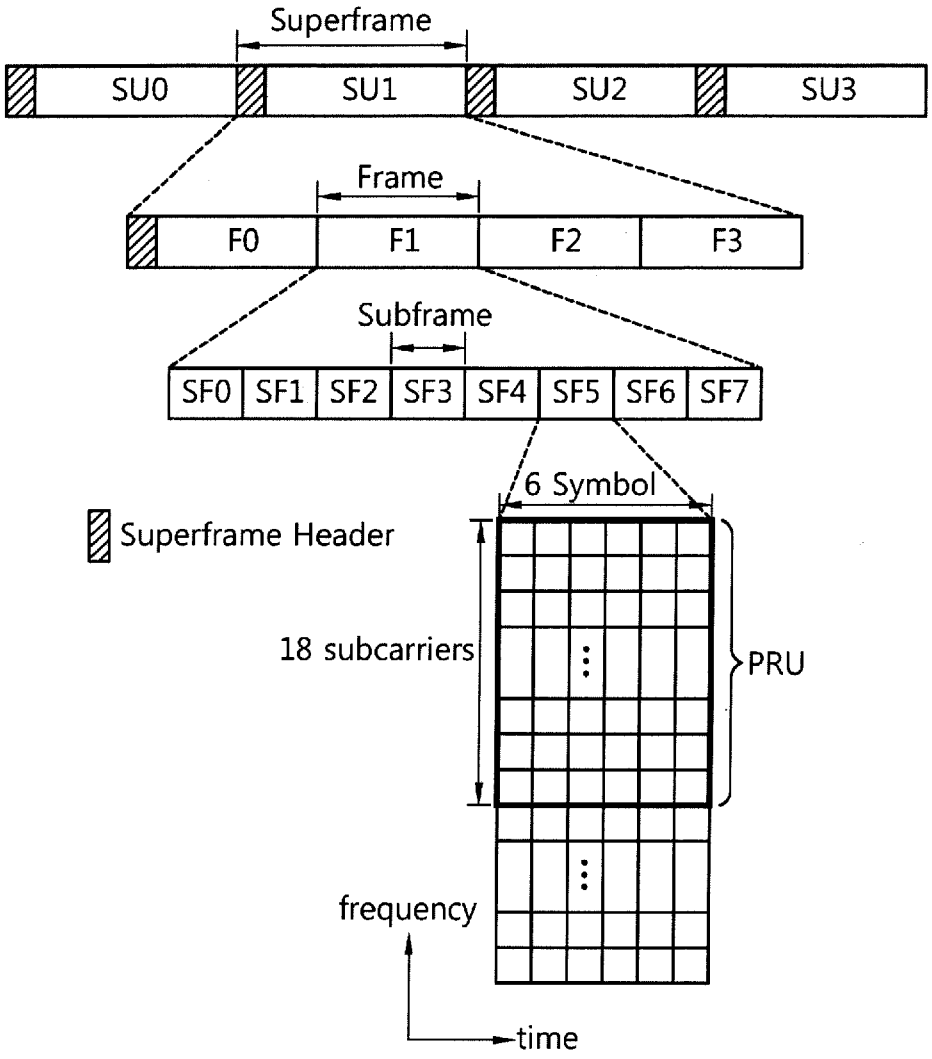
Superframe
SU0
SU1
SU2
SU3
Frame
F0
F1
F2
F3
Subframe
SF0
SF1
SF2
SF3
SF4
SF5
SF6
SF7
6 Symbol
Superframe Header
18 subcarriers
PRU
frequency
time

[Fig. 3]

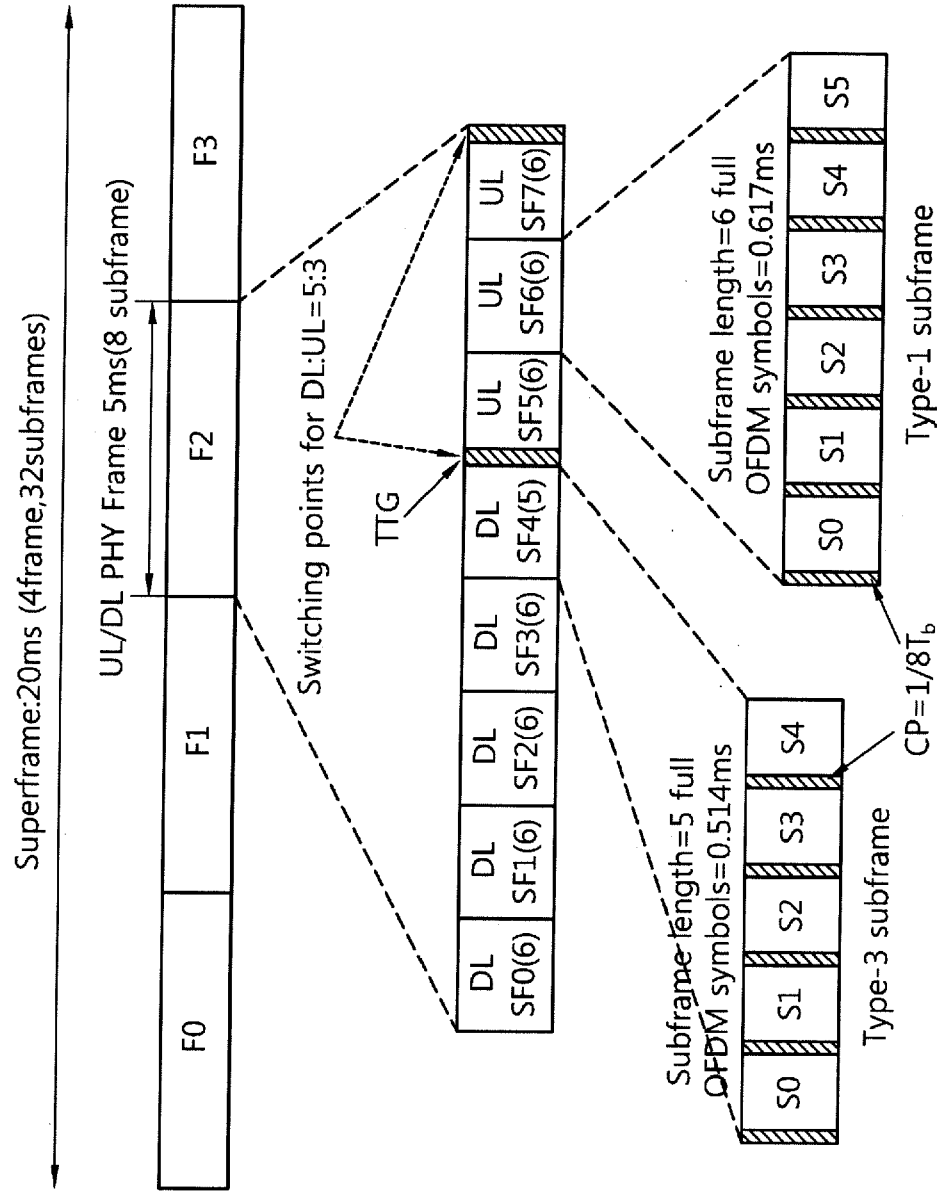
Superframe:20ms (4frame,32subframes)
UL/DL PHY Frame 5ms(8 subframe)
F0
F1
F2
F3
Switching points for DL:UL=5:3
TTG
DL SF0(6)
DL SF1(6)
DL SF2(6)
DL SF3(6)
DL SF4(5)
UL SF5(6)
UL SF6(6)
UL SF7(6)
Subframe length=5 full OFDM symbols=0.514ms
S0
S1
S2
S3
S4
Type-3 subframe
Subframe length=6 full OFDM symbols=0.617ms
S0
S1
S2
S3
S4
S5
Type-1 subframe
CP=1/8Tb

[Fig. 4]

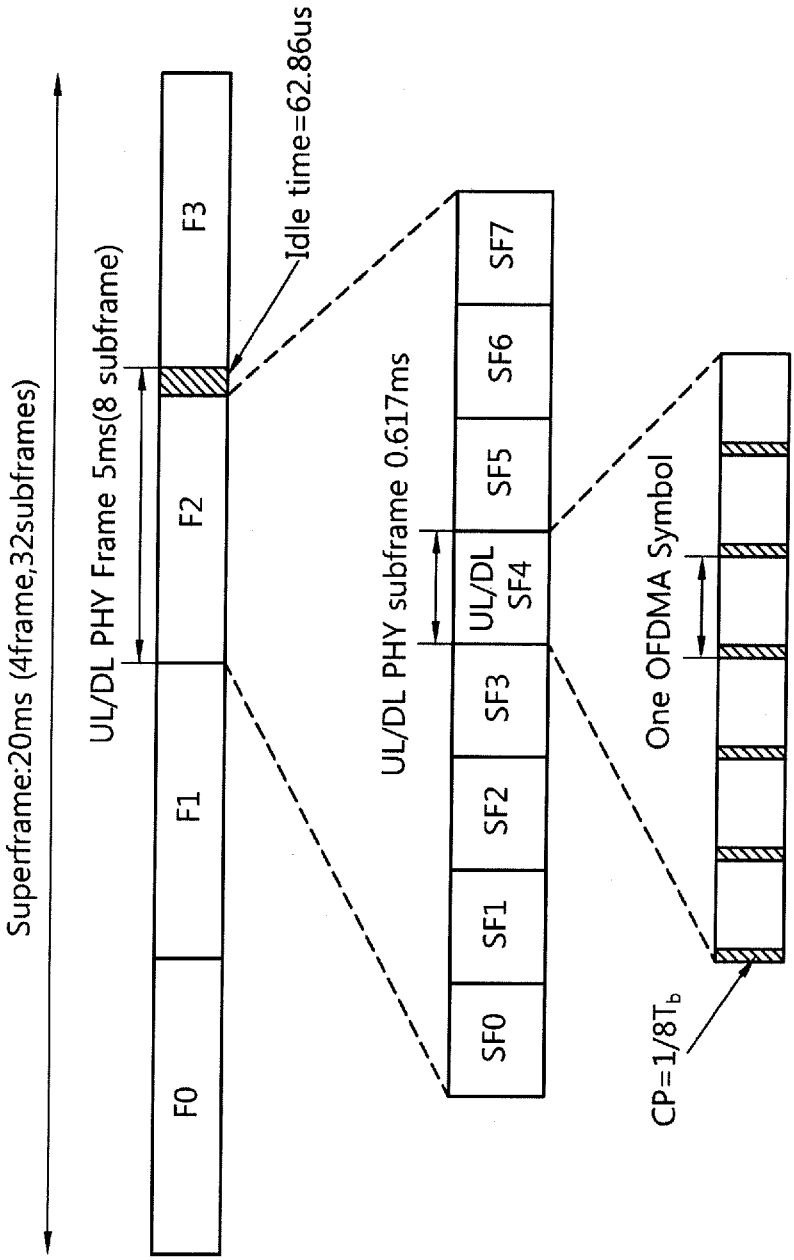
Superframe:20ms (4frame,32subframes)
UL/DL PHY Frame 5ms(8 subframe)
F0
F1
F2
F3
Idle time=62.86us
UL/DL PHY subframe 0.617ms
SF0
SF1
SF2
SF3
UL/DL SF4
SF5
SF6
SF7
One OFDMA Symbol
CP=1/8Tb

[Fig. 5]

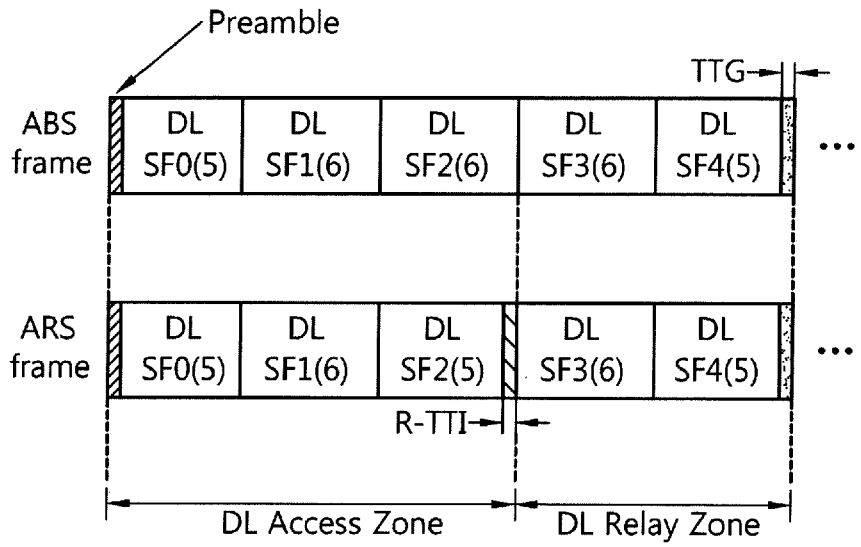
Preamble
TTG
ABS frame
DL SF0(5)
DL SF1(6)
DL SF2(6)
DL SF3(6)
DL SF4(5)
ARS frame
DL SF0(5)
DL SF1(6)
DL SF2(5)
DL SF3(6)
DL SF4(5)
R-TTI
DL Access Zone
DL Relay Zone

[Fig. 6]

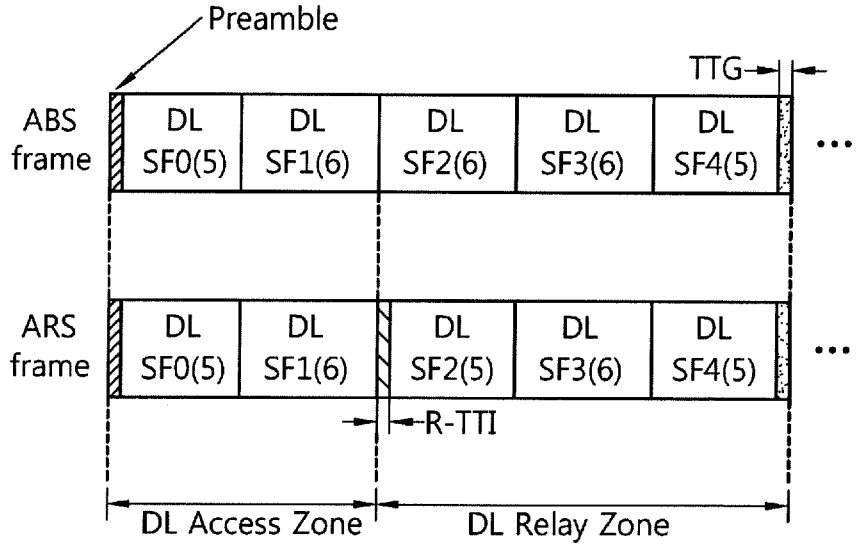
Preamble
TTG
ABS frame
DL SF0(5)
DL SF1(6)
DL SF2(6)
DL SF3(6)
DL SF4(5)
ARS frame
DL SF0(5)
DL SF1(6)
DL SF2(5)
DL SF3(6)
DL SF4(5)
R-TTI
DL Access Zone
DL Relay Zone

[Fig. 7]

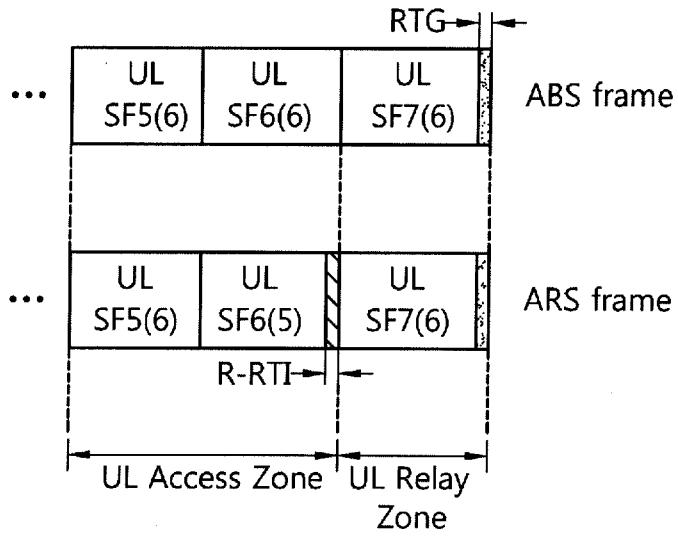
RTG
UL SF5(6)
UL SF6(6)
UL SF7(6)
ABS frame
UL SF5(6)
UL SF6(5)
UL SF7(6)
ARS frame
R-RTI
UL Access Zone
UL Relay Zone

[Fig. 8]

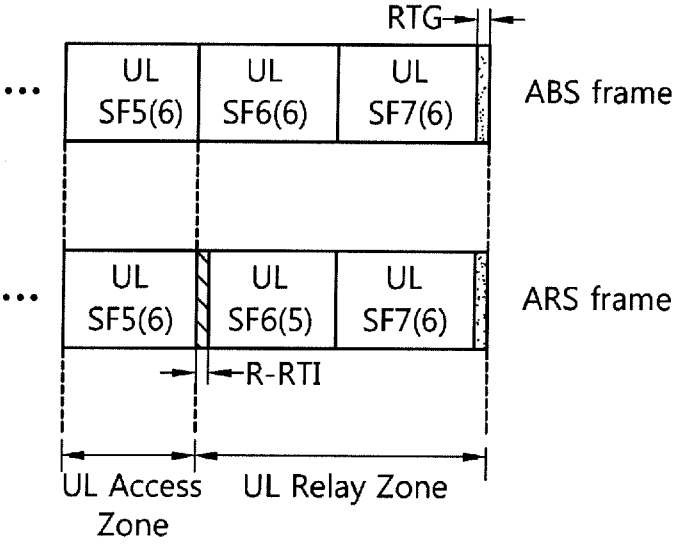
RTG
UL SF5(6)
UL SF6(6)
UL SF7(6)
ABS frame
UL SF5(6)
UL SF6(5)
UL SF7(6)
ARS frame
R-RTI
UL Access Zone
UL Relay Zone

[Fig. 9]

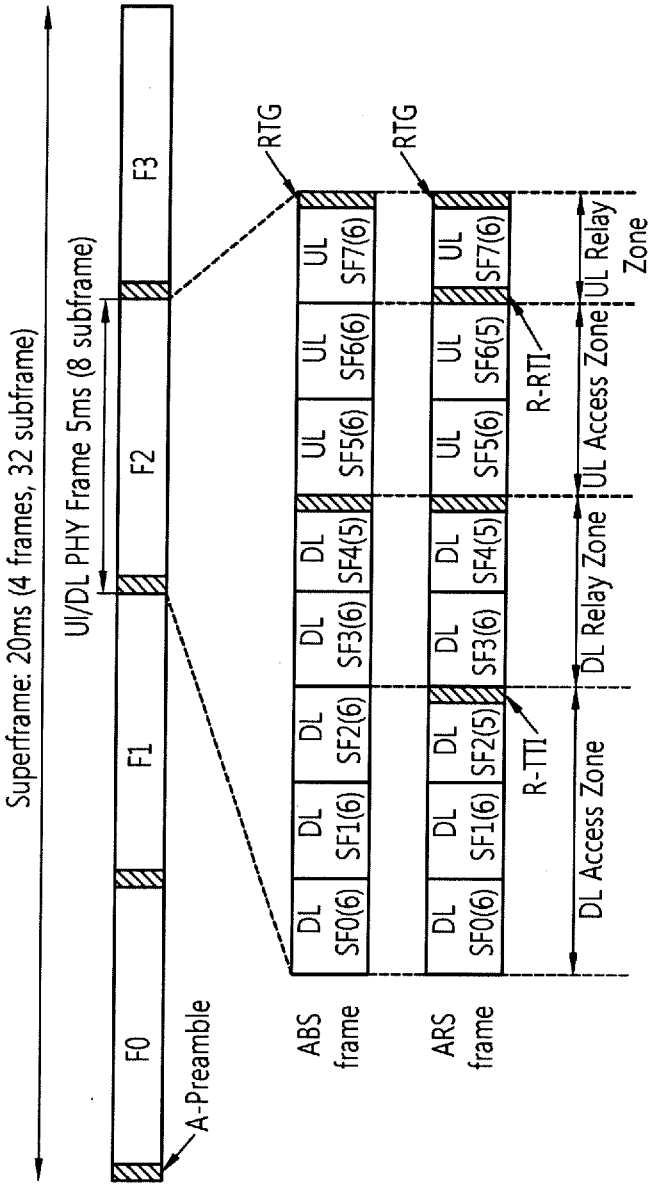
Superframe: 20ms (4 frames, 32 subframe)
UI/DL PHY Frame 5ms (8 subframe)
F0
F1
F2
F3
A-Preamble
RTG
RTG
ABS frame
ARS frame
DL SF0(6)
DL SF1(6)
DL SF2(6)
DL SF3(6)
DL SF4(5)
UL SF5(6)
UL SF6(6)
UL SF7(6)
R-TTI
R-RTI
DL Access Zone
DL Relay Zone
UL Access Zone
UL Relay Zone

[Fig. 10]

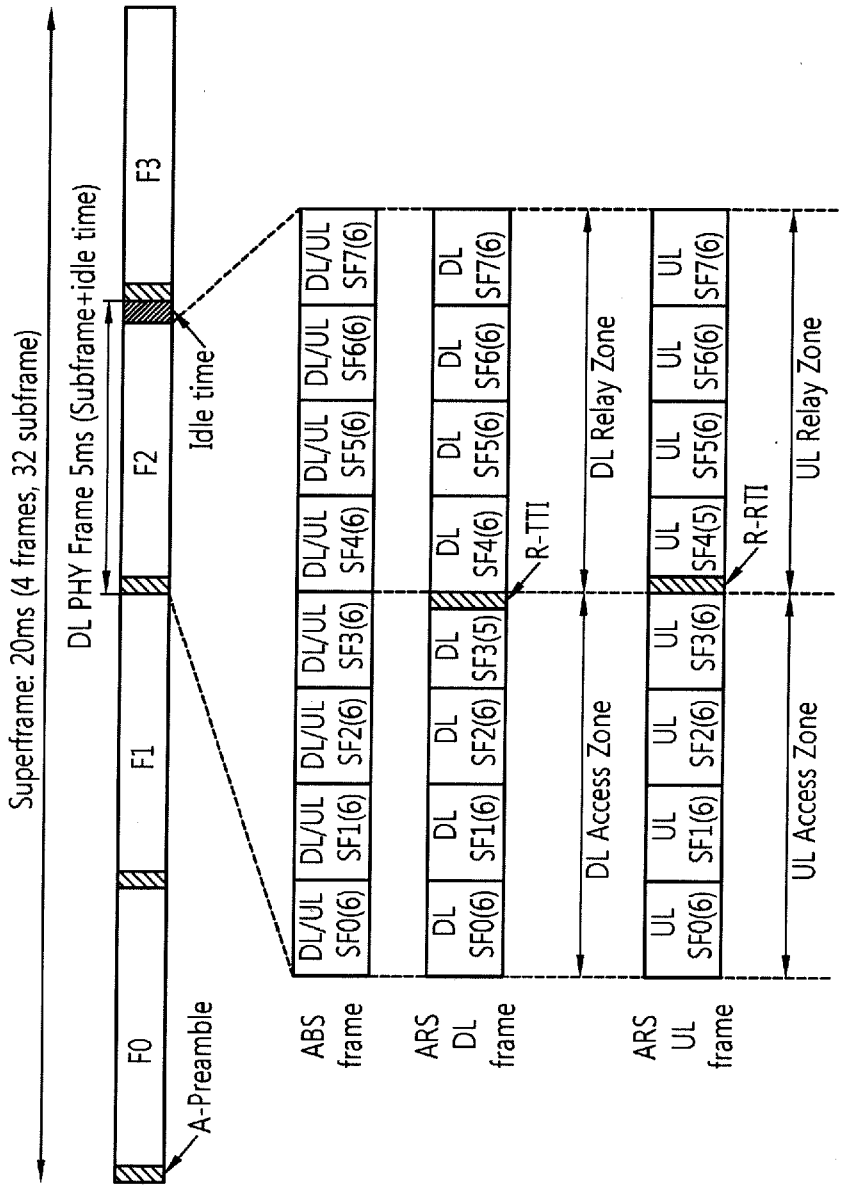
Superframe: 20ms (4 frames, 32 subframe)
DL PHY Frame 5ms (Subframe+idle time)
F0
F1
F2
F3
A-Preamble
Idle time
ABS frame
ARS DL frame
ARS UL frame
DL/UL SF0(6)
DL/UL SF1(6)
DL/UL SF2(6)
DL/UL SF3(6)
DL/UL SF4(6)
DL/UL SF5(6)
DL/UL SF6(6)
DL/UL SF7(6)
DL SF0(6)
DL SF1(6)
DL SF2(6)
DL SF3(5)
DL SF4(6)
DL SF5(6)
DL SF6(6)
DL SF7(6)
UL SF0(6)
UL SF1(6)
UL SF2(6)
UL SF3(6)
UL SF4(5)
UL SF5(6)
UL SF6(6)
UL SF7(6)
R-TTI
R-RTI
DL Access Zone
DL Relay Zone
UL Access Zone
UL Relay Zone

[Fig. 11]

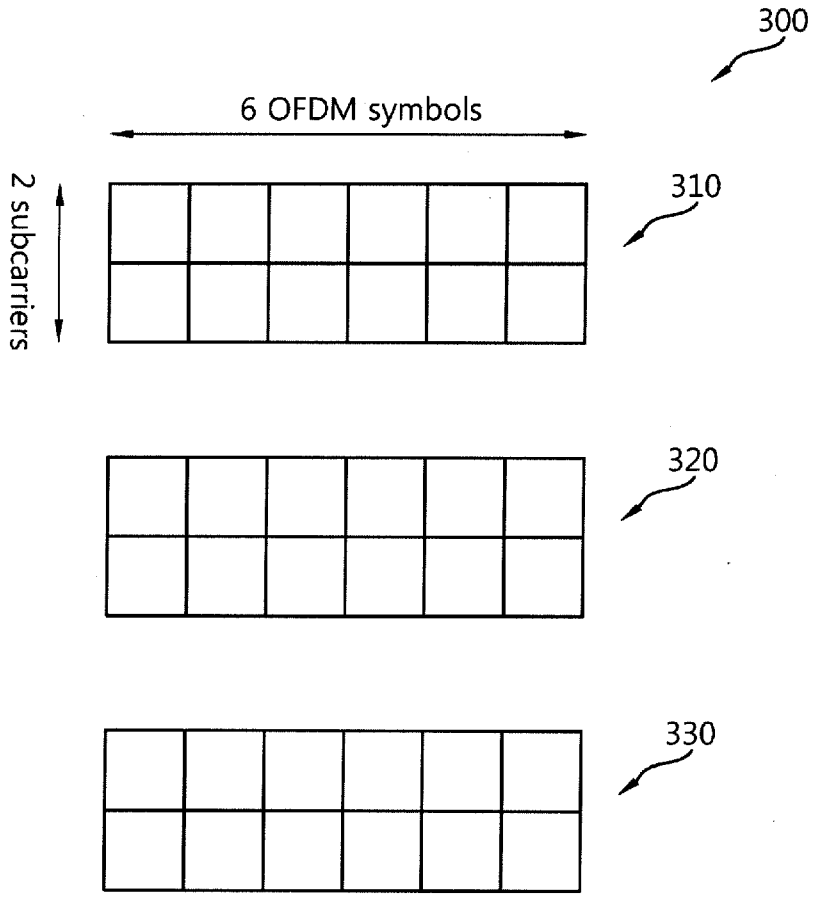

[Fig. 12]

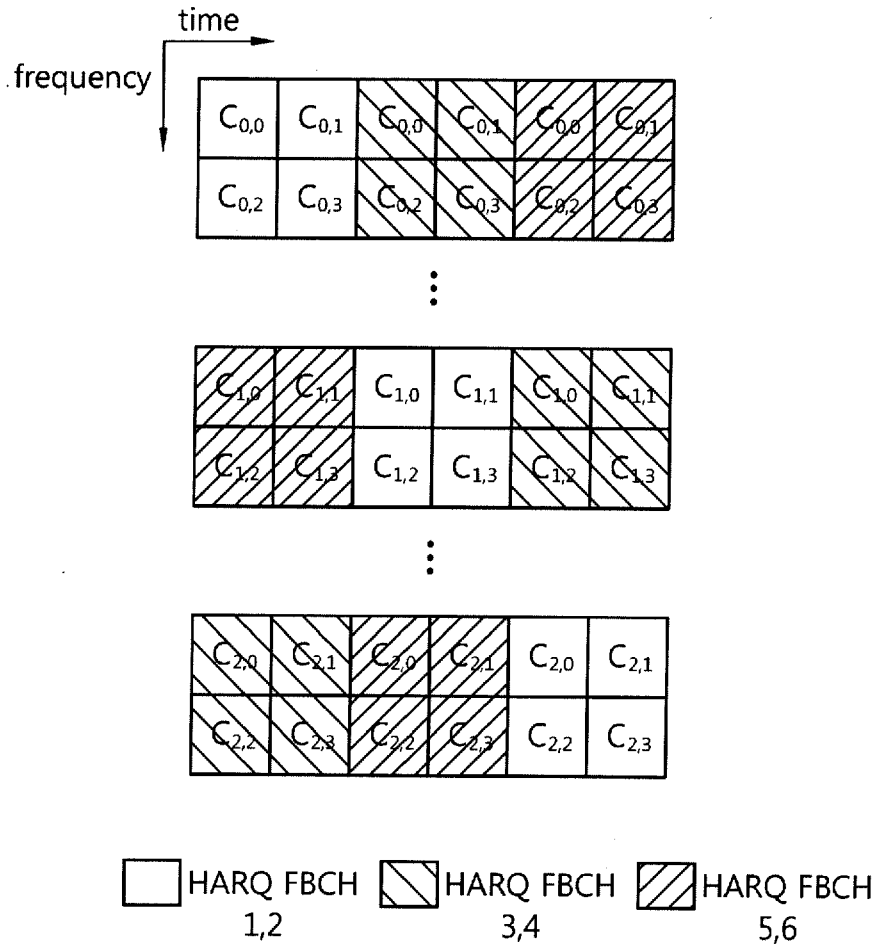
time
frequency
C0,0 C0,1 C0,0 C0,1 C0,0 C0,1
C0,2 C0,3 C0,2 C0,3 C0,2 C0,3
C1,0 C1,1 C1,0 C1,1 C1,0 C1,1
C1,2 C1,3 C1,2 C1,3 C1,2 C1,3
C2,0 C2,1 C2,0 C2,1 C2,0 C2,1
C2,2 C2,3 C2,2 C2,3 C2,2 C2,3
HARQ FBCH 1,2
HARQ FBCH 3,4
HARQ FBCH 5,6

[Fig. 13]

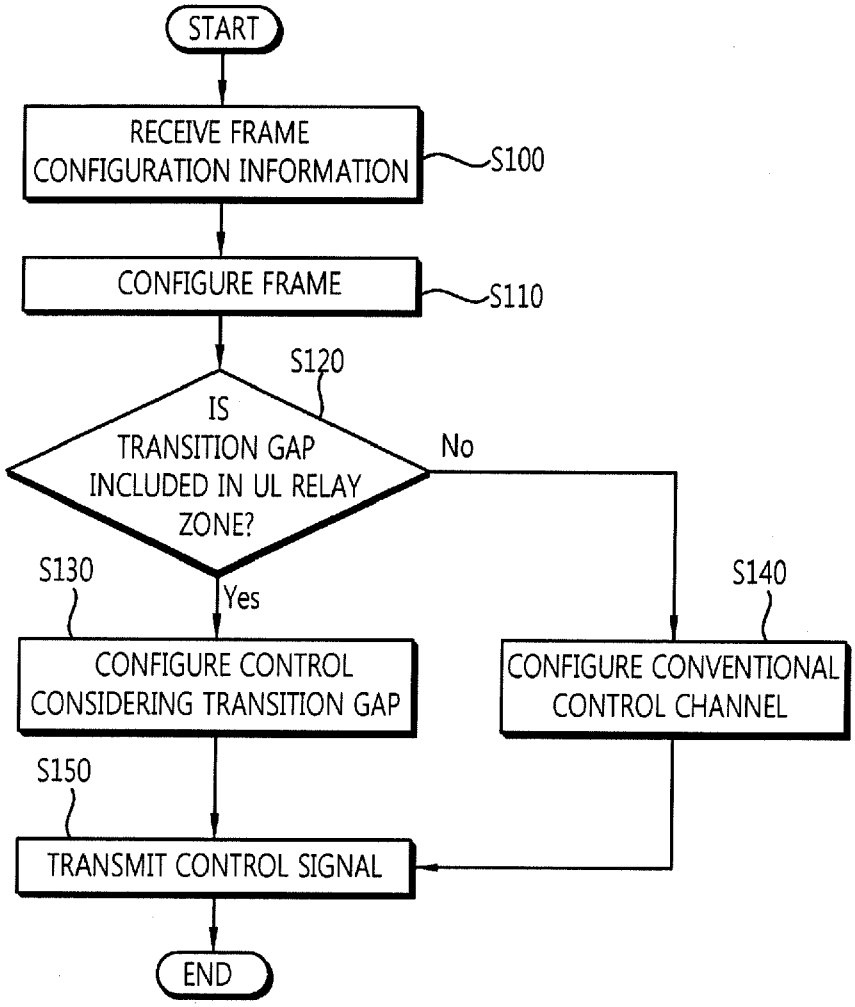
START
RECEIVE FRAME CONFIGURATION INFORMATION
S100
CONFIGURE FRAME
S110
S120
IS TRANSITION GAP INCLUDED IN UL RELAY ZONE?
No
Yes
S130
CONFIGURE CONTROL CONSIDERING TRANSITION GAP
S140
CONFIGURE CONVENTIONAL CONTROL CHANNEL
S150
TRANSMIT CONTROL SIGNAL
END

[Fig. 14]

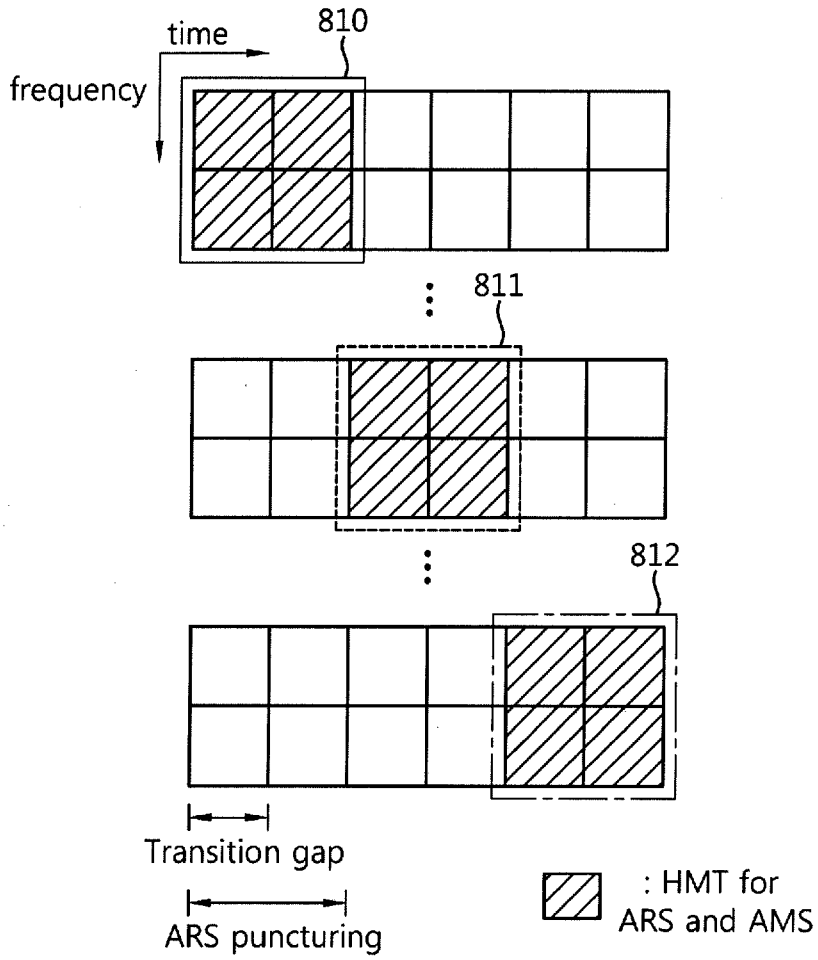
time
frequency
810
811
812
Transition gap
ARS puncturing
: HMT for ARS and AMS

[Fig. 15]

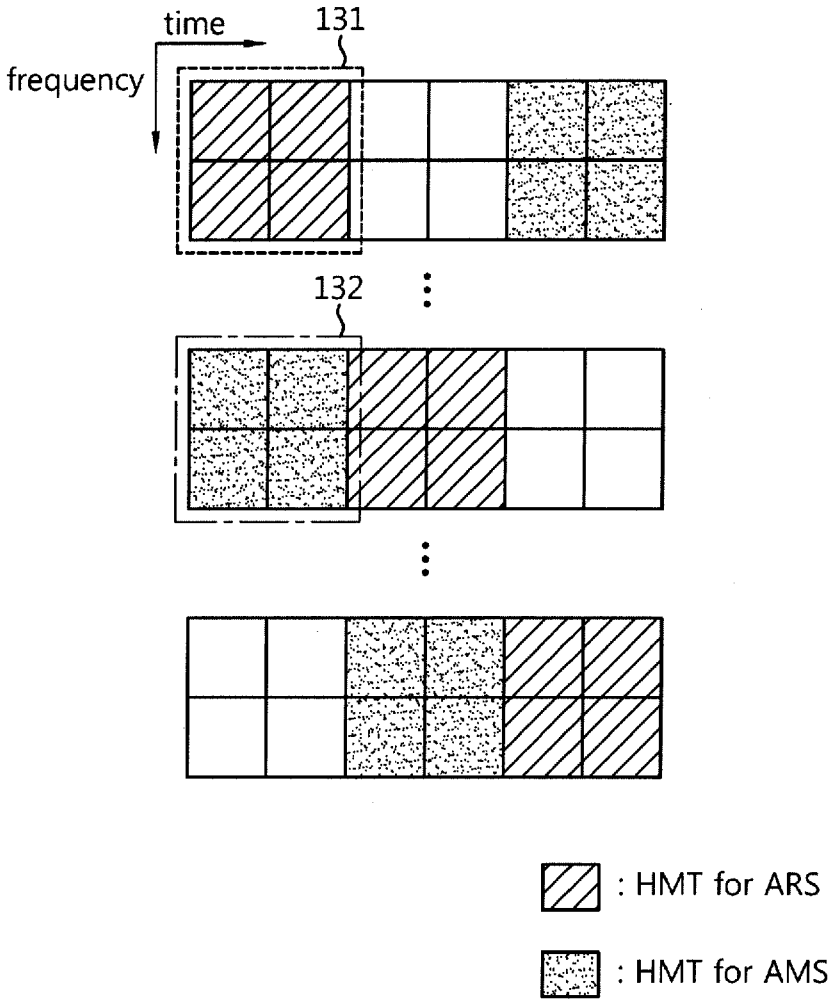

[Fig. 16]

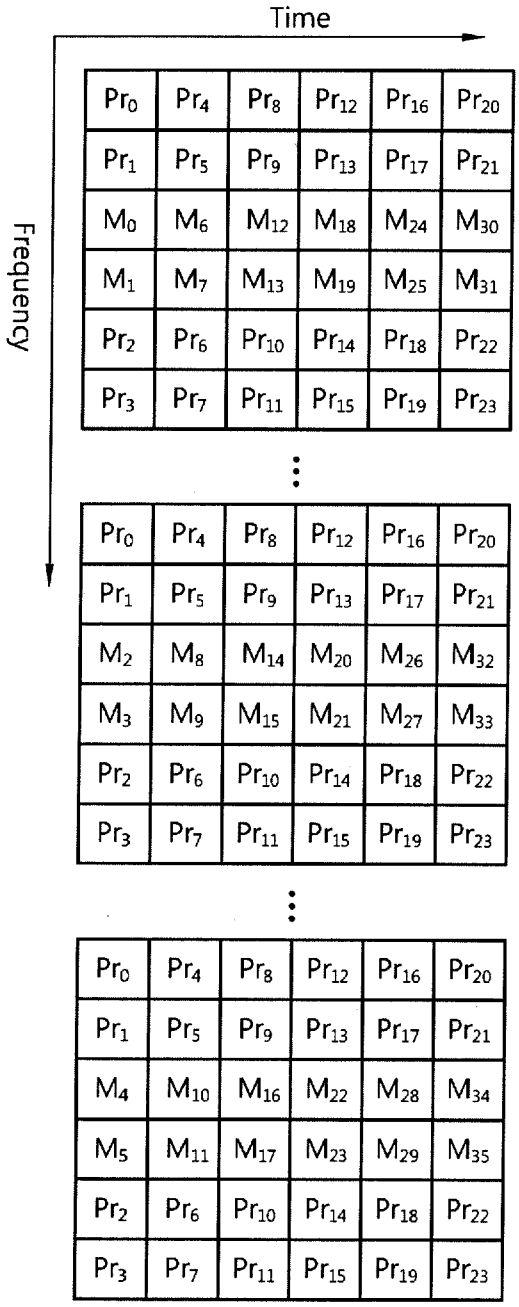
Time
Frequency
Pr0 Pr4 Pr8 Pr12 Pr16 Pr20
Pr1 Pr5 Pr9 Pr13 Pr17 Pr21
M0 M6 M12 M18 M24 M30
M1 M7 M13 M19 M25 M31
Pr2 Pr6 Pr10 Pr14 Pr18 Pr22
Pr3 Pr7 Pr11 Pr15 Pr19 Pr23
Pr0 Pr4 Pr8 Pr12 Pr16 Pr20
Pr1 Pr5 Pr9 Pr13 Pr17 Pr21
M2 M8 M14 M20 M26 M32
M3 M9 M15 M21 M27 M33
Pr2 Pr6 Pr10 Pr14 Pr18 Pr22
Pr3 Pr7 Pr11 Pr15 Pr19 Pr23
Pr0 Pr4 Pr8 Pr12 Pr16 Pr20
Pr1 Pr5 Pr9 Pr13 Pr17 Pr21
M4 M10 M16 M22 M28 M34
M5 M11 M17 M23 M29 M35
Pr2 Pr6 Pr10 Pr14 Pr18 Pr22
Pr3 Pr7 Pr11 Pr15 Pr19 Pr23

[Fig. 17]

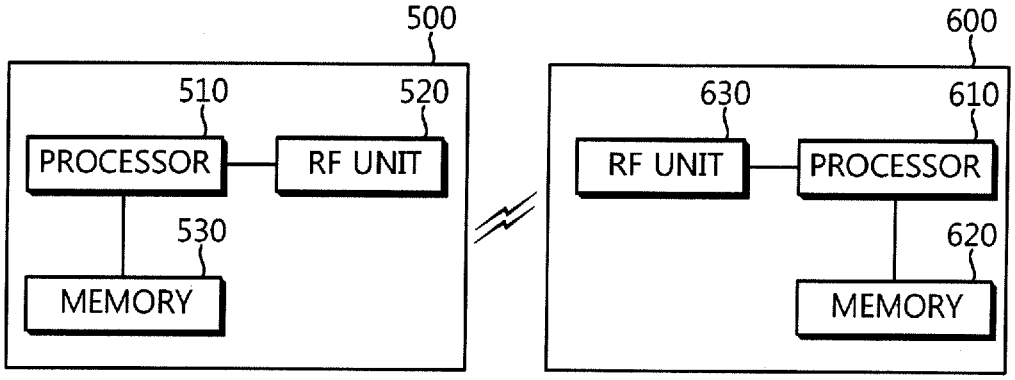
500
510
520
PROCESSOR
RF UNIT
530
MEMORY
600
630
610
RF UNIT
PROCESSOR
620
MEMORY

UNITED STATES PATENT AND TRADEMARK OFFICE

UNITED STATES DEPARTMENT OF COMMERCE
United States Patent and Trademark Office
Address: COMMISSIONER FOR PATENTS
P.O. Box 1450
Alexandria, Virginia 22313-1450
www.uspto.gov

APPLICATION NO.	FILING DATE	FIRST NAMED INVENTOR	ATTORNEY DOCKET NO.	CONFIRMATION NO.
12/882,556	09/15/2010	Jin Young Chun	002027-5005	3155

9629 7590 08/30/2011

MORGAN LEWIS & BOCKIUS LLP (WA)
KAREN CATALANO
1111 PENNSYLVANIA AVENUE NW
WASHINGTON, DC 20004

EXAMINER	
ART UNIT	PAPER NUMBER
2469	

MAIL DATE	DELIVERY MODE
08/30/2011	PAPER

Please find below and/or attached an Office communication concerning this application or proceeding.

The time period for reply, if any, is set in the attached communication.

UNITED STATES PATENT AND TRADEMARK OFFICE

Commissioner for Patents
United States Patent and Trademark Office
P.O. Box 1450
Alexandria, VA 22313-1450
www.uspto.gov

MORGAN LEWIS & BOCKIUS LLP (WA)
Karen Catalano
1111 PENNSYLVANIA AVENUE NW
WASHINGTON DC 20004

In re Application of: Chun et al.
Application No. 12/882556
Filed: 09/15/10
For: METHOD AND APPARATUS FOR TRANSMITTING UPLINK CONTROL SIGNAL IN RELAY STATION

DECISION ON REQUEST TO PARTICIPATE IN PATENT PROSECUTION HIGHWAY PROGRAM AND PETITION TO MAKE SPECIAL UNDER 37 CFR 1.102(a)

This is a decision on a rewed request to participate in the Patent Prosecution Highway (PPH) program and the petition under 37 CFR 1.102(a), filed August 24, 2011. The first petition was filed June 24, 2011 to make the above-identified application special and was dismissed July 25, 2011. .

The petition is **Granted.**

A grantable request to participate in the PPH program and petition to make special require:

(1) The U.S. application is
(a) a Paris Convention application which either
(i) validly claims priority under 35 U.S.C. 119(a) and 37 CFR 1.55 to one or more applications filed in the KIPO, or
(ii) validly claims priority to a PCT application that contains no priority claims,

Or

(b) a national stage application under the PCT (an application which entered the national stage in the U.S. from a PCT international application after compliance with 35 U.S.C. 371), which PCT application
(i) validly claims priority to an application filed in the KIPO, or
(ii) validly claims priority to a PCT application that contains no priority claims, or
(iii) contains no priority claim,

Or

(c) a so-called bypass application filed under 35 U.S.C. 111 (a) which validly claims benefit under 35 U.S.C. 120 to a PCT application, which PCT application

(i) validly claims priority to an application filed in the KIPO, or

(ii) validly claims priority to a PCT application that contains no priority claims, or

(iii) contains no priority claim.

Where the KIPO application that contains the allowable/patentable claims is not the same application for which priority is claimed in the U.S. application, applicant must identify the relationship between the KIPO application that contains the allowable/patentable claims and the KIPO priority application claimed in the U.S. application;

(2) Applicant must submit a copy of:

a. The allowable/patentable claim(s) from the KR application(s);

b. An English translation of the allowable/patentable claim(s), if the claims were published in a language other than English); and

c. A statement that the English translation is accurate;

(3) Applicant must:

a. Ensure all the claims in the U.S. application must sufficiently correspond or be amended to sufficiently correspond to the allowable/patentable claim(s) in the KIPO application(s) and

b. Submit a claim correspondence table in English;

(4) Examination of the U.S. application has not begun

(5) Applicant must submit:

a. A copy of all the office action(s) (which are relevant to patentability), excluding "Decision to Grant a Patent" from each of the KR application(s) containing the allowable/patentable claim(s);

b. An English language translation of the KIPO office action(s) (if the office action(s) are not in the English language); and

c. A statement that the English translation is accurate;

(6) Applicant must submit:

a. An IDS listing the documents cited by the KIPO examiner in the KIPO office
action (unless already filed in this application); and

b. Copies of all the documents cited in the KIPO office action, except U.S. patents
or U.S. patent application publications (unless already filed in this application); and

(7) The required petition fee under 37 CFR 1.17(h) if submitted before May of 2010.

The first request to participate in the PPH pilot program and petition fails to meet item 2 of the requirements above. While a copy of the KIPO office action is found, a review of the file has failed to find the KIPO claims, and if not in English, a translation and a statement that the translation is accurate. The second request included a copy of the claims and therefore all of the required items above have been provided.

The Petition is **Granted.**

Accordingly, the above-identified application has been accorded "special" status.

The application is being forwarded to the examiner for action on the merits commensurate with this decision.

Telephone inquiries concerning this decision should be directed to Tod Swann at 571-272-3612

All other inquiries concerning the examination or status of the application is accessible in the PAIR system at http://www.uspto.gov/ebc/index.html.

___/Tod Swann/_____
Tod Swann
Quality Assurance Specialist
Technology Center 2400

UNITED STATES PATENT AND TRADEMARK OFFICE

Commissioner for Patents
United States Patent and Trademark Office
P.O. Box 1450
Alexandria, VA 22313-1450
www.uspto.gov

Muncy, Geissler, Olds & Lowe, PLLC
4000 Legato Road
Suite 310
FAIRFAX VA 22033

MAILED

FEB 14 2011

OFFICE OF PETITIONS

In re Application:
Thoma Sheng et al.
Application No. 12/882,568
Filed: September 15, 2010
Attorney Docket No. 3722/0730PUS1

NOTICE

This is a notice regarding your request for acceptance of a fee deficiency submission under 37 CFR 1.28 filed December 13, 2010. On September 1, 1998, the Court of Appeals for the Federal Circuit held that 37 CFR 1.28(c) is the sole provision governing the time for correction of the erroneous payment of the issue fee as a small entity. **See DH Technology v. Synergystex International, Inc. 154 F.3d 1333, 47 USPQ2d 1865 (Fed. Cir. Sept. 1, 1998).**

The Office no longer investigates or rejects original or reissue applications under 37 CFR 1.56. **1098 Off. Gaz. Pat. Office 502 (January 3, 1989)**. Therefore, nothing in this Notice is intended to imply that an investigation was done.

Your fee deficiency submission under 37 CFR 1.28 is hereby accepted. The petition is **GRANTED**.

This application is no longer entitled to small entity status. Accordingly, all future fees paid in this application must be paid at the large entity rate.

This file is being forwarded to Technology Center 3653.

Telephone inquiries related to this decision should be directed to the Kimberly Inabinet at (571) 272-4618.

/Kimberly Inabinet/
Kimberly Inabinet
Petitions Examiner
Office of Petitions

UNITED STATES PATENT AND TRADEMARK OFFICE

UNITED STATES DEPARTMENT OF COMMERCE
United States Patent and Trademark Office
Address: COMMISSIONER FOR PATENTS
P.O. Box 1450
Alexandria, Virginia 22313-1450
www.uspto.gov

APPLICATION NO.	FILING DATE	FIRST NAMED INVENTOR	ATTORNEY DOCKET NO.	CONFIRMATION NO.
12/882,635	09/15/2010	Tomohiro Hamada	SUTOSH.677AUS	3297

20995 7590 06/17/2011

KNOBBE MARTENS OLSON & BEAR LLP
2040 MAIN STREET
FOURTEENTH FLOOR
IRVINE, CA 92614

EXAMINER	
ART UNIT	PAPER NUMBER
3637	

NOTIFICATION DATE	DELIVERY MODE
06/17/2011	ELECTRONIC

Please find below and/or attached an Office communication concerning this application or proceeding.

The time period for reply, if any, is set in the attached communication.

Notice of the Office communication was sent electronically on above-indicated "Notification Date" to the following e-mail address(es):

jcartee@kmob.com
efiling@kmob.com
eOAPilot@kmob.com

UNITED STATES PATENT AND TRADEMARK OFFICE

Commissioner for Patents
United States Patent and Trademark Office
P.O. Box 1450
Alexandria, VA 22313-1450
www.uspto.gov

JUN 16 2011

KNOBBE MARTENS OLSON & BEAR LLP
2040 MAIN STREET
FOURTEENTH FLOOR
IRVINE CA 92614

In re application of
Hamada et al.
Application No. 12/882,635
Filed: September 15, 2010
For: ELECTRONIC APPARATUS

: **DECISION ON REQUEST TO**
: **PARTICIPATE IN PATENT**
: **PROSECUTION HIGHWAY**
: **PROGRAM AND PETITION**
: **TO MAKE SPECIAL UNDER**
: **37 CFR 1.102(a)**

This is a decision on the request to participate in the Patent Prosecution Highway (PPH) program and the petition under 37 CFR 1.102(a), filed May 09, 2011, to make the above-identified application special.

The request and petition are **GRANTED**.

A grantable request to participate in the PPH program and petition to make special require:

(1) The U.S. application must validly claim priority under 35 U.S.C. 119(a) to one or more applications filed in the JPO, USPTO;
(2) Applicant must submit a copy of the allowable/patentable claim(s) from the JPO application(s) along with an English translation thereof and a statement that the English translation is accurate;
(3) All the claims in the U.S. application must sufficiently correspond or be amended to sufficiently correspond to the allowable/patentable claim(s) in the JPO application(s);
(4) Examination of the U.S. application has not begun;
(5) Applicant must submit a copy of the latest Office action from each of the JPO application(s) containing the allowable/patentable claim(s) along with an English translation thereof and a statement that the English translation is accurate;
(6) Applicant must submit an IDS listing the documents cited by the JPO examiner in the JPO Office action along with copies of documents except U.S. patents or U.S. patent application publications.

In light of the preliminary amendment filed on May 09, 2011, the request to participate in the PPH pilot program complies with the above requirements. Therefore, the above-identified application has been accorded "special" status.

All other inquiries concerning the examination or status of the application should be directed to the Patent Application Information Retrieval (PAIR) system.

The application is being forwarded to the examiner for action on the merits commensurate with this decision.

Any inquiry regarding this decision should be directed to Mikado Buiz, Quality Assurance Specialist, at (571) 272-6578.

/ Mikado Buiz /

Mikado Buiz,
Quality Assurance Specialist
Technology Center 3600

MB/MB: 06/15/11

UNITED STATES PATENT AND TRADEMARK OFFICE

UNITED STATES DEPARTMENT OF COMMERCE
United States Patent and Trademark Office
Address: COMMISSIONER FOR PATENTS
P.O. Box 1450
Alexandria, Virginia 22313-1450
www.uspto.gov

APPLICATION NO.	FILING DATE	FIRST NAMED INVENTOR	ATTORNEY DOCKET NO.	CONFIRMATION NO.
12/882,693	09/15/2010	Wayne S. Littleford	17528/002002	3424

22511 7590 10/22/2010

OSHA LIANG L.L.P.
TWO HOUSTON CENTER
909 FANNIN, SUITE 3500
HOUSTON, TX 77010

EXAMINER	
ART UNIT	PAPER NUMBER
3741	

NOTIFICATION DATE	DELIVERY MODE
10/22/2010	ELECTRONIC

Please find below and/or attached an Office communication concerning this application or proceeding.

The time period for reply, if any, is set in the attached communication.

Notice of the Office communication was sent electronically on above-indicated "Notification Date" to the following e-mail address(es):

docketing@oshaliang.com
buta@oshaliang.com

UNITED STATES PATENT AND TRADEMARK OFFICE

Commissioner for Patents
United States Patent and Trademark Office
P.O. Box 1450
Alexandria, VA 22313-1450
www.uspto.gov

OCT 2 2 2010

OSHA LIANG L.L.P.
TWO HOUSTON CENTER
909 FANNIN, SUITE 3500
HOUSTON TX 77010

In re Application of:
Wayne S. Littleford

Serial No.: 12/882,693

Filed: September 15, 2010

Docket No.: **17528/002002**

DECISION ON PETITION TO MAKE SPECIAL FOR NEW APPLICATION UNDER 37 C.F.R. § 1.102 & M.P.E.P. § 708.02

Title: **CONVERTING CO2 TO AN ALCOHOL**

This is a decision on the petition filed on September 15, 2010 to make the above-identified application special for accelerated examination procedure under 37 C.F.R. § 1.102(d).

The petition to make the application special is GRANTED.

The application is eligible for accelerated examination and the petition complies with the conditions for granting the application special status pursuant to the "Change to Practice for Petitions in Patent Applications to Make Special and for Accelerated Examination" published June 26, 2006, in the Federal Register. (71 Fed. Reg. 36323).

The prosecution of the instant application will be conducted expeditiously according to the following guidelines.

1. The application will be docketed to an examiner and taken up for action within two weeks of the date of this decision.

2. Restriction Practice:
   If the examiner determines that the claims are not directed to a single invention, a telephone request to elect one single invention will be made pursuant to MPEP 812.01. As a prerequisite to the grant of this petition, the applicant has agreed to make an oral election, by telephone, without traverse. If the applicant refuses to make an election without traverse, or the examiner cannot reach the applicant after a reasonable effort, the

examiner will treat the first claimed invention (invention defined by claim 1) as having being constructively elected without traverse for examination.

3. Office action:
If it is determined that, after appropriate consultation, there is a potential rejection or any other issue to be addressed, the examiner will telephone the applicant and arrange an interview to discuss and resolve the issue. An Office action, other than a Notice of Allowance and Fee(s) Due (Notice of Allowance), will not be issued unless either: 1) an interview was conducted but did not result in agreed to action that places the application in condition for allowance, or, 2) a determination is made that an interview would be unlikely to result in the application being placed in condition for allowance, and 3) an internal conference has been held to review any rejection of any claim.

4. Time for Reply:
An Office action other than a Notice of Allowance or a final Office action will set a shortened statutory period of one month or thirty days, whichever is longer, for reply with no extension of time available under 37 CFR 1.136(a). Failure to timely file a reply within this non-extendible period for reply will result in the abandonment of the application.

5. Reply by Applicant:
A timely reply to an Office action other than the Notice of Allowance must be submitted electronically via EFS or EFS-web and limited to addressing the rejections, objections and requirement made. Any amendment that attempts to: 1) add claims which would result in more than three pending independent claims or more than twenty pending total claims; 2) present claims not encompassed by the pre-examination search or an updated accelerated examination support document; or 3) present claims that are directed a non-elected invention or an invention other than that previously claimed and examined in the application, will be treated as not fully responsive and will not be entered.

   For any amendment to the claims (including any new claim) that is not encompassed by the accelerated examination support document, applicant must provide an updated accelerated examination support document that encompasses the amended or new claims at the time of filing of the amendment.

   To proceed expeditiously with the examination, it is recommended that a reply with amendments made to any claim or with any new claim being added be accompanied by an updated accelerated examination support document or a statement explaining how the amended or new claim is supported by the original accelerated examination support document.

6. Information Disclosure Statement (IDS):
Any IDS filed during prosecution must be submitted electronically via EFS or EFS-web, accompanied by an updated accelerated examination support document, and be in compliance with 37 CFR 1.97 and 1.98.

7. Post-Allowance Processing:
   To expedite processing of the allowed application into a patent, the applicant must: 1) pay the required fees within one month of the date of the Notice of Allowance, and 2) not file any post allowance papers not required by the Office. In no event may the issue fee be paid and accepted later than three months from the date of the Notice of Allowance.

8. After-Final and Appeal Procedures:
   To expedite prosecution, after receiving the final Office action, applicant must: 1) promptly file a notice of appeal, an appeal brief and appeal fees; and 2) not request a pre-appeal brief conference.

   Any amendment, affidavit or other evidence filed after final Office action must comply with applicable rules and the requirements outlined in numbered paragraphs 5 and 6 above.

   On appeal, the application will proceed according to normal appeal procedures. After appeal, the application will again be treated special.

9. Proceedings Outside the Normal Examination Process:
   If the application becomes involved in a proceeding that is outside the normal examination process (e.g., a secrecy order, national security review, interference proceeding, petitions under 37 CFR 1.181, 182 or 183), the application will be treated special before and after such proceeding.

10. Final Disposition:
    The twelve month goal of this accelerated examination procedure ends with a final disposition. The mailing of a final Office action, a Notice of Allowance, the filing of a Notice of Appeal, or the filing of a Request for Continued Examination (RCE) is the final disposition.

If, during prosecution, a paper is not filed electronically using EFS-web, a reply is filed but is not fully responsive, the application is involved in an appeal, or a proceeding outside normal examination process, the application will still be examined expeditiously, however, the final disposition may occur more than twelve months from the filing of the application.

Any inquiry regarding this decision should be directed to Marianne C. Seidel, Quality Assurance Specialist, at (571) 272-0584.

/MC Seidel/
Marianne C. Seidel, Quality Assurance Specialist
Technology Center 1600

EAST Search History

EAST Search History (Prior Art)

Ref #	Hits	Search Query	DBs	Default Operator	Plurals	Time Stamp
S1	4	("4446972").PN.	US-PGPUB; USPAT; USOCR; FPRS; EPO; JPO; DERWENT	OR	OFF	2010/11/04 18:12
S2	2	("5485931").PN.	US-PGPUB; USPAT; USOCR; FPRS; EPO; JPO; DERWENT	OR	OFF	2010/11/04 18:12
S3	2	("5547393").PN.	US-PGPUB; USPAT; USOCR; FPRS; EPO; JPO; DERWENT	OR	OFF	2010/11/04 18:14
S4	2	("5917694").PN.	US-PGPUB; USPAT; USOCR; FPRS; EPO; JPO; DERWENT	OR	OFF	2010/11/04 18:14
S5	2	("6305388").PN.	US-PGPUB; USPAT; USOCR; FPRS; EPO; JPO; DERWENT	OR	OFF	2010/11/04 18:16
S6	2	("6318691").PN.	US-PGPUB; USPAT; USOCR; FPRS; EPO; JPO; DERWENT	OR	OFF	2010/11/04 18:17
S7	4	("6703587").PN.	US-PGPUB; USPAT; USOCR; FPRS; EPO; JPO; DERWENT	OR	OFF	2010/11/04 18:17
S8	2	("6769554").PN.	US-PGPUB; USPAT; USOCR; FPRS; EPO; JPO; DERWENT	OR	OFF	2010/11/04 18:19
S9	13	("0279302" | "2180151" | "5992422").PN. OR ("6305388"). URPN.	US-PGPUB; USPAT; USOCR	OR	ON	2010/11/04 18:20
S10	5	("2180151"). URPN.	USPAT	OR	ON	2010/11/04 18:22

S11	2428	206/373	US-PGPUB; USPAT; USOCR; FPRS; EPO; JPO; DERWENT	OR	ON	2010/11/04 18:23
S12	3959043	(sleeve or tube)	US-PGPUB; USPAT; USOCR; FPRS; EPO; JPO; DERWENT	OR	ON	2010/11/04 18:58
S13	287	S11 and S12	US-PGPUB; USPAT; USOCR; FPRS; EPO; JPO; DERWENT	OR	ON	2010/11/04 18:58

EAST Search History (Interference)

< This search history is empty>

11/5/2010 3:47:16 PM
H:\cord management system for appliances.wsp

Doc Code: PET.GREEN
Document Description: Petition for Green Tech Pilot

PTO/SB/420 (03-11)

PETITION TO MAKE SPECIAL UNDER THE GREEN TECHNOLOGY PILOT PROGRAM

Attorney Docket Number: 238383-2	Application Number (if known): 12/882,744	Filing date: 09-15-2010

First Named Inventor: Xiaoming YUAN

Title: APPARATUS AND METHOD FOR DC/AC SYSTEMS TO RIDE THROUGH GRID TRANSIENTS

APPLICANT HEREBY REQUESTS TO PARTICIPATE IN THE GREEN TECHNOLOGY PILOT PROGRAM FOR THE ABOVE-IDENTIFIED APPLICATION. See Instruction Sheet on page 2.

This petition must be timely filed electronically using the USPTO electronic filing system, EFS-Web.

1. By filing this petition:

   Applicant is requesting early publication: Applicant hereby requests early publication under 37 CFR 1.219 and the publication fee set forth in 37 CFR 1.18(d) accompanies this request.

2. By filing this petition: applicant is agreeing to make an election without traverse in a telephonic interview and elect an invention that meets the eligibility requirements for the Green Technology Pilot Program, if the Office determines that the claims are not obviously directed to a single invention. See Instruction Sheet.

3. This request is accompanied by statements of special status for the eligibility requirement.

4. The application contains no more than three (3) independent claims and twenty (20) total claims.

5. The application does not contain any multiple dependent claims.

6. Other attachments: Statement Concerning the Basis for the Special Status

Signature /Allison W. Mages/	Date 12/05/11
Name (Print/Typed) Allison W. Mages	Registration Number 57,275

Note: Signatures of all the inventors or assignees of record of the entire interest or their representative(s) are required in accordance with 37 CFR 1.33 and 11.18. Please see 37 CFR 1.4(d) for the form of the signature. If necessary, submit multiple forms for more than one signature, see below.*

☐ *Total of _____ forms are submitted.

If you need assistance in completing the form, call 1-800-PTO-9199 and select option 2.

IN THE UNITED STATES PATENT AND TRADEMARK OFFICE

First Named Inventor: Xiaoming YUAN	)
Confirmation No.: 3510	)
	)
Serial No.: 12/882,744	)
	)
Filing Date: 09-15-2010	)
	)
Atty Docket No.: 238383-2	)

VIA EFS
Commissioner for Patents
P.O. Box 1450
Alexandria, VA 22313-1450

Statement Concerning the Basis for the Special Status

SIR:

The subject matter disclosed herein relates to solar inverters (also referred to herein as a DC/AC System or a DC/AC Converter System) and more particularly, but not exclusively, to an apparatus and method for solar inverters to ride through grid transients. (See [0001]).

Many countries now or may soon require that photovoltaic (PV) arrays used as electric generation facilities stay connected with the electric grid when the grid is in fault. Remaining connected during a fault (also referred to as a transient, such as a low voltage ride through (LVRT) or zero voltage ride through (ZVRT)) can be challenging from an engineering perspective. (See [0002]).

Conventional DC/AC systems, which convert DC from the array to AC for the grid, are subject to damage if an array remains connected to the grid during a LVRT or ZVRT due to overvoltage in a DC link of the DC/AC system. A PV-side

converter will pump energy in to the DC link while grid-side will have reverse power from the grid due to the large transient. (See [0003]).

Accordingly, a new system and method are needed for a PV array to remain connected to an electricity grid during a transient without suffering damage. (See [0004]).

Embodiments of the invention enable a PV array to remain connected to an electricity grid during a transient without suffering damage. In an embodiment, a converter system, comprises: a DC to AC converter that converts DC from a photovoltaic array to AC for a grid; a maximum power point tracking device coupled to the array; and an array-side control, coupled to the DC to AC converter and the device, that prevents overvoltage in the DC link of the DC to AC converter using array voltage and current data from the device and voltage data from the DC link during a grid transient by adjusting an operating power point of the array to increase array voltage. (See [0005]).

In an embodiment, a method for preventing overvoltage in a DC link of photovoltaic array during a grid transient, comprises: receiving voltage data from the DC link; receiving voltage and current data from the array; and preventing overvoltage in the DC link using DC link voltage data and array voltage data during a grid transient by adjusting an operating power point of the array using an array-side command to increase array voltage. (See [0006]).

Accordingly, Applicant respectfully submits that Special Status is sought on the basis that the embodiments disclosed herein materially contribute to the discovery or development of renewable energy resources (solar energy in this

case) and/or materially contribute the more efficient utilization and conservation of energy resources. Said embodiments allow photovoltaic (PV) arrays (i.e. solar panel arrays) at power generating facilities to stay connected to electric grids when the grids are in a fault state, thereby improving the overall reliability and efficiency of the power grid system.

The undersigned representative may be contacted at the number below to facilitate the resolution of any matters. Please charge any fees that are incurred in connection with this Statement to deposit account no. 09-0470.

Respectfully submitted,

General Electric Company

By : /Allison W. Mages/
Allison W. Mages
Reg. No. 57,275

Dated: December 5, 2011

GE Global Patent Operation
2 Corporate Drive, Suite 648
Shelton, CT 06484
203-944-6730

UNITED STATES PATENT AND TRADEMARK OFFICE

UNITED STATES DEPARTMENT OF COMMERCE
United States Patent and Trademark Office
Address: COMMISSIONER FOR PATENTS
P.O. Box 1450
Alexandria, Virginia 22313-1450
www.uspto.gov

APPLICATION NO.	FILING DATE	FIRST NAMED INVENTOR	ATTORNEY DOCKET NO.	CONFIRMATION NO.
12/882,744	09/15/2010	Xiaoming YUAN	238383-2	3510

52082 7590 12/21/2011

General Electric Company
GE Global Patent Operation
2 Corporate Drive, Suite 648
Shelton, CT 06484

EXAMINER	
LEWIS, MONICA	

ART UNIT	PAPER NUMBER
2838	

NOTIFICATION DATE	DELIVERY MODE
12/21/2011	ELECTRONIC

Please find below and/or attached an Office communication concerning this application or proceeding.

The time period for reply, if any, is set in the attached communication.

Notice of the Office communication was sent electronically on above-indicated "Notification Date" to the following e-mail address(es):

gpo.mail@ge.com
allyson.carnaroli@ge.com

UNITED STATES PATENT AND TRADEMARK OFFICE

Commissioner for Patents
United States Patent and Trademark Office
P.O. Box 1450
Alexandria, VA 22313-1450
www.uspto.gov

General Electric Company
GE Global Patent Operation
2 Corporate Drive, Suite 648
Shelton CT 06484

DEC 21 2011

In re Application of :
YUAN et al. : DECISION ON PETITION
Application No. 12/882,744 : TO MAKE SPECIAL UNDER
Filed: September 15, 2010 : THE GREEN TECHNOLOGY
Attorney Docket No. 238383-2 : PILOT PROGRAM

This is a decision on the petition under 37 CFR 1.102, filed on December 5, 2011, to make the above-identified application special under the pilot program for applications pertaining to Green Technologies as set forth 74 Federal Register Notice 64666 (December 8, 2009) and amended by 75 Federal Register Notice 28554 (May 21, 2010) and 75 Federal Register Notice 69049 (November 10, 2010).

The petition is **GRANTED**.

A grantable petition to make an application special under 37 CFR 1.102 and the pilot program as set forth in 74 FR 64666 must be directed to a nonprovisional application filed under 35 USC 111(a) or be a national stage entry under 35 USC 371, exclusive of any reissue applications.

In order to qualify for special status, the following requirements must be met. 1) The application must have no more than 3 independent claims and no more than 20 total claims. 2) The application must not contain any multiple dependent claims. 3) The petition must state the basis for seeking special status, i.e., the claimed invention either: A) materially enhances the quality of the environment or B) materially contributes to: i) the discovery or development of renewable energy resources, ii) the more efficient utilization and conservation of energy resources, or iii) greenhouse gas emission reduction. 4) If the disclosure is not clear on its face that the claimed invention materially contributes under category (A) or (B), the petition must be accompanied by a statement by the applicant, assignee, or an attorney/agent registered to practice before the Office explaining how the materiality standard is met. 5) A statement that applicant will agree to make an election without traverse in a telephonic interview if a restriction requirement is made by the examiner. 6) The petition to make special must be filed electronically. 7) The petition must be filed at least one day prior to the date that a first Office Action appears in the Patent Application Information Retrieval (PAIR) system. 8) The petition must be accompanied by a request for early publication in compliance with 37 CFR 1.219 and include the publication fee as set forth in 37 CFR 1.18(d).

The requirement for a fee for consideration of the petition to make special for applications pertaining to Green Technologies has been waived.

The instant petition complies with items 1 – 8 above. Accordingly, the above-identified application has been accorded "special" status.

Telephone inquires concerning this decision should be directed to Colleen Dunn at 571-272-1170.

The application is being forwarded to the appropriate Technology Center Art Unit for action on the merits commensurate with this decision.

/Colleen Dunn/

Colleen Dunn
TQAS, TC 2800

UNITED STATES PATENT AND TRADEMARK OFFICE

Commissioner for Patents
United States Patent and Trademark Office
P.O. Box 1450
Alexandria, VA 22313-1450
www.uspto.gov

Decision Date : March 14, 2012

In re Application of :

Fujio Masuoka

DECISION ON PETITION

UNDER CFR 1.313(c)(2)

Application No : 12882771

Filed : 15-Sep-2010

Attorney Docket No : 13773/78

This is an electronic decision on the petition under 37 CFR 1.313(c)(2), filed March 14, 2012 , to withdraw the above-identified application from issue after payment of the issue fee.

The petition is **GRANTED.**

The above-identified application is withdrawn from issue for consideration of a submission under 37 CFR 1.114 (request for continued examination). See 37 CFR 1.313(c)(2).

Petitioner is advised that the issue fee paid in this application cannot be refunded. If, however, this application is again allowed, petitioner may request that it be applied towards the issue fee required by the new Notice of Allowance.

Telephone inquiries concerning this decision should be directed to the Patent Electronic Business Center (EBC) at 866-217-9197.

This application file is being referred to Technology Center AU 2815 for processing of the request for continuing examination under 37 CFR 1.114 .

Office of Petitions

Doc Code: PET.AUTO Document Description: Petition automatically granted by EFS-Web	PTO/SB/140 U.S. Patent and Trademark Office Department of Commerce

Electronic Petition Request	**PETITION TO WITHDRAW AN APPLICATION FROM ISSUE AFTER PAYMENT OF THE ISSUE FEE UNDER 37 CFR 1.313(c)**
Application Number	12882771
Filing Date	15-Sep-2010
First Named Inventor	Fujio Masuoka
Art Unit	2815
Examiner Name	EUGENE LEE
Attorney Docket Number	13773/78
Title	SRAM SEMICONDUCTOR DEVICE USING SURROUNDING GATE TRANSISTORS

An application may be withdrawn from issue for further action upon petition by the applicant. To request that the Office withdraw an application from issue, applicant must file a petition under this section including the fee set forth in § 1.17(h) and a showing of good and sufficient reasons why withdrawal of the application from issue is necessary.

APPLICANT HEREBY PETITIONS TO WITHDRAW THIS APPLICATION FROM ISSUE UNDER 37 CFR 1.313(c).

A grantable petition requires the following items:
(1) Petition fee; and
(2) One of the following reasons:
(a) Unpatentability of one or more claims, which must be accompanied by an unequivocal statement that one or more claims are unpatentable, an amendment to such claim or claims, and an explanation as to how the amendment causes such claim or claims to be patentable;
(b) Consideration of a request for continued examination in compliance with § 1.114 (for a utility or plant application only); or
(c) Express abandonment of the application. Such express abandonment may be in favor of a continuing application, but not a CPA under 37 CFR 1.53(d).

Petition Fee

☐ Applicant claims SMALL ENTITY status. See 37 CFR 1.27.

☐ Applicant is no longer claiming SMALL ENTITY status. See 37 CFR 1.27(g)(2).

☒ Applicant(s) status remains as SMALL ENTITY.

☐ Applicant(s) status remains as other than SMALL ENTITY

Reason for withdrawal from issue

◯ One or more claims are unpatentable ◉ Consideration of a request for continued examination (RCE) (List of Required Documents and Fees) ◯ Applicant hereby expressly abandons the instant application (any attorney/agent signing for this reason must have power of attorney pursuant to 37 CFR 1.32(b)).
RCE request,submission, and fee. ☐ I certify, in accordance with 37 CFR 1.4(d)(4) that : The RCE request ,submission, and fee have already been filed in the above-identified application on ☒ Are attached.
THIS PORTION MUST BE COMPLETED BY THE SIGNATORY OR SIGNATORIES I certify, in accordance with 37 CFR 1.4(d)(4) that I am: ◉ An attorney or agent registered to practice before the Patent and Trademark Office who has been given power of attorney in this application. ◯ An attorney or agent registered to practice before the Patent and Trademark Office, acting in a representative capacity. ◯ A sole inventor ◯ A joint inventor; I certify that I am authorized to sign this submission on behalf of all of the inventors ◯ A joint inventor; all of whom are signing this e-petition ◯ The assignee of record of the entire interest that has properly made itself of record pursuant to 37 CFR 3.71

Signature	/Tadashi Horie/
Name	Tadashi Horie
Registration Number	40437

UNITED STATES PATENT AND TRADEMARK OFFICE

Commissioner for Patents
United States Patent and Trademark Office
P.O. Box 1450
Alexandria, VA 22313-1450
www.uspto.gov

CLARK & ELBING LLP
101 FEDERAL STREET
BOSTON MA 02110

MAILED

DEC 03 2010

OFFICE OF PETITIONS

ON PETITION

In re Application of :
Krukonis, et al. :
Application No. 12/882,783 :
Filed: September 15, 2010 :
Attorney Docket No. 07678/116003 :
For: REDUCTION OF CONSTITUENTS IN TOBACCO

This is a decision on the petition captioned under 37 CFR 1.57(a)(3), filed September 30, 2010 to accord a filing date of September 15, 2010, to the above-identified application. The petition will be treated under 37 CFR 1.53(e)(2)[1].

The petition under 37 CFR 1.53(e)(2) is **GRANTED**.

The application was deposited on September 15, 2010. However, on September 29, 2010, the Office of Patent Application Processing mailed a "Notice of Incomplete Nonprovisional Application" requiring drawings of applicants' invention and stating that the filing date would be the date of receipt of the omitted drawings. It is noted that the specification filed on September 15, 2010 references drawing figures, but no drawing figures were filed on September 15, 2010.

As stated in MPEP 601.01(f), it is the practice of the United States Patent and Trademark Office (PTO) to treat an application that contains at least one process, method, or composition claim as an application for which a drawing is not necessary for an understanding of the invention under 35 U.S.C. 113 (first sentence.)

MPEP 601.01(f) also states that:

> A nonprovisional application having at least one claim, or a provisional application having at least some disclosure, directed to the subject matter

[1] Any request for review of a notification pursuant to paragraph (e)(1) of this section, or a notification that the original application papers lack a portion of the specification or drawing(s), must be by way of a petition pursuant to this paragraph accompanied by the fee set forth in § 1.17(f). In the absence of a timely (§ 1.181(f)) petition pursuant to this paragraph, the filing date of an application in which the applicant was notified of a filing error pursuant to paragraph (e)(1) of this section will be the date the filing error is corrected.

> discussed above for which a drawing is usually not considered essential for a filing date, describing drawing figures in the specification, but filed without drawings will be treated as an application filed without all of the drawings figures referred to in the specification as discussed in MPEP 601.01(g), so long as the application contains something that can be construed as a written description.

This application contains method claims. Therefore, the application should have been treated as an application filed without all of the drawing figures referred to in the specification as discussed in MPEP 601.01(g).

MPEP 601.01(g) states that if an application is filed without all of the drawing figures referred to in the specification, a "Notice of Omitted Items" is mailed indicating that the application has been accorded a filing date, but is lacking some of the figures of drawings described in the specification.

In view of the above, the "Notice" mailed September 29, 2010 was mailed in error and is hereby withdrawn. The application is entitled to a filing date of September 15, 2010. The petition under 37 CFR 1.53(e) is **granted**.

Since the application is entitled to a filing date, a petition under 37 CFR 1.57(a) is unnecessary to add the missing figures. The $400.00 petition fee will be refunded to deposit account no. 03-2095. The examiner of record will consider the preliminary amendment requesting insertion of the figures, which were incorporated by reference.

Pursuant to this decision, the application will be referred to Office of Patent Application Processing for:

- **correction of the filing date to September 15, 2010**;
- **for indication in Office records, as appropriate, that "0" sheets of drawings were present on filing** and
- **for issuance of a filing receipt.**

Entry of the amendment filed September 30, 2010 will be determined by the examiner.

Telephone inquiries specific to this matter should be directed to the undersigned at (571) 272-3230.

Shirene Willis Brantley

Shirene Willis Brantley
Senior Petitions Attorney
Office of Petitions

UNITED STATES PATENT AND TRADEMARK OFFICE

UNITED STATES DEPARTMENT OF COMMERCE
United States Patent and Trademark Office
Address: COMMISSIONER FOR PATENTS
P.O. Box 1450
Alexandria, Virginia 22313-1450
www.uspto.gov

APPLICATION NO.	FILING DATE	FIRST NAMED INVENTOR	ATTORNEY DOCKET NO.	CONFIRMATION NO.
12/882,790	09/15/2010	Yanjie Jiang	14131-0078002	3595

26161 7590 09/23/2010

FISH & RICHARDSON PC
P.O. BOX 1022
MINNEAPOLIS, MN 55440-1022

EXAMINER	
ART UNIT	PAPER NUMBER
1657	

NOTIFICATION DATE	DELIVERY MODE
09/23/2010	ELECTRONIC

Please find below and/or attached an Office communication concerning this application or proceeding.

The time period for reply, if any, is set in the attached communication.

Notice of the Office communication was sent electronically on above-indicated "Notification Date" to the following e-mail address(es):

PATDOCTC@fr.com

UNITED STATES PATENT AND TRADEMARK OFFICE

Commissioner for Patents
United States Patent and Trademark Office
P.O. Box 1450
Alexandria, VA 22313-1450
www.uspto.gov

SEP 2 3 2010

FISH & RICHARDSON PC
P.O. BOX 1022
MINNEAPOLIS MN 55440-1022

In re Application of:
Jiang et al.

Serial No.: 12/882,790

Filed: September 15, 2010

Docket No.: **14131-0078002**

DECISION ON PETITION TO MAKE SPECIAL FOR NEW APPLICATION UNDER 37 C.F.R. § 1.102 & M.P.E.P. § 708.02

Title: **ANALYSIS OF AMINO ACID COPOLYMER COMPOSITIONS**

This is a decision on the petition filed on September 15, 2010 to make the above-identified application special for accelerated examination procedure under 37 C.F.R. § 1.102(d).

The petition to make the application special is GRANTED.

The application is eligible for accelerated examination and the petition complies with the conditions for granting the application special status pursuant to the "Change to Practice for Petitions in Patent Applications to Make Special and for Accelerated Examination" published June 26, 2006, in the Federal Register. (71 Fed. Reg. 36323).

The prosecution of the instant application will be conducted expeditiously according to the following guidelines.

1. The application will be docketed to an examiner and taken up for action within two weeks of the date of this decision.

2. Restriction Practice:
If the examiner determines that the claims are not directed to a single invention, a telephone request to elect one single invention will be made pursuant to MPEP 812.01. As a prerequisite to the grant of this petition, the applicant has agreed to make an oral election, by telephone, without traverse. If the applicant refuses to make an election without traverse, or the examiner cannot reach the applicant after a reasonable effort, the examiner will treat the first claimed invention (invention defined by claim 1) as having being constructively elected without traverse for examination.

3. Office action:
   If it is determined that, after appropriate consultation, there is a potential rejection or any other issue to be addressed, the examiner will telephone the applicant and arrange an interview to discuss and resolve the issue. An Office action, other than a Notice of Allowance and Fee(s) Due (Notice of Allowance), will not be issued unless either: 1) an interview was conducted but did not result in agreed to action that places the application in condition for allowance, or, 2) a determination is made that an interview would be unlikely to result in the application being placed in condition for allowance, and 3) an internal conference has been held to review any rejection of any claim.

4. Time for Reply:
   An Office action other than a Notice of Allowance or a final Office action will set a shortened statutory period of one month or thirty days, whichever is longer, for reply with no extension of time available under 37 CFR 1.136(a). Failure to timely file a reply within this non-extendible period for reply will result in the abandonment of the application.

5. Reply by Applicant:
   A timely reply to an Office action other than the Notice of Allowance must be submitted electronically via EFS or EFS-web and limited to addressing the rejections, objections and requirement made. Any amendment that attempts to: 1) add claims which would result in more than three pending independent claims or more than twenty pending total claims; 2) present claims not encompassed by the pre-examination search or an updated accelerated examination support document; or 3) present claims that are directed a non-elected invention or an invention other than that previously claimed and examined in the application, will be treated as not fully responsive and will not be entered.

   For any amendment to the claims (including any new claim) that is not encompassed by the accelerated examination support document, applicant must provide an updated accelerated examination support document that encompasses the amended or new claims at the time of filing of the amendment.

   To proceed expeditiously with the examination, it is recommended that a reply with amendments made to any claim or with any new claim being added be accompanied by an updated accelerated examination support document or a statement explaining how the amended or new claim is supported by the original accelerated examination support document.

6. Information Disclosure Statement (IDS):
   Any IDS filed during prosecution must be submitted electronically via EFS or EFS-web, accompanied by an updated accelerated examination support document, and be in compliance with 37 CFR 1.97 and 1.98.

7. Post-Allowance Processing:
   To expedite processing of the allowed application into a patent, the applicant must: 1) pay the required fees within one month of the date of the Notice of Allowance, and 2) not file any post allowance papers not required by the Office. In no event may the issue fee be paid and accepted later than three months from the date of the Notice of Allowance.

8. After-Final and Appeal Procedures:
   To expedite prosecution, after receiving the final Office action, applicant must: 1) promptly file a notice of appeal, an appeal brief and appeal fees; and 2) not request a pre-appeal brief conference.

   Any amendment, affidavit or other evidence filed after final Office action must comply with applicable rules and the requirements outlined in numbered paragraphs 5 and 6 above.

   On appeal, the application will proceed according to normal appeal procedures. After appeal, the application will again be treated special.

9. Proceedings Outside the Normal Examination Process:
   If the application becomes involved in a proceeding that is outside the normal examination process (e.g., a secrecy order, national security review, interference proceeding, petitions under 37 CFR 1.181, 182 or 183), the application will be treated special before and after such proceeding.

10. Final Disposition:
    The twelve month goal of this accelerated examination procedure ends with a final disposition. The mailing of a final Office action, a Notice of Allowance, the filing of a Notice of Appeal, or the filing of a Request for Continued Examination (RCE) is the final disposition.

If, during prosecution, a paper is not filed electronically using EFS-web, a reply is filed but is not fully responsive, the application is involved in an appeal, or a proceeding outside normal examination process, the application will still be examined expeditiously, however, the final disposition may occur more than twelve months from the filing of the application.

Any inquiry regarding this decision should be directed to Marianne C. Seidel, Quality Assurance Specialist, at (571) 272-0584.

/MC Seidel/
Marianne C. Seidel, Quality Assurance Specialist
Technology Center 1600

UNITED STATES PATENT AND TRADEMARK OFFICE

UNITED STATES DEPARTMENT OF COMMERCE
United States Patent and Trademark Office
Address: COMMISSIONER FOR PATENTS
P.O. Box 1450
Alexandria, Virginia 22313-1450
www.uspto.gov

APPLICATION NO.	FILING DATE	FIRST NAMED INVENTOR	ATTORNEY DOCKET NO.	CONFIRMATION NO.
12/882,867	09/15/2010	Takeshi MORIKAWA	325772061900	3734

25227 7590 11/15/2011

MORRISON & FOERSTER LLP
1650 TYSONS BOULEVARD
SUITE 400
MCLEAN, VA 22102

EXAMINER	
ZIMMERMAN, MARK K	

ART UNIT	PAPER NUMBER
2625	

NOTIFICATION DATE	DELIVERY MODE
11/15/2011	ELECTRONIC

Please find below and/or attached an Office communication concerning this application or proceeding.

The time period for reply, if any, is set in the attached communication.

Notice of the Office communication was sent electronically on above-indicated "Notification Date" to the following e-mail address(es):

EOfficeVA@mofo.com
drcaldwell@mofo.com
PatentDocket@mofo.com

UNITED STATES PATENT AND TRADEMARK OFFICE

Commissioner for Patents
United States Patent and Trademark Office
P.O. Box 1450
Alexandria, VA 22313-1450
www.uspto.gov

MORRISON & FOERSTER LLP
1650 TYSONS BOULEVARD
SUITE 400
MCLEAN VA 22102

In re Application of
MORIKAWA et al.
Application No.: 12/882,867
Filed: 15 September 2010
Attorney Docket No.: 325772061900
For: METHOD, SYSTEM, AND APPARATUS FOR OUTPUTTING IMAGE ...

: DECISION ON REQUEST TO
: PARTICIPATE IN THE PATENT
: PROSECUTION HIGHWAY
: PROGRAM AND PETITION
: TO MAKE SPECIAL UNDER
: 37 CFR 1.102(a)

This is a decision on the request to participate in the Patent Prosecution Highway (PPH) program and the petition under 37 CFR 1.102(a), filed 26 October 2011, to make the above-identified application special.

The request and petition are **GRANTED**.

Discussion

A grantable request to participate in the PPH pilot program and petition to make special require:

1. The U.S. application is
    a. a Paris Convention application which either
        i. validly claims priority under 35 U.S.C. 119(a) and 37 CFR 1.55 to one or more applications filed in the JPO, or
        ii. validly claims priority to a PCT application that contains no priority claims, or
    b. a national stage application under the PCT (an application which entered the national stage in the U.S. from a PCT international application after compliance with 35 U.S.C. 371), which PCT application
        i. validly claims priority to an application filed in the JPO, or
        ii. validly claims priority to a PCT application that contains no priority claims, or
        iii. contains no priority claim, or
    c. a so-called bypass application filed under 35 U.S.C. 111(a) which validly claims benefit under 35 U.S.C. 120 to a PCT application, which PCT application
        i. validly claims priority to an application filed in the JPO, or
        ii. validly claims priority to a PCT application that contains no priority claims, or

iii. contains no priority claim;

2. Applicant must submit a copy of:
   a. The allowable/patentable claim(s) from the JPO application(s);
   b. An English translation of the allowable/patentable claim(s) and
   c. A statement that the English translation is accurate;
3. Applicant must:
   a. Ensure all the claims in the U.S. application must sufficiently correspond or be amended to sufficiently correspond to the allowable/patentable claim(s) in the JPO application(s) and
   b. Submit a claims correspondence table in English;
4. Examination of the U.S. application has not begun;
5. Applicant must submit:
   a. Documentation of prior office action:
      i. a copy of the office action(s) just prior to the "Decision to Grant a Patent" from each of the JPO application(s) containing the allowable/patentable claim(s) or
      ii. if the allowable/patentable claims(s) are from a "Notification of Reasons for Refusal" then the Notification of Reasons for Refusal or
      iii. if the JPO application is a first action allowance then no office action from the JPO is necessary should be indicated on the request/petition form;
   b. An English language translation of the JPO Office action from (5)(a)(i)-(ii) above
   c. A statement that the English translation is accurate;
6. Applicant must submit:
   a. An IDS listing the documents cited by the JPO examiner in the JPO office action (unless already submitted in this application)
   b. Copies of the documents except U.S. patents or U.S. patent application publications (unless already submitted in this application);

The request to participate in the PPH pilot program and petition comply with the above requirements. Accordingly, the above-identified application has been accorded "special" status.

Inquiries concerning this decision should be directed to Lee W. Young at 571-272-4549.

All other inquiries concerning the examination or status of the application is accessible in the PAIR system at http://www.uspto.gov/ebc.index.html.

This application will be forwarded to the examiner for action on the merits commensurate with this decision once this application's formality reviews have been completed.

Lee W. Young
Quality Assurance Specialist
Technology Center 2600

Doc Code: PET.GREEN
Document Description: Petition for Green Tech Pilot

PTO/SB/420 (11-10)
Approved for use through 01/31/2011. OMB 0651-0062
U.S. Patent and Trademark Office; U. S. DEPARTMENT OF COMMERCE
Under the Paperwork Reduction Act of 1995, no persons are required to respond to a collection of information unless it displays a valid OMB control number.

PETITION TO MAKE SPECIAL UNDER THE GREEN TECHNOLOGY PILOT PROGRAM

Attorney Docket Number: 40173-701.201	Application Number (if known): 12/882,901	Filing date: September 15, 2010
First Named Inventor: Michael Matelich		
Title: NOx Removal System for Biogas Engines at Anaerobic Digestion Facilities		

APPLICANT HEREBY REQUESTS TO PARTICIPATE IN THE GREEN TECHNOLOGY PILOT PROGRAM FOR THE ABOVE-IDENTIFIED APPLICATION. See Instruction Sheet on page 2.

This petition must be timely filed electronically using the USPTO electronic filing system, EFS-Web.

1. By filing this petition:

   Applicant is requesting early publication: Applicant hereby requests early publication under 37 CFR 1.219 and the publication fee set forth in 37 CFR 1.18(d) accompanies this request.

2. By filing this petition: applicant is agreeing to make an election without traverse in a telephonic interview and elect an invention that meets the eligibility requirements for the Green Technology Pilot Program, if the Office determines that the claims are not obviously directed to a single invention. See Instruction Sheet.

3. This request is accompanied by statements of special status for the eligibility requirement.

4. The application contains no more than three (3) independent claims and twenty (20) total claims.

5. The application does not contain any multiple dependent claims.

6. Other attachments: Response to Missing Parts and Preliminary Amendment

Signature	Date November 30, 2010
Name (Print/Typed) Matthew J. Bresnahan	Registration Number 62,452

Note: *Signatures of all the inventors or assignees of record of the entire interest or their representative(s) are required in accordance with 37 CFR 1.33 and 11.18. Please see 37 CFR 1.4(d) for the form of the signature. If necessary, submit multiple forms for more than one signature see below*.*

[X] *Total of 1 forms are submitted.

The information is required to obtain or retain a benefit by the public which is to file (and by the USPTO to process) an application. Confidentiality is governed by 35 U.S.C. 122 and 37 CFR 1.11 and 1.14. This collection is estimated to take 12 hours to complete, including gathering, preparing, and submitting the completed application form to the USPTO. Time will vary depending upon the individual case. Any comments on the amount of time you require to complete this form and/or suggestions for reducing this burden, should be sent to the Chief Information Officer, U.S. Patent and Trademark Office, U.S. Department of Commerce, P.O. Box 1450, Alexandria, VA 22313-1450. DO NOT SEND FEES OR COMPLETED FORMS TO THIS ADDRESS. **SEND TO: Commissioner for Patents, P.O. Box 1450, Alexandria, VA 22313-1450.**

If you need assistance in completing the form, call 1-800-PTO-9199 and select option 2.

PATENT
Attorney Docket No. 40173-701.201

IN THE UNITED STATES PATENT AND TRADEMARK OFFICE

In re Application:		Confirmation No.:	**3805**
Inventor:	Michael Matelich	Examiner:	Not Yet Assigned
Application No.:	12/882,901	Group Art Unit:	Not Yet Assigned
Filed:	September 15, 2010	Customer No.	**21971**
Title:	**NOx REMOVAL SYSTEM FOR BIOGAS ENGINES AT ANAEROBIC DIGESTION FACILITIES**		

FILED ELECTRONICALLY ON: NOVEMBER 30, 2010

STATEMENT ACCOMPANYING PETITION TO MAKE SPECIAL UNDER THE GREEN TECHNOLOGY PILOT PROGRAM

Commissioner for Patents
P.O. Box 1450
Alexandria, VA 22313-1450

Dear Sir or Madam:

Applicant submits herewith the following statement accompanying a Petition to Make Special under the Green Technology Pilot Program (the "Petition"). The subject matter of the pending claims relates to methods, systems, reactors, and devices for reducing NOx emissions. As such, the instant application qualifies to be made special under the Green Technology Pilot Program for at least the reason that the instantly claimed subject matter is directed to reducing greenhouse gas emissions. The subject matter described herein also qualifies because it is directed to enhancing the environment, it contributes to the development of renewable energy resources, and/or it also contributes to energy efficiency and conservation. The applicant encloses herewith the Petition form PTO/SB/420 and a preliminary amendment presenting no more than 3 independent claims and no more than 20 dependent claims as required under the program.

CONCLUSION

Applicant respectfully requests that the Examiner accept this Petition to Make Special under the Green Technology Pilot Program and advance the application to issue. The Commissioner is authorized to charge any additional fees which may be required, including any petition, extension of time, or early publication fees to Deposit Account No. 23-2415 (Docket No. 40173-701.201).

Respectfully submitted,

Date: November 30, 2010

By: _____
Matthew J. Bresnahan, Esq.
Registration No. 62,452

WILSON SONSINI GOODRICH & ROSATI
650 Page Mill Road
Palo Alto, CA 94304-1050
Direct Dial: (858) 350-2226
Customer No. 21971

UNITED STATES PATENT AND TRADEMARK OFFICE

UNITED STATES DEPARTMENT OF COMMERCE
United States Patent and Trademark Office
Address: COMMISSIONER FOR PATENTS
P.O. Box 1450
Alexandria, Virginia 22313-1450
www.uspto.gov

APPLICATION NO.	FILING DATE	FIRST NAMED INVENTOR	ATTORNEY DOCKET NO.	CONFIRMATION NO.
12/882,901	09/15/2010	Michael Matelich	40173-701.201	3805

21971 7590 12/22/2010
WILSON, SONSINI, GOODRICH & ROSATI
650 PAGE MILL ROAD
PALO ALTO, CA 94304-1050

EXAMINER	
ART UNIT	PAPER NUMBER
1772	

MAIL DATE	DELIVERY MODE
12/22/2010	PAPER

Please find below and/or attached an Office communication concerning this application or proceeding.

The time period for reply, if any, is set in the attached communication.

UNITED STATES PATENT AND TRADEMARK OFFICE

Commissioner for Patents
United States Patent and Trademark Office
P.O. Box 1450
Alexandria, VA 22313-1450
www.uspto.gov

DEC 2 2 2010

WILSON, SONSINI, GOODRICH & ROSATI
650 PAGE MILL ROAD
PALO ALTO CA 94304-1050

In re Application of	:	
Michael Matelich	:	DECISION ON PETITION
Application No. 12/882,901	:	TO MAKE SPECIAL UNDER
Filed: September 15, 2010	:	THE GREEN TECHNOLOGY
Attorney Docket No. 40173-701.201	:	PILOT PROGRAM

This is a decision on the petition under 37 CFR 1.102, filed November 30, 2010, to make the above-identified application special under the pilot program for applications pertaining to Green Technologies as set forth in 74 Federal Register Notice 64666 (December 8, 2009) and amended by 75 Federal Register Notice 28554 (May 21, 2010) and 75 Federal Register Notice 69049 (November 10, 2010).

The petition is **GRANTED**.

A grantable petition to make an application special under 37 CFR 1.102 and the pilot program as set forth in 74 FR 64666 must be directed to a nonprovisional application filed under 35 USC 111(a) or be a national stage entry under 35 USC 371, exclusive of any reissue applications.

In order to qualify for special status, the following requirements must be met. 1) The application must have no more than 3 independent claims and no more than 20 total claims. 2) The application must not contain any multiple dependent claims. 3) The petition must state the basis for seeking special status, i.e., the claimed invention either: A) materially enhances the quality of the environment or B) materially contributes to: i) the discovery or development of renewable energy resources, ii) the more efficient utilization and conservation of energy resources, or iii) greenhouse gas emission reduction. 4) If the disclosure is not clear on its face that the claimed invention materially contributes under category (A) or (B), the petition must be accompanied by a statement by the applicant, assignee, or an attorney/agent registered to practice before the Office explaining how the materiality standard is met. 5) A statement that applicant will agree to make an election without traverse in a telephonic interview if a restriction requirement is made by the examiner. 6) The petition to make special must be filed electronically. 7) The petition must be filed at least one day prior to the date that a first Office Action appears in the Patent Application Information Retrieval (PAIR) system. 8) The petition must be accompanied by a request for early publication in compliance with 37 CFR 1.219 and include the publication fee as set forth in 37 CFR 1.18(d).

The requirement for a fee for consideration of the petition to make special for applications pertaining to Green Technologies has been waived.

The instant petition complies with items 1 – 8 above. Accordingly, the above-identified application has been accorded "special" status.

Telephone inquires concerning this decision should be directed to Blaine Copenheaver at 571-272-1156.

The application is being forwarded to the examiner for action on the merits commensurate with this decision.

/Blaine Copenheaver/

Blaine Copenheaver
Quality Assurance Specialist
Technology Center 1700

PATENT
ATTORNEY DOCKET NO. 50666/004001

IN THE UNITED STATES PATENT AND TRADEMARK OFFICE

Applicant:	Andrew Ball et al.	Confirmation No.:	3852
Serial No.:	12/882,927	Art Unit:	1646
Filed:	September 15, 2010	Examiner:	Not yet assigned
Customer No.:	21559		
Title:	NUCLEIC ACID MOLECULE		

STATEMENT OF SPECIAL STATUS FOR ELIGIBILITY REQUIREMENT

In connection with Applicants' petition to make the above-captioned case special under the Green Technology Pilot Program, Applicants state that this application meets the requirements for special status. The claims are directed to a single invention that materially contributes to the discovery or development of renewable energy resources and the more efficient utilization and conservation of energy resources. In particular, the claims are directed to nucleic acid molecules that encode polypeptides capable of producing a triterpenoid hydrocarbon and methods for using these nucleic acids. The triterpenoid hydrocarbon finds use as a biofuel intermediate.

Respectfully submitted,

Date: 25 May 2011

Karen L. Elbing, Ph.D.
Reg. No. 35,238

Clark & Elbing LLP
101 Federal Street
Boston, MA 02110
Telephone: 617-428-0200
Facsimile: 617-428-7045

Doc Code: PET.GREEN
Document Description: Petition for Green Tech Pilot

PTO/SB/420 (03-11)

PETITION TO MAKE SPECIAL UNDER THE GREEN TECHNOLOGY PILOT PROGRAM

Attorney Docket Number: 50666/004001	Application Number (if known): 12/882,927	Filing date: September 15, 2010

First Named Inventor: Andrew Ball et al.

Title: NUCLEIC ACID MOLECULE

APPLICANT HEREBY REQUESTS TO PARTICIPATE IN THE GREEN TECHNOLOGY PILOT PROGRAM FOR THE ABOVE-IDENTIFIED APPLICATION. See Instruction Sheet on page 2.

This petition must be timely filed electronically using the USPTO electronic filing system, EFS-Web.

1. By filing this petition:

   Applicant is requesting early publication: Applicant hereby requests early publication under 37 CFR 1.219 and the publication fee set forth in 37 CFR 1.18(d) accompanies this request.

2. By filing this petition: applicant is agreeing to make an election without traverse in a telephonic interview and elect an invention that meets the eligibility requirements for the Green Technology Pilot Program, if the Office determines that the claims are not obviously directed to a single invention. See Instruction Sheet.

3. This request is accompanied by statements of special status for the eligibility requirement.

4. The application contains no more than three (3) independent claims and twenty (20) total claims.

5. The application does not contain any multiple dependent claims.

6. Other attachments: Preliminary Amendment (5 pages)

Signature	Date 25 May 2011
Name (Print/Typed) Karen L. Elbing, Ph.D.	Registration Number 35,238

Note: *Signatures of all the inventors or assignees of record of the entire interest or their representative(s) are required in accordance with 37 CFR 1.33 and 11.18. Please see 37 CFR 1.4(d) for the form of the signature. If necessary, submit multiple forms for more than one signature, see below*.*

■ *Total of 1 forms are submitted.

If you need assistance in completing the form, call 1-800-PTO-9199 and select option 2.

UNITED STATES PATENT AND TRADEMARK OFFICE

UNITED STATES DEPARTMENT OF COMMERCE
United States Patent and Trademark Office
Address: COMMISSIONER FOR PATENTS
P.O. Box 1450
Alexandria, Virginia 22313-1450
www.uspto.gov

APPLICATION NO.	FILING DATE	FIRST NAMED INVENTOR	ATTORNEY DOCKET NO.	CONFIRMATION NO.
12/882,927	09/15/2010	Andrew Ball	50666/004001	3852

21559 7590 06/07/2011

CLARK & ELBING LLP
101 FEDERAL STREET
BOSTON, MA 02110

EXAMINER	
SAIDHA, TEKCHAND	
ART UNIT	**PAPER NUMBER**
1652	

NOTIFICATION DATE	DELIVERY MODE
06/07/2011	ELECTRONIC

Please find below and/or attached an Office communication concerning this application or proceeding.

The time period for reply, if any, is set in the attached communication.

Notice of the Office communication was sent electronically on above-indicated "Notification Date" to the following e-mail address(es):

patentadministrator@clarkelbing.com

UNITED STATES PATENT AND TRADEMARK OFFICE

Commissioner for Patents
United States Patent and Trademark Office
P.O. Box 1450
Alexandria, VA 22313-1450
www.uspto.gov

JUN 0 7 2011

CLARK & ELBING LLP
101 FEDERAL STREET
BOSTON MA 02110

In re Application of :

BALL, Andrew *et al.*	:	DECISION ON PETITION
Application No. 12/882927	:	TO MAKE SPECIAL UNDER
Filed: September 15, 2010	:	THE GREEN TECHNOLOGY
Attorney Docket No. 50666/004001	:	PILOT PROGRAM

This is a decision on the petition under 37 CFR 1.102, filed May 25, 2011, to make the above-identified application special under the pilot program for applications pertaining to Green Technologies as set forth in 74 Federal Register Notice 64666 (December 8, 2009) and amended by 75 Federal Register Notice 28554 (May 21, 2010) and 75 Federal Register Notice 69049 (November 10, 2010).

The petition is **GRANTED**.

A grantable petition to make an application special under 37 CFR 1.102 and the pilot program as set forth in 74 FR 64666 must be directed to a nonprovisional application filed under 35 USC 111(a) or be a national stage entry under 35 USC 371, exclusive of any reissue applications.

In order to qualify for special status, the following requirements must be met. 1) The application must have no more than 3 independent claims and no more than 20 total claims. 2) The application must not contain any multiple dependent claims. 3) The petition must state the basis for seeking special status, i.e., the claimed invention either: A) materially enhances the quality of the environment or B) materially contributes to: i) the discovery or development of renewable energy resources, ii) the more efficient utilization and conservation of energy resources, or iii) greenhouse gas emission reduction. 4) If the disclosure is not clear on its face that the claimed invention materially contributes under category (A) or (B), the petition must be accompanied by a statement by the applicant, assignee, or an attorney/agent registered to practice before the Office explaining how the materiality standard is met. 5) A statement that applicant will agree to make an election without traverse in a telephonic interview if a restriction requirement is made by the examiner. 6) The petition to make special must be filed electronically. 7) The petition must be filed at least one day prior to the date that a first Office Action appears in the Patent Application Information Retrieval (PAIR) system. 8) The petition must be accompanied by a request for early publication in compliance with 37 CFR 1.219 and include the publication fee as set forth in 37 CFR 1.18(d).

The requirement for a fee for consideration of the petition to make special for applications pertaining to Green Technologies has been waived.

The instant petition complies with items 1 – 8 above. Accordingly, the above-identified application has been accorded "special" status.

Telephone inquires concerning this decision should be directed to Manjunath Rao at 571-272-0939.

The application is being forwarded to the Technology Center Art Unit 1646 for action on the merits commensurate with this decision.

/Manjunath Rao/

Manjunath Rao
Supervisory Patent Examiner &
POC for TC 1600 Green Tech Petitions
Technology Center 1600

UNITED STATES PATENT AND TRADEMARK OFFICE

Commissioner for Patents
United States Patent and Trademark Office
P.O. Box 1450
Alexandria, VA 22313-1450
www.uspto.gov

PAUL, HASTINGS, JANOFSKY & WALKER LLP
875 15th Street, NW
Washington DC 20005

MAILED

NOV 12 2010

OFFICE OF PETITIONS

In re Application of	:	
Ralph Mason et al.	:	
Application No. 12/882,930	:	DECISION ON PETITION
Filed: September 15, 2010	:	TO WITHDRAW
Attorney Docket No. 36729.00002.UTL	:	FROM RECORD
	:	

This is a decision on the Request to Withdraw as attorney or agent under 37 C.F.R. § 1.36(b) filed October 19, 2010.

The request is **NOT APPROVED**.

The Office will no longer approve requests from practitioners to withdraw from applications where the requesting practitioner is acting, or has acted, in a representative capacity pursuant to 37 CFR 1.34. In these situations, the practitioner is responsible for the correspondence the practitioner files in the application while acting in a representative capacity. As such, there is no need for the practitioner to obtain the Office's permission to withdraw from representation. However, practitioners acting in a representative capacity, like practitioners who have a power of attorney in the application, remain responsible for noncompliance with 37 CFR 1.56, as well as 37 CFR 10.18, with respect to documents they file.

A review of the file record indicates that Todd M. Schneider and all attorneys/agents associated with customer number 36183 do not have power of attorney, but has acted in a representative capacity in this patent application. See 37 C.F.R. § 10.40. Accordingly, the request to withdraw under 37 C.F.R. § 1.36(b) is not applicable.

The correspondence address can not be changed because the address is not that of: (1) the first named inventor; or (2) an assignee of the entire interest under 37 C.F.R 3.71. If an assignee has ownership in this application, then a current Statement under 37 CFR 3.73(b) or a copy of the actual assignment must be provided with a new request for change of correspondence address.

Telephone inquires concerning this decision should be directed to the undersigned at 571-272-4618

/Kimberly Inabinet/

Kimberly Inabinet
Petitions Examiner
Office of Petitions

UNITED STATES PATENT AND TRADEMARK OFFICE

Commissioner for Patents
United States Patent and Trademark Office
P.O. Box 1450
Alexandria, VA 22313-1450
www.uspto.gov

BORDEN LADNER GERVAIS LLP
ANNE KINSMAN
WORLD EXCHANGE PLAZA
100 QUEEN STREET SUITE 1100
OTTAWA ON K1P 1J9 CA CANADA

MAILED

DEC 23 2011

OFFICE OF PETITIONS

In re Application of :
Hakjune Oh et al :
Application No. 12/882,931 : DECISION GRANTING PETITION
Filed: September 15, 2010 : UNDER 37 CFR 1.313(c)(2)
Attorney Docket No. PAT 3730B-2 :

This is a decision on the petition under 37 CFR 1.313(c)(2), filed, December 21, 2011 to withdraw the above-identified application from issue after payment of the issue fee.

The petition is **GRANTED**.

The above-identified application is withdrawn from issue for consideration of a submission under 37 CFR 1.114 (request for continued examination). *See* 37 CFR 1.313(c)(2).

Petitioner is advised that the issue fee paid on December 5, 2011 in the above-identified application cannot be refunded. If, however, the above-identified application is again allowed, petitioner may request that it be applied towards the issue fee required by the new Notice of Allowance.[1]

Telephone inquiries should be directed to Irvin Dingle at (571) 272-3210.

This matter is being referred to Technology Center AU 2827 for processing of the request for continued examination under 37 CFR 1.114 and for consideration of the concurrently filed Information Disclosure Statement.

/Irvin Dingle/
Irvin Dingle
Petitions Examiner
Office of Petitions

[1] The request to apply the issue fee to the new Notice may be satisfied by completing and returning the new Issue Fee Transmittal Form PTOL-85(b), which includes the following language thereon: Commissioner for Patents is requested to apply the Issue Fee and Publication Fee (if any) or re-apply any previously paid issue fee to the application identified above. Petitioner is advised that, whether a fee is indicated as being due or not, the Issue Fee Transmittal Form **must** be completed and timely submitted to avoid abandonment. Note the language in bold text on the first page of the Notice of Allowance and Fee(s) Due (PTOL-85).

Doc Code: PET.GREEN
Document Description: Petition for Green Tech Pilot

PTO/SB/420 (03-11)

PETITION TO MAKE SPECIAL UNDER THE GREEN TECHNOLOGY PILOT PROGRAM

Attorney Docket Number:	17135/043002	Application Number (if known):	12/882,968-Conf. #3923
Filing date: September 15, 2010			
First Named Inventor:	Giles A. Hill, III		
Title:	SELF-PUMPING VENT HOLES FOR COOLING SOLID RUBBER TIRE AND METHOD OF CONSTRUCTION		

APPLICANT HEREBY REQUESTS TO PARTICIPATE IN THE GREEN TECHNOLOGY PILOT PROGRAM FOR THE ABOVE-IDENTIFIED APPLICATION. See Instruction Sheet on page 2.

This petition must be timely filed electronically using the USPTO electronic filing system, EFS-Web.

1. By filing this petition:

   Applicant is requesting early publication: Applicant hereby requests early publication under 37 CFR 1.219 and the publication fee set forth in 37 CFR 1.18(d) accompanies this request.

2. By filing this petition: applicant is agreeing to make an election without traverse in a telephonic interview and elect an invention that meets the eligibility requirements for the Green Technology Pilot Program, if the Office determines that the claims are not obviously directed to a single invention. See Instruction Sheet.

3. This request is accompanied by statements of special status for the eligibility requirement.

4. The application contains no more than three (3) independent claims and twenty (20) total claims.

5. The application does not contain any multiple dependent claims.

6. Other attachments: STATEMENT DIRECTED TO ENVIRONMENTAL QUALITY, EFFICIENT UTILIZATION AND CONSERVATION OF ENERGY RESOURCES, AND GREENHOUSE GAS EMISSION REDUCTION FOR PETITION TO MAKE SPECIAL UNDER THE GREEN TECHNOLOGY PILOT PROGRAM 37 C.F.R. 1.102

Signature	/john w. montgomery/	Date	August 26, 2011
Name (Print/Typed)	John W. Montgomery	Registration Number	31,124

Note: Signatures of all the inventors or assignees of record of the entire interest or their representative(s) are required in accordance with 37 CFR 1.33 and 11.18. Please see 37 CFR 1.4(d) for the form of the signature. If necessary, submit multiple forms if more than one signature, see below.*

☐ *Total of 1 forms are submitted.

Docket No.: 17135/043002
(PATENT)

IN THE UNITED STATES PATENT AND TRADEMARK OFFICE

In re Patent Application of:
Giles A. Hill III et al.

Application No.: 12/882,968

Filed: September 15, 2010

For: SELF-PUMPING VENT HOLES FOR COOLING SOLID RUBBER TIRE AND METHOD OF CONSTRUCTION

Confirmation No.: 3923

Art Unit: 1747

Examiner: Not Yet Assigned

STATEMENT DIRECTED TO ENVIRONMENTAL QUALITY, EFFICIENT UTILIZATION AND CONSERVATION OF ENERGY RESOURCES, AND GREENHOUSE GAS EMISSION REDUCTION FOR PETITION TO MAKE SPECIAL UNDER THE GREEN TECHNOLOGY PILOT PROGRAM
37 C.F.R. 1.102

MS Petition
Commissioner for Patents
P.O. Box 1450
Alexandria, VA 22313-1450

Dear Sir:

Submitted herewith, concurrently with a Petition to Make Special under the Green Technology Pilot Program for the above-identified patent application, is a statement that the claimed invention materially enhances the quality of the environment, materially contributes to the utilization and conservation of energy resources, and materially reduces greenhouse gas emissions.

Upon entry of a preliminary amendment in compliance with 37 C.F.R. 1.121, filed August 25, 2011, the patent application at the time of this petition contains no more than

three independent claims and twenty total claims. The application does not contain any multiple dependent claims. The Applicants are requesting and do hereby request early publication under 37 CFR 1.219 and the required fee accompanies the request. The Applicants also agree to make an election without traverse in a telephonic interview and to elect an invention that meets the eligibility requirements for the Green Technology Pilot Program, if the Office determines that the claims are not obviously directed to a single invention.

In support of this Statement, the Applicants submit that using tires of the present invention rather than the currently-used tires could generate the following estimated significant benefits to energy resources and to the environment resulting from dramatically improved usable life of tires according to the present invention:

- It is estimated that as many as approximately 67,400 fewer tires could be used annually in the scrap metal recycling and steel production industry;
- As much as 1.82 million MCF annually of natural gas not consumed (*i.e.*, conserved) during the manufacturing process;
- As much as 3,033,000 gallons annually of diesel fuel not used (*i.e.*, conserved) in transportation of the tires from a manufacturer to a consumer;
- As much as 285.0 million pounds (or 129,727 metric tons) of carbon dioxide avoided annually, and

- As many as 67,400 fewer tires annually not placed in a landfill from failed tires.

The foregoing benefits may be understood to result from the solid rubber tires according to the present invention having dramatically increased useful life in the special use industry of recycling of scrap metal and production of steel at scrap yards and at steel mills. In these environments, efficiency of operation demands avoidance of deflation of air filled tires due to sharp objects (e.g., steel, scrap metal) and destruction of solid rubber vehicle tires and foam filled tires due to over heating from continuous use. The solid rubber self cooling tires according to the present invention are particularly beneficial for continuous service on heavy equipment vehicles used in the scrap metal recycling industry (hereinafter, "Vehicles"). These Vehicles are typically large front end loaders operating with four large tires. In the case of solid rubber tires and foam filled tires each tire can weigh about 4000 lbs. In the case of air filled tires such tires cannot normally be operated at full speed of the Vehicle for full efficiency due to the risk of cutting, puncture and down time for replacement. Efficient use of the scrap metal recycling facilities also typically requires multiple shifts of vehicle operators so that the Vehicles are in continuous service without long intervening down time. Due to the cooling capabilities of the inventive self pumping vent holes of the solid rubber tire according to the invention, the solid rubber tires of the present invention have a useful life under the indicated special use conditions that is estimated to be as much as 43 times longer compared to the life of prior solid rubber tires that are not made according to the invention. The exact comparison for air filled tires is not specifically available, at least in part due to the inconsistency of operation, the procedures at the facility that increase or reduce risk of puncture, and the amount of operator care individually

exercised to avoid puncture. It is estimated that solid rubber tires according to prior technology last longer than air filled tires in this environment and that foam filled tires have a useful life comparable to that of prior solid rubber tires where such foam filled tires can also suffer from overheating in the special environment of continuous use in a scrap metal facility as described.

Assuming all the tires currently used have the same useful life as prior solid rubber tires and assuming all tires in this special use field are replaced with the self venting solid rubber tire of the present invention, the increased useful tire life of the present invention is translatable into tens of thousands fewer tires used annually. Using fewer tires could result in large fuel savings both for production of the tires and for transportation of the tires to end users. Fuel usage savings are further estimated to result in a correspondingly large decrease in carbon dioxide (green house gas) formation. In view of the size of the tire and amount of rubber used to make each tire (e.g., about 4000lbs each for solid rubber tires) the use of fewer tires is further estimated to result in a large decrease in the amount of rubber, solid or foam rubber, discarded and placed in landfills. In support of this Statement, Applicants respectfully submit the following analysis:

It may be estimated that approximately 67,400 fewer tires would be used annually in the scrap metal recycling and steel production industry, estimated as follows:

1. the present invention relates to the manufacture of a solid rubber tire used by certain industrial equipment specially adapted for use in scrap metal shredding , recycling and production of steel more efficiently and/or with better conservation of environmental resources than prior solid rubber tires used for those purposes;

2. in the U.S., it is estimated that there are approximately 1,200 specialized use motor vehicles (each a "Vehicle") that are used in multiple continuous-use shifts by companies that recycle and/or produce steel and other metals. The Vehicles each use four tires whose requirements for continuous use without deflation due to punctures are met by the present invention, accounting for an estimated 4,800 tires. At a given time, it is estimated 75% of these Vehicles are operating under continuous service conditions. In other words, it is estimated that 3,600 tires (*i.e.*, 75% of the total of the 4,800 tires of the Vehicles) corresponding to 900 Vehicles (*i.e.*, 75% of the estimated total of 1,200 Vehicles) are in continuous service;

3. "continuous service" as described above is considered to be operating multiple shifts during a 24 hour period for 5 or more days per week without an intervening 8-16 hour period of non-use to allow for cooling of the tires. For example, operation of a Vehicle at a facility 24 hours per day (e.g., 3 shifts x 8 hours per shift), 5 days per week for 48 weeks per year, is equivalent to about 5,760 hours of operation per year per Vehicle;

4. the estimated average life of non-puncturing, solid rubber tires currently used by a Vehicle in continuous service is approximately 300 hours, and the average weight of each tire currently used by each Vehicle is approximately 4,000 pounds. Foam filled tires might be estimated to have a comparable life expectancy in this environment and air filled tires could last a longer period or shorter period depending upon the puncture rate at a given facility. For purposes of this presentation it will be considered that all tires are used at normal operating speeds of the specialized Vehicles (i.e., not limiting the speeds by locking them into lower gears,

reduced speed rules or with governors) in the environment described will have a similar useful life expectancy;

5. the estimated average life of the tires of the present invention, when used by a Vehicle in continuous service, is approximately 13,000 hours, and the average weight of each tire of the present invention is approximately 4,000 pounds. In other words, based upon the estimates presented here, while the average weight of each tire of the present invention is approximately the same as the average weight of each solid rubber tire and each foam filled tire currently used by a Vehicle in this environment, the average life of each tire of the present invention is approximately 43 times (*i.e.*, 13,000 hours/300 hours = 43.3) longer than the average life of a solid rubber tire currently used by a Vehicle in the same continuous service conditions;

6. based upon 5,760 operating hours per Vehicle per year (see paragraph 3 above) and 900 Vehicles (see paragraph 2 above) and again estimating an average life of 300 hours for each currently-used tire (see paragraph 4. above), approximately 69,000 currently-used tires would be consumed annually [*i.e.*, (5,760 annual operating hours/300 hours operating life) × 900 Vehicles × 4 tires per Vehicle indicates about 69,000 tires annually];

7. based upon 5,760 annual operating hours per Vehicle (see paragraph 3 above) and 900 Vehicles (see paragraph 2 above) and an estimated average life of 13,000 hours for each tire of the present invention (see paragraph 5 above), approximately 1,600 self venting tires of the present invention would be consumed annually [*i.e.*, (5,760 annual operating

hours/13,000 hours operating life) × 900 Vehicles × 4 tires per Vehicle gives about 1600 tires annually];

8. based on paragraphs 6 and 7 above, and assuming all the tires could be replaced by the tires according to the present invention, consumption of the currently-used tires would exceed consumption of the tires of the present invention by approximately 67,400 tires annually (*i.e.*, 69,000 of the 300 hour tires – 1,600 of the 13000 hour tires of the present invention);

As much as 1.82 million MCF annually of natural gas not consumed (*i.e.*, conserved) during the manufacturing process, estimated as follows:

9. manufacturing of solid rubber tires (whether currently-used solid rubber tires or tires of the present invention) is estimated to require approximately 27 MCF (thousand cubic feet) of natural gas per tire;

10. based on paragraphs 8 and 9 above, and assuming all the tires replaced required that same amount of energy to produce, approximately 1,819,800 MCF (*i.e.*, 67,400 tires × 27 MCF per tire) of natural gas would be avoided by using the 13000 hour tires of the present invention instead of the currently-used 300 hour solid rubber tires (the energy consumption for producing air filled or foam filled tires is not currently known for this analysis);

Approximately 3,033,000 gallons annually of diesel fuel not used (*i.e.*, conserved) in transportation of the tires from a manufacturer to a consumer, estimated as follows:

11. transporting such tires (whether currently-used tires or tires of the present invention) by a truck carrying 4 to 8 tires at a time is a common practice, where the average gas mileage of such a truck transporting such tires is approximately 5 miles per gallon (MPG) fully loaded and up to 10 MPG empty;

12. the distance that a truck transporting such tires (whether currently-used tires or tires of the present invention) travels from a single manufacturing location is estimated to be 1,200 miles fully loaded at 5 MPG one way delivery to scrap yard facilities throughout the US and an equal number of return trips empty at 10 MPG (note that the present calculation assume empty return trips and do not include the portion of return trips loaded with discarded tires where the fuel consumption is expected to be between 5 MPG and 10 MPG);

13. the currently-used 300 hour solid rubber tires and the 13000 hour tires of the present invention weigh approximately the same (see paragraph 5 above), and based on a truck transporting 8 currently-used tires per trip (see paragraph 11 above) over a distance of 1,200 miles per trip (see paragraph 12 above), using the tires of the present invention instead of the currently-used tires saves approximately 3,033,000 gallons of diesel fuel annually (*i.e.*, (67,400 tires/8 tires per trip × 1,200 miles per trip/5 miles per gallon) + (8425 trips × 1200miles per trip /10 MPG) would indicate about 3,033,000 gallons annually);

As much as 285 million pounds (or 129,727 metric tons) of carbon dioxide avoided annually, estimated as follows:

14. burning one million British Thermal Units (MMBTUs) of natural gas generates 117 pounds of carbon dioxide[1];

15. one thousand cubic feet (MCF) of natural gas is equivalent to 1.027 million BTUs (MMBTUs)[2];

16. a metric ton is equal to 2,204.623 pounds[3];

17. based on paragraphs 10, 14, 15, and 16 above, approximately as much as 218.66 million pounds [or 99,185 metric tons] of CO_2, (*i.e.*, 1,819,800 MCF × 1.027 MMBTU per MCF × 117 pounds of CO_2 per MMBTU ÷ 2,204.623 pounds per metric ton), could be avoided annually with respect to natural gas by using the tires of the present invention instead of using 300 hour solid rubber tires;

18. according to the U.S. Environmental Protection Agency, carbon dioxide emissions from a gallon of diesel fuel is 22.2 pounds[4];

19. based on paragraphs 13, 16, and 18 above, as much as approximately 67.33 million pounds [or 30,542 metric tons] of CO_2 could be avoided annually (*i.e.*, 3,033,000 gallons of diesel fuel annually × 22.2 pounds of CO_2 per gallon ÷ 2,204.623 pounds per metric

[1] http://www.naturalgas.org/environment/naturalgas.asp
[2] http://www.eia.doe.gov/tools/faqs/faq.cfm?id=45&t=8
[3] http://www.infoplease.com/ipa/A0001661.html
[4] http://www.epa.gov/otaq/climate/420f05001.htm

ton) with respect to diesel fuel by using the tires of the present invention instead of 300 hour solid rubber tires;

20. based upon paragraphs 17 and 19 above, the total estimated CO_2 avoided could be as much as about 285 million pounds of CO_2 annually [or 129,727 metric tons] (*i.e.*, about 218.66 million pounds [or 99,185 metric tons] could be avoided by burning less natural gas + about 67.33 million pounds [or 30,542 metric tons] of CO_2 could be avoided by not burning diesel fuel due to transportation of fewer tires).

As many as approximately 67,400 rubber tires annually not placed in a landfill from failed tires, estimated as follows:

21. based on 1 - 8 above, approximately 67,400 tires would be avoided from being placed in landfills annually by using 13000 hour tires of the present invention instead of 300 hour solid rubber tires;

In summary, and based upon the estimates according to the discussions above, using tires of the present invention rather than the currently-used tires as described could generate the following estimated significant benefits to energy resources and to the environment:

- As many as approximately 67,400 fewer solid rubber tires could be used annually in the scrap metal recycling and steel production industry;

- As much as approximately 1.82 million MCF annually of natural gas not consumed (*i.e.*, conserved) during the manufacturing process;

- As much as approximately 3,033,000 gallons annually of diesel fuel not used (*i.e.*, conserved) in transportation of the tires from a single site manufacturer to consumers nationwide;

- As much as approximately 285.0 million pounds (or 129,727 metric tons) of carbon dioxide might be avoided annually, and

- As many as 67,400 rubber tires annually might not be placed in a landfill from failed tires.

Applicants believe that the above statement is directed to (1) materially contribute to efficient utilization and conservation of energy resources, (2) materially contribute to greenhouse gas emission reduction, and (3) enhancement of the quality of the environment (through, for example, a significant reduction in landfill) sufficient to provide a concise statement of the utility of the invention as defined in each of the independent claims, as required under the Petition to Make Special Under The Green Technology Pilot Program.

Applicants believe no additional fee is due with this petition statement. Specifically, the $130 fee for a petition under 37 C.F.R. 1.102 has been *sua sponte* waived. However, if additional fees are due, the Director is hereby authorized to charge any deficiency in the fees filed, asserted to be filed, or which should have been filed herewith (or with any paper

hereafter filed in this application by this firm), to our Deposit Account No. 50-0591, under Order No. 17135/043002.

Dated: August 26, 2011

Respectfully submitted,

By /john w. montgomery/

John W. Montgomery
Registration No.: 31,124
OSHA · LIANG LLP
909 Fannin Street, Suite 3500
Houston, Texas 77010
(713) 228-8600
(713) 228-8778 (Fax)

Attorney for Applicants

UNITED STATES PATENT AND TRADEMARK OFFICE

UNITED STATES DEPARTMENT OF COMMERCE
United States Patent and Trademark Office
Address: COMMISSIONER FOR PATENTS
P.O. Box 1450
Alexandria, Virginia 22313-1450
www.uspto.gov

APPLICATION NO.	FILING DATE	FIRST NAMED INVENTOR	ATTORNEY DOCKET NO.	CONFIRMATION NO.
12/882,968	09/15/2010	Giles A. Hill III	17135/043002	3923

22511 7590 09/20/2011

OSHA LIANG L.L.P.
TWO HOUSTON CENTER
909 FANNIN, SUITE 3500
HOUSTON, TX 77010

EXAMINER	
ART UNIT	PAPER NUMBER
1747	

NOTIFICATION DATE	DELIVERY MODE
09/20/2011	ELECTRONIC

Please find below and/or attached an Office communication concerning this application or proceeding.

The time period for reply, if any, is set in the attached communication.

Notice of the Office communication was sent electronically on above-indicated "Notification Date" to the following e-mail address(es):

docketing@oshaliang.com
hathaway@oshaliang.com
kennedy@oshaliang.com

UNITED STATES PATENT AND TRADEMARK OFFICE

Commissioner for Patents
United States Patent and Trademark Office
P.O. Box 1450
Alexandria, VA 22313-1450
www.uspto.gov

OSHA LIANG L.L.P.
TWO HOUSTON CENTER
909 FANNIN, SUITE 3500
HOUSTON TX 77010

9/20/11

In re Application of :
Hill et al. : DECISION ON PETITION
Application No. 12/882,968 : TO MAKE SPECIAL UNDER
Filed: 9/15/2010 : THE GREEN TECHNOLOGY
Attorney Docket No. **17135/043002** : PILOT PROGRAM

This is a decision on the petition under 37 CFR 1.102, filed 8/26/2011, to make the above-identified application special under the pilot program for applications pertaining to Green Technologies as set forth in 74 Federal Register Notice 64666 (December 8, 2009) and amended by 75 Federal Register Notice 28554 (May 21, 2010) and 75 Federal Register Notice 69049 (November 10, 2010).

The petition is **GRANTED**.

A grantable petition to make an application special under 37 CFR 1.102 and the pilot program as set forth in 74 FR 64666 must be directed to a nonprovisional application filed under 35 USC 111(a) or be a national stage entry under 35 USC 371, exclusive of any reissue applications.

In order to qualify for special status, the following requirements must be met. 1) The application must have no more than 3 independent claims and no more than 20 total claims. 2) The application must not contain any multiple dependent claims. 3) The petition must state the basis for seeking special status, i.e., the claimed invention either: A) materially enhances the quality of the environment or B) materially contributes to: i) the discovery or development of renewable energy resources, ii) the more efficient utilization and conservation of energy resources, or iii) greenhouse gas emission reduction. 4) If the disclosure is not clear on its face that the claimed invention materially contributes under category (A) or (B), the petition must be accompanied by a statement by the applicant, assignee, or an attorney/agent registered to practice before the Office explaining how the materiality standard is met. 5) A statement that applicant will agree to make an election without traverse in a telephonic interview if a restriction requirement is made by the examiner. 6) The petition to make special must be filed electronically. 7) The petition must be filed at least one day prior to the date that a first Office Action appears in the Patent Application Information Retrieval (PAIR) system. 8) The petition must be accompanied by a request for early publication in compliance with 37 CFR 1.219 and include the publication fee as set forth in 37 CFR 1.18(d).

The requirement for a fee for consideration of the petition to make special for applications pertaining to Green Technologies has been waived.

The instant petition complies with items 1 – 8 above. Accordingly, the above-identified application has been accorded "special" status.

Telephone inquires concerning this decision should be directed to Tom Dunn at 571-272-1171.

The application is being forwarded to the Technology Center Art Unit 1747 for action on the merits commensurate with this decision.

/Tom Dunn/

Tom Dunn
Quality Assurance Specialist
Technology Center 1700

UNITED STATES PATENT AND TRADEMARK OFFICE

COMMISSIONER FOR PATENTS
UNITED STATES PATENT AND TRADEMARK OFFICE
P.O. BOX 1450
ALEXANDRIA, VA 22313-1450
WWW.USPTO.GOV

Paper No.

MAILED
JUL 07 2011
OFFICE OF PETITIONS

GENENTECH, INC.
1 DNA WAY
SOUTH SAN FRANCISCO CA 94080

In re Application of :
Chuntharapai et al. :
Application No. 12/882,980 : DECISION ON PETITION
Filed: September 15, 2010 : PURSUANT TO
Attorney Docket No. P1810R1C4 : 37 C.F.R. § 1.137(B)
Title: ANTI-INTERFERON-ALPHA :
ANTIBODIES :

This is a decision on the petition pursuant to 37 C.F.R. § 1.137(b), filed May 3, 2011, to revive the above-identified application.

This petition pursuant to 37 C.F.R. § 1.137(b) is **GRANTED**.

The above-identified application became abandoned for failure to fully reply in a timely manner to the Notice of Missing Parts (notice), mailed October 1, 2010, which set a shortened statutory period for reply of two months. No response was received, and no extensions of time under the provisions of 37 C.F.R. § 1.136(a) were requested. Accordingly, the above-identified application became abandoned on December 2, 2010.

A grantable petition pursuant to 37 C.F.R. § 1.137(b) must be accompanied by:

(1) The reply required to the outstanding Office action or notice, unless previously filed;
(2) The petition fee as set forth in 37 C.F.R. § 1.17(m);
(3) A statement that the entire delay in filing the required reply from the due date for the reply until the filing of a grantable petition pursuant to this paragraph was unintentional. The Commissioner may require additional information where there is a question whether the delay was

unintentional, and;

(4) Any terminal disclaimer (and fee as set forth in 37 C.F.R. § 1.20(d)) required pursuant to paragraph (d) of this section.

With this petition, Petitioner has submitted the filing fee along with the surcharge associated with the late submission of the same, the petition fee, the fees associated with the filing of excess claims, the search and examination fees, and the proper statement of unintentional delay.

The first three requirements of Rule 1.137(b) have been met. The fourth requirement of Rule 1.137(b) is not applicable, as a terminal disclaimer is not required.[1]

The Office of Patent Application Processing (OPAP) will be notified of this decision, and jurisdiction over the application is transferred to OPAP, so that the application may receive further processing. Petitioner will receive appropriate notifications regarding the fees owed, if any, and other information in due course from OPAP.

Petitioner may find it beneficial to view Private PAIR within a fortnight of the present decision to ensure that the revival has been acknowledged by OPAP in response to this decision. It is noted that all inquiries with regard to any failure of that change in status should be directed to OPAP where that change of status must be effected - **the Office of Petitions cannot effectuate a change of status.**

The general phone number for OPAP is 571-272-4000. Telephone inquiries **regarding this decision** should be directed to the undersigned at (571) 272-3225.[2]

/Paul Shanoski/
Paul Shanoski
Senior Attorney
Office of Petitions

---

1 See Rule 1.137(d).

2 Petitioner will note that all practice before the Office should be in writing, and the action of the Office will be based exclusively on the written record in the Office. See 37 C.F.R. § 1.2. As such, Petitioner is reminded that no telephone discussion may be controlling or considered authority for any further action(s) of Petitioner.

UNITED STATES PATENT AND TRADEMARK OFFICE

Commissioner for Patents
United States Patent and Trademark Office
P.O. Box 1450
Alexandria, VA 22313-1450
www.uspto.gov

In re Application of
Clarence E. Fivecoate

Application No. 12882995

Filed: September 15,2010

Attorney Docket No. CF012057

:
:
:DECISION ON PETITION TO MAKE SPECIAL
:UNDER 37 CFR 1.102(c)(1)
:

This is a decision on the electronic petition under 37 CFR 1.102 (c)(1), filed 11-OCT-2010 to make the above-identified application special based on applicant's age as set forth in MPEP § 708.02, Section IV.

The petition is **GRANTED**.

A grantable petition to make an application special under 37 CFR 1.102(c)(1), MPEP § 708.02, Section IV: Applicant's Age must include a statement by applicant or a registered practitioner having evidence that applicant is at least 65 years of age. No fee is required.

Accordingly, the above-identified application has been accorded "special" status and will be taken up for action by the examiner upon the completion of all pre-examination processing.

Telephone inquiries concerning this electronic decision should be directed to the Electronic Business Center at 866-217-9197.

All other inquiries concerning either the examination or status of the application should be directed to the Technology Center.

UNITED STATES PATENT AND TRADEMARK OFFICE

Commissioner for Patents
United States Patent and Trademark Office
P.O. Box 1450
Alexandria, VA 22313-1450
www.uspto.gov

MAILED

JUN 21 2011

OFFICE OF PETITIONS

GLENN PATENT GROUP
3475 EDISON WAY SUITE L
MENLO PARK CA 94025

In re Application of :
Jimenez, et al. :
Application No. 12/883,058 : ON PETITION
Filed: September 15, 2010 :
Attorney Docket No. VUT-029 :

This is a decision on the petition to revive under 37 CFR 1.137(b), filed June 8, 2011.

The petition under 37 CFR 1.137(b) is **GRANTED**.

The above-identified application became abandoned for failure to timely file a reply to the Notice to File Missing Parts, mailed September 29, 2010. This Notice set an extendable period for reply of two (2) months for applicant to submit replacement drawings and an executed oath or declaration, together with the surcharge for its late filing. No reply having been received, the application became abandoned on November 30, 2010. The Office mailed a Notice of Abandonment on June 8, 2011.

With the instant petition, applicants paid the petition fee, made the proper statement of unintentional delay, and submitted the required reply in the form of replacement drawings, and an executed declaration and surcharge.

The application is being forwarded to the Office of Patent Application Processing for pre-examination processing.

Telephone inquiries related to this decision should be directed to the undersigned at (571)272-3207.

Cliff Congo
Petitions Attorney
Office of Petitions

UNITED STATES PATENT AND TRADEMARK OFFICE

UNITED STATES DEPARTMENT OF COMMERCE
United States Patent and Trademark Office
Address: COMMISSIONER FOR PATENTS
P.O. Box 1450
Alexandria, Virginia 22313-1450
www.uspto.gov

APPLICATION NO.	FILING DATE	FIRST NAMED INVENTOR	ATTORNEY DOCKET NO.	CONFIRMATION NO.
12/883,077	09/15/2010	Adrian Travis	327909.04	4112

69316 7590 01/26/2011

MICROSOFT CORPORATION
ONE MICROSOFT WAY
REDMOND, WA 98052

EXAMINER	
HEALY, BRIAN	
ART UNIT	**PAPER NUMBER**
2883	

NOTIFICATION DATE	DELIVERY MODE
01/26/2011	ELECTRONIC

Please find below and/or attached an Office communication concerning this application or proceeding.

The time period for reply, if any, is set in the attached communication.

Notice of the Office communication was sent electronically on above-indicated "Notification Date" to the following e-mail address(es):

DBOUTON@MICROSOFT.COM
vffiling@microsoft.com
stevensp@microsoft.com

UNITED STATES PATENT AND TRADEMARK OFFICE

Commissioner for Patents
United States Patent and Trademark Office
P.O. Box 1450
Alexandria, VA 22313-1450
www.uspto.gov

MICROSOFT CORPORATION
ONE MICROSOFT WAY
REDMOND WA 98052

In re Application of: TRAVIS et al. Serial No.: 12/883,077 Filed: September 15, 2010 Title: EFFICIENT COLLIMATION OF LIGHT WITH OPTICAL WEDGE	:	DECISION ON PETITION TO MAKE SPECIAL FOR NEW APPLICATION UNDER 37 C.F.R. § 1.102 & M.P.E.P. § 708.02

This is a decision on the petition to make the above-identified application special for accelerated examination procedure under 37 C.F.R. § 1.102(d) filed September 15, 2010.

The petition to make the application special is GRANTED.

The application is eligible for accelerated examination and the petition complies with the conditions for granting the application special status pursuant to the "Change to Practice for Petitions in Patent Applications to Make Special and for Accelerated Examination" published June 26, 2006, in the Federal Register. (71 Fed. Reg. 36323).

The prosecution of the instant application will be conducted expeditiously according to the following guidelines.

1. The application will be docketed to an examiner and taken up for action within two weeks of the date of this decision.

2. Restriction Practice:
   If the examiner determines that the claims are not directed to a single invention, a telephone request to elect one single invention will be made pursuant to MPEP 812.01. As a prerequisite to the grant of this petition, the applicant has agreed to make an oral election, by telephone, without traverse. If the applicant refuses to make an election without traverse, or the examiner cannot reach the applicant after a reasonable effort, the examiner will treat the first claimed invention (invention defined by claim 1) as having being constructively elected without traverse for examination.

3. Office action:
If it is determined that, after appropriate consultation, there is a potential rejection or any other issue to be addressed, the examiner will telephone the applicant and arrange an interview to discuss and resolve the issue. An Office action, other than a Notice of Allowance and Fee(s) Due (Notice of Allowance), will not be issued unless either: 1) an interview was conducted but did not result in agreed to action that places the application in condition for allowance, or, 2) a determination is made that an interview would be unlikely to result in the application being placed in condition for allowance, and 3) an internal conference has been held to review any rejection of any claim.

4. Time for Reply:
An Office action other than a Notice of Allowance or a final Office action will set a shortened statutory period of one month or thirty days, whichever is longer, for reply with no extension of time available under 37 CFR 1.136(a). Failure to timely file a reply within this non-extendible period for reply will result in the abandonment of the application.

5. Reply by Applicant:
A timely reply to an Office action other than the Notice of Allowance must be submitted electronically via EFS or EFS-web and limited to addressing the rejections, objections and requirement made. Any amendment that attempts to: 1) add claims which would result in more than three pending independent claims or more than twenty pending total claims; 2) present claims not encompassed by the pre-examination search or an updated accelerated examination support document; or 3) present claims that are directed a non-elected invention or an invention other than that previously claimed and examined in the application, will be treated as not fully responsive and will not be entered.

   For any amendment to the claims (including any new claim) that is not encompassed by the accelerated examination support document, applicant must provide an updated accelerated examination support document that encompasses the amended or new claims at the time of filing of the amendment.

   To proceed expeditiously with the examination, it is recommended that a reply with amendments made to any claim or with any new claim being added be accompanied by an updated accelerated examination support document or a statement explaining how the amended or new claim is supported by the original accelerated examination support document.

6. Information Disclosure Statement (IDS):
Any IDS filed during prosecution must be submitted electronically via EFS or EFS-web, accompanied by an updated accelerated examination support document, and be in compliance with 37 CFR 1.97 and 1.98.

7. Post-Allowance Processing:
   To expedite processing of the allowed application into a patent, the applicant must: 1) pay the required fees within one month of the date of the Notice of Allowance, and 2) not file any post allowance papers not required by the Office. In no event may the issue fee be paid and accepted later than three months from the date of the Notice of Allowance.

8. After-Final and Appeal Procedures:
   To expedite prosecution; after receiving the final Office action, applicant must: 1) promptly file a notice of appeal, an appeal brief and appeal fees; and 2) not request a pre-appeal brief conference.

   Any amendment, affidavit or other evidence filed after final Office action must comply with applicable rules and the requirements outlined in numbered paragraphs 5 and 6 above.

   On appeal, the application will proceed according to normal appeal procedures. After appeal, the application will again be treated special.

9. Proceedings Outside the Normal Examination Process:
   If the application becomes involved in a proceeding that is outside the normal examination process (e.g., a secrecy order, national security review, interference proceeding, petitions under 37 CFR 1.181, 182 or 183), the application will be treated special before and after such proceeding.

10. Final Disposition:
    The twelve month goal of this accelerated examination procedure ends with a final disposition. The mailing of a final Office action, a Notice of Allowance, the filing of a Notice of Appeal, or the filing of a Request for Continued Examination (RCE) is the final disposition.

If, during prosecution, a paper is not filed electronically using EFS-web, a reply is filed but is not fully responsive, the application is involved in an appeal, or a proceeding outside normal examination process, the application will still be examined expeditiously, however, the final disposition may occur more than twelve months from the filing of the application.

Any inquiry regarding this decision should be directed to Quality Assurance Specialist Jose' G. Dees at (571) 272-1569.

Jose' G. Dees, Quality Assurance Specialist
Technology Center 2800
Semiconductors, Electrical and Optical
Systems and Components

UNITED STATES PATENT AND TRADEMARK OFFICE

Commissioner for Patents
United States Patent and Trademark Office
P.O. Box 1450
Alexandria, VA 22313-1450
www.uspto.gov

SHELDON MAK & ANDERSON PC
100 Corson Street
Third Floor
PASADENA CA 91103-3842

MAILED

OCT 08 2010

OFFICE OF PETITIONS

In re Application of	:	
Stanley G. Stratton, et al.	:	
Application No. 12/883,098	:	DECISION ON PETITION
Filed: September 15, 2010	:	TO MAKE SPECIAL UNDER
Attorney Docket No. 17643-2	:	37 CFR 1.102(c)(1)
	:	

This is a decision on the petition under 37 CFR 1.102(c)(1), filed September 16, 2010, to make the above-identified application special based on applicant's age as set forth in M.P.E.P. § 708.02, Section IV.

The petition is **GRANTED**.

A grantable petition to make an application special under 37 CFR 1.102(c)(1) and MPEP § 708.02, Section IV: Applicant's Age must be accompanied by evidence showing that at least one of the applicants is 65 years of age, or more, such as a birth certificate or a statement by applicant. No fee is required

The instant petition includes a statement from the attorney of record certifying that he/she is in possession of evidence, and will retain such in the application file record, showing that the inventor, Pritam S. Dhaliwai is 65 years of age, or more. Accordingly, the above-identified application has been accorded "special" status.

Telephone inquiries concerning this decision should be directed to Terri Johnson at 571-272-2991.

All other inquiries concerning either the examination or status of the application should be directed to the Technology Center.

The application is being forwarded to the Technology Center Art Unit 1793 for action on the merits commensurate with this decision.

/Terri Johnson/
Terri Johnson
Petitions Examiner
Office of Petitions

UNITED STATES PATENT AND TRADEMARK OFFICE

UNITED STATES DEPARTMENT OF COMMERCE
United States Patent and Trademark Office
Address: COMMISSIONER FOR PATENTS
P.O. Box 1450
Alexandria, Virginia 22313-1450
www.uspto.gov

APPLICATION NO.	FILING DATE	FIRST NAMED INVENTOR	ATTORNEY DOCKET NO.	CONFIRMATION NO.
12/883,154	09/15/2010	L. Thomas Mohr	PA5365US	4266

22830 7590 01/31/2011

CARR & FERRELL LLP
120 CONSTITUTION DRIVE
MENLO PARK, CA 94025

EXAMINER	
HAQ, NAEEM U	

ART UNIT	PAPER NUMBER
3625	

MAIL DATE	DELIVERY MODE
01/31/2011	PAPER

Please find below and/or attached an Office communication concerning this application or proceeding.

The time period for reply, if any, is set in the attached communication.

UNITED STATES PATENT AND TRADEMARK OFFICE

Commissioner for Patents
United States Patent and Trademark Office
P.O. Box 1450
Alexandria, VA 22313-1450
www.uspto.gov

JAN 3 1 2011

CARR & FERRELL LLP
120 CONSTITUTION DRIVE
MENLO PARK CA 94025

In re application of: : **DECISION ON PETITION**
MOHR, L. Thomas, et al. : **TO MAKE SPECIAL FOR**
Application No.: 12/883,154 : **NEW APPLICATION**
Filed: September 15, 2010 : **UNDER 37 CFR 1.102**
For: ALTERNATIVE SELECTIONS FOR COMPOUND PRICE QUOTING

This is a decision on the petition filed on September 15, 2010 to make the above-identified application special for accelerated examination procedure under 37 C.F.R. § 1.102(d).

The petition to make the application special is **GRANTED**.

The application is eligible for accelerated examination and the petition complies with the conditions for granting the application special status pursuant to the "Change to Practice for Petitions in Patent Applications to Make Special and for Accelerated Examination" published June 26, 2006, in the Federal Register. (71 Fed. Reg. 36323).

The prosecution of the instant application will be conducted expeditiously according to the following guidelines.

1. The application will be docketed to an examiner and taken up for action within two weeks of the date of this decision.

2. Restriction Practice:
If the examiner determines that the claims are not directed to a single invention, a telephone request to elect one single invention will be made pursuant to MPEP 812.01. As a prerequisite to the grant of this petition, the applicant has agreed to make an oral election, by telephone, without traverse. If the applicant refuses to make an election without traverse, or the examiner cannot reach the applicant after a reasonable effort, the examiner will treat the

first claimed invention (invention defined by claim 1) as having being constructively elected without traverse for examination.

3. Office action:
If it is determined that, after appropriate consultation, there is a potential rejection or any other issue to be addressed, the examiner will telephone the applicant and arrange an interview to discuss and resolve the issue. An Office action, other than a Notice of Allowance and Fee(s) Due (Notice of Allowance), will not be issued unless either: 1) an interview was conducted but did not result in agreed to action that places the application in condition for allowance, or, 2) a determination is made that an interview would be unlikely to result in the application being placed in condition for allowance, and 3) an internal conference has been held to review any rejection of any claim.

4. Time for Reply:
An Office action other than a Notice of Allowance or a final Office action will set a shortened statutory period of one month or thirty days, whichever is longer, for reply with no extension of time available under 37 CFR 1.136(a). Failure to timely file a reply within this non-extendible period for reply will result in the abandonment of the application.

5. Reply by Applicant:
A timely reply to an Office action other than the Notice of Allowance must be submitted electronically via EFS or EFS-web and limited to addressing the rejections, objections and requirement made. Any amendment that attempts to: 1) add claims which would result in more than three pending independent claims or more than twenty pending total claims; 2) present claims not encompassed by the pre-examination search or an updated accelerated examination support document; or 3) present claims that are directed to a non-elected invention or an invention other than that previously claimed and examined in the application, will be treated as not fully responsive and will not be entered.

   For any amendment to the claims (including any new claim) that is not encompassed by the accelerated examination support document, applicant must provide an updated accelerated examination support document that encompasses the amended or new claims at the time of filing of the amendment.

   To proceed expeditiously with the examination, it is recommended that a reply with amendments made to any claim or with any new claim being added be accompanied by an updated accelerated

examination support document or a statement explaining how the amended or new claim is supported by the original accelerated examination support document.

6. Information Disclosure Statement (IDS):
Any IDS filed during prosecution must be submitted electronically via EFS or EFS-web, accompanied by an updated accelerated examination support document, and be in compliance with 37 CFR 1.97 and 1.98.

7. Post-Allowance Processing:
To expedite processing of the allowed application into a patent, the applicant must: 1) pay the required fees within one month of the date of the Notice of Allowance, and 2) not file any post allowance papers not required by the Office. In no event may the issue fee be paid and accepted later than three months from the date of the Notice of Allowance.

8. After-Final and Appeal Procedures:
To expedite prosecution, after receiving the final Office action, applicant must: 1) promptly file a notice of appeal, an appeal brief and appeal fees; and 2) not request a pre-appeal brief conference.

   Any amendment, affidavit or other evidence filed after final Office action must comply with applicable rules and the requirements outlined in numbered paragraphs 5 and 6 above.

   On appeal, the application will proceed according to normal appeal procedures. After appeal, the application will again be treated special.

9. Proceedings Outside the Normal Examination Process:
If the application becomes involved in a proceeding that is outside the normal examination process (e.g., a secrecy order, national security review, interference proceeding, petitions under 37 CFR 1.181, 182 or 183), the application will be treated special before and after such proceeding.

10. Final Disposition:
The twelve month goal of this accelerated examination procedure ends with a final disposition. The mailing of a final Office action, a Notice of Allowance, the filing of a Notice of Appeal, or the filing of a Request for Continued Examination (RCE) is the final disposition.

    If, during prosecution, a paper is not filed electronically using EFS-web, a reply is filed but is not fully responsive, the application is

involved in an appeal, or a proceeding outside normal examination process, the application will still be examined expeditiously, however, the final disposition may occur more than twelve months from the filing of the application.

Any inquiry regarding this decision should be directed to Robert Weinhardt, Business Practice Specialist, at (571) 272-6633.

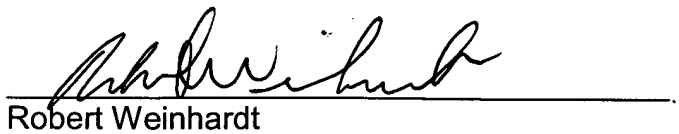

Robert Weinhardt
Business Practice Specialist
Technology Center 3600

RW/1/29/11

UNITED STATES PATENT AND TRADEMARK OFFICE

UNITED STATES DEPARTMENT OF COMMERCE
United States Patent and Trademark Office
Address: COMMISSIONER FOR PATENTS
P.O. Box 1450
Alexandria, Virginia 22313-1450
www.uspto.gov

APPLICATION NO.	FILING DATE	FIRST NAMED INVENTOR	ATTORNEY DOCKET NO.	CONFIRMATION NO.
12/883,155	09/15/2010	L. Thomas Mohr	PA5364US	4276

22830 7590 01/31/2011

CARR & FERRELL LLP
120 CONSTITUTION DRIVE
MENLO PARK, CA 94025

EXAMINER	
LE, NANCY LOAN T	
ART UNIT	PAPER NUMBER
3621	
MAIL DATE	DELIVERY MODE
01/31/2011	PAPER

Please find below and/or attached an Office communication concerning this application or proceeding.

The time period for reply, if any, is set in the attached communication.

UNITED STATES PATENT AND TRADEMARK OFFICE

Commissioner for Patents
United States Patent and Trademark Office
P.O. Box 1450
Alexandria, VA 22313-1450
www.uspto.gov

JAN 3 1 2011

CARR & FERRELL LLP
120 CONSTITUTION DRIVE
MENLO PARK CA 94025

In re application of: : **DECISION ON PETITION**
MOHR, L. Thomas, et al. : **TO MAKE SPECIAL FOR**
Application No.: 12/883,155 : **NEW APPLICATION**
Filed: September 15, 2010 : **UNDER 37 CFR 1.102**
For: AUTOMATED PRICE QUOTE GENERATION

This is a decision on the petition filed on September 15, 2010 to make the above-identified application special for accelerated examination procedure under 37 C.F.R. § 1.102(d).

The petition to make the application special is **GRANTED**.

The application is eligible for accelerated examination and the petition complies with the conditions for granting the application special status pursuant to the "Change to Practice for Petitions in Patent Applications to Make Special and for Accelerated Examination" published June 26, 2006, in the Federal Register. (71 Fed. Reg. 36323).

The prosecution of the instant application will be conducted expeditiously according to the following guidelines.

1. The application will be docketed to an examiner and taken up for action within two weeks of the date of this decision.

2. Restriction Practice:
If the examiner determines that the claims are not directed to a single invention, a telephone request to elect one single invention will be made pursuant to MPEP 812.01. As a prerequisite to the grant of this petition, the applicant has agreed to make an oral election, by telephone, without traverse. If the applicant refuses to make an election without traverse, or the examiner cannot reach the applicant after a reasonable effort, the examiner will treat the

first claimed invention (invention defined by claim 1) as having being constructively elected without traverse for examination.

3. Office action:
If it is determined that, after appropriate consultation, there is a potential rejection or any other issue to be addressed, the examiner will telephone the applicant and arrange an interview to discuss and resolve the issue. An Office action, other than a Notice of Allowance and Fee(s) Due (Notice of Allowance), will not be issued unless either: 1) an interview was conducted but did not result in agreed to action that places the application in condition for allowance, or, 2) a determination is made that an interview would be unlikely to result in the application being placed in condition for allowance, and 3) an internal conference has been held to review any rejection of any claim.

4. Time for Reply:
An Office action other than a Notice of Allowance or a final Office action will set a shortened statutory period of one month or thirty days, whichever is longer, for reply with no extension of time available under 37 CFR 1.136(a). Failure to timely file a reply within this non-extendible period for reply will result in the abandonment of the application.

5. Reply by Applicant:
A timely reply to an Office action other than the Notice of Allowance must be submitted electronically via EFS or EFS-web and limited to addressing the rejections, objections and requirement made. Any amendment that attempts to: 1) add claims which would result in more than three pending independent claims or more than twenty pending total claims; 2) present claims not encompassed by the pre-examination search or an updated accelerated examination support document; or 3) present claims that are directed to a non-elected invention or an invention other than that previously claimed and examined in the application, will be treated as not fully responsive and will not be entered.

For any amendment to the claims (including any new claim) that is not encompassed by the accelerated examination support document, applicant must provide an updated accelerated examination support document that encompasses the amended or new claims at the time of filing of the amendment.

To proceed expeditiously with the examination, it is recommended that a reply with amendments made to any claim or with any new claim being added be accompanied by an updated accelerated

examination support document or a statement explaining how the amended or new claim is supported by the original accelerated examination support document.

6. Information Disclosure Statement (IDS):
   Any IDS filed during prosecution must be submitted electronically via EFS or EFS-web, accompanied by an updated accelerated examination support document, and be in compliance with 37 CFR 1.97 and 1.98.

7. Post-Allowance Processing:
   To expedite processing of the allowed application into a patent, the applicant must: 1) pay the required fees within one month of the date of the Notice of Allowance, and 2) not file any post allowance papers not required by the Office. In no event may the issue fee be paid and accepted later than three months from the date of the Notice of Allowance.

8. After-Final and Appeal Procedures:
   To expedite prosecution, after receiving the final Office action, applicant must: 1) promptly file a notice of appeal, an appeal brief and appeal fees; and 2) not request a pre-appeal brief conference.

   Any amendment, affidavit or other evidence filed after final Office action must comply with applicable rules and the requirements outlined in numbered paragraphs 5 and 6 above.

   On appeal, the application will proceed according to normal appeal procedures. After appeal, the application will again be treated special.

9. Proceedings Outside the Normal Examination Process:
   If the application becomes involved in a proceeding that is outside the normal examination process (e.g., a secrecy order, national security review, interference proceeding, petitions under 37 CFR 1.181, 182 or 183), the application will be treated special before and after such proceeding.

10. Final Disposition:
    The twelve month goal of this accelerated examination procedure ends with a final disposition. The mailing of a final Office action, a Notice of Allowance, the filing of a Notice of Appeal, or the filing of a Request for Continued Examination (RCE) is the final disposition.

    If, during prosecution, a paper is not filed electronically using EFS-web, a reply is filed but is not fully responsive, the application is

involved in an appeal, or a proceeding outside normal examination process, the application will still be examined expeditiously, however, the final disposition may occur more than twelve months from the filing of the application.

Any inquiry regarding this decision should be directed to Robert Weinhardt, Business Practice Specialist, at (571) 272-6633.

Robert Weinhardt
Business Practice Specialist
Technology Center 3600

RW/1/29/11

UNITED STATES PATENT AND TRADEMARK OFFICE

Commissioner for Patents
United States Patent and Trademark Office
P.O. Box 1450
Alexandria, VA 22313-1450
www.uspto.gov

SHELDON MAK & ANDERSON PC
100 CORSON STREET
THIRD FLOOR
PASADENA CA 91103-3842

MAILED

NOV 22 2010

OFFICE OF PETITIONS

In re Application of	:	
Milan Trcka	:	
Application No. 12/883,178	:	DECISION DISMISSING
Filed: September 16, 2010	:	PETITION UNDER 37 CFR 1.10 (d)
Attorney Docket No. 19415-3	:	

This is a decision on the petition filed September 16, 2010, which is properly treated as a petition under 37 CFR 1.10(d) requesting that the above-identified application be considered as filed on September 15, 2010, rather than the presently accorded filing date of September 16, 2010.

The petition is **DISMISSED.**

Any request for reconsideration of this decision should be filed within TWO MONTHS of the date of this decision in order to be considered timely (see 37 CFR 1.181(f). No extensions of time pursuant to the provisions of 37 CFR 1.136 are permitted. If reconsideration is not requested within the time period specified above, the above-identified application will be referred to the Office of Patent Application Processing with the presently accorded filing date of September 16, 2010.

Any person filing correspondence under this section that was received by the Office and delivered by the "Express Mail Post Office to Addressee" service of the USPS, who can show that the "date-in" on the "Express Mail" mailing label or other official notation entered by the USPS was incorrectly entered or omitted by the USPS, may petition the Director to accord the correspondence a filing date as of the date the correspondence is shown to have been deposited with the USPS.

Petitioner contends that "Applicant repeatedly attempted to timely submit the present application through the Patent Office's electronic filing system, but was unable to meet the deadline due to errors on the part of the EFS-Web electronic filing system which caused the application to be received on September, 16, 2010 (EST) rather than on September 15, 2010 (PST)." Further, petitioner contends "Applicant then prepared and mailed the above-identified patent application *via Express Mail* as certified under 37 CFR 1.10 on September 15, 2010 to ensure this application is accorded the correct filing date of September 15, 2010."

Petitioner requests the earlier filing date on the basis that the application was purportedly deposited in Express Mail service on September 15, 2010, pursuant to the requirements of 37 CFR 1.10. The petition is accompanied by: a copy of the Express Mail mailing

label EM 093413815 US; a copy of the Track & Confirm shipment details; a copy of the postcard receipt; and a copy of a Certificate of Mailing by "Express Mail" (37 CFR 1.10).

A grantable petition under 37 CFR 1.10(d) must include:

> (1) The filing of a petition promptly after the person becomes aware that the Office has accorded, or will accord, a filing date based upon an incorrect entry by the USPS;
>
> 2) The placement of the "Express Mail" number on the mailing label of the paper(s) or fee(s) that constitutes the correspondence prior to the original mailing by "Express Mail" ; and
>
> (3) A showing which establishes, to the satisfaction of the Director, that the requested filing date was the date the correspondence was deposited in the "Express Mail Post Office to Addressee" service prior to the last scheduled pickup for that day. Any showing pursuant to this paragraph must be corroborated by evidence from the USPS or that came into being after deposit and within one business day of the deposit of the correspondence in the "Express Mail Post Office to Addressee" service of the USPS.

The petition lacks item (3).

With regards to item (3), the showing under 37 CFR 1.10(d) must be corroborated by (1) evidence from the USPS, or (2) evidence that came into being after deposit and within one business day of the deposit of the correspondence as "Express Mail." Evidence from the USPS may be the "Express Mail" Corporate Account Mailing Statement. Due to the questionable reliability of evidence from a party other than the USPS that did not come into being contemporaneously with the deposit of the correspondence with the USPS, 37 CFR 1.10(d) specifically requires that any petition under 37 CFR 1.10(d) be corroborated either by evidence from the USPS, or by evidence that came into being after deposit and within one business day after the deposit of the correspondence as "Express Mail." Evidence that came into being within one day after the deposit of the correspondence as "Express Mail" may be in the form of a log book which contains information such as the "Express Mail" number; the application number, attorney docket number or other such file identification number; the place, date and time of deposit; the time of the last scheduled pick up for that date and place of deposit; the depositor's initials or signature; and the date and time of entry in the log. Conversely, evidence created prior to the deposit of the correspondence as "Express Mail" with the USPS (e.g., an application transmittal cover letter, or a client letter prepared prior to the deposit of the correspondence); or created more than one business day after the deposit of the correspondence as "Express Mail" (e.g., an affidavit or declaration prepared more than one business day after the correspondence was deposited with the USPS as "Express Mail") cannot be accepted under the terms of the rule.

Petitioner has submitted a copy of the Express Mail mailing label EM 093413815 US with an incorrect USPTO correspondence address and therefore cannot be used as evidence.

Further, the USPS Express Mail Track and Confirm record, submitted by petitioner, shows that the package in question was accepted on September 15, 2010 at the City of Industry, CA USPS at 11:44 p.m., however, due to the incorrect addressee, the USPS returned the item to petitioner on September 20, 2010.

As such, a review of the records and the documents submitted with the instant petition does not support petitioner's request.

Additionally, it is not apparent whether the person signing the instant petition was ever given a power of attorney or authorization of agent to prosecute this patent application. In accordance with 37 CFR 1.34(a), the signature appearing on the petition shall constitute a representation to the United States Patent and Trademark Office that he/she is authorized to represent the particular party in whose behalf he/she acts.

Further correspondence with respect to this matter should be addressed as follows:

By mail: Mail Stop PETITIONS
Commissioner for Patents
Post Office Box 1450
Alexandria, VA 22313-1450

By hand: U.S. Patent and Trademark Office
Customer Service Window, Mail Stop Petitions
Randolph Building
401 Dulany Street
Alexandria, VA 22314

By fax: (571) 273-8300
ATTN: Office of Petitions

Telephone inquires concerning this matter may be directed to Joan Olszewski at (571) 272-7751.

/Liana Walsh/
Liana Walsh
Petitions Examiner
Office of Petitions

UNITED STATES PATENT AND TRADEMARK OFFICE

Commissioner for Patents
United States Patent and Trademark Office
P.O. Box 1450
Alexandria, VA 22313-1450
www.uspto.gov

SLATER & MATSIL, L.L.P.
17950 PRESTON ROAD, SUITE 1000
DALLAS, TX 75252

MAILED

MAY 16 2011

OFFICE OF PETITIONS

In re Application of :
Yong-Tian Hou et al :
Application No. 12/883,241 : DECISION ON PETITION
Filed: September 16, 2010 :
Attorney Docket No. TSM06-0523D1 :

This is a decision on the petition under 37 CFR 1.182, filed, April 21, 2011, to correct the spelling of the fifth named inventor from "K. T. Huang" to – Kuo-Tai Huang --.

The petition is **GRANTED**.

Office records have been corrected to reflect the correct spelling of the above-named inventor. A corrected Filing Receipt, which sets forth the correct spelling of the above-named inventor, accompanies this decision on petition.

Any questions concerning this matter may be directed to Irvin Dingle at (571) 272-3210.

Irvin Dingle
Petition Examiner
Office of Petitions

ATTACHMENT: Corrected Filing Receipt

UNITED STATES PATENT AND TRADEMARK OFFICE

UNITED STATES DEPARTMENT OF COMMERCE
United States Patent and Trademark Office
Address: COMMISSIONER FOR PATENTS
P.O. Box 1450
Alexandria, Virginia 22313-1450
www.uspto.gov

APPLICATION NUMBER	FILING or 371(c) DATE	GRP ART UNIT	FIL FEE REC'D	ATTY.DOCKET.NO	TOT CLAIMS	IND CLAIMS
12/883,241	09/16/2010	2815	1090	TSM06-0523D1	20	3

CONFIRMATION NO. 4469

43859
SLATER & MATSIL, L.L.P.
17950 PRESTON ROAD, SUITE 1000
DALLAS, TX 75252

CORRECTED FILING RECEIPT

OC000000047671929

Date Mailed: 05/16/2011

Receipt is acknowledged of this non-provisional patent application. The application will be taken up for examination in due course. Applicant will be notified as to the results of the examination. Any correspondence concerning the application must include the following identification information: the U.S. APPLICATION NUMBER, FILING DATE, NAME OF APPLICANT, and TITLE OF INVENTION. Fees transmitted by check or draft are subject to collection. Please verify the accuracy of the data presented on this receipt. **If an error is noted on this Filing Receipt, please submit a written request for a Filing Receipt Correction. Please provide a copy of this Filing Receipt with the changes noted thereon. If you received a "Notice to File Missing Parts" for this application, please submit any corrections to this Filing Receipt with your reply to the Notice. When the USPTO processes the reply to the Notice, the USPTO will generate another Filing Receipt incorporating the requested corrections**

Applicant(s)

Yong-Tian Hou, Singapore, SINGAPORE;
Peng-Fu Hsu, Hsin-Chu, TAIWAN;
Jin Ying, Singapore, SINGAPORE;
Kang-Cheng Lin, Yonghe, TAIWAN;
Kuo-Tai Huang, Hsin-Chu, TAIWAN;
Tze-Liang Lee, Hsin-Chu, TAIWAN;

Assignment For Published Patent Application

Taiwan Semiconductor Manufacturing Company, Ltd., Hsin-Chu, TAIWAN

Power of Attorney: The patent practitioners associated with Customer Number 43859

Domestic Priority data as claimed by applicant

This application is a DIV of 11/656,711 01/23/2007 PAT 7,812,414

Foreign Applications (You may be eligible to benefit from the **Patent Prosecution Highway** program at the USPTO. Please see http://www.uspto.gov for more information.)

If Required, Foreign Filing License Granted: 09/23/2010

The country code and number of your priority application, to be used for filing abroad under the Paris Convention, is **US 12/883,241**

Projected Publication Date: Not Applicable

Non-Publication Request: No

Early Publication Request: No

Title

Hybrid Process for Forming Metal Gates

Preliminary Class

257

PROTECTING YOUR INVENTION OUTSIDE THE UNITED STATES

Since the rights granted by a U.S. patent extend only throughout the territory of the United States and have no effect in a foreign country, an inventor who wishes patent protection in another country must apply for a patent in a specific country or in regional patent offices. Applicants may wish to consider the filing of an international application under the Patent Cooperation Treaty (PCT). An international (PCT) application generally has the same effect as a regular national patent application in each PCT-member country. The PCT process **simplifies** the filing of patent applications on the same invention in member countries, but **does not result** in a grant of "an international patent" and does not eliminate the need of applicants to file additional documents and fees in countries where patent protection is desired.

Almost every country has its own patent law, and a person desiring a patent in a particular country must make an application for patent in that country in accordance with its particular laws. Since the laws of many countries differ in various respects from the patent law of the United States, applicants are advised to seek guidance from specific foreign countries to ensure that patent rights are not lost prematurely.

Applicants also are advised that in the case of inventions made in the United States, the Director of the USPTO must issue a license before applicants can apply for a patent in a foreign country. The filing of a U.S. patent application serves as a request for a foreign filing license. The application's filing receipt contains further information and guidance as to the status of applicant's license for foreign filing.

Applicants may wish to consult the USPTO booklet, "General Information Concerning Patents" (specifically, the section entitled "Treaties and Foreign Patents") for more information on timeframes and deadlines for filing foreign patent applications. The guide is available either by contacting the USPTO Contact Center at 800-786-9199, or it can be viewed on the USPTO website at http://www.uspto.gov/web/offices/pac/doc/general/index.html.

For information on preventing theft of your intellectual property (patents, trademarks and copyrights), you may wish to consult the U.S. Government website, http://www.stopfakes.gov. Part of a Department of Commerce initiative, this website includes self-help "toolkits" giving innovators guidance on how to protect intellectual property in specific countries such as China, Korea and Mexico. For questions regarding patent enforcement issues, applicants may call the U.S. Government hotline at 1-866-999-HALT (1-866-999-4158).

LICENSE FOR FOREIGN FILING UNDER

Title 35, United States Code, Section 184

Title 37, Code of Federal Regulations, 5.11 & 5.15

GRANTED

The applicant has been granted a license under 35 U.S.C. 184, if the phrase "IF REQUIRED, FOREIGN FILING LICENSE GRANTED" followed by a date appears on this form. Such licenses are issued in all applications where the conditions for issuance of a license have been met, regardless of whether or not a license may be required as

set forth in 37 CFR 5.15. The scope and limitations of this license are set forth in 37 CFR 5.15(a) unless an earlier license has been issued under 37 CFR 5.15(b). The license is subject to revocation upon written notification. The date indicated is the effective date of the license, unless an earlier license of similar scope has been granted under 37 CFR 5.13 or 5.14.

This license is to be retained by the licensee and may be used at any time on or after the effective date thereof unless it is revoked. This license is automatically transferred to any related applications(s) filed under 37 CFR 1.53(d). This license is not retroactive.

The grant of a license does not in any way lessen the responsibility of a licensee for the security of the subject matter as imposed by any Government contract or the provisions of existing laws relating to espionage and the national security or the export of technical data. Licensees should apprise themselves of current regulations especially with respect to certain countries, of other agencies, particularly the Office of Defense Trade Controls, Department of State (with respect to Arms, Munitions and Implements of War (22 CFR 121-128)); the Bureau of Industry and Security, Department of Commerce (15 CFR parts 730-774); the Office of Foreign AssetsControl, Department of Treasury (31 CFR Parts 500+) and the Department of Energy.

NOT GRANTED

No license under 35 U.S.C. 184 has been granted at this time, if the phrase "IF REQUIRED, FOREIGN FILING LICENSE GRANTED" DOES NOT appear on this form. Applicant may still petition for a license under 37 CFR 5.12, if a license is desired before the expiration of 6 months from the filing date of the application. If 6 months has lapsed from the filing date of this application and the licensee has not received any indication of a secrecy order under 35 U.S.C. 181, the licensee may foreign file the application pursuant to 37 CFR 5.15(b).

UNITED STATES PATENT AND TRADEMARK OFFICE

UNITED STATES DEPARTMENT OF COMMERCE
United States Patent and Trademark Office
Address: COMMISSIONER FOR PATENTS
P.O. Box 1450
Alexandria, Virginia 22313-1450
www.uspto.gov

APPLICATION NO.	FILING DATE	FIRST NAMED INVENTOR	ATTORNEY DOCKET NO.	CONFIRMATION NO.
12/883,294	09/16/2010	Takanori USHIJIMA	P/3541-280	4558

2352 7590 01/26/2011

OSTROLENK FABER GERB & SOFFEN
1180 AVENUE OF THE AMERICAS
NEW YORK, NY 100368403

EXAMINER	
ART UNIT	PAPER NUMBER
3739	

MAIL DATE	DELIVERY MODE
01/26/2011	PAPER

Please find below and/or attached an Office communication concerning this application or proceeding.

The time period for reply, if any, is set in the attached communication.

UNITED STATES PATENT AND TRADEMARK OFFICE

Commissioner for Patents
United States Patent and Trademark Office
P.O. Box 1450
Alexandria, VA 22313-1450
www.uspto.gov

OSTROLENK FABER GERB & SOFFEN
1180 AVENUE OF THE AMERICAS
NEW YORK NY 10036-8403

In re Application of	:	
USHIJIMA, TAKANORI et al	:	DECISION ON REQUEST TO
Application No. 12/883,294	:	PARTICIPATE IN PATENT
Filed: Sep. 16, 2010	:	PCT/PROSECUTION HIGHWAY
Attorney Docket No. P/3541/280	:	PROGRAM AND PETITION
For: ENDOSCOPIC FLUID CONTROL APPARATUS	:	37 CFR 1.102(a)

This is a decision on the renewed request to participate in the Patent Prosecution Highway (PPH) program and the petition under 37 CFR 1.102(a), filed January 25, 2011, to make the above-identified application special.

The request and petition are dismissed.

A grantable request to participate in the PPH pilot program and petition to make special require:

(1) The U.S. application must validly claim priority under 35 U.S.C. 119(a) to one or more applications filed in the JPO;
(2) Applicant must submit a copy of the allowable/patentable claim(s) from the JPO/PCT application(s) along with an English translation thereof and a statement that the English translation is accurate;
(3) All the claims in the U.S. application must sufficiently correspond or be amended to sufficiently correspond to the allowable/patentable claim(s) in the JPO application(s);
(4) Examination of the U.S. application has not begun;
(5) Applicant must submit a copy of all the office actions from each of the JPO/PCT application(s) containing the allowable/patentable claim(s) along with an English translation thereof and a statement that the English translation is accurate; and
(6) Applicant must submit an IDS listing the documents cited by the JPO examiner in the JPO office action along with copies of documents except U.S. patents or U.S. patent application publications.

The request to participate in the PPH program and petition met all conditions except Item #3

The request to participate in the PPH pilot program and petition fail to file a claim amendment (not proposed amendment) to show US pending claims correspond with the JPO allowed claims 1-5. Currently, this application contains only claims 1-5 as filed on Dec. 1, 2010. It is not clear what the applicant's intention is regarding that proposed added claim 6. The proposed claim 6 was not examined by the JPO examiner.

Applicant is encouraged to cite and submit all relevant prior art references, if any, to facilitate examination in this application.

Applicant is given a time period of **ONE MONTH or THIRTY DAYS**, whichever is longer, from the mailing date of this decision to correct the deficiencies. **NO EXTENSION OF TIME UNDER 37 CFR 1.136 IS PERMITTED.** If the deficiencies are not corrected with the time period given, the application will await action in its regular turn.

Response must be filed via EFS-Web. Telephone inquiries concerning this decision should be directed to Henry C. Yuen, at 571-272-4856.

/Henry C. Yuen/

Henry C. Yuen
Special Programs Examiner
Technology Center 3700
Tel: 571-272-4856

UNITED STATES PATENT AND TRADEMARK OFFICE

UNITED STATES DEPARTMENT OF COMMERCE
United States Patent and Trademark Office
Address: COMMISSIONER FOR PATENTS
P.O. Box 1450
Alexandria, Virginia 22313-1450
www.uspto.gov

APPLICATION NO.	FILING DATE	FIRST NAMED INVENTOR	ATTORNEY DOCKET NO.	CONFIRMATION NO.
12/883,294	09/16/2010	Takanori USHIJIMA	P/3541-280	4558

2352 7590 02/22/2011
OSTROLENK FABER GERB & SOFFEN
1180 AVENUE OF THE AMERICAS
NEW YORK, NY 100368403

EXAMINER	
ART UNIT	PAPER NUMBER
3739	

MAIL DATE	DELIVERY MODE
02/22/2011	PAPER

Please find below and/or attached an Office communication concerning this application or proceeding.

The time period for reply, if any, is set in the attached communication.

UNITED STATES PATENT AND TRADEMARK OFFICE

Commissioner for Patents
United States Patent and Trademark Office
P.O. Box 1450
Alexandria, VA 22313-1450
www.uspto.gov

OSTROLENK FABER GERB & SOFFEN
1180 AVENUE OF THE AMERICAS
NEW YORK NY 10036-8403

In re Application of	:	
USHIJIMA, TAKANORI et al	:	DECISION ON REQUEST TO
Application No. 12/883,294	:	PARTICIPATE IN PATENT
Filed: Sep. 16, 2010	:	PCT/PROSECUTION HIGHWAY
Attorney Docket No. P/3541/280	:	PROGRAM AND PETITION
For: ENDOSCOPIC FLUID CONTROL APPARATUS	:	37 CFR 1.102(a)

This is a decision on the renewed request to participate in the Patent Prosecution Highway (PPH) program and the petition under 37 CFR 1.102(a), filed Feb. 17, 2011 to make the above-identified application special.

The request and petition are dismissed.

A grantable request to participate in the PPH pilot program and petition to make special require:

(1) The U.S. application must validly claim priority under 35 U.S.C. 119(a) to one or more applications filed in the JPO;
(2) Applicant must submit a copy of the allowable/patentable claim(s) from the JPO/PCT application(s) along with an English translation thereof and a statement that the English translation is accurate;
(3) All the claims in the U.S. application must sufficiently correspond or be amended to sufficiently correspond to the allowable/patentable claim(s) in the JPO application(s);
(4) Examination of the U.S. application has not begun;
(5) Applicant must submit a copy of all the office actions from each of the JPO/PCT application(s) containing the allowable/patentable claim(s) along with an English translation thereof and a statement that the English translation is accurate; and
(6) Applicant must submit an IDS listing the documents cited by the JPO examiner in the JPO office action along with copies of documents except U.S. patents or U.S. patent application publications.

The request to participate in the PPH program and petition met all conditions except Item #3

The request to participate in the PPH pilot program and petition does not show JPO allowed claims 1-5 correspond with the current pending claims 1-6. Currently, this application contains claims 1-6 as filed on Feb. 17, 2011. The newly added independent claim 6 was not examined by the JPO examiner. In order to grant the PPH Request in this case, it is suggested that the applicant cancel the newly added independent claim 6.

To clear the record, during a telephone conversation prior to the filing of the preliminary amendment of Feb. 17, 2011, the undersigned indicated that the "proposed" amendment filed with the PPH Request on Jan. 25, 2011 was not acceptable and creates confusion. In view of the formal preliminary amendment adding claim 6 filed on Feb. 17, 2011, a comparison of the claim chart filed on Jan. 25, 2011 does not show the newly added claim 6 contains the same scope as the allowed independent claim 1 by JPO examiner. It must be noted that the independent claim 6 with means plus function language in US patent practice under 35 USC 6th Paragraph involves all equivalent structures as disclosed in the supporting specification. Therefore, it can not be said the newly added independent claim 6 contains a similar scope with the JPO allowed independent claim 1. Any miscommunication during the telephone conversation is regretted.

Applicant is encouraged to cite and submit all relevant prior art references, if any, to facilitate examination in this application.

Applicant is given a time period of **ONE MONTH or THIRTY DAYS**, whichever is longer, from the mailing date of this decision to correct the deficiencies. **NO EXTENSION OF TIME UNDER 37 CFR 1.136 IS PERMITTED.** If the deficiencies are not corrected with the time period given, the application will await action on the merits for claims filed on Feb. 17, 2011 in its regular turn.

Response must be filed via EFS-Web. Telephone inquiries concerning this decision should be directed to Henry C. Yuen, at 571-272-4856.

/Henry C. Yuen/

Henry C. Yuen
Special Programs Examiner
Technology Center 3700
Tel: 571-272-4856

UNITED STATES PATENT AND TRADEMARK OFFICE

Commissioner for Patents
United States Patent and Trademark Office
P.O. Box 1450
Alexandria, VA 22313-1450
www.uspto.gov

Apple Inc.
c/o Novak Druce + Quigg LLP
1000 Louisiana Street
Fifty-Third Floor
Houston TX 77002

MAILED
MAR 01 2012
OFFICE OF PETITIONS

In re Application of :
Boyd :
Application No. 12/883,301 : DECISION ON PETITION
Filed: September 16, 2010 : PURSUANT TO
Attorney Docket No. JEB00-0106 : 37 C.F.R. § 1.137(B)
Title: LOCATION-BASED NETWORKING METHODS AND SYSTEMS FOR PERFORMING THE SAME :

This is a decision on the petition pursuant to 37 C.F.R. § 1.137(b), filed January 4, 2012, to revive the above-identified application.

This petition pursuant to 37 C.F.R. § 1.137(b) is **GRANTED**.

The above-identified application became abandoned for failure to reply in a timely manner to a non-final Office action, mailed June 9, 2011, which set a shortened statutory period for reply of three months. No response was received, and no extensions of time under the provisions of 37 C.F.R. § 1.136(a) were requested. Accordingly, the above-identified application became abandoned on September 10, 2011. A notice of abandonment was mailed on January 10, 2012.

A grantable petition pursuant to 37 C.F.R. § 1.137(b) must be accompanied by:

(1) The reply required to the outstanding Office action or notice, unless previously filed;
(2) The petition fee as set forth in 37 C.F.R. § 1.17(m);
(3) A statement that the entire delay in filing the required reply from the due date for the reply

until the filing of a grantable petition pursuant to this paragraph was unintentional. The Commissioner may require additional information where there is a question whether the delay was unintentional, and;

(4) Any terminal disclaimer (and fee as set forth in 37 C.F.R. § 1.20(d)) required pursuant to paragraph (d) of this section.

With this petition, Petitioner has submitted an amendment and remarks, the petition fee, a terminal disclaimer and the associated fee, and the proper statement of unintentional delay. As such, the first three requirements of Rule 1.137(b) have been met. The fourth requirement of Rule 1.137(b) is not applicable.

The Technology Center will be notified of this decision, and jurisdiction over this application is transferred to the Technology Center, so that the application may receive further processing. The Technology Center's support staff will notify the Examiner of this decision, so that the amendment, the remarks, and the terminal disclaimer that were each received on January 4, 2012 can be processed in due course.

Petitioner may find it beneficial to view Private PAIR within a fortnight of the present decision to ensure that the revival has been acknowledged by the Technology Center in response to this decision. It is noted that all inquiries with regard to any failure of that change in status should be directed to the Technology Center where that change of status must be effected - **the Office of Petitions cannot effectuate a change of status.**

Telephone inquiries regarding *this decision* should be directed to the undersigned at (571) 272-3225.[1] All other inquiries concerning this application should be directed to the Technology Center.

Paul Shanoski
Senior Attorney
Office of Petitions

1 Petitioner will note that all practice before the Office should be in writing, and the action of the Office will be based exclusively on the written record in the Office. See 37 C.F.R. § 1.2. As such, Petitioner is reminded that no telephone discussion may be controlling or considered authority for Petitioner's further action(s).

UNITED STATES PATENT AND TRADEMARK OFFICE

Commissioner for Patents
United States Patent and Trademark Office
P.O. Box 1450
Alexandria, VA 22313-1450
www.uspto.gov

MAILED
JUL 22 2011
OFFICE OF PETITIONS

LAW OFFICE OF BRIAN SHORT
P.O. BOX 641867
SAN JOSE, CA 95164-1867

In re Application of :
Jeetendra Jangle, et al. :
Application No. 12/883,304 : ON PETITION
Filed: September 16, 2010 :
Attorney Docket No.: LAB-1006U :

This is a decision on the petition under 37 CFR 1.137(b), filed June 22, 2011, to revive the above-identified application.

The petition is **GRANTED**.

The application became abandoned for failure to reply in a timely manner to the Notice to File Missing Parts of Nonprovisional Application mailed September 29, 2010. A Notice of Abandonment was mailed on June 9, 2011. On June 22, 2011, the present petition was filed.

The petition complies with the requirements of 37 CFR 1.137(b) in that petitioner has supplied (1) the reply in the form of the additional claim fees, (2) the petition fee of $810; and (3) an adequate statement of unintentional delay.

The application is being referred to the Office of Patent Application Processing (OPAP) for further processing.

Telephone inquires related to this decision should be directed to the undersigned at (571) 272-3204. Telephone inquiries related to processing at OPAP should be directed to their hotline at (571 272-4000.

/SDB/

Sherry D. Brinkley
Petitions Examiner
Office of Petitions

UNITED STATES PATENT AND TRADEMARK OFFICE

UNITED STATES DEPARTMENT OF COMMERCE
United States Patent and Trademark Office
Address: COMMISSIONER FOR PATENTS
P.O. Box 1450
Alexandria, Virginia 22313-1450
www.uspto.gov

APPLICATION NO.	FILING DATE	FIRST NAMED INVENTOR	ATTORNEY DOCKET NO.	CONFIRMATION NO.
12/883,307	09/16/2010	Takanori USHIJIMA	P/3541-281	4589

2352 7590 01/26/2011

OSTROLENK FABER GERB & SOFFEN
1180 AVENUE OF THE AMERICAS
NEW YORK, NY 100368403

EXAMINER	
ART UNIT	PAPER NUMBER
3739	

MAIL DATE	DELIVERY MODE
01/26/2011	PAPER

Please find below and/or attached an Office communication concerning this application or proceeding.

The time period for reply, if any, is set in the attached communication.

UNITED STATES PATENT AND TRADEMARK OFFICE

Commissioner for Patents
United States Patent and Trademark Office
P.O. Box 1450
Alexandria, VA 22313-1450
www.uspto.gov

OSTROLENK FABER GERB & SOFFEN
1180 AVENUE OF THE AMERICAS
NEW YORK NY 10036-8403

In re Application of	:	
USHIJIMA, TAKANORI	:	DECISION ON REQUEST TO
Application No. 12/883,307	:	PARTICIPATE IN PATENT
Filed: Sep. 16, 2010	:	PCT/PROSECUTION HIGHWAY
Attorney Docket No. P/3541-281	:	PROGRAM AND PETITION
For: ENDOSCOPIC FLUID CONTROL APPARATUS	:	37 CFR 1.102(a)

This is a decision on the request to participate in the Patent Prosecution Highway (PPH) program and the petition under 37 CFR 1.102(a), filed January 25, 2011, to make the above-identified application special.

The request and petition are dismissed.

A grantable request to participate in the PPH pilot program and petition to make special require:

(1) The U.S. application must validly claim priority under 35 U.S.C. 119(a) to one or more applications filed in the JPO;
(2) Applicant must submit a copy of the allowable/patentable claim(s) from the JPO/PCT application(s) along with an English translation thereof and a statement that the English translation is accurate;
(3) All the claims in the U.S. application must sufficiently correspond or be amended to sufficiently correspond to the allowable/patentable claim(s) in the JPO application(s);
(4) Examination of the U.S. application has not begun;
(5) Applicant must submit a copy of all the office actions from each of the JPO/PCT application(s) containing the allowable/patentable claim(s) along with an English translation thereof and a statement that the English translation is accurate; and
(6) Applicant must submit an IDS listing the documents cited by the JPO examiner in the JPO office action along with copies of documents except U.S. patents or U.S. patent application publications.

The request to participate in the PPH program and petition met all conditions except Item #3

The request to participate in the PPH pilot program and petition fail to file a claim amendment (not proposed amendment) to show US pending claims correspond with the JPO allowed claims 1-5. Currently, this application contains only claims 1-4 as filed on Dec. 1, 2010.

Applicant is encouraged to cite and submit all relevant prior art references, if any, to facilitate examination in this application.

Applicant is given a time period of **ONE MONTH or THIRTY DAYS**, whichever is longer, from the mailing date of this decision to correct the deficiencies. **NO EXTENSION OF TIME UNDER 37 CFR 1.136 IS PERMITTED.** If the deficiencies are not corrected with the time period given, the application will await action in its regular turn.

Response must be filed via EFS-Web. Telephone inquiries concerning this decision should be directed to Henry C. Yuen, at 571-272-4856.

/Henry C. Yuen/

Henry C. Yuen
Special Programs Examiner
Technology Center 3700
Tel: 571-272-4856

UNITED STATES PATENT AND TRADEMARK OFFICE

UNITED STATES DEPARTMENT OF COMMERCE
United States Patent and Trademark Office
Address: COMMISSIONER FOR PATENTS
P.O. Box 1450
Alexandria, Virginia 22313-1450
www.uspto.gov

APPLICATION NO.	FILING DATE	FIRST NAMED INVENTOR	ATTORNEY DOCKET NO.	CONFIRMATION NO.
12/883,307	09/16/2010	Takanori USHIJIMA	P/3541-281	4589

2352 7590 02/22/2011

OSTROLENK FABER GERB & SOFFEN
1180 AVENUE OF THE AMERICAS
NEW YORK, NY 100368403

EXAMINER	
ART UNIT	PAPER NUMBER
3739	

MAIL DATE	DELIVERY MODE
02/22/2011	PAPER

Please find below and/or attached an Office communication concerning this application or proceeding.

The time period for reply, if any, is set in the attached communication.

UNITED STATES PATENT AND TRADEMARK OFFICE

Commissioner for Patents
United States Patent and Trademark Office
P.O. Box 1450
Alexandria, VA 22313-1450
www.uspto.gov

OSTROLENK FABER GERB & SOFFEN
1180 AVENUE OF THE AMERICAS
NEW YORK NY 10036-8403

In re Application of	:	
USHIJIMA, TAKANORI	:	DECISION ON REQUEST TO
Application No. 12/883,307	:	PARTICIPATE IN PATENT
Filed: Sep. 16, 2010	:	PCT/PROSECUTION HIGHWAY
Attorney Docket No. P/3541-281	:	PROGRAM AND PETITION
For: ENDOSCOPIC FLUID CONTROL APPARATUS	:	37 CFR 1.102(a)

This is a decision on the request to participate in the Patent Prosecution Highway (PPH) program and the petition under 37 CFR 1.102(a), filed January 25, 2011, to make the above-identified application special.

The request and petition are dismissed.

A grantable request to participate in the PPH pilot program and petition to make special require:

(1) The U.S. application must validly claim priority under 35 U.S.C. 119(a) to one or more applications filed in the JPO;
(2) Applicant must submit a copy of the allowable/patentable claim(s) from the JPO/PCT application(s) along with an English translation thereof and a statement that the English translation is accurate;
(3) All the claims in the U.S. application must sufficiently correspond or be amended to sufficiently correspond to the allowable/patentable claim(s) in the JPO application(s);
(4) Examination of the U.S. application has not begun;
(5) Applicant must submit a copy of all the office actions from each of the JPO/PCT application(s) containing the allowable/patentable claim(s) along with an English translation thereof and a statement that the English translation is accurate; and
(6) Applicant must submit an IDS listing the documents cited by the JPO examiner in the JPO office action along with copies of documents except U.S. patents or U.S. patent application publications.

The request to participate in the PPH program and petition met all conditions except Item #3

The request to participate in the PPH pilot program and petition does not show JPO allowed claims 1-4 correspond with the current pending claims 1-5. Currently, this application contains claims 1-5 as filed on Feb. 17, 2011. The newly added independent claim 5 was not examined by the JPO examiner. In order to grant the PPH Request in this case, it is suggested that the applicant cancel the newly added independent claim 5.

To clear the record, during a telephone conversation prior to the filing of the preliminary amendment of Feb. 17, 2011, the undersigned indicated that the "proposed" amendment filed with the PPH Request on Jan. 25, 2011 was not acceptable and causes confusion. In view of the formal preliminary amendment adding claim 5 filed on Feb. 17, 2011, a comparison of the claim chart filed on Jan. 25, 2011 does not show the newly added claim 5 contains the same scope as the allowed independent claim 1 by JPO examiner. It must be noted that the independent claim 5 with means plus function language in US patent practice under 35 USC 6th Paragraph involves all equivalent structures as disclosed in the supporting specification. Therefore, it can not be said the newly added independent claim 5 contains a similar scope with the JPO allowed independent claim 1. Any miscommunication during the telephone conversation is regretted.

Applicant is encouraged to cite and submit all relevant prior art references, if any, to facilitate examination in this application.

Applicant is given a time period of **ONE MONTH or THIRTY DAYS**, whichever is longer, from the mailing date of this decision to correct the deficiencies. **NO EXTENSION OF TIME UNDER 37 CFR 1.136 IS PERMITTED.** If the deficiencies are not corrected with the time period given, the application will await action on the merits for claims filed on Feb. 17, 2011 in its regular turn.

Response must be filed via EFS-Web. Telephone inquiries concerning this decision should be directed to Henry C. Yuen, at 571-272-4856.

/Henry C. Yuen/

Henry C. Yuen
Special Programs Examiner
Technology Center 3700
Tel: 571-272-4856

UNITED STATES PATENT AND TRADEMARK OFFICE

Commissioner for Patents
United States Patent and Trademark Office
P.O. Box 1450
Alexandria, VA 22313-1450
www.uspto.gov

DOBRUSIN & THENNISCH PC
29 W LAWRENCE ST
SUITE 210
PONTIAC MI 48342

MAILED
NOV 22 2011
OFFICE OF PETITIONS

In re Application of :
Stecker :
Application No. 12/883,340 : NOTICE
Filed: September 16, 2010 :
Attorney Docket No. 1470-001 :

This is a notice regarding your request for acceptance of a fee deficiency submission under 37 CFR 1.28 filed April 12, 2011.

The Office no longer investigates or rejects original or reissue applications under 37 CFR 1.56. **1098 Off. Gaz. Pat. Office 502 (January 3, 1989)**. Therefore, nothing in this Notice is intended to imply that an investigation was done.

Your fee deficiency submission under 37 CFR 1.28 is hereby **ACCEPTED**.

This application is no longer entitled to small entity status. Accordingly, all future fees paid in this application must be paid at the large entity rate.

This application is being forwarded to art unit 1717 for processing in the normal course of business.

Inquiries related to this communication should be directed to the undersigned at (571) 272-3215.

Charlema Grant
Attorney Advisor
Office of Petitions

UNITED STATES PATENT AND TRADEMARK OFFICE

Commissioner for Patents
United States Patent and Trademark Office
P.O. Box 1450
Alexandria, VA 22313-1450
www.uspto.gov

MAILED

MAR 29 2011

OFFICE OF PETITIONS

OLIFF & BERRIDGE, PLC
P.O. BOX 320850
ALEXANDRIA VA 22320-4850

In re Application of :
Ross : DECISION REFUSING STATUS
Application No. 12/883,367 : UNDER 37 CFR 1.47(b)
Filed: September 16, 2010 :
Attorney Docket No. 147002 :

This is in response to the petition under 37 CFR 1.47(b) filed February 17, 2011.

The petition is **DISMISSED**.

Rule 47 applicant is given TWO (2) MONTHS from the mailing date of this decision to reply, correcting the below-noted deficiencies. Any reply should be entitled "Request for Reconsideration of Petition Under 37 CFR 1.47(b)," and should only address the deficiencies noted below, except that the reply may include an oath or declaration executed by the non-signing inventor. **FAILURE TO RESPOND WILL RESULT IN ABANDONMENT OF THE APPLICATION.** Any extensions of time will be governed by 37 CFR 1.136(a).

A grantable petition under 37 CFR 1.47(b) requires:

(1) proof that the non-signing inventor cannot be reached after diligent effort or refuses to sign the oath or declaration after having been presented with the application papers (specification, claims and drawings);
(2) an acceptable oath or declaration in compliance with 35 U.S.C. §§ 115 and 116;
(3) the petition fee;
(4) a statement of the last known address of the non-signing inventor.
(5) proof of proprietary interest: and
(6) proof of irreparable damage.

Applicant lacks item(s) (1) set forth above.

As to item (1), the applicable statute (35 U.S.C.§ 116) requires that a "diligent effort" have been expended in attempting to find or reach the non-signing inventor. *See* MPEP 409.03(a). The showing currently fails to demonstrate, **with a documented showing**, that a diligent effort was made to find or locate non-signing inventor Ross, such that the declaration can be accepted under 37 CFR 1.47(b). Where inability to find or locate a named inventor(s) is alleged, a statement of facts should be submitted that fully describes the exact facts which are relied on to establish that a *diligent effort* was made to locate the inventor. Petitioner has indicated that the application papers were mailed to the last known address but they were returned because non-signing

inventor no longer resides at the last known address. Petitioner has failed to provide a copy of the envelope. Further, petitioner also indicates a Google search was conducted, however the results of the search have not been provided. As such on renewed petition, rule 47 applicant should provide the evidence that supports the efforts described in the Declaration of Nicholas John Roberts.

Further correspondence with respect to this matter should be addressed as follows:

By mail:
Mail Stop PETITIONS
Commissioner for Patents
Post Office Box 1450
Alexandria, VA 22313-1450

By hand:
Customer Service Window
Mail Stop Petitions
Randolph Building
401 Dulany Street
Alexandria, VA 22314

By fax:
(571) 273-8300
ATTN: Office of Petitions

Telephone inquiries should be directed to the undersigned at (571) 272-3215.

Charlema Grant
Petitions Attorney
Office of Petitions

UNITED STATES PATENT AND TRADEMARK OFFICE

Commissioner for Patents
United States Patent and Trademark Office
P.O. Box 1450
Alexandria, VA 22313-1450
www.uspto.gov

MAILED

JUN 13 2011

OFFICE OF PETITIONS

OLIFF & BERRIDGE, PLC
P.O. BOX 320850
ALEXANDRIA VA 22320-4850

In re Application of
Ross Collins
Application No. 12/883,367
Filed: September 16, 2010
Attorney Dkt No. 147002
Title: METHOD OF SECURING A LINER PANEL TO A CASING

DECISION GRANTING STATUS UNDER 37 CFR 1.47(b)

This is in response to the renewed petition under 37 CFR 1.47(b), filed May 27, 2011.

The petition is **GRANTED.**

Petitioner has shown that the non-signing inventor Collins cannot be located to execute the application papers of the above-identified application.

The application and papers have been reviewed and found in compliance with 37 CFR 1.47(b). This application is hereby accorded Rule 1.47(b) status.

As provided in 37 CFR 1.47(c), this Office will forward notice of this application's filing to the non-signing inventor at the address given in the petition. Notice of the filing of this application will also be published in the Official Gazette.

This application is being referred to the Office of Patent Application Processing for pre-examination processing.

Telephone inquiries regarding this decision should be directed to the undersigned at (571) 272-3215.

Charlema Grant
Petitions Attorney
Office of Petitions

UNITED STATES PATENT AND TRADEMARK OFFICE

Commissioner for Patents
United States Patent and Trademark Office
P.O. Box 1450
Alexandria, VA 22313-1450
www.uspto.gov

Ross Collins
3 Pinehill Drive
Rowville Victoria 3178
Australia

MAILED

JUN 13 2011

OFFICE OF PETITIONS

In re Application of
Ross Collins
Application No. 12/883,367
Filed: September 16, 2010
Attorney Dkt No. 147002
Title: METHOD OF SECURING A LINER PANEL TO A CASING

Dear Sir:

You are named as a joint inventor in the above-identified United States patent application, filed under the provisions of 35 U.S.C. 116 (United States Code), and 37 CFR 1.47(b), Rules of Practice in Patent Cases. Should a patent be granted on the application you will be designated therein as a co-inventor.

As a named inventor you are entitled to inspect any paper in the file wrapper of the application, order copies of all or any part thereof (at a prepaid cost per 37 CFR 1.19) or make your position of record in the application. Alternatively, you may arrange to do any of the preceding through a registered patent attorney or agent presenting written authorization from you. If you care to join the application, counsel of record (see below) would presumably assist you. Joining the application would entail the filing of an appropriate oath or declaration by you pursuant to 37 CFR 1.63.

Telephone inquiries regarding this communication should be directed to the undersigned at (571) 272-3215. Requests for information regarding your application should be directed to the File Information Unit at (703) 308-2733. Information regarding how to pay for and order a copy of the application, or a specific paper in the application, should be directed to the Certification Division at (571) 272-3150 or 1 (800) 972-6382 (outside the Washington, DC area).

Charlema Grant
Petitions Attorney
Office of Petitions

cc: OLIFF & BERRIDGE, PLC
P.O. BOX 320850
ALEXANDRIA VA 22320-4850

UNITED STATES PATENT AND TRADEMARK OFFICE

Commissioner for Patents
United States Patent and Trademark Office
P.O. Box 1450
Alexandria, VA 22313-1450
www.uspto.gov

Paper No.

RENNER OTTO
BOISSELLE & SKLAR, LLP
1621 EUCLID AVENUE
NINETEENTH FLOOR
CLEVELAND OH 44115

MAILED

JAN 14 2011

OFFICE OF PETITIONS

In re Application of :
David Roth :
Application No. 12/883,486 :
Filed: September 16, 2010 :
Atty Docket No. ALTKP0109USB :

DECISION ACCORDING STATUS
UNDER 37 CFR 1.47(b)

This is a decision on the PETITION UNDER 37 C.F.R. § 1.47 filed October 1, 2010.

The petition under 37 CFR § 1.47(b) is **GRANTED**.

The above-identified application was filed on September 16, 2010, with an application data sheet identifying the sole inventor but without an executed oath or declaration. Accordingly, on September 28, 2010, the Office mailed a NOTICE TO FILE MISSING PARTS OF NONPROVISIONAL APPLICATION, requiring an executed oath or declaration and the surcharge for its late filing. This Notice set a two-month time limit for reply with extensions of time obtainable under § 1.136(a).

In response, rule 47(b) applicant timely filed the instant petition. The petition was filed by Altek LLC and includes a 3.73(b) statement signed by attorney M. David Galin (See page 1, paragraph 1 of petition) with a Memorandum of Law to show proprietary interest and in support thereof, a declaration by Richard Chandler, current President of Altek LLC attesting that named inventor Roth invented the subject matter of this application while he was employed as President of Altek LLC. The Memorandum also includes a copy of the employee handbook and an unexecuted employment agreement. It is noted that no employment agreement executed by inventor Roth is provided.

Nonetheless, the Memorandum of Law prepared by attorney Nicholas Gingo, supports a conclusion that a court of competent jurisdiction would award Altek ownership of the patent application. In view thereof, Altek LLC may file the instant petition.

§1.47(b) provides that:

> Whenever all of the inventors refuse to execute an application for patent, or cannot be found or reached after diligent effort, a person to whom an inventor has assigned or agreed in writing to assign the invention, or who otherwise shows sufficient proprietary interest in the matter justifying such action, may make application for patent on behalf of and as agent for all the inventors. The oath or declaration in such an application must be accompanied by a petition including proof of the pertinent facts, a showing that such action is necessary to preserve the rights of the parties or to prevent irreparable damage, the fee set forth in §1.17(h), and the last known address of all of the inventors. An inventor may subsequently join in the application by filing an oath or declaration complying with §1.63.

Accordingly, a grantable petition under 37 CFR §1.47(b) requires: (1) an acceptable oath or declaration in compliance with 37 C.F.R. §1.63 and 1.64 or 1.175; (2) the rule 47 applicant must state his or her relationship to the inventor as required by 37 C.F.R. §1.64; (3) proof that the non-signing inventor cannot be found or reached after diligent effort, or refuses to sign the oath or declaration after having been presented with the application papers (specification, claims and drawings); (4) the petition fee; (5) a statement of the last known address of the non-signing inventor; (6) that rule 47 applicant make out a prima facie case (i) that the invention has been assigned to him or her or (ii) that the inventor has agreed in writing to assign the invention to him or her or (iii) otherwise demonstrate a proprietary interest in the subject matter of the invention; and (7) rule 47 applicant must prove that the filing of the application is necessary (i) to preserve the rights of the parties or (ii) to prevent irreparable damage.

The petition and declaration have been reviewed and found to satisfy all requirements above. The declaration is signed by M. David Galin, as authorized representative of the assignee

company, and is in compliance with the requirements set forth in (1) and (2) above. By declaration of facts of attorney Galin, and supporting documentary evidence, petitioner has shown that inventor Roth has expressly refused to join in the application after having been presented with the application papers. The express refusal is set forth in a redacted email. This favorable decision is rendered with respect to the showing of refusal on the basis that the redacted portion of the email communication does not include any statement contravening the conclusion that the inventor has refused to join in the application within the meaning of 37 CFR 1.47. Receipt of the petition fee is acknowledged. The petition includes a statement of the last known address of the non-signing inventor. Rule 47 applicant has made a prima facie case of proprietary interest via the memorandum of law and the affidavit of the president of the assignee company. Finally, rule 47(b) applicant states that the petition is necessary to preserve the rights of Altek and to prevent irreparable.

This application is hereby accorded Rule 1.47(b) status.

As provided in new Rule 1.47(c), this Office will forward notice of this application's filing to the non-signing inventor at the address given in the petition. Notice of the filing of this application will also be published in the Official Gazette.

Telephone inquiries related to this decision may be directed to the undersigned at (571) 272-3219.

Nancy Johnson
Senior Petitions Attorney
Office of Petitions

UNITED STATES PATENT AND TRADEMARK OFFICE

Commissioner for Patents
United States Patent and Trademark Office
P.O. Box 1450
Alexandria, VA 22313-1450
www.uspto.gov

MR. DAVID ROTH
108 Cypress Court
Downingtown PA 19335

MAILED

JAN 14 2011

OFFICE OF PETITIONS

In re Application of :
David Roth : LETTER
Application No. 12/883,486 :
Filed: September 16, 2010 :
Atty Docket No. ALTKP0109USB :

Dear Mr. Roth:

You are named as sole inventor in the above-identified United States patent application filed under the provisions of 35 U.S.C. 118 (United States Code) and 37 CFR 1.47(b), Rules of Practice in Patent Cases. Should a patent be granted on the application you will be designated therein as the sole inventor.

As a named inventor you are entitled to inspect any paper in the file wrapper of the application, order copies of all or any part thereof (at a prepaid cost per 37 CFR 1.19) or make your position of record in the application. Alternatively, you may arrange to do any of the preceding through a registered patent attorney or agent presenting written authorization from you. If you care to join the application, counsel of record (see below) would presumably assist you. Joining in the application would entail the filing of an appropriate oath or declaration by you pursuant to 37 CFR 1.63.

Telephone inquiries regarding this communication should be directed to Petitions Attorney Nancy Johnson at (571) 272-3219. Requests for information regarding your application should be directed to the File Information Unit at (703) 308-2733.

Information regarding how to pay for and order a copy of the application, or a specific paper in the application, should be directed to the Certification Division at (571) 272-3150 or 1-800-972-6382 (outside the Washington D.C. area).

Nancy Johnson
Senior Petitions Attorney
Office of Petitions

RENNER OTTO
BOISSELLE & SKLAR, LLP
1621 EUCLID AVENUE
NINETEENTH FLOOR
CLEVELAND OH 44115

UNITED STATES PATENT AND TRADEMARK OFFICE

Commissioner for Patents
United States Patent and Trademark Office
P.O. Box 1450
Alexandria, VA 22313-1450
www.uspto.gov

In re Application of
Bernard Lasko

Application No. 12883502

Filed: September 16,2010

Attorney Docket No.

:DECISION ON PETITION TO MAKE SPECIAL
:UNDER 37 CFR 1.102(c)(1)

This is a decision on the electronic petition under 37 CFR 1.102 (c)(1), filed 26-OCT-2010 to make the above-identified application special based on applicant's age as set forth in MPEP § 708.02, Section IV.

The petition is **GRANTED**.

A grantable petition to make an application special under 37 CFR 1.102(c)(1), MPEP § 708.02, Section IV: Applicant's Age must include a statement by applicant or a registered practitioner having evidence that applicant is at least 65 years of age. No fee is required.

Accordingly, the above-identified application has been accorded "special" status and will be taken up for action by the examiner upon the completion of all pre-examination processing.

Telephone inquiries concerning this electronic decision should be directed to the Electronic Business Center at 866-217-9197.

All other inquiries concerning either the examination or status of the application should be directed to the Technology Center.

Doc Code: PET.GREEN
Document Description: Petition for Green Tech Pilot

PTO/SB/420 (11-10)
Approved for use through 01/31/2011. OMB 0651-0062
U.S. Patent and Trademark Office; U. S. DEPARTMENT OF COMMERCE
Under the Paperwork Reduction Act of 1995, no persons are required to respond to a collection of information unless it displays a valid OMB control number.

PETITION TO MAKE SPECIAL UNDER THE GREEN TECHNOLOGY PILOT PROGRAM

Attorney Docket Number: 1361-003DIV	Application Number (if known): 12883511	Filing date: 2010-09-16
First Named Inventor: Craig R. Horne		
Title: Redox Flow Battery System for Distributed Energy Storage		

APPLICANT HEREBY REQUESTS TO PARTICIPATE IN THE GREEN TECHNOLOGY PILOT PROGRAM FOR THE ABOVE-IDENTIFIED APPLICATION. See Instruction Sheet on page 2.

This petition must be timely filed electronically using the USPTO electronic filing system, EFS-Web.

1. By filing this petition:

   Applicant is requesting early publication: Applicant hereby requests early publication under 37 CFR 1.219 and the publication fee set forth in 37 CFR 1.18(d) accompanies this request.

2. By filing this petition: applicant is agreeing to make an election without traverse in a telephonic interview and elect an invention that meets the eligibility requirements for the Green Technology Pilot Program, if the Office determines that the claims are not obviously directed to a single invention. See Instruction Sheet.

3. This request is accompanied by statements of special status for the eligibility requirement.

4. The application contains no more than three (3) independent claims and twenty (20) total claims.

5. The application does not contain any multiple dependent claims.

6. Other attachments: Preliminary Amendment

Signature Robert M. Hansen	Date 1/19/2011
Name (Print/Typed) Robert M. Hansen	Registration Number 43,656

Note: Signatures of all the inventors or assignees of record of the entire interest or their representative(s) are required in accordance with 37 CFR 1.33 and 11.18. Please see 37 CFR 1.4(d) for the form of the signature. If necessary, submit multiple forms for more than one signature see below.*

☐ *Total of _____ forms are submitted.

The information is required to obtain or retain a benefit by the public which is to file (and by the USPTO to process) an application. Confidentiality is governed by 35 U.S.C. 122 and 37 CFR 1.11 and 1.14. This collection is estimated to take 12 hours to complete, including gathering, preparing, and submitting the completed application form to the USPTO. Time will vary depending upon the individual case. Any comments on the amount of time you require to complete this form and/or suggestions for reducing this burden, should be sent to the Chief Information Officer, U.S. Patent and Trademark Office, U.S. Department of Commerce, P.O. Box 1450, Alexandria, VA 22313-1450. DO NOT SEND FEES OR COMPLETED FORMS TO THIS ADDRESS. **SEND TO: Commissioner for Patents, P.O. Box 1450, Alexandria, VA 22313-1450.**

If you need assistance in completing the form, call 1-800-PTO-9199 and select option 2.

IN THE UNITED STATES PATENT AND TRADEMARK OFFICE

Docket No.: 1361-003DIV

In re the Application of: Craig Richard Horne — Group Art Unit: 1795

Serial No. 12/498,103 — Examiner: Adam A. Arciero

Filed: July 6, 2009 — Confirmation No. 7778

For: Redox Flow Battery System for Distributed Energy Storage

STATEMENT REGARDING PUBLICATION OF APPLICATION AND THE ELGIBILITY REQUIREMENT

Mail Stop Petitions
Commissioner for Patents
PO Box 1450
Alexandria, VA 22313-1450

Sir:

This Statement is filed in conjunction with a Petition To Make Special Under The Green Technology Pilot Program.

The undersigned representative of the Applicants' states that the publication fee for the above listed application is being paid in conjunction with the filing of the Petition To Make Special Under The Green Technology Pilot Program.

The undersigned representative of the Applicants further states that the above listed application is entitled to special status under the Green Technology Pilot Program because the invention materially contributes to the development of renewable energy resources and energy conservation. Specifically, the invention provides an economical, efficient and environmentally sound system for storing and delivering electrical power that is ideally suited for use with renewable energy systems, such as solar and wind generation systems. The present invention can store electrical power when it is available

from intermittent renewable power sources, such as wind farms and solar cells, and deliver electrical power to a utility grid or other load in response to demand, thereby rending such renewable power systems more compatible with the electricity grid infrastructure. In addition, being modular and scalable, storage systems of the present invention can be positioned close to loads and/or sources of power, thereby conserving energy by reducing transmission losses. Additionally, this application is a divisional of the application that issued as U.S. Patent No. 7,820,321 which was examined under the Green Technology Pilot Program.

A favorable decision on the Petition To Make Special Under The Green Technology Pilot Program is earnestly solicited.

Respectfully submitted,

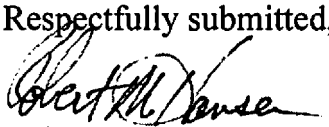

Date: January 19, 2010

Robert M. Hansen
Attorney for Applicants
Reg. No.: 43,656
CUSTOMER NO. 61275

The Marbury Law Group, PLLC
11800 Sunrise Valley Dr., Ste. 1000
Reston VA 20171
703-391-2900

IN THE UNITED STATES PATENT AND TRADEMARK OFFICE

Docket No.: 1361-003DIV1

In re the Application of: Craig Richard Horne — Group Art Unit: 1727

Serial No. 12/883,511 — Examiner: Adam A. Arciero

Filed: September 16, 2010 — Confirmation No. 5008

For: Redox Flow Battery System for Distributed Energy Storage

REPLACEMENT STATEMENT REGARDING PUBLICATION OF APPLICATION AND THE ELGIBILITY REQUIREMENT

Mail Stop Petitions
Commissioner for Patents
PO Box 1450
Alexandria, VA 22313-1450

Sir:

This Statement is filed in conjunction with a Petition To Make Special Under The Green Technology Pilot Program. This submission replaces the Statement filed with the Green Technology Pilot Program petition on January 19, 2011 in order to correct inadvertent errors in the application serial number, filing date and date of the statement.

The undersigned representative of the Applicants' states that the publication fee for the above listed application has been paid in conjunction with the filing of the Petition To Make Special Under The Green Technology Pilot Program.

The undersigned representative of the Applicants further states that the above listed application is entitled to special status under the Green Technology Pilot Program because the invention materially contributes to the development of renewable energy resources and energy conservation. Specifically, the invention provides an economical, efficient and environmentally sound system for storing and delivering electrical power

that is ideally suited for use with renewable energy systems, such as solar and wind generation systems. The present invention can store electrical power when it is available from intermittent renewable power sources, such as wind farms and solar cells, and deliver electrical power to a utility grid or other load in response to demand, thereby rending such renewable power systems more compatible with the electricity grid infrastructure. In addition, being modular and scalable, storage systems of the present invention can be positioned close to loads and/or sources of power, thereby conserving energy by reducing transmission losses. Additionally, this application is a divisional of the application that issued as U.S. Patent No. 7,820,321 which was examined under the Green Technology Pilot Program.

A favorable decision on the Petition To Make Special Under The Green Technology Pilot Program is earnestly solicited.

Respectfully submitted,

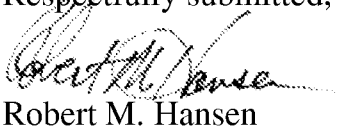

Date: January 25, 2011

Robert M. Hansen
Attorney for Applicants
Reg. No.: 43,656
CUSTOMER NO. 61275

The Marbury Law Group, PLLC
11800 Sunrise Valley Dr., Ste. 1000
Reston VA 20171
703-391-2900

UNITED STATES PATENT AND TRADEMARK OFFICE

UNITED STATES DEPARTMENT OF COMMERCE
United States Patent and Trademark Office
Address: COMMISSIONER FOR PATENTS
P.O. Box 1450
Alexandria, Virginia 22313-1450
www.uspto.gov

APPLICATION NO.	FILING DATE	FIRST NAMED INVENTOR	ATTORNEY DOCKET NO.	CONFIRMATION NO.
12/883,511	09/16/2010	Craig R. Horne	1361-003DIV1	5008

22208 7590 02/01/2011
The Marbury Law Group, PLLC
11800 SUNRISE VALLEY DRIVE
SUITE 1000
RESTON, VA 20191

EXAMINER	
ARCIERO, ADAM A	

ART UNIT	PAPER NUMBER
1727	

NOTIFICATION DATE	DELIVERY MODE
02/01/2011	ELECTRONIC

Please find below and/or attached an Office communication concerning this application or proceeding.

The time period for reply, if any, is set in the attached communication.

Notice of the Office communication was sent electronically on above-indicated "Notification Date" to the following e-mail address(es):

ptonotices@marburylaw.com

UNITED STATES PATENT AND TRADEMARK OFFICE

Commissioner for Patents
United States Patent and Trademark Office
P.O. Box 1450
Alexandria, VA 22313-1450
www.uspto.gov

02/01/2011

The Marbury Law Group, PLLC
11800 SUNRISE VALLEY DRIVE
SUITE 1000
RESTON VA 20191

In re Application of :
Horne et al. :
Application No. 12/883,511 :
Filed: 9/16/2010 :
Attorney Docket No. **1361-003DIV1** :

DECISION ON PETITION
TO MAKE SPECIAL UNDER
THE GREEN TECHNOLOGY
PILOT PROGRAM

This is a decision on the petition under 37 CFR 1.102, filed 1/19/2011, to make the above-identified application special under the pilot program for applications pertaining to Green Technologies as set forth in 74 Federal Register Notice 64666 (December 8, 2009) and amended by 75 Federal Register Notice 28554 (May 21, 2010) and 75 Federal Register Notice 69049 (November 10, 2010).

The petition is **GRANTED**.

A grantable petition to make an application special under 37 CFR 1.102 and the pilot program as set forth in 74 FR 64666 must be directed to a nonprovisional application filed under 35 USC 111(a) or be a national stage entry under 35 USC 371, exclusive of any reissue applications.

In order to qualify for special status, the following requirements must be met. 1) The application must have no more than 3 independent claims and no more than 20 total claims. 2) The application must not contain any multiple dependent claims. 3) The petition must state the basis for seeking special status, i.e., the claimed invention either: A) materially enhances the quality of the environment or B) materially contributes to: i) the discovery or development of renewable energy resources, ii) the more efficient utilization and conservation of energy resources, or iii) greenhouse gas emission reduction. 4) If the disclosure is not clear on its face that the claimed invention materially contributes under category (A) or (B), the petition must be accompanied by a statement by the applicant, assignee, or an attorney/agent registered to practice before the Office explaining how the materiality standard is met. 5) A statement that applicant will agree to make an election without traverse in a telephonic interview if a restriction requirement is made by the examiner. 6) The petition to make special must be filed electronically. 7) The petition must be filed at least one day prior to the date that a first Office Action appears in the Patent Application Information Retrieval (PAIR) system. 8) The petition must be accompanied by a

request for early publication in compliance with 37 CFR 1.219 and include the publication fee as set forth in 37 CFR 1.18(d).

The requirement for a fee for consideration of the petition to make special for applications pertaining to Green Technologies has been waived.

The instant petition complies with items 1 – 8 above. Accordingly, the above-identified application has been accorded "special" status.

Telephone inquires concerning this decision should be directed to Tom Dunn at 571-272-1171.

The application is being forwarded to the Technology Center Art Unit 1727 for action on the merits commensurate with this decision.

/Tom Dunn/

Tom Dunn
Quality Assurance Specialist
Technology Center 1700

UNITED STATES PATENT AND TRADEMARK OFFICE

Commissioner for Patents
United States Patent and Trademark Office
P.O. Box 1450
Alexandria, VA 22313-1450
www.uspto.gov

Decision Date : April 3, 2012

In re Application of :

Hongyong Zhang

DECISION ON PETITION
UNDER CFR 1.313(c)(2)

Application No : 12883526

Filed : 16-Sep-2010

Attorney Docket No : 07977-0088004

This is an electronic decision on the petition under 37 CFR 1.313(c)(2), filed April 3, 2012 , to withdraw the above-identified application from issue after payment of the issue fee.

The petition is **GRANTED.**

The above-identified application is withdrawn from issue for consideration of a submission under 37 CFR 1.114 (request for continued examination). See 37 CFR 1.313(c)(2).

Petitioner is advised that the issue fee paid in this application cannot be refunded. If, however, this application is again allowed, petitioner may request that it be applied towards the issue fee required by the new Notice of Allowance.

Telephone inquiries concerning this decision should be directed to the Patent Electronic Business Center (EBC) at 866-217-9197.

This application file is being referred to Technology Center AU 2814 for processing of the request for continuing examination under 37 CFR 1.114 .

Office of Petitions

Doc Code: PET.AUTO Document Description: Petition automatically granted by EFS-Web	PTO/SB/140 U.S. Patent and Trademark Office Department of Commerce

Electronic Petition Request	**PETITION TO WITHDRAW AN APPLICATION FROM ISSUE AFTER PAYMENT OF THE ISSUE FEE UNDER 37 CFR 1.313(c)**
Application Number	12883526
Filing Date	16-Sep-2010
First Named Inventor	Hongyong Zhang
Art Unit	2814
Examiner Name	WAI SING LOUIE
Attorney Docket Number	07977-0088004
Title	METHOD OF FABRICATING SEMICONDUCTOR DEVICE

An application may be withdrawn from issue for further action upon petition by the applicant. To request that the Office withdraw an application from issue, applicant must file a petition under this section including the fee set forth in § 1.17(h) and a showing of good and sufficient reasons why withdrawal of the application from issue is necessary.

APPLICANT HEREBY PETITIONS TO WITHDRAW THIS APPLICATION FROM ISSUE UNDER 37 CFR 1.313(c).

A grantable petition requires the following items:
(1) Petition fee; and
(2) One of the following reasons:
(a) Unpatentability of one or more claims, which must be accompanied by an unequivocal statement that one or more claims are unpatentable, an amendment to such claim or claims, and an explanation as to how the amendment causes such claim or claims to be patentable;
(b) Consideration of a request for continued examination in compliance with § 1.114 (for a utility or plant application only); or
(c) Express abandonment of the application. Such express abandonment may be in favor of a continuing application, but not a CPA under 37 CFR 1.53(d).

Petition Fee

☐ Applicant claims SMALL ENTITY status. See 37 CFR 1.27.

☐ Applicant is no longer claiming SMALL ENTITY status. See 37 CFR 1.27(g)(2).

☐ Applicant(s) status remains as SMALL ENTITY.

☒ Applicant(s) status remains as other than SMALL ENTITY

Reason for withdrawal from issue

◯ One or more claims are unpatentable ◉ Consideration of a request for continued examination (RCE) (List of Required Documents and Fees) ◯ Applicant hereby expressly abandons the instant application (any attorney/agent signing for this reason must have power of attorney pursuant to 37 CFR 1.32(b)).
RCE request,submission, and fee. ☐ I certify, in accordance with 37 CFR 1.4(d)(4) that : The RCE request ,submission, and fee have already been filed in the above-identified application on ☒ Are attached.
THIS PORTION MUST BE COMPLETED BY THE SIGNATORY OR SIGNATORIES I certify, in accordance with 37 CFR 1.4(d)(4) that I am: ◉ An attorney or agent registered to practice before the Patent and Trademark Office who has been given power of attorney in this application. ◯ An attorney or agent registered to practice before the Patent and Trademark Office, acting in a representative capacity. ◯ A sole inventor ◯ A joint inventor; I certify that I am authorized to sign this submission on behalf of all of the inventors ◯ A joint inventor; all of whom are signing this e-petition ◯ The assignee of record of the entire interest that has properly made itself of record pursuant to 37 CFR 3.71

Signature	/John F. Hayden/
Name	John F. Hayden
Registration Number	37640

UNITED STATES PATENT AND TRADEMARK OFFICE

UNITED STATES DEPARTMENT OF COMMERCE
United States Patent and Trademark Office
Address: COMMISSIONER FOR PATENTS
P.O. Box 1450
Alexandria, Virginia 22313-1450
www.uspto.gov

APPLICATION NO.	FILING DATE	FIRST NAMED INVENTOR	ATTORNEY DOCKET NO.	CONFIRMATION NO.
12/883,829	09/16/2010	Atsushi Suzuki	062184A	5586

38834 7590 10/04/2010

WESTERMAN, HATTORI, DANIELS & ADRIAN, LLP
1250 CONNECTICUT AVENUE, NW
SUITE 700
WASHINGTON, DC 20036

EXAMINER	
ART UNIT	PAPER NUMBER
3745	

NOTIFICATION DATE	DELIVERY MODE
10/04/2010	ELECTRONIC

Please find below and/or attached an Office communication concerning this application or proceeding.

The time period for reply, if any, is set in the attached communication.

Notice of the Office communication was sent electronically on above-indicated "Notification Date" to the following e-mail address(es):

patentmail@whda.com

UNITED STATES PATENT AND TRADEMARK OFFICE

Commissioner for Patents
United States Patent and Trademark Office
P.O. Box 1450
Alexandria, VA 22313-1450
www.uspto.gov

WESTERMAN, HATTORI, DANIELS & ADRIAN, LLP
1250 CONNECTICUT AVENUE, NW
SUITE 700
WASHINGTON DC 20036

In re Application of:
SUZUKI, ATSUSHI et al
Serial No.: 12/883,829
Filed: Sep. 16, 2010
Docket: 062184A
Title:

SHROUD AND ROTARY VANE WHEEL OF PROPELLER FAN AND PROPELLER FAN

:: DECISION ON REQUEST TO PARTICIPATE IN PATENT PROSECUTION HIGHWAY (PPH) AND PETITION TO MAKE SPECIAL UNDER 37 CFR 1.102(d)

This is a decision on the request to participate in the Patent Prosecution Highway (PPH) program and the petition under 37 CFR 1.102(d), filed Sep. 16, 2010, to make the above-identified application special.

The request and petition are **DISMISSED**.

A grantable request to participate in the PPH program and petition to make special require:

(1) The U.S. application must validly claim priority under 35 U.S.C. 119(a) to one or more corresponding application(s) filed in the JPO or to a PCT application that does not contain any priority claim, or the U.S. application must be a national stage entry of a PCT application that does not contain any priority claim;
(2) Applicant must submit a copy of the allowable/patentable claim(s) from the JPO application(s) along with an English translation thereof and a statement that the English translation is accurate;
(3) All the claims in the U.S. application must sufficiently correspond or be amended to sufficiently correspond to the allowable/patentable claim(s) in the JPO application(s);
(4) Examination of the U.S. application has not begun;
(5) Applicant must submit a copy of all the office actions from each of the JPO application(s) containing the allowable/patentable claim(s) along with an English translation thereof and a statement that the English translation is accurate; and
(6) Applicant must submit an IDS listing the documents cited by the JPO examiner in the JPO office action along with copies of documents except U.S. patents or U.S. patent application publications.

The request to participate in the PPH program and petition met all conditions except Item #6 above.

For JPO patent application 200501084, the request to participate in the PPH program and petition fail to include a copy of the JPO cited references, namely, 1. Microfilm of Japanese Utility Model Publication No. S60-109484 (Japanese Utility Model Application Laid-open No. S62-018398); 2. Japanese Patent Application Laid-open No. 2004-278370 and 3. Japanese Patent Application Laid-open No. 2003-254293.

For JPO patent application 200501086, the request to participate in the PPH program and petition fail to include a copy of the JPO cited references, namely, 1. Japanese Patent Application Laid-open No. 2001-182690; 2. Japanese Patent Application Laid-open No. H 10-089289; 3. Japanese Patent Application Laid-open No. 2005-105865; 4. Japanese Patent Application Laid-open No. H07-167095 and 5. Japanese Patent Application Laid-open No. S56-085594

Applicant is encouraged to cite and submit all relevant prior art references, if any, to facilitate examination in this application. Currently, this application is undergoing pre-examination processing.

Applicant is given a time period of **ONE MONTH or THIRTY DAYS**, whichever is longer, from the mailing date of this decision to correct the deficiencies. **NO EXTENSION OF TIME UNDER 37 CFR 1.136 IS PERMITTED.** If the deficiencies are not corrected with the time period given, the application will await action in its regular turn. Response must be filed via EFS-Web.

Telephone inquiries concerning this decision should be directed to Henry C. Yuen at 571-272-4856.

Petition is **dismissed**.

/Henry C. Yuen/

Henry C. Yuen, Special Programs Examiner
Technology Center 3700 – Mechanical Engineering,
Manufacturing and Products
571-272-4856

Doc Code: PET.GREEN
Document Description: Petition for Green Tech Pilot

PTO/SB/420 (05-10)
Approved for use through 05/31/2010. OMB 0651-0062
U.S. Patent and Trademark Office; U. S. DEPARTMENT OF COMMERCE
Under the Paperwork Reduction Act of 1995, no persons are required to respond to a collection of information unless it displays a valid OMB control number.

PETITION TO MAKE SPECIAL UNDER THE GREEN TECHNOLOGY PILOT PROGRAM

Attorney Docket Number: 3449-1037PUS2	Application Number (if known): 12/883,554	Filing date: September 16, 2010
First Named Inventor: Hwan Hee JEONG		
Title: SEMICONDUCTOR LIGHT EMITTING DEVICE HAVING ROUGHNESS LAYER		

APPLICANT HEREBY REQUESTS TO PARTICIPATE IN THE GREEN TECHNOLOGY PILOT PROGRAM FOR THE ABOVE-IDENTIFIED APPLICATION. See Instruction Sheet on page 2.

This petition must be timely filed electronically using the USPTO electronic filing system, EFS-Web.

1. By filing this petition:

   Applicant is requesting early publication: Applicant hereby requests early publication under 37 CFR 1.219 and the publication fee set forth in 37 CFR 1.18(d) accompanies this request.

2. By filing this petition: applicant is agreeing to make an election without traverse in a telephonic interview and elect an invention that meets the eligibility requirements set forth in the notice titled "Pilot Program for Green Technologies Including Greenhouse Gas Reduction," as modified by the notice titled "Elimination of Classification Requirement in the Green Technology Pilot Program," each of which was published in the Federal Register, if the Office determines that the claims are not obviously directed to a single invention.

3. This request is accompanied by statements of special status for the eligibility requirement.

4. The application contains no more than three (3) independent claims and twenty (20) total claims.

5. The application does not contain any multiple dependent claims.

6. Other attachments: _____

Signature	Date April 26, 2011
Name (Print/Typed) James T. Eller, Jr.	Registration Number 39538

Note: *Signatures of all the inventors or assignees of record of the entire interest or their representative(s) are required in accordance with 37 CFR 1.33 and 11.18. Please see 37 CFR 1.4(d) for the form of the signature. If necessary, submit multiple forms for more than one signature, see below*.*

☐ *Total of _____ forms are submitted.

The information is required to obtain or retain a benefit by the public which is to file (and by the USPTO to process) an application. Confidentiality is governed by 35 U.S.C. 122 and 37 CFR 1.11 and 1.14. This collection is estimated to take 12 hours to complete, including gathering, preparing, and submitting the completed application form to the USPTO. Time will vary depending upon the individual case. Any comments on the amount of time you require to complete this form and/or suggestions for reducing this burden, should be sent to the Chief Information Officer, U.S. Patent and Trademark Office, U.S. Department of Commerce, P.O. Box 1450, Alexandria, VA 22313-1450. DO NOT SEND FEES OR COMPLETED FORMS TO THIS ADDRESS. **SEND TO: Commissioner for Patents, P.O. Box 1450, Alexandria, VA 22313-1450.**

If you need assistance in completing the form, call 1-800-PTO-9199 and select option 2.

Docket No.: 3449-1037PUS2
(Patent)

IN THE UNITED STATES PATENT AND TRADEMARK OFFICE

Patent Application of:	Hwan Hee JEONG		
Application No.:	12/883,554	Confirmation No.:	5089
Filed:	September 16, 2010	Art Unit:	2826
For:	SEMICONDUCTOR LIGHT EMITTING DEVICE HAVING ROUGHNESS LAYER	Examiner:	Thomas L. Dickey

STATEMENT OF SPECIAL STATUS FOR THE ELIGIBILITY REQUIREMENT UNDER THE GREEN TECHNOLOGY PILOT PROGRAM

Commissioner for Patents
P.O. Box 1450
Alexandria, VA 22313-1450

Sir:

In support of the Petition to Make Special Under the Green Technology Pilot Program, it is respectfully submitted that the basis for the requested special status is that the invention claimed in the above-identified patent application materially contributes to the development of environmental quality and energy conservation. Specifically, the claimed invention relates to Semiconductor Light Emitting Device.

For example, Semiconductor Light Emitting Devices have a much longer life-span than conventional light sources such as fluorescent tubes or other traditional light sources. Semiconductor Light Emitting Devices also use less energy or power to operate than other traditional light sources. Thus, the environmental quality is significantly improved and energy is conserved.

Additionally, by filing this petition, Applicants agree to make an election without traverse in a telephone interview and elect an invention that meets the eligibility requirements set forth in the notice titled "Pilot Program for Green Technologies Including Greenhouse Gas Reduction," as modified by the notice titled "Elimination of Classification Requirement in the Green

Technology Pilot Program," each of which was published in the Federal Register, if the Office determines that the claims are not obviously directed to a single invention.

It is also submitted that this application meets the eligibility requirements to participate in the Green Technology Pilot Program, as listed in the attached Petition to Make Special Under the Green Technology Pilot Program.

Accordingly, it is respectfully requested the Petition be granted.

Should there be any outstanding matters that need to be resolved in the present application, the Examiner is respectfully requested to contact the undersigned below to conduct an interview in an effort to expedite prosecution in connection with the present application.

If necessary, the Director is hereby authorized in this, concurrent, and future replies to charge any fees required during the pendency of the above-identified application or credit any overpayment to Deposit Account No. 02-2448.

Dated: April 26, 2011

Respectfully submitted,

By _____
James T. Eller, Jr.
Registration No.: 39538
BIRCH, STEWART, KOLASCH & BIRCH, LLP
8110 Gatehouse Road, Suite 100 East
P.O. Box 747
Falls Church, VA 22040-0747
703-205-8000

UNITED STATES PATENT AND TRADEMARK OFFICE

UNITED STATES DEPARTMENT OF COMMERCE
United States Patent and Trademark Office
Address: COMMISSIONER FOR PATENTS
P.O. Box 1450
Alexandria, Virginia 22313-1450
www.uspto.gov

APPLICATION NO.	FILING DATE	FIRST NAMED INVENTOR	ATTORNEY DOCKET NO.	CONFIRMATION NO.
12/883,554	09/16/2010	Hwan Hee JEONG	3449-1037PUS2	5089

2292 7590 05/05/2011
BIRCH STEWART KOLASCH & BIRCH
PO BOX 747
FALLS CHURCH, VA 22040-0747

EXAMINER	
DICKEY, THOMAS L	
ART UNIT	**PAPER NUMBER**
2826	

NOTIFICATION DATE	DELIVERY MODE
05/05/2011	ELECTRONIC

Please find below and/or attached an Office communication concerning this application or proceeding.

The time period for reply, if any, is set in the attached communication.

Notice of the Office communication was sent electronically on above-indicated "Notification Date" to the following e-mail address(es):

mailroom@bskb.com

UNITED STATES PATENT AND TRADEMARK OFFICE

Commissioner for Patents
United States Patent and Trademark Office
P.O. Box 1450
Alexandria, VA 22313-1450
www.uspto.gov

BIRCH STEWART KOLASCH & BIRCH
PO BOX 747
FALLS CHURCH VA 22040-0747

In re Application of	:	
Hwan Hee JEONG	:	DECISION ON PETITION
Application No. 12/883,554	:	TO MAKE SPECIAL UNDER
Filed: September 16, 2010	:	THE GREEN TECHNOLOGY
Attorney Docket No. 3449-1037PUS2	:	PILOT PROGRAM

This is a decision on the petition under 37 CFR 1.102, filed on April 26, 2011, to make the above-identified application special under the pilot program for applications pertaining to Green Technologies as set forth 74 Federal Register Notice 64666 (December 8, 2009) and amended by 75 Federal Register Notice 28554 (May 21, 2010) and 75 Federal Register Notice 69049 (November 10, 2010).

The petition is **GRANTED**.

A grantable petition to make an application special under 37 CFR 1.102 and the pilot program as set forth in 74 FR 64666 must be directed to a nonprovisional application filed under 35 USC 111(a) or be a national stage entry under 35 USC 371, exclusive of any reissue applications.

In order to qualify for special status, the following requirements must be met. 1) The application must have no more than 3 independent claims and no more than 20 total claims. 2) The application must not contain any multiple dependent claims. 3) The petition must state the basis for seeking special status, i.e., the claimed invention either: A) materially enhances the quality of the environment or B) materially contributes to: i) the discovery or development of renewable energy resources, ii) the more efficient utilization and conservation of energy resources, or iii) greenhouse gas emission reduction. 4) If the disclosure is not clear on its face that the claimed invention materially contributes under category (A) or (B), the petition must be accompanied by a statement by the applicant, assignee, or an attorney/agent registered to practice before the Office explaining how the materiality standard is met. 5) A statement that applicant will agree to make an election without traverse in a telephonic interview if a restriction requirement is made by the examiner. 6) The petition to make special must be filed electronically. 7) The petition must be filed at least one day prior to the date that a first Office Action appears in the Patent Application Information Retrieval (PAIR) system. 8) The petition must be accompanied by a request for early publication in compliance with 37 CFR 1.219 and include the publication fee as set forth in 37 CFR 1.18(d).

The requirement for a fee for consideration of the petition to make special for applications pertaining to Green Technologies has been waived.

The instant petition complies with items 1 – 8 above. Accordingly, the above-identified application has been accorded "special" status.

Telephone inquires concerning this decision should be directed to Lee W. Young at 571-272-4549.

The application is being forwarded to the Technology Center Art Unit 2826 for action on the merits commensurate with this decision.

Lee W. Young
Quality Assurance Specialist
Technology Center 2800

Doc Code: PET.AUTO **Document Description: Petition automatically granted by EFS-Web**	PTO/SB/83 U.S. Patent and Trademark Office Department of Commerce

Electronic Petition Request	**REQUEST FOR WITHDRAWAL AS ATTORNEY OR AGENT AND CHANGE OF CORRESPONDENCE ADDRESS**
Application Number	12883672
Filing Date	16-Sep-2010
First Named Inventor	Christopher WOODRUFF
Art Unit	3632
Examiner Name	CHIEDU CHIBOGU
Attorney Docket Number	4856-001UA
Title	APPARATUS AND METHODS FOR PROVIDING A RETRACTIBLE MAST

◉ Please withdraw me as attorney or agent for the above identified patent application and the practitioners of record associated with Customer Number: 22429

The reason(s) for this request are those described in 37 CFR:

10.40(b)(4)

Certifications

☒ I/We have given reasonable notice to the client, prior to the expiration of the response period, that the practitioner(s) intend to withdraw from employment

☒ I/We have delivered to the client or a duly authorized representative of the client all papers and property (including funds) to which the client is entitled

☒ I/We have notified the client of any responses that may be due and the time frame within which the client must respond

Change the correspondence address and direct all future correspondence to the first named inventor or assignee that has properly made itself of record pursuant to 37 CFR 3.71:

Name	GEO SYSTEMS
Address	210 S. Washington Avenue
City	Titusville
State	FL
Postal Code	32796
Country	US

I am authorized to sign on behalf of myself and all withdrawing practitioners.	
Signature	/Benjamin J. Hauptman/
Name	Benjamin J. Hauptman
Registration Number	29310

UNITED STATES PATENT AND TRADEMARK OFFICE

Commissioner for Patents
United States Patent and Trademark Office
P.O. Box 1450
Alexandria, VA 22313-1450
www.uspto.gov

Decision Date : January 17, 2012

In re Application of :

Christopher WOODRUFF

Application No : 12883672

Filed : 16-Sep-2010

Attorney Docket No : 4856-001UA

DECISION ON REQUEST TO WITHDRAW AS ATTORNEY/AGENTOF RECORD

This is an electronic decision on the Request to Withdraw as attorney or agent of record under 37 CFR § 1.36(b), filed January 17, 2012

The request is **APPROVED.**

The request was signed by Benjamin J. Hauptman (registration no. 29310) on behalf of all attorneys/agents associated with Customer Number 22429 . All attorneys/agents associated with Cusotmer Number 22429 have been withdrawn.

Since there are no remaining attorneys of record, all future communications from the Office will be directed to the first named inventor or assignee that has properly made itself of record pursuant to 37 CFR 3.71, with correspondence address:

Name	GEO SYSTEMS
Name2	
Address 1	210 S. Washington Avenue
Address 2	
City	Titusville
State	FL
Postal Code	32796
Country	US

As a reminder, requester is required to inform the first named inventor or assignee that has properly made itself of record pursuant to 37 CFR 3.71 of the electronically processed petition.

Telephone inquiries concerning this decision should be directed to the Patent Electronic Business Center (EBC) at 866-217-9197.

Office of Petitions

UNITED STATES PATENT AND TRADEMARK OFFICE

COMMISSIONER FOR PATENTS
UNITED STATES PATENT AND TRADEMARK OFFICE
P.O. BOX 1450
ALEXANDRIA, VA 22313-1450
www.uspto.gov

BRIDGESTONE AMERICAS, INC.
1200 FIRESTONE PARKWAY
AKRON OH 44317

MAILED

MAR 02 2011

OFFICE OF PETITIONS

In re Application of :
Hergenrother, et al :
Application No. 12/883,778 :
Deposited: September 16, 2010 :
Attorney Docket No. P04048US3A :

ON PETITION

This is a decision on the petition under 37 CFR 1.57(a)(3), filed January 14, 2011, requesting that the above-identified application be accorded a filing date of September 16, 2010.

The petition under 37 CFR 1.57(a) is **DISMISSED**.

Application papers in the above-identified application were filed on September 16, 2010. However, on October 28, 2010, the Office of Patent Application Processing mailed applicants a "Notice of Incomplete Nonprovisional Application," notifying applicants that the application papers had not been accorded a filing date because the application was deposited without a specification, as required by 35 U.S.C. 112. In addition, the Notice required applicants to file an executed declaration.

Applicants filed the present petition and an executed declaration on January 14, 2011. Applicants argue that a filing date of September 16, 2010 should be accorded to the application pursuant to § 1.57(a)(3) because the ADS and preliminary amendment filed on September 16, 2010 contain a claim to priority of Application No. 11/387,569, of which the present filing is a continuation. Applicants state the specification was inadvertently not filed on September 16, 2010. Applicants assert the omitted specification is present in Application No. 11/387,569.

The applicable rule provides (in pertinent part):

> **§ 1.57 Incorporation by reference.**
>
> (a) Subject to the conditions and requirements of this paragraph, if all or a portion of the specification or drawing(s) is inadvertently omitted from an application, but the application contains a claim under § 1.55 for priority of a prior-filed foreign application, or a claim under § **1.78** for the benefit of a prior-filed provisional, nonprovisional, or international application, that was present on the filing date of

the application, and the inadvertently omitted portion of the specification or drawing(s) is completely contained in the prior-filed application, the claim under § **1.55** or § 1.78 shall also be considered an incorporation by reference of the prior-filed application as to the inadvertently omitted portion of the specification or drawing(s).

(1) The application must be amended to include the inadvertently omitted portion of the specification or drawing(s) within any time period set by the Office, but in no case later than the close of prosecution as defined by § **1.114**(b), or abandonment of the application, whichever occurs earlier. The applicant is also required to:

(i) Supply a copy of the prior-filed application, except where the prior-filed application is an application filed under **35 U.S.C. 111**;

(ii) Supply an English language translation of any prior-filed application that is in a language other than English; and

(iii) Identify where the inadvertently omitted portion of the specification or drawings can be found in the prior-filed application.

...

(3) If an application is not otherwise entitled to a filing date under § **1.53**(b), the amendment must be by way of a petition pursuant to this paragraph accompanied by the fee set forth in § **1.17**(f).

The petition lacks (1) above. The amendment filed with the petition is to add a *priority claim*, not the omitted material. Please amend the application to include the inadvertently omitted specification.

Petitioners filed a $130.00 one month extension of time with the present petition. This fee is unnecessary and will be refunded to deposit account no. 06-0925.

The application file does not indicate a change of address has been filed in this case, although the address given on the petition differs from the address of record. A change of address should be filed in this case in accordance with MPEP 601.03. A courtesy copy of this decision is being mailed to the address noted on the petition. However, until otherwise instructed, all future correspondence regarding this application will be mailed solely to the address of record.

Further correspondence with respect to this matter should be addressed as follows:

By Mail: Mail Stop PETITION
Commissioner for Patents
P. O. Box 1450
Alexandria, VA 22313-1450

By facsimile: **(571) 273-8300**
Attn: Office of Petitions

By hand: U. S. Patent and Trademark Office
Customer Service Window, Mail Stop Petitions
Randolph Building
401 Dulany Street
Alexandria, VA 22314

By internet: EFS-Web
www.uspto.gov/ebc/efs_help.html
(for help using EFS-Web call the
Patent Electronic Business Center
at (866) 217-9197)

Telephone inquiries concerning this matter may be directed to Senior Petitions Attorney Shirene Willis Brantley at (571) 272-3230.

Christopher Bottorff
Supervisor
Office of Petitions

CC: NATHAN T. LEWIS
JONES DAY
NORTH POINT, 901 LAKESIDE AVENUE
CLEVELAND, OH 44114

UNITED STATES PATENT AND TRADEMARK OFFICE

Commissioner for Patents
United States Patent and Trademark Office
P.O. Box 1450
Alexandria, VA 22313-1450
www.uspto.gov

MAILED

APR 12 2011

OFFICE OF PETITIONS

BRIDGESTONE AMERICAS, INC.
1200 FIRESTONE PARKWAY
AKRON OH 44317

In re Application of :
Hergenrother, et al :
Application No. 12/883,778 : ON PETITION
Deposited: September 16, 2010 :
Attorney Docket No. P04048US3A :

This is a decision on the renewed petition under 37 CFR 1.57(a)(3), filed March 10, 2011, requesting that the above-identified application be accorded a filing date of September 16, 2010.

The renewed petition under 37 CFR 1.57(a)(3) is **GRANTED**.

Application papers in the above-identified application were filed on September 16, 2010. However, on October 28, 2010, the Office of Patent Application Processing mailed applicants a "Notice of Incomplete Nonprovisional Application," notifying applicants that the application papers had not been accorded a filing date because the application was deposited without a specification, as required by 35 U.S.C. 112. In addition, the Notice required applicants to file an executed declaration.

Applicants argue that a filing date of September 16, 2010 should be accorded to the application pursuant to § 1.57(a)(3) because the ADS and preliminary amendment filed on September 16, 2010 contain a claim to priority of Application No. 11/387,569, of which the present filing is a continuation. Applicants state the specification and drawings were inadvertently not filed on September 16, 2010. Applicants assert the omitted specification and drawings are present in Application No. 11/387,569.

The applicable rule provides (in pertinent part):

> **§ 1.57 Incorporation by reference.**
>
> (a) Subject to the conditions and requirements of this paragraph, if all or a portion of the specification or drawing(s) is inadvertently omitted from an application, but the application contains a claim under § 1.55 for priority of a prior-filed foreign application, or a claim under § **1.78** for the benefit of a prior-filed provisional,

nonprovisional, or international application, that was present on the filing date of the application, and the inadvertently omitted portion of the specification or drawing(s) is completely contained in the prior-filed application, the claim under § **1.55** or § 1.78 shall also be considered an incorporation by reference of the prior-filed application as to the inadvertently omitted portion of the specification or drawing(s).

(1) The application must be amended to include the inadvertently omitted portion of the specification or drawing(s) within any time period set by the Office, but in no case later than the close of prosecution as defined by § **1.114**(b), or abandonment of the application, whichever occurs earlier. The applicant is also required to:

(i) Supply a copy of the prior-filed application, except where the prior-filed application is an application filed under **35 U.S.C. 111**;

(ii) Supply an English language translation of any prior-filed application that is in a language other than English; and

(iii) Identify where the inadvertently omitted portion of the specification or drawings can be found in the prior-filed application.

...

(3) If an application is not otherwise entitled to a filing date under § **1.53**(b), the amendment must be by way of a petition pursuant to this paragraph accompanied by the fee set forth in § **1.17**(f).

It is noted that the application as filed included an ADS and preliminary amendment, with a claim under 1.78 for the benefit of prior-filed Application No. 11/387,569. Thus, pursuant to 1.57, the application as filed is considered to have incorporated by reference the prior filed application as to the inadvertently omitted specification and drawings.

The instant petition includes an amendment adding the inadvertently omitted specification and drawings and an identification of where the inadvertently omitted specification and drawings may be found in the prior-filed application, along with the necessary petition fee.

In view of the incorporation by reference of the prior application, the specification and drawings supplied on March 10, 2011, would not constitute new matter if they were a part of the original disclosure of the prior application. Of course, the examiner is expected to compare the specification and drawings supplied on March 10, 2011, to the disclosure of prior application No. 11/387,569 in order to verify that they are an accurate copy of the prior specification and drawings and that they contain no new matter.

In view thereof, the petition is **GRANTED**.

Receipt of the declaration filed January 14, 2011 is acknowledged.

Petitioners have submitted a second $400.00 petition fee. Only one petition fee is required. Deposit account no. 06-0925 will be refunded $400.00.

The application is being forwarded to the Office of Patent Application Processing (OPAP) for **according of a filing date of September 16, 2010**, as a continuation application under 37 CFR 1.53(b) of prior application No. 11/387,569, including the copy of specification and drawings from the prior application supplied on March 10, 2011. Applicants will receive appropriate notifications regarding the fees owed, if any, and other information in due course from OPAP.

Telephone inquiries concerning this matter may be directed to Senior Petitions Attorney Shirene Willis Brantley at (571) 272-3230.

Christopher Bottorff
Supervisor
Office of Petitions

UNITED STATES PATENT AND TRADEMARK OFFICE

Commissioner for Patents
United States Patent and Trademark Office
P.O. Box 1450
Alexandria, VA 22313-1450
www.uspto.gov

JUNEAU PARTNERS
333 N Fairfax St.
Suite 305
ALEXANDRIA VA 22314

MAILED

MAY 1 8 2011

OFFICE OF PETITIONS

In re Application of :
Delbert Day :
Application No. 12/883,813 : DECISION ON PETITION
Filed: September 16, 2010 : TO MAKE SPECIAL UNDER
Attorney Docket No. BSCI-MAS : 37 CFR 1.102(c)(1)
:

This is a decision on the petition under 37 CFR 1.102(c)(1), filed April 5, 2011, to make the above-identified application special based on applicant's age as set forth in M.P.E.P. § 708.02, Section IV.

The petition is **GRANTED.**

A grantable petition to make an application special under 37 CFR 1.102(c)(1) and MPEP § 708.02, Section IV: Applicant's Age must be accompanied by evidence showing that at least one of the applicants is 65 years of age, or more, such as a birth certificate or a statement by applicant. No fee is required

The instant petition includes a statement from the attorney of record declaring that he/she is in possession of such evidence that shows the applicant is 65 years of age or older. Accordingly, the above-identified application has been accorded "special" status.

Telephone inquiries concerning this decision should be directed to Terri Johnson at 571-272-2991.

All other inquiries concerning either the examination or status of the application should be directed to the Technology Center.

The application is being forwarded to the Technology Center Art Unit 1618 for action on the merits commensurate with this decision.

/Terri Johnson/
Terri Johnson
Petitions Examiner
Office of Petitions

UNITED STATES PATENT AND TRADEMARK OFFICE

UNITED STATES DEPARTMENT OF COMMERCE
United States Patent and Trademark Office
Address: COMMISSIONER FOR PATENTS
P.O. Box 1450
Alexandria, Virginia 22313-1450
www.uspto.gov

APPLICATION NO.	FILING DATE	FIRST NAMED INVENTOR	ATTORNEY DOCKET NO.	CONFIRMATION NO.
12/883,829	09/16/2010	Atsushi Suzuki	062184A	5586

38834 7590 11/05/2010

WESTERMAN, HATTORI, DANIELS & ADRIAN, LLP
1250 CONNECTICUT AVENUE, NW
SUITE 700
WASHINGTON, DC 20036

EXAMINER	
ART UNIT	PAPER NUMBER
3745	

NOTIFICATION DATE	DELIVERY MODE
11/05/2010	ELECTRONIC

Please find below and/or attached an Office communication concerning this application or proceeding.

The time period for reply, if any, is set in the attached communication.

Notice of the Office communication was sent electronically on above-indicated "Notification Date" to the following e-mail address(es):

patentmail@whda.com

UNITED STATES PATENT AND TRADEMARK OFFICE

Commissioner for Patents
United States Patent and Trademark Office
P.O. Box 1450
Alexandria, VA 22313-1450
www.uspto.gov

WESTERMAN, HATTORI, DANIELS & ADRIAN, LLP
1250 CONNECTICUT AVENUE, NW
SUITE 700
WASHINGTON DC 20036

In re Application of:
SUZUKI, ATSUSHI et al
Serial No.: 12/883,829
Filed: Sep. 16, 2010
Docket: 062184A
Title:

SHROUD AND ROTARY VANE WHEEL OF PROPELLER FAN AND PROPELLER FAN

:: DECISION ON REQUEST TO PARTICIPATE IN PATENT PROSECUTION HIGHWAY (PPH) AND PETITION TO MAKE SPECIAL UNDER 37 CFR 1.102(d)

This is a decision on the request to participate in the Patent Prosecution Highway (PPH) program and the petition under 37 CFR 1.102(d), filed Sep. 16, 2010, to make the above-identified application special.

The request and petition are **DISMISSED**.

A grantable request to participate in the PPH program and petition to make special require:

(1) The U.S. application must validly claim priority under 35 U.S.C. 119(a) to one or more corresponding application(s) filed in the JPO or to a PCT application that does not contain any priority claim, or the U.S. application must be a national stage entry of a PCT application that does not contain any priority claim;
(2) Applicant must submit a copy of the allowable/patentable claim(s) from the JPO application(s) along with an English translation thereof and a statement that the English translation is accurate;
(3) All the claims in the U.S. application must sufficiently correspond or be amended to sufficiently correspond to the allowable/patentable claim(s) in the JPO application(s);
(4) Examination of the U.S. application has not begun;
(5) Applicant must submit a copy of all the office actions from each of the JPO application(s) containing the allowable/patentable claim(s) along with an English translation thereof and a statement that the English translation is accurate; and
(6) Applicant must submit an IDS listing the documents cited by the JPO examiner in the JPO office action along with copies of documents except U.S. patents or U.S. patent application publications.

The request to participate in the PPH program and petition met all conditions except Item #6 above.

For JPO patent application 200501084, the request to participate in the PPH program and petition fail to include a copy of the JPO cited references, namely, 1. Microfilm of Japanese Utility Model Publication No. S60-109484 (Japanese Utility Model Application Laid-open No. S62-018398); 2. Japanese Patent Application Laid-open No. 2004-278370 and 3. Japanese Patent Application Laid-open No. 2003-254293.

For JPO patent application 200501086, the request to participate in the PPH program and petition fail to include a copy of the JPO cited references, namely, 1. Japanese Patent Application Laid-open No. 2001-182690; 2. Japanese Patent Application Laid-open No. H 10-089289; 3. Japanese Patent Application Laid-open No. 2005-105865; 4. Japanese Patent Application Laid-open No. H07-167095 and 5. Japanese Patent Application Laid-open No. S56-085594

Applicant is encouraged to cite and submit all relevant prior art references, if any, to facilitate examination in this application. Currently, this application is undergoing pre-examination processing.

Applicant is given a time period of **ONE MONTH or THIRTY DAYS**, whichever is longer, from the mailing date of this decision to correct the deficiencies. **NO EXTENSION OF TIME UNDER 37 CFR 1.136 IS PERMITTED.** If the deficiencies are not corrected with the time period given, the application will await action in its regular turn. Response must be filed via EFS-Web.

Telephone inquiries concerning this decision should be directed to Henry C. Yuen at 571-272-4856.

Petition is **dismissed**.

/Henry C. Yuen/

Henry C. Yuen, Special Programs Examiner
Technology Center 3700 – Mechanical Engineering,
Manufacturing and Products
571-272-4856

UNITED STATES PATENT AND TRADEMARK OFFICE

UNITED STATES DEPARTMENT OF COMMERCE
United States Patent and Trademark Office
Address: COMMISSIONER FOR PATENTS
P.O. Box 1450
Alexandria, Virginia 22313-1450
www.uspto.gov

APPLICATION NO.	FILING DATE	FIRST NAMED INVENTOR	ATTORNEY DOCKET NO.	CONFIRMATION NO.
12/883,829	09/16/2010	Atsushi Suzuki	062184A	5586

38834 7590 11/05/2010

WESTERMAN, HATTORI, DANIELS & ADRIAN, LLP
1250 CONNECTICUT AVENUE, NW
SUITE 700
WASHINGTON, DC 20036

EXAMINER	
ART UNIT	PAPER NUMBER
3745	

NOTIFICATION DATE	DELIVERY MODE
11/05/2010	ELECTRONIC

Please find below and/or attached an Office communication concerning this application or proceeding.

The time period for reply, if any, is set in the attached communication.

Notice of the Office communication was sent electronically on above-indicated "Notification Date" to the following e-mail address(es):

patentmail@whda.com

UNITED STATES PATENT AND TRADEMARK OFFICE

Commissioner for Patents
United States Patent and Trademark Office
P.O. Box 1450
Alexandria, VA 22313-1450
www.uspto.gov

WESTERMAN, HATTORI, DANIELS & ADRIAN, LLP
1250 CONNECTICUT AVENUE, NW
SUITE 700
WASHINGTON DC 20036

In re Application of:
SUZUKI, ATSUSHI et al
Serial No.: 12/883,829
Filed: Sep. 16, 2010
Docket: 062184A
Title:

SHROUD AND ROTARY VANE WHEEL OF PROPELLER FAN AND PROPELLER FAN

:: DECISION ON REQUEST TO PARTICIPATE IN PATENT PROSECUTION HIGHWAY (PPH) AND PETITION TO MAKE SPECIAL UNDER 37 CFR 1.102(d)

This is a decision on the renewed request to participate in the Patent Prosecution Highway (PPH) program and the petition under 37 CFR 1.102(d), filed October 29, 2010, to make the above-identified application special.

The request and petition are **GRANTED**.

A grantable request to participate in the PPH program and petition to make special require:

(1) The U.S. application must validly claim priority under 35 U.S.C. 119(a) to one or more corresponding application(s) filed in the JPO or to a PCT application that does not contain any priority claim, or the U.S. application must be a national stage entry of a PCT application that does not contain any priority claim;
(2) Applicant must submit a copy of the allowable/patentable claim(s) from the JPO application(s) along with an English translation thereof and a statement that the English translation is accurate;
(3) All the claims in the U.S. application must sufficiently correspond or be amended to sufficiently correspond to the allowable/patentable claim(s) in the JPO application(s);
(4) Examination of the U.S. application has not begun;
(5) Applicant must submit a copy of all the office actions from each of the JPO application(s) containing the allowable/patentable claim(s) along with an English translation thereof and a statement that the English translation is accurate; and
(6) Applicant must submit an IDS listing the documents cited by the JPO examiner in the JPO office action along with copies of documents except U.S. patents or U.S. patent application publications.

In light of the petition being properly submitted, the request to participate in the PPH program and the petition comply with the above requirements. Accordingly, the above-identified application has been accorded "special" status.

The applicant is encouraged to cite and submit all relevant prior art references, if any, to facilitate examination in this application.

This application is undergoing pre-examination processing. Upon completion, the application will be forwarded to an examiner for examination.

Telephone inquiries concerning this decision should be directed to Henry C. Yuen at 571-272-4856. All other inquiries concerning the examination or status of the application should be directed to Edward Look, the SPE of Art Unit 3745, and 571-272-4820 for Class 415/191 and also accessible in the PAIR system at http://www.uspto.gov/ebc.index.html.

Petition is **granted**.

/Henry C. Yuen/

_____

Henry C. Yuen, Special Programs Examiner
Technology Center 3700 – Mechanical Engineering,
Manufacturing and Products
571-272-4856

UNITED STATES PATENT AND TRADEMARK OFFICE

UNITED STATES DEPARTMENT OF COMMERCE
United States Patent and Trademark Office
Address: COMMISSIONER FOR PATENTS
P.O. Box 1450
Alexandria, Virginia 22313-1450
www.uspto.gov

APPLICATION NO.	FILING DATE	FIRST NAMED INVENTOR	ATTORNEY DOCKET NO.	CONFIRMATION NO.
12/883,847	09/16/2010	Osamu Watanabe	3712174-02427	5626

29175 7590 10/19/2010

K&L Gates LLP
P. O. BOX 1135
CHICAGO, IL 60690

EXAMINER	
ART UNIT	PAPER NUMBER
2423	

NOTIFICATION DATE	DELIVERY MODE
10/19/2010	ELECTRONIC

Please find below and/or attached an Office communication concerning this application or proceeding.

The time period for reply, if any, is set in the attached communication.

Notice of the Office communication was sent electronically on above-indicated "Notification Date" to the following e-mail address(es):

chicago.patents@klgates.com

UNITED STATES PATENT AND TRADEMARK OFFICE

Commissioner for Patents
United States Patent and Trademark Office
P.O. Box 1450
Alexandria, VA 22313-1450
www.uspto.gov

K&L Gates LLP
P. O. BOX 1135
CHICAGO IL 60690

In re Application of: Watanabe et al.
Application No. 12/883,847
Filed: September 16, 2010
For: DEVICE CONTROL PROCESSING APPARATUS AND METHOD, DISPLAY PROCESSING APPARATUS AND METHOD, AND COMPUTER PROGRAM

DECISION ON REQUEST TO PARTICIPATE IN PATENT PROSECUTION HIGHWAY PROGRAM AND PETITION TO MAKE SPECIAL UNDER 37 CFR 1.102(d)

MAILED

OCT 18 2010

DIRECTOR OFFICE
TECHNOLOGY CENTER 2400

This is a decision on the request to participate in the Patent Prosecution Highway (PPH) program and the petition under 37 CFR 1.102(d), filed September 16, 2010, to make the above-identified application special.

The petition is **GRANTED.**

A grantable request to participate in the PPH program and petition to make special require:

(1) The U.S. application is
(a) a Paris Convention application which either (i) validly claims priority under 35 U.S.C. 119(a) and 37 CFR 1.55 to one or more applications filed in the JPO, or (ii) validly claims priority to a PCT application that contains no priority claims, or
(b) a national stage application under the PCT (an application which entered the national stage in the U.S. from a PCT international application after compliance with 35 U.S.C. 371), which PCT application (i) validly claims priority to an application filed in the JPO, or (ii) validly claims priority to a PCT application that contains no priority claims, or (iii) contains no priority claim, or
(c) a so-called bypass application filed under 35 U.S.C. 111 (a) which validly claims benefit under 35 U.S.C. 120 to a PCT application, which PCT application (i) validly claims priority to an application filed in the JPO, or (ii) validly claims priority to a PCT application that contains no priority claims, or (iii) contains no priority claim.

Where the JPO application that contains the allowable/patentable claims is not the same application for which priority is claimed in the U.S. application, applicant must identify the relationship between the JPO application that contains the allowable/patentable claims and the JPO priority application claimed in the U.S. application;

(2) Applicant must submit a copy of:
a. The allowable/patentable claim(s) from the Japanese application(s);
b. An English translation of the allowable/patentable claim(s), if the claims were published in a language other than English); and
c. A statement that the English translation is accurate;

(3) Applicant must:
a. Ensure that all the claims in the U.S. application sufficiently correspond or be amended to sufficiently correspond to the allowable/patentable claim(s) in the JPO application(s) and
b. Submit a claim correspondence table in English;

(4) Examination of the U.S. application has not begun;

(5) Applicant must submit:
a. A copy of all the office action(s) (which are relevant to patentability), excluding "Decision to Grant a Patent" from each of the Japanese application(s) containing the allowable/patentable claim(s);
b. An English language translation of the JPO office action(s) (if the office action(s) are not in the English language); and
c. A statement that the English translation is accurate;

(6) Applicant must submit:
a. An IDS listing the documents cited by the JPO examiner in the JPO office action (unless already filed in this application); and
b. Copies of all the documents cited in the JPO office action, except U.S. patents or U.S. patent application publications (unless already filed in this application).

The request to participate in the PPH program and petition are found to comply with all the above requirements. Accordingly, the above-identified application has been accorded "special" status.

Telephone inquiries concerning this decision should be directed to Christopher Grant at 571-272-7294.

All other inquiries concerning the examination or status of the application is accessible in the PAIR system at http://www.uspto.gov/ebc/index.html.

The application is undergoing pre-examination processing. Once it is released for examination, the application will be forwarded to the examiner for action on the merits commensurate with this decision.

/Christopher Grant/

Christopher Grant
Quality Assurance Specialist
Technology Center 2400

Doc Code: PPH.PCT.652
Document Description: Petition to make special under PCT-Patent Pros Hwy

PTO/SB/20PCT-KR (06-10)
Approved for use through 01/31/2012. OMB 0651-0058
U.S. Patent and Trademark Office; U. S. DEPARTMENT OF COMMERCE
Under the Paperwork Reduction Act of 1995, no persons are required to respond to a collection of information unless it displays a valid OMB control number.

REQUEST FOR PARTICIPATION IN THE PATENT COOPERATION TREATY - PATENT PROSECUTION HIGHWAY (PCT-PPH) PILOT PROGRAM BETWEEN THE KOREAN INTELLECTUAL PROPERTY OFFICE (KIPO) AND THE USPTO

Application No:	12/883,886	Filing date:	09/16/2010
First Named Inventor:	Bradley W. Gosnell		
Title of the Invention:	METHODS, SYSTEMS, AND COMPUTER READABLE MEDIA FOR PROVIDING FOREIGN ROUTING ADDRESS INFORMATION TO A TELECOMMUNICATIONS NETWORK GATEWAY		

THIS REQUEST FOR PARTICIPATION IN THE PCT-PPH PILOT PROGRAM ALONG WITH THE REQUIRED DOCUMENTS MUST BE SUBMITTED VIA EFS-WEB. INFORMATION REGARDING EFS-WEB IS AVAILABLE AT HTTP://WWW.USPTO.GOV/EBC/EFS_HELP.HTML

APPLICANT HEREBY REQUESTS PARTICIPATION IN THE PCT-PPH PROGRAM AND PETITIONS TO MAKE THE ABOVE-IDENTIFIED APPLICATION SPECIAL UNDER THE PCT-PPH PROGRAM.

The above-identified application is (1) a national stage entry of the corresponding PCT application, or (2) a national stage entry of another PCT application which claims priority to the corresponding PCT application, or (3) a national application that claims domestic/ foreign priority to the corresponding PCT application, or (4) a national application which forms the basis for the priority claim in the corresponding PCT application, or (5) a continuing application of a U.S. application that satisfies one of (1) to (4) above, or (6) a U.S. application that claims domestic benefit to a U.S. provisional application which forms the basis for the priority claim in the corresponding PCT application.

The corresponding PCT application number(s) is/are: PCT/US2010/049157

The international filing date of the corresponding PCT application(s) is/are: 09/16/2010

I. List of Required Documents:

a. **A copy of the latest international work product (WO/ISA, WO/IPEA, or IPER) in the above-identified corresponding PCT application(s)**

[X] Is attached.

[ ] Is not attached because the document is already in the U.S. application.

b. **A copy of all claims which were indicated as having novelty, inventive step and industrial applicability in the above-identified corresponding PCT application(s).**

[X] Is attached.

[ ] Is not attached because the document is already in the U.S. application.

c. **English translations of the documents in a. and b. above are attached (if the documents are not in the English language). A statement that the English translation is accurate is attached for the document in b. above.**

This collection of information is required by 35 U.S.C. 119, 37 CFR 1.55, and 37 CFR 1.102(d). The information is required to obtain or retain a benefit by the public, which is to file (and by the USPTO to process) an application. Confidentiality is governed by 35 U.S.C. 122 and 37 CFR 1.11 and 1.14. This collection is estimated to take 2 hours to complete, including gathering, preparing, and submitting the completed application form to the USPTO. Time will vary depending upon the individual case. Any comments on the amount of time you require to complete this form and/or suggestions for reducing this burden should be sent to the Chief Information Officer, U.S. Patent and Trademark Office, U.S. Department of Commerce, P.O. Box 1450, Alexandria, VA 22313-1450. DO NOT SEND FEES OR COMPLETED FORMS TO THIS ADDRESS.

PTO/SB/20PCT-KR (06-10)
Approved for use through 01/31/2012. OMB 0651-0058
U.S.Patent and Trademark Office; U.S. DEPARTMENT OF COMMERCE
Under the Paperwork Reduction Act of 1995, no persons are required to respond to a collection of information unless it displays a valid OMB control number.

REQUEST FOR PARTICIPATION IN THE PCT-PPH PILOT PROGRAM BETWEEN THE KIPO AND THE USPTO

(continued)

Application No.:	12/883,886
First Named Inventor:	Bradley W. Gosnell

d. (1) **An information disclosure statement listing the documents cited in the international work products (ISR, WO/ISA, WO/IPEA, IPER) of the corresponding PCT application.**

[X] Is attached

[ ] Has already been filed in the above-identified U.S. application on _____

(2) Copies of all documents (except) for U.S. patents or U.S. patent application publications)

[X] Are attached.

[ ] Have already been filed in the above-identified U.S. application on _____

II. Claims Correspondence Table:

Claims in US Application	Patentable Claims in the corresponding PCT Application	Explanation regarding the correspondence
1-36	1-36	Exactly the same

III. All the claims in the US application sufficiently correspond to the patentable claims in the corresponding PCT application.

Signature	Date July 26, 2011
Name (Print/Typed) Gregory A. Hunt	Registration Number 41,085

Privacy Act Statement

The **Privacy Act of 1974 (P.L. 93-579)** requires that you be given certain information in connection with your submission of the attached form related to a patent application or patent. Accordingly, pursuant to the requirements of the Act, please be advised that: (1) the general authority for the collection of this information is 35 U.S.C. 2(b)(2); (2) furnishing of the information solicited is voluntary; and (3) the principal purpose for which the information is used by the U.S. Patent and Trademark Office is to process and/or examine your submission related to a patent application or patent. If you do not furnish the requested information, the U.S. Patent and Trademark Office may not be able to process and/or examine your submission, which may result in termination of proceedings or abandonment of the application or expiration of the patent.

The information provided by you in this form will be subject to the following routine uses:

1. The information on this form will be treated confidentially to the extent allowed under the Freedom of Information Act (5 U.S.C. 552) and the Privacy Act (5 U.S.C 552a). Records from this system of records may be disclosed to the Department of Justice to determine whether disclosure of these records is required by the Freedom of Information Act.
2. A record from this system of records may be disclosed, as a routine use, in the course of presenting evidence to a court, magistrate, or administrative tribunal, including disclosures to opposing counsel in the course of settlement negotiations.
3. A record in this system of records may be disclosed, as a routine use, to a Member of Congress submitting a request involving an individual, to whom the record pertains, when the individual has requested assistance from the Member with respect to the subject matter of the record.
4. A record in this system of records may be disclosed, as a routine use, to a contractor of the Agency having need for the information in order to perform a contract. Recipients of information shall be required to comply with the requirements of the Privacy Act of 1974, as amended, pursuant to 5 U.S.C. 552a(m).
5. A record related to an International Application filed under the Patent Cooperation Treaty in this system of records may be disclosed, as a routine use, to the International Bureau of the World Intellectual Property Organization, pursuant to the Patent Cooperation Treaty.
6. A record in this system of records may be disclosed, as a routine use, to another federal agency for purposes of National Security review (35 U.S.C. 181) and for review pursuant to the Atomic Energy Act (42 U.S.C. 218(c)).
7. A record from this system of records may be disclosed, as a routine use, to the Administrator, General Services, or his/her designee, during an inspection of records conducted by GSA as part of that agency's responsibility to recommend improvements in records management practices and programs, under authority of 44 U.S.C. 2904 and 2906. Such disclosure shall be made in accordance with the GSA regulations governing inspection of records for this purpose, and any other relevant (*i.e.*, GSA or Commerce) directive. Such disclosure shall not be used to make determinations about individuals.
8. A record from this system of records may be disclosed, as a routine use, to the public after either publication of the application pursuant to 35 U.S.C. 122(b) or issuance of a patent pursuant to 35 U.S.C. 151. Further, a record may be disclosed, subject to the limitations of 37 CFR 1.14, as a routine use, to the public if the record was filed in an application which became abandoned or in which the proceedings were terminated and which application is referenced by either a published application, an application open to public inspection or an issued patent.
9. A record from this system of records may be disclosed, as a routine use, to a Federal, State, or local law enforcement agency, if the USPTO becomes aware of a violation or potential violation of law or regulation.

CLAIMS

What is claimed is:

1. A method for providing switch address information to a foreign telecommunications network, the method comprising:

at a call signaling message routing node in a first telecommunications network:

intercepting a call setup message that includes a called party number identifier and is directed towards a network gateway connected to at least one foreign telecommunications network;

accessing a foreign routing information database using an ENUM formatted query message to obtain foreign routing address information associated with the at least one foreign telecommunications network;

modifying the call setup message to include the address information; and

routing the modified call setup message towards the network gateway.

2. The method of claim 1 wherein the foreign routing address information is associated with the called party number and a switch device in the at least one foreign telecommunications network.

3. The method of claim 2 wherein accessing the foreign routing information database includes generating the ENUM formatted query message to request address information associated with the called party number and a switch device in the at least one foreign telecommunications network, transmitting the ENUM formatted query message to a server in the first telecommunications network that contains the address information and receiving, from the server, an ENUM formatted response message that includes the address information.

4. The method of claim 1 wherein the foreign routing information database is located within the call signaling message routing node.

5. The method of claim 1 wherein the foreign routing address information includes at least one of number portability information and least cost routing information.

6. The method of claim 1 wherein the gateway includes an international gateway providing a connection to at least one international telecommunications network.

7. The method of claim 2 wherein the foreign routing address information includes at least one of a routing number and a local routing number (LRN) associated with a switch device in the at least one foreign telecommunications network.

8. The method of claim 1 wherein the foreign routing address information includes a uniform resource identifier (URI) that is translated to generate at least one of a routing number and a local routing number.

9. The method of claim 1 wherein the call setup message includes an ISDN user part (ISUP) initial address message (IAM).

10. The method of claim 1 wherein the call signaling message routing node includes a signal transfer point (STP) or a DIAMETER signaling router (DSR).

11. The method of claim 1 wherein the foreign routing address information includes at least one of switch identifier information, switch address information, carrier identification information, service profile identifier (SPID) information associated with the at least one foreign telecommunications network.

12. A method for providing switch address information to a foreign telecommunications network, the method comprising:

at a call signaling message routing node in a first telecommunications network:

intercepting a call setup message that includes a called party number identifier and is directed towards a network gateway connected to at least one foreign telecommunications network;

accessing a foreign routing information database using an DIAMETER formatted query message to obtain foreign routing address information associated with the at least one foreign telecommunications network;

modifying the call setup message to include the address information; and

routing the modified call setup message towards the network gateway.

13. The method of claim 12 wherein the foreign routing address information is associated with the called party number and a switch device in the at least one foreign telecommunications network.

14. The method of claim 13 wherein accessing the foreign routing information database includes generating the DIAMETER formatted query message to request address information associated with the called party number and a switch device in the at least one foreign telecommunications network, transmitting the DIAMETER formatted query message to a server in the first telecommunications network that contains the address information, and receiving, from the server, a DIAMETER formatted response message that includes the address information.

15. The method of claim 12 wherein the foreign routing information database is located within the call signaling message routing node.

16. The method of claim 12 wherein the foreign routing address information includes at least one of number portability information and least cost routing information.

17. The method of claim 12 wherein the DIAMETER formatted query message includes a DIAMETER location information request (LIR) query message.

18. The method of claim 14 wherein the DIAMETER response message includes a DIAMETER location information answer (LIA) response message.

19. The method of claim 12 wherein the gateway includes an international gateway providing a connection to at least one foreign telecommunications network.

20. The method of claim 13 wherein the foreign routing address information includes at least one of a routing number and a local routing number (LRN) associated with a switch device in the at least one foreign telecommunications network.

21. The method of claim 12 wherein the foreign routing address information includes a uniform resource identifier (URI) that is translated to generate at least one of a routing number and a local routing number.

22. The method of claim 12 wherein the call setup message includes an ISDN user part (ISUP) initial address message (IAM).

23. The method of claim 12 wherein the call signaling message routing node includes a signal transfer point (STP) or a DIAMETER signaling router (DSR).

24. The method of claim 12 wherein the foreign routing address information includes at least one of switch identifier information, switch address information, carrier identification information, service profile identifier (SPID) information associated with the at least one foreign telecommunications network.

25. A system for providing switch address information to a foreign telecommunications network, the system comprising:

in a first telecommunications network:

a network gateway for receiving a modified call signaling message and routing the modified call signaling message to a foreign network; and

a call signaling message routing node configured for intercepting a call setup message that includes a called party number identifier and is directed towards a network gateway connected to at least one foreign telecommunications network, for accessing a foreign routing information database using an ENUM formatted query message to obtain foreign routing address information associated with the at least one foreign telecommunications network, and for modifying the call setup message to include the address information.

26. The system of claim 25 wherein the foreign routing address information is associated with the called party number and a switch device in the at least one foreign telecommunications network.

27. The system of claim 26 wherein the call signaling message routing node is configured for generating an ENUM formatted query message to request address information associated with the called party number and

a switch device in the at least one foreign telecommunications network, transmitting the ENUM formatted query message to a server in the first telecommunications network that contains the address information, and receiving, from the server, an ENUM formatted response message that includes the address information.

28. The system of claim 25 wherein the foreign routing information database is located within the call signaling message routing node.

29. The system of claim 25 wherein the foreign routing address information includes at least one of number portability information and least cost routing information.

30. The system of claim 25 wherein the gateway includes an international gateway providing a connection to at least one foreign telecommunications network.

31. The system of claim 26 wherein the foreign routing address information includes at least one of a routing number and a local routing number (LRN) associated with a switch device in the at least one foreign telecommunications network.

32. The system of claim 25 wherein the foreign routing address information includes a uniform resource identifier (URI) that is translated to generate at least one of a routing number and a local routing number.

33. The system of claim 25 wherein the call setup message includes an ISDN user part (ISUP) initial address message (IAM).

34. The system of claim 25 wherein the call signaling message routing node includes a signal transfer point (STP) or a DIAMETER signaling router (DSR).

35. The system of claim 25 wherein the foreign routing address information includes at least one of switch identifier information, switch address information, carrier identification information, service profile identifier (SPID) information associated with the at least one foreign telecommunications network.

36. A non-transitory computer readable medium having stored thereon executable instructions that when executed by the processor of a computer control the computer to perform steps comprising:

at a call signaling message routing node in a first telecommunications network:

intercepting a call setup message that includes a called party number identifier and is directed towards a network gateway connected to at least one foreign telecommunications network;

accessing a foreign routing information database using an ENUM formatted query message to obtain foreign routing address information associated with the at least one foreign telecommunications network;

modifying the call setup message to include the address information; and

routing the modified call setup message towards the network gateway.

UNITED STATES PATENT AND TRADEMARK OFFICE

UNITED STATES DEPARTMENT OF COMMERCE
United States Patent and Trademark Office
Address: COMMISSIONER FOR PATENTS
P.O. Box 1450
Alexandria, Virginia 22313-1450
www.uspto.gov

APPLICATION NO.	FILING DATE	FIRST NAMED INVENTOR	ATTORNEY DOCKET NO.	CONFIRMATION NO.
12/883,886	09/16/2010	Bradley W. Gosnell	1322/387/2	5698

25297 7590 08/04/2011

JENKINS, WILSON, TAYLOR & HUNT, P. A.
3100 Tower Blvd.
Suite 1200
DURHAM, NC 27707

EXAMINER	
BOST, DWAYNE D	
ART UNIT	**PAPER NUMBER**
2617	

MAIL DATE	DELIVERY MODE
08/04/2011	PAPER

Please find below and/or attached an Office communication concerning this application or proceeding.

The time period for reply, if any, is set in the attached communication.

UNITED STATES PATENT AND TRADEMARK OFFICE

Commissioner for Patents
United States Patent and Trademark Office
P.O. Box 1450
Alexandria, VA 22313-1450
www.uspto.gov

JENKINS, WILSON, TAYLOR & HUNT, P. A.
3100 Tower Blvd.
Suite 1200
DURHAM NC 27707

In re Application of	
GOSNELL et al.	
Application No.: 12/883,886	**: DECISION ON REQUEST TO**
Filed: 16 September 2010	**: PARTICIPATE IN THE PATENT**
Attorney Docket No.: 1322/387/2	**: PROSECUTION HIGHWAY**
For: METHODS, SYSTEMS, AND	**: PROGRAM AND PETITION**
COMPUTER READABLE MEDIA FOR	**: TO MAKE SPECIAL UNDER**
PROVIDING FOREIGN ROUTING ...	**: 37 CFR 1.102(a)**

This is a decision on the request to participate in the PCT Patent Prosecution Highway (PCT-PPH) pilot program and the petition under 37 CFR 1.102(a), filed on 26 July 2011, to make the above-identified application special.

The request and petition are **DISMISSED**.

Discussion

A grantable request to participate in the PCT-PPH pilot program and petition to make special require:

(1) The U.S. application must have an eligible relationship to one or more PCT applications where the ISA or IPEA are the JPO, EPO, KIPO, IPAU, Russia, Spain, Finland, Austria, or USPTO;

(2) At least one claim in the PCT application has novelty, inventive step, and industrial applicability and must be free of any observations in Box VIII in the latest work product in the international stage or applicant must identify and explain why the claim(s) is/are not subject to the observation in Box VIII;

(3) Applicant must submit a copy of the claim(s) from the PCT application(s) that have novelty, inventive step, and industrial applicability along with an English translation thereof and a statement that the English translation is accurate, if the claims are not in the English language;

(4) All the claims in the U.S. application must sufficiently correspond or be amended to sufficiently correspond to the claim(s) that have novelty, inventive step, and industrial applicability in the PCT application(s);

(5) Examination of the U.S. application has not begun;

(6) Applicant must submit a copy of the latest international work product from the PCT application indicating that the claim(s) have novelty, inventive step, and industrial applicability along with an English translation thereof.

(7) Applicant must submit an IDS listing the documents cited by the PCT examiner in the international work product along with copies of documents except U.S. patents or U.S. patent application publications.

(8) Applicant is required to submit a claims correspondence table in English which indicates how all the claims in the U.S. application correspond to the claims indicated as having novelty, inventive step and industrial applicability in the latest international work product.

Requirements (1-6) and (8) above are considered to have been met. However, the request to participate in the PPH pilot program and petition fail to meet requirement (7).

Regarding the requirement of condition (7), applicant has failed to cite USPGPub 2009-0074174 which was cited by the PCT examiner in the international work product.

Applicant is given **ONE** opportunity within a time period of **ONE MONTH or THIRTY DAYS**, whichever is longer, from the mailing date of this decision to correct the deficiencies. **NO EXTENSION OF TIME UNDER 37 CFR 1.136 IS PERMITTED.** If the deficiencies are not corrected with the time period given, the application will await action in its regular turn.

Response must be filed via the Electronic Filing System (EFS) using the document description: Petition to make special under PCT – Patent Pros Hwy. Any preliminary amendments and IDS submitted with the PPH documents must be separately indexed as a preliminary amendment and IDS, respectively.

Telephone inquiries concerning this decision should be directed to Lee W. Young at 571-272-4549.

All other inquiries concerning the examination or status of the application is accessible in the PAIR system at http://www.uspto.gov/ebc/index.html.

Lee W. Young
Quality Assurance Specialist
Technology Center 2600

Doc Code: PPH.PCT.652
Document Description: Petition to make special under PCT-Patent Pros Hwy

PTO/SB/20PCT-KR (06-10)
Approved for use through 01/31/2012. OMB 0651-0058
U.S. Patent and Trademark Office; U. S. DEPARTMENT OF COMMERCE
Under the Paperwork Reduction Act of 1995, no persons are required to respond to a collection of information unless it displays a valid OMB control number.

REQUEST FOR PARTICIPATION IN THE PATENT COOPERATION TREATY - PATENT PROSECUTION HIGHWAY (PCT-PPH) PILOT PROGRAM BETWEEN THE KOREAN INTELLECTUAL PROPERTY OFFICE (KIPO) AND THE USPTO

Application No:	12/883,886	Filing date:	09/16/2010
First Named Inventor:	Bradley W. Gosnell		
Title of the Invention:	METHODS, SYSTEMS, AND COMPUTER READABLE MEDIA, FOR PROVIDING FOREIGN ROUTING ADDRESS INFORMATION TO A TELECOMMUNICATIONS NETWORK GATEWAY		

THIS REQUEST FOR PARTICIPATION IN THE PCT-PPH PILOT PROGRAM ALONG WITH THE REQUIRED DOCUMENTS MUST BE SUBMITTED VIA EFS-WEB. INFORMATION REGARDING EFS-WEB IS AVAILABLE AT HTTP://WWW.USPTO.GOV/EBC/EFS_HELP.HTML

APPLICANT HEREBY REQUESTS PARTICIPATION IN THE PCT-PPH PROGRAM AND PETITIONS TO MAKE THE ABOVE-IDENTIFIED APPLICATION SPECIAL UNDER THE PCT-PPH PROGRAM.

The above-identified application is (1) a national stage entry of the corresponding PCT application, or (2) a national stage entry of another PCT application which claims priority to the corresponding PCT application, or (3) a national application that claims domestic/ foreign priority to the corresponding PCT application, or (4) a national application which forms the basis for the priority claim in the corresponding PCT application, or (5) a continuing application of a U.S. application that satisfies one of (1) to (4) above, or (6) a U.S. application that claims domestic benefit to a U.S. provisional application which forms the basis for the priority claim in the corresponding PCT application.

The corresponding PCT application number(s) is/are: PCT/US2010/049157

The international filing date of the corresponding PCT application(s) is/are: 09/16/2010

I. List of Required Documents:

a. A copy of the latest international work product (WO/ISA, WO/IPEA, or IPER) in the above-identified corresponding PCT application(s)

[X] Is attached.

[ ] Is not attached because the document is already in the U.S. application.

b. A copy of all claims which were indicated as having novelty, inventive step and industrial applicability in the above-identified corresponding PCT application(s).

[X] Is attached.

[ ] Is not attached because the document is already in the U.S. application.

c. English translations of the documents in a. and b. above are attached (if the documents are not in the English language). A statement that the English translation is accurate is attached for the document in b. above.

This collection of information is required by 35 U.S.C. 119, 37 CFR 1.55, and 37 CFR 1.102(d). The information is required to obtain or retain a benefit by the public, which is to file (and by the USPTO to process) an application. Confidentiality is governed by 35 U.S.C. 122 and 37 CFR 1.11 and 1.14. This collection is estimated to take 2 hours to complete, including gathering, preparing, and submitting the completed application form to the USPTO. Time will vary depending upon the individual case. Any comments on the amount of time you require to complete this form and/or suggestions for reducing this burden should be sent to the Chief Information Officer, U.S. Patent and Trademark Office, U.S. Department of Commerce, P.O. Box 1450, Alexandria, VA 22313-1450. DO NOT SEND FEES OR COMPLETED FORMS TO THIS ADDRESS.

PTO/SB/20PCT-KR (06-10)
Approved for use through 01/31/2012. OMB 0651-0058
U.S.Patent and Trademark Office; U.S. DEPARTMENT OF COMMERCE
Under the Paperwork Reduction Act of 1995, no persons are required to respond to a collection of information unless it displays a valid OMB control number.

REQUEST FOR PARTICIPATION IN THE PCT-PPH PILOT PROGRAM BETWEEN THE KIPO AND THE USPTO

(continued)

Application No.:	12/883,886
First Named Inventor:	Bradley W. Gosnell

d. (1) **An information disclosure statement listing the documents cited in the international work products (ISR, WO/ISA, WO/IPEA, IPER) of the corresponding PCT application.**

[X] Is attached

[ ] Has already been filed in the above-identified U.S. application on _____

(2) Copies of all documents (except) for U.S. patents or U.S. patent application publications)

[X] Are attached.

[ ] Have already been filed in the above-identified U.S. application on _____

II. Claims Correspondence Table:

Claims in US Application	Patentable Claims in the corresponding PCT Application	Explanation regarding the correspondence
1-36	1-36	Exactly the same

III. All the claims in the US application sufficiently correspond to the patentable claims in the corresponding PCT application.

Signature	Date August 16, 2011
Name (Print/Typed) Gregory A. Hunt	Registration Number 41,085

Privacy Act Statement

The Privacy Act of 1974 (P.L. 93-579) requires that you be given certain information in connection with your submission of the attached form related to a patent application or patent. Accordingly, pursuant to the requirements of the Act, please be advised that: (1) the general authority for the collection of this information is 35 U.S.C. 2(b)(2); (2) furnishing of the information solicited is voluntary; and (3) the principal purpose for which the information is used by the U.S. Patent and Trademark Office is to process and/or examine your submission related to a patent application or patent. If you do not furnish the requested information, the U.S. Patent and Trademark Office may not be able to process and/or examine your submission, which may result in termination of proceedings or abandonment of the application or expiration of the patent.

The information provided by you in this form will be subject to the following routine uses:

1. The information on this form will be treated confidentially to the extent allowed under the Freedom of Information Act (5 U.S.C. 552) and the Privacy Act (5 U.S.C 552a). Records from this system of records may be disclosed to the Department of Justice to determine whether disclosure of these records is required by the Freedom of Information Act.
2. A record from this system of records may be disclosed, as a routine use, in the course of presenting evidence to a court, magistrate, or administrative tribunal, including disclosures to opposing counsel in the course of settlement negotiations.
3. A record in this system of records may be disclosed, as a routine use, to a Member of Congress submitting a request involving an individual, to whom the record pertains, when the individual has requested assistance from the Member with respect to the subject matter of the record.
4. A record in this system of records may be disclosed, as a routine use, to a contractor of the Agency having need for the information in order to perform a contract. Recipients of information shall be required to comply with the requirements of the Privacy Act of 1974, as amended, pursuant to 5 U.S.C. 552a(m).
5. A record related to an International Application filed under the Patent Cooperation Treaty in this system of records may be disclosed, as a routine use, to the International Bureau of the World Intellectual Property Organization, pursuant to the Patent Cooperation Treaty.
6. A record in this system of records may be disclosed, as a routine use, to another federal agency for purposes of National Security review (35 U.S.C. 181) and for review pursuant to the Atomic Energy Act (42 U.S.C. 218(c)).
7. A record from this system of records may be disclosed, as a routine use, to the Administrator, General Services, or his/her designee, during an inspection of records conducted by GSA as part of that agency's responsibility to recommend improvements in records management practices and programs, under authority of 44 U.S.C. 2904 and 2906. Such disclosure shall be made in accordance with the GSA regulations governing inspection of records for this purpose, and any other relevant (*i.e.*, GSA or Commerce) directive. Such disclosure shall not be used to make determinations about individuals.
8. A record from this system of records may be disclosed, as a routine use, to the public after either publication of the application pursuant to 35 U.S.C. 122(b) or issuance of a patent pursuant to 35 U.S.C. 151. Further, a record may be disclosed, subject to the limitations of 37 CFR 1.14, as a routine use, to the public if the record was filed in an application which became abandoned or in which the proceedings were terminated and which application is referenced by either a published application, an application open to public inspection or an issued patent.
9. A record from this system of records may be disclosed, as a routine use, to a Federal, State, or local law enforcement agency, if the USPTO becomes aware of a violation or potential violation of law or regulation.

CLAIMS

What is claimed is:

1. A method for providing switch address information to a foreign telecommunications network, the method comprising:

at a call signaling message routing node in a first telecommunications network:

intercepting a call setup message that includes a called party number identifier and is directed towards a network gateway connected to at least one foreign telecommunications network;

accessing a foreign routing information database using an ENUM formatted query message to obtain foreign routing address information associated with the at least one foreign telecommunications network;

modifying the call setup message to include the address information; and

routing the modified call setup message towards the network gateway.

2. The method of claim 1 wherein the foreign routing address information is associated with the called party number and a switch device in the at least one foreign telecommunications network.

3. The method of claim 2 wherein accessing the foreign routing information database includes generating the ENUM formatted query message to request address information associated with the called party number and a switch device in the at least one foreign telecommunications network, transmitting the ENUM formatted query message to a server in the first telecommunications network that contains the address information and receiving, from the server, an ENUM formatted response message that includes the address information.

4. The method of claim 1 wherein the foreign routing information database is located within the call signaling message routing node.

5. The method of claim 1 wherein the foreign routing address information includes at least one of number portability information and least cost routing information.

6. The method of claim 1 wherein the gateway includes an international gateway providing a connection to at least one international telecommunications network.

7. The method of claim 2 wherein the foreign routing address information includes at least one of a routing number and a local routing number (LRN) associated with a switch device in the at least one foreign telecommunications network.

8. The method of claim 1 wherein the foreign routing address information includes a uniform resource identifier (URI) that is translated to generate at least one of a routing number and a local routing number.

9. The method of claim 1 wherein the call setup message includes an ISDN user part (ISUP) initial address message (IAM).

10. The method of claim 1 wherein the call signaling message routing node includes a signal transfer point (STP) or a DIAMETER signaling router (DSR).

11. The method of claim 1 wherein the foreign routing address information includes at least one of switch identifier information, switch address information, carrier identification information, service profile identifier (SPID) information associated with the at least one foreign telecommunications network.

12. A method for providing switch address information to a foreign telecommunications network, the method comprising:

at a call signaling message routing node in a first telecommunications network:

intercepting a call setup message that includes a called party number identifier and is directed towards a network gateway connected to at least one foreign telecommunications network;

accessing a foreign routing information database using an DIAMETER formatted query message to obtain foreign routing address information associated with the at least one foreign telecommunications network;

modifying the call setup message to include the address information; and

routing the modified call setup message towards the network gateway.

13. The method of claim 12 wherein the foreign routing address information is associated with the called party number and a switch device in the at least one foreign telecommunications network.

14. The method of claim 13 wherein accessing the foreign routing information database includes generating the DIAMETER formatted query message to request address information associated with the called party number and a switch device in the at least one foreign telecommunications network, transmitting the DIAMETER formatted query message to a server in the first telecommunications network that contains the address information, and receiving, from the server, a DIAMETER formatted response message that includes the address information.

15. The method of claim 12 wherein the foreign routing information database is located within the call signaling message routing node.

16. The method of claim 12 wherein the foreign routing address information includes at least one of number portability information and least cost routing information.

17. The method of claim 12 wherein the DIAMETER formatted query message includes a DIAMETER location information request (LIR) query message.

18. The method of claim 14 wherein the DIAMETER response message includes a DIAMETER location information answer (LIA) response message.

19. The method of claim 12 wherein the gateway includes an international gateway providing a connection to at least one foreign telecommunications network.

20. The method of claim 13 wherein the foreign routing address information includes at least one of a routing number and a local routing number (LRN) associated with a switch device in the at least one foreign telecommunications network.

21. The method of claim 12 wherein the foreign routing address information includes a uniform resource identifier (URI) that is translated to generate at least one of a routing number and a local routing number.

22. The method of claim 12 wherein the call setup message includes an ISDN user part (ISUP) initial address message (IAM).

23. The method of claim 12 wherein the call signaling message routing node includes a signal transfer point (STP) or a DIAMETER signaling router (DSR).

24. The method of claim 12 wherein the foreign routing address information includes at least one of switch identifier information, switch address information, carrier identification information, service profile identifier (SPID) information associated with the at least one foreign telecommunications network.

25. A system for providing switch address information to a foreign telecommunications network, the system comprising:

in a first telecommunications network:

a network gateway for receiving a modified call signaling message and routing the modified call signaling message to a foreign network; and

a call signaling message routing node configured for intercepting a call setup message that includes a called party number identifier and is directed towards a network gateway connected to at least one foreign telecommunications network, for accessing a foreign routing information database using an ENUM formatted query message to obtain foreign routing address information associated with the at least one foreign telecommunications network, and for modifying the call setup message to include the address information.

26. The system of claim 25 wherein the foreign routing address information is associated with the called party number and a switch device in the at least one foreign telecommunications network.

27. The system of claim 26 wherein the call signaling message routing node is configured for generating an ENUM formatted query message to request address information associated with the called party number and

a switch device in the at least one foreign telecommunications network, transmitting the ENUM formatted query message to a server in the first telecommunications network that contains the address information, and receiving, from the server, an ENUM formatted response message that includes the address information.

28. The system of claim 25 wherein the foreign routing information database is located within the call signaling message routing node.

29. The system of claim 25 wherein the foreign routing address information includes at least one of number portability information and least cost routing information.

30. The system of claim 25 wherein the gateway includes an international gateway providing a connection to at least one foreign telecommunications network.

31. The system of claim 26 wherein the foreign routing address information includes at least one of a routing number and a local routing number (LRN) associated with a switch device in the at least one foreign telecommunications network.

32. The system of claim 25 wherein the foreign routing address information includes a uniform resource identifier (URI) that is translated to generate at least one of a routing number and a local routing number.

33. The system of claim 25 wherein the call setup message includes an ISDN user part (ISUP) initial address message (IAM).

34. The system of claim 25 wherein the call signaling message routing node includes a signal transfer point (STP) or a DIAMETER signaling router (DSR).

35. The system of claim 25 wherein the foreign routing address information includes at least one of switch identifier information, switch address information, carrier identification information, service profile identifier (SPID) information associated with the at least one foreign telecommunications network.

36. A non-transitory computer readable medium having stored thereon executable instructions that when executed by the processor of a computer control the computer to perform steps comprising:

at a call signaling message routing node in a first telecommunications network:

intercepting a call setup message that includes a called party number identifier and is directed towards a network gateway connected to at least one foreign telecommunications network;

accessing a foreign routing information database using an ENUM formatted query message to obtain foreign routing address information associated with the at least one foreign telecommunications network;

modifying the call setup message to include the address information; and

routing the modified call setup message towards the network gateway.

UNITED STATES PATENT AND TRADEMARK OFFICE

UNITED STATES DEPARTMENT OF COMMERCE
United States Patent and Trademark Office
Address: COMMISSIONER FOR PATENTS
P.O. Box 1450
Alexandria, Virginia 22313-1450
www.uspto.gov

APPLICATION NO.	FILING DATE	FIRST NAMED INVENTOR	ATTORNEY DOCKET NO.	CONFIRMATION NO.
12/883,886	09/16/2010	Bradley W. Gosnell	1322/387/2	5698

25297 7590 08/23/2011

JENKINS, WILSON, TAYLOR & HUNT, P. A.
3100 Tower Blvd.
Suite 1200
DURHAM, NC 27707

EXAMINER
BOST, DWAYNE D

ART UNIT	PAPER NUMBER
2617	

MAIL DATE	DELIVERY MODE
08/23/2011	PAPER

Please find below and/or attached an Office communication concerning this application or proceeding.

The time period for reply, if any, is set in the attached communication.

UNITED STATES PATENT AND TRADEMARK OFFICE

Commissioner for Patents
United States Patent and Trademark Office
P.O. Box 1450
Alexandria, VA 22313-1450
www.uspto.gov

JENKINS, WILSON, TAYLOR & HUNT, P. A.
3100 Tower Blvd.
Suite 1200
DURHAM NC 27707

In re Application of	
GOSNELL et al.	**: DECISION ON REQUEST TO**
Application No.: 12/883,886	**: PARTICIPATE IN THE PATENT**
Filed: 16 September 2010	**: PROSECUTION HIGHWAY**
Attorney Docket No.: 1322/387/2	**: PROGRAM AND PETITION**
For: METHODS, SYSTEMS, AND	**: TO MAKE SPECIAL UNDER**
COMPUTER READABLE MEDIA FOR	**: 37 CFR 1.102(a)**
PROVIDING FOREIGN ROUTING ...	

This is a decision on the request to participate in the PCT Patent Prosecution Highway (PCT-PPH) pilot program and the petition under 37 CFR 1.102(a), filed on 26 July 2011 and renewed 16 August 2011, to make the above-identified application special.

The request and petition are **GRANTED**.

Discussion

A grantable request to participate in the PCT-PPH pilot program and petition to make special require:

(1) The U.S. application must have an eligible relationship to one or more PCT applications where the ISA or IPEA are the JPO, EPO, KIPO, NPI, or USPTO;

(2) At least one claim in the PCT application has novelty, inventive step, and industrial applicability and must be free of any observations in Box VIII in the latest work product in the international stage or applicant must identify and explain why the claim(s) is/are not subject to the observation in Box VIII;

(3) Applicant must submit a copy of the claim(s) from the PCT application(s) that have novelty, inventive step, and industrial applicability along with an English translation thereof and a statement that the English translation is accurate, if the claims are not in the English language;

(4) All the claims in the U.S. application must sufficiently correspond or be amended to sufficiently correspond to the claim(s) that have novelty, inventive step, and industrial applicability in the PCT application(s);

(5) Examination of the U.S. application has not begun;

(6) Applicant must submit a copy of the latest international work product from the PCT application indicating that the claim(s) have novelty, inventive step, and industrial applicability along with an English translation thereof and a statement that the English translation is accurate if the latest international work product is not in the English language;

(7) Applicant must submit an IDS listing the documents cited by the PCT examiner in the international work product along with copies of documents except U.S. patents or U.S. patent application publications.

The request to participate in the PCT-PPH pilot program and petition comply with the above requirements. Accordingly, the above-identified application has been accorded "special" status.

Telephone inquiries concerning this decision should be directed to Lee W. Young at 571-272-4549.

All other inquiries concerning the examination or status of the application is accessible in the PAIR system at http://www.uspto.gov/ebc.index.html.

This application will be forwarded to the examiner for action on the merits commensurate with this decision once this application's formality reviews have been completed.

Lee W. Young
TQAS Technology Center 2600

UNITED STATES PATENT AND TRADEMARK OFFICE

Commissioner for Patents
United States Patent and Trademark Office
P.O. Box 1450
Alexandria, VA 22313-1450
www.uspto.gov

David L King
for: Trophyline LLC
5131 NE CR 340
High Springs FL 32643

MAILED

SEP 19 2011

OFFICE OF PETITIONS

In re Application of :
Green :
Application No. 12/883,897 : ON PETITION
Filed: September 16, 2010 :
Attorney Docket No. DN0175DIV :

This is a decision on the petition under 37 CFR 1.137(b), September 7, 2011, to revive the above-identified application.

The petition is **GRANTED**.

The application became abandoned on December 13, 2010, for failure to file a complete and timely response to the Notice to File Corrected Application Papers mailed October 12, 2010. A Notice of Abandonment was mailed June 20, 2011.

The replacement drawings filed September 7, 2011, are noted.

Telephone inquiries concerning this decision should be directed to the undersigned at (571) 272-3222.

The application file is being directed to the Office of Patent Application Processing further processing.

/Kenya A. McLaughlin/

Kenya A. McLaughlin
Petitions Attorney
Office of Petitions

UNITED STATES PATENT AND TRADEMARK OFFICE

Commissioner for Patents
United States Patent and Trademark Office
P.O. Box 1450
Alexandria, VA 22313-1450
www.uspto.gov

LOCKE LORD BISSELL & LIDDELL LLP
600 TRAVIS SUITE 2800
HOUSTON TX 77002-3095

MAILED
MAR 16 2012
OFFICE OF PETITIONS

In re Application of
Ajay V. Kulkarni
Application No. 12/883,900
Filed: September 16, 2010
Attorney Docket No. 0016422-253US

DECISION ON PETITION
TO WITHDRAW
FROM RECORD

This is a decision on the Request to Withdraw as attorney or agent of record under 37 C.F.R. § 1.36(b) filed March 7, 2012, which is being treated as a request to withdraw from employment in a proceeding before the Office under 37 C.F.R. § 10.40.

The request is **DISMISSED**.

A review of the file record indicates that Locke Lord Bissell & Liddell LLP does not have power of attorney in this patent application. Accordingly, the request to withdraw under 37 C.F.R. § 1.36(b) is not applicable.

The request to change the correspondence address of record is not accepted in view of Locke Lord Bissell & Liddell LLP not having power of attorney. See MPEP §§ 601.03 and 405.

All future communications from the Office will continue to be directed to the above-listed address until otherwise notified by applicant.

Currently, there is no outstanding Office action that requires a reply.

Telephone inquiries concerning this decision should be directed to the undersigned at (571) 272-7751.

/Joan Olszewski/
Joan Olszewski
Petitions Examiner
Office of Petitions

UNITED STATES PATENT AND TRADEMARK OFFICE

Commissioner for Patents
United States Patent and Trademark Office
P.O. Box 1450
Alexandria, VA 22313-1450
www.uspto.gov

MORRISON & FOERSTER LLP
1650 TYSONS BOULEVARD
SUITE 400
MCLEAN VA 22102

MAILED

FEB 01 2012

OFFICE OF PETITIONS

In re Application of:
Toshiki Honma
Application No. 12/883,908
Filed: September 16, 2010
Attorney Docket No. 325772062300

: DECISION ON REQUEST TO
: PARTICIPATE IN THE PATENT
: PROSECUTION HIGHWAY
: PROGRAM AND PETITION
: TO MAKE SPECIAL UNDER
: 37 CFR 1.102(a)

This is a decision on the request to participate in the Patent Prosecution Highway (PPH) program and the petition under 37 CFR 1.102(a), filed November 16, 2011, to make the above-identified application special.

The request and petition are **DISMISSED**.

Discussion

A grantable request to participate in the PPH program and petition to make special require:

1. The U.S. application is

   a. a Paris Convention application which either
      i. validly claims priority under 35 U.S.C. 119(a) and 37 CFR 1.55 to one or more applications filed in the JPO, or
      ii. validly claims priority under 35 U.S.C. 119(a)/365(a) to a PCT application that contains no priority claims,

   or

   b. a national stage application under the PCT (an application which entered the national stage in the U.S. from a PCT international application after compliance with 35 U.S.C. 371), which PCT application
      i. validly claims priority under 35 U.S.C. 365(b) to an application filed in the JPO, or
      ii. validly claims priority under 35 U.S.C. 365(b) to a PCT application that contains no priority claims, or
      iii. contains no priority claim,

   or

   c. a so-called bypass application filed under 35 U.S.C. 111(a) which validly claims benefit under 35 U.S.C. 120 to a PCT application, which PCT application
      i. validly claims priority under 35 U.S.C. 365(b) to an application filed in the JPO, or
      ii. validly claims priority under 35 U.S.C. 365(b) to a PCT application that contains no priority claims, or
      iii. contains no priority claim;
2. Applicant must submit a copy of:
   a. The allowable/patentable claim(s) from the JP application(s);
   b. An English translation of the allowable/patentable claim(s), and
   c. A statement that the English translation is accurate (if the claims were published in a language other than English);
3. Applicant must:
   a. Ensure that all the claims in the U.S. application must sufficiently correspond or be amended to sufficiently correspond to the allowable/patentable claim(s) in the JP application(s), and
   b. Submit a claims correspondence table in English;
4. Examination of the U.S. application has not begun;
5. Applicant must submit:
   a. A copy of all the office actions (which are relevant to patentability), excluding "Decision to Grant a Patent" from each of the JP application(s) containing the allowable/patentable claim(s);
   b. An English language translation of the JPO office action; and
   c. A statement that the English translation is accurate (if the office actions are not in the English language);
6. Applicant must submit:
   a. An IDS listing the documents cited by the JPO examiner in the JPO office action (unless already filed in this application); and
   b. Copies of all the documents cited in the JPO office action, except U.S. patents or U.S. patent application publications (unless already filed in this application);

This request to participate in the PPH program and petition is assessed as follows:

Conditions (1-2) and (4-6) above are considered to have been met. However, the request to participate in the PPH pilot program and petition does not appear to meet condition (3).

Regarding the requirement of condition (3), applicant has failed to ensure that all the claims in the U.S. application sufficiently correspond to the allowable/patentable claims in the JP application. Petitioner asserts on the Claims Correspondence Table that US claim 11 and the JP claim 1 "Both claims are substantially the same except US claim 11 is directed to a method, rather than the image processing apparatus of JP claim 1". US claim 1 requires "An image processing method for converting a monochrome image into a color image, the method comprising:" versus JP claim 1 requiring "An image processing apparatus for converting a monochrome image into a color image, the apparatus comprising:". The scope of these claims is clearly different. It is applicant's responsibility to ensure that all claims in the US application correspond to the allowed/patentable JP claims. Regarding US claim 11, independent claims of narrower scope are not permitted under this PPH agreement.

Telephone inquiries concerning this decision should be directed to Joan Olszewski at 571-272-7751.

All other inquiries concerning the examination or status of the application is accessible in the PAIR system at http://www.uspto.gov/ebc/index.html.

/dab/
David Bucci
Petitions Examiner
Office of Petitions

UNITED STATES PATENT AND TRADEMARK OFFICE

Commissioner for Patents
United States Patent and Trademark Office
P.O. Box 1450
Alexandria, VA 22313-1450
www.uspto.gov

MORRISON & FOERSTER LLP
1650 TYSONS BOULEVARD
SUITE 400
MCLEAN VA 22102

MAILED
MAR 19 2012
OFFICE OF PETITIONS

In re Application of:
Toshiki Honma
Application No. 12/883,908
Filed: September 16, 2010
Attorney Docket No. 325772062300

: DECISION ON REQUEST TO
: PARTICIPATE IN THE PATENT
: PROSECUTION HIGHWAY
: PROGRAM AND PETITION
: TO MAKE SPECIAL UNDER
: 37 CFR 1.102(a)

This is a decision on the second request to participate in the Patent Prosecution Highway (PPH) program and the petition under 37 CFR 1.102(a), filed February 17, 2012, to make the above-identified application special.

Petitioner asserts that regarding US claim 6 and JP claim 6 that "Both claims are substantially the same except the US appl[icatio]n. [i]s directed to a computer-readable storage medium, rather than a computer program of the JP appl[icatio]n. to conform with US practice." However, regarding the requirement of condition (3), applicant has failed to ensure that all the claims in the U.S. application (currently amended claims filed February 17, 2012) sufficiently correspond to the allowable/patentable claims in the JP application. Specifically, US claim 6 requires "A non-transitory computer-readable storage medium storing thereon a computer program for a computer provided in an image processing apparatus that converts a monochrome image into a color image, the computer program, when executed by the computer, causing the computer to implement:", while JP claim 6 requires "A computer program for a computer provided in an image processing apparatus that converts a monochrome image into a color image, the computer program, when executed by the computer, causing the computer to implement:". Consequently, scope of these claims is different. It is applicant's responsibility to ensure that all claims in the US application correspond to the allowed/patentable JP claims.

Further, petitioner is permitted only two attempts to qualify to participate in the Patent Prosecution Highway (PPH) program and petition under 37 CFR 1.102(a).

Therefore the request and petition are **DENIED**.

Since the deficiencies were not corrected, the application will await action in its regular turn.

Telephone inquiries concerning this decision should be directed to Joan Olszewski at 571-272-7751.

All other inquiries concerning the examination or status of the application is accessible in the PAIR system at http://www.uspto.gov/ebc/index.html.

Anthony Knight
Director
Office of Petitions

UNITED STATES PATENT AND TRADEMARK OFFICE

Commissioner for Patents
United States Patent and Trademark Office
P.O. Box 1450
Alexandria, VA 22313-1450
www.uspto.gov

FLIESLER MEYER LLP
650 CALIFORNIA STREET
14TH FLOOR
SAN FRANCISCO CA 94108

MAILED
APR 12 2011
OFFICE OF PETITIONS

In re Application of	:	
Eugene F. DUVAL	:	
Application No. 12/883,956	:	DECISION ON PETITION
Filed: September 16, 2010	:	
Attorney Docket No. DUVL-01000US4	:	

This is a decision on the petition under 37 CFR 1.53(e), filed October 26, 2010.

The petition is **Granted**.

On October 12, 2010, the Office mailed a Notice to File Corrected Application Papers, indicating that an application number and a filing date has been accorded, however figures 4a, 4b, 12-12c, 23a-28b, 30a, 30b, 47a-47c were omitted and replacement drawings were required.

Petitioner asserts that the figures were in fact deposited in the Office when filed on September 16, 2010, but were mislabeled.

A review of the Office records indicates that figures the were submitted at the time of filing,

Applicants have provided the Office with replacement drawings as required by the Office action mailed October 12, 2010.

In view of the above, the petition is **GRANTED**. The petition fee of $400 will be credited to petitioner's deposit account.

Telephone inquiries relating to this decision should be directed to Michelle R. Eason at (571) 272-4231. Telephone inquiries related to OIPE processing should be directed to their hotline at (571) 272-4100.

This application file is being referred to the Office of Patent Application Processing.

Thurman K. Page
Petitions Examiner
Office of Petitions

UNITED STATES PATENT AND TRADEMARK OFFICE

UNITED STATES DEPARTMENT OF COMMERCE
United States Patent and Trademark Office
Address: COMMISSIONER FOR PATENTS
P.O. Box 1450
Alexandria, Virginia 22313-1450
www.uspto.gov

APPLICATION NO.	FILING DATE	FIRST NAMED INVENTOR	ATTORNEY DOCKET NO.	CONFIRMATION NO.
12/883,970	09/16/2010	Jinliang DAI	11005.0074-02000	5856

97664 7590 10/07/2010

Huawei Technologies Co., Ltd./Finnegan
901 New York Avenue
NW
Washington, DC 20001

EXAMINER	
ART UNIT	PAPER NUMBER
2626	

MAIL DATE	DELIVERY MODE
10/07/2010	PAPER

Please find below and/or attached an Office communication concerning this application or proceeding.

The time period for reply, if any, is set in the attached communication.

UNITED STATES PATENT AND TRADEMARK OFFICE

Commissioner for Patents
United States Patent and Trademark Office
P.O. Box 1450
Alexandria, VA 22313-1450
www.uspto.gov

Huawei Technologies Co., Ltd./Finnegan
901 New York Avenue
NW
Washington DC 20001

In re Application of:
DAI, JINLIANG
Serial No.: 12/883,970
Filed: September 16, 2010

DECISION ON PETITION TO MAKE SPECIAL FOR NEW APPLICATION UNDER 37 C.F.R. § 1.102 & M.P.E.P. § 708.02

Title: **METHOD AND DEVICE FOR UPDATING STATUS OF SYNTHESIS FILTERS**

This is a decision on the petition filed on September 16, 2010 requesting to make the above-identified application special for accelerated examination procedure under 37 C.F.R. § 1.102(d).

The petition to make the application special is **GRANTED**.

The application is eligible for accelerated examination and the petition complies with the conditions for granting the application special status pursuant to the "Change to Practice for Petitions in Patent Applications to Make Special and for Accelerated Examination" published June 26, 2006, in the Federal Register. (71 Fed. Reg. 36323).

The prosecution of the instant application will be conducted expeditiously according to the following guidelines.

1. The application will be docketed to an examiner and taken up for action within two weeks of the date of this decision.

2. Restriction Practice:
   If the examiner determines that the claims are not directed to a single invention, a telephone request to elect one single invention will be made pursuant to MPEP 812.01. As a prerequisite to the grant of this petition, the applicant has agreed to make an oral election, by telephone, without traverse. If the applicant refuses to make an election without traverse, or the examiner cannot reach the applicant after a reasonable effort, the examiner will treat the first claimed invention (invention defined by claim 1) as having being constructively elected without traverse for examination.

3. Office action:

If it is determined that, after appropriate consultation, there is a potential rejection or any other issue to be addressed, the examiner will telephone the applicant and arrange an interview to discuss and resolve the issue. An Office action, other than a Notice of Allowance and Fee(s) Due (Notice of Allowance), will not be issued unless either: 1) an interview was conducted but did not result in agreed to action that places the application in condition for allowance, or, 2) a determination is made that an interview would be unlikely to result in the application being placed in condition for allowance, and 3) an internal conference has been held to review any rejection of any claim.

4. Time for Reply:
An Office action other than a Notice of Allowance or a final Office action will set a shortened statutory period of one month or thirty days, whichever is longer, for reply with no extension of time available under 37 CFR 1.136(a). Failure to timely file a reply within this non-extendible period for reply will result in the abandonment of the application.

5. Reply by Applicant:
A timely reply to an Office action other than the Notice of Allowance must be submitted electronically via EFS or EFS-web and limited to addressing the rejections, objections and requirement made. Any amendment that attempts to: 1) add claims which would result in more than three pending independent claims or more than twenty pending total claims; 2) present claims not encompassed by the pre-examination search or an updated accelerated examination support document; or 3) present claims that are directed a non-elected invention or an invention other than that previously claimed and examined in the application, will be treated as not fully responsive and will not be entered.

For any amendment to the claims (including any new claim) that is not encompassed by the accelerated examination support document, applicant must provide an updated accelerated examination support document that encompasses the amended or new claims at the time of filing of the amendment.

To proceed expeditiously with the examination, it is recommended that a reply with amendments made to any claim or with any new claim being added be accompanied by an updated accelerated examination support document or a statement explaining how the amended or new claim is supported by the original accelerated examination support document.

6. Information Disclosure Statement (IDS):
Any IDS filed during prosecution must be submitted electronically via EFS or EFS-web, accompanied by an updated accelerated examination support document, and be in compliance with 37 CFR 1.97 and 1.98.

7. Post-Allowance Processing:
To expedite processing of the allowed application into a patent, the applicant must: 1) pay the required fees within one month of the date of the Notice of Allowance, and 2) not

file any post allowance papers not required by the Office. In no event may the issue fee be paid and accepted later than three months from the date of the Notice of Allowance.

8. After-Final and Appeal Procedures:
To expedite prosecution, after receiving the final Office action, applicant must: 1) promptly file a notice of appeal, an appeal brief and appeal fees; and 2) not request a pre-appeal brief conference.

Any amendment, affidavit or other evidence filed after final Office action must comply with applicable rules and the requirements outlined in numbered paragraphs 5 and 6 above.

On appeal, the application will proceed according to normal appeal procedures. After appeal, the application will again be treated special.

9. Proceedings Outside the Normal Examination Process:
If the application becomes involved in a proceeding that is outside the normal examination process (e.g., a secrecy order, national security review, interference proceeding, petitions under 37 CFR 1.181, 182 or 183), the application will be treated special before and after such proceeding.

10. Final Disposition:
The twelve month goal of this accelerated examination procedure ends with a final disposition. The mailing of a final Office action, a Notice of Allowance, the filing of a Notice of Appeal, or the filing of a Request for Continued Examination (RCE) is the final disposition.

If, during prosecution, a paper is not filed electronically using EFS-web, a reply is filed but is not fully responsive, the application is involved in an appeal, or a proceeding outside normal examination process, the application will still be examined expeditiously, however, the final disposition may occur more than twelve months from the filing of the application.

Any inquiry regarding this decision should be directed to Doris To, Quality Assurance Specialist, at (571) 272-7629.

/Doris To/

Quality Assurance Specialist
Technology Center 2600
Communications

UNITED STATES PATENT AND TRADEMARK OFFICE

Commissioner for Patents
United States Patent and Trademark Office
P.O. Box 1450
Alexandria, VA 22313-1450
www.uspto.gov

Paper No.

MARGER JOHNSON & MCCOLLOM, P.C.
210 SW MORRISON STREET, SUITE 400
PORTLAND OR 97204

MAILED

DEC 14 2010

OFFICE OF PETITIONS

In re Application of :
Wredengagen, Cheng, Ng, :
Woodall, Ma, Liu, and Wang :
Application No. 12/883,974 : DECISION ON PETITION
Filed: September 16, 2010 : PURSUANT TO
Attorney Docket No. 7293-0287 : 37 C.F.R. § 1.47(A)
Title: SYSTEM AND METHOD FOR :
DETECTING A NON-VIDEO SOURCE IN :
VIDEO SIGNALS :

This is in response to the petition pursuant to 37 C.F.R. § 1.47(a), filed September 16, 2010. A supplement to this petition was received on December 7, 2010.

This petition is **GRANTED.**

On August 10, 2009, this application was filed, identifying Messrs. Wredengagen, Cheng, Ng, Woodall, Ma, Liu, and Wang as the joint inventors. On initial deposit, Applicant included this petition and a declaration that has been executed by each of the joint inventors save Mr. Wredengagen.

A grantable petition pursuant to 37 C.F.R. § 1.47(a) requires:

(1) the petition fee of $200;
(2) a surcharge of either $65 or $130 if the petition is not filed at the time of filing the application, as set forth in 37 C.F.R. § 1.16(f);
(3) a statement of the last known address of each non-signing inventor;
(4) either
    a) proof that a copy of the entire

application (specification, claims, drawings, and the oath or declaration) was sent or given to each non-signing inventor for review and proof that each non-signing inventor refuses to join in the application or

b) proof that each non-signing inventor cannot be found or reached after diligent effort, and;

(5) a declaration which complies with 37 C.F.R. § 1.63.

With this petition, Petitioner has asserted that Mr. Wredengagen, has refused to join this application[1], and has included a declaration that has been executed by six of the seven joint inventors, the last known address of the non-signing inventor,[2] proof that he was provided with a copy of the application,[3] and proof that the non-signing inventor refused to execute the declaration.[4]

Both the petition fee and the surcharge associated with the late submission of this petition will be charged to Deposit Account No. 13-1703, as authorized on the second page of the transmittal letter that was included on filing.

Each of the requirements of 37 C.F.R. § 1.47(a) has been satisfied, but for the second requirement, which is not applicable as this petition was included on initial deposit. This application is hereby accorded Rule 1.47(a) status. As provided in Rule 1.47, this Office will forward notice of this application's filing to the non-signing inventor at the address given in the declaration that was submitted concurrently with this petition. Notice of the filing of this application will also be published in the Official Gazette.

The Office of Patent Application Processing (OPAP) will be notified of this decision, and jurisdiction over the application is transferred to OPAP, so that the application may receive further processing.

Petitioner will receive appropriate notifications regarding the fees owed, if any, and other information in due course from OPAP.

---

1 Crowther declaration of facts, paragraph 7. See also the supplement to this petition, dated December 7, 2010.
2 Petition page 1 and Crowther declaration of facts, paragraph 9.
3 Id at 3. See also Exhibit A.
4 Crowther declaration of facts, paragraph 7. See also Exhibits A - D.

The general phone number for OPAP is 571-272-4000. Telephone inquiries **regarding this decision** should be directed to the undersigned at (571) 272-3225.[5]

/Paul Shanoski/
Paul Shanoski
Senior Attorney
Office of Petitions

5 Petitioner will note that all practice before the Office should be in writing, and the action of the Office will be based exclusively on the written record in the Office. See 37 C.F.R. § 1.2. As such, Petitioner is reminded that no telephone discussion may be controlling or considered authority for any further action(s) of Petitioner.

UNITED STATES PATENT AND TRADEMARK OFFICE

Commissioner for Patents
United States Patent and Trademark Office
P.O. Box 1450
Alexandria, VA 22313-1450
www.uspto.gov

G. Finn Wredengagen
79 Tidefall Drive
Toronto, Ontario M1W 1J1
CANADA

MAILED
DEC 14 2010
OFFICE OF PETITIONS

In re Application of :
Wredengagen, Cheng, Ng, :
Woodall, Ma, Liu, and Wang :
Application No. 12/883,974 :
Filed: September 16, 2010 : LETTER
Attorney Docket No. 7293-0287 :
Title: SYSTEM AND METHOD FOR :
DETECTING A NON-VIDEO SOURCE :
IN VIDEO SIGNALS :

Dear Mr. Wredengagen:

You are named a joint inventor in the above-identified United States patent application filed under the provisions of 35 U.S.C. § 116 (United States Code) and 37 C.F.R. § 1.47(a), Rules of Practice in Patent Cases. Should a patent be granted on the application, you will be designated therein as a joint inventor.

As a named inventor you are entitled to inspect any paper in the file wrapper of the application, order copies of all or any part thereof (at a prepaid cost per 37 C.F.R. § 1.19) or make your position of record in the application. Alternatively, you may arrange to do any of the preceding through a registered patent attorney or agent presenting written authorization from you. If you care to join the application, the attorney of record below would presumably assist you. Joining in the application would entail the filing of an appropriate oath or declaration by you pursuant to 37 C.F.R. § 1.63.

Telephone inquiries regarding this communication should be directed to the undersigned at (571) 272-3225. Requests for information regarding your application should be directed to the File Information Unit at (703) 308-2733. Information regarding how to pay for and order a copy of the application, or a specific paper in the application, should be directed to the Certification Division at (571) 272-3150 or 1-800-972-6382 (outside the Washington D.C. area).

/Paul Shanoski/
Paul Shanoski
Senior Attorney
Office of Petitions

cc: MARGER JOHNSON & MCCOLLOM, P.C.
210 SW MORRISON STREET, SUITE 400
PORTLAND OR 97204

PATENT
Attorney Docket No. UM-16926

IN THE UNITED STATES PATENT AND TRADEMARK OFFICE

In re Application of: Chamberlain et al.
Serial No. Not Yet Assigned — Group No. Not Yet Assigned
Filing Date: September 16, 2010 — Examiner: Not Yet Assigned
Entitled: Production of Viral Vectors

PETITION TO MAKE SPECIAL UNDER 37 CFR 1.102(d)

Mail Stop Petitions
Commissioner for Patents
P.O. Box 1450
Alexandria, VA 22313-1450

Dear Sir or Madam:

This petition is being submitted concurrently with the filing of a continuation application having priority to United States Patent Application No. 10/381,153 filed on October 9, 2003, that has priority to Patent Cooperation Treaty No. PCT/US2001/029496 filed on September 21, 2001, that has priority to United States Provisional Application No. 60/235,060 filed on September 25, 2000.

The Applicants respectfully request accelerated examination in accordance with 37 CFR 1.102(d) "Advancement of examination" which reads:

> (d) A petition to make an application special on the grounds other than those referred to in paragraph (c) of this section must be accompanied by the fee set forth in § 1.17(h)

The Applicants respectfully submit that the presently filed continuation application meets the requirements for applications pending more than five (5) years:

> The following is a list of special cases (those which are advanced out of turn for examination):
>
> ...
>
> (I) Applications pending more than 5 years, including those which, by relation to a prior United States application, have an effective pendency of more than 5 years. See, MPEP § 707.02.

MPEP § 708.1 List Of Special Cases. As shown above, the presently filed continuation application has an effective pendency of greater than five (5) as a result of its priority to United States Patent Application No. 10/381,153 filed on October 9, 2003.

Thank you for your consideration.

Date: September 16, 2010

By: 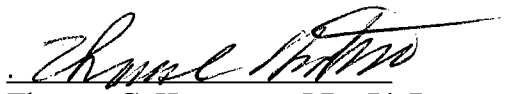

Thomas C. Howerton, J.D., Ph.D

Reg. No. 38,650
Medlen & Carroll, LLP
101 Howard Street, Suite 350
San Francisco, CA 94105
781-828-9870

UNITED STATES PATENT AND TRADEMARK OFFICE

UNITED STATES DEPARTMENT OF COMMERCE
United States Patent and Trademark Office
Address: COMMISSIONER FOR PATENTS
P.O. Box 1450
Alexandria, Virginia 22313-1450
www.uspto.gov

APPLICATION NO.	FILING DATE	FIRST NAMED INVENTOR	ATTORNEY DOCKET NO.	CONFIRMATION NO.
12/884,029	09/16/2010	Masahiro YAMADA	NGTOSH.137AUS	5992

20995 7590 03/15/2011

KNOBBE MARTENS OLSON & BEAR LLP
2040 MAIN STREET
FOURTEENTH FLOOR
IRVINE, CA 92614

EXAMINER	
ART UNIT	PAPER NUMBER
2482	

NOTIFICATION DATE	DELIVERY MODE
03/15/2011	ELECTRONIC

Please find below and/or attached an Office communication concerning this application or proceeding.

The time period for reply, if any, is set in the attached communication.

Notice of the Office communication was sent electronically on above-indicated "Notification Date" to the following e-mail address(es):

jcartee@kmob.com
efiling@kmob.com
eOAPilot@kmob.com

UNITED STATES PATENT AND TRADEMARK OFFICE

Commissioner for Patents
United States Patent and Trademark Office
P.O. Box 1450
Alexandria, VA 22313-1450
www.uspto.gov

KNOBBE MARTENS OLSON & BEAR LLP
2040 MAIN STREET
FOURTEENTH FLOOR
IRVINE, CA 92614

In re Application of: YAMADA, MASAHIRO, et al.
Application No. 12/884,029
Filed: September 16, 2010
For: VIDEO PROCESSOR, VIDEO DISPLAYING SYSTEM AND VIDEO DISPLAYING METHOD

DECISION ON REQUEST TO PARTICIPATE IN PATENT PROSECUTION HIGHWAY PROGRAM AND PETITION TO MAKE SPECIAL UNDER 37 CFR 1.102(d)

MAILED

MAR 15 2011

DIRECTOR OFFICE
TECHNOLOGY CENTER 2400

This is a decision on the request to participate in the Patent Prosecution Highway (PPH) program and the petition under 37 CFR 1.102(d), filed January 20, 2011, to make the above-identified application special.

The petition is **GRANTED.**

A grantable request to participate in the PPH program and petition to make special require:

(1) The U.S. application is
(a) a Paris Convention application which either (i) validly claims priority under 35 U.S.C. 119(a) and 37 CFR 1.55 to one or more applications filed in the JPO, or (ii) validly claims priority to a PCT application that contains no priority claims, or
(b) a national stage application under the PCT (an application which entered the national stage in the U.S. from a PCT international application after compliance with 35 U.S.C. 371), which PCT application (i) validly claims priority to an application filed in the JPO, or (ii) validly claims priority to a PCT application that contains no priority claims, or (iii) contains no priority claim, or
(c) a so-called bypass application filed under 35 U.S.C. 111 (a) which validly claims benefit under 35 U.S.C. 120 to a PCT application, which PCT application (i) validly claims priority to an application filed in the JPO, or (ii) validly claims priority to a PCT application that contains no priority claims, or (iii) contains no priority claim.

Where the JPO application that contains the allowable/patentable claims is not the same application for which priority is claimed in the U.S. application, applicant must identify the relationship between the JPO application that contains the allowable/patentable claims and the JPO priority application claimed in the U.S. application;

(2) Applicant must submit a copy of:
a. The allowable/patentable claim(s) from the Japanese application(s);
b. An English translation of the allowable/patentable claim(s), if the claims were published in a language other than English); and
c. A statement that the English translation is accurate;

(3) Applicant must:
a. Ensure that all the claims in the U.S. application sufficiently correspond or be amended to sufficiently correspond to the allowable/patentable claim(s) in the JPO application(s) and
b. Submit a claim correspondence table in English;

(4) Examination of the U.S. application has not begun;

(5) Applicant must submit:
a. A copy of all the office action(s) (which are relevant to patentability), excluding "Decision to Grant a Patent" from each of the Japanese application(s) containing the allowable/patentable claim(s);
b. An English language translation of the JPO office action(s) (if the office action(s) are not in the English language); and
c. A statement that the English translation is accurate;

(6) Applicant must submit:
a. An IDS listing the documents cited by the JPO examiner in the JPO office action (unless already filed in this application); and
b. Copies of all the documents cited in the JPO office action, except U.S. patents or U.S. patent application publications (unless already filed in this application).

The request to participate in the PPH program and petition are found to comply with all the above requirements. Accordingly, the above-identified application has been accorded "special" status.

Telephone inquiries concerning this decision should be directed to Mehrdad Dastouri at 571-272-7418

All other inquiries concerning the examination or status of the application is accessible in the PAIR system at http://www.uspto.gov/ebc/index.html.

The application is being forwarded to the examiner for action on the merits commensurate with this decision.

/Mehrdad Dastouri/

Mehrdad Dastouri
Quality Assurance Specialist
Technology Center 2400

UNITED STATES PATENT AND TRADEMARK OFFICE

Commissioner for Patents
United States Patent and Trademark Office
P.O. Box 1450
Alexandria, VA 22313-1450
www.uspto.gov

In re Application of
Joannes Raymond Mari Bekker

Application No. 12884077

Filed:

Attorney Docket No. 1206.011

:DECISION ON PETITION TO MAKE SPECIAL
:UNDER 37 CFR 1.102(c)(1)

This is a decision on the electronic petition under 37 CFR 1.102 (c)(1), filed 16-SEP-2010 to make the above-identified application special based on applicant's age as set forth in MPEP § 708.02, Section IV.

The petition is **GRANTED**.

A grantable petition to make an application special under 37 CFR 1.102(c)(1), MPEP § 708.02, Section IV: Applicant's Age must include a statement by applicant or a registered practitioner having evidence that applicant is at least 65 years of age. No fee is required.

Accordingly, the above-identified application has been accorded "special" status and will be taken up for action by the examiner upon the completion of all pre-examination processing.

Telephone inquiries concerning this electronic decision should be directed to the Electronic Business Center at 866-217-9197.

All other inquiries concerning either the examination or status of the application should be directed to the Technology Center.

Doc Code: PPH.PCT.652
Document Description: Petition to make special under PCT-Patent Pros Hwy

PTO/SB/20PCT-EP (05-10)
Approved for use through 01/31/2012. OMB 0651-0058
U.S. Patent and Trademark Office; U. S. DEPARTMENT OF COMMERCE
Under the Paperwork Reduction Act of 1995, no persons are required to respond to a collection of information unless it displays a valid OMB control number.

REQUEST FOR PARTICIPATION IN THE PATENT COOPERATION TREATY - PATENT PROSECUTION HIGHWAY (PCT-PPH) PILOT PROGRAM BETWEEN THE EUROPEAN PATENT OFFICE (EPO) AND THE USPTO

Application No:	Not Yet Assigned	Filing date:	Concurrently Herewith
First Named Inventor:	Paul TARDI		
Title of the Invention:	LIPID CARRIER COMPOSITIONS WITH ENHANCED BLOOD STABILITY		

THIS REQUEST FOR PARTICIPATION IN THE PCT-PPH PILOT PROGRAM ALONG WITH THE REQUIRED DOCUMENTS MUST BE SUBMITTED VIA EFS-WEB. INFORMATION REGARDING EFS-WEB IS AVAILABLE AT HTTP://WWW.USPTO.GOV/EBC/EFS_HELP.HTML

APPLICANT HEREBY REQUESTS PARTICIPATION IN THE PCT-PPH PROGRAM AND PETITIONS TO MAKE THE ABOVE-IDENTIFIED APPLICATION SPECIAL UNDER THE PCT-PPH PROGRAM.

The above-identified application is (1) a national stage entry of the corresponding PCT application, or (2) a national stage entry of another PCT application which claims priority to the corresponding PCT application, or (3) a national application that claims domestic/ foreign priority to the corresponding PCT application, or (4) a national application which forms the basis for the priority claim in the corresponding PCT application, or (5) a continuing application of a U.S. application that satisfies one of (1) to (4) above, or (6) a U.S. application that claims domestic benefit to a U.S. provisional application which forms the basis for the priority claim in the corresponding PCT application.

The corresponding PCT application number(s) is/are: PCT/CA2002/001726

The international date of the corresponding PCT application(s) is/are: 13 November 2002

I. List of Required Documents:

a. **A copy of the latest international work product (WO/ISA, WO/IPEA, or IPER) in the above–identified corresponding PCT application(s)**

☑ Is attached

☐ Is not attached because the document is already in the U.S. application.

b. **A copy of all claims which were indicated as having novelty, inventive step and industrial applicability in the above-identified corresponding PCT application(s).**

☑ Is attached.

☐ Is not attached because the document is already in the U.S. application.

c. **English translations of the documents in a. and b. above are attached (if the documents are not in the English language). A statement that the English translation is accurate is attached for the document in b. above.**

This collection of information is required by 35 U.S.C. 119, 37 CFR 1.55, and 37 CFR 1.102(d). The information is required to obtain or retain a benefit by the public, which is to file (and by the USPTO to process) an application. Confidentiality is governed by 35 U.S.C. 122 and 37 CFR 1.11 and 1.14. This collection is estimated to take 2 hours to complete, including gathering, preparing, and submitting the completed application form to the USPTO. Time will vary depending upon the individual case. Any comments on the amount of time you require to complete this form and/or suggestions for reducing this burden should be sent to the Chief Information Officer, U.S. Patent and Trademark Office, U.S. Department of Commerce, P.O. Box 1450, Alexandria, VA 22313-1450. DO NOT SEND FEES OR COMPLETED FORMS TO THIS ADDRESS.

PTO/SB/20PCT-EP (05-10)
Approved for use through 01/31/2012. OMB 0651-0058
U.S.Patent and Trademark Office; U.S. DEPARTMENT OF COMMERCE
Under the Paperwork Reduction Act of 1995, no persons are required to respond to a collection of information unless it displays a valid OMB control number.

REQUEST FOR PARTICIPATION IN THE PCT-PPH PILOT PROGRAM BETWEEN THE EPO AND THE USPTO

(continued)

Application No.:	Not Yet Assigned
First Named Inventor:	Paul TARDI

d. **(1) An information disclosure statement listing the documents cited in the international work products (ISR, WO/ISA, WO/IPEA, IPER) of the corresponding PCT application.**

☑ Is attached

☐ Has already been filed in the above-identified U.S. application on _____

(2) Copies of all documents (except) for U.S. patents or U.S. patent application publications)

☑ Are attached.

☐ Have already been filed in the above-identified U.S. application on _____

II. Claims Correspondence Table:

Claims in US Application	Patentable Claims in the corresponding PCT Application	Explanation regarding the correspondence
1	1	Exactly the same
2	2	Exactly the same
3	3	Exactly the same
4	4	Exactly the same
5	5	Exactly the same
6	6	Exactly the same
7	7	Exactly the same
8	8	Exactly the same
9	9	Exactly the same
10	10	Exactly the same
11	11	Exactly the same
12	12	Exactly the same
13	13	Exactly the same
14	14	Exactly the same
15	15	Exactly the same

III. All the claims in the US application sufficiently correspond to the patentable claims in the corresponding PCT application.

Signature /Kate H. Murashige/	Date September 16, 2010
Name (Print/Typed) Kate H. Murashige	Registration Number 29,959

Privacy Act Statement

The **Privacy Act of 1974 (P.L. 93-579)** requires that you be given certain information in connection with your submission of the attached form related to a patent application or patent. Accordingly, pursuant to the requirements of the Act, please be advised that: (1) the general authority for the collection of this information is 35 U.S.C. 2(b)(2); (2) furnishing of the information solicited is voluntary; and (3) the principal purpose for which the information is used by the U.S. Patent and Trademark Office is to process and/or examine your submission related to a patent application or patent. If you do not furnish the requested information, the U.S. Patent and Trademark Office may not be able to process and/or examine your submission, which may result in termination of proceedings or abandonment of the application or expiration of the patent.

The information provided by you in this form will be subject to the following routine uses:

1. The information on this form will be treated confidentially to the extent allowed under the Freedom of Information Act (5 U.S.C. 552) and the Privacy Act (5 U.S.C 552a). Records from this system of records may be disclosed to the Department of Justice to determine whether disclosure of these records is required by the Freedom of Information Act.
2. A record from this system of records may be disclosed, as a routine use, in the course of presenting evidence to a court, magistrate, or administrative tribunal, including disclosures to opposing counsel in the course of settlement negotiations.
3. A record in this system of records may be disclosed, as a routine use, to a Member of Congress submitting a request involving an individual, to whom the record pertains, when the individual has requested assistance from the Member with respect to the subject matter of the record.
4. A record in this system of records may be disclosed, as a routine use, to a contractor of the Agency having need for the information in order to perform a contract. Recipients of information shall be required to comply with the requirements of the Privacy Act of 1974, as amended, pursuant to 5 U.S.C. 552a(m).
5. A record related to an International Application filed under the Patent Cooperation Treaty in this system of records may be disclosed, as a routine use, to the International Bureau of the World Intellectual Property Organization, pursuant to the Patent Cooperation Treaty.
6. A record in this system of records may be disclosed, as a routine use, to another federal agency for purposes of National Security review (35 U.S.C. 181) and for review pursuant to the Atomic Energy Act (42 U.S.C. 218(c)).
7. A record from this system of records may be disclosed, as a routine use, to the Administrator, General Services, or his/her designee, during an inspection of records conducted by GSA as part of that agency's responsibility to recommend improvements in records management practices and programs, under authority of 44 U.S.C. 2904 and 2906. Such disclosure shall be made in accordance with the GSA regulations governing inspection of records for this purpose, and any other relevant (*i.e.*, GSA or Commerce) directive. Such disclosure shall not be used to make determinations about individuals.
8. A record from this system of records may be disclosed, as a routine use, to the public after either publication of the application pursuant to 35 U.S.C. 122(b) or issuance of a patent pursuant to 35 U.S.C. 151. Further, a record may be disclosed, subject to the limitations of 37 CFR 1.14, as a routine use, to the public if the record was filed in an application which became abandoned or in which the proceedings were terminated and which application is referenced by either a published application, an application open to public inspection or an issued patent.
9. A record from this system of records may be disclosed, as a routine use, to a Federal, State, or local law enforcement agency, if the USPTO becomes aware of a violation or potential violation of law or regulation.

UNITED STATES PATENT AND TRADEMARK OFFICE

UNITED STATES DEPARTMENT OF COMMERCE
United States Patent and Trademark Office
Address: COMMISSIONER FOR PATENTS
P.O. Box 1450
Alexandria, Virginia 22313-1450
www.uspto.gov

APPLICATION NO.	FILING DATE	FIRST NAMED INVENTOR	ATTORNEY DOCKET NO.	CONFIRMATION NO.
12/884,098	09/16/2010	Paul TARDI	532552000302	6105

25225 7590 12/27/2010

MORRISON & FOERSTER LLP
12531 HIGH BLUFF DRIVE
SUITE 100
SAN DIEGO, CA 92130-2040

EXAMINER	
ART UNIT	PAPER NUMBER
1612	

NOTIFICATION DATE	DELIVERY MODE
12/27/2010	ELECTRONIC

Please find below and/or attached an Office communication concerning this application or proceeding.

The time period for reply, if any, is set in the attached communication.

Notice of the Office communication was sent electronically on above-indicated "Notification Date" to the following e-mail address(es):

EOfficeSD@mofo.com

UNITED STATES PATENT AND TRADEMARK OFFICE

DEC 2 3 2010

Commissioner for Patents
United States Patent and Trademark Office
P.O. Box 1450
Alexandria, VA 22313-1450
www.uspto.gov

MORRISON & FOERSTER LLP
12531 HIGH BLUFF DRIVE
SUITE 100
SAN DIEGO CA 92130-2040

In re Application of	:	
TARDI, PAUL et al.	:	DECISION ON REQUEST TO
Application No. 12/884,098	:	PARTICIPATE IN PCT-PATENT
Filed: September 16, 2010	:	PROSECUTION HIGHWAY PILOT
Attorney Docket No. 532552000302	:	PROGRAM AND PETITION
	:	TO MAKE SPECIAL UNDER
	:	37 CFR 1.102(d)

This is a decision on the request to participate in the PCT-Patent Prosecution Highway (PPH) Pilot program and the petition under 37 CFR 1.102(d), filed September 16, 2010, to make the above-identified application special.

The request and petition are **GRANTED**.

A grantable request to participate in the PCT- PPH Pilot program and petition to make special require:

(1) The U.S. application is a national stage entry of the corresponding EPO PCT application;
(2) The latest work product in the international phase of the PCT application corresponding to the US application, namely the WO/ISA, or the WO/IPEA, or the IPER, indicates at least one claim in the PCT claim has novelty, inventive step and industrial applicability.
(3) Applicant must submit a copy of the allowable/patentable claim(s) from the corresponding PCT application(s);
(4) All the claims in the U.S. application must sufficiently correspond or be amended to sufficiently correspond to the allowable/patentable claim(s) in the PCT application;
(5) Examination of the U.S. application has not begun;
(6) Unless already filed in the U.S. application for which participation in the PCT-PPH pilot program is requested, applicant must submit a copy of the latest international work product, WO/ISA, or WO/IPEA or IPER, which indicated that the claim(s) has/have novelty, inventive step and industrial applicability along with an English translation thereof; and
(7) Applicant must submit an IDS listing the documents cited international work product, WO/ISA, or WO/IPEA or IPER along with copies of documents except U.S. patents or U.S. patent application publications.

The request to participate in the PCT-PPH Pilot program and petition comply with the above requirements. Accordingly, the above-identified application has been accorded "special" status.

Telephone inquiries concerning this decision should be directed to Ram R. Shukla at 571-272-0735.

All other inquiries concerning the examination or status of the application should be directed to Patent Application Information Retrieval (PAIR) system at the http://www.uspto.gov/ebc/index.html.

The application is being forwarded to the examiner for action on the merits commensurate with this decision.

Ram R. Shukla, Ph.D.
Supervisory Patent Examiner
TC 1600

RAM R. SHUKLA, PH.D.
SUPERVISORY PATENT EXAMINER

UNITED STATES PATENT AND TRADEMARK OFFICE

Commissioner for Patents
United States Patent and Trademark Office
P.O. Box 1450
Alexandria, VA 22313-1450
www.uspto.gov

SHAY GLENN LLP
2755 CAMPUS DRIVE
SUITE 210
SAN MATEO CA 94403

MAILED

MAR 31 2011

OFFICE OF PETITIONS

In re Application of :
Jonathan B. Parmer et al. :
Application No. 12/884,108 : DECISION ACCORDING STATUS
Filed: September 16, 2010 : UNDER 37 CFR 1.47(a)
Attorney Docket No. 10095-702.200 :

This is in response to the petition filed February 28, 2011 under 37 CFR 1.47(a).

The petition under 37 CFR 1.47(a) is **GRANTED**.

The above-identified application was filed on September 16, 2010 without an oath or declaration. Accordingly, on September 30, 2010, a "Notice To File Missing Parts Of Nonprovisional Application" ("Notice To File Missing Parts") was mailed, requiring *inter alia* an executed oath or declaration in compliance with 37 CFR 1.63 and a surcharge for its late filing.

In response, a three month extension of time request and the instant petition, seeking status under 37 CFR 1.47, was filed. Petitioners claim that joint inventor Jonathan B. Parmer refuses to execute the declaration.

A grantable petition under 37 CFR 1.47(a) requires: (1) proof that the non-signing inventor cannot be reached or refuses to sign the oath or declaration after having been presented with the application papers (specification, claims and drawings); (2) an acceptable oath or declaration in compliance with 35 U.S.C. §§ 115 and 116; (3) the petition fee; and (4) a statement of the last known address of the non-signing inventor.

The petition bears proof that the application papers were forwarded to and received by joint inventor Parmer, but to date has not returned an executed copy of the oath or declaration and thus by his actions, refuses to cooperate with the filing of the instant application.

The above-identified application and papers have been reviewed and found in compliance with 37 CFR 1.47(a). In view thereof, this application is hereby accorded Rule 1.47(a) status.

Thus, as provided in Rule 1.47c, this Office will forward notice of this application's filing to the non-signing inventor at the address given in the petition. Notice of the filing of this application will also be published in the Official Gazette.

The late filing surcharge, petition fee and the extension of time fee have been charged to deposit account no. 50-4050 per the authorizations included with the petition.

This matter is being referred to the Office of Patent Application Processing for further pre-examination processing.

Telephone inquiries concerning this matter may be directed to the undersigned Petitions Attorney at (571) 272-3212.

Patricia Faison-Ball
Senior Petitions Attorney
Office of Petitions

UNITED STATES PATENT AND TRADEMARK OFFICE

Commissioner for Patents
United States Patent and Trademark Office
P.O. Box 1450
Alexandria, VA 22313-1450
www.uspto.gov

JAMES F. MCLAUGHLIN
LAW OFFICE
11 ASHWOOD LANE
BROOKFIELD, CT 06804

MAILED

MAR 31 2011

OFFICE OF PETITIONS

In re Application of

James D. Corridon
Application No. 12/884,147
Filed: September 16, 2010
Attorney Docket No. JCOR001USU

DECISION ON PETITION
TO MAKE SPECIAL UNDER
37 CFR 1.102(c)(1)

This is a decision on the petition under 37 CFR 1.102(c)(1), filed February 22, 2011, to make the above-identified application special based on applicant's age as set forth in M.P.E.P. § 708.02, Section IV.

The petition is **GRANTED**.

A grantable petition to make an application special under 37 CFR 1.102(c)(1) and MPEP § 708.02, Section IV: Applicant's Age must be accompanied by evidence showing that at least one of the applicants is 65 years of age, or more, such as a birth certificate or a statement by applicant. No fee is required

The instant petition includes a declaration statement signed by applicant that he is at least 65 years of age. Accordingly, the above-identified application has been accorded "special" status.

Telephone inquiries concerning this decision should be directed to undersigned at 571-272-1642.

All other inquiries concerning either the examination or status of the application should be directed to the Technology Center.

The application is being forwarded to the Technology Center Art Unit 2612 for action on the merits commensurate with this decision.

/AMW/
April M. Wise
Petitions Examiner
Office of Petitions

UNITED STATES PATENT AND TRADEMARK OFFICE

UNITED STATES DEPARTMENT OF COMMERCE
United States Patent and Trademark Office
Address: COMMISSIONER FOR PATENTS
P.O. Box 1450
Alexandria, Virginia 22313-1450
www.uspto.gov

APPLICATION NO.	FILING DATE	FIRST NAMED INVENTOR	ATTORNEY DOCKET NO.	CONFIRMATION NO.
12/884,198	09/17/2010	Po-Chao Tsao	NAUP1246USA4	6267

27765 7590 11/16/2011

NORTH AMERICA INTELLECTUAL PROPERTY CORPORATION
P.O. BOX 506
MERRIFIELD, VA 22116

EXAMINER	
HA, NATHAN W	

ART UNIT	PAPER NUMBER
2814	

NOTIFICATION DATE	DELIVERY MODE
11/16/2011	ELECTRONIC

Please find below and/or attached an Office communication concerning this application or proceeding.

The time period for reply, if any, is set in the attached communication.

Notice of the Office communication was sent electronically on above-indicated "Notification Date" to the following e-mail address(es):

Patent.admin.uspto.Rcv@naipo.com
mis.ap.uspto@naipo.com

UNITED STATES PATENT AND TRADEMARK OFFICE

Commissioner for Patents
United States Patent and Trademark Office
P.O. Box 1450
Alexandria, VA 22313-1450
www.uspto.gov

NORTH AMERICA INTELLECTUAL PROPERTY CORPORATION
P.O. BOX 506
MERRIFIELD, VA 22116

In re Application of Po-Chao Tsao et al.	:	
Appl. No.: 12/884,198	:	DECISION ON PETITION
Filed: September 17, 2010	:	UNDER 37 C.F.R. § 1.59
Attorney Docket No.: NAUP1246USA4	:	
For: OPENING STRUCTURE WITH SIDEWALL OF AN OPENING COVERED WITH A DIELECTRIC THIN FILM	:	

This is a decision on the petition under 37 C.F.R. §1.59(b), filed September 27, 2011, to expunge information filed concurrently therewith from the above-identified application. The application has been allowed and a Notice of Allowance and Fee(s) Due was mailed on.

The petition is GRANTED.

Petitioner asserts that that the information filed on September 27, 2011, as a fifth Supplemental Information Disclosure Statement, contains a trade secret material and requests that it be expunged from the record.

The information in question has been determined by the examiner and by the undersigned to not be material to the examination of the instant application and may be expunged. The expunged material has been removed from the official file record.

Applicant is required to retain the expunged material(s) for the life of any patent which issues on the above-identified application.

Any inquiry regarding this decision should be directed to Hien H. Phan, Quality Assurance Specialist, at (571) 272-1606.

John W. Cabeca, TC Director
Technology Center 2800
Semiconductors, Electrical and Optical
Systems and Components

Doc Code: PET.GREEN
Document Description: Petition for Green Tech Pilot

PTO/SB/420 (05-10)
Approved for use through 01/31/2011. OMB 0651-0062
U.S. Patent and Trademark Office; U.S. DEPARTMENT OF COMMERCE
Under the Paperwork Reduction Act of 1995, no persons are required to respond to a collection of information unless it displays a valid OMB control number.

PETITION TO MAKE SPECIAL UNDER THE GREEN TECHNOLOGY PILOT PROGRAM

Attorney Docket Number:	31670/45332	Application Number (if known):	12/884,306-Conf. #6448	Filing date: September 17, 2010
First Named Inventor:	Eric Urban			
Title:	PULP MOLDED BIODEGRADABLE REMOVE-ABLY CONNECTABLE LID			

APPLICANT HEREBY REQUESTS TO PARTICIPATE IN THE GREEN TECHNOLOGY PILOT PROGRAM FOR THE ABOVE-IDENTIFIED APPLICATION. See Instruction Sheet on page 2.

This petition must be timely filed electronically using the USPTO electronic filing system, EFS-Web.

1. By filing this petition:

   Applicant is requesting early publication: Applicant hereby requests early publication under 37 CFR 1.219 and the publication fee set forth in 37 CFR 1.18(d) accompanies this request.

2. By filing this petition: applicant is agreeing to make an election without traverse in a telephonic interview and elect an invention that meets the eligibility requirements set forth in the notice titled "Pilot Program for Green Technologies Including Greenhouse Gas Reduction," as modified by the notice titled "Elimination of Classification Requirement in the Green Technology Pilot Program," each of which was published in the Federal Register, if the Office determines that the claims are not obviously directed to a single invention.

3. This request is accompanied by statements of special status for the eligibility requirement.

4. The application contains no more than three (3) independent claims and twenty (20) total claims.

5. The application does not contain any multiple dependent claims.

6. Other: The pending application is directed at a single invention that materially enhances the quality of the environment. The claims cover a lid that is made out of biodegradable materials but can still snap over and securely attach to a cup. Traditionally, such lids were made of materials that were not bio-degradable. As a result, the quality of the environment will be improved as lids will not be bio-degradable.

Signature	/W. J. Kramer #46,229/	Date	November 30, 2010
Name (Print/Typed)	William J. Kramer	Registration Number	46,229

***Note**: Signatures of all the inventors or assignees of record of the entire interest or their representative(s) are required in accordance with 37 CFR 1.33 and 11.18. Please see 37 CFR 1.4(d) for the form of the signature. If necessary, submit multiple forms if more than one signature, see below*.*

☐ *Total of 1 forms are submitted.

I hereby certify that this paper (along with any paper referred to as being attached or enclosed) is being transmitted via the Office electronic filing system in accordance with § 1.6(a)(4).

Dated: November 30, 2010 Signature: /W. J. Kramer #46,229/ (William J. Kramer)

UNITED STATES PATENT AND TRADEMARK OFFICE

UNITED STATES DEPARTMENT OF COMMERCE
United States Patent and Trademark Office
Address: COMMISSIONER FOR PATENTS
P.O. Box 1450
Alexandria, Virginia 22313-1450
www.uspto.gov

APPLICATION NO.	FILING DATE	FIRST NAMED INVENTOR	ATTORNEY DOCKET NO.	CONFIRMATION NO.
12/884,306	09/17/2010	Eric Urban	31670/45332	6448

4743 7590 12/08/2010
MARSHALL, GERSTEIN & BORUN LLP
233 SOUTH WACKER DRIVE
6300 WILLIS TOWER
CHICAGO, IL 60606-6357

EXAMINER	
ART UNIT	PAPER NUMBER
3781	

NOTIFICATION DATE	DELIVERY MODE
12/08/2010	ELECTRONIC

Please find below and/or attached an Office communication concerning this application or proceeding.

The time period for reply, if any, is set in the attached communication.

Notice of the Office communication was sent electronically on above-indicated "Notification Date" to the following e-mail address(es):

mgbdocket@marshallip.com

UNITED STATES PATENT AND TRADEMARK OFFICE

Commissioner for Patents
United States Patent and Trademark Office
P.O. Box 1450
Alexandria, VA 22313-1450
www.uspto.gov

MARSHALL, GERSTEIN & BORUN LLP
233 SOUTH WACKER DRIVE
6300 WILLIS TOWER
CHICAGO IL 60606-6357

In re Application of	:	
URBAN, ERIC	:	DECISION ON PETITION
Application No. 12/884,306	:	TO MAKE SPECIAL UNDER
Filed: Sep. 17, 2010	:	THE GREEN TECHNOLOGY
Attorney Docket No. 31670/45332	:	PILOT PROGRAM

This is a decision on the petition under 37 CFR 1.102, filed Nov. 30, 2010, to make the above-identified application special under the pilot program for applications pertaining to Green Technologies as set forth in 74 Federal Register Notice 64666 (December 8, 2009) and amended by 75 Federal Register Notice 28554 (May 21, 2010) and 75 Federal Register Notice 69049 (November 10, 2010).

The petition is **dismissed**.

A grantable petition to make an application special under 37 CFR 1.102 and the pilot program as set forth in 74 FR 64666 must be directed to a nonprovisional application filed under 35 USC 111(a) or be a national stage entry under 35 USC 371, exclusive of any reissue applications.

In order to qualify for special status, the following requirements must be met. 1) The application must have no more than 3 independent claims and no more than 20 total claims. 2) The application must not contain any multiple dependent claims. 3) The petition must state the basis for seeking special status, i.e., the claimed invention either: A) materially enhances the quality of the environment or B) materially contributes to: i) the discovery or development of renewable energy resources, ii) the more efficient utilization and conservation of energy resources, or iii) greenhouse gas emission reduction. 4) If the disclosure is not clear on its face that the claimed invention materially contributes under category (A) or (B), the petition must be accompanied by a statement by the applicant, assignee, or an attorney/agent registered to practice before the Office explaining how the materiality standard is met. 5) A statement that applicant will agree to make an election without traverse in a telephonic interview if a restriction requirement is made by the examiner. 6) The petition to make special must be filed electronically. 7) The petition must be filed at least one day prior to the date that a first Office Action appears in the Patent

Application Information Retrieval (PAIR) system. 8) The petition must be accompanied by a request for early publication in compliance with 37 CFR 1.219 and include the publication fee as set forth in 37 CFR 1.18(d).

The requirement for a fee for consideration of the petition to make special for applications pertaining to Green Technologies has been waived.

The petition lacks item # 4.

In regard to item 4, petitioner should note that the instant petition includes a statement identifying the basis for the special status (i.e., whether the instant invention (1) materially enhances the quality of the environment or materially contributes to (2) development of renewable energy resources or energy conservation, or (3) greenhouse gas reduction) as required by sections II and III of the notice. However, as stated in the notice, applicant must also provide a statement pertaining to the materiality standard if the application disclosure is not clear on its face as to the materiality of the basis for the special status of the invention. This petition lacks such a statement and it is not agreed that the application on its face meets that materiality standard. For example, it is not clear how the claimed mounting apparatus will provide and enhance the quality of the environment or contribute to development of renewable energy resources or energy conservation or greenhouse gas reduction. The disclosure appears to direct to a biodegradable lid structure. It is not seen how the claimed lid structure will provide and enhance the quality of the environment or contribute to development of renewable energy resources or energy conservation or greenhouse gas reduction

Any reconsideration of this decision should be submitted through the USPTO electronic filing system, EFS-Web, and selecting the document description of "Petition for Green Tech Pilot" on the EFS-Web screen.

Telephone inquiries concerning this decision should be directed to Henry C. Yuen at 571-272-4856.

The application will be forwarded to the Technology Center Art Unit 3781 for action in its regular turn.

/Henry C. Yuen/

Henry C. Yuen
Quality Assurance Specialist
Technology Center 3700

Doc Code: PET.GREEN
Document Description: Petition for Green Tech Pilot

PTO/SB/420 (05-10)
Approved for use through 01/31/2011. OMB 0651-0062
U.S. Patent and Trademark Office; U.S. DEPARTMENT OF COMMERCE
Under the Paperwork Reduction Act of 1995, no persons are required to respond to a collection of information unless it displays a valid OMB control number.

REQUEST FOR RECONSIDERATION OF PETITION TO MAKE SPECIAL UNDER THE GREEN TECHNOLOGY PILOT PROGRAM

Attorney Docket No: 31670/45332	Application No: 12/884,306-Conf. #6448	Filing date: September 17, 2010
First Named Inventor: Eric Urban		
Title: PULP MOLDED BIODEGRADABLE REMOVE-ABLY CONNECTABLE LID		

APPLICANT HEREBY REQUESTS TO PARTICIPATE IN THE GREEN TECHNOLOGY PILOT PROGRAM FOR THE ABOVE-IDENTIFIED APPLICATION. See Instruction Sheet on page 2.

This petition must be timely filed electronically using the USPTO electronic filing system, EFS-Web.

1. By filing this petition:

   Applicant is requesting early publication: Applicant hereby requests early publication under 37 CFR 1.219 and the publication fee set forth in 37 CFR 1.18(d) accompanies this request.

2. By filing this petition: applicant is agreeing to make an election without traverse in a telephonic interview and elect an invention that meets the eligibility requirements set forth in the notice titled "Pilot Program for Green Technologies Including Greenhouse Gas Reduction," as modified by the notice titled "Elimination of Classification Requirement in the Green Technology Pilot Program," each of which was published in the Federal Register, if the Office determines that the claims are not obviously directed to a single invention.
3. This request is accompanied by statements of special status for the eligibility requirement.
4. The application contains no more than three (3) independent claims and twenty (20) total claims.
5. The application does not contain any multiple dependent claims.
6. Other: The pending application is directed at a single invention that materially enhances the quality of the environment. The claims cover a lid that is made out of biodegradable materials but can still snap over and securely attach to a cup. Americans annually use 16 billion paper hot cups and lids. World wide, use of paper hot cups and lids exceeds 50 billion annually.

   Traditionally, such lids were made of materials that were not bio-degradable. Plastic coffee lids are unable to be recycled, meaning they end up in landfills. In addition, many lids are made from polystyrene, a liquid hydrocarbon manufactured from petroleum. If the polystyrene mixes with recycled paper, the recyclable paper becomes contaminated from the polystyrene and also becomes waste.

   As a result, the quality of the environment will be materially improved as lids will not be bio-degradable. Just in the United States, over one million cubic yards of landfill space would be spared if users switched to recyclable coffee lids as described in the pending application. Such a drastic reduction in landfill use is a material benefit to the quality of the environment.

   Further, the switch from a petroleum based coffee lid would also reduce the use of petroleum. The pending lids are manufactured primarily from renewable resources, not non-renewable resources like petroleum. As a result, there will be a material benefit to the quality of the environment by the reduced use of non-renewable resources such as petroleum.

Signature	/W. J. Kramer #46,229/	Date	January 6, 2011
Name (Print/Typed)	William J. Kramer	Registration Number	46,229

***Note**: Signatures of all the inventors or assignees of record of the entire interest or their representative(s) are required in accordance with 37 CFR 1.33 and 11.18. Please see 37 CFR 1.4(d) for the form of the signature. If necessary, submit multiple forms if more than one signature, see below*.*

☐ *Total of 1 forms are submitted.

I hereby certify that this paper (along with any paper referred to as being attached or enclosed) is being transmitted via the Office electronic filing system in accordance with § 1.6(a)(4).

Dated: November 30, 2010 Signature: /W. J. Kramer #46,229/ (William J. Kramer)

UNITED STATES PATENT AND TRADEMARK OFFICE

UNITED STATES DEPARTMENT OF COMMERCE
United States Patent and Trademark Office
Address: COMMISSIONER FOR PATENTS
P.O. Box 1450
Alexandria, Virginia 22313-1450
www.uspto.gov

APPLICATION NO.	FILING DATE	FIRST NAMED INVENTOR	ATTORNEY DOCKET NO.	CONFIRMATION NO.
12/884,306	09/17/2010	Eric Urban	31670/45332	6448

4743 7590 01/10/2011

MARSHALL, GERSTEIN & BORUN LLP
233 SOUTH WACKER DRIVE
6300 WILLIS TOWER
CHICAGO, IL 60606-6357

EXAMINER	
ART UNIT	PAPER NUMBER
3781	

NOTIFICATION DATE	DELIVERY MODE
01/10/2011	ELECTRONIC

Please find below and/or attached an Office communication concerning this application or proceeding.

The time period for reply, if any, is set in the attached communication.

Notice of the Office communication was sent electronically on above-indicated "Notification Date" to the following e-mail address(es):

mgbdocket@marshallip.com

UNITED STATES PATENT AND TRADEMARK OFFICE

Commissioner for Patents
United States Patent and Trademark Office
P.O. Box 1450
Alexandria, VA 22313-1450
www.uspto.gov

MARSHALL, GERSTEIN & BORUN LLP
233 SOUTH WACKER DRIVE
6300 WILLIS TOWER
CHICAGO IL 60606-6357

In re Application of	:	
URBAN, ERIC	:	DECISION ON PETITION
Application No. 12/884,306	:	TO MAKE SPECIAL UNDER
Filed: Sep. 17, 2010	:	THE GREEN TECHNOLOGY
Attorney Docket No. 31670/45332	:	PILOT PROGRAM

This is a decision on the renewed petition under 37 CFR 1.102, filed Jan. 6, 2011, to make the above-identified application special under the pilot program for applications pertaining to Green Technologies as set forth in 74 Federal Register Notice 64666 (December 8, 2009) and amended by 75 Federal Register Notice 28554 (May 21, 2010) and 75 Federal Register Notice 69049 (November 10, 2010).

The petition is **granted.**

If reconsideration of this decision is desired, a petition for reconsideration must be filed within ONE (1) MONTH OR THIRTY (30) DAYS from the mail date of this decision, whichever is longer. No extension of this time limit can be granted under 37 CFR 1.136(a) or (b). The petition for reconsideration should include an exhaustive attempt to provide the lacking item(s) noted below, since, after a decision on the petition for reconsideration, no further reconsideration or review of the matter will be undertaken by the Director.

A grantable petition to make an application special under 37 CFR 1.102 and the pilot program as set forth in 74 FR 64666 must be directed to a nonprovisional application filed under 35 USC 111(a) or be a national stage entry under 35 USC 371, exclusive of any reissue applications.

In order to qualify for special status, the following requirements must be met. 1) The application must have no more than 3 independent claims and no more than 20 total claims. 2) The application must not contain any multiple dependent claims. 3) The petition must state the basis for seeking special status, i.e., the claimed invention either: A) materially enhances the quality of the environment or B) materially contributes to: i) the discovery or development of renewable energy resources, ii) the more efficient utilization and conservation of energy resources, or iii)

greenhouse gas emission reduction. 4) If the disclosure is not clear on its face that the claimed invention materially contributes under category (A) or (B), the petition must be accompanied by a statement by the applicant, assignee, or an attorney/agent registered to practice before the Office explaining how the materiality standard is met. 5) A statement that applicant will agree to make an election without traverse in a telephonic interview if a restriction requirement is made by the examiner. 6) The petition to make special must be filed electronically. 7) The petition must be filed at least one day prior to the date that a first Office Action appears in the Patent Application Information Retrieval (PAIR) system. 8) The petition must be accompanied by a request for early publication in compliance with 37 CFR 1.219 and include the publication fee as set forth in 37 CFR 1.18(d).

The requirement for a fee for consideration of the petition to make special for applications pertaining to Green Technologies has been waived.

The instant petition complies with items 1 – 8 above. Accordingly, the above-identified application has been accorded "special" status.

Telephone inquires concerning this decision should be directed to Henry C. Yuen at 571-272-4856.

This application will be forwarded to the Technology Center Art Unit 3781 for action on the merits commensurate with this decision.

/Henry C. Yuen/

Henry C. Yuen
Quality Assurance Specialist
Technology Center TC 3700

UNITED STATES PATENT AND TRADEMARK OFFICE

UNITED STATES DEPARTMENT OF COMMERCE
United States Patent and Trademark Office
Address: COMMISSIONER FOR PATENTS
P.O. Box 1450
Alexandria, Virginia 22313-1450
www.uspto.gov

APPLICATION NO.	FILING DATE	FIRST NAMED INVENTOR	ATTORNEY DOCKET NO.	CONFIRMATION NO.
12/884,329	09/17/2010	Kenji Yamazaki	26706	6511

23389 7590 08/30/2011

SCULLY SCOTT MURPHY & PRESSER, PC
400 GARDEN CITY PLAZA
SUITE 300
GARDEN CITY, NY 11530

EXAMINER	
ART UNIT	PAPER NUMBER
2482	

MAIL DATE	DELIVERY MODE
08/30/2011	PAPER

Please find below and/or attached an Office communication concerning this application or proceeding.

The time period for reply, if any, is set in the attached communication.

UNITED STATES PATENT AND TRADEMARK OFFICE

MAILED

AUG 30 2011

DIRECTOR OFFICE
TECHNOLOGY CENTER 2400

Commissioner for Patents
United States Patent and Trademark Office
P.O. Box 1450
Alexandria, VA 22313-1450
www.uspto.gov

SCULLY SCOTT MURPHY & PRESSER, PC
400 GARDEN CITY PLAZA
SUITE 300
GARDEN CITY NY 11530

In re Application of: Kenji Yamazaki
Application No. 12884329
Filed: September 17, 2010
For: **ENDOSCOPE APPARATUS**

DECISION ON REQUEST TO PARTICIPATE IN PATENT PROSECUTION HIGHWAY PROGRAM AND PETITION TO MAKE SPECIAL UNDER 37 CFR 1.102(d)

This is a decision on the request to participate in the Patent Prosecution Highway (PPH) program and the petition under 37 CFR 1.102(d), filed August 09, 2011, to make the above-identified application special.

The petition is **GRANTED.**

A grantable request to participate in the PPH program and petition to make special require:

(1) The U.S. application must (1) validly claims priority under 35 U.S.C. 119(a) and 37 CFR 1.55 to one or more corresponding JPO application(s) or to a PCT application that does not contain any priority claim, or (2) is a national stage entry of a PCT application that does not contain any priority claim;

(2) Applicant must submit a copy of the allowable/patentable claim(s) from the JPO application(s) along with an English translation thereof and a statement that the English translation is accurate;

(3) All the claims in the U.S. application must sufficiently correspond or be amended to sufficiently correspond to the allowable/patentable claim(s) in the JPO application(s);

(4) Examination of the U.S. application has not begun;

(5) Applicant must submit a copy of all the office actions from each of the JPO application(s) containing the allowable/patentable claim(s) along with an English translation thereof and a statement that the English translation is accurate;

(6) Applicant must submit an IDS listing the documents cited by the JPO examiner in the JPO office action along with copies of documents except U.S. patents or U.S. patent application publications; and

The request to participate in the PPH program and petition are found to comply with all the above requirements. Accordingly, the above-identified application has been accorded "special" status.

Telephone inquiries concerning this decision should be directed to Chau Nguyen at 571-272-3126

All other inquiries concerning the examination or status of the application is accessible in the PAIR system at http://www.uspto.gov/ebc/index.html.

The application is being forwarded to the examiner for action on the merits commensurate with this decision.

/Chau Nguyen/

_____

Chau Nguyen
Quality Assurance Specialist
Technology Center 2400

UNITED STATES PATENT AND TRADEMARK OFFICE

Commissioner for Patents
United States Patent and Trademark Office
P.O. Box 1450
Alexandria, VA 22313-1450
www.uspto.gov

MASCHOFF GILMORE & ISRAELSEN
1441 W. UTE BLVD., SUITE 100
PARK CITY UT 84098-7633

MAILED

OCT 27 2011

OFFICE OF PETITIONS

In re Application of :
Farr et al. :
Application No. 12/884,363 : ON PETITION
Filed: September 17, 2010
Attorney Docket No. V1031.10003US05 :
:

This is a decision on the petition under 37 CFR 1.102(c)(1), filed October 10, 2011, to make the above-identified application special based on applicant's age as set forth in M.P.E.P. § 708.02, Section IV.

The petition is **GRANTED**.

A grantable petition to make an application special under 37 CFR 1.102(c)(1) and MPEP § 708.02, Section IV: Applicant's Age must be accompanied by evidence showing that at least one of the applicants is 65 years of age, or more, such as a birth certificate or a statement by applicant. No fee is required

The instant petition includes a statement by applicant's attorney that applicant is 65 years of age and a statement from applicant that applicant is 65 years of age. Accordingly, the above-identified application has been accorded "special" status.

Telephone inquiries concerning this decision should be directed to the undersigned at 571-272-7751. All other inquiries concerning either the examination or status of the application should be directed to the Technology Center.

This matter is being referred to the Technology Center Art Unit for 3733 for action on the merits commensurate with this decision.

/Joan Olszewski/
Joan Olszewski
Petitions Examiner
Office of Petitions

UNITED STATES PATENT AND TRADEMARK OFFICE

Commissioner for Patents
United States Patent and Trademark Office
P.O. Box 1450
Alexandria, VA 22313-1450
www.uspto.gov

CANTOR COLBURN LLP
20 CHURCH STREET
22ND FLOOR
HARTFORD CT 06103

MAILED

JAN 30 2012

OFFICE OF PETITIONS

In re Application of :
ELIAS, Ilan :
Application No. 12/884,394 : DECISION ON PETITION
Filed: September 17, 2010 : TO WITHDRAW
Attorney Docket No. **ELS0004US2** : FROM RECORD
:

This is a decision on the Request to Withdraw as attorney or agent of record under 37 C.F.R. § 1.36(b), filed December 29, 2011.

The request is **APPROVED**.

A grantable request to withdraw as attorney/agent of record must be signed by every attorney/agent seeking to withdraw or contain a clear indication that one attorney is signing on behalf of another/others. The Office requires the practitioner(s) requesting withdrawal to certify that he, she, or they have: (1) given reasonable notice to the client, prior to the expiration of the response period, that the practitioner(s) intends to withdraw from employment; (2) delivered to the client or a duly authorized representative of the client all papers and property (including funds) to which the client is entitled; and (3) notified the client of any responses that may be due and the time frame within which the client must respond, pursuant 37 CFR 10.40(c).

The request was signed by Chad A. Dever on behalf of all attorneys of record who are associated with customer No. 23413. All attorneys/agents associated have been withdrawn. Applicant is reminded that there is no attorney of record at this time.

All future correspondence will be directed to the first named inventor Ilan Elias, at the address indicated below.

There is an outstanding Office action mailed October 19, 2011 that requires a reply from the applicant.

Telephone inquiries concerning this decision should be directed to the undersigned at 571-272-4231.

Michelle R. Eason
Paralegal Specialist
Office of Petitions

cc: **ILAN ELIAS, M.D.**
DILLENBURGERSTRASSEE 29A
FRANKFURT, AM MAIN 60439
GERMANY

UNITED STATES PATENT AND TRADEMARK OFFICE

Commissioner for Patents
United States Patent and Trademark Office
P.O. Box 1450
Alexandria, VA 22313-1450
www.uspto.gov

In re Application of
Rabindra N. Das

Application No. 12884421

Filed:

Attorney Docket No. EI-2-10-002

:DECISION ON PETITION TO MAKE SPECIAL
:UNDER 37 CFR 1.102(c)(1)

This is a decision on the electronic petition under 37 CFR 1.102 (c)(1), filed 17-SEP-2010 to make the above-identified application special based on applicant's age as set forth in MPEP § 708.02, Section IV.

The petition is **GRANTED**.

A grantable petition to make an application special under 37 CFR 1.102(c)(1), MPEP § 708.02, Section IV: Applicant's Age must include a statement by applicant or a registered practitioner having evidence that applicant is at least 65 years of age. No fee is required.

Accordingly, the above-identified application has been accorded "special" status and will be taken up for action by the examiner upon the completion of all pre-examination processing.

Telephone inquiries concerning this electronic decision should be directed to the Electronic Business Center at 866-217-9197.

All other inquiries concerning either the examination or status of the application should be directed to the Technology Center.

UNITED STATES PATENT AND TRADEMARK OFFICE

Commissioner for Patents
United States Patent and Trademark Office
P.O. Box 1450
Alexandria, VA 22313-1450
www.uspto.gov

BAKER BOTTS L.L.P.
2001 ROSS AVENUE
SUITE 600
DALLAS TX 75201-2980

MAILED

JUN 03 2011

OFFICE OF PETITIONS

In re Application of :
Saeler :
Application No. 12/884,440 : DECISION GRANTING STATUS
Filed: September 17, 2010 : UNDER 37 CFR 1.47(b)
Attorney Docket No. 076310.0242 :

For: **RAILWAY CAR COUPLER HEAD CONTOUR GAUGE AND METHOD**

This is in response to the petition under 37 CFR 1.47(b), filed April 28, 2011.

The petition is **GRANTED**.

The above-identified application and papers have been reviewed and found in compliance with 37 CFR 1.47(b). This application is hereby accorded Rule 1.47(b) status.

The above-identified application was filed on September 17, 2010, without a properly executed declaration. A Notice to File Missing Parts of Nonprovisional Application was mailed on September 30, 2010, indicating that a proper declaration executed was required as well as a surcharge of $130.00 for the late filing of the same. The instant petition was filed on April 28, 2011, with an extension of time within the fifth month.

By the instant petition and evidentiary documents, petitioner has established that the 37 CFR 1.47(b) applicant has sufficient proprietary interest to proceed with prosecution of the application without the sole inventors.

As provided in Rule 1.47(c), this Office will forward notice of this application's filing to the non-signing inventors at the addresses given in the petition. Notice of the filing of this application will also be published in the Official Gazette.

This application will be forwarded to the Office of Patent Application Processing for further review.

Telephone inquiries concerning this decision should be directed to the undersigned at (571) 272-3222.

/Kenya A. McLaughlin

Kenya A. McLaughlin
Petitions Attorney
Office of Petitions

UNITED STATES PATENT AND TRADEMARK OFFICE

Commissioner for Patents
United States Patent and Trademark Office
P.O. Box 1450
Alexandria, VA 22313-1450
www.uspto.gov

MAILED

JUN 03 2011

OFFICE OF PETITIONS

Kevin S. Saeler
Stoneboro, Mercer Co., Pennsylvania
1222 Hendersonville Road
Stoneboro, PA 16153

In re Application of :

Saeler :

Application No. 12/884,440 : LETTER

Filed: September 17, 2010 :

Attorney Docket No. 076310.0242 :

For: **RAILWAY CAR COUPLER HEAD CONTOUR GAUGE AND METHOD**

Dear Mr. Saeler:

You are named as a joint inventor in the above-identified United States patent application filed under the provisions of 35 U.S.C. 116 (United States Code) and 37 CFR 1.47(b), Rules of Practice in Patent Cases. Should a patent be granted on the application you will be designated therein as a joint inventor.

As a joint inventor, you are entitled to inspect any paper in the file wrapper of the application, order copies of all or any part thereof (at a prepaid cost per 37 CFR 1.19) or make your position of record in the application. Alternatively, you may arrange to do any of the preceding through a registered patent attorney or agent presenting written authorization from you. If you care to join the application, counsel of record (see below) would presumably assist you. Joining in the application would entail the filing of an appropriate oath or declaration by you pursuant to 37 CFR 1.63.

Telephone inquiries regarding this communication should be directed to Petitions Attorney Kenya A. McLaughlin at (571) 272-3222. Requests for information regarding your application should be directed to the File Information Unit at (703) 308-2733. Information regarding how to pay for and order a copy of the application, or a specific paper in the application, should be directed to Certification Division at (703) 308-9726 or 1-800-972-6382 (outside the Washington D.C. area).

/Kenya a. McLaughlin/

Kenya A. McLaughlin
Petitions Attorney
Office of Petitions

BAKER BOTTS L.L.P.
2001 ROSS AVENUE
SUITE 600
DALLAS TX 75201-2980

UNITED STATES PATENT AND TRADEMARK OFFICE

Commissioner for Patents
United States Patent and Trademark Office
P.O. Box 1450
Alexandria, VA 22313-1450
www.uspto.gov

In re Application of
Darrell N. Haun

Application No. 12884450

Filed:

Attorney Docket No. 1654.016

:DECISION ON PETITION TO MAKE SPECIAL
:UNDER 37 CFR 1.102(c)(1)

This is a decision on the electronic petition under 37 CFR 1.102 (c)(1), filed 17-SEP-2010 to make the above-identified application special based on applicant's age as set forth in MPEP § 708.02, Section IV.

The petition is **GRANTED**.

A grantable petition to make an application special under 37 CFR 1.102(c)(1), MPEP § 708.02, Section IV: Applicant's Age must include a statement by applicant or a registered practitioner having evidence that applicant is at least 65 years of age. No fee is required.

Accordingly, the above-identified application has been accorded "special" status and will be taken up for action by the examiner upon the completion of all pre-examination processing.

Telephone inquiries concerning this electronic decision should be directed to the Electronic Business Center at 866-217-9197.

All other inquiries concerning either the examination or status of the application should be directed to the Technology Center.

UNITED STATES PATENT AND TRADEMARK OFFICE

Commissioner for Patents
United States Patent and Trademark Office
P.O. Box 1450
Alexandria, VA 22313-1450
www.uspto.gov

MAILED

NOV 21 2011

OFFICE OF PETITIONS

HINCHLIFFE IP LAW, LLC
C/O CPA GLOBAL
PO BOX 52050
MINNEAPOLIS, MN 55402

In re Application of :
Kim Pallister :
Application No. 12/884,456 : DECISION GRANTING PETITION
Filed: September 17, 2010 : UNDER 37 CFR 1.313(c)(2)
Attorney Docket No. P19893D :

This is a decision on the petition under 37 CFR 1.313(c)(2), filed November 10, 2011, to withdraw the above-identified application from issue after payment of the issue fee.

The petition is **GRANTED**.

The above-identified application is withdrawn from issue for consideration of a submission under 37 CFR 1.114 (request for continued examination). *See* 37 CFR 1.313(c)(2).

Petitioner is advised that the issue fee paid on November 4, 2011 cannot be refunded. If, however, this application is again allowed, petitioner may request that it be applied towards the issue fee required by the new Notice of Allowance.[1]

Telephone inquiries regarding this decision should be directed to undersigned at (571) 272-1642. All other inquiries concerning the examination or status of this application should be directed to the Technology Center.

This application is being referred to Technology Center AU 2624 for processing of the request for continued examination under 37 CFR 1.114 and for consideration of the concurrently filed information disclosure statement.

/AMW/
April M. Wise
Petitions Examiner
Office of Petitions

[1] *The request to apply the issue fee to the new Notice may be satisfied by completing and returning the new Part B – Fee(s) Transmittal Form (along with any balance due at the time of submission). Petitioner is advised that the Issue Fee Transmittal Form must be completed and timely submitted to avoid abandonment of the application.*

IN THE UNITED STATES PATENT AND TRADEMARK OFFICE

First Named Inventor: Brian M. STEURER	)
Confirmation No.: 6788	)
	)
Serial No.: 12/884,469	)
	)
Filing Date: 09-17-2010	)
	)
Atty Docket No.: 241040-1 (US)	)

VIA EFS
Commissioner for Patents
P.O. Box 1450
Alexandria, VA 22313-1450

Statement Concerning the Basis for the Special Status

SIR:

This application relates to energy management, and more particularly to energy management of household consumer appliances. The disclosure finds particular application to changing existing appliances via add-on features or modules, and incorporating new energy saving features and functions into new appliances. (See [0002])

Currently utilities charge a flat rate, but with increasing cost of fuel prices and high energy usage at certain parts of the day, utilities have to buy more energy to supply customers during peak demand. Utility companies have to find ways to temporarily provide for this higher energy use, which comes at great expense to utility companies. Consequently, utilities are charging higher rates during peak demand. If the utility company can communicate that power is in high demand, home appliances, such as ranges that are typically used during peak time (later afternoon), could notify the consumer that demand is high and

reduce peak power usage of the appliance and allow the utility company to shed load. This "demand response" capability in cooking appliances spread over thousands of customers would allow the utility company to shed a significant amount of peak load. (See [0003])

Surface burners are used 2-3 times more often than the oven, and consume about the same peak power as the oven, but over half the amount of the time cycle. The best opportunity to shed power on surface burners is during high settings. At low settings, reducing power can result in undercooked food that may affect food safety, and since surface cooking is attended, the consumer can merely increase the power. High settings are typically initiated to perform non-direct-cooking related activities, such as boiling water. Normal cooking occurs at 30% or less max power on a surface burner, while bringing water to a boil utilizes 100% power. (See [0006])

While electronic surface burner controls can change or limit duty cycles in response to a "high demand", many ranges use electromechanical power switching devices that are not electronic. Additionally, most ranges produced today control surface elements with series (current sensitive) or parallel (voltage sensitive) infinite switches. These devices operate independently of the oven control and do not interact with a microprocessor. This system aims to provide a way to reduce peak and average power with minimal changes to currently produced non-electronically controlled surface cooking elements, in a cost effective manner. By implementing simpler control systems, this system is able to react to either a discrete normal demand or higher demand signal. Therefore,

this system is a simple, low cost method to shed both peak and average power that does not require expensive range control systems. This system may be installed on inexpensive products without adding expensive electronic control devices that require extensive system level software developments, safety critical hardware & and software interactions, etc. (See [0007])

According to one aspect, a system for reducing peak power usage of an electromechanical device is provided. The system includes at least one of an infinite switch and a thermostat and one or more power consuming elements. Each of the power consuming elements comprises at least two separately controllable zones. The system further includes a control in communication with a demand signal module and one or more of the power consuming elements. The control is configured to receive and process a signal from the demand signal module indicative of the current state of an associated utility. The control further includes at least one throw relay that is configured to control the delivery of power to at least one of the separately controllable zones.

According to another aspect, a method for reducing peak power usage of an electromechanical device is provided. The method includes providing a control downstream from an associated infinite switch. The control is configured to receive and process a signal indicative of the current state of an associated utility, the utility state being at least one of a peak demand period and an off-peak demand period. The method further includes providing at least one power consuming element having at least two zones, wherein the power delivery to at least one zone is separately controlled by an associated throw relay, and

receiving and processing a signal by the control. The device is operated in a normal mode during the off-peak demand period, and the device is operated in an energy savings mode during the peak demand period. Finally, the device is returned to normal mode at the conclusion of the peak demand period. (See [0009])

According to yet another embodiment, an electromechanical cooking appliance is provided. The cooking appliance includes a cooking cavity having at least one interior heating element and a cooking surface having one or more surface heating elements, each heating element comprising at least two heating zones. A control is included that is configured to receive and process a signal from an associated demand side management module. The signal has a first state indicative of a utility peak demand period and a second state indicative of a utility off-peak demand period. The control operates the cooking appliance in one of an energy savings mode and a normal operating mode based on the received signal being in the first and second states respectively. The cooking appliance further includes a throw relay configured to control the delivery of power to at least one of said heating zones, wherein during energy savings mode, the control is adapted to open the throw relay, cutting off power delivery to the one or more heating zones and reducing power consumption of the cooking appliance. (See [0010])

The present application reduces power consumption during on-peak hours by reducing the energy demand on the power generation facility, and also enabling the user/consumer to pay less to operate the appliance on an annual

basis. (See [0011]). Therefore, Applicant respectfully submits that Special Status is sought on the basis that the present invention materially contributes to the more efficient utilization and conservation of energy resources.

The undersigned representative may be contacted at the number below to facilitate the resolution of any matters. Please charge any fees that are incurred in connection with this Statement to deposit account no. 09-0470.

Respectfully submitted,

General Electric Company

By : /Allison W. Mages/
Allison W. Mages
Reg. No. 57,275

Dated: February 1, 2012

GE Global Patent Operation
2 Corporate Drive, Suite 648
Shelton, CT 06484
203-944-6730

Doc Code: PET.GREEN
Document Description: Petition for Green Tech Pilot

PTO/SB/420 (03-11)

PETITION TO MAKE SPECIAL UNDER THE GREEN TECHNOLOGY PILOT PROGRAM

Attorney Docket Number: 241040-1 (GECZ 201077US01)	Application Number (if known): 12/884,469	Filing date: 09-17-2010

First Named Inventor: Brian M. STEURER

Title: LOAD SHEDDING FOR SURFACE HEATING UNITS ON ELECTROMECHANICALLY CONTROLLED COOKING APPLIANCES

APPLICANT HEREBY REQUESTS TO PARTICIPATE IN THE GREEN TECHNOLOGY PILOT PROGRAM FOR THE ABOVE-IDENTIFIED APPLICATION. See Instruction Sheet on page 2.

This petition must be timely filed electronically using the USPTO electronic filing system, EFS-Web.

1. By filing this petition:

   Applicant is requesting early publication: Applicant hereby requests early publication under 37 CFR 1.219 and the publication fee set forth in 37 CFR 1.18(d) accompanies this request.

2. By filing this petition: applicant is agreeing to make an election without traverse in a telephonic interview and elect an invention that meets the eligibility requirements for the Green Technology Pilot Program, if the Office determines that the claims are not obviously directed to a single invention. See Instruction Sheet.

3. This request is accompanied by statements of special status for the eligibility requirement.

4. The application contains no more than three (3) independent claims and twenty (20) total claims.

5. The application does not contain any multiple dependent claims.

6. Other attachments: Statement Concerning the Basis for the Special Status

Signature /Allison W. Mages/	Date February 1, 2012
Name (Print/Typed) Allison W. Mages	Registration Number 57,275

Note: Signatures of all the inventors or assignees of record of the entire interest or their representative(s) are required in accordance with 37 CFR 1.33 and 11.18. Please see 37 CFR 1.4(d) for the form of the signature. If necessary, submit multiple forms for more than one signature, see below.*

☐ *Total of _____ forms are submitted.

If you need assistance in completing the form, call 1-800-PTO-9199 and select option 2.

UNITED STATES PATENT AND TRADEMARK OFFICE

UNITED STATES DEPARTMENT OF COMMERCE
United States Patent and Trademark Office
Address: COMMISSIONER FOR PATENTS
P.O. Box 1450
Alexandria, Virginia 22313-1450
www.uspto.gov

APPLICATION NO.	FILING DATE	FIRST NAMED INVENTOR	ATTORNEY DOCKET NO.	CONFIRMATION NO.
12/884,469	09/17/2010	Brian M. Steurer	241040 (GECZ 201077US01)	6788

27885 7590 02/09/2012

FAY SHARPE LLP
1228 Euclid Avenue, 5th Floor
The Halle Building
Cleveland, OH 44115

EXAMINER	
YUEN, HENRY C	
ART UNIT	**PAPER NUMBER**
3742	
MAIL DATE	**DELIVERY MODE**
02/09/2012	PAPER

Please find below and/or attached an Office communication concerning this application or proceeding.

The time period for reply, if any, is set in the attached communication.

UNITED STATES PATENT AND TRADEMARK OFFICE

Commissioner for Patents
United States Patent and Trademark Office
P.O. Box 1450
Alexandria, VA 22313-1450
www.uspto.gov

FAY SHARPE LLP
1228 Euclid Avenue, 5th Floor
The Halle Building
Cleveland OH 44115

In re Application of
STEURER, BRIAN M. :
Application No. 12/884,469 :
Filed: Sep. 17, 2010 :
Attorney Docket No. 241040 (GECZ 201077US01) :

DECISION ON PETITION
TO MAKE SPECIAL UNDER
THE GREEN TECHNOLOGY
PILOT PROGRAM

This is a decision on the petition under 37 CFR 1.102, filed Feb. 1, 2012 to make the above-identified application special under the pilot program for applications pertaining to Green Technologies as set forth in 74 Federal Register Notice 64666 (December 8, 2009) and amended by 75 Federal Register Notice 28554 (May 21, 2010) and 75 Federal Register Notice 69049 (November 10, 2010).

The petition is dismissed.

A grantable petition to make an application special under 37 CFR 1.102 and the pilot program as set forth in 74 FR 64666 must be directed to a nonprovisional application filed under 35 USC 111(a) or be a national stage entry under 35 USC 371, exclusive of any reissue applications.

If reconsideration of this decision is desired, a petition for reconsideration must be filed within ONE (1) MONTH OR THIRTY (30) DAYS from the mail date of this decision, whichever is longer. No extension of this time limit can be granted under 37 CFR 1.136(a) or (b). The petition for reconsideration should include an exhaustive attempt to provide the lacking item(s) noted below, since, after a decision on the petition for reconsideration, no further reconsideration or review of the matter will be undertaken by the Director.

In order to qualify for special status, the following requirements must be met. 1) The application must have no more than 3 independent claims and no more than 20 total claims. 2) The application must not contain any multiple dependent claims. 3) The petition must state the basis for seeking special status, i.e., the claimed invention either: A) materially enhances the quality of

the environment or B) materially contributes to: i) the discovery or development of renewable energy resources, ii) the more efficient utilization and conservation of energy resources, or iii) greenhouse gas emission reduction. 4) If the disclosure is not clear on its face that the claimed invention materially contributes under category (A) or (B), the petition must be accompanied by a statement by the applicant, assignee, or an attorney/agent registered to practice before the Office explaining how the materiality standard is met. 5) A statement that applicant will agree to make an election without traverse in a telephonic interview if a restriction requirement is made by the examiner. 6) The petition to make special must be filed electronically. 7) The petition must be filed at least one day prior to the date that a first Office Action appears in the Patent Application Information Retrieval (PAIR) system. 8) The petition must be accompanied by a request for early publication in compliance with 37 CFR 1.219 and include the publication fee as set forth in 37 CFR 1.18(d). The requirement for a fee for consideration of the petition to make special for applications pertaining to Green Technologies has been waived.

In regard to item 4, petitioner should note that the instant petition includes a statement identifying the basis for the special status (i.e., whether the instant invention (1) materially enhances the quality of the environment or materially contributes to (2) development of renewable energy resources or energy conservation, or (3) greenhouse gas reduction) as required by sections II and III of the notice. However, as stated in the notice, applicant must also provide a statement pertaining to the materiality standard if the application disclosure is not clear on its face as to the materiality of the basis for the special status of the invention. This petition lacks such a statement and it is not agreed that the application on its face meets that materiality standard. Petitioner states that the claimed invention relates to green technology. This is not convincing. It is not clear how the claimed shifting of power consumption from peal period to non-peak period will provide and enhance the quality of the environment or contribute to development of renewable energy resources or energy conservation or greenhouse gas reduction. There is no connection between the claimed power consumption shift with respect to the green technology.

Telephone inquires concerning this decision should be directed to Henry C. Yuen at 571-272-4856. This application will be forwarded to the Technology Center Art Unit 3742 for action on the merits commensurate with this decision.

/Henry C. Yuen/

Henry C. Yuen
Quality Assurance Specialist
Technology Center TC 3700

IN THE UNITED STATES PATENT AND TRADEMARK OFFICE

First Named Inventor: Brian M. STEURER	)
Confirmation No.: 6788	)
	)
Serial No.: 12/884,469	)
	)
Filing Date: 09-17-2010	)
	)
Atty Docket No.: 241040-1 (GECZ 201077US01)	)

Commissioner for Patents
P.O. Box 1450
Alexandria, VA 22313-1450

Request for Reconsideration

SIR:

This is responsive to the Decision on Petition, dated as mailed 9 February 2012, in the above-referenced application.

Applicant respectfully requests reconsideration of Applicant's Petition to Make Special on the basis that the present invention materially contributes to more efficient utilization of and conservation of energy resources.

The Decision to Make Special Under the Green Technology Pilot Program (hereinafter "the Decision") states that it is not agreed that the application on its face meets the materiality standard. The Decision states that Applicant's statement that the claimed invention relates to green technology is not convincing. The Decision states that it is not clear how the claimed shifting of power consumption from peak period to non-peak period will provide and enhance the quality of the environment or contribute to the development of renewable energy resources or energy conservation or greenhouse gas reduction. The Decision states that there is no connection between the claimed power consumption shift and green technology. Applicant does not agree with the comments made in the Decision.

Applicant respectfully submits that the present invention relates energy management, and more particularly to energy management of household consumer appliances. The disclosure finds particular application to changing existing appliances via add-on features or modules, and incorporating new energy saving features and functions into new appliances. (see at least paragraph [0002]).

Smart technology generally relates to a class of technology that uses computer-based remote control and automation. These systems are made possible by two-way communication technology and computer processing and offer many benefits to consumers; mostly seen in big improvements in energy efficiency. Amongst several benefits, smart energy technologies allow for greater informational awareness and control of energy flow. This informational awareness allows consumers to interface with their energy consumption, providing new levels of detail on how, and how much, electricity is being consumed. Smart energy generally provides consumers a greater ability to adapt to changing market conditions for greater energy efficiency. ("Smart Grid", Office of Electricity Delivery & Energy Reliability. 2011. Web. 28 July 2011).

Currently utilities charge a flat rate, but with increasing cost of fuel prices and high energy usage at certain parts of the day, utilities have to buy more energy to supply customers during peak demand. Utility companies have to find ways to temporarily provide for this higher energy use, which comes at great expense to utility companies. Consequently, utilities are charging higher rates during peak demand. If the utility company can communicate that power is in high demand, home appliances, such as ranges that are typically used during

peak time (later afternoon), could notify the consumer that demand is high and reduce peak power usage of the appliance and allow the utility company to shed load. This "demand response" capability in cooking appliances spread over thousands of customers would allow the utility company to shed a significant amount of peak load. (see at least paragraph [0003]).

One proposed third party solution is to provide a system where a control module "switches" the actual energy supply to the appliance or control unit on and off. However, there is no active control beyond the mere on/off switching. It is believed that others in the industry cease some operations in a refrigerator during on-peak time. (see at least paragraph [0004]).

There are also currently different methods used to determine when variable electricity-pricing schemes go into effect. There are phone lines, schedules, and wireless signals sent by the electrical company. One difficulty is that no peak shaving method for an appliance such as a refrigerator will provide a maximal benefit. Further, different electrical companies use different methods of communicating periods of high electrical demand to their consumers. Other electrical companies simply have rate schedules for different times of day. (see at least paragraph [0005]).

Surface burners are used 2-3 times more often than the oven, and consume about the same peak power as the oven, but over half the amount of the time cycle. The best opportunity to shed power on surface burners is during high settings. At low settings, reducing power can result in undercooked food that may affect food safety, and since surface cooking is attended, the consumer

can merely increase the power. High settings are typically initiated to perform non-direct-cooking related activities, such as boiling water. Normal cooking occurs at 30% or less max power on a surface burner, while bringing water to a boil utilizes 100% power. (see at least paragraph [0006]).

While electronic surface burner controls can change or limit duty cycles in response to a "high demand", many ranges use electromechanical power switching devices that are not electronic. Additionally, most ranges produced today control surface elements with series (current sensitive) or parallel (voltage sensitive) infinite switches. These devices operate independently of the oven control and do not interact with a microprocessor. This system aims to provide a way to reduce peak and average power with minimal changes to currently produced non-electronically controlled surface cooking elements, in a cost effective manner. By implementing simpler control systems, this system is able to react to either a discrete normal demand or higher demand signal. Therefore, this system is a simple, low cost method to shed both peak and average power that does not require expensive range control systems. This system may be installed on inexpensive products without adding expensive electronic control devices that require extensive system level software developments, safety critical hardware & and software interactions, etc. (see at least paragraph [0007]).

Embodiments of the present invention reduce power consumption during on-peak hours by reducing the energy demand on the power generation facility, and also enabling the user/consumer to pay less to operate the appliance on an annual basis. Advantages of the present disclosure relate to providing heating

elements with multiple heating zones, such that the duty cycle of at least one zone is separately controlled. This will allow power to cut off from only a portion of a heating element, thereby reducing the consumption of peak power and/or average power over a specific cycle. (see at least paragraphs [0011]-[0012]).

The embodiments disclosed in the present application reduce power consumption during on-peak hours. Amongst several benefits, embodiments of the present invention allow for greater informational awareness and control of energy flow, which has been shown to encourage reductions in energy consumption, and results in greater energy efficiency on the part of consumers. As such, the present invention promotes the more efficient utilization of and conservation of energy.

The undersigned attorney may be contacted at the number below to facilitate the resolution of any matters. Please charge any fees that are incurred in connection with this Statement to deposit account no. 09-0470.

Respectfully submitted,

General Electric Company

By : /Allison W Mages/
Allison Weiner Mages
Reg. No. 57,275

Dated: February 23, 2012

GE Global Patent Operation
2 Corporate Drive, Suite 648
Shelton, CT 06484
203-944-6730

UNITED STATES PATENT AND TRADEMARK OFFICE

UNITED STATES DEPARTMENT OF COMMERCE
United States Patent and Trademark Office
Address: COMMISSIONER FOR PATENTS
P.O. Box 1450
Alexandria, Virginia 22313-1450
www.uspto.gov

APPLICATION NO.	FILING DATE	FIRST NAMED INVENTOR	ATTORNEY DOCKET NO.	CONFIRMATION NO.
12/884,469	09/17/2010	Brian M. Steurer	241040 (GECZ 201077US01)	6788

27885 7590 03/05/2012

FAY SHARPE LLP
1228 Euclid Avenue, 5th Floor
The Halle Building
Cleveland, OH 44115

EXAMINER	
HOANG, TU BA	

ART UNIT	PAPER NUMBER
3742	

MAIL DATE	DELIVERY MODE
03/05/2012	PAPER

Please find below and/or attached an Office communication concerning this application or proceeding.

The time period for reply, if any, is set in the attached communication.

UNITED STATES PATENT AND TRADEMARK OFFICE

Commissioner for Patents
United States Patent and Trademark Office
P.O. Box 1450
Alexandria, VA 22313-1450
www.uspto.gov

FAY SHARPE LLP
1228 Euclid Avenue, 5th Floor
The Halle Building
Cleveland OH 44115

MAR 05 2012

In re Application of :
Brian M. Steurer :
Application No. 12/884,469 :
Filed: September 17, 2010 :
Attorney Docket No. 241040 (GECZ 201077US01) :

DECISION ON PETITION
TO MAKE SPECIAL UNDER
THE GREEN TECHNOLOGY
PILOT PROGRAM

This is a decision on the petition under 37 CFR 1.102, filed February 23, 2012, to make the above-identified application special under the pilot program for applications pertaining to Green Technologies as set forth in 74 Federal Register Notice 64666 (December 8, 2009) and amended by 75 Federal Register Notice 28554 (May 21, 2010), 75 Federal Register Notice 69049 (November 10, 2010) and 76 Federal Register Notice 77979 (December 15, 2011).

The petition is **GRANTED**.

A grantable petition to make an application special under 37 CFR 1.102 and the pilot program as set forth in 74 FR 64666 must be directed to a nonprovisional application filed under 35 USC 111(a) or be a national stage entry under 35 USC 371, exclusive of any reissue applications.

In order to qualify for special status, the following requirements must be met. 1) The application must have no more than 3 independent claims and no more than 20 total claims. 2) The application must not contain any multiple dependent claims. 3) The petition must state the basis for seeking special status, i.e., the claimed invention either: A) materially enhances the quality of the environment or B) materially contributes to: i) the discovery or development of renewable energy resources, ii) the more efficient utilization and conservation of energy resources, or iii) greenhouse gas emission reduction. 4) If the disclosure is not clear on its face that the claimed invention materially contributes under category (A) or (B), the petition must be accompanied by a statement by the applicant, assignee, or an attorney/agent registered to practice before the Office explaining how the materiality standard is met. 5) A statement that applicant will agree to make an election without traverse in a telephonic interview if a restriction requirement is made by the examiner. 6) The petition to make special must be filed electronically. 7) The petition must be filed at least one day prior to the date that a first Office Action appears in the Patent Application Information Retrieval (PAIR) system. 8) The petition must be accompanied by a request for early publication in compliance with 37 CFR 1.219 and include the publication fee as set forth in 37 CFR 1.18(d).

The requirement for a fee for consideration of the petition to make special for applications pertaining to Green Technologies has been waived.

The instant petition complies with items 1 – 8 above. Accordingly, the above-identified application has been accorded "special" status.

Telephone inquires concerning this decision should be directed to Blaine Copenheaver at 571-272-1156.

The application is being forwarded to the examiner for action on the merits commensurate with this decision.

/Blaine Copenheaver/

Blaine Copenheaver
Quality Assurance Specialist
Technology Center 1700

UNITED STATES PATENT AND TRADEMARK OFFICE

Commissioner for Patents
United States Patent and Trademark Office
P.O. Box 1450
Alexandria, VA 22313-1450
www.uspto.gov

ALSTON & BIRD LLP
BANK OF AMERICA PLAZA
101 SOUTH TRYON STREET, SUITE 4000
CHARLOTTE NC 28280-4000

MAILED

MAY 02 2011

OFFICE OF PETITIONS

In re Application of	:	
Dror Irge	:	
Application No. 12/884,475	:	DECISION ON PETITION
Filed: September 17, 2010	:	TO MAKE SPECIAL UNDER
Attorney Docket No. 056286/395835	:	37 CFR 1.102(c)(1)
	:	

This is a decision on the petition under 37 CFR 1.102(c)(1), filed March 1, 2011, to make the above-identified application special based on applicant's age as set forth in M.P.E.P. § 708.02, Section IV.

The petition is **GRANTED**.

A grantable petition to make an application special under 37 CFR 1.102(c)(1) and MPEP § 708.02, Section IV: Applicant's Age must be accompanied by evidence showing that at least one of the applicants is 65 years of age, or more, such as a birth certificate or a statement by applicant. No fee is required

The instant petition includes an affidavit by inventor Dror Irge and a photocopy of driver's license, attesting to his/her age. The above-identified application has been accorded "special" status.

Telephone inquiries concerning this decision should be directed to Kimberly Inabinet at 571-272-4618.

All other inquiries concerning either the examination or status of the application should be directed to the Technology Center.

The application is being forwarded to the Technology Center Art Unit 3769 for action on the merits commensurate with this decision.

/Kimberly Inabinet/

Kimberly Inabinet
Petitions Examiner
Office of Petitions

UNITED STATES PATENT AND TRADEMARK OFFICE

UNITED STATES DEPARTMENT OF COMMERCE
United States Patent and Trademark Office
Address: COMMISSIONER FOR PATENTS
P.O. Box 1450
Alexandria, Virginia 22313-1450
www.uspto.gov

APPLICATION NO.	FILING DATE	FIRST NAMED INVENTOR	ATTORNEY DOCKET NO.	CONFIRMATION NO.
12/884,523	09/17/2010	Steven M. Menzies	PL090127USNP	6890

57572 7590 02/01/2011

MARK S. NOWOTARSKI
30 GLEN TERRACE
STAMFORD, CT 06906

EXAMINER	
KRAMER, JAMES A	

ART UNIT	PAPER NUMBER
3693	

NOTIFICATION DATE	DELIVERY MODE
02/01/2011	ELECTRONIC

Please find below and/or attached an Office communication concerning this application or proceeding.

The time period for reply, if any, is set in the attached communication.

Notice of the Office communication was sent electronically on above-indicated "Notification Date" to the following e-mail address(es):

MNOWOTARSKI@MARKETSANDPATENTS.COM
mark.nowotarski@gmail.com

UNITED STATES PATENT AND TRADEMARK OFFICE

Commissioner for Patents
United States Patent and Trademark Office
P.O. Box 1450
Alexandria, VA 22313-1450
www.uspto.gov

JAN 3 1 2011

MARK S. NOWOTARSKI
30 GLEN TERRACE
STAMFORD CT 06906

In re application of:
MENZIES, Steven M., et al.
Application No.: 12/884,523
Filed: September 17, 2010
For: HOME RESALE PRICE PROTECTION PLAN

: **DECISION ON PETITION**
: **TO MAKE SPECIAL FOR**
: **NEW APPLICATION**
: **UNDER 37 CFR 1.102**

This is a decision on the petition filed on September 17, 2010 to make the above-identified application special for accelerated examination procedure under 37 C.F.R. § 1.102(d).

The petition to make the application special is **GRANTED**.

The application is eligible for accelerated examination and the petition complies with the conditions for granting the application special status pursuant to the "Change to Practice for Petitions in Patent Applications to Make Special and for Accelerated Examination" published June 26, 2006, in the Federal Register. (71 Fed. Reg. 36323).

The prosecution of the instant application will be conducted expeditiously according to the following guidelines.

1. The application will be docketed to an examiner and taken up for action within two weeks of the date of this decision.

2. Restriction Practice:
If the examiner determines that the claims are not directed to a single invention, a telephone request to elect one single invention will be made pursuant to MPEP 812.01. As a prerequisite to the grant of this petition, the applicant has agreed to make an oral election, by telephone, without traverse. If the applicant refuses to make an election without traverse, or the examiner cannot reach the applicant after a reasonable effort, the examiner will treat the

first claimed invention (invention defined by claim 1) as having being constructively elected without traverse for examination.

3. Office action:
If it is determined that, after appropriate consultation, there is a potential rejection or any other issue to be addressed, the examiner will telephone the applicant and arrange an interview to discuss and resolve the issue. An Office action, other than a Notice of Allowance and Fee(s) Due (Notice of Allowance), will not be issued unless either: 1) an interview was conducted but did not result in agreed to action that places the application in condition for allowance, or, 2) a determination is made that an interview would be unlikely to result in the application being placed in condition for allowance, and 3) an internal conference has been held to review any rejection of any claim.

4. Time for Reply:
An Office action other than a Notice of Allowance or a final Office action will set a shortened statutory period of one month or thirty days, whichever is longer, for reply with no extension of time available under 37 CFR 1.136(a). Failure to timely file a reply within this non-extendible period for reply will result in the abandonment of the application.

5. Reply by Applicant:
A timely reply to an Office action other than the Notice of Allowance must be submitted electronically via EFS or EFS-web and limited to addressing the rejections, objections and requirement made. Any amendment that attempts to: 1) add claims which would result in more than three pending independent claims or more than twenty pending total claims; 2) present claims not encompassed by the pre-examination search or an updated accelerated examination support document; or 3) present claims that are directed to a non-elected invention or an invention other than that previously claimed and examined in the application, will be treated as not fully responsive and will not be entered.

   For any amendment to the claims (including any new claim) that is not encompassed by the accelerated examination support document, applicant must provide an updated accelerated examination support document that encompasses the amended or new claims at the time of filing of the amendment.

   To proceed expeditiously with the examination, it is recommended that a reply with amendments made to any claim or with any new claim being added be accompanied by an updated accelerated

examination support document or a statement explaining how the amended or new claim is supported by the original accelerated examination support document.

6. Information Disclosure Statement (IDS):
   Any IDS filed during prosecution must be submitted electronically via EFS or EFS-web, accompanied by an updated accelerated examination support document, and be in compliance with 37 CFR 1.97 and 1.98.

7. Post-Allowance Processing:
   To expedite processing of the allowed application into a patent, the applicant must: 1) pay the required fees within one month of the date of the Notice of Allowance, and 2) not file any post allowance papers not required by the Office. In no event may the issue fee be paid and accepted later than three months from the date of the Notice of Allowance.

8. After-Final and Appeal Procedures:
   To expedite prosecution, after receiving the final Office action, applicant must: 1) promptly file a notice of appeal, an appeal brief and appeal fees; and 2) not request a pre-appeal brief conference.

   Any amendment, affidavit or other evidence filed after final Office action must comply with applicable rules and the requirements outlined in numbered paragraphs 5 and 6 above.

   On appeal, the application will proceed according to normal appeal procedures. After appeal, the application will again be treated special.

9. Proceedings Outside the Normal Examination Process:
   If the application becomes involved in a proceeding that is outside the normal examination process (e.g., a secrecy order, national security review, interference proceeding, petitions under 37 CFR 1.181, 182 or 183), the application will be treated special before and after such proceeding.

10. Final Disposition:
    The twelve month goal of this accelerated examination procedure ends with a final disposition. The mailing of a final Office action, a Notice of Allowance, the filing of a Notice of Appeal, or the filing of a Request for Continued Examination (RCE) is the final disposition.

    If, during prosecution, a paper is not filed electronically using EFS-web, a reply is filed but is not fully responsive, the application is

involved in an appeal, or a proceeding outside normal examination process, the application will still be examined expeditiously, however, the final disposition may occur more than twelve months from the filing of the application.

Any inquiry regarding this decision should be directed to Robert Weinhardt, Business Practice Specialist, at (571) 272-6633.

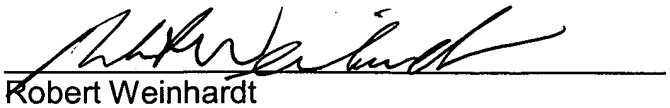

Robert Weinhardt
Business Practice Specialist
Technology Center 3600

RW/1/29/11

UNITED STATES PATENT AND TRADEMARK OFFICE

UNITED STATES DEPARTMENT OF COMMERCE
United States Patent and Trademark Office
Address: COMMISSIONER FOR PATENTS
P.O. Box 1450
Alexandria, Virginia 22313-1450
www.uspto.gov

APPLICATION NO.	FILING DATE	FIRST NAMED INVENTOR	ATTORNEY DOCKET NO.	CONFIRMATION NO.
12/884,552	09/17/2010	Takashi Ouchi	360831US8CONTTK	6947

22850 7590 11/24/2010

OBLON, SPIVAK, MCCLELLAND MAIER & NEUSTADT, L.L.P.
1940 DUKE STREET
ALEXANDRIA, VA 22314

EXAMINER	
ART UNIT	PAPER NUMBER
1741	

NOTIFICATION DATE	DELIVERY MODE
11/24/2010	ELECTRONIC

Please find below and/or attached an Office communication concerning this application or proceeding.

The time period for reply, if any, is set in the attached communication.

Notice of the Office communication was sent electronically on above-indicated "Notification Date" to the following e-mail address(es):

patentdocket@oblon.com
oblonpat@oblon.com
jgardner@oblon.com

UNITED STATES PATENT AND TRADEMARK OFFICE

Commissioner for Patents
United States Patent and Trademark Office
P.O. Box 1450
Alexandria, VA 22313-1450
www.uspto.gov

CST

November 23, 2010

In re application of	:	DECISION ON REQUEST TO
Takashi Ouchi et al	:	PARTICIPATE IN PATENT
Serial No. 12/884,552	:	PROSECUTION HIGHWAY
Filed: September 17, 2010	:	PROGRAM AND
For: PAPERMAKING FELT	:	PETITION TO MAKE SPECIAL
	:	UNDER 37 CFR 1.102(a)

This is a decision on the request to participate in the Patent Prosecution Highway (PPH) program filed September 17, 2010.

The request and petition are **GRANTED**.

A grantable request to participate in the PPH program and petition to make special require:

(1) The U.S. application must validly claim priority under 35 U.S.C. 119(a) to one or more applications filed in the JPO, note where the JPO application with similar claims is not the same application from which the U.S. application claims priority that the applicant must identify the relationship between the JPO application with similar claims and the JPO priority application;

(2) Applicant must submit a copy of:
a. The allowable/patentable claim(s) from the JPO application(s) or if a copy of the allowable/patentable claims is available via the Dossier Access System (DAS) applicant may request the USPTO to obtain a copy from DAS; however, if the USPTO is unable to obtain a copy from the DAS, the applicant will be required to submit a copy;
b. An English translation of the allowable/ patentable claim(s), if applicable; and
c. A statement that the English translation is accurate, if applicable;

(3) Applicant must:
a. Ensure all the claims in the U.S. application must sufficiently correspond or be amended to sufficiently correspond to the allowable/patentable claim(s) in the JPO application(s); and
b. Submit a claims correspondence table in English

(4) Examination of the U.S. application has not begun;

(5) Applicant must submit:

a. Documentation of prior office action:
   i. a copy of the office action(s) just prior to the "Decision to Grant a Patent" from each of the JPO application(s) containing the allowable/patentable claims(s) or
   ii. if the allowable/patentable claim(s) are from "Notification of Reasons for Refusal" then the Notification of Reasons for Refusal or
   iii. if the JPO application is a first action allowance then no office action from the JPO is necessary should be indicated on the request/petition form: Further, if a copy of the documents from a or b is available via the Dossier Access System (DAS), applicant may request the USPO obtain a copy from the DAS; however, if the USPTO is unable to obtain a copy of the DAS, the applicant will be required to submit a copy;
b. An English language translation of the JPO Office action from (5)(a)(i)-(ii) above if applicable; and
c. A statement that the English translation is accurate; and

(6) Applicant must submit:

a. An IDS listing the documents cited by the JPO examiner in the JPO office action (unless already submitted in this application)
b. Copies of documents except U.S. patents or U.S. patent application publications (unless already submitted in this application).

The request to participate in the PPH program and petition comply with the above requirements. Accordingly, the above-identified application has been accorded "special" status.

The application is being forwarded to the examiner for action on the merits commensurate with this decision.

Any inquiry regarding this decision should be directed to Christine Tierney, Quality Assurance Specialist, at (571) 272-1055.

All other inquiries concerning the examination or status of the application is accessible in the PAIR system at http://www.uspto.gov/ebc/index.html.

/Christine Tierney/

Christine Tierney
Quality Assurance Specialist
Technology Center 1700

IN THE UNITED STATES PATENT AND TRADEMARK OFFICE

First Named Inventor: Edward Lee MCGRATH	)
Confirmation No.: 6970	)
	)
Serial No.: 12/884,565	)
	)
Filing Date: September 17, 2010	)
	)
Atty Docket No.: 24621-1	)

Commissioner for Patents
P.O. Box 1450
Alexandria, VA 22313-1450

Statement Concerning the Basis for the Special Status

SIR:

Applicant respectfully submits that Special Status is sought on the basis that the present invention materially contributes to the development of renewable energy resources or energy conservation.

The undersigned attorney may be contacted at the number below to facilitate the resolution of any matters. Please charge any fees that are incurred in connection with this Statement to deposit account no. 09-0470.

Respectfully submitted,

General Electric Company

By : /Douglas D. Zhang/
Douglas D. Zhang
Reg. No. 37,985

Dated: December 29, 2010

GE Global Patent Operation
2 Corporate Drive, Suite 648
Shelton, CT 06484
203-944-6755

Doc Code: PET.GREEN
Document Description: Petition for Green Tech Pilot

PTO/SB/420 (11-10)
Approved for use through 01/31/2011. OMB 0651-0062
U.S. Patent and Trademark Office: U. S. DEPARTMENT OF COMMERCE
Under the Paperwork Reduction Act of 1995, no persons are required to respond to a collection of information unless it displays a valid OMB control number.

PETITION TO MAKE SPECIAL UNDER THE GREEN TECHNOLOGY PILOT PROGRAM

Attorney Docket Number: 246217-1	Application Number (if known): 12/884,565	Filing date: September 17, 2010
First Named Inventor: Edward Lee MCGRATH		
Title: WIND TURBINE ROTOR BLADE WITH ACTUATABLE AIRFOIL PASSAGES		

APPLICANT HEREBY REQUESTS TO PARTICIPATE IN THE GREEN TECHNOLOGY PILOT PROGRAM FOR THE ABOVE-IDENTIFIED APPLICATION. See Instruction Sheet on page 2.

This petition must be timely filed electronically using the USPTO electronic filing system, EFS-Web.

1. By filing this petition:

   Applicant is requesting early publication: Applicant hereby requests early publication under 37 CFR 1.219 and the publication fee set forth in 37 CFR 1.18(d) accompanies this request.

2. By filing this petition: applicant is agreeing to make an election without traverse in a telephonic interview and elect an invention that meets the eligibility requirements for the Green Technology Pilot Program, if the Office determines that the claims are not obviously directed to a single invention. See Instruction Sheet.

3. This request is accompanied by statements of special status for the eligibility requirement.

4. The application contains no more than three (3) independent claims and twenty (20) total claims.

5. The application does not contain any multiple dependent claims.

6. Other attachments: Statement Concerning the Basis for the Special Status

Signature /Douglas D. Zhang/	Date December 29, 2010
Name (Print/Typed) Douglas D. Zhang	Registration Number 37,985

Note: *Signatures of all the inventors or assignees of record of the entire interest or their representative(s) are required in accordance with 37 CFR 1.33 and 11.18. Please see 37 CFR 1.4(d) for the form of the signature. If necessary, submit multiple forms for more than one signature, see below*.*

☐ *Total of ..... forms are submitted.

The information is required to obtain or retain a benefit by the public which is to file (and by the USPTO to process) an application. Confidentiality is governed by 35 U.S.C. 122 and 37 CFR 1.11 and 1.14. This collection is estimated to take 12 hours to complete, including gathering, preparing, and submitting the completed application form to the USPTO. Time will vary depending upon the individual case. Any comments on the amount of time you require to complete this form and/or suggestions for reducing this burden, should be sent to the Chief Information Officer, U.S. Patent and Trademark Office, U.S. Department of Commerce, P.O. Box 1450, Alexandria, VA 22313-1450. DO NOT SEND FEES OR COMPLETED FORMS TO THIS ADDRESS. **SEND TO: Commissioner for Patents, P.O. Box 1450, Alexandria, VA 22313-1450.**

If you need assistance in completing the form, call 1-800-PTO-9199 and select option 2.

Privacy Act Statement

The **Privacy Act of 1974 (P.L. 93-579)** requires that you be given certain information in connection with your submission of the attached form related to a patent application or patent. Accordingly, pursuant to the requirements of the Act, please be advised that: (1) the general authority for the collection of this information is 35 U.S.C. 2(b)(2); (2) furnishing of the information solicited is voluntary; and (3) the principal purpose for which the information is used by the U.S. Patent and Trademark Office is to process and/or examine your submission related to a patent application or patent. If you do not furnish the requested information, the U.S. Patent and Trademark Office may not be able to process and/or examine your submission, which may result in termination of proceedings or abandonment of the application or expiration of the patent.

The information provided by you in this form will be subject to the following routine uses:

1. The information on this form will be treated confidentially to the extent allowed under the Freedom of Information Act (5 U.S.C. 552) and the Privacy Act (5 U.S.C 552a). Records from this system of records may be disclosed to the Department of Justice to determine whether disclosure of these records is required by the Freedom of Information Act.
2. A record from this system of records may be disclosed, as a routine use, in the course of presenting evidence to a court, magistrate, or administrative tribunal, including disclosures to opposing counsel in the course of settlement negotiations.
3. A record in this system of records may be disclosed, as a routine use, to a Member of Congress submitting a request involving an individual, to whom the record pertains, when the individual has requested assistance from the Member with respect to the subject matter of the record.
4. A record in this system of records may be disclosed, as a routine use, to a contractor of the Agency having need for the information in order to perform a contract. Recipients of information shall be required to comply with the requirements of the Privacy Act of 1974, as amended, pursuant to 5 U.S.C. 552a(m).
5. A record related to an International Application filed under the Patent Cooperation Treaty in this system of records may be disclosed, as a routine use, to the International Bureau of the World Intellectual Property Organization, pursuant to the Patent Cooperation Treaty.
6. A record in this system of records may be disclosed, as a routine use, to another federal agency for purposes of National Security review (35 U.S.C. 181) and for review pursuant to the Atomic Energy Act (42 U.S.C. 218(c)).
7. A record from this system of records may be disclosed, as a routine use, to the Administrator, General Services, or his/her designee, during an inspection of records conducted by GSA as part of that agency's responsibility to recommend improvements in records management practices and programs, under authority of 44 U.S.C. 2904 and 2906. Such disclosure shall be made in accordance with the GSA regulations governing inspection of records for this purpose, and any other relevant (*i.e.*, GSA or Commerce) directive. Such disclosure shall not be used to make determinations about individuals.
8. A record from this system of records may be disclosed, as a routine use, to the public after either publication of the application pursuant to 35 U.S.C. 122(b) or issuance of a patent pursuant to 35 U.S.C. 151. Further, a record may be disclosed, subject to the limitations of 37 CFR 1.14, as a routine use, to the public if the record was filed in an application which became abandoned or in which the proceedings were terminated and which application is referenced by either a published application, an application open to public inspection or an issued patent.
9. A record from this system of records may be disclosed, as a routine use, to a Federal, State, or local law enforcement agency, if the USPTO becomes aware of a violation or potential violation of law or regulation.

UNITED STATES PATENT AND TRADEMARK OFFICE

UNITED STATES DEPARTMENT OF COMMERCE
United States Patent and Trademark Office
Address: COMMISSIONER FOR PATENTS
P.O. Box 1450
Alexandria, Virginia 22313-1450
www.uspto.gov

APPLICATION NO.	FILING DATE	FIRST NAMED INVENTOR	ATTORNEY DOCKET NO.	CONFIRMATION NO.
12/884,565	09/17/2010	Edward Lee McGrath	246217/GEC-171	6970

87853 7590 01/05/2011

Dority & Manning, PA and General Electric Company
Post Office Box 1449
Greenville, SC 29602

EXAMINER	
EASTMAN, AARON ROBERT	
ART UNIT	**PAPER NUMBER**
3745	
MAIL DATE	**DELIVERY MODE**
01/05/2011	PAPER

Please find below and/or attached an Office communication concerning this application or proceeding.

The time period for reply, if any, is set in the attached communication.

UNITED STATES PATENT AND TRADEMARK OFFICE

Commissioner for Patents
United States Patent and Trademark Office
P.O. Box 1450
Alexandria, VA 22313-1450
www.uspto.gov

Dority & Manning, PA and General Electric Company
Post Office Box 1449
Greenville SC 29602

In re Application of	:	
MCGRATH, EDWARD LEE et al	:	DECISION ON PETITION
Application No. 12/884,565	:	TO MAKE SPECIAL UNDER
Filed: Sep. 17, 2010	:	THE GREEN TECHNOLOGY
Attorney Docket No. 246217/GEC/171	:	PILOT PROGRAM

This is a decision on the petition under 37 CFR 1.102, filed Dec. 30, 2010, to make the above-identified application special under the pilot program for applications pertaining to Green Technologies as set forth in 74 Federal Register Notice 64666 (December 8, 2009) and amended by 75 Federal Register Notice 28554 (May 21, 2010) and 75 Federal Register Notice 69049 (November 10, 2010).

The petition is **granted.**

If reconsideration of this decision is desired, a petition for reconsideration must be filed within ONE (1) MONTH OR THIRTY (30) DAYS from the mail date of this decision, whichever is longer. No extension of this time limit can be granted under 37 CFR 1.136(a) or (b). The petition for reconsideration should include an exhaustive attempt to provide the lacking item(s) noted below, since, after a decision on the petition for reconsideration, no further reconsideration or review of the matter will be undertaken by the Director.

A grantable petition to make an application special under 37 CFR 1.102 and the pilot program as set forth in 74 FR 64666 must be directed to a nonprovisional application filed under 35 USC 111(a) or be a national stage entry under 35 USC 371, exclusive of any reissue applications.

In order to qualify for special status, the following requirements must be met. 1) The application must have no more than 3 independent claims and no more than 20 total claims. 2) The application must not contain any multiple dependent claims. 3) The petition must state the basis for seeking special status, i.e., the claimed invention either: A) materially enhances the quality of the environment or B) materially contributes to: i) the discovery or development of renewable energy resources, ii) the more efficient utilization and conservation of energy resources, or iii)

greenhouse gas emission reduction. 4) If the disclosure is not clear on its face that the claimed invention materially contributes under category (A) or (B), the petition must be accompanied by a statement by the applicant, assignee, or an attorney/agent registered to practice before the Office explaining how the materiality standard is met. 5) A statement that applicant will agree to make an election without traverse in a telephonic interview if a restriction requirement is made by the examiner. 6) The petition to make special must be filed electronically. 7) The petition must be filed at least one day prior to the date that a first Office Action appears in the Patent Application Information Retrieval (PAIR) system. 8) The petition must be accompanied by a request for early publication in compliance with 37 CFR 1.219 and include the publication fee as set forth in 37 CFR 1.18(d).

The requirement for a fee for consideration of the petition to make special for applications pertaining to Green Technologies has been waived.

The instant petition complies with items 1 – 8 above. Accordingly, the above-identified application has been accorded "special" status.

Telephone inquires concerning this decision should be directed to Henry C. Yuen at 571-272-4856.

This application will be forwarded to the Technology Center Art Unit 3745 for action on the merits commensurate with this decision.

/Henry C. Yuen/

Henry C. Yuen
Quality Assurance Specialist
Technology Center TC 3700

Doc Code: PET.AUTO **Document Description: Petition automatically granted by EFS-Web**	PTO/SB/83 U.S. Patent and Trademark Office Department of Commerce

Electronic Petition Request	**REQUEST FOR WITHDRAWAL AS ATTORNEY OR AGENT AND CHANGE OF CORRESPONDENCE ADDRESS**
Application Number	12884575
Filing Date	17-Sep-2010
First Named Inventor	Michael Moser
Art Unit	1635
Examiner Name	AMY BOWMAN
Attorney Docket Number	023542-0297
Title	POLYMERASE INHIBITOR AND METHOD OF USING SAME

◉ Please withdraw me as attorney or agent for the above identified patent application and the practitioners of record associated with Customer Number: 61495

The reason(s) for this request are those described in 37 CFR:

10.40(b)(4)

Certifications

☒ I/We have given reasonable notice to the client, prior to the expiration of the response period, that the practitioner(s) intend to withdraw from employment

☒ I/We have delivered to the client or a duly authorized representative of the client all papers and property (including funds) to which the client is entitled

☒ I/We have notified the client of any responses that may be due and the time frame within which the client must respond

Change the correspondence address and direct all future correspondence to the first named inventor or assignee that has properly made itself of record pursuant to 37 CFR 3.71:

Name	ERAGEN BIOSCIENCES, INC.
Address	918 DEMING WAY, SUITE 201
City	MADISON
State	WI
Postal Code	53717-1933
Country	US

I am authorized to sign on behalf of myself and all withdrawing practitioners.	
Signature	/Kassel, Mark/
Name	Kassel, Mark
Registration Number	38200

UNITED STATES PATENT AND TRADEMARK OFFICE

Commissioner for Patents
United States Patent and Trademark Office
P.O. Box 1450
Alexandria, VA 22313-1450
www.uspto.gov

Decision Date : November 30, 2011

In re Application of :

Michael Moser

Application No : 12884575

Filed : 17-Sep-2010

Attorney Docket No : 023542-0297

DECISION ON REQUEST TO WITHDRAW AS ATTORNEY/AGENTOF RECORD

This is an electronic decision on the Request to Withdraw as attorney or agent of record under 37 CFR § 1.36(b), filed November 30, 2011

The request is **APPROVED.**

The request was signed by Kassel, Mark (registration no. 38200) on behalf of all attorneys/agents associated with Customer Number 61495 . All attorneys/agents associated with Cusotmer Number 61495 have been withdrawn.

Since there are no remaining attorneys of record, all future communications from the Office will be directed to the first named inventor or assignee that has properly made itself of record pursuant to 37 CFR 3.71, with correspondence address:

Name ERAGEN BIOSCIENCES, INC.
Name2
Address 1 918 DEMING WAY, SUITE 201
Address 2
City MADISON
State WI
Postal Code 53717-1933
Country US

As a reminder, requester is required to inform the first named inventor or assignee that has properly made itself of record pursuant to 37 CFR 3.71 of the electronically processed petition.

Telephone inquiries concerning this decision should be directed to the Patent Electronic Business Center (EBC) at 866-217-9197.

Office of Petitions

UNITED STATES PATENT AND TRADEMARK OFFICE

Commissioner for Patents
United States Patent and Trademark Office
P.O. Box 1450
Alexandria, VA 22313-1450
www.uspto.gov

DENTSPLY INTERNATIONAL INC
570 WEST COLLEGE AVENUE
YORK PA 17404

MAILED

APR 02 2012

OFFICE OF PETITIONS

In re Application of :
Steward, et al. :
Application No. 12/884,585 : DECISION
Filed/Deposited: 17 September, 2010 :
Attorney Docket No. RIN-05-049-CIP :

This is a decision on the petition filed on 16 January, 2012, pursuant to 37 C.F.R. §1.137(b) for revival of an application abandoned due to unintentional delay.

NOTE:

Petitioner submitted with the instant petition a request and fee for extension of time, which Petitioner—as one registered to practice before the Office—is aware is inappropriate and not proper.

Moreover, Petitioner failed to pay the petition fee on deposit of the instant petition.

The fee for extension of time is refunded; the fee for the petition is charged to a deposit account as generally authorized.

Should Petitioner later find that the inappropriate fees were not refunded, Petitioner may wish to request a refund from the Office of Finance and include therewith a copy of this decision.

The petition pursuant to 37 C.F.R. §1.137(b) is **GRANTED**.

As to the Allegations
of Unintentional Delay

The requirements of a grantable petition pursuant to 37 C.F.R. §1.137(b) are the petition and fee therefor, a reply, a proper statement of unintentional delay under the regulation, and, where applicable, a terminal disclaimer and fee.

BACKGROUND

The record reflects as follows:

Petitioner failed to reply timely and properly to the Notice of Missing Parts mailed on 1 October, 2010, with reply due absent extension of time on or before 1 December, 2010.

Following Petitioner's submissions on 23 February, 2011(with request and fee for extension of time), and again on 23 and 24 March, 2011, the Office mailed Notices of Incomplete Reply successively and respectively on 7 March, 2011, and 31 March, 2011, which did not restart the period for reply.

Thus, the application went abandoned by operation of law after midnight 1 March, 2011.

The Office mailed a Notice of Abandonment on 30 September, 2011.

On 16 January, 2012, Petitioner filed, *inter alia*, a petition pursuant to 37 C.F.R. §1.137(b), with no fee but with fee authorization, with a reply in the form of fees/surcharge due and made the statement of unintentional delay.

Petitioners' attentions always are directed to the guidance in the Commentary at MPEP §711.03(c) as to the showing regarding unintentional delay and a petition pursuant to 37 C.F.R. §1.137(b).

The availability of applications and application papers online to applicants/practitioners who diligently associate their Customer Number with the respective application(s) now provides an applicant/practitioner on-demand information as to events/transactions in an application.

Out of an abundance of caution, Petitioners always are reminded that those registered to practice and all others who make representations before the Office **must** inquire into the underlying facts of representations made to the Office and support averments with the appropriate documentation–since all owe to the Office the continuing duty to disclose.[1]

[1] See supplement of 17 June, 1999. The Patent and Trademark Office is relying on petitioner's duty of candor and good faith and accepting a statement made by Petitioner. See Changes to Patent Practice and Procedure, 62 Fed. Reg. at 53160 and 53178, 1203 Off. Gaz. Pat. Office at 88 and 103 (responses to comments 64 and 109)(applicant obligated under 37 C.F.R. §11.18, formerly §10.18, to inquire into the underlying facts and circumstances when providing statements to the Patent and Trademark Office).

STATUTES, REGULATIONS

Congress has authorized the Commissioner to "revive an application if the delay is shown to the satisfaction of the Commissioner to have been "unavoidable." 35 U.S.C. §133 (1994). And the regulations at 37 C.F.R. §1.137(a) and (b) set forth the requirements for a Petitioner to revive a previously unavoidably or unintentionally, respectively, abandoned application.[2],[3]

Moreover, the Office has set forth in the Commentary at MPEP §711.03(c)(I) the showing and timeliness requirements for a proper showing for relief under 37 C.F.R. §1.181 in these matters.

Decisions on reviving abandoned applications on the basis of "unavoidable" delay have adopted the reasonably prudent person standard in determining if the delay was unavoidable:

> The word 'unavoidable' . . . is applicable to ordinary human affairs, and requires no more or greater care or diligence than is generally used and observed by prudent and careful men in relation to their most important business. It permits them in the exercise of this care to rely upon the ordinary and trustworthy agencies of mail and telegraph, worthy and reliable employees, and such other means and instrumentalities as are usually employed in such important business. If unexpectedly, or through the unforeseen fault or imperfection of these agencies and instrumentalities, there occurs a failure, it may properly be said to be unavoidable, all other conditions of promptness in its rectification being present.[4]

As to Allegations of Unintentional Delay

As indicated above, the requirements of a grantable petition pursuant to 37 C.F.R. §1.137(b) are the petition and fee therefor, a proper reply, a proper statement and/or showing of unintentional delay under the regulation, and, where applicable, a terminal disclaimer and fee.

---

[2] See: Changes to Patent Practice and Procedure; Final Rule Notice, 62 Fed. Reg. at 53158-59 (October 10, 1997), 1203 Off. Gaz. Pat. Office at 86-87 (October 21, 1997).

[3] The language of 35 U.S.C. §133 and 37 C.F.R. §1.137(a) is clear, unambiguous, and without qualification: the delay in tendering the reply to the outstanding Office action, as well as filing the first petition seeking revival, must have been unavoidable for the reply now to be accepted on petition. (Therefore, by example, an unavoidable delay in the payment of the Filing Fee might occur if a reply is shipped by the US Postal Service, but due to catastrophic accident, the delivery is not made.) Delays in responding properly raise the question whether delays are unavoidable. Where there is a question whether the delay was unavoidable, Petitioners must meet the burden of establishing that the delay was unavoidable within the meaning of 35 U.S.C. §133 and 37 C.F.R. §1.137(a) And the Petitioner must be diligent in attending to the matter. Failure to do so does not constitute the care required under Pratt, and so cannot satisfy the test for diligence and due care. (By contrast, unintentional delays are those that do not satisfy the very strict statutory and regulatory requirements of unavoidable delay, and also, by definition, are not intentional.))

[4] In re Mattullath, 38 App. D.C. 497, 514-15 (1912)(quoting Ex parte Pratt, 1887 Dec. Comm'r Pat. 31, 32-33 (1887)); see also Winkler v. Ladd, 221 F. Supp. 550, 552, 138 USPQ 666, 167-68 (D.D.C. 1963), aff'd, 143 USPQ 172 (D.C. Cir. 1963); Ex parte Henrich, 1913 Dec. Comm'r Pat. 139, 141 (1913). In addition, decisions on revival are made on a "case-by-case basis, taking all the facts and circumstances into account." Smith v. Mossinghoff, 671 F.2d 533, 538, 213 USPQ 977, 982 (D.C. Cir. 1982). Finally, a petition cannot be granted where a petitioner has failed to meet his or her burden of establishing that the delay was "unavoidable." Haines v. Quigg, 673 F. Supp. 314, 316-17, 5 USPQ2d 1130, 1131-32 (N.D. Ind. 1987).

It appears that the requirements under the rule have been satisfied.

CONCLUSION

Accordingly, the petition pursuant to 37 C.F.R. §1.137(b) is **granted**.

The instant application is released to the Office of Patent Application Processing (OPAP) for further processing in due course.

Petitioner may find it beneficial to view Private PAIR within a fortnight of the instant decision to ensure that the revival has been acknowledged by the OPAP in response to this decision. It is noted that all inquiries with regard to status need be directed to the OPAP where that change of status must be effected—that does not occur in the Office of Petitions.

Telephone inquiries regarding this decision may be directed to the undersigned at (571) 272-3214—it is noted, however , that all practice before the Office is in writing (see: 37 C.F.R. §1.2[5]) and the proper authority for action on any matter in this regard are the statutes (35 U.S.C.), regulations (37 C.F.R.) and the commentary on policy (MPEP). Therefore, no telephone discussion may be controlling or considered authority for Petitioner's action(s).

/John J. Gillon, Jr./
John J. Gillon, Jr.
Senior Attorney
Office of Petitions

[5] The regulations at 37 C.F.R. §1.2 provide:

§1.2 Business to be transacted in writing.

All business with the Patent and Trademark Office should be transacted in writing. The personal attdance of applicants or their attorneys or agents at the Patent and Trademark Office is unnecessary. The action of the Patent and Trademark Office will be based exclusively on the written record in the Office. No attention will be paid to any alleged oral promise, stipulation, or understanding in relation to which there is disagreement or doubt.

UNITED STATES PATENT AND TRADEMARK OFFICE

Commissioner for Patents
United States Patent and Trademark Office
P.O. Box 1450
Alexandria, VA 22313-1450
www.uspto.gov

MORRISON & FOERSTER LLP
1650 TYSONS BOULEVARD
SUITE 400
MCLEAN VA 22102

MAILED

MAR 13 2012

OFFICE OF PETITIONS

In re Application of
Naoko Hiramatsu
Application No.: 12/884,632
Filed: September 17, 2010
Attorney Docket No.: 325772062500
For: IMAGE PROCESSING METHOD, IMAGE PROCESSING APPARATUS, AND COMPUTER-READABLE STORAGE MEDIUM FOR COMPUTER PROGRAM

: DECISION ON REQUEST TO
: PARTICIPATE IN THE PATENT
: PROSECUTION HIGHWAY
: PROGRAM AND PETITION
: TO MAKE SPECIAL UNDER
: 37 CFR 1.102(a)

This is a decision on the request to participate in the Patent Prosecution Highway (PPH) program and the petition under 37 CFR 1.102(a), filed December 12, 2011, to make the above-identified application special.

The request and petition are **GRANTED**.

Discussion

A grantable request to participate in the PPH pilot program and petition to make special require:

1. The U.S. application is

    a. a Paris Convention application which either
        i. validly claims priority under 35 U.S.C. 119(a) and 37 CFR 1.55 to one or more applications filed in the JPO, or
        ii. validly claims priority to a PCT application that contains no priority claims, or
    b. a national stage application under the PCT (an application which entered the national stage in the U.S. from a PCT international application after compliance with 35 U.S.C. 371), which PCT application
        i. validly claims priority to an application filed in the JPO, or
        ii. validly claims priority to a PCT application that contains no priority claims, or
        iii. contains no priority claim, or
    c. a so-called bypass application filed under 35 U.S.C. 111(a) which validly claims benefit under 35 U.S.C. 120 to a PCT application, which PCT application
        i. validly claims priority to an application filed in the JPO, or

ii. validly claims priority to a PCT application that contains no priority claims, or
iii. contains no priority claim;

2. Applicant must submit a copy of:
   a. The allowable/patentable claim(s) from the JPO application(s);
   b. An English translation of the allowable/patentable claim(s) and
   c. A statement that the English translation is accurate;
3. Applicant must:
   a. Ensure all the claims in the U.S. application must sufficiently correspond or be amended to sufficiently correspond to the allowable/patentable claim(s) in the JPO application(s) and
   b. Submit a claims correspondence table in English;
4. Examination of the U.S. application has not begun;
5. Applicant must submit:
   a. Documentation of prior office action:
      i. a copy of the office action(s) just prior to the "Decision to Grant a Patent" from each of the JPO application(s) containing the allowable/patentable claim(s) or
      ii. if the allowable/patentable claims(s) are from a "Notification of Reasons for Refusal" then the Notification of Reasons for Refusal or
      iii. if the JPO application is a first action allowance then no office action from the JPO is necessary should be indicated on the request/petition form;
   b. An English language translation of the JPO Office action from (5)(a)(i)-(ii) above
   c. A statement that the English translation is accurate;
6. Applicant must submit:
   a. An IDS listing the documents cited by the JPO examiner in the JPO office action (unless already submitted in this application)
   b. Copies of the documents except U.S. patents or U.S. patent application publications (unless already submitted in this application);

The request to participate in the PPH pilot program and petition comply with the above requirements. Accordingly, the above-identified application has been accorded "special" status.

Inquiries concerning this decision should be directed to Irvin Dingle at (571) 272-3210.

All other inquiries concerning the examination or status of the application is accessible in the PAIR system at http://www.uspto.gov/ebc.index.html.

This application will be forwarded to the examiner for action on the merits commensurate with this decision once this application's formality reviews have been completed.

/David Bucci/
Petitions Examiner
Office of Petitions

UNITED STATES PATENT AND TRADEMARK OFFICE

Commissioner for Patents
United States Patent and Trademark Office
P.O. Box 1450
Alexandria, VA 22313-1450
www.uspto.gov

Leason Ellis LLP
81 Main Street
Suite 503
White Plains NY 10601

MAILED

MAY 09 2011

OFFICE OF PETITIONS

In re Application of :
Shaun F. Garber, et al. :
Application No. 12/884,643 : DECISION ON PETITION
Filed: September 17, 2010 : TO MAKE SPECIAL UNDER
Attorney Docket No. 1686/1616-US2 : 37 CFR 1.102(c)(1)
:

This is a decision on the petition under 37 CFR 1.102(c)(1), filed March 23, 2011, to make the above-identified application special based on applicant's age as set forth in M.P.E.P. § 708.02, Section IV.

The petition is **GRANTED.**

A grantable petition to make an application special under 37 CFR 1.102(c)(1) and MPEP § 708.02, Section IV: Applicant's Age must be accompanied by evidence showing that at least one of the applicants is 65 years of age, or more, such as a birth certificate or a statement by applicant. No fee is required

The instant petition includes a statement from the applicant, Vladimir Shaposhnikov, declaring that he/she is 65 years of age or older. Accordingly, the above-identified application has been accorded "special" status.

Telephone inquiries concerning this decision should be directed to Terri Johnson at 571-272-2991.

All other inquiries concerning either the examination or status of the application should be directed to the Technology Center.

The application is being forwarded to the Technology Center Art Unit 3651 for action on the merits commensurate with this decision.

/Terri Johnson/
Terri Johnson
Petitions Examiner
Office of Petitions

UNITED STATES PATENT AND TRADEMARK OFFICE

Commissioner for Patents
United States Patent and Trademark Office
P.O. Box 1450
Alexandria, VA 22313-1450
www.uspto.gov

In re Application of
Rabindra N. Das

Application No. 12884657

Filed:

Attorney Docket No. EI-2-08-023

:DECISION ON PETITION TO MAKE SPECIAL
:UNDER 37 CFR 1.102(c)(1)

This is a decision on the electronic petition under 37 CFR 1.102 (c)(1), filed 17-SEP-2010 to make the above-identified application special based on applicant's age as set forth in MPEP § 708.02, Section IV.

The petition is **GRANTED**.

A grantable petition to make an application special under 37 CFR 1.102(c)(1), MPEP § 708.02, Section IV: Applicant's Age must include a statement by applicant or a registered practitioner having evidence that applicant is at least 65 years of age. No fee is required.

Accordingly, the above-identified application has been accorded "special" status and will be taken up for action by the examiner upon the completion of all pre-examination processing.

Telephone inquiries concerning this electronic decision should be directed to the Electronic Business Center at 866-217-9197.

All other inquiries concerning either the examination or status of the application should be directed to the Technology Center.

Doc Code: PPH.PET.652 V20263

Document Description: Petition to make special under Patent Pros Hwy

PTO/SB/20JP (07-11)
Approved for use through 01/31/2012. OMB 0651-0058
U.S. Patent and Trademark Office; U.S. DEPARTMENT OF COMMERCE
Under the Paperwork Reduction Act of 1995, no persons are required to respond to a collection of information unless it displays a valid OMB control number.

REQUEST FOR PARTICIPATION IN THE PATENT PROSECUTION HIGHWAY (PPH) PROGRAM BETWEEN THE JAPAN PATENT OFFICE (JPO) AND THE USPTO

Application No.:	12/884,680	Filing Date:	September 17, 2010
First Named Inventor:	Keita SUZUKI		
Attorney Docket No.:	P/2850-361		

Title of the Invention: ENDOSCOPIC TREATMENT TOOL

THIS REQUEST FOR PARTICIPATION IN THE PPH PROGRAM ALONG WITH THE REQUIRED DOCUMENTS MUST BE SUBMITTED VIA EFS-WEB. INFORMATION REGARDING EFS-WEB IS AVAILABLE AT HTTP://WWW.USPTO.GOV/EBC/EFS_HELP.HTML.

APPLICANT HEREBY REQUESTS PARTICIPATION IN THE PATENT PROSECUTION HIGHWAY (PPH) PROGRAM AND PETITIONS TO MAKE THE ABOVE-IDENTIFIED APPLICATION SPECIAL UNDER THE PPH PROGRAM.

The above-identified application and the corresponding JPO application(s) have the same priority/filing date.

The JPO application number(s) is/are: JP 2009-066248 and PCT/JP2009/070915

The filing date of the JPO application(s) is/are: 03/18/09 and 12/15/09

I. List of Required Documents:

a. **A copy of the latest JPO office actions (other than "Decision to Grant a Patent"*) in the above-identified JPO application(s)**

☐ Is attached.

☑ Is not attached because the JPO application was allowed in a first office action.

*It is not necessary to submit a copy of the "Decision to Grant a Patent" and an English translation thereof.

b. **A copy of all claims which were determined to be patentable by the JPO in the above-identified JPO application(s)**

☑ Is attached.

c. **English translations of the documents in a. and b. above along with a statement that the English translations are accurate are attached (if the documents are not in the English language). An accuracy statement for the English translation of the documents in a. above is not required if the English translation is a machine translation provided by the JPO.**

d. **(1) An information disclosure statement listing the documents cited in the JPO office actions**

☐ Is attached.

☑ Has already been filed in the above-identified U.S. application on September 17, 2010

(2) Copies of all documents (except for U.S. patents or U.S. patent application publications)

☐ Are attached.

☑ Have already been filed in the above-identified U.S. application on September 17, 2010

This collection of information is required by 35 U.S.C. 119, 37 CFR 1.55, and 37 CFR 1.102(d). The information is required to obtain or retain a benefit by the public, which is to file (and by the USPTO to process) an application. Confidentiality is governed by 35 U.S.C. 122 and 37 CFR 1.11 and 1.14. This collection is estimated to take 2 hours to complete, including gathering, preparing, and submitting the completed application form to the USPTO. Time will vary depending upon the individual case. Any comments on the amount of time you require to complete this form and/or suggestions for reducing this burden should be sent to the Chief Information Officer, U.S. Patent and Trademark Office, U.S. Department of Commerce, P.O. Box 1450, Alexandria, VA 22313-1450. DO NOT SEND FEES OR COMPLETED FORMS TO THIS ADDRESS.

PTO/SB/20JP (07-11)
Approved for use through 01/31/2012. OMB 0651-0058
U.S.Patent and Trademark Office; U.S. DEPARTMENT OF COMMERCE
Under the Paperwork Reduction Act of 1995, no persons are required to respond to a collection of information unless it displays a valid OMB control number.

REQUEST FOR PARTICIPATION IN THE PATENT PROSECUTION HIGHWAY (PPH) BETWEEN THE JAPAN PATENT OFFICE (JPO) AND THE USPTO

(continued)

Application No.:	12/884,680
First Named Inventor:	Keita SUZUKI

II. Claims Correspondence Table:

Claims in US Application	Patentable Claims in JPO Application	Explanation regarding the correspondence
1	1	No difference
2	2	No difference
3	3	No difference
4	4	No difference
5	5	No difference

III. All the claims in the US application sufficiently correspond to the patentable/allowable claims in the JPO application.

Signature	Date July 29, 2011
Name (Print/Typed) Max Moskowitz	Registration Number 30,576

Privacy Act Statement

The **Privacy Act of 1974 (P.L. 93-579)** requires that you be given certain information in connection with your submission of the attached form related to a patent application or patent. Accordingly, pursuant to the requirements of the Act, please be advised that: (1) the general authority for the collection of this information is 35 U.S.C. 2(b)(2); (2) furnishing of the information solicited is voluntary; and (3) the principal purpose for which the information is used by the U.S. Patent and Trademark Office is to process and/or examine your submission related to a patent application or patent. If you do not furnish the requested information, the U.S. Patent and Trademark Office may not be able to process and/or examine your submission, which may result in termination of proceedings or abandonment of the application or expiration of the patent.

The information provided by you in this form will be subject to the following routine uses:

1. The information on this form will be treated confidentially to the extent allowed under the Freedom of Information Act (5 U.S.C. 552) and the Privacy Act (5 U.S.C 552a). Records from this system of records may be disclosed to the Department of Justice to determine whether disclosure of these records is required by the Freedom of Information Act.
2. A record from this system of records may be disclosed, as a routine use, in the course of presenting evidence to a court, magistrate, or administrative tribunal, including disclosures to opposing counsel in the course of settlement negotiations.
3. A record in this system of records may be disclosed, as a routine use, to a Member of Congress submitting a request involving an individual, to whom the record pertains, when the individual has requested assistance from the Member with respect to the subject matter of the record.
4. A record in this system of records may be disclosed, as a routine use, to a contractor of the Agency having need for the information in order to perform a contract. Recipients of information shall be required to comply with the requirements of the Privacy Act of 1974, as amended, pursuant to 5 U.S.C. 552a(m).
5. A record related to an International Application filed under the Patent Cooperation Treaty in this system of records may be disclosed, as a routine use, to the International Bureau of the World Intellectual Property Organization, pursuant to the Patent Cooperation Treaty.
6. A record in this system of records may be disclosed, as a routine use, to another federal agency for purposes of National Security review (35 U.S.C. 181) and for review pursuant to the Atomic Energy Act (42 U.S.C. 218(c)).
7. A record from this system of records may be disclosed, as a routine use, to the Administrator, General Services, or his/her designee, during an inspection of records conducted by GSA as part of that agency's responsibility to recommend improvements in records management practices and programs, under authority of 44 U.S.C. 2904 and 2906. Such disclosure shall be made in accordance with the GSA regulations governing inspection of records for this purpose, and any other relevant (*i.e.*, GSA or Commerce) directive. Such disclosure shall not be used to make determinations about individuals.
8. A record from this system of records may be disclosed, as a routine use, to the public after either publication of the application pursuant to 35 U.S.C. 122(b) or issuance of a patent pursuant to 35 U.S.C. 151. Further, a record may be disclosed, subject to the limitations of 37 CFR 1.14, as a routine use, to the public if the record was filed in an application which became abandoned or in which the proceedings were terminated and which application is referenced by either a published application, an application open to public inspection or an issued patent.
9. A record from this system of records may be disclosed, as a routine use, to a Federal, State, or local law enforcement agency, if the USPTO becomes aware of a violation or potential violation of law or regulation.

VERIFICATION OF TRANSLATIONS

Re: Patentable Claims of Japanese Patent Application (No. 2010-537176)

Address: I, Yukio AKIYAMA of c/o SHIGA INTERNATIONAL PATENT OFFICE, GranTokyo South Tower 1-9-2 Marunouchi, Chiyoda-ku, Tokyo, Japan,

hereby declare and state that I am the translator of the documents listed above and certify that the translations are true translations to the best of my knowledge and belief.

Signature of Translator: Yukio AKIYAMA

Dated this: 29th, day of July, 2011.

English translation of Claims of JP-2010-537176

1. An endoscopic treatment tool, comprising:

a treatment part which is adapted to conduct treatment of tissue within a body cavity;

an operation part which is adapted to operate the treatment part;

an operation shaft member which connects the treatment part and the operation part; and

a coil sheath part through which the operation shaft member passes so that the operation shaft member is capable of forward or backward movement, wherein:

the coil sheath part comprises:

a first coil sheath around which wire is helically wound; and

a second coil sheath that has a lower compressive resistance than the first coil sheath, and that has a higher rotation follow-up capability than the first coil sheath;

the first coil sheath and the second coil sheath are disposed so as to coaxially and radially overlap;

a first end part and a second end part of the second coil sheath are respectively connected to the treatment part and the operation part so as to be incapable of relative rotation around an axis of the second coil sheath; and

at least one of the first end part and the second end part is capable of relative movement in an axial direction with respect to the first coil sheath.

2. The endoscopic treatment tool according to claim 1, wherein one of the first end part and the second end part of the second coil sheath is capable of relative movement in the axial direction with respect to the first coil sheath, and the other one of the first end part and the second end part is incapable of relative movement in the axial direction with respect to the first coil sheath.

3. The endoscopic treatment tool according to claim 1, wherein:

the first coil sheath is formed by helically winding a single wire; and

the second coil sheath is formed by helically winding multiple wires in the same direction.

4. The endoscopic treatment tool according to claim 1, wherein a first end part and a second end part of the first coil sheath are respectively connected to the treatment

part and the operation part so as to be capable of relative rotation around an axis of the first coil sheath and incapable of relative movement in the axial direction.

5. The endoscopic treatment tool according to claim 1, wherein the treatment part has a pair of forcep members that can be opened and closed.

【書類名】特許請求の範囲
【請求項１】
体腔内組織に対して処置を行うための処置部と、
前記処置部を操作するための操作部と、
前記処置部と前記操作部とを接続する操作軸部材と、
前記操作軸部材が進退可能に挿通されたコイルシース部と、
を備え、
前記コイルシース部は、
素線が螺旋状に巻き回された第１コイルシースと、
前記第１コイルシースより低い耐圧縮性を有し、かつ前記第１コイルシースより高い回転追従性を有する第２コイルシースと、を有し、
かつ前記第１コイルシースと前記第２コイルシースとが同軸かつ径方向に重畳するように配置されており、
前記第２コイルシースの第１の端部及び第２の端部は、それぞれ前記処置部及び前記操作部に対して自身の軸線回りに相対回転不能に接続されており、
前記第１の端部及び前記第２の端部の少なくとも一方は、前記第１コイルシースに対して軸線方向に相対移動可能である
内視鏡用処置具。

【請求項２】
前記第２コイルシースの前記第１の端部及び前記第２の端部の一方は、前記第１コイルシースに対して軸線方向に相対移動可能であり、前記第１の端部及び前記第２の端部の他方は前記第１コイルシースに対して軸線方向に相対移動不能である請求項１に記載の内視鏡用処置具。

【請求項３】
前記第１コイルシースは、１本の素線が螺旋状に巻き回されて形成されており、
前記第２コイルシースは、複数本の素線が同一方向に螺旋状に巻き回されて形成されている請求項１に記載の内視鏡用処置具。

【請求項４】
前記第１コイルシース第１の端部及び第２の端部は、それぞれ前記処置部及び前記操作部に対して自身の軸線回りに相対回転可能かつ自身の軸線方向に相対移動不能に接続されている請求項１に記載の内視鏡用処置具。

【請求項５】

前記処置部は、開閉可能な一対の鉗子部材を有する請求項１に記載の内視鏡用処置具。

UNITED STATES PATENT AND TRADEMARK OFFICE

UNITED STATES DEPARTMENT OF COMMERCE
United States Patent and Trademark Office
Address: COMMISSIONER FOR PATENTS
P.O. Box 1450
Alexandria, Virginia 22313-1450
www.uspto.gov

APPLICATION NO.	FILING DATE	FIRST NAMED INVENTOR	ATTORNEY DOCKET NO.	CONFIRMATION NO.
12/884,680	09/17/2010	Keita SUZUKI	P/2850-361	7187

2352 7590 08/04/2011

OSTROLENK FABER LLP
1180 AVENUE OF THE AMERICAS
NEW YORK, NY 10036-8403

EXAMINER	
ART UNIT	PAPER NUMBER
3734	

MAIL DATE	DELIVERY MODE
08/04/2011	PAPER

Please find below and/or attached an Office communication concerning this application or proceeding.

The time period for reply, if any, is set in the attached communication.

UNITED STATES PATENT AND TRADEMARK OFFICE

Commissioner for Patents
United States Patent and Trademark Office
P.O. Box 1450
Alexandria, VA 22313-1450
www.uspto.gov

OSTROLENK FABER LLP
1180 AVENUE OF THE AMERICAS
NEW YORK NY 10036-8403

In re Application of:	DECISION ON A REQUEST TO
SUZUKI, KEITA	PARTICIPATE IN PATENT
Serial No.: 12/884680	PROSECUTION HIGHWAY
Filed: September 17, 2010	PROGRAM AND PETITION
Attorney Docket No. : P/2850-361	TO MAKE SPECIAL UNDER
Title: ENDOSCOPIC TREATMENT TOOL	CFR 1.102(a)

This is a decision on the request to participate in the Patent Prosecution Highway (PPH) program and the petition under 37 CFR 1.102(a), filed July 29, 2011 to make the above-identified application special.

The request and petition are **granted.**

A grantable request to participate in the PPH program and petition to make special require:

(1) The U.S. application must validly claim priority under 35 U.S.C. 119(a) to one or more corresponding application(s) filed in the JPO;
(2) Applicant must submit a copy of the allowable/patentable claim(s) from the JPO application(s) along with an English translation thereof and a statement that the English translation is accurate;
(3) All the claims in the U.S. application must sufficiently correspond or be amended to sufficiently correspond to the allowable/patentable claim(s) in the JPO application(s);
(4) Examination of the U.S. application has not begun;
(5) Applicant must submit a copy of all the office actions from each of the JPO application(s) containing the allowable/patentable claim(s) along with an English translation thereof and a statement that the English translation is accurate; and
(6) Applicant must submit IDS listing the documents cited by the JPO examiner in the JPO office action along with copies of documents except U.S. patents or U.S. patent application publications.
In light of the petition being properly submitted, the request to participate in the PPH program and the petition comply with the above requirements. Accordingly, the above-identified application has been accorded "special" status.

The applicant is encouraged to cite and submit all relevant prior art references, if any, to facilitate examination in this application.

Response must be filed via EFS-Web. Telephone inquiries concerning this decision should be directed to Henry C. Yuen, at 571-272-4856.

Petition is **granted**.

/Henry C. Yuen/

Henry C. Yuen
Special Programs Examiner
Technology Center 3700
Tel: 571-272-4856

UNITED STATES PATENT AND TRADEMARK OFFICE

UNITED STATES DEPARTMENT OF COMMERCE
United States Patent and Trademark Office
Address: COMMISSIONER FOR PATENTS
P.O. Box 1450
Alexandria, Virginia 22313-1450
www.uspto.gov

APPLICATION NO.	FILING DATE	FIRST NAMED INVENTOR	ATTORNEY DOCKET NO.	CONFIRMATION NO.
12/884,763	09/17/2010	Hiroyuki HANAZONO	9982-97US (1499US)	7353

7590 09/22/2011

PANITCH SCHWARZE BELISARIO & NADEL LLP
ONE COMMERCE SQUARE
2005 MARKET STREET, SUITE 2200
PHILADELPHIA, PA 19103

EXAMINER	
MARKS, JACOB B	

ART UNIT	PAPER NUMBER
1729	

NOTIFICATION DATE	DELIVERY MODE
09/22/2011	ELECTRONIC

DECISION GRANTING PETITION UNDER 37 CFR 1.138(d)

The declaration of express abandonment is recognized

This is in response to the petition under 37 CFR 1.138(d), requesting for a refund of any previously paid search fee and excess claims fee in the above-identified application.

The petition is granted.

The express abandonment is recognized. Any previously paid search fee and excess claims fee are hereby refunded.

Telephone inquiries should be directed to the Office of Data Management at (571) 272-4200.

Mimi Farmer

Patent Publication Branch
Office of Data Management

UNITED STATES PATENT AND TRADEMARK OFFICE

UNITED STATES DEPARTMENT OF COMMERCE
United States Patent and Trademark Office
Address: COMMISSIONER FOR PATENTS
P.O. Box 1450
Alexandria, Virginia 22313-1450
www.uspto.gov

APPLICATION NO.	FILING DATE	FIRST NAMED INVENTOR	ATTORNEY DOCKET NO.	CONFIRMATION NO.
12/884,812	09/17/2010	Tobias Richter	MULT0154PUSA	7449

22045 7590 07/11/2011

BROOKS KUSHMAN P.C.
1000 TOWN CENTER
TWENTY-SECOND FLOOR
SOUTHFIELD, MI 48075

EXAMINER	
RADA, RINALDI I	

ART UNIT	PAPER NUMBER
3721	

MAIL DATE	DELIVERY MODE
07/11/2011	PAPER

Please find below and/or attached an Office communication concerning this application or proceeding.

The time period for reply, if any, is set in the attached communication.

UNITED STATES PATENT AND TRADEMARK OFFICE

Commissioner for Patents
United States Patent and Trademark Office
P.O. Box 1450
Alexandria, VA 22313-1450
www.uspto.gov

BROOKS KUSHMAN P.C.
1000 TOWN CENTER
TWENTY-SECOND FLOOR
SOUTHFIELD, MI 48075

In re Application of:
RICHTER, TOBIAS
Serial No.: 12/884812
Filed: September 17, 2010
Attorney Docket No. : MULT0154PUSA
Title: MACHINE AND METHOD FOR PACKAGING AND HIGH-PRESSURE TREATMENT OF PRODUCTS

DECISION ON A REQUEST TO PARTICIPATE IN PATENT PCT/PROSECUTION HIGHWAY PROGRAM AND PETITION TO MAKE SPECIAL UNDER CFR 1.102(a)

This is a decision on the request to participate in the Patent Prosecution Highway (PPH) program and the petition under 37 CFR 1.102(a), filed June 30, 2011 to make the above-identified application special.

The request and petition are **dismissed**.

A grantable request to participate in the PPH pilot program and petition to make special require:

(1) The U.S. application must validly claim priority under 35 U.S.C. 119(a) to one or more applications filed in the DPMA;
(2) Applicant must submit a copy of the allowable/patentable claim(s) from the DPMA application(s);
(3) All the claims in the U.S. application must sufficiently correspond or be amended to sufficiently correspond to the allowable/patentable claim(s) in the DPMA application(s);
(4) Examination of the U.S. application has not begun;
(5) Applicant must submit a copy of all the office actions from each of the DPMA application(s) containing the allowable/patentable claim(s) along with an English translation thereof and a statement that the English translation is accurate; and
(6) Applicant must submit an IDS listing the documents cited by the DPMA examiner in the DPMA office action along with copies of documents except U.S. patents or U.S. patent application publications.

The request to participate in the PPH program and petition met all conditions except Item #3 above.

Claims 10 and 12 do not correspond to the counterpart patentable claims in the DE application. Claim 10 in the application discloses an inspection system where the counterpart allowed claim in the DE application discloses a storage area. The claim 12 counterpart of the allowed DE claim is further limited than claim 12 by requiring alternate/simultaneous high pressures.

Applicant is encouraged to cite and submit all relevant prior art references, if any, to facilitate examination in this application.

Applicant is given a time period of **ONE MONTH or THIRTY DAYS**, whichever is longer, from the mailing date of this decision to correct the deficiencies. **NO EXTENSION OF TIME UNDER 37 CFR 1.136 IS PERMITTED.** If the deficiencies are not corrected with the time period given, the application will await action in its regular turn. Response must be filed via EFS-Web.

Telephone inquiries concerning this decision should be directed to Henry C. Yuen at 571-272-4856.

Petition is **dismissed**.

/Henry C. Yuen/

Henry C. Yuen, Special Programs Examiner
Technology Center 3700 – Mechanical Engineering,
Manufacturing and Products
571-272-4856

UNITED STATES PATENT AND TRADEMARK OFFICE

UNITED STATES DEPARTMENT OF COMMERCE
United States Patent and Trademark Office
Address: COMMISSIONER FOR PATENTS
P.O. Box 1450
Alexandria, Virginia 22313-1450
www.uspto.gov

APPLICATION NO.	FILING DATE	FIRST NAMED INVENTOR	ATTORNEY DOCKET NO.	CONFIRMATION NO.
12/884,812	09/17/2010	Tobias Richter	MULT0154PUSA	7449

22045 7590 07/29/2011

BROOKS KUSHMAN P.C.
1000 TOWN CENTER
TWENTY-SECOND FLOOR
SOUTHFIELD, MI 48075

EXAMINER	
RADA, RINALDI I	

ART UNIT	PAPER NUMBER
3721	

MAIL DATE	DELIVERY MODE
07/29/2011	PAPER

Please find below and/or attached an Office communication concerning this application or proceeding.

The time period for reply, if any, is set in the attached communication.

UNITED STATES PATENT AND TRADEMARK OFFICE

Commissioner for Patents
United States Patent and Trademark Office
P.O. Box 1450
Alexandria, VA 22313-1450
www.uspto.gov

BROOKS KUSHMAN P.C.
1000 TOWN CENTER
TWENTY-SECOND FLOOR
SOUTHFIELD MI 48075

In re Application of:
RICHTER, TOBIAS
Serial No.: 12/884812
Filed: September 17, 2010
Attorney Docket No. : MULT0154PUSA
Title: MACHINE AND METHOD FOR PACKAGING AND HIGH-PRESSURE TREATMENT OF PRODUCTS

DECISION ON A REQUEST TO PARTICIPATE IN PATENT PROSECUTION HIGHWAY PROGRAM AND PETITION TO MAKE SPECIAL UNDER CFR 1.102(a)

This is a decision on the request to participate in the Patent Prosecution Highway (PPH) program and the petition under 37 CFR 1.102(a), filed July 27, 2011 to make the above-identified application special.

The request and petition are **granted.**

A grantable request to participate in the PPH program and petition to make special require:

(1) The U.S. application must validly claim priority under 35 U.S.C. 119(a) to one or more corresponding application(s) filed in the DPMA;
(2) Applicant must submit a copy of the allowable/patentable claim(s) from the DPMA application(s) along with an English translation thereof and a statement that the English translation is accurate;
(3) All the claims in the U.S. application must sufficiently correspond or be amended to sufficiently correspond to the allowable/patentable claim(s) in the DPMA application(s);
(4) Examination of the U.S. application has not begun;
(5) Applicant must submit a copy of all the office actions from each of the DPMA application(s) containing the allowable/patentable claim(s) along with an English translation thereof and a statement that the English translation is accurate; and
(6) Applicant must submit IDS listing the documents cited by the DPMA examiner in the DPMA office action along with copies of documents except U.S. patents or U.S. patent application publications.

A previous decision on the instant petition was mailed on July 11, 2011. The previous decision stated the request and petition failed to meet condition Item #3 above. At the time, claims 10 and 12 in the U.S. application did not correspond to their counterpart claims in the DE application. Claim 10 disclosed a different limitation than its counterpart while claim 12 did not contain the DE limitation of alternate/simultaneous high pressures. Since then, Applicant has amended claim 12 to include the "alternatively and/or simultaneous" limitation. Furthermore, Applicant has corrected the claim correspondence table to have U.S. claim 10 correspond to DE claim 11 instead. As such, all of the claims in the U.S. application now sufficiently correspond to the allowable claims in the DE application.

In light of the claim amendments, the request to participate in the PPH program and the petition comply with the above requirements. Applicant has corrected the deficiencies in a timely manner within the given one month period. Accordingly, the above-identified application has been accorded "special" status.

The applicant is encouraged to cite and submit all relevant prior art references, if any, to facilitate examination in this application.

Response must be filed via EFS-Web. Telephone inquiries concerning this decision should be directed to Henry C. Yuen, at 571-272-4856.

Petition is **granted**.

/Henry C. Yuen/

Henry C. Yuen
Special Programs Examiner
Technology Center 3700
Tel: 571-272-4856

Doc Code: PPH.PCT.652
Document Description: Petition to make special under PCT-Patent Pros Hwy

PTO/SB/20PCT-KR (06-10)
Approved for use through 01/31/2012. OMB 0651-0058
U.S. Patent and Trademark Office; U. S. DEPARTMENT OF COMMERCE
Under the Paperwork Reduction Act of 1995, no persons are required to respond to a collection of information unless it displays a valid OMB control number.

REQUEST FOR PARTICIPATION IN THE PATENT COOPERATION TREATY - PATENT PROSECUTION HIGHWAY (PCT-PPH) PILOT PROGRAM BETWEEN THE KOREAN INTELLECTUAL PROPERTY OFFICE (KIPO) AND THE USPTO

Application No:	12/884,828	Filing date:	September 17, 2010
First Named Inventor:	Anil Kamath		
Title of the Invention:	ADVERTISEE-HISTORY-BASED BID GENERATION SYSTEM AND METHOD FOR MULTI-CHANNEL ADVERTISING		

THIS REQUEST FOR PARTICIPATION IN THE PCT-PPH PILOT PROGRAM ALONG WITH THE REQUIRED DOCUMENTS MUST BE SUBMITTED VIA EFS-WEB. INFORMATION REGARDING EFS-WEB IS AVAILABLE AT HTTP://WWW.USPTO.GOV/EBC/EFS_HELP.HTML

APPLICANT HEREBY REQUESTS PARTICIPATION IN THE PCT-PPH PROGRAM AND PETITIONS TO MAKE THE ABOVE-IDENTIFIED APPLICATION SPECIAL UNDER THE PCT-PPH PROGRAM.

The above-identified application is (1) a national stage entry of the corresponding PCT application, or (2) a national stage entry of another PCT application which claims priority to the corresponding PCT application, or (3) a national application that claims domestic/ foreign priority to the corresponding PCT application, or (4) a national application which forms the basis for the priority claim in the corresponding PCT application, or (5) a continuing application of a U.S. application that satisfies one of (1) to (4) above, or (6) a U.S. application that claims domestic benefit to a U.S. provisional application which forms the basis for the priority claim in the corresponding PCT application.

The corresponding PCT application number(s) is/are: PCT/US10/049332

The international filing date of the corresponding PCT application(s) is/are: September 17, 2010

I. List of Required Documents:

a. **A copy of the latest international work product (WO/ISA, WO/IPEA, or IPER) in the above–identified corresponding PCT application(s)**

☑ Is attached.

☐ Is not attached because the document is already in the U.S. application.

b. **A copy of all claims which were indicated as having novelty, inventive step and industrial applicability in the above-identified corresponding PCT application(s).**

☑ Is attached.

☐ Is not attached because the document is already in the U.S. application.

c. **English translations of the documents in a. and b. above are attached (if the documents are not in the English language). A statement that the English translation is accurate is attached for the document in b. above.**

This collection of information is required by 35 U.S.C. 119, 37 CFR 1.55, and 37 CFR 1.102(d). The information is required to obtain or retain a benefit by the public, which is to file (and by the USPTO to process) an application. Confidentiality is governed by 35 U.S.C. 122 and 37 CFR 1.11 and 1.14. This collection is estimated to take 2 hours to complete, including gathering, preparing, and submitting the completed application form to the USPTO. Time will vary depending upon the individual case. Any comments on the amount of time you require to complete this form and/or suggestions for reducing this burden should be sent to the Chief Information Officer, U.S. Patent and Trademark Office, U.S. Department of Commerce, P.O. Box 1450, Alexandria, VA 22313-1450. DO NOT SEND FEES OR COMPLETED FORMS TO THIS ADDRESS.

PTO/SB/20PCT-KR (06-10)
Approved for use through 01/31/2012. OMB 0651-0058
U.S.Patent and Trademark Office; U.S. DEPARTMENT OF COMMERCE
Under the Paperwork Reduction Act of 1995, no persons are required to respond to a collection of information unless it displays a valid OMB control number.

REQUEST FOR PARTICIPATION IN THE PCT-PPH PILOT PROGRAM BETWEEN THE KIPO AND THE USPTO

(continued)

Application No.:	12/884,828
First Named Inventor:	Anil Kamath

d. **(1) An information disclosure statement listing the documents cited in the international work products (ISR, WO/ISA, WO/IPEA, IPER) of the corresponding PCT application.**

☐ Is attached

☑ Has already been filed in the above-identified U.S. application on July 11, 2011

(2) Copies of all documents (except) for U.S. patents or U.S. patent application publications)

☐ Are attached.

☑ Have already been filed in the above-identified U.S. application on July 11, 2011

II. Claims Correspondence Table:

Claims in US Application	Patentable Claims in the corresponding PCT Application	Explanation regarding the correspondence
1	4	Amended US 1 has scope corresponding to PCT 4.
2	4	US 2 depends from amended US 1 and is narrower than PCT 4.
3	4	US 3 depends from amended US 1 and is narrower than PCT 4.
5	5	Amended US 5 has scope corresponding to PCT 5.
6, 7	6, 7	US and PCT claims are respectively identical.
8	8	Amended US 8 has scope corresponding to PCT 8.
9-19	9-19	US claims 9-19 are respectively identical to PCT claims 9-19.
20	20	Amended US 20 has scope corresponding to PCT 20.
21, 22	21, 22	US and PCT claims are respectively identical.
23-30	23-30	US and PCT claims are respectively identical.
31-41	31-41	US and PCT claims are respectively identical.

III. All the claims in the US application sufficiently correspond to the patentable claims in the corresponding PCT application.

Signature /Ryan C. Fox/	Date August 31, 2011
Name (Print/Typed) Ryan C. Fox	Registration Number 65369

Privacy Act Statement

The **Privacy Act of 1974 (P.L. 93-579)** requires that you be given certain information in connection with your submission of the attached form related to a patent application or patent. Accordingly, pursuant to the requirements of the Act, please be advised that: (1) the general authority for the collection of this information is 35 U.S.C. 2(b)(2); (2) furnishing of the information solicited is voluntary; and (3) the principal purpose for which the information is used by the U.S. Patent and Trademark Office is to process and/or examine your submission related to a patent application or patent. If you do not furnish the requested information, the U.S. Patent and Trademark Office may not be able to process and/or examine your submission, which may result in termination of proceedings or abandonment of the application or expiration of the patent.

The information provided by you in this form will be subject to the following routine uses:

1. The information on this form will be treated confidentially to the extent allowed under the Freedom of Information Act (5 U.S.C. 552) and the Privacy Act (5 U.S.C 552a). Records from this system of records may be disclosed to the Department of Justice to determine whether disclosure of these records is required by the Freedom of Information Act.
2. A record from this system of records may be disclosed, as a routine use, in the course of presenting evidence to a court, magistrate, or administrative tribunal, including disclosures to opposing counsel in the course of settlement negotiations.
3. A record in this system of records may be disclosed, as a routine use, to a Member of Congress submitting a request involving an individual, to whom the record pertains, when the individual has requested assistance from the Member with respect to the subject matter of the record.
4. A record in this system of records may be disclosed, as a routine use, to a contractor of the Agency having need for the information in order to perform a contract. Recipients of information shall be required to comply with the requirements of the Privacy Act of 1974, as amended, pursuant to 5 U.S.C. 552a(m).
5. A record related to an International Application filed under the Patent Cooperation Treaty in this system of records may be disclosed, as a routine use, to the International Bureau of the World Intellectual Property Organization, pursuant to the Patent Cooperation Treaty.
6. A record in this system of records may be disclosed, as a routine use, to another federal agency for purposes of National Security review (35 U.S.C. 181) and for review pursuant to the Atomic Energy Act (42 U.S.C. 218(c)).
7. A record from this system of records may be disclosed, as a routine use, to the Administrator, General Services, or his/her designee, during an inspection of records conducted by GSA as part of that agency's responsibility to recommend improvements in records management practices and programs, under authority of 44 U.S.C. 2904 and 2906. Such disclosure shall be made in accordance with the GSA regulations governing inspection of records for this purpose, and any other relevant (*i.e.*, GSA or Commerce) directive. Such disclosure shall not be used to make determinations about individuals.
8. A record from this system of records may be disclosed, as a routine use, to the public after either publication of the application pursuant to 35 U.S.C. 122(b) or issuance of a patent pursuant to 35 U.S.C. 151. Further, a record may be disclosed, subject to the limitations of 37 CFR 1.14, as a routine use, to the public if the record was filed in an application which became abandoned or in which the proceedings were terminated and which application is referenced by either a published application, an application open to public inspection or an issued patent.
9. A record from this system of records may be disclosed, as a routine use, to a Federal, State, or local law enforcement agency, if the USPTO becomes aware of a violation or potential violation of law or regulation.

Efficient Frontier ATA/RCF/AK P011PCT

PCT/US2010/049332

PATENT COOPERATION TREATY

From the INTERNATIONAL SEARCHING AUTHORITY

To:

FOX RYAN C.

SCHWABE, WILLIAMSON & WYATT, P.C. 1420 5TH AVENUE, SUITE 3400 SEATTLE WA 98101 USA

PCT

NOTIFICATION OF TRANSMITTAL OF THE INTERNATIONAL SEARCH REPORT AND THE WRITTEN OPINION OF THE INTERNATIONAL SEARCHING AUTHORITY, OR THE DECLARATION

(PCT Rule 44.1)

Applicant's or agent's file reference 111210-177986	**FOR FURTHER ACTION** See paragraphs 1 and 4 below
International application No. **PCT/US2010/049332**	International filing date *(day/month/year)* **17 SEPTEMBER 2010 (17.09.2010)**
Applicant **EFFICIENT FRONTIER et al**	

Date of mailing *(day/month/year)* 03 JUNE 2011 (03.06.2011)

1. ☒ The applicant is hereby notified that the international search report and the written opinion of the International Searching Authority have been established and are transmitted herewith.

Filing of amendments and statement under Article 19:

The applicant is entitled, if he so wishes, to amend the claims of the international application (see Rule 46):

When? The time limit for filing such amendments is normally two months from the date of transmittal of the international search report.

Where? Directly to the International Bureau of WIPO, 34 chemin des Colombettes 1211 Geneva 20, Switzerland, Facsimile No.: +41 22 338 82 70

For more detailed instructions, see *PCT Applicant's Guide*, International Phase, paragraphs 9.004 . 9.011.

2. ☐ The applicant is hereby notified that no international search report will be established and that the declaration under Article 17(2)(a) to that effect and the written opinion of the International Searching Authority are transmitted herewith.

3. ☐ **With regard to any protest** against payment of (an) additional fee(s) under Rule 40.2, the applicant is notified that:

☐ the protest together with the decision thereon has been transmitted to the International Bureau together with any request to forward the texts of both the protest and the decision thereon to the designated Offices.

☐ no decision has been made yet on the protest; the applicant will be notified as soon as a decision is made.

4. **Reminders**

The applicant may submit comments on an informal basis on the written opinion of the International Searching Authority to the International Bureau. The International Bureau will send a copy of such comments to all designated Offices unless an international preliminary examination report has been or is to be established. Following the expiration of 30 months from the priority date, these comments will also be made available to the public.

Shortly after the expiration of **18 months** from the priority date, the international application will be published by the International Bureau. If the applicant wishes to avoid or postpone publication, a notice of withdrawal of the international application, or of the priority claim, must reach the International Bureau before the completion of the technical preparations for international publication (Rules 90bis.1 and 90bis.3).

Within **19 months** from the priority date, but only in respect of some designated Offices, a demand for international preliminary examination must be filed if the applicant wishes to postpone the entry into the national phase **until 30 months** from the priority date (in some Offices even later); otherwise, the applicant must, **within 20 months** from the priority date, perform the prescribed acts for entry into the national phase before those designated Offices.

In respect of other designated Offices, the time limit of **30 months** (or later) will apply even if no demand is filed within 19months.

For details about the applicable time limits, Office by Office, see www.wipo.int/pct/en/texts/time_limits.html and the PCT Applicant's Guide, National Chapters.

Name and mailing address of the ISA/KR Korean Intellectual Property Office Government Complex-Daejeon, 189 Cheongsa-ro, Seo-gu, Daejeon 302-701, Republic of Korea Facsimile No. 82-42-472-7140	Authorized officer COMMISSIONER Telephone No. 82-42-481-8753

RECEIVED
JUN 14 2011
Schwabe, Williamson & Wyatt
Opened / Scanned / Docketed

* Attention

Copies of the documents cited in the international search report can be searched in the following Korean Intellectual Property Office English website for three months from the date of mailing of the international search report.

http://www.kipo.go.kr/en/ => PCT Services => PCT Services

ID : PCT international application number
PW : **JQ4ADCZJ**

Inquiries related to PCT International Search Report or Written Opinion prepared by KIPO as an International Searching Authority can be answered not only by KIPO but also through IPKC (Intellectual Property Korea Center), located in Vienna, VA, which functions as a PCT Help Desk for PCT applicants.

Homepage: http://www.ipkcenter.com
Email: ipkc@ipkcenter.com
Phone: +1 703 388 1066
Fax: +1 703 388 1084

PATENT COOPERATION TREATY

PCT

INTERNATIONAL SEARCH REPORT

(PCT Article 18 and Rules 43 and 44)

Applicant's or agent's file reference	FOR FURTHER ACTION	see Form PCT/ISA/220 as well as, where applicable, item 5 below.
111210-177986		
International application No.	International filing date *(day/month/year)*	(Earliest) Priority Date *(day/month/year)*
PCT/US2010/049332	**17 SEPTEMBER 2010 (17.09.2010)**	18 SEPTEMBER 2009 (18.09.2009)
Applicant		
EFFICIENT FRONTIER et al		

This International search report has been prepared by this International Searching Authority and is transmitted to the applicant according to Article 18. A copy is being transmitted to the International Bureau.

This international search report consists of a total of 3 sheets.

☐ It is also accompanied by a copy of each prior art document cited in this report.

1. **Basis of the report**
   a. With regard to the **language**, the international search was carried out on the basis of:
      ☒ the international application in the language in which it was filed
      ☐ a translation of the international application into _____, which is the language of a translation furnished for the purposes of international search (Rules 12.3(a) and 23.1(b))
   b. ☐ This international search report has been established taking into account **the rectification of an obvious mistake** authorized by or notified to this Authority under Rule 91 (Rule 43.6*bis*(a)).
   c. ☐ With regard to any **nucleotide and/or amino acid sequence** disclosed in the international application, see Box No. I.
2. ☐ **Certain claims were found unsearchable** (See Box No. II)
3. ☐ **Unity of invention is lacking** (See Box No. III)
4. With regard to the **title**,
   ☒ the text is approved as submitted by the applicant.
   ☐ the text has been established by this Authority to read as follows:

5. With regard to the **abstract**,
   ☒ the text is approved as submitted by the applicant.
   ☐ the text has been established, according to Rule 38.2, by this Authority as it appears in Box No. IV. The applicant may, within one month from the date of mailing of this international search report, submit comments to this Authority.
6. With regard to the drawings,
   a. the figure of the **drawings** to be published with the abstract is Figure No. 2
      ☒ as suggested by the applicant.
      ☐ as selected by this Authority, because the applicant failed to suggest a figure.
      ☐ as selected by this Authority, because this figure better characterizes the invention.
   b. ☐ none of the figure is to be published with the abstract.

INTERNATIONAL SEARCH REPORT

International application No.
PCT/US2010/049332

A. CLASSIFICATION OF SUBJECT MATTER

G06Q 30/00(2006.01)i

According to International Patent Classification (IPC) or to both national classification and IPC

B. FIELDS SEARCHED

Minimum documentation searched (classification system followed by classification symbols)

G06Q 30/00; G06F 17/60; G06F 17/40

Documentation searched other than minimum documentation to the extent that such documents are included in the fields searched

Korean utility models and applications for utility models
Japanese utility models and applications for utility models

Electronic data base consulted during the international search (name of data base and, where practicable, search terms used)

eKOMPASS(KIPO internal) & Keywords: advertisee, event history, evaluation, bid

C. DOCUMENTS CONSIDERED TO BE RELEVANT

Category*	Citation of document, with indication, where appropriate, of the relevant passages	Relevant to claim No.
Y A	US 2008-0010144 A1 (CHATWIN, R. E. et al.) 10 January 2008 See abstract, figure 2, paragraphs [0056]-[0065].	1-3,20-22 4-19,23-41
Y A	WO 2004-084109 A1 (NHN CORPORATION et al.) 30 September 2004 See abstract and pages 5-16.	1-3,20-22 4-19,23-41
Y A	US 2008-0103892 A1 (CHATWIN, R. E. et al.) 01 May 2008 See abstract and paragraphs [0053]-[0057].	1-3,20-22 4-19,23-41
A	JP 2003-216864 A (JAPAN TELECOM CO., LTD.) 31 July 2003 See abstract, paragraphs[0048]-[0050], claim 1 and figure 10.	1-41
A	US 2008-0114639 A1 (MEEK, C. A. et al.) 15 May 2008 See abstract, paragraphs [0040]-[0042] and claims 1-3,11-12.	1-41
A	US 6285987 B1 (ROTH,D. W. et al.) 04 September 2001 See abstract and column 1 line 66-column 3 line 2.	1-41

☐ Further documents are listed in the continuation of Box C. ☒ See patent family annex.

* Special categories of cited documents:
"A" document defining the general state of the art which is not considered to be of particular relevance
"E" earlier application or patent but published on or after the international filing date
"L" document which may throw doubts on priority claim(s) or which is cited to establish the publication date of citation or other special reason (as specified)
"O" document referring to an oral disclosure, use, exhibition or other means
"P" document published prior to the international filing date but later than the priority date claimed
"T" later document published after the international filing date or priority date and not in conflict with the application but cited to understand the principle or theory underlying the invention
"X" document of particular relevance; the claimed invention cannot be considered novel or cannot be considered to involve an inventive step when the document is taken alone
"Y" document of particular relevance; the claimed invention cannot be considered to involve an inventive step when the document is combined with one or more other such documents,such combination being obvious to a person skilled in the art
"&" document member of the same patent family

Date of the actual completion of the international search	Date of mailing of the international search report
01 JUNE 2011 (01.06.2011)	**03 JUNE 2011 (03.06.2011)**

Name and mailing address of the ISA/KR
Korean Intellectual Property Office
Government Complex-Daejeon, 189 Cheongsa-ro,
Seo-gu, Daejeon 302-701, Republic of Korea
Facsimile No. 82-42-472-7140

Authorized officer
HONG, Kyoung hee
Telephone No. 82-42-481-5781

INTERNATIONAL SEARCH REPORT

Information on patent family members

International application No.
PCT/US2010/049332

Patent document cited in search report	Publication date	Patent family member(s)	Publication date
US 2008-0010144 A1	10.01.2008	None	
WO 2004-084109 A1	30.09.2004	CN 1761972 A	19.04.2006
		JP 2006-520939 A	14.09.2006
		KR 10-0447526 B1	08.09.2004
US 2008-0103892 A1	01.05.2008	None	
JP 2003-216864 A	31.07.2003	None	
US 2008-0114639 A1	15.05.2008	AU 2007-319612 A1	22.05.2008
		CA 2664684 A1	22.05.2008
		CN 101536025 A	16.09.2009
		EP 2095315 A1	02.09.2009
		JP 2010-510579 A	02.04.2010
		KR 10-2009-0076913 A	13.07.2009
		MX 2009004056 A	27.04.2009
		NO 20091719A	14.08.2009
		WO 2008-060821 A1	22.05.2008
US 6285987 B1	04.09.2001	AU 1998-58196 B2	26.07.2001
		AU 2000-23580 A1	12.07.2000
		AU 5819698 A	25.08.1998
		CA 2271672 A1	06.08.1998
		EP 1010115 A1	21.06.2000
		EP 1010115 A4	06.04.2005
		EP 1159684 A1	05.12.2001
		JP 2001-514772 A	11.09.2001
		US 2002-0029186 A1	07.03.2002
		US 2007-0299682 A1	27.12.2007
		US 2008-0052195 A1	28.02.2008
		US 2008-0059361 A1	06.03.2008
		WO 00-38074 A1	29.06.2000
		WO 98-34189 A1	06.08.1998

PATENT COOPERATION TREATY

From the
INTERNATIONAL SEARCHING AUTHORITY

To:
FOX RYAN C.

SCHWABE, WILLIAMSON & WYATT, P.C. 1420 5TH AVENUE, SUITE 3400 SEATTLE WA 98101 USA

PCT

WRITTEN OPINION OF THE INTERNATIONAL SEARCHING AUTHORITY

(PCT Rule 43bis.1)

Date of mailing *(day/month/year)*	**03 JUNE 2011 (03.06.2011)**
Applicant's or agent's file reference 111210-177986	**FOR FURTHER ACTION** See paragraph 2 below

International application No.	International filing date *(day/month/year)*	Priority date *(day/month/year)*
PCT/US2010/049332	**17 SEPTEMBER 2010 (17.09.2010)**	18 SEPTEMBER 2009 (18.09.2009)

International Patent Classification (IPC) or both national classification and IPC

G06Q 30/00(2006.01)i

Applicant

EFFICIENT FRONTIER et al

1. This opinion contains indications relating to the following items:

- [x] Box No. I Basis of the opinion
- [ ] Box No. II Priority
- [ ] Box No. III Non-establishment of opinion with regard to novelty, inventive step and industrial applicability
- [ ] Box No. IV Lack of unity of invention
- [x] Box No. V Reasoned statement under Rule 43bis.1(a)(i) with regard to novelty, inventive step or industrial applicability; citations and explanations supporting such statement
- [ ] Box No. VI Certain documents cited
- [ ] Box No. VII Certain defects in the international application
- [ ] Box No. VIII Certain observations on the international application

2. **FURTHER ACTION**

If a demand for international preliminary examination is made, this opinion will be considered to be a written opinion of the International Preliminary Examining Authority ("IPEA") except that this does not apply where the applicant chooses an Authority other than this one to be the IPEA and the chosen IPEA has notified the International Bureau under Rule 66.1bis(b) that written opinions of this International Searching Authority will not be so considered.

If this opinion is, as provided above, considered to be a written opinion of the IPEA, the applicant is invited to submit to the IPEA a written reply together, where appropriate, with amendments, before the expiration of 3 months from the date of mailing of Form PCT/ISA/220 or before the expiration of 22 months from the priority date, whichever expires later.
For further options, see Form PCT/ISA/220.

3. For further details, see notes to Form PCT/ISA/220.

Name and mailing address of the ISA/KR	Date of completion of this opinion	Authorized officer
Korean Intellectual Property Office Government Complex-Daejeon, 189 Cheongsa-ro, Seo-gu, Daejeon 302-701, Republic of Korea Facsimile No. 82-42-472-7140	01 JUNE 2011 (01.06.2011)	HONG, Kyoung hee Telephone No.82-42-481-5781

WRITTEN OPINION OF THE INTERNATIONAL SEARCHING AUTHORITY

International application No.
PCT/US2010/049332

Box No. I Basis of this opinion

1. With regard to the **language**, this opinion has been established on the basis of:

   ☒ the international application in the language in which it was filed

   ☐ a translation of the international application into _____, which is the language of a translation furnished for the purposes of international search (Rules 12.3(a) and 23.1(b))

2. ☐ This opinion has been established taking into account the **rectification of an obvious mistake** authorized by or notified to this Authority under Rule 91 (Rule 43*bis*.1(a))

3. With regard to any **nucleotide and/or amino acid sequence** disclosed in the international application, this opinion has been established on the basis of:

   a. a sequence listing filed or furnished
      ☐ on paper
      ☐ in electronic form

   b. time of filing or furnishing
      ☐ contained in the international application as filed.
      ☐ filed together with the international application in electronic form.
      ☐ furnished subsequently to this Authority for the purposes of search.

4. ☐ In addition, in the case that more than one version or copy of a sequence listing has been filed or furnished, the required statements that the information in the subsequent or additioanl copies is identical to that in the application as filed or does not go beyond the application as filed, as appropriate, were furnished.

5. Additional comments:

WRITTEN OPINION OF THE INTERNATIONAL SEARCHING AUTHORITY

International application No.
PCT/US2010/049332

Box No. V Reasoned statement under Rule 43bis.1(a)(i) with regard to novelty, inventive step or industrial applicability; citations and explanations supporting such statement

1. Statement

Novelty (N)	Claims	1-41	YES
	Claims	NONE	NO
Inventive step (IS)	Claims	4-19,23-41	YES
	Claims	1-3,20-22	NO
Industrial applicability (IA)	Claims	1-41	YES
	Claims	NONE	NO

2. Citations and explanations :

Reference is made to the following documents:

D1: US 2008-0010144 A1 (CHATWIN, R. E. et al.) 10 January 2008
D2: WO 2004-084109 A1 (NHN CORPORATION et al.) 30 September 2004
D3: US 2008-0103892 A1 (CHATWIN, R. E. et al.) 01 May 2008
D4: JP 2003-216864 A (JAPAN TELECOM CO., LTD.) 31 July 2003
D5: US 2008-0114639 A1 (MEEK, C. A. et al.) 15 May 2008
D6: US 6285987 B1 (ROTH,D. W. et al.) 04 September 2001

1. Novelty and Inventive Step

1.1 Claims 1-22

Claim 1 relates to a method for bid generation for multi-channel advertising environment comprising: tracking an event history for an individual advertisee across a plurality of advertising channels, the event history including one or more non-conversion advertising events, evaluating the event history to determine a value of performing one or more potential advertising events for the individual advertisee, and generating one or more bids for the one or more advertising events in one or more of the plurality of channels based on the results of said evaluating or providing the results of said evaluating for said generating. D1 discloses a method for generating target bids for advertisement including the features of retrieving analystics data for advertisement groups, retrieving action data associated with the advertisement groups, and generating target bids for the advertisement groups (See abstract, figure 2 and paragraphs [0056]-[0067]). Although D1 does not specifically teach the feature of tracking an event history for an individual advertisee and evaluating the event history to determine a value of performing potential advertising events, D2 discloses a method for advertising including the feature of tracking and analyzing an event history of a user to provide specific advertisements to the user according to the analysis results (See abstract and page 7). Furthermore, it is obvious to a person skilled in the art to arrive at the subject matter of claim 1 by combining the feature of D2 with D1. Accordingly, claim 1 is considered to lack an inventive step under PCT Article 33(3).

Claims 2-3 describe the additional features of collecting an event history using web browser cookies or tracking codes. However, these features are also indicated by D2 which shows tracking and analyzing an event history of a user using a web browser cookie file and history information (See abstract and page 7). Therefore, no inventive step is present in the subject matter of claims 2-3 under PCT Article 33(3) either.

- Continued on the Supplemental Box -

Supplemental Box

In case the space in any of the preceding boxes is not sufficient.
Continuation of:

Box No. V

As for claims 4-19, the additional features described in the claims are neither known nor obvious to a person skilled in the art by the documents D1-D6, taken alone or in combination. Accordingly, these claims are new and involve an inventive step under PCT Article 33(2) and (3).

The additional features of claims 20-22 relate to the composition of generating one or more visulaizations describing the one or more bids to an advertiser. However, these features are a variation of the feature of generating and distributing target bids to an advertiser disclosed in D1 (See paragraphs [0064]-[0067]). Hence, claims 20-22 do not involve an inventive step under PCT Article 33(3).

1.2 Claims 23-30

Referring to claim 23, the features of generating a multi-channel advertising model based on a stored event history and generating a bidding strategy directing bids for advertising events based on the multi-channel advertising model are not disclosed in any of the documents D1-D6. Moreover, it is not obvious to a person skilled in the art by the documents, taken alone or in combination. Therefore, claim 23 is novel and involves an inventive step under PCT Article 33(2) and (3).

As claims 24-30 are dependent on claim 23, these claims are considered to be new and have an inventive step under PCT Article 33(2) and (3) as well.

1.3 Claims 31-41

Claim 31 relates to an article and the subject matter of this claim is substantially the same as that of claim 6. Therefore, claim 31 meets the requirements of PCT Article 33(2) and (3) regarding novelty and inventive step.

Claims 32-41 are also considered to be novel and involve an inventive step under PCT Article 33(2) and (3) because they are dependent claims referring to claim 31.

2. Industrial Applicability

Claims 1-41 are industrially applicable and meet the requirements of PCT Article 33(4).

Claims

What is claimed is:

1. A computer-implemented method for bid generation for a multi-channel advertising environment, the method comprising:

tracking, by a computing device, an event history for an individual advertisee across a plurality of advertising channels the event history including one or more non-conversion advertising events;

evaluating, by the computing device, the event history, including the one or more non-conversion advertising events, to determine a value of performing one or more potential advertising events for the individual advertisee; and

generating one or more bids for the one or more potential advertising events in one or more of the plurality of channels, based on the results of said evaluating, or providing the results of said evaluating for said generating.

2. The method of claim 1, wherein collecting an event history for an individual advertisee across a plurality of advertising channels comprises using web browser cookies to track the individual advertisee.

3. The method of claim 1, wherein collecting an event history for an individual advertisee across a plurality of advertising channels comprises using tracking codes to track the individual advertisee.

4. The method of claim 1, wherein evaluating the event history comprises generating, by the computing device, a multi-channel advertising model based at least in part on the event history.

5. The method of claim 4, wherein generating one or more bids comprises optimizing, by the computing device, an objective function based at least in part on the generated model.

6. The method of claim 5, further comprising executing the bidding strategy by performing one or more bids for advertising events as directed by the bidding strategy.

7. The method of claim 5, wherein optimizing the objective function comprises optimizing the objective function subject to one or more constraints.

8. The method of claim 4, wherein generating the multi-channel advertising model comprises:

determining, by the computing device, one or more latent factors based on the event history;

generating, by the computing device, clusters of advertising entities and event metadata; and

performing, by the computing device, value estimation for advertisees.

9. The method of claim 8, wherein generating the multi-channel advertising model further comprises:

determining, by the computing device, arrival rates of advertisees at one or more web sites for which the multi-channel advertising model is developed; and

determining, by the computing device, costs of advertising events.

10. The method of claim 8, wherein determining one or more latent factors comprises:

generating, by the computing device, an implicit revenue intent matrix;

factorizing, by the computing device, the implicit revenue intent matrix;

selecting, by the computing device, one or more latent dimensions in the implicit revenue intent matrix; and

profiling, by the computing device, latent dimensions as latent factors.

11. The method of claim 8, wherein generating clusters of advertising entities comprises:

calculating, by the computing device, loadings of advertisees; and

generating, by the computing device, advertisee clusters.

12. The method of claim 11, wherein generating clusters of advertising entities further comprises:

calculating, by the computing device, loadings of metadata; and

generating, by the computing device, metadata clusters.

13. The method of claim 8, wherein performing the value estimation for advertisees comprises performing, by the computing device, a value estimation based on a sequence of events undergone by an individual advertisee.

14. The method of claim 13, wherein performing a value estimation based on a sequence of events comprises computing, by the computing device, a probability that the individual advertisee will convert to a revenue event for the advertiser based on the sequence of events.

15. The method of claim 14, wherein computing a probability that the individual advertisee will convert to a revenue event for the advertiser based on the sequence of events comprises:

creating, by the computing device, a model with states representing sequences of events;

estimating, by the computing device, conversion probabilities for states; and

estimating, by the computing device, value for an advertisee as a function of a state the advertisee is at and the conversion probability for the state.

16. The method of claim 15, wherein creating the model comprises:

identifying, by the computing device, states which result in conversions;

creating, by the computing device, intermediate states;

adding, by the computing device, model states for conversion and non-conversion events;

adding, by the computing device, a pooled state; and

creating, by the computing device, a directed acyclic graph on the created states.

17. The method of claim 13, wherein performing a valuation based on a sequence of events comprises performing, by the computing device, the valuation based on a time-stamped sequence of events.

18. The method of claim 17, wherein performing the valuation based on a time-stamped sequence of events comprises fitting, by the computing device, a discrete-time hazard model to estimate a conversion probability for the individual advertisee at a given point in time.

19. The method of claim 18, wherein fitting the discrete-time hazard model comprises:

creating, by the computing device, a discrete-time event history for the individual advertisee;

populating, by the computing device, a covariate matrix for time-related variables, conversion occurrence, and censoring;

generating, by the computing device, a log-likelihood function for the discrete-time hazard model; and

estimating, by the computing device, model parameters for the model.

20. The method of claim 1, further comprising generating, by the computing device, one or more visualizations describing the one or more bids to an advertiser.

21. The method of claim 20, wherein generating one or more visualizations comprises generating a cost distribution visualization describing, for the one or more bids, how costs will be distributed across the plurality of channels.

22. The method of claim 20, wherein generating one or more visualizations comprises generating a cost distribution visualization describing, for the one or more bids, how revenue is predicted to be generated across the plurality of channels.

23. A system for generating bids for multi-channel environment, the system comprising:

one or more computer processors;

an event history storage coupled to the one or more computer processors, the event history storage configured to store a history of events for one or more advertisees, including one or more advertising events which are not based on advertisee intent;

one or more multi-channel advertising modeling modules coupled to the event history storage and configured to control the one or more processors, in response to operation by the one or more processors, to generate a multi-channel advertising model based at least in part on the stored event history; and

a bid generation module, coupled to the one or more multi-channel advertising modeling modules and configured to control the one or more processors, in response to operation by the one or more processors, to generate a bidding strategy directing bids for advertising events based at least in part on the multi-channel advertising model.

24. The system of claim 23, wherein the event history storage is further configured to track event history information based on web browser cookies or tracking codes.

25. The system of claim 23, wherein the one or more multi-channel advertising modeling modules comprises a latent factor modeling module configured to control the one or more processors, in response to operation by the one or more processors, to determine one or more latent factors based on the stored event history.

26. The system of claim 23, wherein the one or more multi-channel advertising modeling modules comprises a clustering module configured to control the one or more processors, in response to operation by the one or more processors, to cluster advertising entities and event metadata.

27. The system of claim 23, wherein the one or more multi-channel advertising modeling modules comprises a value estimation module configured to control the one or more processors, in response to operation by the one or more processors, to perform value estimation for advertisees.

28. The system of claim 23, further comprising an arrival prediction module configured to control the one or more processors, in response to operation by the one or more processors, to predict arrival rates of advertisees at one or more web sites for which the multi-channel advertising model is developed.

29. The system of claim 23, further comprising a bid/cost relationship estimation module configured to control the one or more processors, in response to operation by the one or more processors, to estimate costs of bidding for advertising events.

30. The system of claim 23, further comprising a visualization module configured to control the one or more processors, in response to operation by the one or more processors, to generate one or more visualizations describing distributions of costs and/or revenues for the bidding strategy across the multi-channel environment.

31. An article of manufacture, comprising:

a tangible computer-readable storage medium; and

a plurality of computer-executable instructions stored on the tangible computer-readable storage medium, wherein the computer-executable instructions, in response to execution by an apparatus, cause the apparatus to perform operations for generating a bidding strategy for directing bidding for advertising events, the operations including:

collecting an event history for an advertisee across a plurality of advertising channels including one or more non-conversion advertising events;

generating a multi-channel advertising model based at least in part on the event history;

optimizing an objective function based at least in part on the generated model to determine a bidding strategy including one or more bids for advertising events in

the plurality of advertising channels; and

executing the bidding strategy by performing one or more bids for advertising events as directed by the bidding strategy in the plurality of advertising channels.

32. The article of claim 31, wherein collecting an event history for an individual advertisee across a plurality of advertising channels comprises using web browser cookies or tracking codes to track the individual advertisee.

33. The article of claim 31, wherein generating a multi-channel advertising model comprises:

determining one or more latent factors based on the event history;

generating clusters of advertising entities;

performing value estimation for advertisees;

determining arrival rates of advertisees at one or more web sites for which the multi-channel advertising model is developed; and

determining costs of advertising events.

34. The article of claim 32, wherein determining one or more latent factors comprises:

generating an implicit revenue intent matrix;

factorizing the implicit revenue intent matrix;

selecting one or more latent dimensions in the implicit revenue intent matrix; and

profiling latent dimensions as latent factors.

35. The article of claim 32, wherein generating clusters of advertising entities comprises:

calculating loadings of advertisees;

generating advertisee clusters.

calculating loadings of metadata; and

generating metadata clusters.

36. The article of claim 32, wherein performing the value estimation for advertisees comprises computing a probability that the individual advertisee will convert to a revenue event for the advertiser based on the sequence of events.

37. The article of claim 36, wherein computing a probability that the individual advertisee will convert to a revenue event for the advertiser based on the sequence of events comprises:

creating a model with states representing sequences of events;

estimating conversion probabilities for states; and

estimating value for an advertisee as a function of a state the advertisee is at and the conversion probability.

38. The article of claim 32, wherein performing the value estimation for advertisees comprises performing, by the computing device, the value estimation based on a time-stamped sequence of events.

39. The article of claim 38, wherein performing the value estimation based on a time-stamped sequence of events comprises fitting a discrete-time hazard model to estimate a conversion probability for the individual advertisee at a given point in time by:

creating a discrete-time event history for the individual advertisee;

populating a covariate matrix for time-related variables, conversion occurrence, and censoring;

generating a log-likelihood function for the discrete-time hazard model; and

estimating model parameters for the model.

40. The article of claim 31, wherein the operations further include generating a cost distribution visualization describing, for the bidding strategy, how costs will be distributed across the plurality of advertising channels.

41. The article of claim 31, wherein the operations further include generating a cost distribution visualization describing, for the bidding strategy, how revenue will be generated across the plurality of channels.

UNITED STATES PATENT AND TRADEMARK OFFICE

Commissioner for Patents
United States Patent and Trademark Office
P.O. Box 1450
Alexandria, VA 22313-1450
www.uspto.gov

SCHWABE, WILLIAMSON & WYATT, P.C.
1420 FIFTH AVENUE, SUITE 3400
SEATTLE WA 98101-4010

MAILED

JAN 17 2012

OFFICE OF PETITIONS

In re Application of:
Kamath et al.
Application No. 12/884,828
Filed: September 17, 2010
Attorney Docket No. 111210-177367

: DECISION ON REQUEST TO
: PARTICIPATE IN THE PATENT
: PROSECUTION HIGHWAY
: PROGRAM AND PETITION
: TO MAKE SPECIAL UNDER
: 37 CFR 1.102(a)

This is a decision on the request to participate in the PCT Patent Prosecution Highway (PCT-PPH) pilot program and the petition under 37 CFR 1.102(a), filed on August 31, 2011 to make the above-identified application special.

The request and petition are **GRANTED**.

Discussion

A grantable request to participate in the PCT-PPH pilot program and petition to make special require:

(1) The U.S. application must have an eligible relationship to one or more PCT applications where the ISA or IPEA are the JPO, EPO, KIPO, NPI, NBPR, or USPTO;

(2) At least one claim in the PCT application has novelty, inventive step, and industrial applicability and must be free of any observations in Box VIII in the latest work product in the international stage or applicant must identify and explain why the claim(s) is/are not subject to the observation in Box VIII;

(3) Applicant must submit a copy of the claim(s) from the PCT application(s) that have novelty, inventive step, and industrial applicability along with an English translation thereof and a statement that the English translation is accurate, if the claims are not in the English language;

(4) All the claims in the U.S. application must sufficiently correspond or be amended to sufficiently correspond to the claim(s) that have novelty, inventive step, and industrial applicability in the PCT application(s);

(5) Examination of the U.S. application has not begun;

(6) Applicant must submit a copy of the latest international work product from the PCT application indicating that the claim(s) have novelty, inventive step, and industrial applicability

along with an English translation thereof and a statement that the English translation is accurate if the latest international work product is not in the English language;

(7) Applicant must submit an IDS listing the documents cited by the PCT examiner in the international work product along with copies of documents except U.S. patents or U.S. patent application publications.

The request to participate in the PCT-PPH pilot program and petition comply with the above requirements. Accordingly, the above-identified application has been accorded "special" status.

Telephone inquiries concerning this decision should be directed to Joan Olszewski at 571-272-7751.

All other inquiries concerning the examination or status of the application is accessible in the PAIR system at http://www.uspto.gov/ebc.index.html.

This application will be forwarded to the examiner for action on the merits commensurate with this decision once this application's formality reviews have been completed.

/dab/
David Bucci
Petitions Examiner
Office of Petitions

UNITED STATES PATENT AND TRADEMARK OFFICE

Commissioner for Patents
United States Patent and Trademark Office
P.O. Box 1450
Alexandria, VA 22313-1450
www.uspto.gov

In re Application of
Doug Mallonee

Application No. 12884887

Filed:

Attorney Docket No. 1790.002A

:DECISION ON PETITION TO MAKE SPECIAL
:UNDER 37 CFR 1.102(c)(1)

This is a decision on the electronic petition under 37 CFR 1.102 (c)(1), filed 17-SEP-2010 to make the above-identified application special based on applicant's age as set forth in MPEP § 708.02, Section IV.

The petition is **GRANTED**.

A grantable petition to make an application special under 37 CFR 1.102(c)(1), MPEP § 708.02, Section IV: Applicant's Age must include a statement by applicant or a registered practitioner having evidence that applicant is at least 65 years of age. No fee is required.

Accordingly, the above-identified application has been accorded "special" status and will be taken up for action by the examiner upon the completion of all pre-examination processing.

Telephone inquiries concerning this electronic decision should be directed to the Electronic Business Center at 866-217-9197.

All other inquiries concerning either the examination or status of the application should be directed to the Technology Center.

Doc Code: PPH.PCT.652
Document Description: Petition to make special under PCT-Patent Pros Hwy

PTO/SB/20PCT-KR (06-10)
Approved for use through 01/31/2012. OMB 0651-0058
U.S. Patent and Trademark Office; U. S. DEPARTMENT OF COMMERCE
Under the Paperwork Reduction Act of 1995, no persons are required to respond to a collection of information unless it displays a valid OMB control number.

REQUEST FOR PARTICIPATION IN THE PATENT COOPERATION TREATY - PATENT PROSECUTION HIGHWAY (PCT-PPH) PILOT PROGRAM BETWEEN THE KOREAN INTELLECTUAL PROPERTY OFFICE (KIPO) AND THE USPTO

Application No:	12884931	Filing date:	2010-09-17
First Named Inventor:	ANDLE, Jeffrey C.		
Title of the Invention:	Controlled Compressional Wave Components of Thickness Shear Mode Multi-Measurand Sensors		

THIS REQUEST FOR PARTICIPATION IN THE PCT-PPH PILOT PROGRAM ALONG WITH THE REQUIRED DOCUMENTS MUST BE SUBMITTED VIA EFS-WEB. INFORMATION REGARDING EFS-WEB IS AVAILABLE AT HTTP://WWW.USPTO.GOV/EBC/EFS_HELP.HTML

APPLICANT HEREBY REQUESTS PARTICIPATION IN THE PCT-PPH PROGRAM AND PETITIONS TO MAKE THE ABOVE-IDENTIFIED APPLICATION SPECIAL UNDER THE PCT-PPH PROGRAM.

The above-identified application is (1) a national stage entry of the corresponding PCT application, or (2) a national stage entry of another PCT application which claims priority to the corresponding PCT application, or (3) a national application that claims domestic/ foreign priority to the corresponding PCT application, or (4) a national application which forms the basis for the priority claim in the corresponding PCT application, or (5) a continuing application of a U.S. application that satisfies one of (1) to (4) above, or (6) a U.S. application that claims domestic benefit to a U.S. provisional application which forms the basis for the priority claim in the corresponding PCT application.

The corresponding PCT application number(s) is/are: PCT/US2010/049317

The international date of the corresponding PCT application(s) is/are: September 17, 2010

I. List of Required Documents:

a. **A copy of the latest international work product (WO/ISA, WO/IPEA, or IPER) in the above–identified corresponding PCT application(s)**

☒ Is attached.

☐ Is not attached because the document is already in the U.S. application.

b. **A copy of all claims which were indicated as having novelty, inventive step and industrial applicability in the above-identified corresponding PCT application(s).**

☐ Is attached.

☒ Is not attached because the document is already in the U.S. application.

c. **English translations of the documents in a. and b. above are attached (if the documents are not in the English language). A statement that the English translation is accurate is attached for the document in b. above.**

This collection of information is required by 35 U.S.C. 119, 37 CFR 1.55, and 37 CFR 1.102(d). The information is required to obtain or retain a benefit by the public, which is to file (and by the USPTO to process) an application. Confidentiality is governed by 35 U.S.C. 122 and 37 CFR 1.11 and 1.14. This collection is estimated to take 2 hours to complete, including gathering, preparing, and submitting the completed application form to the USPTO. Time will vary depending upon the individual case. Any comments on the amount of time you require to complete this form and/or suggestions for reducing this burden should be sent to the Chief Information Officer, U.S. Patent and Trademark Office, U.S. Department of Commerce, P.O. Box 1450, Alexandria, VA 22313-1450. DO NOT SEND FEES OR COMPLETED FORMS TO THIS ADDRESS.

PTO/SB/20PCT-KR (06-10)
Approved for use through 01/31/2012. OMB 0651-0058
U.S.Patent and Trademark Office; U.S. DEPARTMENT OF COMMERCE
Under the Paperwork Reduction Act of 1995, no persons are required to respond to a collection of information unless it displays a valid OMB control number.

REQUEST FOR PARTICIPATION IN THE PCT-PPH PILOT PROGRAM BETWEEN THE KIPO AND THE USPTO

(continued)

Application No.:	12/884931
First Named Inventor:	ANDLE, Jeffrey C.

d. **(1) An information disclosure statement listing the documents cited in the international work products (ISR, WO/ISA, WO/IPEA, IPER) of the corresponding PCT application.**

☐ Is attached

☒ Has already been filed in the above-identified U.S. application on April 21, 2011

(2) Copies of all documents (except) for U.S. patents or U.S. patent application publications)

☐ Are attached.

Have already been filed in the above-identified U.S. application on _____

II. Claims Correspondence Table:

Claims in US Application	Patentable Claims in the corresponding PCT Application	Explanation regarding the correspondence
1-29	1-29	Identical

III. All the claims in the US application sufficiently correspond to the patentable claims in the corresponding PCT application.

Signature /David A. Rardin, Reg. No. 52,153/	Date May 3, 2011
Name (Print/Typed) David A. Rardin	Registration Number 52,153

Privacy Act Statement

The **Privacy Act of 1974 (P.L. 93-579)** requires that you be given certain information in connection with your submission of the attached form related to a patent application or patent. Accordingly, pursuant to the requirements of the Act, please be advised that: (1) the general authority for the collection of this information is 35 U.S.C. 2(b)(2); (2) furnishing of the information solicited is voluntary; and (3) the principal purpose for which the information is used by the U.S. Patent and Trademark Office is to process and/or examine your submission related to a patent application or patent. If you do not furnish the requested information, the U.S. Patent and Trademark Office may not be able to process and/or examine your submission, which may result in termination of proceedings or abandonment of the application or expiration of the patent.

The information provided by you in this form will be subject to the following routine uses:

1. The information on this form will be treated confidentially to the extent allowed under the Freedom of Information Act (5 U.S.C. 552) and the Privacy Act (5 U.S.C 552a). Records from this system of records may be disclosed to the Department of Justice to determine whether disclosure of these records is required by the Freedom of Information Act.
2. A record from this system of records may be disclosed, as a routine use, in the course of presenting evidence to a court, magistrate, or administrative tribunal, including disclosures to opposing counsel in the course of settlement negotiations.
3. A record in this system of records may be disclosed, as a routine use, to a Member of Congress submitting a request involving an individual, to whom the record pertains, when the individual has requested assistance from the Member with respect to the subject matter of the record.
4. A record in this system of records may be disclosed, as a routine use, to a contractor of the Agency having need for the information in order to perform a contract. Recipients of information shall be required to comply with the requirements of the Privacy Act of 1974, as amended, pursuant to 5 U.S.C. 552a(m).
5. A record related to an International Application filed under the Patent Cooperation Treaty in this system of records may be disclosed, as a routine use, to the International Bureau of the World Intellectual Property Organization, pursuant to the Patent Cooperation Treaty.
6. A record in this system of records may be disclosed, as a routine use, to another federal agency for purposes of National Security review (35 U.S.C. 181) and for review pursuant to the Atomic Energy Act (42 U.S.C. 218(c)).
7. A record from this system of records may be disclosed, as a routine use, to the Administrator, General Services, or his/her designee, during an inspection of records conducted by GSA as part of that agency's responsibility to recommend improvements in records management practices and programs, under authority of 44 U.S.C. 2904 and 2906. Such disclosure shall be made in accordance with the GSA regulations governing inspection of records for this purpose, and any other relevant (*i.e.*, GSA or Commerce) directive. Such disclosure shall not be used to make determinations about individuals.
8. A record from this system of records may be disclosed, as a routine use, to the public after either publication of the application pursuant to 35 U.S.C. 122(b) or issuance of a patent pursuant to 35 U.S.C. 151. Further, a record may be disclosed, subject to the limitations of 37 CFR 1.14, as a routine use, to the public if the record was filed in an application which became abandoned or in which the proceedings were terminated and which application is referenced by either a published application, an application open to public inspection or an issued patent.
9. A record from this system of records may be disclosed, as a routine use, to a Federal, State, or local law enforcement agency, if the USPTO becomes aware of a violation or potential violation of law or regulation.

UNITED STATES PATENT AND TRADEMARK OFFICE

UNITED STATES DEPARTMENT OF COMMERCE
United States Patent and Trademark Office
Address: COMMISSIONER FOR PATENTS
P.O. Box 1450
Alexandria, Virginia 22313-1450
www.uspto.gov

APPLICATION NO.	FILING DATE	FIRST NAMED INVENTOR	ATTORNEY DOCKET NO.	CONFIRMATION NO.
12/884,931	09/17/2010	Jeffrey C. Andle	VI060-US	7698

24222 7590 05/25/2011
Vern Maine & Associates
547 AMHERST STREET, 3RD FLOOR
NASHUA, NH 03063-4000

EXAMINER	
ART UNIT	PAPER NUMBER
2857	

NOTIFICATION DATE	DELIVERY MODE
05/25/2011	ELECTRONIC

Please find below and/or attached an Office communication concerning this application or proceeding.

The time period for reply, if any, is set in the attached communication.

Notice of the Office communication was sent electronically on above-indicated "Notification Date" to the following e-mail address(es):

patents@vernmaine.com
jjudkins@vernmaine.com

UNITED STATES PATENT AND TRADEMARK OFFICE

Commissioner for Patents
United States Patent and Trademark Office
P.O. Box 1450
Alexandria, VA 22313-1450
www.uspto.gov

Vern Maine & Associates
547 AMHERST STREET, 3RD FLOOR
NASHUA NH 03063-4000

In re Application of
ANDLE et al.
Application No.: 12/884,931
Filed: 17 September 2010
Attorney Docket No.: VI060-US
For: CONTROLLED COMPRESSIONAL WAVE COMPONENTS OF THICKNESS SHEAR MODE MULTI-MEASURAND SENSORS

: DECISION ON REQUEST TO
: PARTICIPATE IN THE PATENT
: PROSECUTION HIGHWAY
: PROGRAM AND PETITION
: TO MAKE SPECIAL UNDER
: 37 CFR 1.102(a)

This is a decision on the request to participate in the PCT Patent Prosecution Highway (PCT-PPH) pilot program and the petition under 37 CFR 1.102(a), filed 03 May 2011, to make the above-identified application special.

The request and petition are **GRANTED**.

Discussion

A grantable request to participate in the PCT-PPH pilot program and petition to make special require:

(1) The U.S. application must have an eligible relationship to one or more PCT applications where the ISA or IPEA are the JPO, EPO, KIPO, or USPTO;

(2) At least one claim in the PCT application has novelty, inventive step, and industrial applicability and must be free of any observations in Box VIII in the latest work product in the international stage or applicant must identify and explain why the claim(s) is/are not subject to the observation in Box VIII;

(3) Applicant must submit a copy of the claim(s) from the PCT application(s) that have novelty, inventive step, and industrial applicability along with an English translation thereof and a statement that the English translation is accurate, if the claims are not in the English language;

(4) All the claims in the U.S. application must sufficiently correspond or be amended to sufficiently correspond to the claim(s) that have novelty, inventive step, and industrial applicability in the PCT application(s);

(5) Examination of the U.S. application has not begun;

(6) Applicant must submit a copy of the latest international work product from the PCT application indicating that the claim(s) have novelty, inventive step, and industrial applicability along with an English translation thereof and a statement that the English translation is accurate if the latest international work product is not in the English language;

(7) Applicant must submit an IDS listing the documents cited by the PCT examiner in the international work product along with copies of documents except U.S. patents or U.S. patent application publications.

The request to participate in the PCT-PPH pilot program and petition comply with the above requirements. Accordingly, the above-identified application has been accorded "special" status.

Telephone inquiries concerning this decision should be directed to Lee W. Young at 571-272-4549.

All other inquiries concerning the examination or status of the application is accessible in the PAIR system at http://www.uspto.gov/ebc.index.html.

This application will be forwarded to the examiner for action on the merits commensurate with this decision once this application's formality reviews have been completed.

Lee W. Young
TQAS Technology Center 2800 - Semiconductors,
Electrical & Optical Systems & Components

UNITED STATES PATENT AND TRADEMARK OFFICE

Commissioner for Patents
United States Patent and Trademark Office
P.O. Box 1450
Alexandria, VA 22313-1450
www.uspto.gov

MAILED NOV 09 2010

MORGAN, LEWIS & BOCKIUS LLP (SF)
One Market, Spear Street Tower, Suite 2800
San Francisco CA 94105

In re Application of: Hashi et al. Application No.: 12/884955 Filed: September 17, 2010 Title: IMPLANTABLE MEDICAL DEVICE	DECISION ON PETITION TO MAKE SPECIAL FOR NEW APPLICATION UNDER 37 C.F.R. § 1.102 & M.P.E.P. § 708.02

This is a decision on the petition filed on September 17, 2010 to make the above-identified application special for accelerated examination procedure under 37 C.F.R. § 1.102(d).

The petition to make the application special is **DISMISSED**.

REGULATION AND PRACTICE

A grantable petition to make special under 37 C.F.R. § 1.102(d) and pursuant to the "Change to Practice for Petitions in Patent Applications to Make Special and for Accelerated Examination" published in the Federal Register on June 26, 2006 (71 Fed. Reg. 36323), must satisfy the following conditions:

I. Conditions Regarding the Application:

1. the application must be a non-reissue utility or design application filed under 37 CFR 1.111(a);

2. the application, the petition and the required fees must be filed electronically using the USPTO's electronic filing system (EFS), or EFS-web; if not filed electronically, a statement asserting that EFS and EFS-web were not available during the normal business hours.

3. at the time of filing, the application must be complete under 37 CFR 1.51 and in condition for examination;

4. the application must contain three or fewer independent claims and twenty or fewer total claims and the claims must be directed to a single invention.

II. Conditions Regarding the Petition:

The petition must:

1. be filed with the application;

2. include a statement that applicant agrees not to separately argue the patentability of any independent claim during any appeal in the application;

3. include a statement that applicant agrees to make an election without traverse in a telephone interview.

4. include a statement that applicant agrees to conduct such an interview when requested by the examiner.

5. include a statement, made based on a good faith belief, that a preexamination search in compliance with the following requirements, was conducted, including an identification of the field of search by United States class and subclass, where applicable, and for database searches, the search logic or chemical structure or sequence used as a query, the name of the file(s) searched and the database service, and the date of the search.

The preexamination search must:

5.1 involve U.S. patents and patent application publications, foreign patent documents, and non-patent literature, unless the applicant can justify with reasonable certainty that no references more pertinent than those already identified are likely to be found in the eliminated sources and includes such a justification with this statement;

5.2. be directed to the claimed invention and encompass all of the features of the claims, giving the claims the broadest reasonable interpretation;

5.3. encompass the disclosed features that may be claimed.

6. must provide in support of the petition an accelerated examination support document. An accelerated examination support document must include:

6.1. an information disclosure statement (IDS) in compliance with 37 CFR 1.98 citing each reference deemed most closely related to the subject matter of each of the claims;

6.2. an identification of all the limitations in the claims that are disclosed by the reference specifying where the limitation is disclosed in the cited reference;

6.3. a detailed explanation of how each of the claims are patentable over the references cited with particularity required by 37 CFR 1.111(b) and (c);

6.4. a concise statement of the utility of the invention as defined in each of the independent claims (unless the application is a design application);

6.5. a showing of where each limitation of the claims finds support under 35 U.S.C. 112, first paragraph, in the written description of the specification. If applicable, the showing must also identify: (1) each means- (or step) plus-function claim element that invokes consideration under 35 U.S.C. 112, sixth paragraph; and (2) the structure, material, or acts in the specification that corresponds to each means- (or step) plus-function claim element that invokes consideration under 35 U.S.C. 112, sixth paragraph; if the application claims the benefit of one or more applications under title 35, United States Code, the showing must also include where each limitation of the claims finds support under 35 U.S.C. 112, first paragraph, in each such application in which such supports exists;

6.6. an identification of any cited references that may be disqualified under 35 U.S.C. 103(c).

REVIEW OF FACTS

The conditions I:1-4, II: 1-5, 5.3, 6, 6.1, 6.2, 6.3, 6.4, 6.5 and 6.6 above are considered to have been met. However, the petition fails to comply with conditions II : 5.1 and 5.2, above. Therefore, the petition fails to meet the required conditions to be accorded special status under the accelerated examination procedure.

Discussion

When referring to "the petition" hereinbelow, the received papers under consideration include the PTO/SB/28 form, the "pre-examination search document" including pages 1-11; the "accelerated examination support document" (AESD) comprising pages 1-55, and an Information Disclosure Statement including form PTO/SB/08A.

Regarding the requirements of section II element 5.1 and 5.2 outlined above, it appears the search outlined in the petition omitted a critical search area by not searching in
class 623 subclass 1.42
class 425 subclass 145
class 424 subclass 443
class 514 subclass 54
class 427 subclasses 2.24, 402, 412, 498, and 512.

Petitioner is reminded that a supplemental accelerated examination support document is required if any new references that are deemed closer to the subject matter of at least one claim than the references provided in the AESD are found in the additional search.

DECISION

For the above-stated reasons, the petition is **dismissed**. The application will therefore be taken up by the examiner for action in its regular turn.

Petitioner is given a single opportunity to perfect the petition. Any request for reconsideration of this decision must be submitted within 1 (one) month or 30 (thirty) days, whichever is longer, (no extension of time under 37 CFR 1.136(a)) from the date of this decision in order to be considered timely. Any request for reconsideration must address all of the deficiencies indicated above.

Petitioner is reminded that, upon granting of the special status of the application on request for reconsideration, the application will be processed expeditiously. However, due to the dismissal of the instant petition, examination may not be completed within twelve months of the filing date of the application.

Any inquiry regarding this decision should be directed to Linda J. Sholl, TC 3700 Special Programs Examiner, at (571) 272-4391.

/Linda J. Sholl/
Linda J. Sholl
Special Programs Examiner
Technology Center 3700

UNITED STATES PATENT AND TRADEMARK OFFICE

Commissioner for Patents
United States Patent and Trademark Office
P.O. Box 1450
Alexandria, VA 22313-1450
www.uspto.gov

MORGAN, LEWIS & BOCKIUS LLP (SF)
One Market, Spear Street Tower, Suite 2800
San Francisco CA 94105

Mail Date: Feb. 14, 2011

In re Application of: Hashi et al. Application No.: 12/884955 Filed: September 19, 2010 Title: Implantable Medical Device	DECISION ON PETITION TO MAKE SPECIAL FOR NEW APPLICATION UNDER 37 C.F.R. § 1.102 & M.P.E.P. § 708.02

A decision dismissing the petition to make the above-identified application special for accelerated examination was mailed on November 19, 2010. The decision set a non-extendable time period of one month or 30 (thirty) days, whichever is longer, from its mailing date to correct the deficiency/deficiencies in the petition.

As of December 21, 2010, the expiry of the period set, neither a reply nor a renewed petition was received. Accordingly, the application is no longer eligible for the accelerated examination program.

The application will remain in its regular status and will be taken up by the examiner for action in its regular turn.

Petitioner is reminded that a single opportunity to perfect the petition is given. Therefore, further petitions for accelerated examination in this application will not be entertained.

Any inquiry regarding this decision should be directed to Linda J. Sholl, TC 3700 Special Program Examiner, at (571) 272-4391.

Linda J. Sholl
Special Program Examiner
Technology Center 3700

UNITED STATES PATENT AND TRADEMARK OFFICE

UNITED STATES DEPARTMENT OF COMMERCE
United States Patent and Trademark Office
Address: COMMISSIONER FOR PATENTS
P.O. Box 1450
Alexandria, Virginia 22313-1450
www.uspto.gov

APPLICATION NO.	FILING DATE	FIRST NAMED INVENTOR	ATTORNEY DOCKET NO.	CONFIRMATION NO.
12/885,110	09/17/2010	Jei-Ming CHEN	66007-213	8039

65358 7590 09/22/2011

WPAT, PC
INTELLECTUAL PROPERTY ATTORNEYS
7225 BEVERLY ST.
ANNANDALE, VA 22003

EXAMINER	
SWANSON, WALTER H	
ART UNIT	PAPER NUMBER
2823	

MAIL DATE	DELIVERY MODE
09/22/2011	PAPER

Please find below and/or attached an Office communication concerning this application or proceeding.

The time period for reply, if any, is set in the attached communication.

UNITED STATES PATENT AND TRADEMARK OFFICE

Commissioner for Patents
United States Patent and Trademark Office
P.O. Box 1450
Alexandria, VA 22313-1450
www.uspto.gov

WPAT, P.C.
INTELLECTUAL PROPERTY ATTORNEYS
7225 BEVERLY ST.
ANNANDALE, VA 22003

In re Application of Jei-Ming Chen et al.	:	
Appl. No.: 12/885,110	:	DECISION ON PETITION
Filed: September 17, 2010	:	UNDER 37 C.F.R. § 1.59
Attorney Docket No.: 66007-213	:	
For: STRESS-ADJUSTING METHOD OF MOS DEVICE	:	

This is a decision on the petition under 37 C.F.R. §1.59(b), filed August 15, 2011, to expunge information filed concurrently from the above-identified application.

The petition is DENIED.

Petitioner states that "[t]he material in the submitted envelope or container is considered as a trade secret or proprietary" and requests that "the submitted trade secret material be" be expunged from the record because petitioner believes that the material should not be found to be material to patentability. The required petition fee has been received.

Pursuant to M.P.E.P. § 724.05. I., "... Any such petition to expunge information submitted under MPEP § 724.02 should be submitted at the time of filing the information under MPEP § 724.02 and directed to the Technology Center (TC) to which the application is assigned. Such petition must contain:

(A) a clear identification of the information to be expunged without disclosure of the details thereof;
(B) a clear statement that the information to be expunged is trade secret material, proprietary material, and/or subject to a protective order, and that the information has not been otherwise made public;
(C) a commitment on the part of the petitioner to retain such information for the period of any patent with regard to which such information is submitted;
(D) a statement that the petition to expunge is being submitted by, or on behalf of, the party in interest who originally submitted the information;
(E) the fee as set forth in 37 CFR 1.17(g) for a petition under 37 CFR 1.59(b)."

The petition also does not satisfy conditions (B), (C) and (D) above for a grantable petition to expunge proprietary because there is no assertion the information sought to be expunged has not been made public, there is no a commitment on the part of the petitioner to retain such information for the period of any patent with regard to which such information is submitted and there is no statement that the petition to expunge is being submitted by, or on behalf of, the party in interest who originally submitted the information .

For the above-stated reasons, the petition to expunge is denied. The information submitted with the IDS on August 15, 2011 will remain in the file record.

Any inquiry regarding this decision should be directed to Hien H. Phan, Quality Assurance Specialist, at (571) 272-1606.

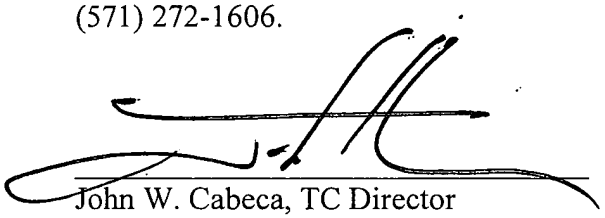

John W. Cabeca, TC Director
Technology Center 2800
Semiconductors, Electrical and Optical
Systems and Components

UNITED STATES PATENT AND TRADEMARK OFFICE

UNITED STATES DEPARTMENT OF COMMERCE
United States Patent and Trademark Office
Address: COMMISSIONER FOR PATENTS
P.O. Box 1450
Alexandria, Virginia 22313-1450
www.uspto.gov

APPLICATION NO.	FILING DATE	FIRST NAMED INVENTOR	ATTORNEY DOCKET NO.	CONFIRMATION NO.
12/885,110	09/17/2010	Jei-Ming CHEN	66007-213	8039

65358 7590 11/07/2011

WPAT, PC
INTELLECTUAL PROPERTY ATTORNEYS
7225 BEVERLY ST.
ANNANDALE, VA 22003

EXAMINER	
SWANSON, WALTER H	

ART UNIT	PAPER NUMBER
2823	

MAIL DATE	DELIVERY MODE
11/07/2011	PAPER

Please find below and/or attached an Office communication concerning this application or proceeding.

The time period for reply, if any, is set in the attached communication.

UNITED STATES PATENT AND TRADEMARK OFFICE

Commissioner for Patents
United States Patent and Trademark Office
P.O. Box 1450
Alexandria, VA 22313-1450
www.uspto.gov

WPAT, P.C.
INTELLECTUAL PROPERTY ATTORNEYS
7225 BEVERLY ST.
ANNANDALE, VA 22003

In re Application of Jei-Ming Chen et al.
Appl. No.: 12/885,110
Filed: September 17, 2010
Attorney Docket No.: 66007-213
For: STRESS-ADJUSTING METHOD OF MOS DEVICE

DECISION ON PETITION
UNDER 37 C.F.R. § 1.59

This is a decision on the renewed petition under 37 C.F.R. §1.59(b), filed September 26, 2011, to expunge information filed concurrently from the above-identified application.

The decision on the petition will be held in abeyance until allowance of the application or mailing of an Ex parte Quayle action or a Notice of Abandonment, at which time the petition will be decided.

The decision on the petition, as supplemented on September 26, 2011, is held in abeyance because prosecution on the merits has not completed. Accordingly, it is not appropriate to make a final determination of whether or not the material requested to be expunged is "material," with "materiality" being defined as any information which the examiner considers as being important to a determination of patentability of the claims. Thus, the decision on the petition to expunge must be held in abeyance at this time.

During prosecution on the merits, the examiner will determine whether or not the identified document is considered to be "material." If the information is not considered by the examiner to be material, the information will be removed from the official file.

Any inquiry regarding this decision should be directed to Hien H. Phan, Quality Assurance Specialist, at (571) 272-1606.

John W. Cabeca, TC Director
Technology Center 2800
Semiconductors, Electrical and Optical
Systems and Components

UNITED STATES PATENT AND TRADEMARK OFFICE

UNITED STATES DEPARTMENT OF COMMERCE
United States Patent and Trademark Office
Address: COMMISSIONER FOR PATENTS
P.O. Box 1450
Alexandria, Virginia 22313-1450
www.uspto.gov

APPLICATION NO.	FILING DATE	FIRST NAMED INVENTOR	ATTORNEY DOCKET NO.	CONFIRMATION NO.
12/885,147	09/17/2010	Torsten Kludas	025714-009800US	8116

20350 7590 01/27/2011
KILPATRICK TOWNSEND & STOCKTON LLP
TWO EMBARCADERO CENTER
EIGHTH FLOOR
SAN FRANCISCO, CA 94111-3834

EXAMINER	
FULTON, CHRISTOPHER W	
ART UNIT	**PAPER NUMBER**
2841	

NOTIFICATION DATE	DELIVERY MODE
01/27/2011	ELECTRONIC

Please find below and/or attached an Office communication concerning this application or proceeding.

The time period for reply, if any, is set in the attached communication.

Notice of the Office communication was sent electronically on above-indicated "Notification Date" to the following e-mail address(es):

Docket@kilpatricktownsend.com
ipefiling@kilpatricktownsend.com
jlhice@kilpatrick.foundationip.com

UNITED STATES PATENT AND TRADEMARK OFFICE

Commissioner for Patents
United States Patent and Trademark Office
P.O. Box 1450
Alexandria, VA 22313-1450
www.uspto.gov

**KILPATRICK TOWNSEND &
STOCKTON LLP
TWO EMBARCADERO CENTER
EIGHTH FLOOR
SAN FRANCISCO CA 94111-3834**

In re Application of	**: DECISION ON REQUEST TO**
KLUDAS et al.	**: PARTICIPATE IN THE PATENT**
Application No.: 12/885,147	**: PROSECUTION HIGHWAY**
Filed: 17 September 2010	**: PROGRAM AND PETITION**
Attorney Docket No.: 025714-009800US	**: TO MAKE SPECIAL UNDER**
For: SURVEYING INSTRUMENT AND A METHOD THEREFOR	**: 37 CFR 1.102(a)**

This is a decision on the request to participate in the Patent Prosecution Highway (PPH) program and the petition under 37 CFR 1.102(a), filed 08 December 2010, to make the above-identified application special.

The request and petition are **DISMISSED**.

Discussion

A grantable request to participate in the PPH program and petition to make special require:

1. The U.S. application is

   a. a Paris Convention application which either
      i. validly claims priority under 35 U.S.C. 119(a) and 37 CFR 1.55 to one or more applications filed in the DPMA, or
      ii. validly claims priority to a PCT application that contains no priority claims,

   or

   b. a national stage application under the PCT (an application which entered the national stage in the U.S. from a PCT international application after compliance with 35 U.S.C. 371), which PCT application
      i. validly claims priority to an application filed in the DPMA, or
      ii. validly claims priority to a PCT application that contains no priority claims, or
      iii. contains no priority claim,

   or

   c. a so-called bypass application filed under 35 U.S.C. 111(a) which validly claims benefit under 35 U.S.C. 120 to a PCT application, which PCT application
      i. validly claims priority to an application filed in the DPMA, or

ii. validly claims priority to a PCT application that contains no priority claims, or
iii. contains no priority claim;

2. Applicant must submit a copy of:
   a. The allowable/patentable claim(s) from the DPMA application(s), and
   b. An English translation of the allowable/patentable claim(s), and
   c. A statement that the English translation is accurate;
3. Applicant must:
   a. Ensure all the claims in the U.S. application must sufficiently correspond or be amended to sufficiently correspond to the allowable/patentable claim(s) in the DPMA application(s), and
   b. Submit a claims correspondence table in English;
4. Examination of the U.S. application has not begun;
5. Applicant must submit:
   a. Documentation of prior office action:
      i. a copy of all office actions from each of the DPMA application(s) containing the allowable/patentable claim(s), and
      ii. a copy of any office action which is relevant to patentability from the DPMA application(s) issued after grant of the request to participate in the PPH pilot program, and
   b. An English language translation of the DPMA office action from (5)(a)(i)-(ii) above, and
   c. A statement that the English translation is accurate;
6. Applicant must submit:
   a. An IDS listing the documents cited by the DPMA examiner in the DPMA office action (unless already submitted in this application), and
   b. Copies of the documents except U.S. patents or U.S. patent application publications (unless already submitted in this application);

Conditions (1-2) and (4-7) above are considered to have been met. However, the request to participate in the PPH pilot program and petition does not appear to meet condition (3).

Regarding the requirement of condition (3), applicant has failed to ensure that all claims of the instant application sufficiently correspond to the allowed/patentable claims of the DPMA application. For example only, claim 1 of the instant application requires the component to be "mounted on the mounting unit" and outputting the "inclination data of the measuring system" while claim 1 of the DPMA application required the component to be "arranged at the mounting unit" and outputting the "selected inclination data." These limitation have different scope.

Applicant is given **ONE** opportunity within a time period of **ONE MONTH or THIRTY DAYS**, whichever is longer, from the mailing date of this decision to correct the deficiencies. **NO EXTENSION OF TIME UNDER 37 CFR 1.136 IS PERMITTED.** If the deficiencies are not corrected with the time period given, the application will await action in its regular turn.

Response must be filed via the Electronic Filing System (EFS) with the Document Description: Petition to make special under Patent Pros Hwy. Any preliminary amendments and IDS submitted with the PPH documents must be separately indexed as a preliminary amendment and IDS, respectively.

Telephone inquiries concerning this decision should be directed to Lee W. Young at 571-272-4549.

All other inquiries concerning the examination or status of the application is accessible in the PAIR system at http://www.uspto.gov/ebc/index.html.

Lee W. Young
TQAS Technology Center 2800 - Semiconductors,
Electrical & Optical Systems & Components

Doc Code: PET.GREEN
Document Description: Petition for Green Tech Pilot

PTO/SB/420 (11-10)
Approved for use through 01/31/2011. OMB 0651-0062
U.S. Patent and Trademark Office; U. S. DEPARTMENT OF COMMERCE
Under the Paperwork Reduction Act of 1995, no persons are required to respond to a collection of information unless it displays a valid OMB control number.

PETITION TO MAKE SPECIAL UNDER THE GREEN TECHNOLOGY PILOT PROGRAM

Attorney Docket Number: 83161587	Application Number (if known): 12/885,208	Filing date: September 17, 2010
First Named Inventor: Eric Krengel		
Title: FUEL-BASED INJECTION CONTROL		

APPLICANT HEREBY REQUESTS TO PARTICIPATE IN THE GREEN TECHNOLOGY PILOT PROGRAM FOR THE ABOVE-IDENTIFIED APPLICATION. See Instruction Sheet on page 2.

This petition must be timely filed electronically using the USPTO electronic filing system, EFS-Web.

1. By filing this petition:

   Applicant is requesting early publication: Applicant hereby requests early publication under 37 CFR 1.219 and the publication fee set forth in 37 CFR 1.18(d) accompanies this request.

2. By filing this petition: applicant is agreeing to make an election without traverse in a telephonic interview and elect an invention that meets the eligibility requirements for the Green Technology Pilot Program, if the Office determines that the claims are not obviously directed to a single invention. See Instruction Sheet.

3. This request is accompanied by statements of special status for the eligibility requirement.

4. The application contains no more than three (3) independent claims and twenty (20) total claims.

5. The application does not contain any multiple dependent claims.

6. Other attachments: _____

Signature /Donald J. Lewis/	Date April 13, 2011
Name (Print/Typed) Donald J. Lewis	Registration Number 55,813

Note: *Signatures of all the inventors or assignees of record of the entire interest or their representative(s) are required in accordance with 37 CFR 1.33 and 11.18. Please see 37 CFR 1.4(d) for the form of the signature. If necessary, submit multiple forms for more than one signature see below*.*

[X] *Total of 1 forms are submitted.

The information is required to obtain or retain a benefit by the public which is to file (and by the USPTO to process) an application. Confidentiality is governed by 35 U.S.C. 122 and 37 CFR 1.11 and 1.14. This collection is estimated to take 12 hours to complete, including gathering, preparing, and submitting the completed application form to the USPTO. Time will vary depending upon the individual case. Any comments on the amount of time you require to complete this form and/or suggestions for reducing this burden, should be sent to the Chief Information Officer, U.S. Patent and Trademark Office, U.S. Department of Commerce, P.O. Box 1450, Alexandria, VA 22313-1450. DO NOT SEND FEES OR COMPLETED FORMS TO THIS ADDRESS. **SEND TO: Commissioner for Patents, P.O. Box 1450, Alexandria, VA 22313-1450.**

If you need assistance in completing the form, call 1-800-PTO-9199 and select option 2.

IN THE UNITED STATES PATENT AND TRADEMARK OFFICE

Applicants	:	Eric Krengel et al.
Application No.	:	12/885,208
Filed	:	September 17, 2010
Title	:	FUEL-BASED INJECTION CONTROL
Group Art Unit	:	3747
Confirmation No.	:	8249
Docket No.	:	83161587

Commissioner for Patents
P.O. Box 1450
Alexandria, VA 22313-1450

CERTIFICATE OF TRANSMISSION

I hereby certify that this correspondence is being transmitted via the U.S. Patent and Trademark Office electronic filing system (EFS-Web) to the USPTO on:

April 13, 2011	/Angie C. Farr/
Date	Angie C. Farr

STATEMENTS OF SPECIAL STATUS

Applicants respectfully request consideration of the following statement concerning the basis for the special status as well as the following statement pertaining to the materiality standard.

I. Statement concerning the basis for special status.

Applicants submit that special status is sought on the following bases: (1) the claimed invention materially contributes to the more efficient utilization and conservation of energy resources; and/or (2) the claimed invention materially contributes to greenhouse gas emission reduction; and/or (3) the claimed invention materially enhances the quality of the environment.

II. Statement pertaining to the materiality standard.

As a preliminary matter, Applicants note that the following statement refers explicitly to the elements of independent claim 1, which is the broadest claim in many respects.

Regarding basis (1), Applicants submit that the claimed invention materially contributes to the more efficient utilization and conservation of energy resources by improving fuel economy (*e.g.*, more efficiently utilizing and conserving fossil fuels). Specifically, the claimed invention adjusts a split ratio of multiple fuel injections based on an alcohol content of fuel for an engine to more effectively evaporate the fuel, thus improving fuel economy. As explained in the Background and Summary of the subject application, alternate fuels, such as alcohol and alcohol-based fuels, have been developed to reduce the consumption of traditional fuels. Various approaches may be used to control such alcohol-fuelled engines, including adjustment of boost or spark timing in dependence upon an alcohol content of the engine fuel, and various other engine operating conditions. For example, by advancing the injection timing and/or injecting a larger fraction of fuel in an earlier injection based on an alcohol content of the fuel, the charge cooling effect of the alcohol fuel may be used to improve the peak torque output of the engine.

However, during an engine cold-start, when the temperature conditions of the engine are already not hot enough for an efficient combustion, advancing the injection timing responsive to an increase in fuel alcohol content may further cool the system and significantly reduce the efficiency of fuel evaporation and the formation of a homogeneous air-fuel mixture. Injecting a larger fraction of fuel in an earlier injection may further degrade fuel evaporation efficiency. Additionally, the charge cooling effect of the alcohol fuel on the intake system may further lower the air-charge temperature at cold-start conditions thereby further degrading combustion stability and increasing potential for engine misfire. As such, this may lead to reduced fuel economy and degraded cold-start exhaust emissions. The claimed invention addresses this issue by providing a method for adjusting the split ratio of multiple fuel injections. For example, claim 1 recites:

> A method of operating an engine cylinder including a direct fuel injector, comprising,
>
> during an engine cold start,
>
> direct injecting at least some fuel in a compression stroke of the engine and at least some fuel in an intake stroke of the engine; and
>
> decreasing a ratio of intake stroke fuel to compression stroke fuel as an alcohol content of the injected fuel increases.

By performing multiple injections and adjusting the split ratio of the multiple injections based on the alcohol content of the injected fuel, engine combustion, particularly during engine cranking, may be improved. Specifically, by increasing the proportion of fuel injected in the compression stroke as the alcohol content of the fuel increases, the higher air-charge temperature and higher valve temperature of the engine cylinders during the compression stroke may be advantageously used to more effectively evaporate the directly injected alcohol fuel and form a homogenous air-fuel mixture. In this way, the engine's ability to start with alcohol fuels may be improved. Additionally, by evaporating most of the injected fuel, less fuel may be lost during engine operation, and the need for larger or pilot fuel injections at engine cold-start may be reduced or eliminated. As such, this provides fuel savings as less fuel will be wasted at cold start conditions.

Regarding basis (2), Applicants submit that the claimed invention materially contributes to greenhouse gas emission reduction as follows. CO_2 is a greenhouse gas produced by the combustion of fossil fuels. As explained above and set forth in claim 1, the claimed invention improves fuel economy, thus reducing the combustion of fossil fuels and lowering CO_2 emissions.

Regarding basis (3), Applicants submit that the claimed invention materially enhances the quality of the environment by reducing exhaust emissions, which negatively impact the quality of the environment. As explained above and set forth in claim 1, the claimed invention improves the atomization and mixing of the injected alcohol with the air charge. Therefore, substantially all the injected fuel may be evaporated and fuel residuals may be reduced, thereby improving engine cold-start exhaust emissions. Specifically, less unburned fuel species are released when more fuel is vaporized during a cold start.

Please charge any cost incurred in this filing, along with any other costs, to Deposit Account No. 06-1510.

Respectfully submitted,

ALLEMAN HALL MCCOY RUSSELL & TUTTLE LLP

/Donald J. Lewis/
Donald J. Lewis
Registration No. 55,813
Customer No. 36865
Attorney/Agent for Applicants/Assignee
806 S.W. Broadway, Suite 600
Portland, Oregon 97205
Telephone: (503) 459-4141
Facsimile: (503) 459-4142

UNITED STATES PATENT AND TRADEMARK OFFICE

UNITED STATES DEPARTMENT OF COMMERCE
United States Patent and Trademark Office
Address: COMMISSIONER FOR PATENTS
P.O. Box 1450
Alexandria, Virginia 22313-1450
www.uspto.gov

APPLICATION NO.	FILING DATE	FIRST NAMED INVENTOR	ATTORNEY DOCKET NO.	CONFIRMATION NO.
12/885,208	09/17/2010	Eric Krengel	83161587	8249

36865 7590 05/04/2011

ALLEMAN HALL MCCOY RUSSELL & TUTTLE, LLP
806 S.W. BROADWAY, SUITE 600
PORTLAND, OR 97205

EXAMINER	
ART UNIT	PAPER NUMBER
3747	

MAIL DATE	DELIVERY MODE
05/04/2011	PAPER

Please find below and/or attached an Office communication concerning this application or proceeding.

The time period for reply, if any, is set in the attached communication.

UNITED STATES PATENT AND TRADEMARK OFFICE

Commissioner for Patents
United States Patent and Trademark Office
P.O. Box 1450
Alexandria, VA 22313-1450
www.uspto.gov

ALLEMAN HALL MCCOY RUSSELL &
TUTTLE, LLP
806 S.W. BROADWAY, SUITE 600
PORTLAND OR 97205

In re Application of		
KRENGEL, ERIC et al	:	DECISION ON PETITION
Application No. 12/885,208	:	TO MAKE SPECIAL UNDER
Filed: Sep. 17, 2010	:	THE GREEN TECHNOLOGY
Attorney Docket No. 83161587	:	PILOT PROGRAM

This is a decision on the petition under 37 CFR 1.102, filed April 13, 2011, to make the above-identified application special under the pilot program for applications pertaining to Green Technologies as set forth in 74 Federal Register Notice 64666 (December 8, 2009) and amended by 75 Federal Register Notice 28554 (May 21, 2010) and 75 Federal Register Notice 69049 (November 10, 2010).

The petition is **dismissed**.

A grantable petition to make an application special under 37 CFR 1.102 and the pilot program as set forth in 74 FR 64666 must be directed to a nonprovisional application filed under 35 USC 111(a) or be a national stage entry under 35 USC 371, exclusive of any reissue applications.

If reconsideration of this decision is desired, a petition for reconsideration must be filed within ONE (1) MONTH OR THIRTY (30) DAYS from the mail date of this decision, whichever is longer. No extension of this time limit can be granted under 37 CFR 1.136(a) or (b). The petition for reconsideration should include an exhaustive attempt to provide the lacking item(s) noted below, since, after a decision on the petition for reconsideration, no further reconsideration or review of the matter will be undertaken by the Director.

In order to qualify for special status, the following requirements must be met. 1) The application must have no more than 3 independent claims and no more than 20 total claims. 2) The application must not contain any multiple dependent claims. 3) The petition must state the basis for seeking special status, i.e., the claimed invention either: A) materially enhances the quality of the environment or B) materially contributes to: i) the discovery or development of renewable energy resources, ii) the more efficient utilization and conservation of energy resources, or iii) greenhouse gas emission reduction. 4) If the disclosure is not clear on its face that the claimed invention materially contributes under category (A) or (B), the petition must be accompanied by a statement by the applicant, assignee, or an attorney/agent registered to practice before the

Office explaining how the materiality standard is met. 5) A statement that applicant will agree to make an election without traverse in a telephonic interview if a restriction requirement is made by the examiner. 6) The petition to make special must be filed electronically. 7) The petition must be filed at least one day prior to the date that a first Office Action appears in the Patent Application Information Retrieval (PAIR) system. 8) The petition must be accompanied by a request for early publication in compliance with 37 CFR 1.219 and include the publication fee as set forth in 37 CFR 1.18(d).

The requirement for a fee for consideration of the petition to make special for applications pertaining to Green Technologies has been waived. The petition lacks item # 4.

In regard to item 4, petitioner should note that the instant petition includes a statement identifying the basis for the special status (i.e., whether the instant invention (1) materially enhances the quality of the environment or materially contributes to (2) development of renewable energy resources or energy conservation, or (3) greenhouse gas reduction) as required by sections II and III of the notice. However, as stated in the notice, applicant must also provide a statement pertaining to the materiality standard if the application disclosure is not clear on its face as to the materiality of the basis for the special status of the invention. This petition lacks such a statement and it is not agreed that the application on its face meets that materiality standard. Petitioner states that the claimed invention relates to green technologies. This is not convincing. For example, it is not clear how the claimed computer floppy disk with software instructions and an injector with a single engine cylinder will provide and enhance the quality of the environment or contribute to development of renewable energy resources or energy conservation or greenhouse gas reduction. It is also not clear where and what the structural connection is between the single cylinder and the computer floppy disk. The claimed "controller" is nothing but a computer floppy disk which has nothing to do with green technology.

Any reconsideration of this decision should be submitted through the USPTO electronic filing system, EFS-Web, and selecting the document description of "Petition for Green Tech Pilot" on the EFS-Web screen.

Telephone inquiries concerning this decision should be directed to Henry C. Yuen at 571-272-4856.

The application will be forwarded to the Technology Center Art Unit 3747 for action in its regular turn.

/Henry C. Yuen/

Henry C. Yuen
Quality Assurance Specialist
Technology Center 3700

IN THE UNITED STATES PATENT AND TRADEMARK OFFICE

Applicants	:	Eric Krengel et al.
Application No.	:	12/885,208
Filed	:	September 17, 2010
Title	:	FUEL-BASED INJECTION CONTROL
Group Art Unit	:	3747
Confirmation No.	:	8249
Docket No.	:	83161587

Commissioner for Patents
P.O. Box 1450
Alexandria, VA 22313-1450

CERTIFICATE OF TRANSMISSION

I hereby certify that this correspondence is being transmitted via the U.S. Patent and Trademark Office electronic filing system (EFS-Web) to the USPTO on:

June 6, 2011
Date

Caitlin Fackrell
Caitlin Fackrell

REQUEST FOR RECONSIDERATION

Responsive to the denial of Applicants' Petition under 37 CFR 1.102 filed April 13, 2011, Applicants respectfully request consideration of the following statement explaining how the materiality standard is met to satisfy requirement #4.

Statement of Facts

1. Applicants filed a Petition under 37 CFR 1.102 on April 13, 2011 (hereinafter referred to as "the Petition"), to make the subject application special under the pilot program for applications pertaining to Green Technologies.
2. In a Decision on Petition mailed May 4, 2011, the Petition was dismissed as lacking item #4, *i.e.*, failing to include a statement pertaining to the materiality standard. As best understood by Applicants, the statement pertaining to the materiality standard included in the Petition was not accepted as the Office requires clarification on how the invention as claimed meets the materiality standard.

3. By way of this Request for Reconsideration, Applicants provide a revised statement pertaining to the materiality standard.

Basis of the Petition

Applicants respectfully request consideration of the following revised statement pertaining to the materiality standard.

Applicants submit that special status is sought on the following bases: (1) the claimed invention materially contributes to the more efficient utilization and conservation of energy resources; and/or (2) the claimed invention materially contributes to greenhouse gas emission reduction; and/or (3) the claimed invention materially enhances the quality of the environment.

As a preliminary matter, Applicants note that the following statement refers explicitly to the elements of independent claim 1, which is the broadest claim in many respects.

Regarding basis (1), Applicants submit that the claimed invention materially contributes to the more efficient utilization and conservation of energy resources by improving fuel economy (*e.g.*, more efficiently utilizing and conserving fossil fuels). Specifically, the claimed invention injects fuel in both the compression and intake strokes during cold engine starts, and adjusts the ratio of the injections based on an alcohol content of the fuel. This results in more effective fuel evaporation even as the alcohol content of the fuel changes, leading to a more homogenous air-fuel mixture, and thus more efficient combustion, improving fuel economy. As explained in the Background and Summary of the subject application, alternate fuels, such as alcohol and alcohol-based fuels, have been developed to reduce the consumption of traditional fuels. Various approaches may be used to control such alcohol-fuelled engines, including adjustment of boost or spark timing in dependence upon an alcohol content of the engine fuel, and various other engine operating conditions. For example, by advancing the injection timing and/or injecting a larger fraction of fuel in an earlier injection based on an alcohol content of the fuel, the charge cooling effect of the alcohol fuel may be used to improve the peak torque output of the engine.

However, during an engine cold-start, when the temperature conditions of the engine are already not hot enough for an efficient combustion, advancing the injection timing responsive to an increase in fuel alcohol content may further cool the system and significantly reduce the efficiency of fuel evaporation and the formation of a homogeneous air-fuel mixture. Injecting a larger fraction of fuel in an earlier injection may further degrade fuel evaporation efficiency. Additionally, the charge cooling effect of the alcohol fuel on the intake system may further lower the air-charge temperature at cold-start conditions thereby further degrading combustion stability and increasing potential for engine misfire. As such, this may lead to reduced fuel economy and degraded cold-start exhaust emissions. The claimed invention addresses this issue by adjusting the split ratio of multiple fuel injections based on the alcohol content of the fuel. For example, claim 1 recites:

> A method of operating an engine cylinder including a direct fuel injector, comprising,
> during an engine cold start,
> direct injecting at least some fuel in a compression stroke of the engine and at least some fuel in an intake stroke of the engine; and
> decreasing a ratio of intake stroke fuel to compression stroke fuel as an alcohol content of the injected fuel increases.

By performing multiple injections and adjusting the split ratio of the multiple injections based on the alcohol content of the injected fuel, engine combustion, particularly during engine cranking, may be improved. Specifically, by increasing the proportion of fuel injected in the compression stroke as the alcohol content of the fuel increases, the higher air-charge temperature and higher valve temperature of the engine cylinders during the compression stroke may be advantageously used to more effectively evaporate the directly injected alcohol fuel and form a homogenous air-fuel mixture. In this way, the engine's ability to start with alcohol fuels may be improved. Additionally, by evaporating most of the injected fuel, less fuel may be lost during engine operation, and the need for larger or pilot fuel injections at engine cold-start may be reduced or eliminated. As such, this provides fuel savings as less fuel will be wasted at cold start conditions.

Regarding basis (2), Applicants submit that the claimed invention materially contributes to greenhouse gas emission reduction as follows. CO_2 is a greenhouse gas produced by the combustion of fossil fuels. As explained above and set forth in claim 1, the claimed invention improves fuel economy by more effectively evaporating alcohol fuel during cold start conditions, thus reducing the combustion of fossil fuels and lowering CO_2 emissions.

Regarding basis (3), Applicants submit that the claimed invention materially enhances the quality of the environment by reducing exhaust emissions, which negatively impact the quality of the environment. As explained above and set forth in claim 1, the claimed invention improves the atomization and mixing of the injected alcohol with the air charge. Therefore, substantially all the injected fuel may be evaporated and fuel residuals may be reduced, thereby improving engine cold-start exhaust emissions. Specifically, less unburned fuel species are released when more fuel is vaporized during a cold start.

Request for Relief

For the above reasons, Applicants respectfully request reconsideration of the Petition under 37 CFR 1.102 filed April 13, 2011 to make the subject application special under the pilot program for applications pertaining to Green Technologies.

Please charge any cost incurred in the filing of this Request for Reconsideration, along with any other costs, to Deposit Account No. 06-1510.

Respectfully submitted,

ALLEMAN HALL MCCOY RUSSELL & TUTTLE LLP

John D. Russell
Registration No. 47,048
Customer No. 36865
Attorney/Agent for Applicants/Assignee
806 S.W. Broadway, Suite 600
Portland, Oregon 97205
Telephone: (503) 459-4141
Facsimile: (503) 459-4142

UNITED STATES PATENT AND TRADEMARK OFFICE

UNITED STATES DEPARTMENT OF COMMERCE
United States Patent and Trademark Office
Address: COMMISSIONER FOR PATENTS
P.O. Box 1450
Alexandria, Virginia 22313-1450
www.uspto.gov

APPLICATION NO.	FILING DATE	FIRST NAMED INVENTOR	ATTORNEY DOCKET NO.	CONFIRMATION NO.
12/885,208	09/17/2010	Eric Krengel	83161587	8249

36865 7590 06/30/2011

ALLEMAN HALL MCCOY RUSSELL & TUTTLE, LLP
806 S.W. BROADWAY, SUITE 600
PORTLAND, OR 97205

EXAMINER	
ART UNIT	PAPER NUMBER
3747	

MAIL DATE	DELIVERY MODE
06/30/2011	PAPER

Please find below and/or attached an Office communication concerning this application or proceeding.

The time period for reply, if any, is set in the attached communication.

UNITED STATES PATENT AND TRADEMARK OFFICE

Commissioner for Patents
United States Patent and Trademark Office
P.O. Box 1450
Alexandria, VA 22313-1450
www.uspto.gov

ALLEMAN HALL MCCOY RUSSELL & TUTTLE, LLP
806 S.W. BROADWAY, SUITE 600
PORTLAND OR 97205

JUN 30 2011

In re Application of :
Krengel et al. :
Application No. 12/885,208 :
Filed: 9/17/2010 :
Attorney Docket No. **83161587** :

DECISION ON PETITION
TO MAKE SPECIAL UNDER
THE GREEN TECHNOLOGY
PILOT PROGRAM

This is a decision on the request for reconsideration, filed 6/6/2011, to make the above-identified application special under the pilot program for applications pertaining to Green Technologies as set forth in 74 Federal Register Notice 64666 (December 8, 2009) and amended by 75 Federal Register Notice 28554 (May 21, 2010) and 75 Federal Register Notice 69049 (November 10, 2010).

The petition is **GRANTED**.

A grantable petition to make an application special under 37 CFR 1.102 and the pilot program as set forth in 74 FR 64666 must be directed to a nonprovisional application filed under 35 USC 111(a) or be a national stage entry under 35 USC 371, exclusive of any reissue applications.

In order to qualify for special status, the following requirements must be met. 1) The application must have no more than 3 independent claims and no more than 20 total claims. 2) The application must not contain any multiple dependent claims. 3) The petition must state the basis for seeking special status, i.e., the claimed invention either: A) materially enhances the quality of the environment or B) materially contributes to: i) the discovery or development of renewable energy resources, ii) the more efficient utilization and conservation of energy resources, or iii) greenhouse gas emission reduction. 4) If the disclosure is not clear on its face that the claimed invention materially contributes under category (A) or (B), the petition must be accompanied by a statement by the applicant, assignee, or an attorney/agent registered to practice before the Office explaining how the materiality standard is met. 5) A statement that applicant will agree to make an election without traverse in a telephonic interview if a restriction requirement is made by the examiner. 6) The petition to make special must be filed electronically. 7) The petition must be filed at least one day prior to the date that a first Office Action appears in the Patent Application Information Retrieval (PAIR) system. 8) The petition must be accompanied by a request for early publication in compliance with 37 CFR 1.219 and include the publication fee as set forth in 37 CFR 1.18(d).

The requirement for a fee for consideration of the petition to make special for applications pertaining to Green Technologies has been waived.

The instant petition complies with items 1 – 8 above. Accordingly, the above-identified application has been accorded "special" status.

Telephone inquires concerning this decision should be directed to Tom Dunn at 571-272-1171.

The application is being forwarded to the Technology Center Art Unit 3747 for action on the merits commensurate with this decision.

/Tom Dunn/

Tom Dunn
Quality Assurance Specialist
Technology Center 1700

UNITED STATES PATENT AND TRADEMARK OFFICE

Commissioner for Patents
United States Patent and Trademark Office
P.O. Box 1450
Alexandria, VA 22313-1450
www.uspto.gov

MAILED

JAN 03 2011

OFFICE OF PETITIONS

ROPES & GRAY LLP
IPRM - Floor 43
PRUDENTIAL TOWER
800 BOYLSTON STREET
BOSTON MA 02199-3600

In re Application of	:	
Souhile Assaf, et al.	:	
Application No. 12/885,223	:	DECISION ON PETITION
Filed: September 17, 2010	:	TO WITHDRAW
Attorney Docket No. 105558-0002-102	:	FROM RECORD
	:	

This is a decision on the Request to Withdraw as attorney or agent of record under 37 C.F.R. § 1.36(b), filed December 8, 2010.

The request is **APPROVED**.

A grantable request to withdraw as attorney/agent of record must be signed by every attorney/agent seeking to withdraw or contain a clear indication that one attorney is signing on behalf of another/others. A request to withdraw will not be approved unless at least 30 (thirty) days would remain between the date of approval and the later of the expiration date of a time to file a response or the expiration date of the maximum time period which can be extended under 37 C.F.R. § 1.136(a).

The request was signed by Hannah R. Koyfman on behalf of all attorneys of record. All attorneys/agents have been withdrawn. Applicant is reminded that there is no attorney of record at this time.

All future correspondence will be directed to the first named inventor Souhile Assaf at the address indicated below.

Telephone inquiries concerning this decision should be directed to Terri Johnson at 571-272-2991.

/Terri Johnson/
Terri Johnson
Petitions Examiner
Office of Petitions

cc: **Souhile Assaf**
700 Collip Circle, Suite 116
London, Ontario N6G 4X8
Canada

UNITED STATES PATENT AND TRADEMARK OFFICE

UNITED STATES DEPARTMENT OF COMMERCE
United States Patent and Trademark Office
Address: COMMISSIONER FOR PATENTS
P.O. Box 1450
Alexandria, Virginia 22313-1450
www.uspto.gov

APPLICATION NUMBER	FILING OR 371(C) DATE	FIRST NAMED APPLICANT	ATTY. DOCKET NO./TITLE
12/885,223	09/17/2010	Souhile Assaf	105558-0002-102

CONFIRMATION NO. 8280

POWER OF ATTORNEY NOTICE

28120
ROPES & GRAY LLP
IPRM - Floor 43
PRUDENTIAL TOWER
800 BOYLSTON STREET
BOSTON, MA 02199-3600

OC000000045234588

Date Mailed: 01/03/2011

NOTICE REGARDING CHANGE OF POWER OF ATTORNEY

This is in response to the Power of Attorney filed 12/08/2010.

- The withdrawal as attorney in this application has been accepted. Future correspondence will be mailed to the new address of record. 37 CFR 1.33.

/tsjohnson/

Office of Data Management, Application Assistance Unit (571) 272-4000, or (571) 272-4200, or 1-888-786-0101

UNITED STATES PATENT AND TRADEMARK OFFICE

Commissioner for Patents
United States Patent and Trademark Office
P.O. Box 1450
Alexandria, VA 22313-1450
www.uspto.gov

In re Application of
Michael L. Rohan

Application No. 12885227

Filed: September 17,2010

Attorney Docket No. RIVT-000211

:
:
:DECISION ON PETITION TO MAKE SPECIAL
:UNDER 37 CFR 1.102(c)(1)
:

This is a decision on the electronic petition under 37 CFR 1.102 (c)(1), filed 13-SEP-2011 to make the above-identified application special based on applicant's age as set forth in MPEP § 708.02, Section IV.

The petition is **GRANTED**.

A grantable petition to make an application special under 37 CFR 1.102(c)(1), MPEP § 708.02, Section IV: Applicant's Age must include a statement by applicant or a registered practitioner having evidence that applicant is at least 65 years of age. No fee is required.

Accordingly, the above-identified application has been accorded "special" status and will be taken up for action by the examiner upon the completion of all pre-examination processing.

Telephone inquiries concerning this electronic decision should be directed to the Electronic Business Center at 866-217-9197.

All other inquiries concerning either the examination or status of the application should be directed to the Technology Center.

Doc code : PET.OP.AGE
Description : Petition to make special based on Age/Health

PTO/SB/130 (07-09)
Approved for use through 07/31/2012. OMB 0651- 0031
U.S. Patent and Trademark Office; U.S. DEPARTMENT OF COMMERCE
Under the Paperwork Reduction Act of 1995, no persons are required to respond to a collection of information unless it contains a valid OMB control number

PETITION TO MAKE SPECIAL BASED ON AGE FOR ADVANCEMENT OF EXAMINATION UNDER 37 CFR 1.102(c)(1)

Application Information

Application Number	12885227	Confirmation Number	8294	Filing Date	2010-09-17
Attorney Docket Number (optional)	RIVT-000211	Art Unit		Examiner	
First Named Inventor	Michael L. Rohan				
Title of Invention	TAXONOMY MAPPING				

Attention: Office of Petitions
An application may be made special for advancement of examination upon filing of a petition showing that the applicant is 65 years of age, or more. No fee is required with such a petition. See 37 CFR 1.102(c)(1) and MPEP 708.02 (IV).

APPLICANT HEREBY PETITIONS TO MAKE SPECIAL FOR ADVANCEMENT OF EXAMINATION IN THIS APPLICATION UNDER 37 CFR 1.102(c)(1) and MPEP 708.02 (IV) ON THE BASIS OF THE APPLICANT'S AGE.

A grantable petition requires one of the following items:
(1) Statement by one named inventor in the application that he/she is 65 years of age, or more; or
(2) Certification by a registered attorney/agent having evidence such as a birth certificate, passport, driver's license, etc. showing one named inventor in the application is 65 years of age, or more.

Name of Inventor who is 65 years of age, or older

Given Name	Middle Name	Family Name	Suffix
Michael	L.	Rohan	

A signature of the applicant or representative is required in accordance with 37 CFR 1.33 and 10.18.
Please see 37 CFR 1.4(d) for the format of the signature.

Select (1) or (2) :

○ (1) I am an inventor in this application and I am 65 years of age, or more.

● (2) I am an attorney or agent registered to practice before the Patent and Trademark Office, and I certify that I am in possession of evidence, and will retain such in the application file record, showing that the inventor listed above is 65 years of age, or more.

Signature	/Michael A DeSancctis/	Date (YYYY-MM-DD)	2011-09-13
Name	Michael A. DeSanctis	Registration Number	39957

PTO/SB/130 (07-09)
Approved for use through 07/31/2012. OMB 0651- 0031
U.S. Patent and Trademark Office; U.S. DEPARTMENT OF COMMERCE
Under the Paperwork Reduction Act of 1995, no persons are required to respond to a collection of information unless it contains a valid OMB control number

Privacy Act Statement

The Privacy Act of 1974 (P.L. 93-579) requires that you be given certain information in connection with your submission of the attached form related to a patent application or patent. Accordingly, pursuant to the requirements of the Act, please be advised that: (1) the general authority for the collection of this information is 35 U.S.C. 2(b)(2); (2) furnishing of the information solicited is voluntary; and (3) the principal purpose for which the information is used by the U.S. Patent and Trademark Office is to process and/or examine your submission related to a patent application or patent. If you do not furnish the requested information, the U.S. Patent and Trademark Office may not be able to process and/or examine your submission, which may result in termination of proceedings or abandonment of the application or expiration of the patent.

The information provided by you in this form will be subject to the following routine uses:

1. The information on this form will be treated confidentially to the extent allowed under the Freedom of Information Act (5 U.S.C. 552) and the Privacy Act (5 U.S.C. 552a). Records from this system of records may be disclosed to the Department of Justice to determine whether the Fr eedom of Information Act requires disclosure of these records.

2. A record from this system of records may be disclosed, as a routine use, in the course of presenting evidence to a court, magistrate, or administrative tribunal, including disclosures to opposing counsel in the course of settlement negotiations.

3. A record in this system of records may be disclosed, as a routine use, to a Member of Congress submitting a request involving an individual, to whom the record pertains, when the individual has requested assistance from the Member with respect to the subject matter of the record.

4. A record in this system of records may be disclosed, as a routine use, to a contractor of the Agency having need for the information in order to perform a contract. Recipients of information shall be required to comply with the requirements of the Privacy Act of 1974, as amended, pursuant to 5 U.S.C. 552a(m).

5. A record related to an International Application filed under the Patent Cooperation Treaty in this system of records may be disclosed, as a routine use, to the International Bureau of the World Intellectual Property Organization, pursuant to the Patent Cooperation Treaty.

6. A record in this system of records may be disclosed, as a routine use, to another federal agency for purposes of National Security review (35 U.S.C. 181) and for review pursuant to the Atomic Energy Act (42 U.S.C. 218(c)).

7. A record from this system of records may be disclosed, as a routine use, to the Administrator, General Services, or his/her designee, during an inspection of records conducted by GSA as part of that agency's responsibility to recommend improvements in records management practices and programs, under authority of 44 U.S.C. 2904 and 2906. Such disclosure shall be made in accordance with the GSA regulations governing inspection of records for this purpose, and any other relevant (i.e., GSA or Commerce) directive. Such disclosure shall not be used to make determinations about indivi duals.

8. A record from this system of records may be disclosed, as a routine use, to the public after either publication of the application pursuant to 35 U.S.C. 122(b) or issuance of a patent pursuant to 35 U.S.C. 151. Further, a record may be disclosed, subject to the limitations of 37 CFR 1.14, as a routine use, to the public if the record was filed in an application which became abandoned or in which the proceedings were terminated and which application is referenced by either a published application, an application open to public inspections or an issued patent.

9. A record from this system of records may be disclosed, as a routine use, to a Federal, State, or local law enforcement agency, if the USPTO becomes aware of a violation or potential violation of law or regulation.

UNITED STATES PATENT AND TRADEMARK OFFICE

Commissioner for Patents
United States Patent and Trademark Office
P.O. Box 1450
Alexandria, VA 22313-1450
www.uspto.gov

MAIL

OCT 0 4 2010

DIRECTOR'S OFFICE
TECHNOLOGY CENTER 2600

Hovey Williams LLP
10801 Mastin Blvd., Suite 1000
Overland Park KS 66210

In re Application of:
HALER, ROBERT D.
Serial No.: 12/885,230
Filed: September 17, 2010

Title: **REAR VIEW MIRROR WITH INTEGRATED VIDEO SYSTEM**

DECISION ON PETITION TO MAKE SPECIAL FOR NEW APPLICATION UNDER 37 C.F.R. § 1.102 & M.P.E.P. § 708.02

The petition to make the application special filed September 17, 2010 is **GRANTED**.

The application is eligible for accelerated examination and the petition complies with the conditions for granting the application special status pursuant to the "Change to Practice for Petitions in Patent Applications to Make Special and for Accelerated Examination" published June 26, 2006, in the Federal Register. (71 Fed. Reg. 36323).

The prosecution of the instant application will be conducted expeditiously according to the following guidelines.

1. The application will be docketed to an examiner and taken up for action within two weeks of the date of this decision.

2. Restriction Practice:
If the examiner determines that the claims are not directed to a single invention, a telephone request to elect one single invention will be made pursuant to MPEP 812.01. As a prerequisite to the grant of this petition, the applicant has agreed to make an oral election, by telephone, without traverse. If the applicant refuses to make an election without traverse, or the examiner cannot reach the applicant after a reasonable effort, the examiner will treat the first claimed invention (invention defined by claim 1) as having being constructively elected without traverse for examination.

3. Office action:

If it is determined that, after appropriate consultation, there is a potential rejection or any other issue to be addressed, the examiner will telephone the applicant and arrange an interview to discuss and resolve the issue. An Office action, other than a Notice of Allowance and Fee(s) Due (Notice of Allowance), will not be issued unless either: 1) an interview was conducted but did not result in agreed to action that places the application in condition for allowance, or, 2) a determination is made that an interview would be unlikely to result in the application being placed in condition for allowance, and 3) an internal conference has been held to review any rejection of any claim.

4. Time for Reply:
An Office action other than a Notice of Allowance or a final Office action will set a shortened statutory period of one month or thirty days, whichever is longer, for reply with no extension of time available under 37 CFR 1.136(a). Failure to timely file a reply within this non-extendible period for reply will result in the abandonment of the application.

5. Reply by Applicant:
A timely reply to an Office action other than the Notice of Allowance must be submitted electronically via EFS or EFS-web and limited to addressing the rejections, objections and requirement made. Any amendment that attempts to: 1) add claims which would result in more than three pending independent claims or more than twenty pending total claims; 2) present claims not encompassed by the pre-examination search or an updated accelerated examination support document; or 3) present claims that are directed a non-elected invention or an invention other than that previously claimed and examined in the application, will be treated as not fully responsive and will not be entered.

For any amendment to the claims (including any new claim) that is not encompassed by the accelerated examination support document, applicant must provide an updated accelerated examination support document that encompasses the amended or new claims at the time of filing of the amendment.

To proceed expeditiously with the examination, it is recommended that a reply with amendments made to any claim or with any new claim being added be accompanied by an updated accelerated examination support document or a statement explaining how the amended or new claim is supported by the original accelerated examination support document.

6. Information Disclosure Statement (IDS):
Any IDS filed during prosecution must be submitted electronically via EFS or EFS-web, accompanied by an updated accelerated examination support document, and be in compliance with 37 CFR 1.97 and 1.98.

7. Post-Allowance Processing:
To expedite processing of the allowed application into a patent, the applicant must: 1) pay the required fees within one month of the date of the Notice of Allowance, and 2) not

file any post allowance papers not required by the Office. In no event may the issue fee be paid and accepted later than three months from the date of the Notice of Allowance.

8. After-Final and Appeal Procedures:
   To expedite prosecution, after receiving the final Office action, applicant must: 1) promptly file a notice of appeal, an appeal brief and appeal fees; and 2) not request a pre-appeal brief conference.

   Any amendment, affidavit or other evidence filed after final Office action must comply with applicable rules and the requirements outlined in numbered paragraphs 5 and 6 above.

   On appeal, the application will proceed according to normal appeal procedures. After appeal, the application will again be treated special.

9. Proceedings Outside the Normal Examination Process:
   If the application becomes involved in a proceeding that is outside the normal examination process (e.g., a secrecy order, national security review, interference proceeding, petitions under 37 CFR 1.181, 182 or 183), the application will be treated special before and after such proceeding.

10. Final Disposition:
    The twelve month goal of this accelerated examination procedure ends with a final disposition. The mailing of a final Office action, a Notice of Allowance, the filing of a Notice of Appeal, or the filing of a Request for Continued Examination (RCE) is the final disposition.

If, during prosecution, a paper is not filed electronically using EFS-web, a reply is filed but is not fully responsive, the application is involved in an appeal, or a proceeding outside normal examination process, the application will still be examined expeditiously, however, the final disposition may occur more than twelve months from the filing of the application.

Any inquiry regarding this decision should be directed to Ken Wieder, Quality Assurance Specialist, at (571) 272-2986.

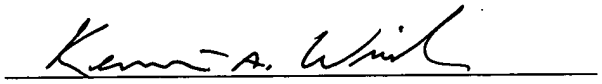

Kenneth A. Wieder
Quality Assurance Specialist
Technology Center 2600
Communications

UNITED STATES PATENT AND TRADEMARK OFFICE

Commissioner for Patents
United States Patent and Trademark Office
P.O. Box 1450
Alexandria, VA 22313-1450
www.uspto.gov

KILPATRICK TOWNSEND & STOCKTON LLP / PULMONX 017534
TWO EMBARCADERO CENTER
EIGHTH FLOOR
SAN FRANCISCO, CA 94111-3834

MAILED

JUN 13 2011

OFFICE OF PETITIONS

In re Application of :
Robert M. George et al :
Application No. 12/885,250 : DECISION ON PETITION
Filed: September 17, 2010 : TO WITHDRAW
Attorney Docket No.: 017534-005312US : FROM RECORD
:

This is a decision on the Request to Withdraw as attorney or agent of record under 37 C.F.R. § 1.36(b), filed May 13, 2011.

The request is **NOT APPROVED**.

A grantable request to withdraw as attorney/agent of record must be signed by every attorney/agent seeking to withdraw or contain a clear indication that one attorney is signing on behalf of another/others.

The request is filed by Brad J. Loos on behalf of the attorneys/agents associated with Customer Number 96352.

The Office no longer accepts an address change to the new practitioner identified in the request, absent the filing of a power of attorney to the new representative. The Office will, however, change the correspondence address of record to the most current address provided for (1) the intervening assignee of the entire interest or (2) the first named inventor.

The request to withdraw from record cannot be approved at this time, since the Customer Number provided (20995) does not identify the intervening assignee of the entire interest or the first named inventor.

All future communications from the Office will continue to be directed to the above-listed address until otherwise notified by applicant.

Telephone inquiries concerning this decision should be directed to undersigned at 571-272-3210. All other inquiries concerning the examination or status of this application should be directed to the Technology Center.

Irvin Dingle
Petitions Examiner
Office of Petitions

UNITED STATES PATENT AND TRADEMARK OFFICE

UNITED STATES DEPARTMENT OF COMMERCE
United States Patent and Trademark Office
Address: COMMISSIONER FOR PATENTS
P.O. Box 1450
Alexandria, Virginia 22313-1450
www.uspto.gov

APPLICATION NO.	FILING DATE	FIRST NAMED INVENTOR	ATTORNEY DOCKET NO.	CONFIRMATION NO.
12/885,254	09/17/2010	Keith A. McCall	120924-177024	8343

60172 7590 01/31/2011

SCHWABE, WILLIAMSON & WYATT, P.C.
1420 FIFTH AVENUE, SUITE 3400
SEATTLE, WA 98101-4010

EXAMINER	
EPSTEIN, BRIAN M	
ART UNIT	**PAPER NUMBER**
3628	
MAIL DATE	**DELIVERY MODE**
01/31/2011	PAPER

Please find below and/or attached an Office communication concerning this application or proceeding.

The time period for reply, if any, is set in the attached communication.

UNITED STATES PATENT AND TRADEMARK OFFICE

Commissioner for Patents
United States Patent and Trademark Office
P.O. Box 1450
Alexandria, VA 22313-1450
www.uspto.gov

JAN 3 1 2011

SCHWABE, WILLIAMSON & WYATT, P.C.
1420 FIFTH AVENUE, SUITE 3400
SEATTLE WA 98101-4010

In re application of: : **DECISION ON PETITION**
MCCALL, Keith A., et al. : **TO MAKE SPECIAL FOR**
Application No. 12/885,254 : **NEW APPLICATION**
Filed: September 17, 2010 : **UNDER 37 CFR 1.102**
For: PACKAGE SHIPPING SYSTEM AND METHOD, INCLUDING USAGE OF HISTORICAL ANALYTIC DATA

This is a decision on the petition filed on September 17, 2010 to make the above-identified application special for accelerated examination procedure under 37 C.F.R. § 1.102(d).

The petition to make the application special is **DISMISSED**.

REGULATION AND PRACTICE

A grantable petition to make special under 37 C.F.R. § 1.102(d) and pursuant to the "Change to Practice for Petitions in Patent Applications to Make Special and for Accelerated Examination" published in the Federal Register on June 26, 2006 (71 Fed. Reg. 36323), must satisfy the following conditions:

I. Conditions Regarding the Application:

1. the application must be a non-reissue utility or design application filed under 37 CFR 1.111(a);

2. the application, the petition and the required fees must be filed electronically using the USPTO's electronic filing system (EFS), or EFS-web; if not filed electronically, a statement asserting that EFS and EFS-web were not available during the normal business hours.

3. at the time of filing, the application must be complete under 37 CFR 1.51 and in condition for examination;

4. the application must contain three or fewer independent claims and twenty or fewer total claims and the claims must be directed to a single invention.

II. Conditions Regarding the Petition:

The petition must:

1. be filed with the application;

2. include a statement that applicant agrees not to separately argue the patentability of any independent claim during any appeal in the application;

3. include a statement that applicant agrees to make an election without traverse in a telephone interview.

4. include a statement that applicant agrees to conduct such an interview when requested by the examiner.

5. include a statement, made based on a good faith belief, that a preexamination search in compliance with the following requirements, was conducted, including an identification of the field of search by United States class and subclass, where applicable, and for database searches, the search logic or chemical structure or sequence used as a query, the name of the file(s) searched and the database service, and the date of the search.

The preexamination search must:

5.1 involve U.S. patents and patent application publications, foreign patent documents, and non-patent literature, unless the applicant can justify with reasonable certainty that no references more pertinent than those already identified are likely to be found in the eliminated sources and includes such a justification with this statement;

5.2. be directed to the claimed invention and encompass all of the features of the claims, giving the claims the broadest reasonable interpretation;

5.3. encompass the disclosed features that may be claimed.

6. must provide in support of the petition an accelerated examination support document.

An accelerated examination support document must include:

6.1. an information disclosure statement (IDS) in compliance with 37 CFR 1.98 citing each reference deemed most closely related to the subject matter of each of the claims;

6.2. an identification of all the limitations in the claims that are disclosed by the reference specifying where the limitation is disclosed in the cited reference;

6.3. a detailed explanation of how each of the claims is patentable over the references cited with particularity required by 37 CFR 1.111(b) and (c);

6.4. a concise statement of the utility of the invention as defined in each of the independent claims (unless the application is a design application);

6.5. a showing of where each limitation of the claims finds support under 35 USC 112, first paragraph, in the written description of the specification. If applicable, the showing must also identify: (1) each means- (or step) plus-function claim element that invokes consideration under 35 USC 112, sixth paragraph; and (2) the structure, material, or acts in the specification that corresponds to each means- (or step) plus-function claim element that invokes consideration under 35 USC 112, sixth paragraph; if the application claims the benefit of one or more applications

under title 35, United States Code, the showing must also include where each limitation of the claims finds support under 35 USC 112, first paragraph, in each such application in which such supports exists;

6.6. an identification of any cited references that may be disqualified under 35 USC 103(c).

REVIEW OF FACTS

The petition in this case fails to comply with Conditions II.6.3 and II.6.5.

As to Condition II.6.3, while applicant does explain patentability with regard to some claims, applicant has not provided a detailed explanation as to how or whether claims 7-14, 17 and 20 are patentable over the prior art cited. It appears that at least some limitations of these claims have been mapped to one or more references deemed most closely related, however there is no clear indication whether applicant believes there is still a patentable distinction between these claims and the references apart from their dependency, or whether applicant believes these claims are not separately patentable if the claims from which they depend are not found to be patentable. Note in particular claim 17, which further defines "historical analytic data" that was emphasized as a patentable feature with respect to claim 1 in the Support Document, but appears to be taught at least in part by Kadaba '233. Applicant should clearly explain the patentability of each claim.

As to Condition II.6.5, while applicant has indicated support within the current application for the claimed features, this application also claims benefit of provisional application 61/243924 as per the Application Data Sheet filed September 17, 2010. The Support Document does not show where each limitation of the claims finds support under 35 USC 112,1st paragraph in this provisional application to which benefit is claimed.

DECISION

For the above stated reasons, the petition is **DISMISSED**. The application will therefore be taken up by the examiner for action in its regular turn.

Petitioner is given a single opportunity to perfect the petition. Any request for reconsideration of this decision must be submitted within one (1) month or thirty (30) days, whichever is longer, from the date of this decision. No extensions of time will be granted under 37 CFR 1.136(a) if the request is to be considered timely. Any request for reconsideration must address the deficiencies indicated above.

Petitioner is reminded that, upon granting of the special status of the application on request for reconsideration, the application will be processed expeditiously.

However, due to the dismissal of the instant petition, examination may not be completed within twelve months of the filing date of the application.

Any inquiry regarding this decision should be directed to Robert Weinhardt, Business Practice Specialist, at (571) 272-6633.

Robert A. Weinhardt,
Business Practice Specialist
Technology Center 3600

RW/1/29/11

UNITED STATES PATENT AND TRADEMARK OFFICE

UNITED STATES DEPARTMENT OF COMMERCE
United States Patent and Trademark Office
Address: COMMISSIONER FOR PATENTS
P.O. Box 1450
Alexandria, Virginia 22313-1450
www.uspto.gov

APPLICATION NO.	FILING DATE	FIRST NAMED INVENTOR	ATTORNEY DOCKET NO.	CONFIRMATION NO.
12/885,254	09/17/2010	Keith A. McCall	120924-177024	8343

60172 7590 05/16/2011

SCHWABE, WILLIAMSON & WYATT, P.C.
1420 FIFTH AVENUE, SUITE 3400
SEATTLE, WA 98101-4010

EXAMINER	
EPSTEIN, BRIAN M	

ART UNIT	PAPER NUMBER
3628	

MAIL DATE	DELIVERY MODE
05/16/2011	PAPER

Please find below and/or attached an Office communication concerning this application or proceeding.

The time period for reply, if any, is set in the attached communication.

UNITED STATES PATENT AND TRADEMARK OFFICE

Commissioner for Patents
United States Patent and Trademark Office
P.O. Box 1450
Alexandria, VA 22313-1450
www.uspto.gov

SCHWABE, WILLIAMSON & WYATT, P.C.
1420 FIFTH AVENUE, SUITE 3400
SEATTLE WA 98101-4010

In re application of: :
MCCALL, Keith A., et al. :
Application No. 12/885,254 :
Filed: September 17, 2010 :
For: PACKAGE SHIPPING SYSTEM AND METHOD, INCLUDING USAGE OF HISTORICAL ANALYTIC DATA

DECISION ON PETITION TO MAKE SPECIAL FOR NEW APPLICATION UNDER 37 CFR 1.102

This is a decision on the petition filed on September 17, 2010 and the revised Accelerated Examination Search and Support documents filed February 28, 2011 to make the above-identified application special for accelerated examination procedure under 37 C.F.R. § 1.102(d).

The petition to make the application special is **GRANTED**.

The application is eligible for accelerated examination and the petition complies with the conditions for granting the application special status pursuant to the "Change to Practice for Petitions in Patent Applications to Make Special and for Accelerated Examination" published June 26, 2006, in the Federal Register. (71 Fed. Reg. 36323).

The prosecution of the instant application will be conducted expeditiously according to the following guidelines.

1. The application will be docketed to an examiner and taken up for action within two weeks of the date of this decision.

2. Restriction Practice:
If the examiner determines that the claims are not directed to a single invention, a telephone request to elect one single invention will be made pursuant to MPEP 812.01. As a prerequisite to the grant of this petition, the applicant has agreed to make an oral election, by telephone, without traverse. If the applicant refuses to make an election without traverse, or the examiner cannot reach the applicant after a reasonable effort, the examiner will treat the

first claimed invention (invention defined by claim 1) as having being constructively elected without traverse for examination.

3. Office action:
If it is determined that, after appropriate consultation, there is a potential rejection or any other issue to be addressed, the examiner will telephone the applicant and arrange an interview to discuss and resolve the issue. An Office action, other than a Notice of Allowance and Fee(s) Due (Notice of Allowance), will not be issued unless either: 1) an interview was conducted but did not result in agreed to action that places the application in condition for allowance, or, 2) a determination is made that an interview would be unlikely to result in the application being placed in condition for allowance, and 3) an internal conference has been held to review any rejection of any claim.

4. Time for Reply:
An Office action other than a Notice of Allowance or a final Office action will set a shortened statutory period of one month or thirty days, whichever is longer, for reply with no extension of time available under 37 CFR 1.136(a). Failure to timely file a reply within this non-extendible period for reply will result in the abandonment of the application.

5. Reply by Applicant:
A timely reply to an Office action other than the Notice of Allowance must be submitted electronically via EFS or EFS-web and limited to addressing the rejections, objections and requirement made. Any amendment that attempts to: 1) add claims which would result in more than three pending independent claims or more than twenty pending total claims; 2) present claims not encompassed by the pre-examination search or an updated accelerated examination support document; or 3) present claims that are directed to a non-elected invention or an invention other than that previously claimed and examined in the application, will be treated as not fully responsive and will not be entered.

   For any amendment to the claims (including any new claim) that is not encompassed by the accelerated examination support document, applicant must provide an updated accelerated examination support document that encompasses the amended or new claims at the time of filing of the amendment.

   To proceed expeditiously with the examination, it is recommended that a reply with amendments made to any claim or with any new claim being added be accompanied by an updated accelerated

examination support document or a statement explaining how the amended or new claim is supported by the original accelerated examination support document.

6. Information Disclosure Statement (IDS):
Any IDS filed during prosecution must be submitted electronically via EFS or EFS-web, accompanied by an updated accelerated examination support document, and be in compliance with 37 CFR 1.97 and 1.98.

7. Post-Allowance Processing:
To expedite processing of the allowed application into a patent, the applicant must: 1) pay the required fees within one month of the date of the Notice of Allowance, and 2) not file any post allowance papers not required by the Office. In no event may the issue fee be paid and accepted later than three months from the date of the Notice of Allowance.

8. After-Final and Appeal Procedures:
To expedite prosecution, after receiving the final Office action, applicant must: 1) promptly file a notice of appeal, an appeal brief and appeal fees; and 2) not request a pre-appeal brief conference.

   Any amendment, affidavit or other evidence filed after final Office action must comply with applicable rules and the requirements outlined in numbered paragraphs 5 and 6 above.

   On appeal, the application will proceed according to normal appeal procedures. After appeal, the application will again be treated special.

9. Proceedings Outside the Normal Examination Process:
If the application becomes involved in a proceeding that is outside the normal examination process (e.g., a secrecy order, national security review, interference proceeding, petitions under 37 CFR 1.181, 182 or 183), the application will be treated special before and after such proceeding.

10. Final Disposition:
The twelve month goal of this accelerated examination procedure ends with a final disposition. The mailing of a final Office action, a Notice of Allowance, the filing of a Notice of Appeal, or the filing of a Request for Continued Examination (RCE) is the final disposition.

    If, during prosecution, a paper is not filed electronically using EFS-web, a reply is filed but is not fully responsive, the application is

involved in an appeal, or a proceeding outside normal examination process, the application will still be examined expeditiously, however, the final disposition may occur more than twelve months from the filing of the application.

Any inquiry regarding this decision should be directed to Robert Weinhardt, Business Practice Specialist, at (571) 272-6633.

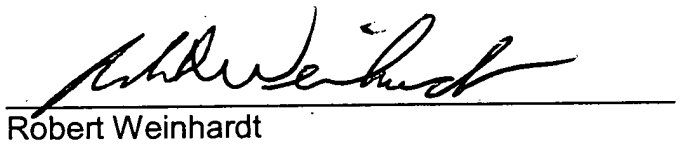

Robert Weinhardt
Business Practice Specialist
Technology Center 3600

RW/5/15/11

UNITED STATES PATENT AND TRADEMARK OFFICE

UNITED STATES DEPARTMENT OF COMMERCE
United States Patent and Trademark Office
Address: COMMISSIONER FOR PATENTS
P.O. Box 1450
Alexandria, Virginia 22313-1450
www.uspto.gov

APPLICATION NO.	FILING DATE	FIRST NAMED INVENTOR	ATTORNEY DOCKET NO.	CONFIRMATION NO.
12/885,261	09/17/2010	BRIAN CHARLES HARDING		8357

7590 10/25/2010

BRIAN CHARLES HARDING
14805 West Park Ave., Rear
Boulder Creek, CA 95006

EXAMINER	
ART UNIT	PAPER NUMBER
1791	

MAIL DATE	DELIVERY MODE
10/25/2010	PAPER

Please find below and/or attached an Office communication concerning this application or proceeding.

The time period for reply, if any, is set in the attached communication.

UNITED STATES PATENT AND TRADEMARK OFFICE

Commissioner for Patents
United States Patent and Trademark Office
P.O. Box 1450
Alexandria, VA 22313-1450
www.uspto.gov

CST

10/25/10

In re application of
Brian Charles Harding
Serial No. 12/885,261
Filed: September 17, 2010
For: NON-ADHESIVE SCREEN TARGET

DECISION ON PETITION
TO MAKE SPECIAL

This is a decision on the petition filed on September 17, 2010 to make the above-identified application special under the accelerated examination program.

The petition to make the application special is **DENIED.**

REGULATION AND PRACTICE

To be eligible for accelerated examination under 37 C.F.R. § 1.102(d) and pursuant to the "Changes to Practice for Petitions in Patent Applications to Make Special and for Accelerated Examination" published in the Federal Register on June 26, 2006 (71 Fed. Reg. 36323), the following conditions must be satisfied:

1. The application must be a non-reissue utility or design application filed under 37 CFR 1.111(a);
2. The application, the petition and the required fees must be filed electronically using the USPTO's electronic filing system (EFS), or EFS-web; if not filed electronically, a statement asserting that EFS and EFS-web were not available during the normal business hours;
3. The application, at the time of filing, must be complete under 37 CFR 1.51 and in condition for examination;
4. The application must contain three or fewer independent claims and twenty or fewer total claims and the claims must be directed to a single invention.

The application as filed is not eligible for accelerated examination under 37 C.F.R. § 1.102(d) because the application, at the time of filing, was not in condition for examination. Note, specifically, the NOTICE TO FILE CORRECTED APPLICATION

PAPERS mailed on September 23, 2010, which indicates that the application was not in condition for examination at the time of filing.

MPEP 708.02(a), section VIII further states:

> The petition to make special will be dismissed if the application omits an item or includes a paper that causes the Office of Initial Patent Examination (OIPE) to mail a notice during the formality review (e.g., a notice of incomplete application, notice to file missing parts, notice to file corrected application papers, notice of omitted items, or notice of informal application). The opportunity to perfect a petition (subsection II above) does not apply to applications that are not in condition for examination on filing.

For the above-stated reasons, the petition is denied. The application will therefore be taken up by the examiner for action in its regular turn.

Any inquiry regarding this decision should be directed to Christine Tierney, Quality Assurance Specialist, at (571) 272-1055.

/Christine Tierney/

Christine Tierney
Quality Assurance Specialist
Technology Center 1700

UNITED STATES PATENT AND TRADEMARK OFFICE

Commissioner for Patents
United States Patent and Trademark Office
P.O. Box 1450
Alexandria, VA 22313-1450
www.uspto.gov

KILPATRICK TOWNSEND & STOCKTON LLP
TWO EMBARCADERO CENTER
EIGHTH FLOOR
SAN FRANCISCO CA 94111-3834

MAILED

MAY 06 2011

OFFICE OF PETITIONS

In re Application of :

Rio Sabadicci :
Application No. 12/885,272 : DECISION ON PETITION
Filed: September 17, 2010 : TO WITHDRAW
Attorney Docket No. **028005-000510US** : FROM RECORD
:

This is a decision on the Request to Withdraw as attorney or agent of record under 37 CFR § 1.36(b), filed April 19, 2011.

The request is **NOT APPROVED**.

The request cannot be approved because the requested change in the correspondence address is improper.

The Office will only accept correspondence address changes to the most current address information provided for the assignee of the entire interest *who properly became of record under 37 CFR 3.71,* or, if no assignee of the entire interest has properly been made of record, the most current address information provided for the first named inventor. 37 CFR 3.71(c) states:

> ***An assignee becomes of record either in a national patent application or a reexamination proceeding by filing a statement in compliance with § 3.73(b) that is signed by a party who is authorized to act on behalf of the assignee.***

Therefore, as there is currently no Statement under 37 CFR 3.73(b) with the current assignee information of record in the instant application, the Office cannot change the correspondence address to the address on the Request to Withdraw at this present time.

All future communications from the Office will continue to be directed to the above-listed address until otherwise notified by applicant.

Telephone inquires concerning this decision should be directed to JoAnne Burke at 571-272-4584.

JoAnne Burke
Petitions Examiner
Office of Petitions

UNITED STATES PATENT AND TRADEMARK OFFICE

UNITED STATES DEPARTMENT OF COMMERCE
United States Patent and Trademark Office
Address: COMMISSIONER FOR PATENTS
P.O. Box 1450
Alexandria, Virginia 22313-1450
www.uspto.gov

APPLICATION NO.	FILING DATE	FIRST NAMED INVENTOR	ATTORNEY DOCKET NO.	CONFIRMATION NO.
12/885,278	09/17/2010	Kazunori Hamada	17328/051001	8386

22511 7590 10/18/2010

OSHA LIANG L.L.P.
TWO HOUSTON CENTER
909 FANNIN, SUITE 3500
HOUSTON, TX 77010

EXAMINER	
ART UNIT	PAPER NUMBER
3732	

NOTIFICATION DATE	DELIVERY MODE
10/18/2010	ELECTRONIC

Please find below and/or attached an Office communication concerning this application or proceeding.

The time period for reply, if any, is set in the attached communication.

Notice of the Office communication was sent electronically on above-indicated "Notification Date" to the following e-mail address(es):

docketing@oshaliang.com
buta@oshaliang.com

UNITED STATES PATENT AND TRADEMARK OFFICE

Commissioner for Patents
United States Patent and Trademark Office
P.O. Box 1450
Alexandria, VA 22313-1450
www.uspto.gov

OSHA LIANG, L.L.P.
TWO HOUSTON CENTER
909 FANNIN, SUITE 3500
HOUSTON, TX 77010

In re Application of	:
Kazunori Hamada	:
Serial No.: 12/885,278	: PETITION DECISION
Filed: September 17, 2010	:
Attorney Docket No.: 17328/051001	:

This is a decision on the PETITION FOR ACCEPTANCE OF COLOR DRAWINGS UNDER 37 CFR 1.84(a)(2). The petition was filed September 17, 2010. Entry of color drawings requires: 1) three sets of the color drawings, 2) a proper amendment to the specification indicating color photographs or drawings are present in the file, and 3) the required fee under 37 CFR 1.17(h).

A review of the application record indicates that the petition lacks the required three (3) set of color drawings. Applicants should submit a renewed petition accompanied by the required amendment as a separate paper. No additional petition fee will be required.

The petition is **DISMISSED**.

Should there be any questions with respect to this decision, please contact Cris L Rodriguez, by mail addressed to: Director, Technology Center 3700, at the address listed above, or by telephone at 571-272-4964 or by facsimile transmission at 571-273-8300.

Cris L. Rodriguez
SPE, Art Unit 3732

UNITED STATES PATENT AND TRADEMARK OFFICE

Commissioner for Patents
United States Patent and Trademark Office
P.O. Box 1450
Alexandria, VA 22313-1450
www.uspto.gov

OSHA LIANG LLP
TWO HOUSTON CENTER
909 FANNIN SUITE 3500
HOUSTON TX 77010

MAILED
MAR 19 2012
OFFICE OF PETITIONS

In re Application of	:	**DECISION**
Kazunori Hamada	:	**ON PETITION**
Application No. 12/885,278	:	
Filed: September 17, 2010	:	**ACCEPTANCE OF**
Attorney Docket Number: 17328/0551001	:	**COLOR DRAWINGS**

This is in response to the petition under 37 CFR 1.84(a)(2), filed November 17, 2010, for acceptance of color drawings.

The petition is **GRANTED**.

A grantable petition under 37 C.F.R. 1.84(a)(2) must be accompanied by the following:

(1) The fee set forth in 37 C.F.R. 1.17(h);

(2) Three (3) sets of color drawings, or one (1) set if filed via EFS, and

(3) The specification contains appropriate language referring to the color drawings as the first paragraph in that portion of the specification relating to the brief description of the drawings.

Here, the petition was accompanied by the drawings. The required fee and amendment to the specification was previously filed on September 17, 2010.

The application is being forwarded to Group Art Unit 2883.

Telephone inquiries regarding this decision should be directed to Petitions Attorney Cliff Congo at (571)272-3207.

Jose Dees
Petitions Examiner
Office of Petitions

Doc Code: PPH.PCT.652
Document Description: Petition to make special under PCT-Patent Pros Hwy

PTO/SB/20PCT-KR (06-10)
Approved for use through 01/31/2012. OMB 0651-0058
U.S. Patent and Trademark Office; U. S. DEPARTMENT OF COMMERCE
Under the Paperwork Reduction Act of 1995, no persons are required to respond to a collection of information unless it displays a valid OMB control number.

REQUEST FOR PARTICIPATION IN THE PATENT COOPERATION TREATY - PATENT PROSECUTION HIGHWAY (PCT-PPH) PILOT PROGRAM BETWEEN THE KOREAN INTELLECTUAL PROPERTY OFFICE (KIPO) AND THE USPTO

Application No:	12/885,284	Filing date:	09-17-2010
First Named Inventor:	Christian M. Lambert		
Title of the Invention:	IMPREGNATED CUTTING ELEMENTS WITH LARGE ABRASIVE CUTTING MEDIA AND METHODS OF MAKING AND USING THE SAME		

THIS REQUEST FOR PARTICIPATION IN THE PCT-PPH PILOT PROGRAM ALONG WITH THE REQUIRED DOCUMENTS MUST BE SUBMITTED VIA EFS-WEB. INFORMATION REGARDING EFS-WEB IS AVAILABLE AT HTTP://WWW.USPTO.GOV/EBC/EFS_HELP.HTML

APPLICANT HEREBY REQUESTS PARTICIPATION IN THE PCT-PPH PROGRAM AND PETITIONS TO MAKE THE ABOVE-IDENTIFIED APPLICATION SPECIAL UNDER THE PCT-PPH PROGRAM.

The above-identified application is (1) a national stage entry of the corresponding PCT application, or (2) a national stage entry of another PCT application which claims priority to the corresponding PCT application, or (3) a national application that claims domestic/ foreign priority to the corresponding PCT application, or (4) a national application which forms the basis for the priority claim in the corresponding PCT application, or (5) a continuing application of a U.S. application that satisfies one of (1) to (4) above, or (6) a U.S. application that claims domestic benefit to a U.S. provisional application which forms the basis for the priority claim in the corresponding PCT application.

The corresponding PCT application number(s) is/are: PCT/US10/49742

The international filing date of the corresponding PCT application(s) is/are: 09-22-2010

I. List of Required Documents:

a. **A copy of the latest international work product (WO/ISA, WO/IPEA, or IPER) in the above–identified corresponding PCT application(s)**

☑ Is attached.

☐ Is not attached because the document is already in the U.S. application.

b. **A copy of all claims which were indicated as having novelty, inventive step and industrial applicability in the above-identified corresponding PCT application(s).**

☑ Is attached.

☐ Is not attached because the document is already in the U.S. application.

c. **English translations of the documents in a. and b. above are attached (if the documents are not in the English language). A statement that the English translation is accurate is attached for the document in b. above.**

This collection of information is required by 35 U.S.C. 119, 37 CFR 1.55, and 37 CFR 1.102(d). The information is required to obtain or retain a benefit by the public, which is to file (and by the USPTO to process) an application. Confidentiality is governed by 35 U.S.C. 122 and 37 CFR 1.11 and 1.14. This collection is estimated to take 2 hours to complete, including gathering, preparing, and submitting the completed application form to the USPTO. Time will vary depending upon the individual case. Any comments on the amount of time you require to complete this form and/or suggestions for reducing this burden should be sent to the Chief Information Officer, U.S. Patent and Trademark Office, U.S. Department of Commerce, P.O. Box 1450, Alexandria, VA 22313-1450. DO NOT SEND FEES OR COMPLETED FORMS TO THIS ADDRESS.

PTO/SB/20PCT-KR (06-10)
Approved for use through 01/31/2012. OMB 0651-0058
U.S.Patent and Trademark Office; U.S. DEPARTMENT OF COMMERCE
Under the Paperwork Reduction Act of 1995, no persons are required to respond to a collection of information unless it displays a valid OMB control number.

REQUEST FOR PARTICIPATION IN THE PCT-PPH PILOT PROGRAM BETWEEN THE KIPO AND THE USPTO

(continued)

Application No.:	12/885,284
First Named Inventor:	Christian M. Lambert

d. **(1) An information disclosure statement listing the documents cited in the international work products (ISR, WO/ISA, WO/IPEA, IPER) of the corresponding PCT application.**

☐ Is attached

☑ Has already been filed in the above-identified U.S. application on 2011-08-24 & 2010-10-14

(2) Copies of all documents (except) for U.S. patents or U.S. patent application publications)

☐ Are attached.

☑ Have already been filed in the above-identified U.S. application on 2011-08-24

II. Claims Correspondence Table:

Claims in US Application	Patentable Claims in the corresponding PCT Application	Explanation regarding the correspondence
1-40	1-40	Claims 1-40 of the U.S. Application are the same claims as claims
		1-40 of the corresponding PCT Application
		which Box No. V of the Written Opinion indicates are allowable.

III. All the claims in the US application sufficiently correspond to the patentable claims in the corresponding PCT application.

Signature /Ryan E. Keller/	Date 09-23-2011
Name (Print/Typed) Ryan E. Keller	Registration Number 60516

Privacy Act Statement

The **Privacy Act of 1974 (P.L. 93-579)** requires that you be given certain information in connection with your submission of the attached form related to a patent application or patent. Accordingly, pursuant to the requirements of the Act, please be advised that: (1) the general authority for the collection of this information is 35 U.S.C. 2(b)(2); (2) furnishing of the information solicited is voluntary; and (3) the principal purpose for which the information is used by the U.S. Patent and Trademark Office is to process and/or examine your submission related to a patent application or patent. If you do not furnish the requested information, the U.S. Patent and Trademark Office may not be able to process and/or examine your submission, which may result in termination of proceedings or abandonment of the application or expiration of the patent.

The information provided by you in this form will be subject to the following routine uses:

1. The information on this form will be treated confidentially to the extent allowed under the Freedom of Information Act (5 U.S.C. 552) and the Privacy Act (5 U.S.C 552a). Records from this system of records may be disclosed to the Department of Justice to determine whether disclosure of these records is required by the Freedom of Information Act.
2. A record from this system of records may be disclosed, as a routine use, in the course of presenting evidence to a court, magistrate, or administrative tribunal, including disclosures to opposing counsel in the course of settlement negotiations.
3. A record in this system of records may be disclosed, as a routine use, to a Member of Congress submitting a request involving an individual, to whom the record pertains, when the individual has requested assistance from the Member with respect to the subject matter of the record.
4. A record in this system of records may be disclosed, as a routine use, to a contractor of the Agency having need for the information in order to perform a contract. Recipients of information shall be required to comply with the requirements of the Privacy Act of 1974, as amended, pursuant to 5 U.S.C. 552a(m).
5. A record related to an International Application filed under the Patent Cooperation Treaty in this system of records may be disclosed, as a routine use, to the International Bureau of the World Intellectual Property Organization, pursuant to the Patent Cooperation Treaty.
6. A record in this system of records may be disclosed, as a routine use, to another federal agency for purposes of National Security review (35 U.S.C. 181) and for review pursuant to the Atomic Energy Act (42 U.S.C. 218(c)).
7. A record from this system of records may be disclosed, as a routine use, to the Administrator, General Services, or his/her designee, during an inspection of records conducted by GSA as part of that agency's responsibility to recommend improvements in records management practices and programs, under authority of 44 U.S.C. 2904 and 2906. Such disclosure shall be made in accordance with the GSA regulations governing inspection of records for this purpose, and any other relevant (*i.e.*, GSA or Commerce) directive. Such disclosure shall not be used to make determinations about individuals.
8. A record from this system of records may be disclosed, as a routine use, to the public after either publication of the application pursuant to 35 U.S.C. 122(b) or issuance of a patent pursuant to 35 U.S.C. 151. Further, a record may be disclosed, subject to the limitations of 37 CFR 1.14, as a routine use, to the public if the record was filed in an application which became abandoned or in which the proceedings were terminated and which application is referenced by either a published application, an application open to public inspection or an issued patent.
9. A record from this system of records may be disclosed, as a routine use, to a Federal, State, or local law enforcement agency, if the USPTO becomes aware of a violation or potential violation of law or regulation.

UNITED STATES PATENT AND TRADEMARK OFFICE

Commissioner for Patents
United States Patent and Trademark Office
P.O. Box 1450
Alexandria, VA 22313-1450
www.uspto.gov

WORKMAN NYDEGGER
1000 EAGLE GATE TOWER
60 EAST SOUTH TEMPLE
SALT LAKE CITY UT 84111

MAILED

JAN 30 2012

OFFICE OF PETITIONS

In re Application of
Christian M. LAMBERT et al.
Application No.: 12/885,284
Filed: September 17, 2010
Attorney Docket No.: 17443.377.1
For: IMPREGNATED CUTTING ELEMENTS WITH LARGE ABRASIVE CUTTING MEDIA AND METHODS OF MAKING AND USING THE SAME

: DECISION ON REQUEST TO
: PARTICIPATE IN THE PATENT
: PROSECUTION HIGHWAY
: PROGRAM AND PETITION
: TO MAKE SPECIAL UNDER
: 37 CFR 1.102(a)

This is a decision on the request to participate in the PCT Patent Prosecution Highway (PCT-PPH) pilot program and the petition under 37 CFR 1.102(a), filed on September 23, 2011, to make the above-identified application special.

The request and petition are **GRANTED**.

Discussion

A grantable request to participate in the PCT-PPH pilot program and petition to make special require:

(1) The U.S. application must have an eligible relationship to one or more PCT applications where the ISA or IPEA are the JPO, EPO, KIPO, NPI, NBPR, or USPTO;

(2) At least one claim in the PCT application has novelty, inventive step, and industrial applicability and must be free of any observations in Box VIII in the latest work product in the international stage or applicant must identify and explain why the claim(s) is/are not subject to the observation in Box VIII;

(3) Applicant must submit a copy of the claim(s) from the PCT application(s) that have novelty, inventive step, and industrial applicability along with an English translation thereof and a statement that the English translation is accurate, if the claims are not in the English language;

(4) All the claims in the U.S. application must sufficiently correspond or be amended to sufficiently correspond to the claim(s) that have novelty, inventive step, and industrial applicability in the PCT application(s);

(5) Examination of the U.S. application has not begun;

(6) Applicant must submit a copy of the latest international work product from the PCT application indicating that the claim(s) have novelty, inventive step, and industrial applicability along with an English translation thereof and a statement that the English translation is accurate if the latest international work product is not in the English language;

(7) Applicant must submit an IDS listing the documents cited by the PCT examiner in the international work product along with copies of documents except U.S. patents or U.S. patent application publications.

The request to participate in the PCT-PPH pilot program and petition comply with the above requirements. Accordingly, the above-identified application has been accorded "special" status.

Telephone inquiries concerning this decision should be directed to Michelle R. Eason at 571-272-4231.

All other inquiries concerning the examination or status of the application is accessible in the PAIR system at http://www.uspto.gov/ebc.index.html.

This application will be forwarded to the examiner for action on the merits commensurate with this decision.

Thurman K. Page
Petitions Examiner
Office of Petitions

UNITED STATES PATENT AND TRADEMARK OFFICE

Commissioner for Patents
United States Patent and Trademark Office
P.O. Box 1450
Alexandria, VA 22313-1450
www.uspto.gov

SEED INTELLECTUAL PROPERTY LAW GROUP, PLLC
701 FIFTH AVENUE, SUITE 5400
SEATTLE, WA 98104

MAILED

JUL 19 2011

OFFICE OF PETITIONS

In re Application of :
Daigo IMANO, et *al.* :
Application No. 12/885,293 : DECISION GRANTING PETITION
Filed: September 17, 2010 : UNDER 37 CFR 1.313(c)(2)
Attorney Docket No. **734156.438D1** :

This is a decision on the petition under 37 CFR 1.313(c)(2), filed July 14, 2011, to withdraw the above-identified application from issue after payment of the issue fee.

The petition is **GRANTED**.

The above-identified application is withdrawn from issue for consideration of a submission under 37 CFR 1.114 (request for continued examination). See 37 CFR 1.313(c)(2).

Petitioner is advised that the issue fee paid on June 24, 2011 cannot be refunded. If, however, this application is again allowed, petitioner may request that it be applied towards the issue fee required by the new Notice of Allowance.[1]

Telephone inquiries should be directed to the undersigned at (571) 272-7253.

This application is being referred to Technology Center AU 2821 for processing of the request for continued examination under 37 CFR 1.114 and for consideration of the concurrently filed information disclosure statement.

/Monica A. Graves/
Petitions Examiner, Office of Petitions

[1] *The request to apply the issue fee to the new Notice may be satisfied by completing and returning the new Part B – Fee(s) Transmittal Form (along with any balance due at the time of submission). Petitioner is advised that the Issue Fee Transmittal Form must be completed and timely submitted to avoid abandonment of the application.*

UNITED STATES PATENT AND TRADEMARK OFFICE

UNITED STATES DEPARTMENT OF COMMERCE
United States Patent and Trademark Office
Address: COMMISSIONER FOR PATENTS
P.O. Box 1450
Alexandria, Virginia 22313-1450
www.uspto.gov

APPLICATION NO.	FILING DATE	FIRST NAMED INVENTOR	ATTORNEY DOCKET NO.	CONFIRMATION NO.
12/885,301	09/17/2010	Xiaoyuan TU	AiLive-094C3	8421

26797 7590 01/12/2011
SILICON VALLEY PATENT AGENCY
7394 WILDFLOWER WAY
CUPERTINO, CA 95014

EXAMINER	
SPARKS, DONALD ALAN	
ART UNIT	PAPER NUMBER
2129	

NOTIFICATION DATE	DELIVERY MODE
01/12/2011	ELECTRONIC

Please find below and/or attached an Office communication concerning this application or proceeding.

The time period for reply, if any, is set in the attached communication.

Notice of the Office communication was sent electronically on above-indicated "Notification Date" to the following e-mail address(es):

uspatents@sbcglobal.net

UNITED STATES PATENT AND TRADEMARK OFFICE

Commissioner for Patents
United States Patent and Trademark Office
P.O. Box 1450
Alexandria, VA 22313-1450
www.uspto.gov

SILICON VALLEY PATENT AGENCY
7394 WILDFLOWER WAY
CUPERTINO CA 95014

In re Application of:
Xiaoyuan Tu, et al.
Serial No.: 12/885,301
Filed: September 17, 2010
Docket: AiLive-094C3
Title: SYSTEMS AND METHODS FOR MOTION RECOGNITION USING MULTIPLE SENSING STREAMS

DECISION ON PETITION TO MAKE SPECIAL FOR NEW APPLICATION UNDER 37 C.F.R. § 1.102 & M.P.E.P. § 708.02

This is a decision on the petition filed on November 17, 2010 to make the above-identified application special for accelerated examination procedure under 37 C.F.R. § 1.102(d).

The petition to make the application special is **DISMISSED**.

REGULATION AND PRACTICE

A grantable petition to make special under 37 C.F.R. § 1.102(d) and pursuant to the "Change to Practice for Petitions in Patent Applications to Make Special and for Accelerated Examination" published in the Federal Register on June 26, 2006 (71 Fed. Reg. 36323), must satisfy the following conditions:

I. Conditions Regarding the Application:

1. the application must be a non-reissue utility or design application filed under 37 CFR 1.111(a);

2. the application, the petition and the required fees must be filed electronically using the USPTO's electronic filing system (EFS), or EFS-web; if not filed electronically, a statement asserting that EFS and EFS-web were not available during the normal business hours.

3. at the time of filing, the application must be complete under 37 CFR 1.51 and in condition for examination;

4. the application must contain three or fewer independent claims and twenty or fewer total claims and the claims must be directed to a single invention.

II. Conditions Regarding the Petition:

The petition must:

1. be filed with the application;

2. include a statement that applicant agrees not to separately argue the patentability of any independent claim during any appeal in the application;

3. include a statement that applicant agrees to make an election without traverse in a telephone interview.

4. include a statement that applicant agrees to conduct such an interview when requested by the examiner.

5. include a statement, made based on a good faith belief, that a preexamination search in compliance with the following requirements, was conducted, including an identification of the field of search by United States class and subclass, where applicable, and for database searches, the search logic or chemical structure or sequence used as a query, the name of the file(s) searched and the database service, and the date of the search.

The preexamination search must:

5.1 involve U.S. patents and patent application publications, foreign patent documents, and non-patent literature, unless the applicant can justify with reasonable certainty that no references more pertinent than those already identified are likely to be found in the eliminated sources and includes such a justification with this statement;

5.2. be directed to the claimed invention and encompass all of the features of the claims, giving the claims the broadest reasonable interpretation;

5.3. encompass the disclosed features that may be claimed.

6. must provide in support of the petition an accelerated examination support document. An accelerated examination support document must include:

6.1. an information disclosure statement (IDS) in compliance with 37 CFR 1.98 citing each reference deemed most closely related to the subject matter of each of the claims;

6.2. an identification of all the limitations in the claims that are disclosed by the reference specifying where the limitation is disclosed in the cited reference;

6.3. a detailed explanation of how each of the claims are patentable over the references cited with particularity required by 37 CFR 1.111(b) and (c);

6.4. a concise statement of the utility of the invention as defined in each of the independent claims (unless the application is a design application);

6.5. a showing of where each limitation of the claims finds support under 35 USC 112, first paragraph, in the written description of the specification. If applicable, the showing must also identify: (1) each means- (or step) plus-function claim element that invokes consideration under 35 UDC 112, sixth paragraph; and (2) the structure, material, or acts in the specification that corresponds to each means- (or step) plus-function claim element that invokes consideration under 35 UDC 112, sixth paragraph; if the application claims the benefit of one or more applications under title 35, United States Code, the showing must also include where each limitation of the claims finds support under 35 USC 112, first paragraph, in each such application in which such supports exists;

6.6. an identification of any cited references that may be disqualified under 35 USC 103(c).

REVIEW OF FACTS

The conditions II.1 – II.4, II.5.2, II.5.3, II.6.1, II.5.2, II6.2-.6.4, and II.6.6 above are considered to have been met. However, the petition fails to comply with conditions II.5.1 and II6.5 above. Therefore, the petition fails to meet the required conditions to be accorded special status under the accelerated examination procedure.

Regarding the requirement of MPEP § 708.02(a)(I.)(H)[1] and item II. 5.1 above, the preexamination search does not include U. S. Patents in class 706, particularly subclass 20, which covers subject matter pertaining to "Artificial Intelligence: Neural Network" with Classification or Recognition" to which the instant invention as claimed, is directed. It is noted that the proper classification of the instant application has been determined to be class 706 subclass 20, thus a search in this area is expected to provide a full coverage of where the most pertinent references are most likely to be found.

With respect to the requirement of MPEP § 708.02(a)(I.)(I)(5) and item 6.5 above, the Accelerated Examination Support Document identifies specific portions of the instant specification as providing support under 35 U.S.C. 112, First paragraph for each claim. However similar identification of support is required for each claim limitation in each of application Serial Numbers 12/709520 and 11/486997, from which the instant application claims benefit under 35 U.S.C. 120.

DECISION

For the above-stated reasons, the petition is **dismissed**. The examiner for action in its regular turn will therefore take up the application.

Petitioner is given a single opportunity to perfect the petition. Any request for reconsideration of this decision must be submitted within 1 (one) month or 30 (thirty) days, whichever is longer, (no extension of time under 37 CFR 1.136(a)) from the date of this decision in order to be considered timely. Any request for reconsideration must address the deficiencies indicated above.

Petitioner is reminded that, upon granting of the special status of the application on request for reconsideration, the application will be processed expeditiously. However, due to the dismissal of the instant petition, examination may not be completed within twelve months of the filing date of the application.

Any inquiry regarding this decision should be directed to Kakali Chaki, Quality Assurance Specialist, at (571) 272-3719.

/Kakali Chaki/

Kakali Chaki, Quality Assurance Specialist
Technology Center 2100

[1] MPEP 8th ed. rev 5 August 2006

UNITED STATES PATENT AND TRADEMARK OFFICE

UNITED STATES DEPARTMENT OF COMMERCE
United States Patent and Trademark Office
Address: COMMISSIONER FOR PATENTS
P.O. Box 1450
Alexandria, Virginia 22313-1450
www.uspto.gov

APPLICATION NUMBER	FILING OR 371(C) DATE	FIRST NAMED APPLICANT	ATTY. DOCKET NO./TITLE
12/885,301	09/17/2010	Xiaoyuan TU	AiLive-094C3

CONFIRMATION NO. 8421

26797
SILICON VALLEY PATENT AGENCY
7394 WILDFLOWER WAY
CUPERTINO, CA 95014

NONPUBLICATION RESCISSION LETTER

OC000000045755668

Date Mailed: 02/01/2011

Communication Regarding Rescission Of Nonpublication Request and/or Notice of Foreign Filing

Applicant's rescission of the previously-filed nonpublication request and/or notice of foreign filing is acknowledged. The paper has been reflected in the Patent and Trademark Office's (USPTO's) computer records so that the earliest possible projected publication date can be assigned.

The projected publication date is 05/12/2011.

If applicant rescinded the nonpublication request before or on the date of "foreign filing,"[1] then no notice of foreign filing is required.

If applicant foreign filed the application after filing the above application and before filing the rescission, and the rescission did not also include a notice of foreign filing, then a notice of foreign filing (not merely a rescission) is required to be filed within 45 days of the date of foreign filing. See 35 U.S.C. § 122(b)(2)(B)(iii), and Clarification of the United States Patent and Trademark Office's Interpretation of the Provisions of 35 U.S.C. § 122(b)(2)(B)(ii)-(iv), 1272 Off. Gaz. Pat. Office 22 (July 1, 2003).

If a notice of foreign filing is required and is not filed within 45 days of the date of foreign filing, then the application becomes abandoned pursuant to 35 U.S.C. § 122(b)(2)(B)(iii). In this situation, applicant should either file a petition to revive or notify the Office that the application is abandoned. See 37 CFR 1.137(f). Any such petition to revive will be forwarded to the Office of Petitions for a decision. Note that the filing of the petition will not operate to stay any period of reply that may be running against the application.

Questions regarding petitions to revive should be directed to the Office of Petitions at (571) 272-3282.

[1] Note, for purpose of this notice, that "foreign filing" means "filing an application directed to the same invention in another country, or under a multilateral international agreement, that requires publication of applications 18 months after filing".

/ttran/

Office of Data Management, Application Assistance Unit (571) 272-4000, or (571) 272-4200, or 1-888-786-0101

UNITED STATES PATENT AND TRADEMARK OFFICE

UNITED STATES DEPARTMENT OF COMMERCE
United States Patent and Trademark Office
Address: COMMISSIONER FOR PATENTS
P.O. Box 1450
Alexandria, Virginia 22313-1450
www.uspto.gov

APPLICATION NO.	FILING DATE	FIRST NAMED INVENTOR	ATTORNEY DOCKET NO.	CONFIRMATION NO.
12/885,301	09/17/2010	Xiaoyuan TU	AiLive-094C3	8421

26797 7590 03/11/2011

SILICON VALLEY PATENT AGENCY
7394 WILDFLOWER WAY
CUPERTINO, CA 95014

EXAMINER	
GAFFIN, JEFFREY A	

ART UNIT	PAPER NUMBER
2117	

NOTIFICATION DATE	DELIVERY MODE
03/11/2011	ELECTRONIC

Please find below and/or attached an Office communication concerning this application or proceeding.

The time period for reply, if any, is set in the attached communication.

Notice of the Office communication was sent electronically on above-indicated "Notification Date" to the following e-mail address(es):

uspatents@sbcglobal.net

UNITED STATES PATENT AND TRADEMARK OFFICE

Commissioner for Patents
United States Patent and Trademark Office
P.O. Box 1450
Alexandria, VA 22313-1450
www.uspto.gov

SILICON VALLEY PATENT AGENCY
7394 WILDFLOWER WAY
CUPERTINO, CA 95014

In re Application of: TU, et al.
Serial No.: 12/885,301
Filed: September 17, 2010
Docket: AiLive-094C3
Title: **SYSTEMS AND METHODS FOR MOTION RECOGNITION USING MULTIPLE SENSING STREAMS**

DECISION ON PETITION TO MAKE SPECIAL FOR NEW APPLICATION UNDER 37 C.F.R. § 1.102 & M.P.E.P. § 708.02

This is a decision on the renewed petition filed on February 08, 2011 to make the above-identified application special for accelerated examination procedure under 37 C.F.R. § 1.102(d). The original petition, filed on September 17, 2010, was dismissed in a decision mailed on January 12, 2011.

The petition to make the application special is **GRANTED**.

The application is eligible for accelerated examination and the petition complies with the conditions for granting the application special status pursuant to the "Change to Practice for Petitions in Patent Applications to Make Special and for Accelerated Examination" published June 26, 2006, in the Federal Register. (71 Fed. Reg. 36323).

The prosecution of the instant application will be conducted expeditiously according to the following guidelines.

1. The application will be docketed to an examiner and taken up for action within two weeks of the date of this decision.

2. Restriction Practice:

If the examiner determines that the claims are not directed to a single invention, a telephone request to elect one single invention will be made pursuant to MPEP 812.01. As a prerequisite to the grant of this petition, the applicant has agreed to make an oral election, by telephone, without traverse. If the applicant refuses to make an election without traverse, or the examiner cannot reach the applicant after a reasonable effort, the examiner will treat the first claimed invention (invention defined by claim 1) as having being constructively elected without traverse for examination.

3. Office action:
If it is determined that, after appropriate consultation, there is a potential rejection or any other issue to be addressed, the examiner will telephone the applicant and arrange an interview to discuss and resolve the issue. An Office action, other than a Notice of Allowance and Fee(s) Due (Notice of Allowance), will not be issued unless either: 1) an interview was conducted but did not result in agreed to action that places the application in condition for allowance, or, 2) a determination is made that an interview would be unlikely to result in the application being placed in condition for allowance, and 3) an internal conference has been held to review any rejection of any claim.

4. Time for Reply:
An Office action other than a Notice of Allowance or a final Office action will set a shortened statutory period of one month or thirty days, whichever is longer, for reply with no extension of time available under 37 CFR 1.136(a). Failure to timely file a reply within this non-extendible period for reply will result in the abandonment of the application.

5. Reply by Applicant:
A timely reply to an Office action other than the Notice of Allowance must be submitted electronically via EFS or EFS-web and limited to addressing the rejections, objections and requirement made. Any amendment that attempts to: 1) add claims which would result in more than three pending independent claims or more than twenty pending total claims; 2) present claims not encompassed by the pre-examination search or an updated accelerated examination support document; or 3) present claims that are directed a non-elected invention or an invention other than that previously claimed and examined in the application, will be treated as not fully responsive and will not be entered.

For any amendment to the claims (including any new claim) that is not encompassed by the accelerated examination support document, applicant must provide an updated accelerated examination support document that encompasses the amended or new claims at the time of filing of the amendment.

To proceed expeditiously with the examination, it is recommended that a reply with amendments made to any claim or with any new claim being added be accompanied by an updated accelerated examination support document or a statement explaining how the amended or new claim is supported by the original accelerated examination support document.

6. Information Disclosure Statement (IDS):
Any IDS filed during prosecution must be submitted electronically via EFS or EFS-web, accompanied by an updated accelerated examination support document, and be in compliance with 37 CFR 1.97 and 1.98.

7. Post-Allowance Processing:
To expedite processing of the allowed application into a patent, the applicant must: 1) pay the required fees within one month of the date of the Notice of Allowance, and 2) not file any post allowance papers not required by the Office. In no event may the issue fee be paid and accepted later than three months from the date of the Notice of Allowance.

8. After-Final and Appeal Procedures:
   To expedite prosecution, after receiving the final Office action, applicant must: 1) promptly file a notice of appeal, an appeal brief and appeal fees; and 2) not request a pre-appeal brief conference.

   Any amendment, affidavit or other evidence filed after final Office action must comply with applicable rules and the requirements outlined in numbered paragraphs 5 and 6 above.

   On appeal, the application will proceed according to normal appeal procedures. After appeal, the application will again be treated special.

9. Proceedings Outside the Normal Examination Process:
   If the application becomes involved in a proceeding that is outside the normal examination process (e.g., a secrecy order, national security review, interference proceeding, petitions under 37 CFR 1.181, 182 or 183), the application will be treated special before and after such proceeding.

10. Final Disposition:
    The twelve-month goal of this accelerated examination procedure ends with a final disposition. The mailing of a final Office action, a Notice of Allowance, the filing of a Notice of Appeal, or the filing of a Request for Continued Examination (RCE) is the final disposition.

If, during prosecution, a paper is not filed electronically using EFS-web, a reply is filed but is not fully responsive, the application is involved in an appeal, or a proceeding outside normal examination process, the application will still be examined expeditiously, however, the final disposition may occur more than twelve months from the filing of the application. In addition, Applicant is reminded that due to the dismissal of the previous petition submission, examination may not be completed within twelve months of the filing date of the application.

Any inquiry regarding this decision should be directed to Brian Johnson, Quality Assurance Specialist, at (571) 272-3595. If attempts to reach the undersigned by telephone are unsuccessful, Kakali Chaki, Quality Assurance Specialist, can be reached at (571) 272-3719.

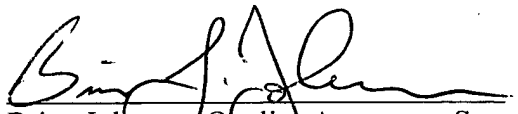

Brian Johnson, Quality Assurance Specialist
Technology Center 2100

UNITED STATES PATENT AND TRADEMARK OFFICE

UNITED STATES DEPARTMENT OF COMMERCE
United States Patent and Trademark Office
Address: COMMISSIONER FOR PATENTS
P.O. Box 1450
Alexandria, Virginia 22313-1450
www.uspto.gov

APPLICATION NO.	FILING DATE	FIRST NAMED INVENTOR	ATTORNEY DOCKET NO.	CONFIRMATION NO.
12/885,321	09/17/2010	Marc Wenger	41523-CIP1-DIV1	8463

23589 7590 10/29/2010

Hovey Williams LLP
10801 Mastin Blvd., Suite 1000
Overland Park, KS 66210

EXAMINER	
ART UNIT	PAPER NUMBER
1782	

MAIL DATE	DELIVERY MODE
10/29/2010	PAPER

Please find below and/or attached an Office communication concerning this application or proceeding.

The time period for reply, if any, is set in the attached communication.

UNITED STATES PATENT AND TRADEMARK OFFICE

Commissioner for Patents
United States Patent and Trademark Office
P.O. Box 1450
Alexandria, VA 22313-1450
www.uspto.gov

10/29/10

CST

In re application of
Marc Wenger et al
Serial No. 12/885,321
Filed: September 17, 2010
For: EXTRUSION PROCESSING OF HIGH MEAT QUANTITY FEEDS USING PRECONDITIONER WITH HOT AIR INPUT

DECISION ON PETITION TO MAKE SPECIAL

This is a decision on the petition filed on September 17, 2010 to make the above-identified application special under the accelerated examination program.

The petition to make the application special is **DISMISSED.**

REGULATION AND PRACTICE

A grantable petition to make special under 37 C.F.R. § 1.102(d) and pursuant to the "Change to Practice for Petitions in Patent Applications to Make Special and for Accelerated Examination" published in the Federal Register on June 26, 2006 (71 Fed. Reg. 36323), must satisfy the following conditions:

I. Conditions Regarding the Application:

1. the application must be a non-reissue utility or design application filed under 37 CFR 1.111(a);

2. the application, the petition and the required fees must be filed electronically using the USPTO's electronic filing system (EFS), or EFS-web; if not filed electronically, a statement asserting that EFS and EFS-web were not available during the normal business hours;

3. at the time of filing, the application must be complete under 37 CFR 1.51 and in condition for examination;

4. the application must contain three or fewer independent claims and twenty or fewer total claims and the claims must be directed to a single invention.

II. Conditions Regarding the Petition:

The petition must:

1. be filed with the application;

2. include a statement that applicant agrees not to separately argue the patentability of any dependent claim during any appeal in the application;

3. include a statement that applicant agrees to make an election without traverse in a telephone interview;

4. include a statement that applicant agrees to conduct such an interview when requested by the examiner;

5. include a statement, made based on a good faith belief, that a preexamination search in compliance with the following requirements, was conducted, including an identification of the field of search by United States class and subclass, where applicable, and for database searches, the search logic or chemical structure or sequence used as a query, the name of the file(s) searched and the database service, and the date of the search.

The preexamination search must:

5.1 involve U.S. patents and patent application publications, foreign patent documents, and non-patent literature, unless the applicant can justify with reasonable certainty that no references more pertinent than those already identified are likely to be found in the eliminated sources and includes such a justification with this statement;

5.2. be directed to the claimed invention and encompass all of the features of the claims, giving the claims the broadest reasonable interpretation;

5.3. encompass the disclosed features that may be claimed.

6. must provide in support of the petition an accelerated examination support document.

An accelerated examination support document must include:

6.1. an information disclosure statement (IDS) in compliance with 37 CFR 1.98 citing each reference deemed most closely related to the subject matter of each of the claims;

6.2. an identification of all the limitations in the claims that are disclosed by the reference specifying where the limitation is disclosed in the cited reference;

6.3. a detailed explanation of how each of the claims are patentable over the references cited with particularity required by 37 CFR 1.111(b) and (c);

6.4. a concise statement of the utility of the invention as defined in each of the independent claims (unless the application is a design application);

6.5. a showing of where each limitation of the claims finds support under 35 USC 112, first paragraph, in the written description of the specification. If applicable, the showing must also identify: (1) each means- (or step) plus-function claim element that invokes consideration under 35 USC 112, sixth paragraph; and (2) the structure, material, or acts in the specification that corresponds to each means- (or step) plus-function claim element that invokes consideration under 35 USC 112, sixth paragraph; if the application claims the benefit of one or more applications under title 35, United States Code, the showing must also include where each limitation of the claims finds support under 35 USC 112, first paragraph, in each such application in which such supports exists;

6.6. an identification of any cited references that may be disqualified under 35 USC 103(c).

REVIEW OF FACTS

The conditions regarding the application (section I, subsections 1-4) discussed above are considered to have been met. Additionally, the conditions regarding the petition, section II, subsections 1-4 and 6, are considered to have been met. However, the petition fails to comply with condition II, subsection 5.

It appears that the search is incomplete. Note that a search in Class 366/subclasses 76.1, 76.3, 76.4, 79, 83, 84, 85, 91 and 148; Class 425/subclasses 200, 204, 205, 207 and 209; and Class 99, subclasses 348, 467, 474, 477, 525, 529, 530 and 531 is also required.

Therefore, the petition fails to meet the required conditions to be accorded special status under the accelerated examination procedure.

DECISION

For the above-stated reasons, the petition is dismissed. The application will therefore be taken up by the examiner in its regular turn.

Petitioner is given a single opportunity to perfect the petition. Any request for reconsideration of this decision must be submitted within 1 (one) month or 30 (thirty) days, whichever is longer, (no extension of time under 37 CFR 1.136(a)) from the date of this decision in order to be considered timely. Any request for reconsideration must address the deficiencies indicated above.

Petitioner is reminded that, upon granting of the special status of the application on request for reconsideration, the application will be processed expeditiously. However, due to the dismissal of the instant petition, examination may not be completed within twelve months of the filing date of the application.

Any inquiry regarding this decision should be directed to Christine Tierney, Quality Assurance Specialist, at (571) 272-1055.

/Christine Tierney/

Christine Tierney
Quality Assurance Specialist
Technology Center 1700

UNITED STATES PATENT AND TRADEMARK OFFICE

UNITED STATES DEPARTMENT OF COMMERCE
United States Patent and Trademark Office
Address: COMMISSIONER FOR PATENTS
P.O. Box 1450
Alexandria, Virginia 22313-1450
www.uspto.gov

APPLICATION NO.	FILING DATE	FIRST NAMED INVENTOR	ATTORNEY DOCKET NO.	CONFIRMATION NO.
12/885,321	09/17/2010	Marc Wenger	41523-CIP1-DIV1	8463

23589 7590 12/22/2010

Hovey Williams LLP
10801 Mastin Blvd., Suite 1000
Overland Park, KS 66210

EXAMINER	
ART UNIT	PAPER NUMBER
1782	

MAIL DATE	DELIVERY MODE
12/22/2010	PAPER

Please find below and/or attached an Office communication concerning this application or proceeding.

The time period for reply, if any, is set in the attached communication.

UNITED STATES PATENT AND TRADEMARK OFFICE

Commissioner for Patents
United States Patent and Trademark Office
P.O. Box 1450
Alexandria, VA 22313-1450
www.uspto.gov

CST

DEC 2 2 2010

In re application of :
Marc Wenger et al :
Serial No. 12/885,321 : DECISION ON PETITION
Filed: September 17, 2010 : TO MAKE SPECIAL
For: EXTRUSION PROCESSING OF HIGH :
MEAT QUANTITY FEEDS USING :
PRECONDITIONER WITH HOT AIR INPUT :

This is a decision on the Request for Reconsideration of Petition to Make Special under the Accelerated Examination Program filed on November 19, 2010 to make the above-identified application special.

The petition to make the application special is **GRANTED.**

The application is eligible for accelerated examination and the petition complies with the conditions for granting the application special status pursuant to the "Change to Practice for Petitions in Patent Applications to Make Special and for Accelerated Examination" published June 26, 2006, in the Federal Register. (71 Fed. Reg. 36323).

The prosecution of the instant application will be conducted expeditiously according to the following guidelines.

1. The application will be docketed to an examiner and taken up for action within two weeks of the date of this decision.

2. Restriction Practice:
If the examiner determines that the claims are not directed to a single invention, a telephone request to elect one single invention will be made pursuant to MPEP 812.01. As a prerequisite to the grant of this petition, the applicant has agreed to make an oral election, by telephone, without traverse. If the applicant refuses to make an election without traverse, or the examiner cannot reach the applicant after a reasonable effort, the examiner will treat the first claimed invention (invention defined by claim 1) as having being constructively elected without traverse for examination.

3. Office action:
   If it is determined that, after appropriate consultation, there is a potential rejection or any other issue to be addressed, the examiner will telephone the applicant and arrange an interview to discuss and resolve the issue. An Office action, other than a Notice of Allowance and Fee(s) Due (Notice of Allowance), will not be issued unless either: 1) an interview was conducted but did not result in agreed to action that places the application in condition for allowance, or, 2) a determination is made that an interview would be unlikely to result in the application being placed in condition for allowance, and 3) an internal conference has been held to review any rejection of any claim.

4. Time for Reply:
   An Office action other than a Notice of Allowance or a final Office action will set a shortened statutory period of one month or thirty days, whichever is longer, for reply with no extension of time available under 37 CFR 1.136(a). Failure to timely file a reply within this non-extendible period for reply will result in the abandonment of the application.

5. Reply by Applicant:
   A timely reply to an Office action other than the Notice of Allowance must be submitted electronically via EFS or EFS-web and limited to addressing the rejections, objections and requirement made. Any amendment that attempts to: 1) add claims which would result in more than three pending independent claims or more than twenty pending total claims; 2) present claims not encompassed by the pre-examination search or an updated accelerated examination support document; or 3) present claims that are directed a non-elected invention or an invention other than that previously claimed and examined in the application, will be treated as not fully responsive and will not be entered.

   For any amendment to the claims (including any new claim) that is not encompassed by the accelerated examination support document, applicant must provide an updated accelerated examination support document that encompasses the amended or new claims at the time of filing of the amendment.

   To proceed expeditiously with the examination, it is recommended that a reply with amendments made to any claim or with any new claim being added be accompanied by an updated accelerated examination support document or a statement explaining how the amended or new claim is supported by the original accelerated examination support document.

6. Information Disclosure Statement (IDS):
   Any IDS filed during prosecution must be submitted electronically via EFS or EFS-web, accompanied by an updated accelerated examination support document, and be in compliance with 37 CFR 1.97 and 1.98.

7. Post-Allowance Processing:
   To expedite processing of the allowed application into a patent, the applicant must: 1) pay the required fees within one month of the date of the Notice of Allowance, and 2) not file any post allowance papers not required by the Office. In no event may the issue fee be paid and accepted later than three months from the date of the Notice of Allowance.

8. After-Final and Appeal Procedures:
   To expedite prosecution, after receiving the final Office action, applicant must: 1) promptly file a notice of appeal, an appeal brief and appeal fees; and 2) not request a pre-appeal brief conference.

   Any amendment, affidavit or other evidence filed after final Office action must comply with applicable rules and the requirements outlined in numbered paragraphs 5 and 6 above.

   On appeal, the application will proceed according to normal appeal procedures. After appeal, the application will again be treated special.

9. Proceedings Outside the Normal Examination Process:
   If the application becomes involved in a proceeding that is outside the normal examination process (e.g., a secrecy order, national security review, interference proceeding, petitions under 37 CFR 1.181, 182 or 183), the application will be treated special before and after such proceeding.

10. Final Disposition:
    The twelve month goal of this accelerated examination procedure ends with a final disposition. The mailing of a final Office action, a Notice of Allowance, the filing of a Notice of Appeal, or the filing of a Request for Continued Examination (RCE) is the final disposition.

If, during prosecution, a paper is not filed electronically using EFS-web, a reply is filed but is not fully responsive, the application is involved in an appeal, or a proceeding outside normal examination process, the application will still be examined expeditiously, however, the final disposition may occur more than twelve months from the filing of the application.

Any inquiry regarding this decision should be directed to Christine Tierney, Quality Assurance Specialist, at (571) 272-1055.

/Christine Tierney/

Christine Tierney
Quality Assurance Specialist
Technology Center 1700

UNITED STATES PATENT AND TRADEMARK OFFICE

UNITED STATES DEPARTMENT OF COMMERCE
United States Patent and Trademark Office
Address: COMMISSIONER FOR PATENTS
P.O. Box 1450
Alexandria, Virginia 22313-1450
www.uspto.gov

APPLICATION NO.	FILING DATE	FIRST NAMED INVENTOR	ATTORNEY DOCKET NO.	CONFIRMATION NO.
12/885,325	09/17/2010	Thomas Zuber	1188-1007	8471

73276 7590 12/16/2010

ZUBER & TAILLIEU LLP
777 SOUTH FIGUEROA ST., 37th FLOOR
LOS ANGELES, CA 90017

EXAMINER	
LO, WEILUN	

ART UNIT	PAPER NUMBER
2179	

NOTIFICATION DATE	DELIVERY MODE
12/16/2010	ELECTRONIC

Please find below and/or attached an Office communication concerning this application or proceeding.

The time period for reply, if any, is set in the attached communication.

Notice of the Office communication was sent electronically on above-indicated "Notification Date" to the following e-mail address(es):

patentgroup@ztllp.com

UNITED STATES PATENT AND TRADEMARK OFFICE

Commissioner for Patents
United States Patent and Trademark Office
P.O. Box 1450
Alexandria, VA 22313-1450
www.uspto.gov

ZUBER & TAILLIEU LLP
777 SOUTH FIGUEROA ST., 37th FLOOR
LOS ANGELES CA 90017

In re Application of:
ZUBER, Thomas
Serial No.: 12/885,325
Filed: September 17, 2010
Docket: 1188-1007
Title:
SYSTEM AND METHOD OF RANKING AND SEARCHING FOR PROFESSIONAL PROFILES

DECISION ON PETITION TO MAKE SPECIAL FOR NEW APPLICATION UNDER 37 C.F.R. § 1.102 & M.P.E.P. § 708.02

This is a decision on the petition filed on September 17, 2010 to make the above-identified application special for accelerated examination procedure under 37 C.F.R. § 1.102(d).

The petition to make the application special is **DISMISSED**.

REGULATION AND PRACTICE

A grantable petition to make special under 37 C.F.R. § 1.102(d) and pursuant to the "Change to Practice for Petitions in Patent Applications to Make Special and for Accelerated Examination" published in the Federal Register on June 26, 2006 (71 Fed. Reg. 36323), must satisfy the following conditions:

I. Conditions Regarding the Application:

1. the application must be a non-reissue utility or design application filed under 37 CFR 1.111(a);

2. the application, the petition and the required fees must be filed electronically using the USPTO's electronic filing system (EFS), or EFS-web; if not filed electronically, a statement asserting that EFS and EFS-web were not available during the normal business hours.

3. at the time of filing, the application must be complete under 37 CFR 1.51 and in condition for examination;

4. The application must contain three or fewer independent claims and twenty or fewer total claims and the claims must be directed to a single invention.

II. Conditions Regarding the Petition:

The petition must:

1. be filed with the application;

2. include a statement that applicant agrees not to separately argue the patentability of any independent claim during any appeal in the application;

3. include a statement that applicant agrees to make an election without traverse in a telephone interview.

4. include a statement that applicant agrees to conduct such an interview when requested by the examiner.

5. include a statement, made based on a good faith belief, that a preexamination search in compliance with the following requirements, was conducted, including an identification of the filed of search by United States class and subclass, where applicable, and for database searches, the search logic or chemical structure or sequence used as a query, the name of the file(s) searched and the database service, and the date of the search.

The preexamination search must:

5.1 involve U.S. patents and patent application publications, foreign patent documents, and non-patent literature, unless the applicant can justify with reasonable certainty that no references more pertinent than those already identified are likely to be found in the eliminated sources and includes such a justification with this statement;

5.2. be directed to the claimed invention and encompass all of the features of the claims, giving the claims the broadest reasonable expectation;

5.3. encompass the disclosed features that may be claimed.

6. must provide in support of the petition an accelerated examination support document. An accelerated examination support document must include:

6.1. an information disclosure statement (IDS) in compliance with 37 CFR 1.98 citing each reference deemed most closely related to the subject matter of each of the claims;

6.2. an identification of all the limitations in the claims that are disclosed by the reference specifying where the limitation is disclosed in the cited reference;

6.3. a detailed explanation of how each of the claims are patentable over the references cited with particularity required by 37 CFR 1.111(b) and (c);

6.4. a concise statement of the utility of the invention as defined in each of the independent claims (unless the application is a design application);

6.5. a showing of where each limitation of the claims finds support under 35 USC 112, first paragraph, in the written description of the specification. If applicable, the showing must also identify: (1) each means- (or step) plus-function claim element that invokes consideration under 35 UDC 112, sixth paragraph; and (2) the structure, material, or acts in the specification that corresponds to each means- (or step) plus-function claim element that invokes consideration under 35 UDC 112, sixth paragraph; if the application claims the benefit of one or more applications under title 35, United States Code, the showing must also include where each limitation of the claims finds support under 35 USC 112, first paragraph, in each such application in which such supports exists;

6.6. an identification of any cited references that may be disqualified under 35 USC 103(c).

REVIEW OF FACTS

The conditions I1-I4, II1-II5, II5.2, II5.3, II6.1, II6.4, and II6.6 above are considered to have been met.

However, the petition fails to comply with conditions II5.1, II6.2, II6.3, and II6.5 above, for the reasons listed below. Therefore, the petition fails to meet the required conditions to be accorded special status under the accelerated examination procedure.

ANALYSIS

Item II5.1 states the "preexamination search much: [ ] involve U.S. patents and patent application publications, foreign patent documents, and non-patent literature, unless the applicant can justify with reasonable certainty that no references more pertinent than those already identified are likely to be found in the eliminated sources and includes such a justification with this statement." A review of the preexamination search statement reveals that no search was conducted in Class 715 (Data Processing: Presentation Processing or Document, Operator Interface Processing, and Screen Saver Display Processing), Subclass 751 (Computer supported collaborative work between plural users), the current classification of the instant application. In order to comply with this requirement, petitioner must conduct a search of at least this Class/Subclass. Alternatively, "the [petitioner] can justify with reasonable certainty that no references more pertinent than those already identified are likely to be found in the eliminated sources and includes such a justification with this statement."

Item II6.2 states the accelerated examination support document must "[identify] all the limitations in the claims that are disclosed by the reference specifying where the limitation is disclosed in the cited reference." On page 3 of the support document, the "International Patent" to Chang (TW 288358) has been identified by the petitioner as a "REFERENCE DEEMED MOST CLOSELY RELATED" to the claimed invention. However, no explanation can be found in the document mapping the instant claims to the Chang reference. Furthermore, on the same page of the document, Lucas et al. should be identified as the inventor of US 20060167942, not Francis et al.

Item II6.3 states the accelerated examination support document must include "a detailed explanation of how each of the claims are patentable over the references cited with particularity required by 37 CFR 1.111(b) and (c)." To comply with this requirement, petitioner provides the following statement on page 68 of the support document:

> "All of the references identified above fail to at least teach or suggest numerous elements in the above eighteen claims. Therefore, independent claims 1, 10 and 11, and dependent claims 2-9, are patentably distinguishable over each of these references, either alone or in combination.

> Several of the references above generally discuss elements found in the claims, but it is clear that several of the specific concepts set forth in the claims are not taught by the references and are therefore patentable. For example, with reference to claim 1, Applicant's invention is directed to a profile ranking tool for ranking professionals based on values assigned to their profiles within a secure, server-based social networking community. Applicant's invention contemplates various techniques for assigning values to rank professional profiles to permit members of the online community to perform one or more searches for professionals. None of the references specifically teach allowing a member to rank profiles of professionals based on an overall quality score assigned to each profile in accordance with an assessment of the competence of the owner of the profile. Furthermore, none of the references teach an overall quality score that is a function of a peer rating factor and at least one or more of an education factor, an experience factor, and a work products factor, so that the overall quality score is a function of data present in the profile. None of these features contemplated by Applicant's invention are disclosed in any of the references, and therefore independent claims 1, 10 and 11 are patentable.
>
> Furthermore, many of the elements disclosed in Applicant's dependent claims are also not taught by any of the references, either alone or in combination. While some of the references discuss or allude to certain aspects of dependent claims, it is clear that the specific concepts are not disclosed. For example, Applicant's invention includes attributing an education factor to each profile. The education factor of each profile is a function of a value assigned to at least one school attended by the member owning the profile. The value of each school is a function of a value assigned to each school as a function of peer value assigned to the school. These specific concepts are not disclosed by any of the references. Therefore, and especially when combined with the inventive features of claim 1, Applicant's dependent claims 2-9 are patentable."

However, these three paragraphs fail to provide "a detailed explanation of how each of the claims are patentable over the references cited with particularity required by 37 CFR 1.111(b) and (c)" (emphasis added).

Moreover, the explanation of patentability appears inconsistent with identification of limitations disclosed by the references. For instance, on page 5 of the support document, petitioner points to the abstract and paragraphs [0017] and [0025] of LeClair for disclosing the claim limitation "wherein the overall quality score is a function of a peer rating factor and at least one or more of the following group: an education factor, an experience factor, a work products factor, and a familiarity factor, so that the overall quality score is a function of data present in the profile itself." However, in the above explanation of patentability, petition states "Furthermore, none of the references teach an overall quality score that is a function of a peer rating factor and at least one or more of an education factor, an experience factor, and a work products factor, so that the overall quality score is a function of data present in the profile." Such apparent inconsistency must be removed from the support document.

Regarding item II6.5, on page 69 of the support document, petitioner states "Support in the disclosure under 35 USC 112, first paragraph, is found throughout the specification and at least at pp. 5-17 of the same, and in Figs. 1-3 of the application, where profiles maintained by member o f an online community and ranked in accordance with present invention are shown." This general statement fails to meet the requirements of item II.6.5. Applicant is required to point out where in the written description of the specification each limitation of the claims finds support under 35 USC 112, first paragraph. Furthermore, this application claims priority from provisional application 61/277,025. Accordingly, in order to comply with this item, the support document must include where each limitation of the claims finds support under 35 USC 112, first paragraph, in the specification of the instant application and the specification of 61/277,025.

DECISION

For the above-stated reasons, the petition is **DISMISSED**.

Petitioner is given a single opportunity to perfect the petition. Any request for reconsideration of this decision must be submitted within 1 (one) month or 30 (thirty) days, whichever is longer, (no extension of time under 37 CFR 1.136(a)) from the date of this decision in order to be considered timely. Any request for reconsideration must address the deficiencies indicated above.

Petitioner is reminded that, upon granting of the special status of the application on request for reconsideration, the application will be processed expeditiously. However, due to the dismissal of the instant petition, examination may not be completed within twelve months of the filing date of the application.

Any inquiry regarding this decision should be directed to Eddie C. Lee at (571) 272-1732.

/Eddie C. Lee/

Eddie C. Lee
Quality Assurance Specialist
Technology Center 2100

UNITED STATES PATENT AND TRADEMARK OFFICE

UNITED STATES DEPARTMENT OF COMMERCE
United States Patent and Trademark Office
Address: COMMISSIONER FOR PATENTS
P.O. Box 1450
Alexandria, Virginia 22313-1450
www.uspto.gov

APPLICATION NO.	FILING DATE	FIRST NAMED INVENTOR	ATTORNEY DOCKET NO.	CONFIRMATION NO.
12/885,325	09/17/2010	Thomas Zuber	1188-1007	8471

73276 7590 02/11/2011

ZUBER & TAILLIEU LLP
777 SOUTH FIGUEROA ST., 37th FLOOR
LOS ANGELES, CA 90017

EXAMINER	
LO, WEILUN	

ART UNIT	PAPER NUMBER
2179	

NOTIFICATION DATE	DELIVERY MODE
02/11/2011	ELECTRONIC

Please find below and/or attached an Office communication concerning this application or proceeding.

The time period for reply, if any, is set in the attached communication.

Notice of the Office communication was sent electronically on above-indicated "Notification Date" to the following e-mail address(es):

patentgroup@ztllp.com

UNITED STATES PATENT AND TRADEMARK OFFICE

Commissioner for Patents
United States Patent and Trademark Office
P.O. Box 1450
Alexandria, VA 22313-1450
www.uspto.gov

ZUBER & TAILLIEU LLP
777 SOUTH FIGUEROA ST., 37th FLOOR
LOS ANGELES CA 90017

In re Application of:
ZUBER, Thomas
Serial No.: 12/885,325
Filed: September 17, 2010
Docket: **1188-1007**
Title: **SYSTEM AND METHOD OF RANKING AND SEARCHING FOR PROFESSIONAL PROFILES**

DECISION ON PETITION TO MAKE SPECIAL FOR NEW APPLICATION UNDER 37 C.F.R. § 1.102 & M.P.E.P. § 708.02

This is a decision on the renewed petition filed on January 14, 2011 to make the above-identified application special for accelerated examination procedure under 37 C.F.R. § 1.102(d). The original petition, submitted on September 17, 2010 was dismissed in the decision mailed on December 16, 2010.

The renewed petition to make the application special is **DENIED**.

REVIEW OF FACTS

The original petition was dismissed for failure to meet the conditions of items II5.1, II6.2, II6.3 and II6.5. The explanation provided in the decision mailed December 16, 2010 is reproduced in it's entirety below.

Item II5.1 states the "preexamination search much: [ ] involve U.S. patents and patent application publications, foreign patent documents, and non-patent literature, unless the applicant can justify with reasonable certainty that no references more pertinent than those already identified are likely to be found in the eliminated sources and includes such a justification with this statement." A review of the preexamination search statement reveals that no search was conducted in Class 715 (Data Processing: Presentation Processing or Document, Operator Interface Processing, and Screen Saver Display Processing), Subclass 751 (Computer supported collaborative work between plural users), the current classification of the instant application. In order to comply with this requirement, petitioner must conduct a search of at least this

Class/Subclass. Alternatively, "the [petitioner] can justify with reasonable certainty that no references more pertinent than those already identified are likely to be found in the eliminated sources and includes such a justification with this statement."

Item II6.2 states the accelerated examination support document must "[identify] all the limitations in the claims that are disclosed by the reference specifying where the limitation is disclosed in the cited reference." On page 3 of the support document, the "International Patent" to Chang (TW 288358) has been identified by the petitioner as a "REFERENCE DEEMED MOST CLOSELY RELATED" to the claimed invention. However, no explanation can be found in the document mapping the instant claims to the Chang reference. Furthermore, on the same page of the document, Lucas et al. should be identified as the inventor of US 20060167942, not Francis et al.

Item II6.3 states the accelerated examination support document must include "a detailed explanation of how each of the claims are patentable over the references cited with particularity required by 37 CFR 1.111(b) and (c)." To comply with this requirement, petitioner provides the following statement on page 68 of the support document:

> "All of the references identified above fail to at least teach or suggest numerous elements in the above eighteen claims. Therefore, independent claims 1, 10 and 11, and dependent claims 2-9, are patentably distinguishable over each of these references, either alone or in combination.
>
> Several of the references above generally discuss elements found in the claims, but it is clear that several of the specific concepts set forth in the claims are not taught by the references and are therefore patentable. For example, with reference to claim 1, Applicant's invention is directed to a profile ranking tool for ranking professionals based on values assigned to their profiles within a secure, server-based social networking community. Applicant's invention contemplates various techniques for assigning values to rank professional profiles to permit members of the online community to perform one or more searches for professionals. None of the references specifically teach allowing a member to rank profiles of professionals based on an overall quality score assigned to each profile in accordance with an assessment of the competence of the owner of the profile. Furthermore, none of the references teach an overall quality score that is a function of a peer rating factor and at least one or more of an education factor, an experience factor, and a work products factor, so that the overall quality score is a function of data present in the profile. None of these features contemplated by Applicant's invention are disclosed in any of the references, and therefore independent claims 1, 10 and 11 are patentable.
>
> Furthermore, many of the elements disclosed in Applicant's dependent claims are also not taught by any of the references, either alone or in combination. While some of the references discuss or allude to certain aspects of dependent claims, it is clear that the specific concepts are not disclosed. For example,

> Applicant's invention includes attributing an education factor to each profile. The education factor of each profile is a function of a value assigned to at least one school attended by the member owning the profile. The value of each school is a function of a value assigned to each school as a function of peer value assigned to the school. These specific concepts are not disclosed by any of the references. Therefore, and especially when combined with the inventive features of claim 1, Applicant's dependent claims 2-9 are patentable."

However, these three paragraphs fail to provide "a detailed explanation of how each of the claims are patentable over the references cited with particularity required by 37 CFR 1.111(b) and (c)" (emphasis added).

Moreover, the explanation of patentability appears inconsistent with identification of limitations disclosed by the references. For instance, on page 5 of the support document, petitioner points to the abstract and paragraphs [0017] and [0025] of LeClair for disclosing the claim limitation "wherein the overall quality score is a function of a peer rating factor and at least one or more of the following group: an education factor, an experience factor, a work products factor, and a familiarity factor, so that the overall quality score is a function of data present in the profile itself." However, in the above explanation of patentability, petition states "Furthermore, none of the references teach an overall quality score that is a function of a peer rating factor and at least one or more of an education factor, an experience factor, and a work products factor, so that the overall quality score is a function of data present in the profile." Such apparent inconsistency must be removed from the support document.

Regarding item II6.5, on page 69 of the support document, petitioner states "Support in the disclosure under 35 USC 112, first paragraph, is found throughout the specification and at least at pp. 5-17 of the same, and in Figs. 1-3 of the application, where profiles maintained by member o f an online community and ranked in accordance with present invention are shown." This general statement fails to meet the requirements of item II.6.5. Applicant is required to point out where in the written description of the specification each limitation of the claims finds support under 35 USC 112, first paragraph. Furthermore, this application claims priority from provisional application 61/277,025. Accordingly, in order to comply with this item, the support document must include where each limitation of the claims finds support under 35 USC 112, first paragraph, in the specification of the instant application and the specification of 61/277,025.

ANALYSIS

Upon carefully reviewing the contents of the "AMENDED ACCELERATED EXAMINATION SUPPORT DOCUMENT," the renewed petition complies with items II5.1 and II6.2. However, the petition continues to fail to meet the conditions of items II6.3 and II6.5.

Regarding item II6.3, starting on page 3 of the amended support document, petitioner identifies 29 US and foreign patent documents as the "references deemed most closely related to the subject matter of the claim." However, petitioner provides "detailed explanation of how each of the claims are patentable over the references cited with particularity required by 37 CFR

1.111(b) and (c)" for only about 13 of the cited references, less than half. Similarly, petitioner identifies 11 non-patent publications as "references deemed most closely related to the subject matter of the claim." However, petitioner provides "detailed explanation of how each of the claims are patentable over" for only a single non-patent publication reference. Therefore, the renewed petition fails to comply with the requirements of item II6.3.

Regarding item II6.5, the "AMENDED ACCELERATED EXAMINATION SUPPORT DOCUMENT" fails to provide a showing where each limitation of the claims finds support under 35 USC 112, first paragraph, in the specification of the provisional application no. 61/277,025, to which the instant application claims priority. Therefore, the renewed petition fails to comply with the requirements of item II6.5.

DECISION

Accordingly, the renewed petition is **DENIED**. The application will therefore be taken up by the examiner for action in its regular turn.

Any inquiry regarding this decision should be directed to Eddie C. Lee at (571) 272-1732.

/Eddie C. Lee/

Eddie C. Lee
Quality Assurance Specialist
Technology Center 2100

UNITED STATES PATENT AND TRADEMARK OFFICE

Commissioner for Patents
United States Patent and Trademark Office
P.O. Box 1450
Alexandria, VA 22313-1450
www.uspto.gov

KNOBBE MARTENS OLSON & BEAR
LLP
2040 MAIN STREET
FOURTEENTH FLOOR
IRVINE CA 92614

MAILED
MAR 13 2012
OFFICE OF PETITIONS

In re Application of
KUSAKA, Hiroyuki
Application No.: 12/885,344
Filed: September 17, 2010
Attorney Docket No.:
NGTOSH.135AUS
For: ELECTRONIC APPARATUS

: DECISION ON REQUEST TO
: PARTICIPATE IN THE PATENT
: PROSECUTION HIGHWAY
: PROGRAM AND PETITION
: TO MAKE SPECIAL UNDER
: 37 CFR 1.102(a)

This is a decision on the request to participate in the Patent Prosecution Highway (PPH) program and the petition under 37 CFR 1.102(a), filed December 27, 2011, to make the above-identified application special.

The request and petition are **GRANTED**.

Discussion

A grantable request to participate in the PPH pilot program and petition to make special require:

1. The U.S. application is

    a. a Paris Convention application which either
        i. validly claims priority under 35 U.S.C. 119(a) and 37 CFR 1.55 to one or more applications filed in the JPO, or
        ii. validly claims priority to a PCT application that contains no priority claims, or
    b. a national stage application under the PCT (an application which entered the national stage in the U.S. from a PCT international application after compliance with 35 U.S.C. 371), which PCT application
        i. validly claims priority to an application filed in the JPO, or
        ii. validly claims priority to a PCT application that contains no priority claims, or
        iii. contains no priority claim, or
    c. a so-called bypass application filed under 35 U.S.C. 111(a) which validly claims benefit under 35 U.S.C. 120 to a PCT application, which PCT application
        i. validly claims priority to an application filed in the JPO, or
        ii. validly claims priority to a PCT application that contains no priority claims, or

iii. contains no priority claim;

2. Applicant must submit a copy of:
   a. The allowable/patentable claim(s) from the JPO application(s);
   b. An English translation of the allowable/patentable claim(s) and
   c. A statement that the English translation is accurate;
3. Applicant must:
   a. Ensure all the claims in the U.S. application must sufficiently correspond or be amended to sufficiently correspond to the allowable/patentable claim(s) in the JPO application(s) and
   b. Submit a claims correspondence table in English;
4. Examination of the U.S. application has not begun;
5. Applicant must submit:
   a. Documentation of prior office action:
      i. a copy of the office action(s) just prior to the "Decision to Grant a Patent" from each of the JPO application(s) containing the allowable/patentable claim(s) or
      ii. if the allowable/patentable claims(s) are from a "Notification of Reasons for Refusal" then the Notification of Reasons for Refusal or
      iii. if the JPO application is a first action allowance then no office action from the JPO is necessary should be indicated on the request/petition form;
   b. An English language translation of the JPO Office action from (5)(a)(i)-(ii) above
   c. A statement that the English translation is accurate;
6. Applicant must submit:
   a. An IDS listing the documents cited by the JPO examiner in the JPO office action (unless already submitted in this application)
   b. Copies of the documents except U.S. patents or U.S. patent application publications (unless already submitted in this application);

The request to participate in the PPH pilot program and petition comply with the above requirements. Accordingly, the above-identified application has been accorded "special" status.

Inquiries concerning this decision should be directed to JoAnne Burke at 571-272-4584.

All other inquiries concerning the examination or status of the application is accessible in the PAIR system at http://www.uspto.gov/ebc.index.html.

This application will be forwarded to the examiner for action on the merits commensurate with this decision once this application's formality reviews have been completed.

David Bucci
Petitions Examiner
Office of Petitions

UNITED STATES PATENT AND TRADEMARK OFFICE

Commissioner for Patents
United States Patent and Trademark Office
P.O. Box 1450
Alexandria, VA 22313-1450
www.uspto.gov

American Patent Agency PC
c/o Daniar Hussain
230 N Craig Street
Unit 605
Pittsburgh PA 15213

In re Application of: Califano et al.
Application No.: 12/885449
Filed: September 18, 2010
Title: SINGLE COMPONENT TWO-STAGE REGULATOR

DECISION ON PETITION TO MAKE SPECIAL FOR NEW APPLICATION UNDER 37 C.F.R. § 1.102 & M.P.E.P. § 708.02

This is a decision on the petition filed on September 18, 2010 to make the above-identified application special for accelerated examination procedure under 37 C.F.R. § 1.102(d).

The petition to make the application special is **DISMISSED**.

REGULATION AND PRACTICE

A grantable petition to make special under 37 C.F.R. § 1.102(d) and pursuant to the "Change to Practice for Petitions in Patent Applications to Make Special and for Accelerated Examination" published in the Federal Register on June 26, 2006 (71 Fed. Reg. 36323), must satisfy the following conditions:

I. Conditions Regarding the Application:

1. the application must be a non-reissue utility or design application filed under 37 CFR 1.111(a);

2. the application, the petition and the required fees must be filed electronically using the USPTO's electronic filing system (EFS), or EFS-web; if not filed electronically, a statement asserting that EFS and EFS-web were not available during the normal business hours.

3. at the time of filing, the application must be complete under 37 CFR 1.51 and in condition for examination;

4. the application must contain three or fewer independent claims and twenty or fewer total claims and the claims must be directed to a single invention.

II. Conditions Regarding the Petition:

The petition must:

1. be filed with the application;

2. include a statement that applicant agrees not to separately argue the patentability of any independent claim during any appeal in the application;

3. include a statement that applicant agrees to make an election without traverse in a telephone interview.

4. include a statement that applicant agrees to conduct such an interview when requested by the examiner.

5. include a statement, made based on a good faith belief, that a preexamination search in compliance with the following requirements, was conducted, including an identification of the field of search by United States class and subclass, where applicable, and for database searches, the search logic or chemical structure or sequence used as a query, the name of the file(s) searched and the database service, and the date of the search.

The preexamination search must:

5.1 involve U.S. patents and patent application publications, foreign patent documents, and non-patent literature, unless the applicant can justify with reasonable certainty that no references more pertinent than those already identified are likely to be found in the eliminated sources and includes such a justification with this statement;

5.2. be directed to the claimed invention and encompass all of the features of the claims, giving the claims the broadest reasonable interpretation;

5.3. encompass the disclosed features that may be claimed.

6. must provide in support of the petition an accelerated examination support document. An accelerated examination support document must include:

6.1. an information disclosure statement (IDS) in compliance with 37 CFR 1.98 citing each reference deemed most closely related to the subject matter of each of the claims;

6.2. an identification of all the limitations in the claims that are disclosed by the reference specifying where the limitation is disclosed in the cited reference;

6.3. a detailed explanation of how each of the claims are patentable over the references cited with particularity required by 37 CFR 1.111(b) and (c);

6.4. a concise statement of the utility of the invention as defined in each of the independent claims (unless the application is a design application);

6.5. a showing of where each limitation of the claims finds support under 35 U.S.C. 112, first paragraph, in the written description of the specification. If applicable, the showing must also identify; (1) each means- (or step) plus-function claim element that invokes consideration under 35 U.S.C. 112, sixth paragraph; and (2) the structure, material, or acts in the specification that corresponds to each means- (or step) plus-function claim element that invokes consideration under 35 U.S.C. 112, sixth paragraph; if the application claims the benefit of one or more applications under title 35, United States Code, the showing must also include where each limitation of the claims finds support under 35 U.S.C. 112, first paragraph, in each such application in which such supports exists;

6.6. an identification of any cited references that may be disqualified under 35 U.S.C. 103(c).

REVIEW OF FACTS

The conditions I:1-4, II: 1-5, 5.3, 6, 6.1, 6.2, 6.4, and 6.6 above are considered to have been met. However, the petition fails to comply with conditions II : 5.1, 5.2, 6.3, and 6.5 above. Therefore, the petition fails to meet the required conditions to be accorded special status under the accelerated examination procedure.

Discussion

When referring to "the petition" hereinbelow, the received papers under consideration include the PTO/SB/28 form, the "pre-examination search document" including pages 1-4; the "accelerated examination support document" comprising pages 1-16, and an Information Disclosure Statement including form PTO/SB/08A.

Regarding the requirements of section II element 5.1 and 5.2 outlined above, it appears the search outlined in the petition omitted a critical search area by not searching in class 137 subclasses 12, 14, 495, 505.12, 505.25, 505.28. Searching in class 128 subclasses 205.24, 201.27, 201.28, and 204.26 also appear on point.

Similarly, with respect to the requirements of section II element 6.3 outlined above, the petition fails to provide a detailed explanation of how each of the claims are patentable over (each of) the reference(s) with particularity required by 37 CFR 1.111(b) and (c). Petitioners should be specific in their explanation and include the identification of specific claim limitations that support their position, where appropriate. Petitioners must distinguish each claim from each piece of prior art cited. General statements that the claims are neither anticipated nor rendered obvious by the cited references or that the references are not properly combinable will not be acceptable. The Office cannot infer or guess what petitioner believes the differences between the claims and the teachings of the prior art to be. Petitioner's statements must also be consistent and must be related to the claim language. In the instant petition, claims 5, 19 and 20 have not been specifically addressed. The referral to claim 1 for claims 19 and 20 is not sufficient. The specific limitations in claims 19 and 20 must be pointed out.
A statement that the dependent claims are allowable because the independent claims are patentable is not sufficient. This does not provide guidance to the examiner as to whether the limitations could provide patentability should the examiner find the independent claims unpatentable.
Regarding the requirements of section II element 6.5 outlined above, the requirements of this section are not met. A grantable petition requires petitioner to provide a showing of where each limitation of the claims finds support under 35 U.S.C. 112, first paragraph, in the written description of the specification. If applicable, the showing must also identify: (1) each means- (or step) plus-function claim element that invokes consideration under 35 U.S.C. 112, sixth paragraph; and (2) the structure, material, or acts in the specification that corresponds to each means- (or step) plus-function claim element that invokes consideration under 35 U.S.C. 112, sixth paragraph; if the application claims the benefit of one or more applications under title 35, United States Code, the showing must also include where each limitation of the claims finds support under 35 U.S.C. 112, first paragraph, in each such application in which such supports exists. In the instant petition, the showing of support must be pointed out in the written description of the specification. For some limitations, reference is only made to figures. See for example, claim 1. In addition, the showing is not made limitation by limitation for some of the

claims. See for example claim 3. The same problems occur in the showing for the priority documents and must be corrected also.

DECISION

For the above-stated reasons, the petition is **dismissed**. The application will therefore be taken up by the examiner for action in its regular turn.

Petitioner is given a single opportunity to perfect the petition. Any request for reconsideration of this decision must be submitted within 1 (one) month or 30 (thirty) days, whichever is longer, (no extension of time under 37 CFR 1.136(a)) from the date of this decision in order to be considered timely. Any request for reconsideration must address all of the deficiencies indicated above.

Petitioner is reminded that, upon granting of the special status of the application on request for reconsideration, the application will be processed expeditiously. However, due to the dismissal of the instant petition, examination may not be completed within twelve months of the filing date of the application.

Any inquiry regarding this decision should be directed to Linda J. Sholl, TC 3700 Special Programs Examiner, at (571) 272-4391.

/Linda J. Sholl/
Linda J. Sholl
Special Programs Examiner
Technology Center 3700

UNITED STATES PATENT AND TRADEMARK OFFICE

Commissioner for Patents
United States Patent and Trademark Office
P.O. Box 1450
Alexandria, VA 22313-1450
www.uspto.gov

American Patent Agency PC
c/o Daniar Hussain
230 N Craig Street
Unit 605
Pittsburgh PA 15213

MAILED NOV 09 2010

In re Application of: Califano et al.
Application No.: 12/885449
Filed: September 18, 2010
Title: SINGLE COMPONENT TWO-STAGE REGULATOR

DECISION ON PETITION TO MAKE SPECIAL FOR NEW APPLICATION UNDER 37 C.F.R. § 1.102 & M.P.E.P. § 708.02

This is a decision on the petition filed on September 18, 2010 to make the above-identified application special for accelerated examination procedure under 37 C.F.R. § 1.102(d).

The petition to make the application special is **DISMISSED**.

REGULATION AND PRACTICE

A grantable petition to make special under 37 C.F.R. § 1.102(d) and pursuant to the "Change to Practice for Petitions in Patent Applications to Make Special and for Accelerated Examination" published in the Federal Register on June 26, 2006 (71 Fed. Reg. 36323), must satisfy the following conditions:

I. Conditions Regarding the Application:

1. the application must be a non-reissue utility or design application filed under 37 CFR 1.111(a);

2. the application, the petition and the required fees must be filed electronically using the USPTO's electronic filing system (EFS), or EFS-web; if not filed electronically, a statement asserting that EFS and EFS-web were not available during the normal business hours.

3. at the time of filing, the application must be complete under 37 CFR 1.51 and in condition for examination;

4. the application must contain three or fewer independent claims and twenty or fewer total claims and the claims must be directed to a single invention.

II. Conditions Regarding the Petition:

The petition must:

1. be filed with the application;

2. include a statement that applicant agrees not to separately argue the patentability of any independent claim during any appeal in the application;

3. include a statement that applicant agrees to make an election without traverse in a telephone interview.

4. include a statement that applicant agrees to conduct such an interview when requested by the examiner.

5. include a statement, made based on a good faith belief, that a preexamination search in compliance with the following requirements, was conducted, including an identification of the field of search by United States class and subclass, where applicable, and for database searches, the search logic or chemical structure or sequence used as a query, the name of the file(s) searched and the database service, and the date of the search.

The preexamination search must:

5.1 involve U.S. patents and patent application publications, foreign patent documents, and non-patent literature, unless the applicant can justify with reasonable certainty that no references more pertinent than those already identified are likely to be found in the eliminated sources and includes such a justification with this statement;

5.2. be directed to the claimed invention and encompass all of the features of the claims, giving the claims the broadest reasonable interpretation;

5.3. encompass the disclosed features that may be claimed.

6. must provide in support of the petition an accelerated examination support document. An accelerated examination support document must include:

6.1. an information disclosure statement (IDS) in compliance with 37 CFR 1.98 citing each reference deemed most closely related to the subject matter of each of the claims;

6.2. an identification of all the limitations in the claims that are disclosed by the reference specifying where the limitation is disclosed in the cited reference;

6.3. a detailed explanation of how each of the claims are patentable over the references cited with particularity required by 37 CFR 1.111(b) and (c);

6.4. a concise statement of the utility of the invention as defined in each of the independent claims (unless the application is a design application);

6.5. a showing of where each limitation of the claims finds support under 35 U.S.C. 112, first paragraph, in the written description of the specification. If applicable, the showing must also identify: (1) each means- (or step) plus-function claim element that invokes consideration under 35 U.S.C. 112, sixth paragraph; and (2) the structure, material, or acts in the specification that corresponds to each means- (or step) plus-function claim element that invokes consideration under 35 U.S.C. 112, sixth paragraph; if the application claims the benefit of one or more applications under title 35, United States Code, the showing must also include where each limitation of the claims finds support under 35 U.S.C. 112, first paragraph, in each such application in which such supports exists;

6.6. an identification of any cited references that may be disqualified under 35 U.S.C. 103(c).

REVIEW OF FACTS

The conditions I:1-4, II: 1-5, 5.3, 6, 6.1, 6.2, 6.4, and 6.6 above are considered to have been met. However, the petition fails to comply with conditions II : 5.1, 5.2, 6.3, and 6.5 above. Therefore, the petition fails to meet the required conditions to be accorded special status under the accelerated examination procedure.

Discussion

When referring to "the petition" hereinbelow, the received papers under consideration include the PTO/SB/28 form, the "pre-examination search document" including pages 1-4; the "accelerated examination support document" comprising pages 1-16, and an Information Disclosure Statement including form PTO/SB/08A.

Regarding the requirements of section II element 5.1 and 5.2 outlined above, it appears the search outlined in the petition omitted a critical search area by not searching in class 137 subclasses 12, 14, 495, 505.12, 505.25, 505.28. Searching in class 128 subclasses 205.24, 201.27, 201.28, and 204.26 also appear on point.

Similarly, with respect to the requirements of section II element 6.3 outlined above, the petition fails to provide a detailed explanation of how each of the claims are patentable over (each of) the reference(s) with particularity required by 37 CFR 1.111(b) and (c). Petitioners should be specific in their explanation and include the identification of specific claim limitations that support their position, where appropriate. Petitioners must distinguish each claim from each piece of prior art cited. General statements that the claims are neither anticipated nor rendered obvious by the cited references or that the references are not properly combinable will not be acceptable. The Office cannot infer or guess what petitioner believes the differences between the claims and the teachings of the prior art to be. Petitioner's statements must also be consistent and must be related to the claim language. In the instant petition, claims 5, 19 and 20 have not been specifically addressed. The referral to claim 1 for claims 19 and 20 is not sufficient. The specific limitations in claims 19 and 20 must be pointed out.
A statement that the dependent claims are allowable because the independent claims are patentable is not sufficient. This does not provide guidance to the examiner as to whether the limitations could provide patentability should the examiner find the independent claims unpatentable.
Regarding the requirements of section II element 6.5 outlined above, the requirements of this section are not met. A grantable petition requires petitioner to provide a showing of where each limitation of the claims finds support under 35 U.S.C. 112, first paragraph, in the written description of the specification. If applicable, the showing must also identify: (1) each means- (or step) plus-function claim element that invokes consideration under 35 U.S.C. 112, sixth paragraph; and (2) the structure, material, or acts in the specification that corresponds to each means- (or step) plus-function claim element that invokes consideration under 35 U.S.C. 112, sixth paragraph; if the application claims the benefit of one or more applications under title 35, United States Code, the showing must also include where each limitation of the claims finds support under 35 U.S.C. 112, first paragraph, in each such application in which such supports exists. In the instant petition, the showing of support must be pointed out in the written description of the specification. For some limitations, reference is only made to figures. See for example, claim 1. In addition, the showing is not made limitation by limitation for some of the

claims. See for example claim 3. The same problems occur in the showing for the priority documents and must be corrected also.

DECISION

For the above-stated reasons, the petition is **dismissed**. The application will therefore be taken up by the examiner for action in its regular turn.

Petitioner is given a single opportunity to perfect the petition. Any request for reconsideration of this decision must be submitted within 1 (one) month or 30 (thirty) days, whichever is longer, (no extension of time under 37 CFR 1.136(a)) from the date of this decision in order to be considered timely. Any request for reconsideration must address all of the deficiencies indicated above.

Petitioner is reminded that, upon granting of the special status of the application on request for reconsideration, the application will be processed expeditiously. However, due to the dismissal of the instant petition, examination may not be completed within twelve months of the filing date of the application.

Any inquiry regarding this decision should be directed to Linda J. Sholl, TC 3700 Special Programs Examiner, at (571) 272-4391.

/Linda J. Sholl/
Linda J. Sholl
Special Programs Examiner
Technology Center 3700

UNITED STATES PATENT AND TRADEMARK OFFICE

Commissioner for Patents
United States Patent and Trademark Office
P.O. Box 1450
Alexandria, VA 22313-1450
www.uspto.gov

American Patent Agency PC
c/o Daniar Hussain
230 N Craig Street
Unit 605
Pittsburgh PA 15213

MAILED NOV 29 2010

In re Application of: Califano et al.
Application No.: 12/885449
Filed: September 18, 2010
Title: SINGLE COMPONENT TWO-STAGE REGULATOR

DECISION ON PETITION TO MAKE SPECIAL FOR NEW APPLICATION UNDER 37 C.F.R. § 1.102 & M.P.E.P. § 708.02

This is a decision on the renewed petition filed on November 14, 2010 to make the above-identified application special for accelerated examination procedure under 37 C.F.R. § 1.102(d).

The petition to make the application special is GRANTED.

The application is eligible for accelerated examination and the petition complies with the conditions for granting the application special status pursuant to the "Change to Practice for Petitions in Patent Applications to Make Special and for Accelerated Examination" published June 26, 2006, in the Federal Register. (71 Fed. Reg. 36323).

The prosecution of the instant application will be conducted expeditiously according to the following guidelines.

1. The application will be docketed to an examiner and taken up for action within two weeks of the date of this decision.

2. Restriction Practice:
If the examiner determines that the claims are not directed to a single invention, a telephone request to elect one single invention will be made pursuant to MPEP 812.01. As a prerequisite to the grant of this petition, the applicant has agreed to make an oral election, by telephone, without traverse. If the applicant refuses to make an election without traverse, or the examiner cannot reach the applicant after a reasonable effort, the examiner will treat the first claimed invention (invention defined by claim 1) as having being constructively elected without traverse for examination.

3. Office action:
If it is determined that, after appropriate consultation, there is a potential rejection or any other issue to be addressed, the examiner will telephone the applicant and arrange an interview to discuss and resolve the issue. An Office action, other than a Notice of Allowance and Fee(s) Due (Notice of Allowance), will not be issued unless either: 1) an interview was conducted but did not result in agreed to action that places the application in condition for allowance, or, 2) a determination is made that an interview would be unlikely to result in the application being placed in condition for allowance, and 3) an internal conference has been held to review any rejection of any claim.

4. Time for Reply:
An Office action other than a Notice of Allowance or a final Office action will set a shortened statutory period of one month or thirty days, whichever is longer, for reply with no extension of time available under 37 CFR 1.136(a). Failure to timely file a reply within this non-extendible period for reply will result in the abandonment of the application.

5. Reply by Applicant:
A timely reply to an Office action other than the Notice of Allowance must be submitted electronically via EFS or EFS-web and limited to addressing the rejections, objections and requirement made. Any amendment that attempts to: 1) add claims which would result in more than three pending independent claims or more than twenty pending total claims; 2) present claims not encompassed by the pre-examination search or an updated accelerated examination support document; or 3) present claims that are directed a non-elected invention or an invention other than that previously claimed and examined in the application, will be treated as not fully responsive and will not be entered.

For any amendment to the claims (including any new claim) that is not encompassed by the accelerated examination support document, applicant must provide an updated accelerated examination support document that encompasses the amended or new claims at the time of filing of the amendment.

To proceed expeditiously with the examination, it is recommended that a reply with amendments made to any claim or with any new claim being added be accompanied by an updated accelerated examination support document or a statement explaining how the amended or new claim is supported by the original accelerated examination support document.

6. Information Disclosure Statement (IDS):
Any IDS filed during prosecution must be submitted electronically via EFS or EFS-web, accompanied by an updated accelerated examination support document, and be in compliance with 37 CFR 1.97 and 1.98.

7. Post-Allowance Processing:
   To expedite processing of the allowed application into a patent, the applicant must: 1) pay the required fees within one month of the date of the Notice of Allowance, and 2) not file any post allowance papers not required by the Office. In no event may the issue fee be paid and accepted later than three months from the date of the Notice of Allowance.

8. After-Final and Appeal Procedures:
   To expedite prosecution, after receiving the final Office action, applicant must: 1) promptly file a notice of appeal, an appeal brief and appeal fees; and 2) not request a pre-appeal brief conference.

   Any amendment, affidavit or other evidence filed after final Office action must comply with applicable rules and the requirements outlined in numbered paragraphs 5 and 6 above.

   On appeal, the application will proceed according to normal appeal procedures. After appeal, the application will again be treated special.

9. Proceedings Outside the Normal Examination Process:
   If the application becomes involved in a proceeding that is outside the normal examination process (e.g., a secrecy order, national security review, interference proceeding, petitions under 37 CFR 1.181, 182 or 183), the application will be treated special before and after such proceeding.

10. Final Disposition:
    The twelve month goal of this accelerated examination procedure ends with a final disposition. The mailing of a final Office action, a Notice of Allowance, the filing of a Notice of Appeal, or the filing of a Request for Continued Examination (RCE) is the final disposition.

If, during prosecution, a paper is not filed electronically using EFS-web, a reply is filed but is not fully responsive, the application is involved in an appeal, or a proceeding outside normal examination process, the application will still be examined expeditiously, however, the final disposition may occur more than twelve months from the filing of the application.

Any inquiry regarding this decision should be directed to Linda Sholl at (571) 272-4391

/Linda Sholl/.
Linda Sholl
Special Programs Examiner
Technology Center 3700

UNITED STATES PATENT AND TRADEMARK OFFICE

Commissioner for Patents
United States Patent and Trademark Office
P.O. Box 1450
Alexandria, VA 22313-1450
www.uspto.gov

J. V. MYERS & ASSOCIATES, P.C.
P. O. BOX 130
DRIFTWOOD TX 78619

MAILED
DEC 08 2011
OFFICE OF PETITIONS

In re Application of :
McLaughlin, et al. :
Application No. 12/885,517 : DECISION DISMISSING PETITION
Filed: September 19, 2010 : UNDER 37 CFR 1.78(a)(6)
Attorney Docket No. JDW005 :

This is a decision on the petition under 37 CFR 1.78(a)(6), filed November 22, 2011, to accept an unintentionally delayed claim under 35 U.S.C. §120 for the benefit of priority to prior-filed provisional Application No. 61/316,299, filed March 22, 2010.

The petition is **DISMISSED**.

A petition under 37 CFR 1.78(a)(6) is only applicable to those applications filed on or after November 29, 2000. Further, the petition is appropriate only after expiration of the period specified in 37 CFR 1.78(a)(5)(ii) and must be filed during the pendency of the nonprovisional application. In addition, the petition must be accompanied by:

(1) the reference required by 35 U.S.C. § 119(e) and 37 CFR 1.78(a)(5)(i) to the prior-filed application, unless previously submitted;
(2) the surcharge set forth in § 1.17(t); and
(3) a statement that the entire delay between the date the claim was due under 37 CFR 1.78(a)(5)(ii) and the date the claim was filed was unintentional. The Director may require additional information where there is a question whether the delay was unintentional.

This pending non-provisional application was filed on September 19, 2010, within twelve months of the filing date of the prior-filed provisional application, Application No. 61/316,299, which was filed on March 22, 2010, and for which priority is claimed. A reference to the prior-filed provisional application has been included the petition.

The amendment as drafted is unacceptable and, therefore, is not considered a proper reference under 37 CFR 1.78(a)(4)(i). In this regard, the amendment is physically part of the petition and, as such, does not comply with 37 CFR 1.121, 1.52, or 1.4(c). Note that 37 CFR 1.121 states that amendments are made by filing a paper, in compliance with § 1.52, directing that specified amendments be made. The pertinent section of 37 CFR 1.52 states that the claim (in this case, the claim for priority), must commence on a separate physical sheet. 37 CFR 1.4(c) states that each distinct subject must be contained in a separate paper since different matters may be considered by different branches of the United States Patent and Trademark Office.

Further, the amendment is not acceptable as drafted since it improperly incorporates by reference the prior-filed application. An incorporation by reference statement added after an application's filing date is not effective because no new matter can be added to an application after its filing date. See, 35

U.S.C. § 132(a). If an incorporation by reference statement is included in an amendment to the specification to add a benefit claim under 35 U.S.C. § 119(e) after the filing date of the application, the amendment would not be proper. When a benefit claim under 35 U.S.C. § 119(e) is submitted after the filing of an application, the reference to the prior application cannot include an incorporation by reference statement of the prior application. See, Dart Industries v. Banner, 636 F.2d 684, 207 USPQ 273 (C.A.D.C. 1980). *Note* MPEP §§ 201.06(c) and 608.04(b).

Before the petition can be granted, petitioner must submit a substitute amendment in compliance with the aforementioned rules, along with a renewed petition under 37 CFR 1.78(a)(3).[1]

As to requirement (3), the rule at 37 CFR § 1.78(a)(3) requires a statement that the entire delay between the date the claim was due under 37 CFR § 1.78(a)(2)(ii) and the date the claim was filed was unintentional. Since the statement appearing in the petition varies from the required language, the statement is being construed as the statement required by 37 CFR §1.78(a)(3). If this is not a correct reading of the statement appearing in the petition, petitioner should promptly notify the Office.

Further correspondence with respect to this matter should be addressed as follows:

By mail: Mail Stop PETITIONS
Commissioner for Patents
Post Office Box 1450
Alexandria, VA 22313-1450

By hand: Customer Service Window
Mail Stop Petitions
Randolph Building
401 Dulany Street
Alexandria, VA 22314

By fax: (571) 273-8300
ATTN: Office of Petitions

Any questions concerning this matter may be directed to the undersigned at (571) 272-3205.

/ALESIA M. BROWN/

Alesia M. Brown
Attorney Advisor
Office of Petitions

[1] The claim for priority may also be made in an Application Data Sheet in compliance with 37 CFR 1.121 and 37 CFR 1.76(b)(5).

UNITED STATES PATENT AND TRADEMARK OFFICE

Commissioner for Patents
United States Patent and Trademark Office
P.O. Box 1450
Alexandria, VA 22313-1450
www.uspto.gov

J. V. MYERS & ASSOCIATES, P.C.
P. O. BOX 130
DRIFTWOOD TX 78619

MAILED
JAN 17 2012
OFFICE OF PETITIONS

In re Application of
McLaughlin, et al.
Application No. 12/885,517
Filed: September 19, 2010
Attorney Docket No. JDW005

DECISION DISMISSING PETITION
UNDER 37 CFR 1.78(a)(6)

This is a decision on the renewed petition under 37 CFR 1.78(a)(6), filed December 23, 2011, to accept an unintentionally delayed claim under 35 U.S.C. §120 for the benefit of priority to prior-filed provisional Application No. 61/316,299, filed March 22, 2010.

The petition is **DISMISSED**.

A petition under 37 CFR 1.78(a)(6) is only applicable to those applications filed on or after November 29, 2000. Further, the petition is appropriate only after expiration of the period specified in 37 CFR 1.78(a)(5)(ii) and must be filed during the pendency of the nonprovisional application. In addition, the petition must be accompanied by:

(1) the reference required by 35 U.S.C. § 119(e) and 37 CFR 1.78(a)(5)(i) to the prior-filed application, unless previously submitted;
(2) the surcharge set forth in § 1.17(t); and
(3) a statement that the entire delay between the date the claim was due under 37 CFR 1.78(a)(5)(ii) and the date the claim was filed was unintentional. The Director may require additional information where there is a question whether the delay was unintentional.

This pending non-provisional application was filed on September 19, 2010, within twelve months of the filing date of the prior-filed provisional application, Application No. 61/316,299, which was filed on March 22, 2010, and for which priority is claimed. A reference to the prior-filed provisional application has been included the petition.

The amendment as drafted is unacceptable and, therefore, is not considered a proper reference under 37 CFR 1.78(a)(4)(i). In this regard, the amendment is physically part of the petition and, as such, does not comply with 37 CFR 1.121, 1.52, or 1.4(c). Note that 37 CFR 1.121 states that amendments are made by filing a paper, in compliance with § 1.52, directing that specified amendments be made. The pertinent section of 37 CFR 1.52 states that the claim (in this case, the claim for priority), must commence on a separate physical sheet. 37 CFR 1.4(c) states that each distinct subject must be contained in a separate paper since different matters may be considered by different branches of the United States Patent and Trademark Office.

Before the petition can be granted, petitioner must submit a substitute amendment in compliance with the aforementioned rules, along with a renewed petition under 37 CFR 1.78(a)(3).[1]

Further correspondence with respect to this matter should be addressed as follows:

By mail: Mail Stop PETITIONS
Commissioner for Patents
Post Office Box 1450
Alexandria, VA 22313-1450

By hand: Customer Service Window
Mail Stop Petitions
Randolph Building
401 Dulany Street
Alexandria, VA 22314

By fax: (571) 273-8300
ATTN: Office of Petitions

Any questions concerning this matter may be directed to the undersigned at (571) 272-3205.

/ALESIA M. BROWN/

Alesia M. Brown
Attorney Advisor
Office of Petitions

[1] The claim for priority may also be made in an Application Data Sheet in compliance with 37 CFR 1.121 and 37 CFR 1.76(b)(5).

UNITED STATES PATENT AND TRADEMARK OFFICE

Commissioner for Patents
United States Patent and Trademark Office
P.O. Box 1450
Alexandria, VA 22313-1450
www.uspto.gov

J. V. MYERS & ASSOCIATES, P.C.
P. O. BOX 130
DRIFTWOOD TX 78619

MAILED

MAR 13 2012

OFFICE OF PETITIONS

In re Application of
McLaughlin, et al.
Application No. 12/885,517
Filed: September 19, 2010
Attorney Docket No. JDW005

DECISION GRANTING PETITION
UNDER 37 CFR 1.78(a)(6)

This is a decision on the renewed petition under 37 CFR 1.78(a)(6), filed February 8, 2012, to accept an unintentionally delayed claim under 35 U.S.C. §120 for the benefit of priority to prior-filed provisional Application No. 61/316,299, filed March 22, 2010.

The petition is **GRANTED**.

A petition for acceptance of a claim for late priority under 37 CFR 1.78(a)(3) is only applicable to those applications filed on or after November 29, 2000. Further, the petition is appropriate only after the expiration of the period specified in 37 CFR 1.78(a)(2)(ii). In addition, the petition under 37 CFR 1.78(a)(3) must be accompanied by:

(1) the reference required by 35 U.S.C. § 120 and 37 CFR 1.78(a)(2)(i) of the prior-filed application, unless previously submitted;
(2) the surcharge set forth in § 1.17(t); and
(3) a statement that the entire delay between the date the claim was due under 37 CFR 1.78(a)(2)(ii) and the date the claim was filed was unintentional. The Director may require additional information where there is a question whether the delay was unintentional.

All of the above requirements having been satisfied, the late claim for priority under 35 U.S.C. § 120 is accepted as being unintentionally delayed.

The granting of the petition to accept the delayed benefit claim to the prior-filed applications under 37 CFR 1.78(a)(3) should not be construed as meaning that this application is entitled to the benefit of the prior-filed applications. In order for this application to be entitled to the benefit of the prior-filed applications, all other requirements under 35 U.S.C. § 120 and 37 CFR 1.78(a)(1) and (a)(2) must be met. Similarly, the fact that the corrected Filing Receipt accompanying this decision on petition includes the prior-filed applications should not be construed as meaning that applicant is entitled to the claim for benefit of priority to the prior-filed applications noted thereon. Accordingly, the examiner will, in due course, consider this benefit claim and determine whether the application is entitled to the benefit of the earlier filing date.

A corrected Filing Receipt, which includes the priority claim to the prior-filed nonprovisional applications, accompanies this decision on petition.

Any inquiries concerning this decision may be directed to the undersigned at (571) 272-3205. All other inquiries concerning either the examination procedures or status of the application should be directed to the Technology Center.

This application is being forwarded to Technology Center Art Unit 2614 for consideration by the examiner of applicant's entitlement to claim benefit of priority under 35 U.S.C. § 120 to the prior-filed applications.

/ALESIA M. BROWN/

Alesia M. Brown
Attorney Advisor
Office of Petitions

ATTACHMENT: Corrected Filing Receipt

UNITED STATES PATENT AND TRADEMARK OFFICE

UNITED STATES DEPARTMENT OF COMMERCE
United States Patent and Trademark Office
Address: COMMISSIONER FOR PATENTS
P.O. Box 1450
Alexandria, Virginia 22313-1450
www.uspto.gov

APPLICATION NUMBER	FILING or 371(c) DATE	GRP ART UNIT	FIL FEE REC'D	ATTY.DOCKET.NO	TOT CLAIMS	IND CLAIMS
12/885,517	09/19/2010	2611	676	JDW005	24	4

CONFIRMATION NO. 8814

CORRECTED FILING RECEIPT

44070
J. V. MYERS & ASSOCIATES, P.C.
P. O. BOX 130
DRIFTWOOD, TX 78619

OC000000053072992

Date Mailed: 03/12/2012

Receipt is acknowledged of this non-provisional patent application. The application will be taken up for examination in due course. Applicant will be notified as to the results of the examination. Any correspondence concerning the application must include the following identification information: the U.S. APPLICATION NUMBER, FILING DATE, NAME OF APPLICANT, and TITLE OF INVENTION. Fees transmitted by check or draft are subject to collection. Please verify the accuracy of the data presented on this receipt. **If an error is noted on this Filing Receipt, please submit a written request for a Filing Receipt Correction. Please provide a copy of this Filing Receipt with the changes noted thereon. If you received a "Notice to File Missing Parts" for this application, please submit any corrections to this Filing Receipt with your reply to the Notice. When the USPTO processes the reply to the Notice, the USPTO will generate another Filing Receipt incorporating the requested corrections**

Applicant(s)

Michael McLaughlin, Dublin, IRELAND;
Ciarân McElroy, Dublin, IRELAND;
Sinbad Wilmot, Dublin, IRELAND;
Brian Gaffney, Dublin, IRELAND;
Mici McCullagh, Belfast, UNITED KINGDOM;

Assignment For Published Patent Application

DECAWAVE LIMITED, Dublin, IRELAND

Power of Attorney:

Jeffrey Myers--27362
Joseph Pumo--63916
Artie Pennington--65331

Domestic Priority data as claimed by applicant

This appln claims benefit of 61/316,299 03/22/2010

Foreign Applications (You may be eligible to benefit from the **Patent Prosecution Highway** program at the USPTO. Please see http://www.uspto.gov for more information.)

Permission to Access - A proper **Authorization to Permit Access to Application by Participating Offices** (PTO/SB/39 or its equivalent) has been received by the USPTO.

If Required, Foreign Filing License Granted: 09/30/2010

The country code and number of your priority application, to be used for filing abroad under the Paris Convention, is **US 12/885,517**

Projected Publication Date: 03/22/2012

Non-Publication Request: No

Early Publication Request: No
**** SMALL ENTITY ****
Title

RECEIVER FOR USE IN AN ULTRA-WIDEBAND COMMUNICATION SYSTEM

Preliminary Class

375

PROTECTING YOUR INVENTION OUTSIDE THE UNITED STATES

Since the rights granted by a U.S. patent extend only throughout the territory of the United States and have no effect in a foreign country, an inventor who wishes patent protection in another country must apply for a patent in a specific country or in regional patent offices. Applicants may wish to consider the filing of an international application under the Patent Cooperation Treaty (PCT). An international (PCT) application generally has the same effect as a regular national patent application in each PCT-member country. The PCT process **simplifies** the filing of patent applications on the same invention in member countries, but **does not result** in a grant of "an international patent" and does not eliminate the need of applicants to file additional documents and fees in countries where patent protection is desired.

Almost every country has its own patent law, and a person desiring a patent in a particular country must make an application for patent in that country in accordance with its particular laws. Since the laws of many countries differ in various respects from the patent law of the United States, applicants are advised to seek guidance from specific foreign countries to ensure that patent rights are not lost prematurely.

Applicants also are advised that in the case of inventions made in the United States, the Director of the USPTO must issue a license before applicants can apply for a patent in a foreign country. The filing of a U.S. patent application serves as a request for a foreign filing license. The application's filing receipt contains further information and guidance as to the status of applicant's license for foreign filing.

Applicants may wish to consult the USPTO booklet, "General Information Concerning Patents" (specifically, the section entitled "Treaties and Foreign Patents") for more information on timeframes and deadlines for filing foreign patent applications. The guide is available either by contacting the USPTO Contact Center at 800-786-9199, or it can be viewed on the USPTO website at http://www.uspto.gov/web/offices/pac/doc/general/index.html.

For information on preventing theft of your intellectual property (patents, trademarks and copyrights), you may wish to consult the U.S. Government website, http://www.stopfakes.gov. Part of a Department of Commerce initiative, this website includes self-help "toolkits" giving innovators guidance on how to protect intellectual property in specific countries such as China, Korea and Mexico. For questions regarding patent enforcement issues, applicants may call the U.S. Government hotline at 1-866-999-HALT (1-866-999-4158).

LICENSE FOR FOREIGN FILING UNDER

Title 35, United States Code, Section 184

Title 37, Code of Federal Regulations, 5.11 & 5.15

GRANTED

The applicant has been granted a license under 35 U.S.C. 184, if the phrase "IF REQUIRED, FOREIGN FILING LICENSE GRANTED" followed by a date appears on this form. Such licenses are issued in all applications where the conditions for issuance of a license have been met, regardless of whether or not a license may be required as set forth in 37 CFR 5.15. The scope and limitations of this license are set forth in 37 CFR 5.15(a) unless an earlier license has been issued under 37 CFR 5.15(b). The license is subject to revocation upon written notification. The date indicated is the effective date of the license, unless an earlier license of similar scope has been granted under 37 CFR 5.13 or 5.14.

This license is to be retained by the licensee and may be used at any time on or after the effective date thereof unless it is revoked. This license is automatically transferred to any related applications(s) filed under 37 CFR 1.53(d). This license is not retroactive.

The grant of a license does not in any way lessen the responsibility of a licensee for the security of the subject matter as imposed by any Government contract or the provisions of existing laws relating to espionage and the national security or the export of technical data. Licensees should apprise themselves of current regulations especially with respect to certain countries, of other agencies, particularly the Office of Defense Trade Controls, Department of State (with respect to Arms, Munitions and Implements of War (22 CFR 121-128)); the Bureau of Industry and Security, Department of Commerce (15 CFR parts 730-774); the Office of Foreign AssetsControl, Department of Treasury (31 CFR Parts 500+) and the Department of Energy.

NOT GRANTED

No license under 35 U.S.C. 184 has been granted at this time, if the phrase "IF REQUIRED, FOREIGN FILING LICENSE GRANTED" DOES NOT appear on this form. Applicant may still petition for a license under 37 CFR 5.12, if a license is desired before the expiration of 6 months from the filing date of the application. If 6 months has lapsed from the filing date of this application and the licensee has not received any indication of a secrecy order under 35 U.S.C. 181, the licensee may foreign file the application pursuant to 37 CFR 5.15(b).

SelectUSA

The United States represents the largest, most dynamic marketplace in the world and is an unparalleled location for business investment, innovation and commercialization of new technologies. The USA offers tremendous resources and advantages for those who invest and manufacture goods here. Through SelectUSA, our nation works to encourage, facilitate, and accelerate business investment. To learn more about why the USA is the best country in the world to develop technology, manufacture products, and grow your business, visit SelectUSA.gov.

UNITED STATES PATENT AND TRADEMARK OFFICE

Commissioner for Patents
United States Patent and Trademark Office
P.O. Box 1450
Alexandria, VA 22313-1450
www.uspto.gov

Clause Eight Intell. Prop. Service
P.O Box 131270
Carlsbad CA 92013

MAIL

OCT 27 2010

DIRECTOR'S OFFICE
TECHNOLOGY CENTER 2600

In re Application of:
PERKINS, MATTHEW R., et al.
Serial No.: 12/885,527
Filed: September 19, 2010

Title: **WIRELESS TRACKING SYSTEM AND METHOD UTILIZING NEAR-FIELD COMMUNICATION DEVICES**

DECISION ON PETITION TO MAKE SPECIAL FOR NEW APPLICATION UNDER 37 C.F.R. § 1.102 & M.P.E.P. § 708.02

The petition to make the application special filed September 19, 2010 is **GRANTED**.

The application is eligible for accelerated examination and the petition complies with the conditions for granting the application special status pursuant to the "Change to Practice for Petitions in Patent Applications to Make Special and for Accelerated Examination" published June 26, 2006, in the Federal Register. (71 Fed. Reg. 36323).

The prosecution of the instant application will be conducted expeditiously according to the following guidelines.

1. The application will be docketed to an examiner and taken up for action within two weeks of the date of this decision.

2. Restriction Practice:
   If the examiner determines that the claims are not directed to a single invention, a telephone request to elect one single invention will be made pursuant to MPEP 812.01. As a prerequisite to the grant of this petition, the applicant has agreed to make an oral election, by telephone, without traverse. If the applicant refuses to make an election without traverse, or the examiner cannot reach the applicant after a reasonable effort, the examiner will treat the first claimed invention (invention defined by claim 1) as having being constructively elected without traverse for examination.

3. Office action:

If it is determined that, after appropriate consultation, there is a potential rejection or any other issue to be addressed, the examiner will telephone the applicant and arrange an interview to discuss and resolve the issue. An Office action, other than a Notice of Allowance and Fee(s) Due (Notice of Allowance), will not be issued unless either: 1) an interview was conducted but did not result in agreed to action that places the application in condition for allowance, or, 2) a determination is made that an interview would be unlikely to result in the application being placed in condition for allowance, and 3) an internal conference has been held to review any rejection of any claim.

4. Time for Reply:
An Office action other than a Notice of Allowance or a final Office action will set a shortened statutory period of one month or thirty days, whichever is longer, for reply with no extension of time available under 37 CFR 1.136(a). Failure to timely file a reply within this non-extendible period for reply will result in the abandonment of the application.

5. Reply by Applicant:
A timely reply to an Office action other than the Notice of Allowance must be submitted electronically via EFS or EFS-web and limited to addressing the rejections, objections and requirement made. Any amendment that attempts to: 1) add claims which would result in more than three pending independent claims or more than twenty pending total claims; 2) present claims not encompassed by the pre-examination search or an updated accelerated examination support document; or 3) present claims that are directed a non-elected invention or an invention other than that previously claimed and examined in the application, will be treated as not fully responsive and will not be entered.

   For any amendment to the claims (including any new claim) that is not encompassed by the accelerated examination support document, applicant must provide an updated accelerated examination support document that encompasses the amended or new claims at the time of filing of the amendment.

   To proceed expeditiously with the examination, it is recommended that a reply with amendments made to any claim or with any new claim being added be accompanied by an updated accelerated examination support document or a statement explaining how the amended or new claim is supported by the original accelerated examination support document.

6. Information Disclosure Statement (IDS):
Any IDS filed during prosecution must be submitted electronically via EFS or EFS-web, accompanied by an updated accelerated examination support document, and be in compliance with 37 CFR 1.97 and 1.98.

7. Post-Allowance Processing:
To expedite processing of the allowed application into a patent, the applicant must: 1) pay the required fees within one month of the date of the Notice of Allowance, and 2) not

file any post allowance papers not required by the Office. In no event may the issue fee be paid and accepted later than three months from the date of the Notice of Allowance.

8. After-Final and Appeal Procedures:
   To expedite prosecution, after receiving the final Office action, applicant must: 1) promptly file a notice of appeal, an appeal brief and appeal fees; and 2) not request a pre-appeal brief conference.

   Any amendment, affidavit or other evidence filed after final Office action must comply with applicable rules and the requirements outlined in numbered paragraphs 5 and 6 above.

   On appeal, the application will proceed according to normal appeal procedures. After appeal, the application will again be treated special.

9. Proceedings Outside the Normal Examination Process:
   If the application becomes involved in a proceeding that is outside the normal examination process (e.g., a secrecy order, national security review, interference proceeding, petitions under 37 CFR 1.181, 182 or 183), the application will be treated special before and after such proceeding.

10. Final Disposition:
    The twelve month goal of this accelerated examination procedure ends with a final disposition. The mailing of a final Office action, a Notice of Allowance, the filing of a Notice of Appeal, or the filing of a Request for Continued Examination (RCE) is the final disposition.

If, during prosecution, a paper is not filed electronically using EFS-web, a reply is filed but is not fully responsive, the application is involved in an appeal, or a proceeding outside normal examination process, the application will still be examined expeditiously, however, the final disposition may occur more than twelve months from the filing of the application.

Any inquiry regarding this decision should be directed to Ken Wieder, Quality Assurance Specialist, at (571) 272-2986.

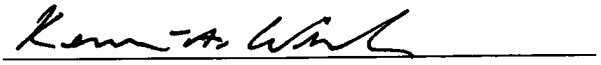

Kenneth A. Wieder
Quality Assurance Specialist
Technology Center 2600
Communications

UNITED STATES PATENT AND TRADEMARK OFFICE

Commissioner for Patents
United States Patent and Trademark Office
P.O. Box 1450
Alexandria, VA 22313-1450
www.uspto.gov

Paper No.

JONES DAY
222 EAST 41ST ST
NEW YORK NY 10017

MAILED
AUG 26 2011
OFFICE OF PETITIONS

In re Application of :
Milshtein et al. : DECISION ON PETITION
Application No. 12/885,532 :
Filed: September 19, 2010 :
Atty Docket No. 11653-073-999 :
(596353-999 :

This is a decision on the PETITION FOR REVIVAL OF AN APPLICATION FOR PATENT ABANDONED UNINTENTIONALLY UNDER 37 CFR 1.137(b) filed August 17, 2011.

The petition is **GRANTED**.

The above-identified application became abandoned for failure to file a proper reply to the Notice to File Corrected Application Papers mailed October 5, 2010. The Notice set a time limit for reply of two (2) months from the mail date of the Notice. This period was extendable under 37 CFR 1.136(a). A reply, made timely by an accompanying petition for response within the fourth month, was filed on April 2, 2011. However, by Notice mailed April 8, 2011, applicant was advised that the reply was incomplete. A further reply was filed on May 27, 2011; however, this was outside of the maximum period for reply. No further reply timely filed and no further extension obtained, the above-identified application became abandoned on April 6, 2011. A courtesy Notice of Abandonment was mailed on June 17, 2011.

Petitioner has satisfied the requirements of 37 CFR 1.137(b). The required reply in the form of replacement drawings was filed on May 27, 2011. The petition includes the petition fee and the required statement of unintentional delay. No terminal disclaimer is required.

The Office of Patent Application Processing has been advised of this decision. The application is thereby forwarded for processing of the response to the Notice to File Corrected Application Papers.

Telephone inquiries specific to this decision should be directed to the undersigned at (571) 272-3219.

Nancy Johnson
Senior Petitions Attorney
Office of Petitions

UNITED STATES PATENT AND TRADEMARK OFFICE

UNITED STATES DEPARTMENT OF COMMERCE
United States Patent and Trademark Office
Address: COMMISSIONER FOR PATENTS
P.O. Box 1450
Alexandria, Virginia 22313-1450
www.uspto.gov

APPLICATION NO.	FILING DATE	FIRST NAMED INVENTOR	ATTORNEY DOCKET NO.	CONFIRMATION NO.
12/885,604	09/20/2010	Stephen L. Spruell	60309.0009USC1/SW-07-0562	9006

70289 7590 10/25/2011

MERCHANT & GOULD KS
P.O. BOX 2903
MINNEAPOLIS, MN 55402

EXAMINER	
THOMPSON, TIMOTHY J	

ART UNIT	PAPER NUMBER
2835	

MAIL DATE	DELIVERY MODE
10/25/2011	PAPER

Please find below and/or attached an Office communication concerning this application or proceeding.

The time period for reply, if any, is set in the attached communication.

UNITED STATES PATENT AND TRADEMARK OFFICE

Commissioner for Patents
United States Patent and Trademark Office
P.O. Box 1450
Alexandria, VA 22313-1450
www.uspto.gov

MERCHANT & GOULD KS
P.O. BOX 2903
MINNEAPOLIS MN 55402

Applicant: Spruell
Appl. No.: 12/885,604
Filing Date: September 20, 2010
Title: VIBRATION RESISTANT CABLE
Attorney Docket No.: 60309.0009USC1/SW-07-0562
Pub. No.: US 2011/0114367 A1
Pub. Date: May 19, 2011

This is a decision on the request for republication of patent application publication under 37 CFR 1.221(a), filed on September 23, 2011, for the above-identified application.

The request under 37 CFR 1.221(a) is DISMISSED.

37 CFR 1.221(a) requires "a copy of the application in compliance with the Office electronic filing system requirements and be accompanied by the publication fee set forth in § 1.18(d) and the processing fee set forth in § 1.17(i)". If the request for republication does not comply with the electronic filing system requirements, the republication will not take place and the publication fee set forth in § 1.18(d) will be refunded. The processing fee will be retained.

The applicant did not supply a copy of the application in compliance with the Office electronic filing system, as required by 37 CFR 1.221(a) because **the applicant submitted the papers as a "Document for an existing application", which are entered into the application file, and not as a "Pre-Grant Publication" submission**. The request for republication does not comply with the electronic filing system requirements, thus republication will not take place.

Any request for republication under 37 CFR 1.221(a), must be submitted via the EFS system, as a Pre-Grant publication submission and must include a copy of the application in compliance with the Office electronic filing system requirements. The applicant is directed to the following website for additional instructions on how to submit a Pre-Grant Publication submission via the electronic filing system:

http://www.uspto.gov/ebc/portal/efs/pgpub_quickstart.pdf

Any questions or requests for reconsideration of the decision should be addressed as follows:

By mail to: Mail Stop PGPUB
Commissioner for Patents
P.O. Box 1450
Alexandria, Va. 22313-1450

By facsimile: 571-273-8300

Telephone inquiries regarding this correspondence should be directed to The Office of Data Management at 571-272-4200.

Tammy J. Koontz
Office of Data Management
United States Patent & Trademark Office

Adjustment date: 10/25/2011 KKING1
09/23/2011 INTEFSW 00021183 12885604
01 FC:1504 -300.00 OP

Refund Ref:
10/25/2011 0030103700

Credit Card Refund Total: $300.00

VISA....: XXXXXXXXXXXX0290

UNITED STATES PATENT AND TRADEMARK OFFICE

UNITED STATES DEPARTMENT OF COMMERCE
United States Patent and Trademark Office
Address: COMMISSIONER FOR PATENTS
P.O. Box 1450
Alexandria, Virginia 22313-1450
www.uspto.gov

APPLICATION NO.	FILING DATE	FIRST NAMED INVENTOR	ATTORNEY DOCKET NO.	CONFIRMATION NO.
12/885,644		Eric D. Blom	1069-213782	9088

23643 7590 10/04/2010
BARNES & THORNBURG LLP
11 SOUTH MERIDIAN
INDIANAPOLIS, IN 46204

EXAMINER	
ART UNIT	PAPER NUMBER
3771	

NOTIFICATION DATE	DELIVERY MODE
10/04/2010	ELECTRONIC

Please find below and/or attached an Office communication concerning this application or proceeding.

The time period for reply, if any, is set in the attached communication.

Notice of the Office communication was sent electronically on above-indicated "Notification Date" to the following e-mail address(es):

indocket@btlaw.com

UNITED STATES PATENT AND TRADEMARK OFFICE

Commissioner for Patents
United States Patent and Trademark Office
P.O. Box 1450
Alexandria, VA 22313-1450
www.uspto.gov

BARNES & THORNBURG LLP
11 SOUTH MERIDIAN
INDIANAPOLIS IN 46204

In re Application of	:	
BLOM, ERIC D. et al	:	DECISION ON REQUEST TO
Application No. 12/885,644	:	PARTICIPATE IN PATENT
Filed: Sep. 20, 2010	:	PROSECUTION HIGHWAY
Attorney Docket No. 1069-213782	:	PROGRAM AND PETITION
For VALVED FENESTRATED TRACHEOTOMY TUBE HAVING OUTER AND INNER CANNULAE	:	37 CFR 1.102(d)

This is a decision on the renewed request to participate in the Patent Prosecution Highway (PPH) program and the renewed petition under 37 CFR 1.102(d), filed Sep. 20, 2010 to make the above-identified application special.

The request and petition are dismissed.

A grantable request to participate in the PPH pilot program and petition to make special require:

(1) The U.S. application must validly claim priority under 35 U.S.C. 119(a) to one or more applications filed in the EPO;
(2) Applicant must submit a copy of the allowable/patentable claim(s) from the EPO application(s) along with an English translation thereof and a statement that the English translation is accurate;
(3) All the claims in the U.S. application must sufficiently correspond or be amended to sufficiently correspond to the allowable/patentable claim(s) in the EPO application(s);
(4) Examination of the U.S. application has not begun;
(5) Applicant must submit a copy of all the office actions from each of the EPO application(s) containing the allowable/patentable claim(s) along with an English translation thereof and a statement that the English translation is accurate;
(6) Applicant must submit an IDS listing the documents cited by the EPO examiner in the EPO office action along with copies of documents except U.S. patents or U.S. patent application publications.

The request to participate in the PPH program and petition met all conditions except Item #6 above.

With regard to Item #6, the request to participate in the PPH pilot program and petition fail to include a copy of DE 101 09 935 Nov. 29, 2001. The patent document was cited in the International Search Report and a copy is required.

Applicant is encouraged to cite and submit all relevant prior art references, if any, to facilitate examination in this application.

Applicant is given a time period of **ONE MONTH or THIRTY DAYS**, whichever is longer, from the mailing date of this decision to correct the deficiencies. **NO EXTENSION OF TIME UNDER 37 CFR 1.136 IS PERMITTED.** If the deficiencies are not corrected with the time period given, the application will await action in its regular turn.

Currently, this application is still undergoing pre-examination processing. Response must be filed via EFS-Web. Telephone inquiries concerning this decision should be directed to Henry C. Yuen, at 571-272-4856.

/Henry C. Yuen/

Henry C. Yuen
Special Programs Examiner
Technology Center 3700
Tel: 571-272-4856

UNITED STATES PATENT AND TRADEMARK OFFICE

UNITED STATES DEPARTMENT OF COMMERCE
United States Patent and Trademark Office
Address: COMMISSIONER FOR PATENTS
P.O. Box 1450
Alexandria, Virginia 22313-1450
www.uspto.gov

APPLICATION NO.	FILING DATE	FIRST NAMED INVENTOR	ATTORNEY DOCKET NO.	CONFIRMATION NO.
12/885,644	09/20/2010	Eric D. Blom	1069-213782	9088

23643 7590 10/15/2010
BARNES & THORNBURG LLP
11 SOUTH MERIDIAN
INDIANAPOLIS, IN 46204

EXAMINER	
ART UNIT	PAPER NUMBER
3771	

NOTIFICATION DATE	DELIVERY MODE
10/15/2010	ELECTRONIC

Please find below and/or attached an Office communication concerning this application or proceeding.

The time period for reply, if any, is set in the attached communication.

Notice of the Office communication was sent electronically on above-indicated "Notification Date" to the following e-mail address(es):

indocket@btlaw.com

UNITED STATES PATENT AND TRADEMARK OFFICE

Commissioner for Patents
United States Patent and Trademark Office
P.O. Box 1450
Alexandria, VA 22313-1450
www.uspto.gov

BARNES & THORNBURG LLP
11 SOUTH MERIDIAN
INDIANAPOLIS IN 46204

In re Application of	:	
BLOM, ERIC D. et al	:	DECISION ON REQUEST TO
Application No. 12/885,644	:	PARTICIPATE IN PATENT
Filed: Sep. 20, 2010	:	PROSECUTION HIGHWAY
Attorney Docket No. 1069-213782	:	PROGRAM AND PETITION
For VALVED FENESTRATED TRACHEOTOMY TUBE HAVING OUTER AND INNER CANNULAE	:	37 CFR 1.102(d)

This is a decision on the renewed request to participate in the Patent Prosecution Highway (PPH) program and the renewed petition under 37 CFR 1.102(d), filed October 13, 2010 to make the above-identified application special.

The request and petition are granted.

A grantable request to participate in the PPH pilot program and petition to make special require:

(1) The U.S. application must validly claim priority under 35 U.S.C. 119(a) to one or more applications filed in the EPO;
(2) Applicant must submit a copy of the allowable/patentable claim(s) from the EPO application(s) along with an English translation thereof and a statement that the English translation is accurate;
(3) All the claims in the U.S. application must sufficiently correspond or be amended to sufficiently correspond to the allowable/patentable claim(s) in the EPO application(s);
(4) Examination of the U.S. application has not begun;
(5) Applicant must submit a copy of all the office actions from each of the EPO application(s) containing the allowable/patentable claim(s) along with an English translation thereof and a statement that the English translation is accurate;
(6) Applicant must submit an IDS listing the documents cited by the EPO examiner in the EPO office action along with copies of documents except U.S. patents or U.S. patent application publications.

In light of the petition being properly submitted, the request to participate in the PPH program and the petition comply with the above requirements. Accordingly, the above-identified application has been accorded "special" status.

The applicant is encouraged to cite and submit all relevant prior art references, if any, to facilitate examination in this application.

All other inquiries concerning the examination or status of the application should be directed to Justine Yu, the SPE of Art Unit 3771, and (571)272-4835 for Class 128/207 and also accessible in the PAIR system at http://www.uspto.gov/ebc.index.html.

All other inquiries concerning the examination or status of the application should be directed to the Patent Application Information Retrieval (PAIR) system.

This application will be forwarded and docketed to an examiner for action on the merits commensurate with this decision.

Telephone inquiries concerning this decision should be directed to Henry C. Yuen, at 571-272-4856.

The petition is **granted.**

/Henry C. Yuen/

_____

Henry C. Yuen, Special Programs Examiner
Technology Center 3700 – Mechanical Engineering,
Manufacturing and Products
571-272-4856

UNITED STATES PATENT AND TRADEMARK OFFICE

Commissioner for Patents
United States Patent and Trademark Office
P.O. Box 1450
Alexandria, VA 22313-1450
www.uspto.gov

SPRINKLE IP LAW GROUP / ZIMMER
1301 W. 25TH STREET
SUITE 408
AUSTIN, TX 78705

MAILED

APR 03 2012

OFFICE OF PETITIONS

In re Application of
Charles R. Forton, et al.
Application No. 12/885,673
Filed: September 20, 2010
Attorney Docket No. ZIMM1800

DECISION ON PETITION
TO WITHDRAW
FROM RECORD

This is a decision on the Request to Withdraw as attorney or agent of record under 37 C.F.R. § 1.36(b), filed February 25, 2012.

The request is **DISMISSED** as moot.

A review of the file record indicates that the power of attorney to Sprinkle IP Law Group / Zimmer has been revoked by the assignee of the patent application on February 21, 2012. Accordingly, the request to withdraw under 37 C.F.R. § 1.36(b) is moot.

All future communications from the Office will continue to be directed to the below-listed address until otherwise notified by applicant.

Telephone inquires concerning this decision should be directed to undersigned at 571-272-1642.

/AMW/
April M. Wise
Petitions Examiner
Office of Petitions

UNITED STATES PATENT AND TRADEMARK OFFICE

UNITED STATES DEPARTMENT OF COMMERCE
United States Patent and Trademark Office
Address: COMMISSIONER FOR PATENTS
P.O. Box 1450
Alexandria, Virginia 22313-1450
www.uspto.gov

APPLICATION NO.	FILING DATE	FIRST NAMED INVENTOR	ATTORNEY DOCKET NO.	CONFIRMATION NO.
12/885,699	09/20/2010	Russel M. Walters	J&J5302USDIV1	9180

27777 7590 04/26/2011

PHILIP S. JOHNSON
JOHNSON & JOHNSON
ONE JOHNSON & JOHNSON PLAZA
NEW BRUNSWICK, NJ 08933-7003

EXAMINER	
MRUK, BRIAN P	
ART UNIT	**PAPER NUMBER**
1761	

NOTIFICATION DATE	DELIVERY MODE
04/26/2011	ELECTRONIC

Please find below and/or attached an Office communication concerning this application or proceeding.

The time period for reply, if any, is set in the attached communication.

Notice of the Office communication was sent electronically on above-indicated "Notification Date" to the following e-mail address(es):

jnjuspatent@corus.jnj.com
lhowd@its.jnj.com
gsanche@its.jnj.com

UNITED STATES PATENT AND TRADEMARK OFFICE

Commissioner for Patents
United States Patent and Trademark Office
P.O. Box 1450
Alexandria, VA 22313-1450
www.uspto.gov

wk

Mailed: 4/26/11

In re application of :
Waters : DECISION ON
Serial No. 12/885,699 : PETITION
Filed: 09/20/2010 :
For: METHODS OF CLEANSING DYED HAIR

This is a decision on a PETITION filed March 4, 2011, which has been accepted as a timely petition under 1.59(b) and MPEP 724.02 and is before the Group Director of Technology Center 1700 for consideration.

DECISION

Petitioner requests that the documents filed March 3, 2011 be expunged. The documents were intended for a different application.

The petition is **GRANTED.**

Section 1.59 has been amended to eliminate references to returning documents that have been expunged to recognize that, with electronic Official files, there will be nothing to return when a paper is expunged.

The Office is capturing electronic images of all documents that form the Official file. Where the image is generated from a physical source document, the originating document may be disposed of once the electronic image accuracy is verified. The paper source document will eventually be destroyed under a United States National Archives and Records Administration (NARA) approved schedule. Therefore, if a document is to be expunged from the record, the only operation that will be required will be removal of the image from the Official file.

Paragraph (a)(1) of §1.59 has been amended by deleting the phrase "and returned" from the first sentence, and deleting the second sentence. Paragraph (b) of §1.59 has been amended by deleting the phrase "and return" from each of the first and second sentences. The Office will continue to provide notice in the Official file that a paper has been expunged and the Office will send a decision to the applicant notifying the applicant that the paper has been expunged.

12/885,699

The images will be removed from the Official file.

___/Yvonne Eyler/
Director, Technology Center 1700_____

Yvonne L. Eyler, Director
Technology Center 1700
Chemical and Materials Engineering

PHILIP S. JOHNSON
JOHNSON & JOHNSON
ONE JOHNSON & JOHNSON PLAZA
NEW BRUNSWICK NJ 08933-7003

UNITED STATES PATENT AND TRADEMARK OFFICE

Commissioner for Patents
United States Patent and Trademark Office
P.O. Box 1450
Alexandria, VA 22313-1450
www.uspto.gov

In re Application of
EDWARD ANTHONY LAABS

Application No. 12885702

Filed:

Attorney Docket No. PER.00001

:
:
:DECISION ON PETITION TO MAKE SPECIAL
:UNDER 37 CFR 1.102(c)(1)
:

This is a decision on the electronic petition under 37 CFR 1.102 (c)(1), filed 20-SEP-2010 to make the above-identified application special based on applicant's age as set forth in MPEP § 708.02, Section IV.

The petition is **GRANTED**.

A grantable petition to make an application special under 37 CFR 1.102(c)(1), MPEP § 708.02, Section IV: Applicant's Age must include a statement by applicant or a registered practitioner having evidence that applicant is at least 65 years of age. No fee is required.

Accordingly, the above-identified application has been accorded "special" status and will be taken up for action by the examiner upon the completion of all pre-examination processing.

Telephone inquiries concerning this electronic decision should be directed to the Electronic Business Center at 866-217-9197.

All other inquiries concerning either the examination or status of the application should be directed to the Technology Center.

UNITED STATES PATENT AND TRADEMARK OFFICE

COMMISSIONER FOR PATENTS
UNITED STATES PATENT AND TRADEMARK OFFICE
P.O. BOX 1450
ALEXANDRIA, VA 22313-1450
WWW.USPTO.GOV

Paper No.

BAKER BOTTS L.L.P.
30 ROCKEFELLER PLAZA
44TH FLOOR
NEW YORK NY 10112-4498

MAILED

JUN 17 2011

OFFICE OF PETITIONS

In re Application of :
Anderson, Boulager, Cook, and :
Johnson :
Application No. 12/885,800 : DECISION ON PETITION
Filed: September 20, 2010 : PURSUANT TO
Attorney Docket No.: : 37 C.F.R. § 1.47(A)
070050.4057 :
Title: METHODS AND SYSTEMS OF :
DETERMINING THE EFFECTIVENESS :
OF CAPITAL IMPROVEMENT PROJECTS :

This is in response to the petition pursuant to 37 C.F.R. § 1.47(a), filed on May 3, 2011.

This petition is **DISMISSED.**

On September 20, 2010, this application was filed, identifying Anderson, Boulager, Cook, and Johnson as joint inventors. No oath or declaration was included on filing. On October 7, 2010, a "Notice to File Missing Parts of Nonprovisional Application - Filing Date Granted" (notice) was mailed, requiring a fully executed oath or declaration and the fee associated with the late submission of the same. The notice set a two-month period for response.

On May 3, 2011, Petitioner submitted this petition in response to the notice, along with, *inter alia*, the fee that is associated with the late submission of an oath or declaration, a declaration that has been executed by each joint inventor save Ms. Cook, the petition fee, the last-known address of the non-signing inventor,[1] and a five-month extension of time so as to make timely this response.

A grantable petition pursuant to 37 C.F.R. § 1.47(a) requires:

1 Petition, page 2.

(1) the petition fee of $200;
(2) a surcharge of either $65 or $130 if the petition is not filed at the time of filing the application, as set forth in 37 C.F.R. § 1.16(f);
(3) a statement of the last known address of the non-signing inventor;
(4) either
    a) proof that a copy of the entire application (specification, claims, drawings, and the oath or declaration) was sent or given to the non-signing inventor for review and proof that the non-signing inventor refuses to join in the application or
    b) proof that the non-signing inventor cannot be found or reached after diligent effort, and;
(5) a declaration which complies with 37 C.F.R. § 1.63.

Petitioner has met requirements (1) - (3) of 37 C.F.R. § 1.47(a). Requirements (4) and (5) have not been satisfied, as will now be pointed out.

Regarding the fourth requirement above, Petitioner has asserted that the non-signing inventor is "on an extended leave of absence from her current place of employment and will be checking e-mails 'almost never," and that she is "currently out of the country."[2] However, pursuant to M.P.E.P. § 409.03(d)(I), the "fact that a nonsigning inventor is on vacation or out of town and is therefore temporarily unavailable to sign the declaration is not (emphasis included) an acceptable reason for filing under 37 CFR 1.47."

Regarding the fifth requirement above, the declaration gives the address of the non-signing joint inventor as one that is different from that which was given in the second page of the statement of facts. Assuming that the statement of facts is to be believed, Petitioner will need to submit a declaration which contains the correct address for the non-signing joint inventor.

Any response to this decision must be submitted within **TWO MONTHS** from the mail date of this decision. Extensions of time under 37 C.F.R. § 1.136(a) are permitted. The reply should include a cover letter entitled "Renewed Petition pursuant to 37 C.F.R. § 1.47(a)". This is not a final agency action within the meaning of 5 U.S.C § 704.

---

2 Id. at 1.

Any response to this decision should indicate in a prominent manner that the attorney handling this matter is Paul Shanoski, and may be submitted by mail,[3] hand-delivery,[4] or facsimile.[5] Registered users of EFS-Web may alternatively submit a response to this decision via EFS-Web.[6]

If responding by mail, Petitioner is advised not to place the undersigned's name on the envelope. Only the information that appears in the footnote should be included - adding anything else to the address will delay the delivery of the response to the undersigned.

Telephone inquiries regarding this decision should be directed to the undersigned at (571) 272-3225.[7]

/Paul Shanoski/
Paul Shanoski
Senior Attorney
Office of Petitions

---

3 Mail Stop Petition, Commissioner for Patents, United States Patent and Trademark Office, P.O. Box 1450, Alexandria, VA, 22313-1450.
4 Customer Window, Randolph Building, 401 Dulaney Street, Alexandria, VA, 22314.
5 (571) 273-8300- please note this is a central facsimile number.
6 https://sportal.uspto.gov/authenticate/authenticateuserlocalepf.html
7 Petitioner will note that all practice before the Office should be in writing, and the action of the Office will be based exclusively on the written record in the Office. See 37 C.F.R. § 1.2. As such, Petitioner is reminded that no telephone discussion may be controlling or considered authority for any of Petitioner's further action(s).

UNITED STATES PATENT AND TRADEMARK OFFICE

COMMISSIONER FOR PATENTS
UNITED STATES PATENT AND TRADEMARK OFFICE
P.O. BOX 1450
ALEXANDRIA, VA 22313-1450
WWW.USPTO.GOV

Paper No.

BAKER BOTTS L.L.P.
30 ROCKEFELLER PLAZA
44TH FLOOR
NEW YORK NY 10112-4498

MAILED

AUG 30 2011

OFFICE OF PETITIONS

In re Application of	:	
Anderson, Boulager, Cook, and Johnson	:	
Application No. 12/885,800	:	DECISION NOTING JOINDER AND
Filed: September 20, 2010	:	DISMISSING RENEWED PETITION
Attorney Docket No.: 070050.4057	:	PURSUANT TO 37 C.F.R. § 1.47(A) AS MOOT AND
Title: METHODS AND SYSTEMS OF DETERMINING THE EFFECTIVENESS OF CAPITAL IMPROVEMENT PROJECTS	:	PETITION PURSUANT TO 37 C.F.R. § 1.182 AS UNNECESSARY

This is in response to the renewed petition pursuant to 37 C.F.R. § 1.47(a), filed on August 17, 2011 and the concurrently submitted petition pursuant to 37 C.F.R. § 1.182.

On September 20, 2010, this application was filed, identifying Anderson, Boulager, Cook, and Johnson as joint inventors. No oath or declaration was included on filing. On October 7, 2010, a "Notice to File Missing Parts of Nonprovisional Application - Filing Date Granted" (notice) was mailed, requiring a fully executed oath or declaration and the fee associated with the late submission of the same. The notice set a two-month period for response.

On May 3, 2011, Petitioner submitted an original petition pursuant to 37 C.F.R. § 1.47(a) in response to the notice, along with, *inter alia*, the fee that is associated with the late submission of an oath or declaration, a declaration that has been executed by each joint inventor save Ms. Cook, the petition fee, the last-known address of the non-signing inventor,[1] and a five-month extension of time so as to make timely the response. The original petition pursuant to 37 C.F.R. § 1.47(a) was dismissed via the mailing of a decision on June 17, 2011.

With this renewed petition, Petitioner has submitted a declaration that has been properly executed by formerly non-

1 Original petition, page 2.

signing joint inventor Cook.

As such, this renewed petition is **DISMISSED AS MOOT.**

In view of the joinder of the joint inventor, further consideration under 37 C.F.R. § 1.47(a) is not necessary and the petition is considered moot. This application does not have any Rule 1.47(a) status and no such status should appear on the file wrapper. **This application need not be returned to this Office for further consideration under 37 CFR § 1.47(a).**

The Technology Center will be notified of this decision, and jurisdiction over this application is transferred to the Technology Center, so that the application may receive further processing. The Technology Center's support staff will notify the Examiner of this decision, so that the present application can receive further processing in due course.

The concurrently submitted petition pursuant to 37 C.F.R. § 1.182 is **DISMISSED** as unnecessary, since the original petition pursuant to 37 C.F.R. § 1.47(a) served as a response to the notice of October 7, 2010. The $130 petition fee will be refunded to Deposit Account No. 02-4377 in due course.

Telephone inquiries regarding *this decision* should be directed to the undersigned at (571) 272-3225.[2] All other inquiries concerning examination procedures or status of the application should be directed to the Technology Center.

/Paul Shanoski/
Paul Shanoski
Senior Attorney
Office of Petitions

2 Petitioner will note that all practice before the Office should be in writing, and the action of the Office will be based exclusively on the written record in the Office. See 37 C.F.R. § 1.2. As such, Petitioner is reminded that no telephone discussion may be controlling or considered authority for Petitioner's further action(s).

UNITED STATES PATENT AND TRADEMARK OFFICE

Commissioner for Patents
United States Patent and Trademark Office
P.O. Box 1450
Alexandria, VA 22313-1450
www.uspto.gov

JOSEPH BAIN
NOVAK DRUCE & QUIGG LLP
525 OKEECHOBEE BLVD
SUITE 1500
WEST PALM BEACH FL 33401

MAILED

FEB 02 2011

OFFICE OF PETITIONS

In re Application:	:	
Tan et al.	:	
Application No. 12/885,894	:	ON PETITION
Filed: September 20, 2010	:	
Attorney Docket No. 10216-3/1	:	

This is a notice regarding your request for acceptance of a fee deficiency submission under 37 CFR 1.28 filed December 8, 2010.

On September 1, 1998, the Court of Appeals for the Federal Circuit held that 37 CFR 1.28(c) is the sole provision governing the time for correction of the erroneous payment of the issue fee as a small entity. **See DH Technology v. Synergystex International, Inc. 154 F.3d 1333, 47 USPQ2d 1865 (Fed. Cir. Sept. 1, 1998).**

The Office no longer investigates or rejects original or reissue applications under 37 CFR 1.56. **1098 Off. Gaz. Pat. Office 502 (January 3, 1989)**. Therefore, nothing in this Notice is intended to imply that an investigation was done.

Your fee deficiency submission under 37 CFR 1.28 is hereby **ACCEPTED**.

This application is no longer entitled to small entity status. Accordingly, all future fees paid in this application must be paid at the large entity rate.

Telephone inquires concerning this decision should be directed to the undersigned at (571) 272-7751.

Joan Olszewski
Petitions Examiner
Office of Petitions

UNITED STATES PATENT AND TRADEMARK OFFICE

UNITED STATES DEPARTMENT OF COMMERCE
United States Patent and Trademark Office
Address: COMMISSIONER FOR PATENTS
P.O. Box 1450
Alexandria, Virginia 22313-1450
www.uspto.gov

APPLICATION NO.	FILING DATE	FIRST NAMED INVENTOR	ATTORNEY DOCKET NO.	CONFIRMATION NO.
12/885,904	09/20/2010	Shunji TAKEI	26717	9625

23389 7590 07/08/2011
SCULLY SCOTT MURPHY & PRESSER, PC
400 GARDEN CITY PLAZA
SUITE 300
GARDEN CITY, NY 11530

EXAMINER	
ART UNIT	PAPER NUMBER
3767	

MAIL DATE	DELIVERY MODE
07/08/2011	PAPER

Please find below and/or attached an Office communication concerning this application or proceeding.

The time period for reply, if any, is set in the attached communication.

UNITED STATES PATENT AND TRADEMARK OFFICE

Commissioner for Patents
United States Patent and Trademark Office
P.O. Box 1450
Alexandria, VA 22313-1450
www.uspto.gov

SCULLY SCOTT MURPHY & PRESSER, PC
400 GARDEN CITY PLAZA
SUITE 300
GARDEN CITY NY 11530

In re Application of: TAKEI, SHUNJI Serial No.: 12/885904 Filed: September 20, 2010 Attorney Docket No. : 26717 Title: DETECTING APPARATUS AND MEDICAL CONTROL METHOD	: DECISION ON A REQUEST TO : PARTICIPATE IN PATENT : PROSECUTION HIGHWAY : PROGRAM AND PETITION : TO MAKE SPECIAL UNDER : CFR 1.102(a)

This is a decision on the request to participate in the Patent Prosecution Highway (PPH) program and the petition under 37 CFR 1.102(a), filed June 20, 2011 to make the above-identified application special.

The request and petition are **granted.**

A grantable request to participate in the PPH pilot program and petition to make special require:

(1) The U.S. application must validly claim priority under 35 U.S.C. 119(a) to one or more applications filed in the JPO;
(2) Applicant must submit a copy of the allowable/patentable claim(s) from the JPO application(s) along with an English translation thereof and a statement that the English translation is accurate;
(3) All the claims in the U.S. application must sufficiently correspond or be amended to sufficiently correspond to the allowable/patentable claim(s) in the JPO application(s);
(4) Examination of the U.S. application has not begun;
(5) Applicant must submit a copy of all the office actions from each of the JPO application(s) containing the allowable/patentable claim(s) along with an English translation thereof and a statement that the English translation is accurate; and
(6) Applicant must submit an IDS listing the documents cited by the JPO examiner in the JPO office action along with copies of documents except U.S. patents or U.S. patent application publications.

In light of the petition being properly submitted, the request to participate in the PPH program and the petition comply with the above requirements. Accordingly, the above-identified application has been accorded "special" status.

The applicant is encouraged to cite and submit all relevant prior art references, if any, to facilitate examination in this application.

Response must be filed via EFS-Web. Telephone inquiries concerning this decision should be directed to Henry C. Yuen, at 571-272-4856.

Petition is **granted**.

/Henry C. Yuen/

Henry C. Yuen
Special Programs Examiner
Technology Center 3700
Tel: 571-272-4856

UNITED STATES PATENT AND TRADEMARK OFFICE

Commissioner for Patents
United States Patent and Trademark Office
P.O. Box 1450
Alexandria, VA 22313-1450
www.uspto.gov

KELLEY DRYE & WARRANT LLP
STEVEN J. MOORE
400 ATLANTIC STREET, 13TH FLOOR
STAMFORD, CT 06901

MAILED

APR 18 2011

OFFICE OF PETITIONS

In re Application of	:	
James Jollota, et al.	:	
Application No. 12/885,908	:	DECISION ON PETITION
Filed: September 20, 2010	:	TO WITHDRAW
Attorney Docket No. STRIX-104.2(P)(PCT)(US)(C	:	FROM RECORD
	:	

This is a decision on the Request to Withdraw as attorney or agent of record under 37 C.F.R. § 1.36(b), filed February 25, 2011.

The request is **APPROVED**.

A grantable request to withdraw as attorney/agent of record must be signed by every attorney/agent seeking to withdraw or contain a clear indication that one attorney is signing on behalf of another/others. A request to withdraw will not be approved unless at least 30 (thirty) days would remain between the date of approval and the later of the expiration date of a time to file a response or the expiration date of the maximum time period which can be extended under 37 C.F.R. § 1.136(a).

The request was signed by Anatoly Frenkel on behalf of all attorneys of record. All attorneys/agents have been withdrawn. Applicant is reminded that there is no attorney of record at this time.

All future communications from the Office will be directed to the assignee of the entire interest at the first copied address below until otherwise properly notified by the applicant.

There is an outstanding Office action mailed on March 17, 2011 that requires a reply from the applicant.

Telephone inquiries concerning this decision should be directed to Terri Johnson at 571-272-2991.

/Terri Johnson/
Terri Johnson
Petitions Examiner
Office of Petitions

cc: **STRIX SYSTEMS, INC.**
2350 MISSION COLLEGE BLVD.
SUITE 1070
SANTA CLARA, CA 95054

UNITED STATES PATENT AND TRADEMARK OFFICE

UNITED STATES DEPARTMENT OF COMMERCE
United States Patent and Trademark Office
Address: COMMISSIONER FOR PATENTS
P.O. Box 1450
Alexandria, Virginia 22313-1450
www.uspto.gov

APPLICATION NUMBER	FILING OR 371(C) DATE	FIRST NAMED APPLICANT	ATTY. DOCKET NO./TITLE
12/885,908	09/20/2010	James M. Jollota	STRIX-104.2(P)(PCT)(US)(C

CONFIRMATION NO. 9630

47670
KELLEY DRYE & WARREN LLP
STEVEN J. MOORE
400 ALTLANTIC STREET , 13TH FLOOR
STAMFORD, CT 06901

POWER OF ATTORNEY NOTICE

OC000000047162656

Date Mailed: 04/14/2011

NOTICE REGARDING CHANGE OF POWER OF ATTORNEY

This is in response to the Power of Attorney filed 02/25/2011.

- The withdrawal as attorney in this application has been accepted. Future correspondence will be mailed to the new address of record. 37 CFR 1.33.

/tsjohnson/

Office of Data Management, Application Assistance Unit (571) 272-4000, or (571) 272-4200, or 1-888-786-0101

UNITED STATES PATENT AND TRADEMARK OFFICE

Commissioner for Patents
United States Patent and Trademark Office
P.O. Box 1450
Alexandria, VA 22313-1450
www.uspto.gov

LADAS & PARRY LLP
224 SOUTH MICHIGAN AVENUE
SUITE 1600
CHICAGO, IL 60604

MAILED

AUG 31 2011

OFFICE OF PETITIONS

In re Application of :
Hee Young Lee :
Application No. 12/885,918 : ON PETITION
Filed: September 20, 2010 :
Attorney Docket No.: CU-8869 :

This is a decision on the petition under 37 CFR 1.137(b), filed August 4, 2011, to revive the above-identified application.

The petition is **GRANTED**.

The application became abandoned for failure to timely respond to a Notice to File Corrected Application Papers mailed October 6, 2010, requiring replacement drawings in compliance with 37 CFR 1.84 and 37 CFR 1.121(d). The Notice set a period for reply of two (2) months from the mail date of the Notice. No extension of time under the provisions of 37 CFR 1.136(a) was obtained. Accordingly, the application became abandoned on December 7 2010. A Notice of Abandonment was mailed on June 9, 2011. On August 4, 2011, the present petition was filed.

The petition satisfies the requirements of 37 CFR 1.137(b) in that petitioner has supplied (1) the reply in the form of replacement drawings; (2) the petition fee of $810; and (3) an adequate statement of unintentional delay.

The application is being referred to the Office of Patent Application Processing (OPAP) for review of the drawings provided August 4, 2011.

Telephone inquires related to this decision should be directed to the undersigned at (571) 272-3204. Telephone inquiries related to processing at OPAP should be directed to their hotline at (571) 272-4000.

/SDB/

Sherry D. Brinkley
Petitions Examiner
Office of Petitions

UNITED STATES PATENT AND TRADEMARK OFFICE

Commissioner for Patents
United States Patent and Trademark Office
P.O. Box 1450
Alexandria, VA 22313-1450
www.uspto.gov

Decision Date : October 3,2011

In re Application of :

Benoit Schmitt

Application No : 12885975

Filed : 20-Sep-2010

Attorney Docket No : 21.1510DIV1

DECISION ON PETITION

UNDER CFR 1.137(b)

This is an electronic decision on the petition under 37 CFR 1.137(b), filed October 3,2011 , to revive the above-identified application.

The petition is **GRANTED.**

The above-identified application became abandoned for failure to reply in a timely manner to the Notice of Allowance and Issue Fee(s) Due. The date of abandonment is the day after the expiration date of the period set for reply in the Notice.

The electronic petition satisfies the conditions for revival pursuant to the provisions of 37 CFR 1.137(b) in that (1) the reply in the form of payment of the Issue Fee and the Publication Fee (if necessary); (2) the petition fee as set forth in 37 CFR 1.17 (m); (3) the drawing correction and/or other deficiencies (if necessary); and (4) the required statement of unintentional delay have been received. Accordingly, the Issue Fee payment is accepted as having been unintentionally delayed.

It is not apparent whether the person signing the statement of unintentional delay was in a position to have firsthand or direct knowledge of the facts and circumstances of the delay at issue. Nevertheless, such statement is being treated as having been made as the result of a reasonable inquiry into the facts and circumstances of such delay. See 37 CFR 10.18(b) and Changes to Patent Practice and Procedure; Final Rule Notice, 62 Fed. Reg. 53131, 53178 (October 10, 1997), 1203 Off. Gaz. Pat. Office 63, 103 (October 21, 1997). In the event that such an inquiry has not been made, petitioner must make such an inquiry. If such inquiry results in the discovery that it is not correct that the entire delay in filing the required reply from the due date for the reply until the filing of a grantable petition pursuant to 37 CFR 1.137(b) was unintentional, petitioner must notify the Office.

Telephone inquiries concerning this decision should be directed to the Patent Electronic Business Center (EBC) at 866-217-9197.

This application file is being directed to the Office of Data Management.

Office of Petitions

Doc Code: PET.AUTO Document Description: Petition automatically granted by EFS-Web	PTO/SB/64 U.S. Patent and Trademark Office Department of Commerce

Electronic Petition Request	PETITION FOR REVIVAL OF AN APPLICATION FOR PATENT ABANDONED UNINTENTIONALLY UNDER 37 CFR 1.137(b)
Application Number	12885975
Filing Date	20-Sep-2010
First Named Inventor	Benoit Schmitt
Art Unit	3676
Examiner Name	YONG-SUK RO
Attorney Docket Number	21.1510DIV1
Title	SURFACE FORMATION MONITORING SYSTEM AND METHOD

The above-identified application became abandoned for failure to file a timely and proper reply to a notice or action by the United States Patent and Trademark Office. The date of abandonment is the day after the expiration date of the period set for reply in the office notice or action plus any extensions of time actually obtained.

APPLICANT HEREBY PETITIONS FOR REVIVAL OF THIS APPLICATION

NOTE: A grantable petition requires the following items:
(1) Petition fee;
(2) Reply and/or issue fee;
(3) Terminal disclaimer with disclaimer fee – required for all utility and plant applications filed before June 8, 1995; and for all design applications;
(4) Statement that the entire delay was unintentional.

Petition fee
The petition fee under 37CFR 1.17(m) is attached.

☐ Applicant claims SMALL ENTITY status. See 37 CFR 1.27.

☐ Applicant is no longer claiming SMALL ENTITY status. See 37 CFR 1.27(g)(2).

☐ Applicant(s) status remains as SMALL ENTITY.

☒ Applicant(s) status remains as other than SMALL ENTITY.

Issue Fee and Publication Fee :

Issue Fee and Publication Fee must accompany ePetition.

☒ Issue Fee Transmittal is attached

Drawing corrections and/ or other deficiencies.

◉ Drawing corrections and/ or other deficiencies are not required

○ I certify, in accordance with 37 CFR 1.4.(D)(4), that drawing corrections and/ or other deficiencies have previously been filed on

○ Drawing corrections and/ or other deficiencies are attached.

☒ STATEMENT: The entire delay in filing the required reply from the due date for the required reply until the filing of a grantable petition under 37 CFR 1.137(b) was unintentional.

THIS PORTION MUST BE COMPLETED BY THE SIGNATORY OR SIGNATORIES

I certify, in accordance with 37 CFR 1.4(d)(4) that I am:

○ An attorney or agent registered to practice before the Patent and Trademark Office who has been given power of attorney in this application.

◉ An attorney or agent registered to practice before the Patent and Trademark Office, acting in a representative capacity.

○ A sole inventor

○ A joint inventor; I certify that I am authorized to sign this submission on behalf of all of the inventors.

○ A joint inventor; all of whom are signing this e-petition.

○ The assignee of record of the entire interest that has properly made itself of record pursuant to 37 CFR 3.71.

Signature	/Jianguang Du/
Name	Jianguang Du
Registration Number	61385

UNITED STATES PATENT and TRADEMARK OFFICE

COMMISSIONER FOR PATENTS
UNITED STATES PATENT AND TRADEMARK OFFICE
P.O BOX 1450
ALEXANDRIA, VA 22313-1450
www.uspto.gov

MAILED

JUL 19 2011

PCT LEGAL ADMINISTRATION

MERCHANT & GOULD PC
P.O. BOX 2903
MINNEAPOLIS MN 55402-0903

In re Application of	:	DECISION ON
Allan DICKNER	:	
Application No.: 12/886,101	:	PETITION UNDER
Filing Date: 20 September 2010	:	
Attorney's Docket No.: 05822.418FPC1	:	37 CFR §1.78(a)(3)
For: A LOADING LEDGE	:	

This is in response to applicant's communication "PETITION TO ACCEPT A DELAYED CLAIM FOR PRIORITY IN COMPLIANCE WITH 37 C.F.R. 1.78(a)(3)" filed 10 March 2011 to accept an unintentionally delayed claim under 35 U.S.C. §120 for the benefit of the prior-filed applications set forth in the first paragraph of the specification filed on 20 September 2010.

The petition is **DISMISSED**.

A petition for acceptance of a claim for late priority under 37 CFR 1.78(a)(3) is only applicable to those applications filed on or after November 29, 2000. Further, the petition is appropriate only after the expiration of the period specified in 37 CFR 1.78(a)(2)(ii). In addition, the petition under 37 CFR 1.78(a)(3) must be accompanied by:

(1) the reference required by 35 U.S.C. 120 and paragraph (a)(2) of this section to the prior filed application, unless previously submitted:

(2) the surcharge set forth in § 1.17(t); and

(3) a statement that the entire delay between the date the claim was due under 37 CFR 1.78(a)(2)(ii) of this section and the date the claim was filed was unintentional. The Director may require additional information where there is a question whether the delay was unintentional.

The petition has satisfied item (2) above, but not items (1) and (3) under 37 CFR 1.78(a)(3).

Regarding requirement (1), MPEP 201.11, Section C., (Benefit Claims to Multiple Prior Application), states in the relevant part, "The reference to the prior applications must identify all of the prior applications and indicate the relationship (i.e., continuation, divisional, or continuation-in-part) between each nonprovisional application in order to establish copendency throughout the entire chain of prior applications. Appropriate references must be made in each intermediate application in the chain of prior applications. If an applicant desires, for example, the following benefit claim: "this application is a continuation of Application No. C, filed ---, which is a continuation of Application No. B, filed ---, which claims the benefit of provisional Application No. A, filed ---,"

then Application No. C must have a reference to Application No. B and provisional Application No. A, and Application No. B must have a reference to provisional Application No. A." **(Emphasis added)**

In the present case, application 11/083,533 is not a U.S. national stage application. Thus the benefit claim does not contain a proper relationship under 35 U.S.C. 120 (i.e., continuation, divisional, or continuation-in-part) to international application PCT/SE2003/001437.

In addition, intermediate application 11/083,533 does not contain the proper relationship under 35 U.S.C. 120 to international application PCT/SE2003/001437 as required by 37 CFR 1.78(a)(2)(i).

(2) Regarding requirement (2), the surcharge fee required by 37 CFR 1.17(t) has been submitted by credit card; and

(3) Regarding requirement (3), the required statement has not been provided.

Accordingly, before the petition under 37 CFR § 1.78(a)(3) can be granted, a renewed petition under 37 CFR § 1.78(a)(3) and a substitute amendment (complying with 37 CFR 1.121) stating the relationship of the prior-filed application to the instant application is required.

Any further correspondence with respect to this matter may be filed electronically via EFS-Web selecting the document description "Petition for review and processing by the PCT Legal Office" or by mail addressed to Mail Stop PCT, Commissioner for Patents, Office of PCT Legal Administration, P.O. Box 1450, Alexandria, Virginia 22313-1450, with the contents of the letter marked to the attention of the Office of PCT Legal Administration.

Rafael Bacares
Legal Examiner
PCT Legal Administrative Office
Telephone: (571) 272-3276
Facsimile: (571) 273-0459

Boris Milef
Legal Examiner
PCT Legal Administrative Office

UNITED STATES PATENT and TRADEMARK OFFICE

COMMISSIONER FOR PATENTS
UNITED STATES PATENT AND TRADEMARK OFFICE
P.O BOX 1450
ALEXANDRIA, VA 22313-1450
www.uspto.gov

MERCHANT & GOULD PC
P.O. BOX 2903
MINNEAPOLIS MN 55402-0903

MAILED
OCT 19 2011
PCT LEGAL ADMINISTRATION

In re Application of	:	DECISION ON
Allan DICKNER	:	
Application No.: 12/886,101	:	RENEWED
Filing Date: 20 September 2010	:	PETITION UNDER
Attorney's Docket No.: 05822.418FPC1	:	
For: A LOADING LEDGE	:	37 CFR §1.78(a)(3)

This is in response to applicants' "RENEWED PETITION TO ACCEPT A DELAYED CLIAM FOR PRIORITY IN COMPLIANCE WITH 37 C.F.R 1.78(a)(3)," filed 17 August 2011, which is being treated as a renewed petition under 37 CFR § 1.78(a)(3).

In a decision from this Office on 19 July 2011, the petition under 37 CFR §1.78(a)(3) was dismissed as requirement (1) was not met. The decision stated that intermediate application 11/083,533 did not contain a proper reference establishing the relationship to international application PCT/SE2007/001437.

On 17 August 2011, petitioner filed a renewed petition under 37 CFR §1.78(a)(3) to claim priority under 35 USC 120 and making the appropriate reference in the intermediate application 11/083,533 so that the chain of prior applications have the proper references establishing the relationships.

The petition is **DISMISSED**.

A petition for acceptance of a claim for late priority under 37 CFR 1.78(a)(3) is only applicable to those applications filed on or after November 29, 2000. Further, the petition is appropriate only after the expiration of the period specified in 37 CFR 1.78(a)(2)(ii). In addition, the petition under 37 CFR 1.78(a)(3) must be accompanied by:

(1) the reference required by 35 U.S.C. 120 and paragraph (a)(2) of this section to the prior filed application, unless previously submitted:

(2) the surcharge set forth in § 1.17(t); and

(3) a statement that the entire delay between the date the claim was due under 37 CFR 1.78(a)(2)(ii) of this section and the date the claim was filed was unintentional. The Director may require additional information where there is a question whether the delay was unintentional.

The petition satisfies items (2) – (3) under 37 CFR 1.78(a)(3) but not item (1).

Regarding requirement (1) although, a proper reference to the prior-filed applications has now been included in an amendment to the first sentence of the specification following the title, the intermediate application 11/083,533 still does contain a proper reference establishing the relationship to international application PCT/SE2003/001437 because the supplemental ADS was not acceptable. The supplemental ADS filed for 11/083,533 did not have a signature of the applicant or representative as required in accordance with 37 CFR 1.33.

Regarding requirement (2), the proper surcharge of $1,410.00 under 37 CFR 1.17(t) has been provided by credit card.

Regarding requirement (3), the proper statement has been provided.

CONCLUSION

For the reason above, the petition under 37 CFR 1.78(a)(3) is **DISMISSED** without prejudice.

Any inquiries concerning this decision may directed to Rafael Bacares at (571) 272-3276.

Accordingly, before the petition under 37 CFR § 1.78(a)(3) can be granted, a renewed petition under 37 CFR § 1.78(a)(3) and a proper supplemental ADS signed in accordance with 37 CFR 1.33 for intermediate application 11/083,533 is required.

Any further correspondence with respect to this matter may be filed electronically via EFS-Web selecting the document description "Petition for review and processing by the PCT Legal Office" or by mail addressed to Mail Stop PCT, Commissioner for Patents, Office of PCT Legal Administration, P.O. Box 1450, Alexandria, Virginia 22313-1450, with the contents of the letter marked to the attention of the Office of PCT Legal Administration.

Rafael Bacares
Legal Examiner
PCT Legal Administrative Office
Telephone: (571) 272-3276
Facsimile: (571) 273-0459

Boris Milef
Legal Examiner
PCT Legal Administrative Office

UNITED STATES PATENT and TRADEMARK OFFICE

COMMISSIONER FOR PATENTS
UNITED STATES PATENT AND TRADEMARK OFFICE
P.O BOX 1450
ALEXANDRIA, VA 22313-1450
www.uspto.gov

MERCHANT & GOULD PC
P.O. BOX 2903
MINNEAPOLIS MN 55402-0903

MAILED

DEC 20 2011

PCT LEGAL ADMINISTRATION

In re Application of	:	DECISION ON
Allan DICKNER	:	
Application No.: 12/886,101	:	RENEWED
Filing Date: 20 September 2010	:	PETITION UNDER
Attorney's Docket No.: 05822.418FPC1	:	
For: A LOADING LEDGE	:	37 CFR §1.78(a)(3)

This is in response to applicant's communication "RENEWED PETITION TO ACCEPT A DELAYED CLAIM FOR PRIORITY IN COMPLIANCE WITH 37 CFR 1.78(a)(3)" filed 02 November 2011.

BACKGROUND

In a decision from this Office on 19 October 2011, the petition under 37 CFR §1.178(a)(3) was dismissed because item (1) was not satisfied.

On 02 November 2011, petitioner filed a renewed petition under 37 CFR 1.78(3) to establish the proper relationship to applications 11/083,533 and PCT/SE2007/001437 on a supplemental ADS.

DISCUSSION

A petition for acceptance of a claim for late priority under 37 CFR 1.78(a)(3) is only applicable to those applications filed on or after November 29, 2000. Further, the petition is appropriate only after the expiration of the period specified in 37 CFR 1.78(a)(2)(ii). In addition, the petition under 37 CFR 1.78(a)(3) must be accompanied by:

(1) the reference required by 35 U.S.C. 120 and paragraph (a)(2) of this section to the prior filed application, unless previously submitted:

(2) the surcharge set forth in § 1.17(t); and

(3) a statement that the entire delay between the date the claim was due under 37 CFR 1.78(a)(2)(ii) of this section and the date the claim was filed was unintentional. The Director may require additional information where there is a question whether the delay was unintentional.

Regarding requirement (1) a proper reference to the prior-filed applications, 11/083,533 and PCT/SE2003/001437, has been included in the supplemental Application Data Sheet (ADS), and the ADS now contains a proper signature in accordance with 37 CFR 1.33.

In addition, intermediate application 11/083,533 now contains a proper reference establishing the relationship to international application PCT/SE2003/001437 on the supplemental Application Data Sheet (ADS), and the ADS also contains a proper signature in accordance with 37 CFR 1.33.

Regarding requirement (2), the surcharge has been provided.

Regarding requirement (3), the proper statement has been provided.

Accordingly, having found that the instant petition for acceptance of an unintentionally delayed claim for the benefit of priority under 35 U.S.C.§§120 and 365(c) to the prior-filed international application satisfies the conditions of 37 CFR 1.78(a)(3), the petition is granted.

The granting of the petition to accept the delayed benefit claim to the prior-filed applications under 37 CFR 1.78(a)(3) should not be construed as meaning that this application is entitled to the benefit of the prior-filed applications. In order for this application to be entitled to the benefit of the prior-filed applications, all other requirements under 35 U.S.C. § 120 and 37 CFR 1.78(a)(1) and (a)(2) must be met. Similarly, the fact that the corrected Filing Receipt accompanying this decision on petition includes the prior-filed applications should not be construed as meaning that applicant is entitled to the claim for benefit of priority to the prior-filed applications noted thereon. Accordingly, the examiner will, in due course, consider this benefit claim and determine whether this application is entitled to the benefit of the earlier filing date.

CONCLUSION

For the reasons above, the petition under 37 CFR 1.78(a)(3) is **GRANTED**.

Any questions concerning this matter may be directed to Rafael Bacares at (571) 272-3276.

Boris Milef
Legal Examiner
Office of PCT Legal Administration

Doc Code: PET.AUTO Document Description: Petition automatically granted by EFS-Web	PTO/SB/140 U.S. Patent and Trademark Office Department of Commerce

Electronic Petition Request	**PETITION TO WITHDRAW AN APPLICATION FROM ISSUE AFTER PAYMENT OF THE ISSUE FEE UNDER 37 CFR 1.313(c)**
Application Number	12886137
Filing Date	20-Sep-2010
First Named Inventor	Ian Robinson
Art Unit	2819
Examiner Name	KHAI NGUYEN
Attorney Docket Number	RAY-007US (09-0425)
Title	COMPENSATION OF CLOCK JITTER IN ANALOG-DIGITAL CONVERTER APPLICATIONS

An application may be withdrawn from issue for further action upon petition by the applicant. To request that the Office withdraw an application from issue, applicant must file a petition under this section including the fee set forth in § 1.17(h) and a showing of good and sufficient reasons why withdrawal of the application from issue is necessary.

APPLICANT HEREBY PETITIONS TO WITHDRAW THIS APPLICATION FROM ISSUE UNDER 37 CFR 1.313(c).

A grantable petition requires the following items:
(1) Petition fee; and
(2) One of the following reasons:
(a) Unpatentability of one or more claims, which must be accompanied by an unequivocal statement that one or more claims are unpatentable, an amendment to such claim or claims, and an explanation as to how the amendment causes such claim or claims to be patentable;
(b) Consideration of a request for continued examination in compliance with § 1.114 (for a utility or plant application only); or
(c) Express abandonment of the application. Such express abandonment may be in favor of a continuing application, but not a CPA under 37 CFR 1.53(d).

Petition Fee

☐ Applicant claims SMALL ENTITY status. See 37 CFR 1.27.

☐ Applicant is no longer claiming SMALL ENTITY status. See 37 CFR 1.27(g)(2).

☐ Applicant(s) status remains as SMALL ENTITY.

☒ Applicant(s) status remains as other than SMALL ENTITY

Reason for withdrawal from issue

◯ One or more claims are unpatentable ◉ Consideration of a request for continued examination (RCE) (List of Required Documents and Fees) ◯ Applicant hereby expressly abandons the instant application (any attorney/agent signing for this reason must have power of attorney pursuant to 37 CFR 1.32(b)).
RCE request,submission, and fee. ☐ I certify, in accordance with 37 CFR 1.4(d)(4) that : The RCE request ,submission, and fee have already been filed in the above-identified application on ☒ Are attached.
THIS PORTION MUST BE COMPLETED BY THE SIGNATORY OR SIGNATORIES I certify, in accordance with 37 CFR 1.4(d)(4) that I am: ◉ An attorney or agent registered to practice before the Patent and Trademark Office who has been given power of attorney in this application. ◯ An attorney or agent registered to practice before the Patent and Trademark Office, acting in a representative capacity. ◯ A sole inventor ◯ A joint inventor; I certify that I am authorized to sign this submission on behalf of all of the inventors ◯ A joint inventor; all of whom are signing this e-petition ◯ The assignee of record of the entire interest that has properly made itself of record pursuant to 37 CFR 3.71

Signature	/s Christopher E. Everett/
Name	/s Christopher E. Everett/
Registration Number	51659

UNITED STATES PATENT AND TRADEMARK OFFICE

Commissioner for Patents
United States Patent and Trademark Office
P.O. Box 1450
Alexandria, VA 22313-1450
www.uspto.gov

Decision Date : March 13, 2012

In re Application of :

Ian Robinson

DECISION ON PETITION

UNDER CFR 1.313(c)(2)

Application No : 12886137

Filed : 20-Sep-2010

Attorney Docket No : RAY-007US (09-0425)

This is an electronic decision on the petition under 37 CFR 1.313(c)(2), filed March 13, 2012 , to withdraw the above-identified application from issue after payment of the issue fee.

The petition is **GRANTED.**

The above-identified application is withdrawn from issue for consideration of a submission under 37 CFR 1.114 (request for continued examination). See 37 CFR 1.313(c)(2).

Petitioner is advised that the issue fee paid in this application cannot be refunded. If, however, this application is again allowed, petitioner may request that it be applied towards the issue fee required by the new Notice of Allowance.

Telephone inquiries concerning this decision should be directed to the Patent Electronic Business Center (EBC) at 866-217-9197.

This application file is being referred to Technology Center AU 2819 for processing of the request for continuing examination under 37 CFR 1.114 .

Office of Petitions

UNITED STATES PATENT AND TRADEMARK OFFICE

UNITED STATES DEPARTMENT OF COMMERCE
United States Patent and Trademark Office
Address: COMMISSIONER FOR PATENTS
P.O. Box 1450
Alexandria, Virginia 22313-1450
www.uspto.gov

APPLICATION NO.	FILING DATE	FIRST NAMED INVENTOR	ATTORNEY DOCKET NO.	CONFIRMATION NO.
12/886,144	09/20/2010	Phillip Belgrader	193954	1041

38598 7590 05/27/2011

ANDREWS KURTH LLP
1350 I STREET, N.W.
SUITE 1100
WASHINGTON, DC 20005

EXAMINER	
LU, FRANK WEI MIN	
ART UNIT	**PAPER NUMBER**
1634	

NOTIFICATION DATE	DELIVERY MODE
05/27/2011	ELECTRONIC

Please find below and/or attached an Office communication concerning this application or proceeding.

The time period for reply, if any, is set in the attached communication.

Notice of the Office communication was sent electronically on above-indicated "Notification Date" to the following e-mail address(es):

PTODC@andrewskurth.com

UNITED STATES PATENT AND TRADEMARK OFFICE

Commissioner for Patents
United States Patent and Trademark Office
P.O. Box 1450
Alexandria, VA 22313-1450
www.uspto.gov

ANDREWS KURTH LLP
1350 I STREET, N.W.
SUITE 1100
WASHINGTON DC 20005

Applicant: Belgrader et al.
Appl. No.: 12/886,144
Filing Date: September 20, 2010
Title: MAGNETIC LYSIS METHOD AND DEVICE
Attorney Docket No.: 193954
Pub. No.: US 2011/0070589 A1
Pub. Date: March 24, 2011

This is a decision on the request for republication of patent application publication under 37 CFR 1.221(a), filed on May 24, 2011, for the above-identified application.

The request under 37 CFR 1.221(a) is DISMISSED.

37 CFR 1.221(a) requires "a copy of the application in compliance with the Office electronic filing system requirements and be accompanied by the publication fee set forth in § 1.18(d) and the processing fee set forth in § 1.17(i)". If the request for republication does not comply with the electronic filing system requirements, the republication will not take place and the publication fee set forth in § 1.18(d) will be refunded. The processing fee will be retained.

The applicant did not supply a copy of the application in compliance with the Office electronic filing system, as required by 37 CFR 1.221(a) because **the applicant submitted the papers as a "Document for an existing application", which are entered into the application file, and not as a "Pre-Grant Publication" submission**. The request for republication does not comply with the electronic filing system requirements, thus republication will not take place.

Any request for republication under 37 CFR 1.221(a), must be submitted via the EFS system, as a Pre-Grant publication submission and must include a copy of the application in compliance with the Office electronic filing system requirements. The applicant is directed to the following website for additional instructions on how to submit a Pre-Grant Publication submission via the electronic filing system:

http://www.uspto.gov/ebc/portal/efs/pgpub_quickstart.pdf

Any questions or requests for reconsideration of the decision should be addressed as follows:

By mail to: Mail Stop PGPUB
Commissioner for Patents
P.O. Box 1450
Alexandria, Va. 22313-1450

By facsimile: 571-273-8300

Telephone inquiries regarding this correspondence should be directed to The Office of Data Management at 571-272-4200.

Tammy J. Koontz
Office of Data Management
United States Patent & Trademark Office

Adjustment date: 05/31/2011 KKING1
05/25/2011 INTEFSW 00004228 502849 12886144
01 FC:1504 300.00 CR

UNITED STATES PATENT AND TRADEMARK OFFICE

UNITED STATES DEPARTMENT OF COMMERCE
United States Patent and Trademark Office
Address: COMMISSIONER FOR PATENTS
P.O. Box 1450
Alexandria, Virginia 22313-1450
www.uspto.gov

APPLICATION NO.	FILING DATE	FIRST NAMED INVENTOR	ATTORNEY DOCKET NO.	CONFIRMATION NO.
12/886,195	09/20/2010	Scott C. Smith	20040.0002.NPUS00	1125

63467 7590 11/05/2010

Novak Druce + Quigg LLP
1000 Louisiana Street
Fifty-Third Floor
Houston, TX 77002

EXAMINER	
ART UNIT	PAPER NUMBER
1736	

MAIL DATE	DELIVERY MODE
11/05/2010	PAPER

Please find below and/or attached an Office communication concerning this application or proceeding.

The time period for reply, if any, is set in the attached communication.

UNITED STATES PATENT AND TRADEMARK OFFICE

Commissioner for Patents
United States Patent and Trademark Office
P.O. Box 1450
Alexandria, VA 22313-1450
www.uspto.gov

CST

NOV 05 2010

In re application of :
Scott Smith et al :
Serial No. 12/886,195 : DECISION ON PETITION
Filed: September 20, 2010 : TO MAKE SPECIAL
For: FOAM COMPOSITIONS FOR :
SELECTIVE RECOVERY OF OIL :
SPILLS AND OTHER APPLICATIONS :

This is a decision on the petition filed on September 20, 2010 to make the above-identified application special under the accelerated examination program.

The petition to make the application special is **DISMISSED.**

REGULATION AND PRACTICE

A grantable petition to make special under 37 C.F.R. § 1.102(d) and pursuant to the "Change to Practice for Petitions in Patent Applications to Make Special and for Accelerated Examination" published in the Federal Register on June 26, 2006 (71 Fed. Reg. 36323), must satisfy the following conditions:

I. Conditions Regarding the Application:

1. the application must be a non-reissue utility or design application filed under 37 CFR 1.111(a);

2. the application, the petition and the required fees must be filed electronically using the USPTO's electronic filing system (EFS), or EFS-web; if not filed electronically, a statement asserting that EFS and EFS-web were not available during the normal business hours;

3. at the time of filing, the application must be complete under 37 CFR 1.51 and in condition for examination;

4. the application must contain three or fewer independent claims and twenty or fewer total claims and the claims must be directed to a single invention.

II. Conditions Regarding the Petition:

The petition must:

1. be filed with the application;

2. include a statement that applicant agrees not to separately argue the patentability of any dependent claim during any appeal in the application;

3. include a statement that applicant agrees to make an election without traverse in a telephone interview;

4. include a statement that applicant agrees to conduct such an interview when requested by the examiner;

5. include a statement, made based on a good faith belief, that a preexamination search in compliance with the following requirements, was conducted, including an identification of the field of search by United States class and subclass, where applicable, and for database searches, the search logic or chemical structure or sequence used as a query, the name of the file(s) searched and the database service, and the date of the search.

The preexamination search must:

5.1 involve U.S. patents and patent application publications, foreign patent documents, and non-patent literature, unless the applicant can justify with reasonable certainty that no references more pertinent than those already identified are likely to be found in the eliminated sources and includes such a justification with this statement;

5.2. be directed to the claimed invention and encompass all of the features of the claims, giving the claims the broadest reasonable interpretation;

5.3. encompass the disclosed features that may be claimed.

6. must provide in support of the petition an accelerated examination support document.

An accelerated examination support document must include:

6.1. an information disclosure statement (IDS) in compliance with 37 CFR 1.98 citing each reference deemed most closely related to the subject matter of each of the claims;

6.2. an identification of all the limitations in the claims that are disclosed by the reference specifying where the limitation is disclosed in the cited reference;

6.3. a detailed explanation of how each of the claims are patentable over the references cited with particularity required by 37 CFR 1.111(b) and (c);

6.4. a concise statement of the utility of the invention as defined in each of the independent claims (unless the application is a design application);

6.5. a showing of where each limitation of the claims finds support under 35 USC 112, first paragraph, in the written description of the specification. If applicable, the showing must also identify: (1) each means- (or step) plus-function claim element that invokes consideration under 35 USC 112, sixth paragraph; and (2) the structure, material, or acts in the specification that corresponds to each means- (or step) plus-function claim element that invokes consideration under 35 USC 112, sixth paragraph; if the application claims the benefit of one or more applications under title 35, United States Code, the showing must also include where each limitation of the claims finds support under 35 USC 112, first paragraph, in each such application in which such supports exists;

6.6. an identification of any cited references that may be disqualified under 35 USC 103(c).

REVIEW OF FACTS

The conditions regarding the application (section I, subsections 1-4) discussed above are considered to have been met. Additionally, the conditions regarding the petition, section II, subsections 1-4 and 6, are considered to have been met. However, the petition fails to comply with condition II, subsection 5.

It appears that the search is incomplete. Note that a search in Class 210/subclass 924 and Class 502, subclasses 401 and 402 is also required.

Therefore, the petition fails to meet the required conditions to be accorded special status under the accelerated examination procedure.

DECISION

For the above-stated reasons, the petition is dismissed. The application will therefore be taken up by the examiner in its regular turn.

Petitioner is given a single opportunity to perfect the petition. Any request for reconsideration of this decision must be submitted within 1 (one) month or 30 (thirty) days, whichever is longer, (no extension of time under 37 CFR 1.136(a)) from the date of this decision in order to be considered timely. Any request for reconsideration must address the deficiencies indicated above.

Petitioner is reminded that, upon granting of the special status of the application on request for reconsideration, the application will be processed expeditiously. However, due to the dismissal of the instant petition, examination may not be completed within twelve months of the filing date of the application.

Any inquiry regarding this decision should be directed to Christine Tierney, Quality Assurance Specialist, at (571) 272-1055.

/Christine Tierney/

_____

Christine Tierney
Quality Assurance Specialist
Technology Center 1700

UNITED STATES PATENT AND TRADEMARK OFFICE

UNITED STATES DEPARTMENT OF COMMERCE
United States Patent and Trademark Office
Address: COMMISSIONER FOR PATENTS
P.O. Box 1450
Alexandria, Virginia 22313-1450
www.uspto.gov

APPLICATION NO.	FILING DATE	FIRST NAMED INVENTOR	ATTORNEY DOCKET NO.	CONFIRMATION NO.
12/886,195	09/20/2010	Scott C. Smith	41794.0086	1125

57600 7590 01/04/2011

HOLLAND & HART
222 South Main Street, Suite 2200
P.O. Box 11583
Salt Lake City, UT 84110

EXAMINER	
ART UNIT	PAPER NUMBER
1736	

MAIL DATE	DELIVERY MODE
01/04/2011	PAPER

Please find below and/or attached an Office communication concerning this application or proceeding.

The time period for reply, if any, is set in the attached communication.

UNITED STATES PATENT AND TRADEMARK OFFICE

Commissioner for Patents
United States Patent and Trademark Office
P.O. Box 1450
Alexandria, VA 22313-1450
www.uspto.gov

CST

1/4/11

In re application of
Scott Smith et al
Serial No. 12/886,195
Filed: September 20, 2010
For: FOAM COMPOSITIONS FOR SELECTIVE RECOVERY OF OIL SPILLS AND OTHER APPLICATIONS

DECISION ON PETITION TO MAKE SPECIAL

A decision dismissing the petition to make the above-identified application special was mailed on November 5, 2010. The decision set a non-extendable time period of one month or 30 (thirty) days, whichever is longer, from its mailing date to correct the deficiency/deficiencies in the petition.

As of January 3, 2011, neither a reply nor a renewed petition has been received. Accordingly, the application is no longer eligible for the accelerated examination program.

The application will remain in its regular status and will be taken up by the examiner for action in its regular turn.

Petitioner is reminded that a single opportunity to perfect the petition is given. Therefore, further petitions for accelerated examination in this application will not be entertained.

Any inquiry regarding this decision should be directed to Christine Tierney, Quality Assurance Specialist, at (571) 272-1055.

/Christine Tierney/

Christine Tierney
Quality Assurance Specialist
Technology Center 1700

UNITED STATES PATENT AND TRADEMARK OFFICE

UNITED STATES DEPARTMENT OF COMMERCE
United States Patent and Trademark Office
Address: COMMISSIONER FOR PATENTS
P.O. Box 1450
Alexandria, Virginia 22313-1450
www.uspto.gov

APPLICATION NO.	FILING DATE	FIRST NAMED INVENTOR	ATTORNEY DOCKET NO.	CONFIRMATION NO.
12/886,197	09/20/2010	Yongxiong Liao	13674-355	1128

7590 04/02/2012

Huawei/BHGL
P.O. Box 10395
Chicago, IL 60610

EXAMINER	
KOENIG, ANDREW Y	
ART UNIT	PAPER NUMBER
2423	
MAIL DATE	DELIVERY MODE
04/02/2012	PAPER

DECISION GRANTING PETITION UNDER 37 CFR 1.138(d)

The declaration of express abandonment is recognized

This is in response to the petition under 37 CFR 1.138(d), requesting for a refund of any previously paid search fee and excess claims fee in the above-identified application.

The petition is granted.

The express abandonment is recognized. Any previously paid search fee and excess claims fee are hereby refunded.

Telephone inquiries should be directed to the Office of Data Management at (571) 272-4200.

Patent Publication Branch
Office of Data Management

UNITED STATES PATENT AND TRADEMARK OFFICE

UNITED STATES DEPARTMENT OF COMMERCE
United States Patent and Trademark Office
Address: COMMISSIONER FOR PATENTS
P.O. Box 1450
Alexandria, Virginia 22313-1450
www.uspto.gov

APPLICATION NO.	FILING DATE	FIRST NAMED INVENTOR	ATTORNEY DOCKET NO.	CONFIRMATION NO.
12/886,201	09/20/2010	Phillip Belgrader	193956	1133

38598 7590 05/27/2011

ANDREWS KURTH LLP
1350 I STREET, N.W.
SUITE 1100
WASHINGTON, DC 20005

EXAMINER	
ART UNIT	PAPER NUMBER
1773	

NOTIFICATION DATE	DELIVERY MODE
05/27/2011	ELECTRONIC

Please find below and/or attached an Office communication concerning this application or proceeding.

The time period for reply, if any, is set in the attached communication.

Notice of the Office communication was sent electronically on above-indicated "Notification Date" to the following e-mail address(es):

PTODC@andrewskurth.com

UNITED STATES PATENT AND TRADEMARK OFFICE

Commissioner for Patents
United States Patent and Trademark Office
P.O. Box 1450
Alexandria, VA 22313-1450
www.uspto.gov

ANDREWS KURTH LLP
1350 I STREET, N.W.
SUITE 1100
WASHINGTON DC 20005

Applicant: Belgrader et al.
Appl. No.: 12/886,201
Filing Date: September 20, 2010
Title: INTEGRATED CARTRIDGE
Attorney Docket No.: 193956
Pub. No.: US 2011/0071055 A1
Pub. Date: March 24, 2011

This is a decision on the request for republication of patent application publication under 37 CFR 1.221(a), filed on May 24, 2011, for the above-identified application.

The request under 37 CFR 1.221(a) is DISMISSED.

37 CFR 1.221(a) requires "a copy of the application in compliance with the Office electronic filing system requirements and be accompanied by the publication fee set forth in § 1.18(d) and the processing fee set forth in § 1.17(i)". If the request for republication does not comply with the electronic filing system requirements, the republication will not take place and the publication fee set forth in § 1.18(d) will be refunded. The processing fee will be retained.

The applicant did not supply a copy of the application in compliance with the Office electronic filing system, as required by 37 CFR 1.221(a) because **the applicant submitted the papers as a "Document for an existing application", which are entered into the application file, and not as a "Pre-Grant Publication" submission**. The request for republication does not comply with the electronic filing system requirements, thus republication will not take place.

Any request for republication under 37 CFR 1.221(a), must be submitted via the EFS system, as a Pre-Grant publication submission and must include a copy of the application in compliance with the Office electronic filing system requirements. The applicant is directed to the following website for additional instructions on how to submit a Pre-Grant Publication submission via the electronic filing system:

http://www.uspto.gov/ebc/portal/efs/pgpub_quickstart.pdf

Any questions or requests for reconsideration of the decision should be addressed as follows:

By mail to: Mail Stop PGPUB
Commissioner for Patents
P.O. Box 1450
Alexandria, Va. 22313-1450

By facsimile: 571-273-8300

Telephone inquiries regarding this correspondence should be directed to The Office of Data Management at 571-272-4200.

Tammy J. Koontz
Office of Data Management
United States Patent & Trademark Office

Adjustment date: 05/31/2011 KKING1
05/25/2011 INTEFSW 00004351 502849 12886201
01 FC:1504 300.00 CR

UNITED STATES PATENT AND TRADEMARK OFFICE

Commissioner for Patents
United States Patent and Trademark Office
P.O. Box 1450

MAILED

JUN 10 2011

OFFICE OF PETITIONS

OHLANDT, GREELEY, RUGGIERO & PERLE, LLP
ONE LANDMARK SQUARE, 10TH FLOOR
STAMFORD CT 06901

In re Application of :
Eran EILAT et al. : ON PETITION
Application No. 12/886,206 :
Filed: May 5, 2011 :
Atty. Docket No.: 155.8231USX1

This is in response to the petition under 37 CFR 1.47(b), filed May 5, 2011.

The petition is **GRANTED.**

Petitioner has shown that the non-signing inventors Eran Eilat, Dagan Eshar, Gershom Kutliroff, and Shai Shimon Yagur have refused to join in the filing of the above-identified application.

The application and papers have been reviewed and found in compliance with 37 CFR 1.47(b). This application is hereby accorded Rule 1.47(a) status.

As provided in 37 CFR 1.47(c), this Office will forward notice of this application's filing to the non-signing inventors at the addresses given in the petition. Notice of the filing of this application will also be published in the Official Gazette.

This application is being referred to the Office of Patent Application Processing for pre-examination processing.

Telephone inquires regarding this decision should be directed to Robert DeWitty, Petitions Attorney, Office of Petitions (571-272-8427).

for

David Bucci
Petitions Examiner
Office of Petitions

UNITED STATES PATENT AND TRADEMARK OFFICE

Commissioner for Patents
United States Patent and Trademark Office
P.O. Box 1450
Alexandria, VA 22313-1450
www.uspto.gov

MAILED

JUN 10 2011

OFFICE OF PETITIONS

Eran Eilat
Shderot Haarbaha 5 ½
Beit Shean
Israel

In re Application of
Eran EILAT et al.
Application No. 12/886,206
Filed: May 5, 2011
For: REGION OF INTEREST TRACKING AND INTEGRATION INTO A VIDEO CODEC

Dear Mr. Eilat:

You are named as the inventor in the above-identified United States patent application, filed under the provisions of 35 U.S.C. 116 (United States Code), and 37 CFR 1.47(b), Rules of Practice in Patent Cases. Should a patent be granted on the application you will be designated therein as the inventor.

As a named inventor you are entitled to inspect any paper in the file wrapper of the application, order copies of all or any part thereof (at a prepaid cost per 37 CFR 1.19) or make your position of record in the application. Alternatively, you may arrange to do any of the preceding through a registered patent attorney or agent presenting written authorization from you. If you care to join the application, counsel of record (see below) would presumably assist you. Joining the application would entail the filing of an appropriate oath or declaration by you pursuant to 37 CFR 1.63.

Telephone inquiries regarding this communication should be directed to Robert DeWitty at 001-(571) 272-8427. Requests for information regarding your application should be directed to the File Information Unit at 001-(703) 308-2733. Information regarding how to pay for and order a copy of the application, or a specific paper in the application, should be directed to the Certification Division at 001-(571) 272-3150.

David Bucci
Petitions Examiner
Office of Petitions

cc: **OHLANDT, GREELEY, RUGGIERO & PERLE, LLP**
ONE LANDMARK SQUARE, 10TH FLOOR
STAMFORD CT 06901

UNITED STATES PATENT AND TRADEMARK OFFICE

Commissioner for Patents
United States Patent and Trademark Office
P.O. Box 1450
Alexandria, VA 22313-1450
www.uspto.gov

MAILED

JUN 10 2011

OFFICE OF PETITIONS

Gershom Kutliroff
Hatamar 18
90433 Alon Shvut
Israel

In re Application of
Eran EILAT et al.
Application No. 12/886,206
Filed: May 5, 2011
For: REGION OF INTEREST TRACKING AND INTEGRATION INTO A VIDEO CODEC

Dear Mr. Kutliroff:

You are named as the inventor in the above-identified United States patent application, filed under the provisions of 35 U.S.C. 116 (United States Code), and 37 CFR 1.47(b), Rules of Practice in Patent Cases. Should a patent be granted on the application you will be designated therein as the inventor.

As a named inventor you are entitled to inspect any paper in the file wrapper of the application, order copies of all or any part thereof (at a prepaid cost per 37 CFR 1.19) or make your position of record in the application. Alternatively, you may arrange to do any of the preceding through a registered patent attorney or agent presenting written authorization from you. If you care to join the application, counsel of record (see below) would presumably assist you. Joining the application would entail the filing of an appropriate oath or declaration by you pursuant to 37 CFR 1.63.

Telephone inquiries regarding this communication should be directed to Robert DeWitty at 001-(571) 272-8427. Requests for information regarding your application should be directed to the File Information Unit at 001-(703) 308-2733. Information regarding how to pay for and order a copy of the application, or a specific paper in the application, should be directed to the Certification Division at 001-(571) 272-3150.

David Bucci
Petitions Examiner
Office of Petitions

cc: **OHLANDT, GREELEY, RUGGIERO & PERLE, LLP**
ONE LANDMARK SQUARE, 10TH FLOOR
STAMFORD CT 06901

UNITED STATES PATENT AND TRADEMARK OFFICE

Commissioner for Patents
United States Patent and Trademark Office
P.O. Box 1450
Alexandria, VA 22313-1450
www.uspto.gov

MAILED

JUN 10 2011

OFFICE OF PETITIONS

Shai Shimon Yagur
Melchet 68
61999 Tel Aviv
Israel

In re Application of
Eran EILAT et al.
Application No. 12/886,206
Filed: May 5, 2011
For: REGION OF INTEREST TRACKING AND INTEGRATION INTO A VIDEO CODEC

Dear Mr. Yagur:

You are named as the inventor in the above-identified United States patent application, filed under the provisions of 35 U.S.C. 116 (United States Code), and 37 CFR 1.47(b), Rules of Practice in Patent Cases. Should a patent be granted on the application you will be designated therein as the inventor.

As a named inventor you are entitled to inspect any paper in the file wrapper of the application, order copies of all or any part thereof (at a prepaid cost per 37 CFR 1.19) or make your position of record in the application. Alternatively, you may arrange to do any of the preceding through a registered patent attorney or agent presenting written authorization from you. If you care to join the application, counsel of record (see below) would presumably assist you. Joining the application would entail the filing of an appropriate oath or declaration by you pursuant to 37 CFR 1.63.

Telephone inquiries regarding this communication should be directed to Robert DeWitty at 001-(571) 272-8427. Requests for information regarding your application should be directed to the File Information Unit at 001-(703) 308-2733. Information regarding how to pay for and order a copy of the application, or a specific paper in the application, should be directed to the Certification Division at 001-(571) 272-3150.

David Bucci
Petitions Examiner
Office of Petitions

cc: **OHLANDT, GREELEY, RUGGIERO & PERLE, LLP**
ONE LANDMARK SQUARE, 10TH FLOOR
STAMFORD CT 06901

UNITED STATES PATENT AND TRADEMARK OFFICE

Commissioner for Patents
United States Patent and Trademark Office
P.O. Box 1450
Alexandria, VA 22313-1450
www.uspto.gov

MAILED

JUN 10 2011

OFFICE OF PETITIONS

Dagan Eshar
Totzeret Haaretz 16
67891 Tel Aviv
Israel

In re Application of
Eran EILAT et al.
Application No. 12/886,206
Filed: May 5, 2011
For: REGION OF INTEREST TRACKING AND INTEGRATION INTO A VIDEO CODEC

Dear Mr. Eshar:

You are named as the inventor in the above-identified United States patent application, filed under the provisions of 35 U.S.C. 116 (United States Code), and 37 CFR 1.47(b), Rules of Practice in Patent Cases. Should a patent be granted on the application you will be designated therein as the inventor.

As a named inventor you are entitled to inspect any paper in the file wrapper of the application, order copies of all or any part thereof (at a prepaid cost per 37 CFR 1.19) or make your position of record in the application. Alternatively, you may arrange to do any of the preceding through a registered patent attorney or agent presenting written authorization from you. If you care to join the application, counsel of record (see below) would presumably assist you. Joining the application would entail the filing of an appropriate oath or declaration by you pursuant to 37 CFR 1.63.

Telephone inquiries regarding this communication should be directed to Robert DeWitty at 001-(571) 272-8427. Requests for information regarding your application should be directed to the File Information Unit at 001-(703) 308-2733. Information regarding how to pay for and order a copy of the application, or a specific paper in the application, should be directed to the Certification Division at 001-(571) 272-3150.

David Bucci
Petitions Examiner
Office of Petitions

cc: **OHLANDT, GREELEY, RUGGIERO & PERLE, LLP**
ONE LANDMARK SQUARE, 10TH FLOOR
STAMFORD CT 06901

Filed Electronically on November 2, 2011

PATENT
Dkt. OKC02094.US

IN THE UNITED STATES PATENT AND TRADEMARK OFFICE

In re application of: **Guy Morrison**
Application No.: **12/886,207** Group No.: **1797**
Filed: **September 20, 2010** Examiner:
For: **DOWNHOLE GAS AND LIQUID SEPARATION**

Mail Stop Petition
Commissioner for Patents
P.O. Box 1450
Alexandria, VA 22313-1450

PETITION TO MAKE SPECIAL BECAUSE OF ENERGY
(37 C.F.R. § 1.102(c) and M.P.E.P. § 708.02 VI)

Applicant hereby petitions to make this application special because it is for an invention that both materially contributes to the development of energy resources (Category A) and to the more efficient utilization and conservation of energy resources (Category B).

The accompanying declaration by the Applicant explains how this invention contributes to the development of energy resources and to the more efficient utilization and conservation of energy resources.

No fee is required with this petition, in accordance with 37 C.F.R. § 1.102(c).

Respectfully submitted,

Date: 11/2/11

Randall K. McCarthy, Registration No. 39,297
Bill D. McCarthy, Registration No. 26,772
Fellers, Snider, Blankenship, Bailey & Tippens, PC
100 North Broadway, Suite 1700
Oklahoma City, OK 73102
Telephone: 405-232-0621
Fax: 405-232-9659
Customer No. 33900

Filed Electronically on November 2, 2011 *PATENT*
Dkt. OKC02094.US

IN THE UNITED STATES PATENT AND TRADEMARK OFFICE

In re application of: **Guy Morrison**
Application No.: **12/886,207** Group No.: **1797**
Filed: **September 20, 2010** Examiner:
For: **DOWNHOLE GAS AND LIQUID SEPARATION**

Mail Stop Petition
Commissioner for Patents
P.O. Box 1450
Alexandria, VA 22313-1450

DECLARATION IN SUPPORT OF PETITION TO MAKE SPECIAL BECAUSE OF ENERGY (37 C.F.R. § 1.102(c) and M.P.E.P. § 708.02 VI)

Sir:

I hereby declare as follows:

1. My name is Guy Morrison. I am the named inventor for U.S. Patent Application No. 12/886,207 (the "Present Application").

2. I have over 15 years of experience in the oil and gas industry. I consider myself to have at least an ordinary level of skill in the relevant art.

3. The subject matter of the Present Application is being successfully commercially exploited through my company, Legacy Separators LLC ("Legacy Separators"). Legacy Separators provides liquid/gas separation units constructed and operated in accordance with the Present Application. These units contribute to the development of energy resources and to the more efficient utilization and conservation of energy resources.

4. As can be seen from a review of the Present Application, my liquid/gas separation unit advantageously increases the production levels of both liquid hydrocarbons (oil) and natural gas from subterranean formations. The liquid/gas separation unit is configured for installation at the inlet of a submersible pump in a well extending into such a formation, and generally operates to increase both the amount of oil and the amount of natural gas that may be produced from the well each day. Because the unit is sized in relation to the pump, smaller and more energy efficient pumps can be used, further leading to conservation of energy resources.

5. In one exemplary oil well near Perkins, Oklahoma, prior to the installation of my unit the well used a 90 HP submersible pump and a two-stage liquid/gas separator assembly at the inlet of the pump configured in accordance with the prior art. This well was able to pump about 600 barrels per day (BPD) of liquid and about 500,000 cubic feet of gas per day (CFPD). The liquid primarily constituted water and oil, and the gas primarily constituted natural gas.

6. After pulling the string and replacing the old pump and the old liquid/gas separator assembly with a smaller, more efficient 30 HP submersible pump and my liquid/gas unit in accordance with the Present Application, we were able to immediately increase the production to about 750 BPD and about 2,000,000 CFD. This continued over a period of several months, after which the liquid output remained generally in this range and the gas output gradually reduced to around 1,000,000 CFPD.

7. I submit that this increase of 25% more liquid and 300% more gas demonstrates that my unit meets the requirements of contributing to the development of energy resources. Moreover, the use of the significantly smaller 30 HP motor over the previous 90 HP motor demonstrates that my unit meets the requirements of contributing to the better utilization and

conservation of energy resources, since significantly less energy was required to maintain operation of the pump.

8. Each well is different in its depth, liquid/gas mix, and so on, and therefore the amount of improvement in the production of oil and gas in response to the addition of my unit will vary from one well to the next. Nevertheless, my unit has been installed in over 200 different wells in numerous states including Oklahoma, Texas, New Mexico, North Dakota and Wyoming, and similar improvements in the production of oil and/or gas have been experienced in many of these wells. Except for new well installations, substantially all of these other installations had an existing prior art liquid/gas separator, and in substantially every one of these cases the installation of my unit led to significant improvements in liquid/gas production. As with the exemplary well discussed above, we downsized the existing pump in at least some of these applications, further leading to energy consumption savings.

9. Another advantage of my unit is enhanced reliability. Wells that formerly had to have the pumping string pulled and reconfigured on a regular basis due to wear and other effects have not had to do so with my unit at the same frequency, further enhancing the production of energy resources. In one example well, the existing pumping string had to be pulled about every two weeks to replace worn parts prior to the installation of my unit. After the installation of my unit, the well operated continuously for a period of months without the need to pull and repair the pumping string. This enhanced reliability provided by my unit further contributes to the production and development of oil and gas resources, since the amount of downtime can be reduced and the amount of time during which the well remains continuously operational can be increased.

10. My unit meets a long-felt need in the industry and has experienced significant commercial success. As noted above, a number of prior liquid/gas separator designs have been introduced into the industry in the past and these prior designs have not experienced anything like this level of success, despite great efforts on the part of many companies, including very large companies with significant resources, to do so. I have relocated to new facilities and am ramping up production to meet ongoing increases in demand. For these reasons, I respectfully request that the Present Application be granted special status and expedited to allowance.

11. I hereby state under penalty of perjury under the Laws of the United States of America that the foregoing statements are true and correct to the best of my knowledge and belief.

Respectfully submitted,

NOV-2-11

Guy Morrison
President, Legacy Separators LLC

UNITED STATES PATENT AND TRADEMARK OFFICE

UNITED STATES DEPARTMENT OF COMMERCE
United States Patent and Trademark Office
Address: COMMISSIONER FOR PATENTS
P.O. Box 1450
Alexandria, Virginia 22313-1450
www.uspto.gov

APPLICATION NO.	FILING DATE	FIRST NAMED INVENTOR	ATTORNEY DOCKET NO.	CONFIRMATION NO.
12/886,207	09/20/2010	Guy Morrison	OKC02094.US	1142

33900 7590 11/17/2011

FELLERS, SNIDER, BLANKENSHIP, BAILEY & TIPPENS, PC
100 NORTH BROADWAY
SUITE 1700
OKLAHOMA CITY, OK 73102-8820

EXAMINER	
HUTCHINS, CATHLEEN R	
ART UNIT	PAPER NUMBER
3672	
MAIL DATE	DELIVERY MODE
11/17/2011	PAPER

Please find below and/or attached an Office communication concerning this application or proceeding.

The time period for reply, if any, is set in the attached communication.

UNITED STATES PATENT AND TRADEMARK OFFICE

Commissioner for Patents
United States Patent and Trademark Office
P.O. Box 1450
Alexandria, VA 22313-1450
www.uspto.gov

11/17/2011

FELLERS, SNIDER, BLANKENSHIP, BAILEY & TIPPENS, PC
100 NORTH BROADWAY
SUITE 1700
OKLAHOMA CITY OK 73102-8820

In re Application of	:	
Morrison	:	DECISION ON PETITION
Application No. 12/886,207	:	TO MAKE SPECIAL UNDER
Filed: 9/20/2010	:	THE GREEN TECHNOLOGY
Attorney Docket No. **OKC02094.US**	:	PILOT PROGRAM

This is a decision on the petition under 37 CFR 1.102, filed 11/2/2011, to make the above-identified application special. It is noted that as of August 25, 2006, the Office revised the procedures for requesting expedited examination based on environmental quality (See Federal register: June 26, 2006; volume 71, number 122; pages 36323-36327). Accordingly, the instant petition will be treated as a request to make the above-identified application special under the pilot program for applications pertaining to Green Technologies as set forth in 74 Federal Register Notice 64666 (December 8, 2009) and amended by 75 Federal Register Notice 28554 (May 21, 2010) and 75 Federal Register Notice 69049 (November 10, 2010).

The petition is **DISMISSED**.

If reconsideration of this decision is desired, a petition for reconsideration must be filed within ONE (1) MONTH OR THIRTY (30) DAYS from the mail date of this decision, whichever is longer. No extension of this time limit can be granted under 37 CFR 1.136(a) or (b). The petition for reconsideration should include an exhaustive attempt to provide the lacking item(s) noted below, since, after a decision on the petition for reconsideration, no further reconsideration or review of the matter will be undertaken by the Director.

A grantable petition to make an application special under 37 CFR 1.102 and the pilot program as set forth in 74 FR 64666 must be directed to a nonprovisional application filed under 35 USC 111(a) or be a national stage entry under 35 USC 371, exclusive of any reissue applications.

In order to qualify for special status, the following requirements must be met. 1) The application must have no more than 3 independent claims and no more than 20 total claims. 2) The application must not contain any multiple dependent claims. 3) The petition must state the basis for seeking special status, i.e., the claimed invention either: A) materially enhances the quality of the environment or B) materially contributes to: i) the discovery or development of renewable energy resources, ii) the more efficient utilization and conservation of energy resources, or iii)

greenhouse gas emission reduction. 4) If the disclosure is not clear on its face that the claimed invention materially contributes under category (A) or (B), the petition must be accompanied by a statement by the applicant, assignee, or an attorney/agent registered to practice before the Office explaining how the materiality standard is met. 5) A statement that applicant will agree to make an election without traverse in a telephonic interview if a restriction requirement is made by the examiner. 6) The petition to make special must be filed electronically. 7) The petition must be filed at least one day prior to the date that a first Office Action appears in the Patent Application Information Retrieval (PAIR) system. 8) The petition must be accompanied by a request for early publication in compliance with 37 CFR 1.219 and include the publication fee as set forth in 37 CFR 1.18(d).

The requirement for a fee for consideration of the petition to make special for applications pertaining to Green Technologies has been waived.

The petition lacks item(s) 3, 4, 5 and 8.

In regard to item 3, petitioner should note that the instant petition fails to state the basis for the special status (i.e., whether the instant invention (1) materially enhances the quality of the environment or materially contributes to (2) development of renewable energy resources or energy conservation, or (3) greenhouse gas reduction) as required by sections II and III of the notice.

In regard to item 4, petitioner should note that the instant petition includes a statement identifying the basis for the special status (i.e., whether the instant invention (1) materially enhances the quality of the environment or materially contributes to (2) development of renewable energy resources or energy conservation, or (3) greenhouse gas reduction) as required by sections II and III of the notice. However, as stated in the notice, applicant must also provide a statement pertaining to the materiality standard if the application disclosure is not clear on its face as to the materiality of the basis for the special status of the invention. This petition lacks such a statement and it is not agreed that the application on its face meets that materiality standard.

In regard to item 5, petitioner should note that a statement has not been provided that states that applicant will agree to make an election without traverse in a telephonic interview if a restriction requirement is made by the examiner as required by the Notice. Accordingly, the petition cannot be granted without such a statement.

In regard to item 8, petitioner should note that since no request in compliance with 37 CFR 1.219 has been made for the early publication of the present application and the publication fee as set forth in 37 CFR 1.18(d) has not been received, the petition is dismissed.

Any reconsideration of this decision should be submitted through the USPTO electronic filing system, EFS-Web, and selecting the document description of "Petition for Green Tech Pilot" on the EFS-Web screen.

Telephone inquiries concerning this decision should be directed to Tom Dunn at 571-272-1171.

The application is being forwarded to the Technology Center Art Unit 3672 for action in its regular turn.

/Tom Dunn/

Tom Dunn
Quality Assurance Specialist
Technology Center 1700

UNITED STATES PATENT AND TRADEMARK OFFICE

Commissioner for Patents
United States Patent and Trademark Office
P.O. Box 1450
Alexandria, VA 22313-1450
www.uspto.gov

WESTERMAN, HATTORI, DANIELS & ADRIAN, LLP
1250 CONNECTICUT AVENUE, NW
SUITE 700
WASHINGTON DC 20036

MAILED
AUG 02 2011
OFFICE OF PETITIONS

In re Application of	:	
Chinone et al.	:	
Application No. 12/886,209	:	DECISION ON PETITION
Filed: September 20, 2010	:	
Attorney Docket No. 062222A	:	

This is a decision on the petition under the unintentional provisions of 37 CFR 1.137(b), filed July 13, 2011, to revive the above-identified application.

The petition is **GRANTED**.

The above-identified application became abandoned for failure to reply in a timely manner to the Notice of Non-Compliant Amendment mailed October 21, 2010, which set a period for reply of one (1) month or thirty (30) days, whichever is longer. No extensions of time under the provisions of 37 CFR 1.136(a) were obtained. Accordingly, the above-identified application became abandoned on November 23, 2010.

The petition satisfies the requirements of 37 CFR 1.137(b) in that petitioner has supplied (1) the reply in the form of an Amendment; (2) the petition fee of $1,620.00 and (3) a proper statement of unintentional delay.

Telephone inquiries concerning this decision should be directed to the undersigned at (571) 272-7751.

The application file is being referred to Technology Center AU 1731 for appropriate action on the amendment filed with the instant petition.

/Joan Olszewski/
Joan Olszewski
Petitions Examiner
Office of Petitions

UNITED STATES PATENT AND TRADEMARK OFFICE

UNITED STATES DEPARTMENT OF COMMERCE
United States Patent and Trademark Office
Address: COMMISSIONER FOR PATENTS
P.O. Box 1450
Alexandria, Virginia 22313-1450
www.uspto.gov

APPLICATION NO.	FILING DATE	FIRST NAMED INVENTOR	ATTORNEY DOCKET NO.	CONFIRMATION NO.
12/886,227	09/20/2010	Young Ho YOO	4900-0048	1186

22429 7590 11/09/2010

LOWE HAUPTMAN HAM & BERNER, LLP
1700 DIAGONAL ROAD
SUITE 300
ALEXANDRIA, VA 22314

EXAMINER	
ART UNIT	PAPER NUMBER
2821	

MAIL DATE	DELIVERY MODE
11/09/2010	PAPER

Please find below and/or attached an Office communication concerning this application or proceeding.

The time period for reply, if any, is set in the attached communication.

UNITED STATES PATENT AND TRADEMARK OFFICE

Commissioner for Patents
United States Patent and Trademark Office
P.O. Box 1450
Alexandria, VA 22313-1450
www.uspto.gov

LOWE HAUPTMAN HAM & BERNER, LLP
1700 DIAGONAL ROAD
SUITE 300
ALEXANDRIA VA 22314

In re Application of	**: DECISION ON REQUEST TO**
Young Ho YOO	**: PARTICIPATE IN THE PATENT**
Application No.: 12/886,227	**: PROSECUTION HIGHWAY**
Filed: 20 September 2010	**: PROGRAM AND PETITION**
Attorney Docket No.: 4900-0048	**: TO MAKE SPECIAL UNDER**
For: LED LAMP	**: 37 CFR 1.102(d)**

This is a decision on the request to participate in the Patent Prosecution Highway (PPH) program and the petition under 37 CFR 1.102(a), filed 20 September 2010, to make the above-identified application special.

The request and petition are **DISMISSED**.

Discussion

A grantable request to participate in the PPH program and petition to make special require:

1. The U.S. application is

   a. a Paris Convention application which either
      i. validly claims priority under 35 U.S.C. 119(a) and 37 CFR 1.55 to one or more applications filed in the KIPO, or
      ii. validly claims priority under 35 U.S.C. 119(a)/365(a) to a PCT application that contains no priority claims,

   or

   b. a national stage application under the PCT (an application which entered the national stage in the U.S. from a PCT international application after compliance with 35 U.S.C. 371), which PCT application
      i. validly claims priority under 35 U.S.C. 365(b) to an application filed in the KIPO, or
      ii. validly claims priority under 35 U.S.C. 365(b) to a PCT application that contains no priority claims, or
      iii. contains no priority claim,

   or

c. a so-called bypass application filed under 35 U.S.C. 111(a) which validly claims benefit under 35 U.S.C. 120 to a PCT application, which PCT application
    i. validly claims priority under 35 U.S.C. 365(b) to an application filed in the KIPO, or
    ii. validly claims priority under 35 U.S.C. 365(b) to a PCT application that contains no priority claims, or
    iii. contains no priority claim;

2. Applicant must submit a copy of:
    a. The allowable/patentable claim(s) from the KR application(s);
    b. An English translation of the allowable/patentable claim(s), and
    c. A statement that the English translation is accurate (if the claims were published in a language other than English);
3. Applicant must:
    a. Ensure that all the claims in the U.S. application must sufficiently correspond or be amended to sufficiently correspond to the allowable/patentable claim(s) in the KR application(s), and
    b. Submit a claims correspondence table in English;
4. Examination of the U.S. application has not begun;
5. Applicant must submit:
    a. A copy of all the office actions (which are relevant to patentability), excluding "Decision to Grant a Patent" from each of the KR application(s) containing the allowable/patentable claim(s);
    b. An English language translation of the KIPO office action; and
    c. A statement that the English translation is accurate (if the office actions are not in the English language);
6. Applicant must submit:
    a. An IDS listing the documents cited by the KIPO examiner in the KIPO office action (unless already filed in this application); and
    b. Copies of all the documents cited in the KIPO office action, except U.S. patents or U.S. patent application publications (unless already filed in this application);

This request to participate in the PPH program and petition is assessed as follows:

Requirements 1 and 4-6 above are considered to have been met.
However the request to participate in the PPH program fails to meet requirements 2.

Regarding requirement 2, applicant has failed to submit an English translation of the allowable/patentable claims from the Korean application.

Regarding requirement 3, it can not be determined if the claims sufficiently correspond since the English translation of the allowable/patentable claims was not submitted.

Applicant is given **ONE** opportunity within a time period of **ONE MONTH or THIRTY DAYS**, whichever is longer, from the mailing date of this decision to correct the deficiencies.

NO EXTENSION OF TIME UNDER 37 CFR 1.136 IS PERMITTED. If the deficiencies are not corrected with the time period given, the application will await action in its regular turn.

Response must be filed via the Electronic Filing System (EFS) with the Document Code PPH.PET.652. Any preliminary amendments and IDS submitted with the PPH documents must be separately indexed as a preliminary amendment and IDS, respectively.

Telephone inquiries concerning this decision should be directed to Lee W. Young at (571) 272-4549.

All other inquiries concerning the examination or status of the application is accessible in the PAIR system at http://www.uspto.gov/ebc.index.html.

Lee W. Young
TQAS
Technology Center 2800 – Semiconductors
Electrical & Optical Systems & Components

UNITED STATES PATENT AND TRADEMARK OFFICE

UNITED STATES DEPARTMENT OF COMMERCE
United States Patent and Trademark Office
Address: COMMISSIONER FOR PATENTS
P.O. Box 1450
Alexandria, Virginia 22313-1450
www.uspto.gov

APPLICATION NO.	FILING DATE	FIRST NAMED INVENTOR	ATTORNEY DOCKET NO.	CONFIRMATION NO.
12/886,227	09/20/2010	Young Ho YOO	4900-0048	1186

22429 7590 12/14/2010

LOWE HAUPTMAN HAM & BERNER, LLP
1700 DIAGONAL ROAD
SUITE 300
ALEXANDRIA, VA 22314

EXAMINER	
ART UNIT	PAPER NUMBER
2821	

MAIL DATE	DELIVERY MODE
12/14/2010	PAPER

Please find below and/or attached an Office communication concerning this application or proceeding.

The time period for reply, if any, is set in the attached communication.

UNITED STATES PATENT AND TRADEMARK OFFICE

Commissioner for Patents
United States Patent and Trademark Office
P.O. Box 1450
Alexandria, VA 22313-1450
www.uspto.gov

LOWE HAUPTMAN HAM & BERNER, LLP
1700 DIAGONAL ROAD
SUITE 300
ALEXANDRIA VA 22314

In re Application of	**: DECISION ON REQUEST TO**
Young Ho YOO	**: PARTICIPATE IN THE PATENT**
Application No.: 12/886,227	**: PROSECUTION HIGHWAY**
Filed: 20 September 2010	**: PROGRAM AND PETITION**
Attorney Docket No.: 4900-0048	**: TO MAKE SPECIAL UNDER**
For: LED LAMP	**: 37 CFR 1.102(a)**

This is a decision on the request to participate in the Patent Prosecution Highway (PPH) program and the petition under 37 CFR 1.102(a), filed 20 September 2010 and renewed on 17 November 2010, to make the above-identified application special.

The request and petition are **GRANTED**.

Discussion

A grantable request to participate in the PPH program and petition to make special require:

1. The U.S. application is

   a. a Paris Convention application which either
      i. validly claims priority under 35 U.S.C. 119(a) and 37 CFR 1.55 to one or more applications filed in the KIPO, or
      ii. validly claims priority under 35 U.S.C. 119(a)/365(a) to a PCT application that contains no priority claims,

   or

   b. a national stage application under the PCT (an application which entered the national stage in the U.S. from a PCT international application after compliance with 35 U.S.C. 371), which PCT application
      i. validly claims priority under 35 U.S.C. 365(b) to an application filed in the KIPO, or
      ii. validly claims priority under 35 U.S.C. 365(b) to a PCT application that contains no priority claims, or
      iii. contains no priority claim,

   or

   c. a so-called bypass application filed under 35 U.S.C. 111(a) which validly claims benefit under 35 U.S.C. 120 to a PCT application, which PCT application

i. validly claims priority under 35 U.S.C. 365(b) to an application filed in the KIPO, or
ii. validly claims priority under 35 U.S.C. 365(b) to a PCT application that contains no priority claims, or
iii. contains no priority claim;

2. Applicant must submit a copy of:
   a. The allowable/patentable claim(s) from the KR application(s);
   b. An English translation of the allowable/patentable claim(s), and
   c. A statement that the English translation is accurate (if the claims were published in a language other than English);
3. Applicant must:
   a. Ensure that all the claims in the U.S. application must sufficiently correspond or be amended to sufficiently correspond to the allowable/patentable claim(s) in the KR application(s), and
   b. Submit a claims correspondence table in English;
4. Examination of the U.S. application has not begun;
5. Applicant must submit:
   a. A copy of all the office actions (which are relevant to patentability), excluding "Decision to Grant a Patent" from each of the KR application(s) containing the allowable/patentable claim(s);
   b. An English language translation of the KIPO office action; and
   c. A statement that the English translation is accurate (if the office actions are not in the English language);
6. Applicant must submit:
   a. An IDS listing the documents cited by the KIPO examiner in the KIPO office action (unless already filed in this application); and
   b. Copies of all the documents cited in the KIPO office action, except U.S. patents or U.S. patent application publications (unless already filed in this application);

The request to participate in the PPH program and petition comply with the above requirements. Accordingly, the above-identified application has been accorded "special" status.

Any response must be submitted via EFS-Web.

Telephone inquiries concerning this decision should be directed to Lee W. Young at 571-272-4549.

All other inquiries concerning the examination or status of the application is accessible in the PAIR system at http://uspto.gov/ebc/index.html.

Lee W. Young
TQAS
Technology Center 2800

UNITED STATES PATENT AND TRADEMARK OFFICE

Commissioner for Patents
United States Patent and Trademark Office
P.O. Box 1450
Alexandria, VA 22313-1450
www.uspto.gov

JONES, WALKER, WAECHTER,
POITEVENT, CARRERE
& DENEGRE, L.L.P.
5TH FLOOR, FOUR UNITED PLAZA
8555 UNITED PLAZA BOULEVARD
BATON ROUGE, LA 70809

MAILED
MAR 30 2012
OFFICE OF PETITIONS

In re Application of
Murray Gerwing, et al.
Application No.: 12/886,246
Filed: 20 September 2010
Attorney Docket No.: 16342/115222-01
For: INTERNALLY RETAINED JAW ROLLER PIN

: DECISION ON REQUEST TO
: PARTICIPATE IN THE PATENT
: PROSECUTION HIGHWAY
: PROGRAM AND PETITION
: TO MAKE SPECIAL UNDER
: 37 CFR 1.102(a)
:

This is a decision on the request to participate in the Patent Prosecution Highway (PPH) program and the petition under 37 CFR 1.102(a), filed 31 January 2012, to make the above-identified application special.

There is no indication that the petition is signed by a registered patent attorney or patent agent of record. However, in accordance with 37 CFR 1.34, the signature of Mr. Micah J. Fincher appearing on the correspondence shall constitute a representation to the United States Patent and Trademark Office that he is authorized to represent the particular party in whose behalf he acts.

The request and petition are **GRANTED**.

DISCUSSION

A grantable request to participate in the PPH pilot program and petition to make special require:

(1) The U.S. application is

a. a Paris Convention application which either
   i. validly claims priority under 35 U.S.C. 119(a) and 37 CFR 1.55 to one or more applications filed in the UK IPO, or
   ii. validly claims priority to a PCT application that contains no priority claims, or

b. a national stage application under the PCT (an application which entered the national stage in the U.S. from a PCT international application after compliance with 35 U.S.C. 371), which PCT application
   i. validly claims priority to an application filed in the UK IPO, or
   ii. validly claims priority to a PCT application that contains no priority claims, or
   iii. contains no priority claim, or
c. a so-called bypass application filed under 35 U.S.C. 111(a) which validly claims benefit under 35 U.S.C. 120 to a PCT application, which PCT application
   i. validly claims priority to an application filed in the UK IPO, or
   ii. validly claims priority to a PCT application that contains no priority claims, or
   iii. contains no priority claim;

(2) Applicant must:

a. Ensure all the claims in the U.S. application must sufficiently correspond or be amended to sufficiently correspond to the allowable/patentable claim(s) in the UK IPO application(s) and
b. Submit a claims correspondence table in English;

(3) Examination of the U.S. application has not begun;

(4) Applicant must submit:

a. Documentation of prior office action:
   i. a copy of the office action(s) just prior to the "Decision to Grant a Patent" from each of the UK IPO application(s) containing the allowable/patentable claim(s) or
   ii. if the allowable/patentable claims(s) are from a "Notification of Reasons for Refusal" then the Notification of Reasons for Refusal or
   iii. if the UK IPO application is a first action allowance then no office action from the UK IPO is necessary should be indicated on the request/petition form;
b. An English language translation of the UK IPO Office action from (5)(a)(i)-(ii) above

(5) Applicant must submit:

a. An IDS listing the documents cited by the UK IPO examiner in the UK IPO office action (unless already submitted in this application)
b. Copies of the documents except U.S. patents or U.S. patent application publications (unless already submitted in this application);

The request to participate in the PPH pilot program and petition comply with the above requirements. Accordingly, the above-identified application has been accorded "special" status.

Telephone inquiries concerning this decision should be directed to the undersigned at (571) 272-3204.

All other inquiries concerning the examination or status of the application is accessible in the PAIR system at http://www.uspto.gov/ebc.index.html.

This application will be forwarded to the examiner for action on the merits commensurate with this decision.

/SDB/

Sherry D. Brinkley
Petitions Examiner
Office of Petitions

UNITED STATES PATENT AND TRADEMARK OFFICE

UNITED STATES DEPARTMENT OF COMMERCE
United States Patent and Trademark Office
Address: COMMISSIONER FOR PATENTS
P.O. Box 1450
Alexandria, Virginia 22313-1450
www.uspto.gov

APPLICATION NO.	FILING DATE	FIRST NAMED INVENTOR	ATTORNEY DOCKET NO.	CONFIRMATION NO.
12/886,266	09/20/2010	Tomoko KITAMURA	SUTOSH.681AUS	1250

7590 07/20/2011

KNOBBE MARTENS OLSON & BEAR LLP
2040 MAIN STREET
FOURTEENTH FLOOR
IRVINE, CA 92614

EXAMINER	
WILLIS, TREMESHA S	

ART UNIT	PAPER NUMBER
2835	

NOTIFICATION DATE	DELIVERY MODE
07/20/2011	ELECTRONIC

DECISION GRANTING PETITION UNDER 37 CFR 1.138(d)

The declaration of express abandonment is recognized

This is in response to the petition under 37 CFR 1.138(d), requesting for a refund of any previously paid search fee and excess claims fee in the above-identified application.

The petition is granted.

The express abandonment is recognized. Any previously paid search fee and excess claims fee are hereby refunded.

Telephone inquiries should be directed to the Office of Data Management at (571) 272-4200.

Patent Publication Branch
Office of Data Management

Doc Code: PPH.PCT.652
Document Description: Petition to make special under PCT-Patent Pros Hwy

PTO/SB/20PCT-KR (06-10)
Approved for use through 01/31/2012. OMB 0651-0058
U.S. Patent and Trademark Office; U. S. DEPARTMENT OF COMMERCE
Under the Paperwork Reduction Act of 1995, no persons are required to respond to a collection of information unless it displays a valid OMB control number.

REQUEST FOR PARTICIPATION IN THE PATENT COOPERATION TREATY - PATENT PROSECUTION HIGHWAY (PCT-PPH) PILOT PROGRAM BETWEEN THE KOREAN INTELLECTUAL PROPERTY OFFICE (KIPO) AND THE USPTO

Application No:	12/886,270	Filing date:	20 September 2010
First Named Inventor:	Jay O'Brien		
Title of the Invention:	PROCESS MANAGEMENT SYSTEM AND METHOD		

THIS REQUEST FOR PARTICIPATION IN THE PCT-PPH PILOT PROGRAM ALONG WITH THE REQUIRED DOCUMENTS MUST BE SUBMITTED VIA EFS-WEB. INFORMATION REGARDING EFS-WEB IS AVAILABLE AT HTTP://WWW.USPTO.GOV/EBC/EFS_HELP.HTML

APPLICANT HEREBY REQUESTS PARTICIPATION IN THE PCT-PPH PROGRAM AND PETITIONS TO MAKE THE ABOVE-IDENTIFIED APPLICATION SPECIAL UNDER THE PCT-PPH PROGRAM.

The above-identified application is (1) a national stage entry of the corresponding PCT application, or (2) a national stage entry of another PCT application which claims priority to the corresponding PCT application, or (3) a national application that claims domestic/ foreign priority to the corresponding PCT application, or (4) a national application which forms the basis for the priority claim in the corresponding PCT application, or (5) a continuing application of a U.S. application that satisfies one of (1) to (4) above, or (6) a U.S. application that claims domestic benefit to a U.S. provisional application which forms the basis for the priority claim in the corresponding PCT application.

The corresponding PCT application number(s) is/are: PCT/US2010/049801

The international date of the corresponding PCT application(s) is/are: 22 September 2010

I. List of Required Documents:

a. **A copy of the latest international work product (WO/ISA, WO/IPEA, or IPER) in the above–identified corresponding PCT application(s)**

☐ Is attached.

☒ Is not attached because the document is already in the U.S. application.

b. **A copy of all claims which were indicated as having novelty, inventive step and industrial applicability in the above-identified corresponding PCT application(s).**

☒ Is attached.

☐ Is not attached because the document is already in the U.S. application.

c. **English translations of the documents in a. and b. above are attached (if the documents are not in the English language). A statement that the English translation is accurate is attached for the document in b. above.**

This collection of information is required by 35 U.S.C. 119, 37 CFR 1.55, and 37 CFR 1.102(d). The information is required to obtain or retain a benefit by the public, which is to file (and by the USPTO to process) an application. Confidentiality is governed by 35 U.S.C. 122 and 37 CFR 1.11 and 1.14. This collection is estimated to take 2 hours to complete, including gathering, preparing, and submitting the completed application form to the USPTO. Time will vary depending upon the individual case. Any comments on the amount of time you require to complete this form and/or suggestions for reducing this burden should be sent to the Chief Information Officer, U.S. Patent and Trademark Office, U.S. Department of Commerce, P.O. Box 1450, Alexandria, VA 22313-1450. DO NOT SEND FEES OR COMPLETED FORMS TO THIS ADDRESS.

PTO/SB/20PCT-KR (06-10)
Approved for use through 01/31/2012. OMB 0651-0058
U.S.Patent and Trademark Office; U.S. DEPARTMENT OF COMMERCE
Under the Paperwork Reduction Act of 1995, no persons are required to respond to a collection of information unless it displays a valid OMB control number.

REQUEST FOR PARTICIPATION IN THE PCT-PPH PILOT PROGRAM BETWEEN THE KIPO AND THE USPTO

(continued)

Application No.:	12/886,270
First Named Inventor:	Jay O'Brien

d. **(1) An information disclosure statement listing the documents cited in the international work products (ISR, WO/ISA, WO/IPEA, IPER) of the corresponding PCT application.**

☐ Is attached

☒ Has already been filed in the above-identified U.S. application on 19 July 2011

(2) Copies of all documents (except) for U.S. patents or U.S. patent application publications)

☒ Are attached.

Have already been filed in the above-identified U.S. application on 19 July 2011

II. Claims Correspondence Table:

Claims in US Application	Patentable Claims in the corresponding PCT Application	Explanation regarding the correspondence
1-48	1-48	same claims

III. All the claims in the US application sufficiently correspond to the patentable claims in the corresponding PCT application.

Signature /Katherine Proctor/	Date August 24, 2011
Name (Print/Typed) Katherine Proctor	Registration Number 31468

Privacy Act Statement

The **Privacy Act of 1974 (P.L. 93-579)** requires that you be given certain information in connection with your submission of the attached form related to a patent application or patent. Accordingly, pursuant to the requirements of the Act, please be advised that: (1) the general authority for the collection of this information is 35 U.S.C. 2(b)(2); (2) furnishing of the information solicited is voluntary; and (3) the principal purpose for which the information is used by the U.S. Patent and Trademark Office is to process and/or examine your submission related to a patent application or patent. If you do not furnish the requested information, the U.S. Patent and Trademark Office may not be able to process and/or examine your submission, which may result in termination of proceedings or abandonment of the application or expiration of the patent.

The information provided by you in this form will be subject to the following routine uses:

1. The information on this form will be treated confidentially to the extent allowed under the Freedom of Information Act (5 U.S.C. 552) and the Privacy Act (5 U.S.C 552a). Records from this system of records may be disclosed to the Department of Justice to determine whether disclosure of these records is required by the Freedom of Information Act.
2. A record from this system of records may be disclosed, as a routine use, in the course of presenting evidence to a court, magistrate, or administrative tribunal, including disclosures to opposing counsel in the course of settlement negotiations.
3. A record in this system of records may be disclosed, as a routine use, to a Member of Congress submitting a request involving an individual, to whom the record pertains, when the individual has requested assistance from the Member with respect to the subject matter of the record.
4. A record in this system of records may be disclosed, as a routine use, to a contractor of the Agency having need for the information in order to perform a contract. Recipients of information shall be required to comply with the requirements of the Privacy Act of 1974, as amended, pursuant to 5 U.S.C. 552a(m).
5. A record related to an International Application filed under the Patent Cooperation Treaty in this system of records may be disclosed, as a routine use, to the International Bureau of the World Intellectual Property Organization, pursuant to the Patent Cooperation Treaty.
6. A record in this system of records may be disclosed, as a routine use, to another federal agency for purposes of National Security review (35 U.S.C. 181) and for review pursuant to the Atomic Energy Act (42 U.S.C. 218(c)).
7. A record from this system of records may be disclosed, as a routine use, to the Administrator, General Services, or his/her designee, during an inspection of records conducted by GSA as part of that agency's responsibility to recommend improvements in records management practices and programs, under authority of 44 U.S.C. 2904 and 2906. Such disclosure shall be made in accordance with the GSA regulations governing inspection of records for this purpose, and any other relevant (*i.e.*, GSA or Commerce) directive. Such disclosure shall not be used to make determinations about individuals.
8. A record from this system of records may be disclosed, as a routine use, to the public after either publication of the application pursuant to 35 U.S.C. 122(b) or issuance of a patent pursuant to 35 U.S.C. 151. Further, a record may be disclosed, subject to the limitations of 37 CFR 1.14, as a routine use, to the public if the record was filed in an application which became abandoned or in which the proceedings were terminated and which application is referenced by either a published application, an application open to public inspection or an issued patent.
9. A record from this system of records may be disclosed, as a routine use, to a Federal, State, or local law enforcement agency, if the USPTO becomes aware of a violation or potential violation of law or regulation.

UNITED STATES PATENT AND TRADEMARK OFFICE

Commissioner for Patents
United States Patent and Trademark Office
P.O. Box 1450
Alexandria, VA 22313-1450
www.uspto.gov

PROCOPIO, CORY, HARGREAVES & SAVITCH LLP
525 B STREET
SUITE 2200
SAN DIEGO CA 92101

MAILED
JAN 11 2012
OFFICE OF PETITIONS

In re Application of:	: DECISION ON REQUEST TO
O'Brien et al.	: PARTICIPATE IN THE PATENT
Application No. 12/886,270	: PROSECUTION HIGHWAY
Filed: September 20, 2010	: PROGRAM AND PETITION
Attorney Docket No. 116630-001UTL	: TO MAKE SPECIAL UNDER
	: 37 CFR 1.102(a)

This is a decision on the request to participate in the PCT Patent Prosecution Highway (PCT-PPH) pilot program and the petition under 37 CFR 1.102(a), filed on August 25, 2011 to make the above-identified application special.

The request and petition are **GRANTED**.

Discussion

A grantable request to participate in the PCT-PPH pilot program and petition to make special require:

(1) The U.S. application must have an eligible relationship to one or more PCT applications where the ISA or IPEA are the JPO, EPO, KIPO, NPI, NBPR, or USPTO;

(2) At least one claim in the PCT application has novelty, inventive step, and industrial applicability and must be free of any observations in Box VIII in the latest work product in the international stage or applicant must identify and explain why the claim(s) is/are not subject to the observation in Box VIII;

(3) Applicant must submit a copy of the claim(s) from the PCT application(s) that have novelty, inventive step, and industrial applicability along with an English translation thereof and a statement that the English translation is accurate, if the claims are not in the English language;

(4) All the claims in the U.S. application must sufficiently correspond or be amended to sufficiently correspond to the claim(s) that have novelty, inventive step, and industrial applicability in the PCT application(s);

(5) Examination of the U.S. application has not begun;

(6) Applicant must submit a copy of the latest international work product from the PCT application indicating that the claim(s) have novelty, inventive step, and industrial applicability along with an English translation thereof and a statement that the English translation is accurate if the latest international work product is not in the English language;

(7) Applicant must submit an IDS listing the documents cited by the PCT examiner in the international work product along with copies of documents except U.S. patents or U.S. patent application publications.

The request to participate in the PCT-PPH pilot program and petition comply with the above requirements. Accordingly, the above-identified application has been accorded "special" status.

Telephone inquiries concerning this decision should be directed to Joan Olszewski at 571-272-7751.

All other inquiries concerning the examination or status of the application is accessible in the PAIR system at http://www.uspto.gov/ebc.index.html.

This application will be forwarded to the examiner for action on the merits commensurate with this decision once this application's formality reviews have been completed.

/dab/
David Bucci
Petitions Examiner
Office of Petitions

UNITED STATES PATENT AND TRADEMARK OFFICE

Commissioner for Patents
United States Patent and Trademark Office
P.O. Box 1450
Alexandria, VA 22313-1450
www.uspto.gov

3M INNOVATIVE
PROPERTIES COMPANY
PO BOX 33427
ST. PAUL MN 55133-3427

MAILED
FEB 22 2012
OFFICE OF PETITIONS

In re Application of :
Johnson, et al :
Application No. 12/886,282 : DECISION
Filed/Deposited: 20 September, 2010 :
Attorney Docket No. 57831US013 :

This is a decision on the papers filed on 30 January, 2012, considered as a petition pursuant to 37 C.F.R. §1.181 (no fee) requesting withdrawal of the holding of abandonment in the above-identified application.

The petition pursuant to 37 C.F.R. §1.181 is **DISMISSED**.

Any request for reconsideration of this decision must be submitted within TWO (2) MONTHS from the mail date of this decision. Extensions of time under 37 C.F.R. §1.136(a) are permitted. The reconsideration request should include a cover letter entitled "Renewed Petition pursuant to 37 C.F.R. §1.181."

This is **not** a final agency action within the meaning of 5 U.S.C. §704.

As to the Request to Withdraw
the Holding of Abandonment

Petitioners always are directed to the Commentary at MPEP §711.03(c)(I) for guidance as to the proper showing requirements for relief pursuant to 37 C.F.R. §1.181.

Petitioner appears not to comply with the guidance in the Commentary at MPEP §711.03(c)(I)—as discussed below, Petitioner has failed to satisfy the showing requirements set forth there. Petitioner may find it beneficial to review that material and move step-wise through that guidance in the effort to satisfy the showing requirements (statements and supporting documentation).

BACKGROUND

The record reflects as follows:

Petitioner failed to reply timely and properly to the non-final Office action mailed on 9 May, 2011, with reply due absent extension of time (request and fee) on or before 9 August, 2011.

The application went abandoned by operation of law after midnight 9 August, 2011.

The Office mailed the Notice of Abandonment on 30 December, 2011.

On 30 January, 2011, Petitioner submitted a petition pursuant to 37 C.F.R. §1.181 to withdraw the holding of abandonment, and averred timely reply on 26 May, 2011, with a terminal disclaimer and fee, however, Petitioner had no authority to sign the TD, and so it was rejected. Petitioner is reminded that reply must be timely and proper. The Rules of Practice and the guidance in Commentary in the MPEP provide protections and benefits for applicants and practitioners, however, those protections and benefits are unavailable when those rules are not complied with/followed. Thus, Petitioner failed to comply with the showing requirements under the Rule.

With regard to Petitioner's request to withdraw the holding of abandonment pursuant to 37 C.F.R. §1.181, the guidance in the Commentary at MPEP §711.03(c)(I) provides in pertinent part as to nonreceipt:

***

> The showing required to establish nonreceipt of an Office communication must include a statement from the practitioner describing the system used for recording an Office action received at the correspondence address of record with the USPTO. The statement should establish that the docketing system is sufficiently reliable. It is expected that the record would include, but not be limited to, the application number, attorney docket number, the mail date of the Office action and the due date for the response.
>
> Practitioner must state that the Office action was not received at the correspondence address of record, and that a search of the practitioner's record(s), including any file jacket or the equivalent, and the application contents, indicates that the Office action was not received. A copy of the record(s) used by the practitioner where the non-received Office action would have been entered had it been received is required.
>
> A copy of the practitioner's record(s) required to show non-receipt of the Office action should include the master docket for the firm. That is, if a three month period for reply was set in the nonreceived Office action, a copy of the master docket report showing all replies docketed for a date three months from the mail date of the nonreceived Office action must be submitted as documentary proof of nonreceipt of the Office action. If no

such master docket exists, the practitioner should so state and provide other evidence such as, but not limited to, the following: the application file jacket; incoming mail log; calendar; reminder system; or the individual docket record for the application in question.[1]

***

With regard to Petitioner's request to withdraw the holding of abandonment pursuant to 37 C.F.R. §1.181, the guidance in the Commentary at MPEP §711.03(c)(I) provides in pertinent part as to timely fling:

***

37 C.F.R. §1.10(c) through §1.10(e) and §1.10(g) set forth procedures for petitioning the Director of the USPTO to accord a filing date to correspondence as of the date of deposit of the correspondence as "Express Mail." A petition to withdraw the holding of abandonment relying upon a timely reply placed in "Express Mail" must include an appropriate petition under 37 C.F.R. §1.10(c), (d), (e), or (g) (see MPEP §513). When a paper is shown to have been mailed to the Office using the "Express Mail" procedures, the paper must be entered in PALM with the "Express Mail" date.

Similarly, applicants may establish that a reply was filed with a postcard receipt that properly identifies the reply and provides *prima facie* evidence that the reply was timely filed. See MPEP §503. For example, if the application has been held abandoned for failure to file a reply to a first Office action, and applicant has a postcard receipt showing that an amendment was timely filed in response to the Office action, then the holding of abandonment should be withdrawn upon the filing of a petition to withdraw the holding of abandonment. When the reply is shown to have been timely filed based on a postcard receipt, the reply must be entered into PALM using the date of receipt of the reply as shown on the post card receipt.

Where a certificate of mailing under 37 C.F.R. §1.8, but not a postcard receipt, is relied upon in a petition to withdraw the holding of abandonment, see 37 C.F.R. 1.8(b) and MPEP §512. As stated in 37 C.F.R. §1.8(b)(3) the statement that attests to the previous timely mailing or transmission of the correspondence must be on a personal knowledge basis, or to the satisfaction of the Director of the USPTO. If the statement attesting to the previous timely mailing is not made by the person who signed the Certificate of Mailing (i.e., there is no personal knowledge basis), then the statement attesting to the previous timely mailing should include evidence that supports the conclusion that the correspondence was actually mailed (e.g., copies of a mailing log establishing that correspondence was mailed for that application). When the correspondence is shown to have been timely filed based on a certificate of mailing, the correspondence is entered

[1] *See*: MPEP §711.03(c) (I)(A).

into PALM with the actual date of receipt (i.e., the date that the duplicate copy of the papers was filed with the statement under 37 C.F.R. §1.8).

37 C.F.R. §1.8(b) also permits applicant to notify the Office of a previous mailing or transmission of correspondence and submit a statement under 37 C.F.R. §1.8(b)(3) accompanied by a duplicate copy of the correspondence when a reasonable amount of time (e.g., more than one month) has elapsed from the time of mailing or transmitting of the correspondence. Applicant does not have to wait until the application becomes abandoned before notifying the Office of the previous mailing or transmission of the correspondence. Applicant should check the private Patent Application Information Retrieval (PAIR) system for the status of the correspondence before notifying the Office. See MPEP §512. [2]

***

A Petitioner unable to comply with and/or otherwise satisfy these requirements may wish to revive the application: Petitioner may wish to properly file a petition to the Commissioner requesting revival of an application abandoned due to unintentional delay under 37 C.F.R. §1.137(b). (See: http://www.uspto.gov/web/offices/pac/mpep/documents/0700_711_03_c.htm#sect711.03c)

Out of an abundance of caution, Petitioners always are reminded that the filing of a petition under 37 C.F.R. §1.181 does not toll any periods that may be running any action by the Office and a petition seeking relief under the regulation must be filed within two (2) months of the act complained of (*see*: 37 C.F.R. §1.181(f)), and those registered to practice and all others who make representations before the Office **must** inquire into the underlying facts of representations made to the Office and support averments with the appropriate documentation–since all owe to the Office the continuing duty to disclose.[3]

The availability of applications and application papers online to applicants/practitioners who diligently associate their Customer Number with the respective application(s) now provides an applicant/practitioner on-demand information as to events/transactions in an application.

STATUTES, REGULATIONS

Congress has authorized the Commissioner to "revive an application if the delay is shown to the satisfaction of the Commissioner to have been "unavoidable." 35 U.S.C. §133 (1994). And the

---

[2] *See*: MPEP §711.03(c) (I)(B).

[3] See supplement of 17 June, 1999. The Patent and Trademark Office is relying on Petitioner's duty of candor and good faith and accepting a statement made by Petitioner. See Changes to Patent Practice and Procedure, 62 Fed. Reg. at 53160 and 53178, 1203 Off. Gaz. Pat. Office at 88 and 103 (responses to comments 64 and 109)(applicant obligated under 37 C.F.R. §11.18 (formerly 37 C.F.R. §10.18) to inquire into the underlying facts and circumstances when providing statements to the Patent and Trademark Office).

regulations at 37 C.F.R. §1.137(a) and (b) set forth the requirements for a Petitioner to revive a previously unavoidably or unintentionally, respectively, abandoned application.[4],[5]

Moreover, the Office has set forth in the Commentary at MPEP §711.03(c)(I) the showing and timeliness requirements for a proper showing for relief under 37 C.F.R. §1.181 in these matters.

Decisions on reviving abandoned applications on the basis of "unavoidable" delay have adopted the reasonably prudent person standard in determining if the delay was unavoidable:

> The word 'unavoidable' . . . is applicable to ordinary human affairs, and requires no more or greater care or diligence than is generally used and observed by prudent and careful men in relation to their most important business. It permits them in the exercise of this care to rely upon the ordinary and trustworthy agencies of mail and telegraph, worthy and reliable employees, and such other means and instrumentalities as are usually employed in such important business. If unexpectedly, or through the unforeseen fault or imperfection of these agencies and instrumentalities, there occurs a failure, it may properly be said to be unavoidable, all other conditions of promptness in its rectification being present.[6]

Allegations as to the Request to
Withdraw the Holding of Abandonment

The guidance in the Commentary at MPEP §711.03(c)(I) specifies the showing required and how it is to be made and supported.

As discussed above, Petitioner appears not to have made the showing required.

---

[4] See: Changes to Patent Practice and Procedure; Final Rule Notice, 62 Fed. Reg. at 53158-59 (October 10, 1997), 1203 Off. Gaz. Pat. Office at 86-87 (October 21, 1997).

[5] The language of 35 U.S.C. §133 and 37 C.F.R. §1.137(a) is clear, unambiguous, and without qualification: the delay in tendering the reply to the outstanding Office action, as well as filing the first petition seeking revival, must have been unavoidable for the reply now to be accepted on petition. (Therefore, by example, an unavoidable delay in the payment of the Filing Fee might occur if a reply is shipped by the US Postal Service, but due to catastrophic accident, the delivery is not made.) Delays in responding properly raise the question whether delays are unavoidable. Where there is a question whether the delay was unavoidable, Petitioners must meet the burden of establishing that the delay was unavoidable within the meaning of 35 U.S.C. §133 and 37 C.F.R. §1.137(a) And the Petitioner must be diligent in attending to the matter. Failure to do so does not constitute the care required under Pratt, and so cannot satisfy the test for diligence and due care. (By contrast, unintentional delays are those that do not satisfy the very strict statutory and regulatory requirements of unavoidable delay, and also, by definition, are not intentional.))

[6] In re Mattullath, 38 App. D.C. 497, 514-15 (1912)(quoting Ex parte Pratt, 1887 Dec. Comm'r Pat. 31, 32-33 (1887)); see also Winkler v. Ladd, 221 F. Supp. 550, 552, 138 USPQ 666, 167-68 (D.D.C. 1963), aff'd, 143 USPQ 172 (D.C. Cir. 1963); Ex parte Henrich, 1913 Dec. Comm'r Pat. 139, 141 (1913). In addition, decisions on revival are made on a "case-by-case basis, taking all the facts and circumstances into account." Smith v. Mossinghoff, 671 F.2d 533, 538, 213 USPQ 977, 982 (D.C. Cir. 1982). Finally, a petition cannot be granted where a petitioner has failed to meet his or her burden of establishing that the delay was "unavoidable." Haines v. Quigg, 673 F. Supp. 314, 316-17, 5 USPQ2d 1130, 1131-32 (N.D. Ind. 1987).

CONCLUSION

Accordingly, the petition pursuant to 37 C.F.R. §1.181 is **dismissed**.

ALTERNATIVE VENUE

Should Petitioner wish to revive the application, Petitioner may wish to properly file a petition to the Commissioner pursuant to 37 C.F.R. §1.137(b) requesting revival of an application abandoned due to unintentional delay. (See: http://www.uspto.gov/web/offices/pac/mpep/documents/0700_711_03_c.htm#sect711.03c)

A petition to revive on the grounds of unintentional delay must be filed promptly and such petition must be accompanied by the reply, the petition fee, a terminal disclaimer and fee where appropriate and a statement that "the entire delay in filing the required reply from the due date for the reply until the filing of a grantable petition was unintentional." (The statement is in the form available online.)

In this connection, Petitioners are cautioned that the failure to file timely a petition pursuant to 37 C.F.R. §1.137(b) seeking to revive an application abandoned due to unintentional delay may be considered *indicia* of delay that is other than unintentional.

Further correspondence with respect to this matter should be addressed as follows:

By Mail:
Mail Stop PETITION
Commissioner for Patents
P. O. Box 1450
Alexandria, VA 22313-1450

By hand:
U. S. Patent and Trademark Office
Customer Service Window, Mail Stop Petitions
Randolph Building
401 Dulany Street
Alexandria, VA 22314

By facsimile:
(571) 273-8300
Attn: Office of Petitions

Telephone inquiries regarding this decision may be directed to the undersigned at (571) 272-3214—it is noted, however, that all practice before the Office is in writing (see: 37 C.F.R. §1.2[7]) and the proper authority for action on any matter in this regard are the statutes (35 U.S.C.), regulations (37 C.F.R.) and the commentary on policy (MPEP). Therefore, no telephone discussion may be controlling or considered authority for Petitioner's action(s).

/John J. Gillon, Jr./
John J. Gillon, Jr.
Senior Attorney
Office of Petitions

[7] The regulations at 37 C.F.R. §1.2 provide:

§1.2 Business to be transacted in writing.

All business with the Patent and Trademark Office should be transacted in writing. The personal attendance of applicants or their attorneys or agents at the Patent and Trademark Office is unnecessary. The action of the Patent and Trademark Office will be based exclusively on the written record in the Office. No attention will be paid to any alleged oral promise, stipulation, or understanding in relation to which there is disagreement or doubt.

UNITED STATES PATENT AND TRADEMARK OFFICE

Commissioner for Patents
United States Patent and Trademark Office
P.O. Box 1450
Alexandria, VA 22313-1450
www.uspto.gov

FOLEY AND LARDNER LLP
SUITE 500
3000 K STREET NW
WASHINGTON DC 20007

MAILED

NOV 30 2010

OFFICE OF PETITIONS

In re Application of :
Donald O. Hitzman et al. :
Application No. 12/886,308 : DECISION ON PETITION
Filed: September 20, 2010 : TO MAKE SPECIAL UNDER
Attorney Docket No. 018819-0129 : 37 CFR 1.102(c)(1)
:

This is a decision on the petition under 37 CFR 1.102(c)(1), filed September 20, 2010, to make the above-identified application special based on applicant's age as set forth in M.P.E.P. § 708.02, Section IV.

The petition is **GRANTED**.

A grantable petition to make an application special under 37 CFR 1.102(c)(1) and MPEP § 708.02, Section IV: Applicant's Age must be accompanied by evidence showing that at least one of the applicants is 65 years of age, or more, such as a birth certificate or a statement by applicant. No fee is required

The instant petition includes a statement by inventor Donald O. Hitzman attesting to his age. The above-identified application has been accorded "special" status.

Telephone inquiries concerning this decision should be directed to Kimberly Inabinet at 571-272-4618.

All other inquiries concerning either the examination or status of the application should be directed to the Technology Center.

The application is being forwarded to the Technology Center Art Unit 3676 for action on the merits commensurate with this decision.

/Kimberly Inabinet/

Kimberly Inabinet
Petitions Examiner
Office of Petitions

Doc Code: M865 or FAI.REQ.INTV

PTOL-413A (08-10)
Approved for use through 07/31/2012. OMB 0651-0031
U.S. Patent and Trademark Office: U.S. DEPARTMENT OF COMMERCE

Applicant Initiated Interview Request Form

Application No.: 12/886320 First Named Applicant: Zahid Yaqoob
Examiner: R. SLOMSKI Art Unit: 2877 Status of Application: FINAL REJECTION

Tentative Participants:
(1) G. BRENDAN SERAPIGLIA (2) _____
(3) REBECCA SLOMSKI (4) _____

Proposed Date of Interview: 1/20/2012 **Proposed Time:** 11 AM **(AM/PM)**

Type of Interview Requested:
(1) [✓] Telephonic (2) [ ] Personal (3) [ ] Video Conference

Exhibit To Be Shown or Demonstrated: [ ] YES [✓] NO
If yes, provide brief description: _____

Issues To Be Discussed

Issues (Rej., Obj., etc)	Claims/ Fig. #s	Prior Art	Discussed	Agreed	Not Agreed
(1) REJ.	37, 48-50	Swandic	[ ]	✓	[ ]
(2) REJ.	38	Swandic	[ ]	✓	[ ]
(3) REJ.	42	Swandic	[ ]	✓	[ ]
(4) REJ.	53	Swandic	[ ]	✓	[ ]

[✓] Continuation Sheet Attached [✓] Proposed Amendment or Arguments Attached

Brief Description of Arguments to be Presented:
CITED REFERENCES DO NOT DESCRIBE MULTIPLE PASSES OF LIGHT AS RECITED IN CLAIMS

An interview was conducted on the above-identified application on _____

NOTE: This form should be completed and filed by applicant in advance of the interview (see MPEP § 713.01). If this form is signed by a registered practitioner not of record, the Office will accept this as an indication that he or she is authorized to conduct an interview on behalf of the principal (37 CFR 1.32(a)(3)) pursuant to 37 CFR 1.34. This is not a power of attorney to any above named practitioner. See the Instruction Sheet for this form, which is incorporated by reference. By signing this form, applicant or practitioner is certifying that he or she has read the Instruction Sheet. After the interview is conducted, applicant is advised to file a statement of the substance of this interview (37 CFR 1.133(b)) as soon as possible. This application will not be delayed from issue because of applicant's failure to submit a written record of this interview.

/Rebecca C. Bryant/

Applicant/Applicant's Representative Signature — Examiner/SPE Signature

GERARD BRENDAN SERAPIGLIA
Typed/Printed Name of Applicant or Representative

65,177
Registration Number, if applicable

This collection of information is required by 37 CFR 1.133. The information is required to obtain or retain a benefit by the public which is to file (and by the USPTO to process) an application. Confidentiality is governed by 35 U.S.C. 122 and 37 CFR 1.11 and 1.14. This collection is estimated to take 24 minutes to complete, including gathering, preparing, and submitting the completed application form to the USPTO. Time will vary depending upon the individual case. Any comments on the amount of time you require to complete this form and/or suggestions for reducing this burden, should be sent to the Chief Information Officer, U.S. Patent and Trademark Office, U.S. Department of Commerce, P.O. Box 1450, Alexandria, VA 22313-1450. DO NOT SEND FEES OR COMPLETED FORMS TO THIS ADDRESS. SEND TO: Commissioner for Patents, P.O. Box 1450, Alexandria, VA 22313-1450.

If you need assistance in completing the form, call 1-800-PTO-9199 and select option 2.

Doc Code: M865 or FAI.REQ.INTV

PTOL-413A (08-10)
Approved for use through 07/31/2012. OMB 0651-0031
U.S. Patent and Trademark Office: U.S. DEPARTMENT OF COMMERCE

Applicant Initiated Interview Request Form

Application No.: 12/886320 First Named Applicant: Zahid Yaqoob
Examiner: R. SLOMSKI Art Unit: 2677 Status of Application: FINAL REJECTION

Tentative Participants:
(1) G. BRENDAN SERAPIGLIA (2) _____
(3) REBECCA SLOMSKI (4) _____

Proposed Date of Interview: 1/20/2012 **Proposed Time:** 11 AM (AM/PM)

Type of Interview Requested:
(1) [✓] Telephonic (2) [ ] Personal (3) [ ] Video Conference

Exhibit To Be Shown or Demonstrated: [ ] YES [✓] NO
If yes, provide brief description: _____

Issues To Be Discussed

Issues (Rej., Obj., etc)	Claims/ Fig. #s	Prior Art	Discussed	Agreed	Not Agreed
(1) REJ.	37	Pepper	[ ]	✓	[ ]
(2) REJ.	40-41	Pepper	[ ]	✓	[ ]
(3) REJ.	46, 47, 55	Fujisaka	[ ]	✓	[ ]
(4) REJ.	37, 40-57	35 USC 112	[ ]	✓	[ ]

[✓] Continuation Sheet Attached [✓] Proposed Amendment or Arguments Attached

Brief Description of Arguments to be Presented: _____
CITED REFERENCES DO NOT DESCRIBE MULTIPLE PASSES OF LIGHT AS RECITED IN CLAIMS

An interview was conducted on the above-identified application on _____

NOTE: This form should be completed and filed by applicant in advance of the interview (see MPEP § 713.01). If this form is signed by a registered practitioner not of record, the Office will accept this as an indication that he or she is authorized to conduct an interview on behalf of the principal (37 CFR 1.32(a)(3)) pursuant to 37 CFR 1.34. This is not a power of attorney to any above named practitioner. See the Instruction Sheet for this form, which is incorporated by reference. By signing this form, applicant or practitioner is certifying that he or she has read the Instruction Sheet. After the interview is conducted, applicant is advised to file a statement of the substance of this interview (37 CFR 1.133(b)) as soon as possible. This application will not be delayed from issue because of applicant's failure to submit a written record of this interview.

/Rebecca C. Bryant/
Examiner/SPE Signature

Applicant/Applicant's Representative Signature

GERARD BRENDAN SERAPIGLIA
Typed/Printed Name of Applicant or Representative

65,177
Registration Number, if applicable

This collection of information is required by 37 CFR 1.133. The information is required to obtain or retain a benefit by the public which is to file (and by the USPTO to process) an application. Confidentiality is governed by 35 U.S.C. 122 and 37 CFR 1.11 and 1.14. This collection is estimated to take 24 minutes to complete, including gathering, preparing, and submitting the completed application form to the USPTO. Time will vary depending upon the individual case. Any comments on the amount of time you require to complete this form and/or suggestions for reducing this burden, should be sent to the Chief Information Officer, U.S. Patent and Trademark Office, U.S. Department of Commerce, P.O. Box 1450, Alexandria, VA 22313-1450. DO NOT SEND FEES OR COMPLETED FORMS TO THIS ADDRESS. SEND TO: Commissioner for Patents, P.O. Box 1450, Alexandria, VA 22313-1450.

If you need assistance in completing the form, call 1-800-PTO-9199 and select option 2.

UNITED STATES PATENT AND TRADEMARK OFFICE

Commissioner for Patents
United States Patent and Trademark Office
P.O. Box 1450
Alexandria, VA 22313-1450
www.uspto.gov

FOLEY AND LARDNER LLP
SUITE 500
3000 K STREET NW
WASHINGTON DC 20007

MAILED

NOV 15 2010

OFFICE OF PETITIONS

In re Application of :
Donald O. Hitzman et al. :
Application No. 12/886,332 : DECISION ON PETITION
Filed: September 20, 2010 : TO MAKE SPECIAL UNDER
Attorney Docket No. 018819-0128 : 37 CFR 1.102(c)(1)
:

This is a decision on the petition under 37 CFR 1.102(c)(1), filed Sept 20, 2010, to make the above-identified application special based on applicant's age as set forth in M.P.E.P. § 708.02, Section IV.

The petition is **GRANTED**.

A grantable petition to make an application special under 37 CFR 1.102(c)(1) and MPEP § 708.02, Section IV: Applicant's Age must be accompanied by evidence showing that at least one of the applicants is 65 years of age, or more, such as a birth certificate or a statement by applicant. No fee is required

The instant petition includes a statement by inventor Donald O. Hitzman attesting to his age. The above-identified application has been accorded "special" status.

Telephone inquiries concerning this decision should be directed to Kimberly Inabinet at 571-272-4618.

All other inquiries concerning either the examination or status of the application should be directed to the Technology Center.

The application is being forwarded to the Technology Center Art Unit 3676 for action on the merits commensurate with this decision.

/Kimberly Inabinet/

Kimberly Inabinet
Petitions Examiner
Office of Petitions

UNITED STATES PATENT AND TRADEMARK OFFICE

Commissioner for Patents
United States Patent and Trademark Office
P.O. Box 1450
Alexandria, VA 22313-1450
www.uspto.gov

SEP 30 2010

KNOBBE MARTENS OLSON & BEAR LLP
2040 MAIN STREET
FOURTEENTH FLOOR
IRVINE CA 92614

In re Application of:
Fraser et al.

Serial No.: 12/886,341

Filed: September 15, 2010

Docket No.: **CYTH.002DV4C2**

DECISION ON PETITION TO MAKE SPECIAL FOR NEW APPLICATION UNDER 37 C.F.R. § 1.102 & M.P.E.P. § 708.02

Title: **METHODS OF MAKING ENHANCED, AUTOLOGOUS FAT GRAFTS**

This is a decision on the petition filed on September 20, 2010 to make the above-identified application special for accelerated examination procedure under 37 C.F.R. § 1.102(d).

The petition to make the application special is GRANTED.

The application is eligible for accelerated examination and the petition complies with the conditions for granting the application special status pursuant to the "Change to Practice for Petitions in Patent Applications to Make Special and for Accelerated Examination" published June 26, 2006, in the Federal Register. (71 Fed. Reg. 36323).

The prosecution of the instant application will be conducted expeditiously according to the following guidelines.

1. The application will be docketed to an examiner and taken up for action within two weeks of the date of this decision.

2. Restriction Practice:
If the examiner determines that the claims are not directed to a single invention, a telephone request to elect one single invention will be made pursuant to MPEP 812.01. As a prerequisite to the grant of this petition, the applicant has agreed to make an oral election, by telephone, without traverse. If the applicant refuses to make an election without traverse, or the examiner cannot reach the applicant after a reasonable effort, the

examiner will treat the first claimed invention (invention defined by claim 1) as having being constructively elected without traverse for examination.

3. Office action:
   If it is determined that, after appropriate consultation, there is a potential rejection or any other issue to be addressed, the examiner will telephone the applicant and arrange an interview to discuss and resolve the issue. An Office action, other than a Notice of Allowance and Fee(s) Due (Notice of Allowance), will not be issued unless either: 1) an interview was conducted but did not result in agreed to action that places the application in condition for allowance, or, 2) a determination is made that an interview would be unlikely to result in the application being placed in condition for allowance, and 3) an internal conference has been held to review any rejection of any claim.

4. Time for Reply:
   An Office action other than a Notice of Allowance or a final Office action will set a shortened statutory period of one month or thirty days, whichever is longer, for reply with no extension of time available under 37 CFR 1.136(a). Failure to timely file a reply within this non-extendible period for reply will result in the abandonment of the application.

5. Reply by Applicant:
   A timely reply to an Office action other than the Notice of Allowance must be submitted electronically via EFS or EFS-web and limited to addressing the rejections, objections and requirement made. Any amendment that attempts to: 1) add claims which would result in more than three pending independent claims or more than twenty pending total claims; 2) present claims not encompassed by the pre-examination search or an updated accelerated examination support document; or 3) present claims that are directed a non-elected invention or an invention other than that previously claimed and examined in the application, will be treated as not fully responsive and will not be entered.

   For any amendment to the claims (including any new claim) that is not encompassed by the accelerated examination support document, applicant must provide an updated accelerated examination support document that encompasses the amended or new claims at the time of filing of the amendment.

   To proceed expeditiously with the examination, it is recommended that a reply with amendments made to any claim or with any new claim being added be accompanied by an updated accelerated examination support document or a statement explaining how the amended or new claim is supported by the original accelerated examination support document.

6. Information Disclosure Statement (IDS):
   Any IDS filed during prosecution must be submitted electronically via EFS or EFS-web, accompanied by an updated accelerated examination support document, and be in compliance with 37 CFR 1.97 and 1.98.

7. Post-Allowance Processing:
   To expedite processing of the allowed application into a patent, the applicant must: 1) pay the required fees within one month of the date of the Notice of Allowance, and 2) not file any post allowance papers not required by the Office. In no event may the issue fee be paid and accepted later than three months from the date of the Notice of Allowance.

8. After-Final and Appeal Procedures:
   To expedite prosecution, after receiving the final Office action, applicant must: 1) promptly file a notice of appeal, an appeal brief and appeal fees; and 2) not request a pre-appeal brief conference.

   Any amendment, affidavit or other evidence filed after final Office action must comply with applicable rules and the requirements outlined in numbered paragraphs 5 and 6 above.

   On appeal, the application will proceed according to normal appeal procedures. After appeal, the application will again be treated special.

9. Proceedings Outside the Normal Examination Process:
   If the application becomes involved in a proceeding that is outside the normal examination process (e.g., a secrecy order, national security review, interference proceeding, petitions under 37 CFR 1.181, 182 or 183), the application will be treated special before and after such proceeding.

10. Final Disposition:
    The twelve month goal of this accelerated examination procedure ends with a final disposition. The mailing of a final Office action, a Notice of Allowance, the filing of a Notice of Appeal, or the filing of a Request for Continued Examination (RCE) is the final disposition.

If, during prosecution, a paper is not filed electronically using EFS-web, a reply is filed but is not fully responsive, the application is involved in an appeal, or a proceeding outside normal examination process, the application will still be examined expeditiously, however, the final disposition may occur more than twelve months from the filing of the application.

Any inquiry regarding this decision should be directed to Marianne C. Seidel, Quality Assurance Specialist, at (571) 272-0584.

/MC Seidel/
Marianne C. Seidel, Quality Assurance Specialist
Technology Center 1600

UNITED STATES PATENT AND TRADEMARK OFFICE

UNITED STATES DEPARTMENT OF COMMERCE
United States Patent and Trademark Office
Address: COMMISSIONER FOR PATENTS
P.O. Box 1450
Alexandria, Virginia 22313-1450
www.uspto.gov

APPLICATION NO.	FILING DATE	FIRST NAMED INVENTOR	ATTORNEY DOCKET NO.	CONFIRMATION NO.
12/886,341	09/20/2010	John K. Fraser	CYTH.002DV4C2	1396

20995 7590 09/30/2010
KNOBBE MARTENS OLSON & BEAR LLP
2040 MAIN STREET
FOURTEENTH FLOOR
IRVINE, CA 92614

EXAMINER	
ART UNIT	PAPER NUMBER
1651	

NOTIFICATION DATE	DELIVERY MODE
09/30/2010	ELECTRONIC

Please find below and/or attached an Office communication concerning this application or proceeding.

The time period for reply, if any, is set in the attached communication.

Notice of the Office communication was sent electronically on above-indicated "Notification Date" to the following e-mail address(es):

jcartee@kmob.com
efiling@kmob.com
eOAPilot@kmob.com

Doc Code: PET.GREEN
Document Description: Petition for Green Tech Pilot

PTO/SB/420 (12-09)
Approved for use through 05/31/2010. OMB 0651-0062
U.S. Patent and Trademark Office; U. S. DEPARTMENT OF COMMERCE
Under the Paperwork Reduction Act of 1995, no persons are required to respond to a collection of information unless it displays a valid OMB control number.

PETITION TO MAKE SPECIAL UNDER THE GREEN TECHNOLOGY PILOT PROGRAM

Attorney Docket Number: BL100017US-U1	Application Number (if known):	Filing date: 9-20-2010

First Named Inventor: Alexander Shaikevitch

Title: LIGHT-EMITTING DEVICE WITH A SEMI-REMOTE PHOSPHOR COATING

APPLICANT HEREBY REQUESTS TO PARTICIPATE IN THE GREEN TECHNOLOGY PILOT PROGRAM FOR THE ABOVE-IDENTIFIED APPLICATION. See Instruction Sheet on page 2.

This petition must be timely filed electronically using the USPTO electronic filing system, EFS-Web.

1. By filing this petition:

   Applicant is requesting early publication: Applicant hereby requests early publication under 37 CFR 1.219 and the publication fee set forth in 37 CFR 1.18(d) accompanies this request. Applicant hereby rescinds under 37 CFR 1.213(b) any previous filed request that the above-identified application not be published under 35 U.S.C. 122(b).

   If the application has been published, the petition must still be accompanied by the publication fee set forth in 37 CFR 1.18(d) and a statement that the application has been published.

2. By filing this petition: applicant is agreeing to make an election without traverse in a telephonic interview and elect an invention that meets the eligibility requirement and classification requirement set forth in the notice entitled "Pilot Program for Green Technologies Including Greenhouse Gas Reduction" that was published in the Federal Register if the Office determines that the claims are not obviously directed to a single invention.

3. This request is accompanied by statements of special status for the eligibility requirement.

4. The application contains no more than three (3) independent claims and twenty (20) total claims.

5. The application does not contain any multiple dependent claims.

6. Other attachments: Statement Under the Green Technology Pilot Program

Signature	Date Sept 20, 2010
Name (Print/Typed) Albert J. Harnois	Registration Number 46,123

Note: *Signatures of all the inventors or assignees of record of the entire interest or their representative(s) are required in accordance with 37 CFR 1.33 and 11.18. Please see 37 CFR 1.4(d) for the form of the signature. If necessary, submit multiple forms for more than one signature, see below*.*

☐ *Total of _____ forms are submitted.

The information is required to obtain or retain a benefit by the public which is to file (and by the USPTO to process) an application. Confidentiality is governed by 35 U.S.C. 122 and 37 CFR 1.11 and 1.14. This collection is estimated to take 12 hours to complete, including gathering, preparing, and submitting the completed application form to the USPTO. Time will vary depending upon the individual case. Any comments on the amount of time you require to complete this form and/or suggestions for reducing this burden, should be sent to the Chief Information Officer, U.S. Patent and Trademark Office, U.S. Department of Commerce, P.O. Box 1450, Alexandria, VA 22313-1450. DO NOT SEND FEES OR COMPLETED FORMS TO THIS ADDRESS. **SEND TO: Commissioner for Patents, P.O. Box 1450, Alexandria, VA 22313-1450.**

If you need assistance in completing the form, call 1-800-PTO-9199 and select option 2.

UNITED STATES PATENT AND TRADEMARK OFFICE

UNITED STATES DEPARTMENT OF COMMERCE
United States Patent and Trademark Office
Address: COMMISSIONER FOR PATENTS
P.O. Box 1450
Alexandria, Virginia 22313-1450
www.uspto.gov

APPLICATION NO.	FILING DATE	FIRST NAMED INVENTOR	ATTORNEY DOCKET NO.	CONFIRMATION NO.
12/886,349	09/20/2010	Alexander Shaikevitch	BL100017US-U1	1413

81596 7590 10/14/2010

BridgeLux, Inc.
101 PORTOLA AVENUE
LIVERMORE, CA 94551

EXAMINER	
ART UNIT	PAPER NUMBER
2811	

MAIL DATE	DELIVERY MODE
10/14/2010	PAPER

Please find below and/or attached an Office communication concerning this application or proceeding.

The time period for reply, if any, is set in the attached communication.

UNITED STATES PATENT AND TRADEMARK OFFICE

Commissioner for Patents
United States Patent and Trademark Office
P.O. Box 1450
Alexandria, VA 22313-1450
www.uspto.gov

BridgeLux, Inc.
101 PORTOLA AVENUE
LIVERMORE CA 94551

In re Application of	:	
Alexander SHAIKEVITCH	:	DECISION ON PETITION
Application No. 12/886,349	:	TO MAKE SPECIAL UNDER
Filed: September 20, 2010	:	THE GREEN TECHNOLOGY
Attorney Docket No. BL100017US-U1	:	PILOT PROGRAM

This is a decision on the petition under 37 CFR 1.102, filed September 20, 2010, to make the above-identified application special under the pilot program for applications pertaining to Green Technologies as set forth 74 Federal Register Notice 64666 (December 8, 2009) and amended by 75 Federal Register Notice 28554 (May 21, 2010).

The petition is DENIED.

A grantable petition to make an application special under 37 CFR 1.102 and the pilot program as set forth in 74 FR 64666 must be directed to a nonprovisional application filed under 35 USC 111(a) or be a national stage entry under 35 USC 371, exclusive of any reissue applications and be filed prior to the date of the notice, December 8, 2009.

The instant application was filed September 20, 2010 and is therefore not eligible for the Pilot. Since this condition cannot be overcome, the petition is Denied.

The instant application has not been accorded "special" status.

Telephone inquires concerning this decision should be directed to Lee W. Young at 571-272-4549.

The application is being forwarded to the Technology Center Art Unit 2811 for action on the merits commensurate with this decision.

Lee W. Young
Quality Assurance Specialist
Technology Center 2800

Doc Code: PET.GREEN
Document Description: Petition for Green Tech Pilot

PTO/SB/420 (12-09)
Approved for use through 05/31/2010. OMB 0651-0062
U.S. Patent and Trademark Office; U. S. DEPARTMENT OF COMMERCE
Under the Paperwork Reduction Act of 1995, no persons are required to respond to a collection of information unless it displays a valid OMB control number.

PETITION TO MAKE SPECIAL UNDER THE GREEN TECHNOLOGY PILOT PROGRAM

Attorney Docket Number: BL090017US-U1	Application Number (if known): 12/886,349	Filing date: 09-20-2010

First Named Inventor: Alexander Shaikevitch

Title: LIGHT-EMITTING DEVICE WITH A SEMI-REMOTE PHOSPHOR COATING

APPLICANT HEREBY REQUESTS TO PARTICIPATE IN THE GREEN TECHNOLOGY PILOT PROGRAM FOR THE ABOVE-IDENTIFIED APPLICATION. See Instruction Sheet on page 2.

This petition must be timely filed electronically using the USPTO electronic filing system, EFS-Web.

1. By filing this petition:

   Applicant is requesting early publication: Applicant hereby requests early publication under 37 CFR 1.219 and the publication fee set forth in 37 CFR 1.18(d) accompanies this request. Applicant hereby rescinds under 37 CFR 1.213(b) any previous filed request that the above-identified application not be published under 35 U.S.C. 122(b).

   If the application has been published, the petition must still be accompanied by the publication fee set forth in 37 CFR 1.18(d) and a statement that the application has been published.

2. By filing this petition: applicant is agreeing to make an election without traverse in a telephonic interview and elect an invention that meets the eligibility requirement and classification requirement set forth in the notice entitled "Pilot Program for Green Technologies Including Greenhouse Gas Reduction" that was published in the Federal Register if the Office determines that the claims are not obviously directed to a single invention.

3. This request is accompanied by statements of special status for the eligibility requirement.

4. The application contains no more than three (3) independent claims and twenty (20) total claims.

5. The application does not contain any multiple dependent claims.

6. Other attachments: STATEMENT UNDER THE GREEN TECHNOLOGY PILOT PROGRAM

Signature /Pavel Kalousek/	Date 02-16-2011
Name (Print/Typed) Pavel Kalousek	Registration Number 44,178

Note: *Signatures of all the inventors or assignees of record of the entire interest or their representative(s) are required in accordance with 37 CFR 1.33 and 11.18. Please see 37 CFR 1.4(d) for the form of the signature. If necessary, submit multiple forms for more than one signature, see below*.*

☐ *Total of 1 forms are submitted.

The information is required to obtain or retain a benefit by the public which is to file (and by the USPTO to process) an application. Confidentiality is governed by 35 U.S.C. 122 and 37 CFR 1.11 and 1.14. This collection is estimated to take 12 hours to complete, including gathering, preparing, and submitting the completed application form to the USPTO. Time will vary depending upon the individual case. Any comments on the amount of time you require to complete this form and/or suggestions for reducing this burden, should be sent to the Chief Information Officer, U.S. Patent and Trademark Office, U.S. Department of Commerce, P.O. Box 1450, Alexandria, VA 22313-1450. DO NOT SEND FEES OR COMPLETED FORMS TO THIS ADDRESS. **SEND TO: Commissioner for Patents, P.O. Box 1450, Alexandria, VA 22313-1450.**

If you need assistance in completing the form, call 1-800-PTO-9199 and select option 2.

PTO/SB/420 (12-09)
Approved for use through 05/31/2010. OMB 0651-0062
U.S. Patent and Trademark Office; U. S. DEPARTMENT OF COMMERCE
Under the Paperwork Reduction Act of 1995, no persons are required to respond to a collection of information unless it displays a valid OMB control number.

Instruction Sheet for Petition to Make Special Under the Green Technology Pilot Program

(Not to be Submitted to the USPTO)

***The following is a summary of the requirements** (for more information see notice "Pilot Program for Green Technologies Including Greenhouse Gas Reduction" available on the USPTO web site at http://www.uspto.gov/web/offices/pac/dapp/ogsheet.html):*

(1) The application must be a non-reissue, non-provisional utility application filed under 35 U.S.C. 111(a), or an international application that has entered the national stage in compliance with 35 U.S.C. 371. The application must be previously filed before the publication date of the notice cited above. Reexamination proceedings are excluded from this pilot program.

(2) The application must be classified in one of the U.S. classifications listed in section VI of the notice cited above at the time of examination.

(3) The application must contain three or fewer independent claims and twenty or fewer total claims. The application must not contain any multiple dependent claims. For an application that contains more than three independent claims or twenty total claims, or multiple dependent claims, applicant must file a preliminary amendment in compliance with 37 CFR 1.121 to cancel the excess claims and/or the multiple dependent claims at the time the petition to make special is filed.

(4) The claims must be directed to a single invention that materially enhances the quality of the environment, or that materially contributes to: (1) the discovery or development of renewable energy resources; (2) the more efficient utilization and conservation of energy resources; or (3) green house gas emission reduction (see the eligibility requirements of sections II and III of the notice cited above). The petition must include a statement that, if the USPTO determines that the claims are directed to multiple inventions (e.g., in a restriction requirement), applicant will agree to make an election without traverse in a telephonic interview, and elect an invention that meets the eligibility requirements in section II or III of the notice cited above and is classified in one of the U.S. classifications listed in section VI of the notice cited above.

(5) The petition to make special must be timely filed electronically using the USPTO electronic filing system, EFS-Web, and selecting the document description of "Petition for Green Tech Pilot" on the EFS-Web screen. Applicant should use form PTO/SB/420, which will be available as a Portable Document Format (PDF) fillable form in EFS-Web and on the USPTO Web site.

(6) The petition to make special must be filed at least one day prior to the date that a first Office action (which may be an Office action containing only a restriction requirement) appears in the Patent Application Information Retrieval (PAIR) system. Applicant may check the status of the application using PAIR.

(7) The petition to make special must be accompanied by a request for early publication in compliance with 37 CFR 1.219 and the publication fee set forth in 37 CFR 1.18(d).

Privacy Act Statement

The **Privacy Act of 1974 (P.L. 93-579)** requires that you be given certain information in connection with your submission of the attached form related to a patent application or patent. Accordingly, pursuant to the requirements of the Act, please be advised that: (1) the general authority for the collection of this information is 35 U.S.C. 2(b)(2); (2) furnishing of the information solicited is voluntary; and (3) the principal purpose for which the information is used by the U.S. Patent and Trademark Office is to process and/or examine your submission related to a patent application or patent. If you do not furnish the requested information, the U.S. Patent and Trademark Office may not be able to process and/or examine your submission, which may result in termination of proceedings or abandonment of the application or expiration of the patent.

The information provided by you in this form will be subject to the following routine uses:

1. The information on this form will be treated confidentially to the extent allowed under the Freedom of Information Act (5 U.S.C. 552) and the Privacy Act (5 U.S.C 552a). Records from this system of records may be disclosed to the Department of Justice to determine whether disclosure of these records is required by the Freedom of Information Act.

2. A record from this system of records may be disclosed, as a routine use, in the course of presenting evidence to a court, magistrate, or administrative tribunal, including disclosures to opposing counsel in the course of settlement negotiations.

3. A record in this system of records may be disclosed, as a routine use, to a Member of Congress submitting a request involving an individual, to whom the record pertains, when the individual has requested assistance from the Member with respect to the subject matter of the record.

4. A record in this system of records may be disclosed, as a routine use, to a contractor of the Agency having need for the information in order to perform a contract. Recipients of information shall be required to comply with the requirements of the Privacy Act of 1974, as amended, pursuant to 5 U.S.C. 552a(m).

5. A record related to an International Application filed under the Patent Cooperation Treaty in this system of records may be disclosed, as a routine use, to the International Bureau of the World Intellectual Property Organization, pursuant to the Patent Cooperation Treaty.

6. A record in this system of records may be disclosed, as a routine use, to another federal agency for purposes of National Security review (35 U.S.C. 181) and for review pursuant to the Atomic Energy Act (42 U.S.C. 218(c)).

7. A record from this system of records may be disclosed, as a routine use, to the Administrator, General Services, or his/her designee, during an inspection of records conducted by GSA as part of that agency's responsibility to recommend improvements in records management practices and programs, under authority of 44 U.S.C. 2904 and 2906. Such disclosure shall be made in accordance with the GSA regulations governing inspection of records for this purpose, and any other relevant (*i.e.*, GSA or Commerce) directive. Such disclosure shall not be used to make determinations about individuals.

8. A record from this system of records may be disclosed, as a routine use, to the public after either publication of the application pursuant to 35 U.S.C. 122(b) or issuance of a patent pursuant to 35 U.S.C. 151. Further, a record may be disclosed, subject to the limitations of 37 CFR 1.14, as a routine use, to the public if the record was filed in an application which became abandoned or in which the proceedings were terminated and which application is referenced by either a published application, an application open to public inspection or an issued patent.

9. A record from this system of records may be disclosed, as a routine use, to a Federal, State, or local law enforcement agency, if the USPTO becomes aware of a violation or potential violation of law or regulation.

IN THE UNITED STATES PATENT AND TRADEMARK OFFICE

Application No.: 12/886,349
Filing Date: 09-20-2010
First-Named Inventor: Alexander Shaikevitch
Docket No.: BL100017US-U1
Confirmation No.: 1413
Examiner: GARBER, CHARLES D
Group Art Unit: 2812

Via EFS-WEB
Commissioner for Patents
P.O. Box 1450
Alexandria, VA 22313-1450

STATEMENT UNDER THE GREEN TECHNOLOGY PILOT PROGRAM

Dear Sir,

The basis for the Petition to Make Special under the Green Technology Pilot Program is category III of Eligibility Requirements - Energy Conservation.

It is respectfully submitted that aspects of the invention disclosed and claimed in the above-identified application fulfill the Eligibility Requirements because invention facilitates manufacturing and using of a semiconductor based light-emitting device that uses substantially less energy compared to contemporary light-emitting devices used for similar purpose.

Based on the foregoing, it is respectfully submitted that the materiality requirement is met.

Date: February 16, 2011

Respectfully submitted,

By: /Pavel Kalousek/
Pavel Kalousek
858-754-9154
22262 Crestline Road
Palomar Mountain, CA 92060-0245

UNITED STATES PATENT AND TRADEMARK OFFICE

UNITED STATES DEPARTMENT OF COMMERCE
United States Patent and Trademark Office
Address: COMMISSIONER FOR PATENTS
P.O. Box 1450
Alexandria, Virginia 22313-1450
www.uspto.gov

APPLICATION NO.	FILING DATE	FIRST NAMED INVENTOR	ATTORNEY DOCKET NO.	CONFIRMATION NO.
12/886,349	09/20/2010	Alexander Shaikevitch	BL100017US-U1	1413

81596 7590 02/23/2011

BridgeLux, Inc.
101 PORTOLA AVENUE
LIVERMORE, CA 94551

EXAMINER	
GARBER, CHARLES D	
ART UNIT	PAPER NUMBER
2812	
MAIL DATE	DELIVERY MODE
02/23/2011	PAPER

Please find below and/or attached an Office communication concerning this application or proceeding.

The time period for reply, if any, is set in the attached communication.

UNITED STATES PATENT AND TRADEMARK OFFICE

Commissioner for Patents
United States Patent and Trademark Office
P.O. Box 1450
Alexandria, VA 22313-1450
www.uspto.gov

BridgeLux, Inc.
101 PORTOLA AVENUE
LIVERMORE CA 94551

In re Application of	:	
Alexander SHAIKEVITCH	:	DECISION ON PETITION
Application No. 12/886,349	:	TO MAKE SPECIAL UNDER
Filed: September 20, 2010	:	THE GREEN TECHNOLOGY
Attorney Docket No. BL100017US-U1	:	PILOT PROGRAM

This is a decision on the petition under 37 CFR 1.102, filed September 20, 2010 and renewed on February 16, 2011, to make the above-identified application special under the pilot program for applications pertaining to Green Technologies as set forth 74 Federal Register Notice 64666 (December 8, 2009) and amended by 75 Federal Register Notice 28554 (May 21, 2010).

The petition is **GRANTED**.

A grantable petition to make an application special under 37 CFR 1.102 and the pilot program as set forth in 74 FR 64666 must be directed to a nonprovisional application filed under 35 USC 111(a) or be a national stage entry under 35 USC 371, exclusive of any reissue applications.

In order to qualify for special status, the following requirements must be met. 1) The application must have no more than 3 independent claims and no more than 20 total claims. 2) The application must not contain any multiple dependent claims. 3) The petition must state the basis for seeking special status, i.e., the claimed invention either: A) materially enhances the quality of the environment or B) materially contributes to: i) the discovery or development of renewable energy resources, ii) the more efficient utilization and conservation of energy resources, or iii) greenhouse gas emission reduction. 4) If the disclosure is not clear on its face that the claimed invention materially contributes under category (A) or (B), the petition must be accompanied by a statement by the applicant, assignee, or an attorney/agent registered to practice before the Office explaining how the materiality standard is met. 5) A statement that applicant will agree to make an election without traverse in a telephonic interview if a restriction requirement is made by the examiner. 6) The petition to make special must be filed electronically. 7) The petition must be filed at least one day prior to the date that a first Office Action appears in the Patent Application Information Retrieval (PAIR) system. 8) The petition must be accompanied by a request for early publication in compliance with 37 CFR 1.219 and include the publication fee as set forth in 37 CFR 1.18(d).

The requirement for a fee for consideration of the petition to make special for applications pertaining to Green Technologies has been waived.

The instant petition complies with items 1 – 8 above. Accordingly, the above-identified application has been accorded "special" status..

Telephone inquires concerning this decision should be directed to Lee W. Young at 571-272-4549.

The application is being forwarded to the Technology Center Art Unit 2812 for action in its regular turn.

Lee W. Young
Quality Assurance Specialist
Technology Center 2800

UNITED STATES PATENT AND TRADEMARK OFFICE

Commissioner for Patents
United States Patent and Trademark Office
P.O. Box 1450
Alexandria, VA 22313-1450
www.uspto.gov

OKAMOTO & BENEDICTO, LLP
P.O. BOX 641330
SAN JOSE CA 95164

MAILED

MAR 15 2011

OFFICE OF PETITIONS

In re Application of
Eric Yang et al.
Application No. 12/886,350
Filed: September 20, 2010
Attorney Docket Number: 10050.000700

ON PETITION

This is a decision on the petition under 37 CFR 1.182 filed February 7, 2011, to change the name of the inventor due to error on the part of the applicant.

The petition is **GRANTED**.

Petitioner has requested that the inventor listed on the application as JIANG HANG HUNT be correctly listed as HUNT HANG JIANG. A declaration by the inventor explains how the error occurred, that while the name was typed incorrectly, it was signed correctly and that it was without deceptive intent.

In view of the instant request, the following inventor name data will be changed.

Inventor 3) HUNT HANG JIANG

A Corrected Filing Receipt, which reflects the correct name of the inventor accompanies this decision on petition.

This matter is being referred to Technology Center 2811 for examination in due course.

Telephone inquiries concerning this matter should be directed to the undesigned Petitions Attorney at (571) 272-3212.

Patricia Faison-Ball
Senior Petitions Attorney
Office of Petitions

ATTACHMENT: Corrected Filing Receipt

UNITED STATES PATENT AND TRADEMARK OFFICE

UNITED STATES DEPARTMENT OF COMMERCE
United States Patent and Trademark Office
Address: COMMISSIONER FOR PATENTS
P.O. Box 1450
Alexandria, Virginia 22313-1450
www.uspto.gov

APPLICATION NUMBER	FILING or 371(c) DATE	GRP ART UNIT	FIL FEE REC'D	ATTY.DOCKET.NO	TOT CLAIMS	IND CLAIMS
12/886,350	09/20/2010	2811	1350	10050.000700	25	2

CONFIRMATION NO. 1414

CORRECTED FILING RECEIPT

31894
OKAMOTO & BENEDICTO, LLP
P.O. BOX 641330
SAN JOSE, CA 95164

Date Mailed: 03/10/2011

Receipt is acknowledged of this non-provisional patent application. The application will be taken up for examination in due course. Applicant will be notified as to the results of the examination. Any correspondence concerning the application must include the following identification information: the U.S. APPLICATION NUMBER, FILING DATE, NAME OF APPLICANT, and TITLE OF INVENTION. Fees transmitted by check or draft are subject to collection. Please verify the accuracy of the data presented on this receipt. **If an error is noted on this Filing Receipt, please submit a written request for a Filing Receipt Correction. Please provide a copy of this Filing Receipt with the changes noted thereon. If you received a "Notice to File Missing Parts" for this application, please submit any corrections to this Filing Receipt with your reply to the Notice. When the USPTO processes the reply to the Notice, the USPTO will generate another Filing Receipt incorporating the requested corrections**

Applicant(s)

Eric YANG, Saratoga, CA;
Jinghai ZHOU, San Jose, CA;
Hunt Hang JIANG, San Jose, CA;

Power of Attorney: The patent practitioners associated with Customer Number 000031894

Domestic Priority data as claimed by applicant

Foreign Applications (You may be eligible to benefit from the **Patent Prosecution Highway** program at the USPTO. Please see http://www.uspto.gov for more information.)

Permission to Access - A proper **Authorization to Permit Access to Application by Participating Offices** (PTO/SB/39 or its equivalent) has been received by the USPTO.

If Required, Foreign Filing License Granted: 10/04/2010

The country code and number of your priority application, to be used for filing abroad under the Paris Convention, is **US 12/886,350**

Projected Publication Date: 03/22/2012

Non-Publication Request: No

Early Publication Request: No

Title

Integrated Power Converter Package With Die Stacking

Preliminary Class

257

PROTECTING YOUR INVENTION OUTSIDE THE UNITED STATES

Since the rights granted by a U.S. patent extend only throughout the territory of the United States and have no effect in a foreign country, an inventor who wishes patent protection in another country must apply for a patent in a specific country or in regional patent offices. Applicants may wish to consider the filing of an international application under the Patent Cooperation Treaty (PCT). An international (PCT) application generally has the same effect as a regular national patent application in each PCT-member country. The PCT process **simplifies** the filing of patent applications on the same invention in member countries, but **does not result** in a grant of "an international patent" and does not eliminate the need of applicants to file additional documents and fees in countries where patent protection is desired.

Almost every country has its own patent law, and a person desiring a patent in a particular country must make an application for patent in that country in accordance with its particular laws. Since the laws of many countries differ in various respects from the patent law of the United States, applicants are advised to seek guidance from specific foreign countries to ensure that patent rights are not lost prematurely.

Applicants also are advised that in the case of inventions made in the United States, the Director of the USPTO must issue a license before applicants can apply for a patent in a foreign country. The filing of a U.S. patent application serves as a request for a foreign filing license. The application's filing receipt contains further information and guidance as to the status of applicant's license for foreign filing.

Applicants may wish to consult the USPTO booklet, "General Information Concerning Patents" (specifically, the section entitled "Treaties and Foreign Patents") for more information on timeframes and deadlines for filing foreign patent applications. The guide is available either by contacting the USPTO Contact Center at 800-786-9199, or it can be viewed on the USPTO website at http://www.uspto.gov/web/offices/pac/doc/general/index.html.

For information on preventing theft of your intellectual property (patents, trademarks and copyrights), you may wish to consult the U.S. Government website, http://www.stopfakes.gov. Part of a Department of Commerce initiative, this website includes self-help "toolkits" giving innovators guidance on how to protect intellectual property in specific countries such as China, Korea and Mexico. For questions regarding patent enforcement issues, applicants may call the U.S. Government hotline at 1-866-999-HALT (1-866-999-4158).

LICENSE FOR FOREIGN FILING UNDER

Title 35, United States Code, Section 184

Title 37, Code of Federal Regulations, 5.11 & 5.15

GRANTED

The applicant has been granted a license under 35 U.S.C. 184, if the phrase "IF REQUIRED, FOREIGN FILING LICENSE GRANTED" followed by a date appears on this form. Such licenses are issued in all applications where the conditions for issuance of a license have been met, regardless of whether or not a license may be required as

set forth in 37 CFR 5.15. The scope and limitations of this license are set forth in 37 CFR 5.15(a) unless an earlier license has been issued under 37 CFR 5.15(b). The license is subject to revocation upon written notification. The date indicated is the effective date of the license, unless an earlier license of similar scope has been granted under 37 CFR 5.13 or 5.14.

This license is to be retained by the licensee and may be used at any time on or after the effective date thereof unless it is revoked. This license is automatically transferred to any related applications(s) filed under 37 CFR 1.53(d). This license is not retroactive.

The grant of a license does not in any way lessen the responsibility of a licensee for the security of the subject matter as imposed by any Government contract or the provisions of existing laws relating to espionage and the national security or the export of technical data. Licensees should apprise themselves of current regulations especially with respect to certain countries, of other agencies, particularly the Office of Defense Trade Controls, Department of State (with respect to Arms, Munitions and Implements of War (22 CFR 121-128)); the Bureau of Industry and Security, Department of Commerce (15 CFR parts 730-774); the Office of Foreign AssetsControl, Department of Treasury (31 CFR Parts 500+) and the Department of Energy.

NOT GRANTED

No license under 35 U.S.C. 184 has been granted at this time, if the phrase "IF REQUIRED, FOREIGN FILING LICENSE GRANTED" DOES NOT appear on this form. Applicant may still petition for a license under 37 CFR 5.12, if a license is desired before the expiration of 6 months from the filing date of the application. If 6 months has lapsed from the filing date of this application and the licensee has not received any indication of a secrecy order under 35 U.S.C. 181, the licensee may foreign file the application pursuant to 37 CFR 5.15(b).

UNITED STATES PATENT AND TRADEMARK OFFICE

UNITED STATES DEPARTMENT OF COMMERCE
United States Patent and Trademark Office
Address: COMMISSIONER FOR PATENTS
P.O. Box 1450
Alexandria, Virginia 22313-1450
www.uspto.gov

APPLICATION NO.	FILING DATE	FIRST NAMED INVENTOR	ATTORNEY DOCKET NO.	CONFIRMATION NO.
12/886,353	09/20/2010	John K. Fraser	CYTH.002DV4C1	1417

20995 7590 09/30/2010

KNOBBE MARTENS OLSON & BEAR LLP
2040 MAIN STREET
FOURTEENTH FLOOR
IRVINE, CA 92614

EXAMINER	
ART UNIT	PAPER NUMBER
1651	

NOTIFICATION DATE	DELIVERY MODE
09/30/2010	ELECTRONIC

Please find below and/or attached an Office communication concerning this application or proceeding.

The time period for reply, if any, is set in the attached communication.

Notice of the Office communication was sent electronically on above-indicated "Notification Date" to the following e-mail address(es):

jcartee@kmob.com
efiling@kmob.com
eOAPilot@kmob.com

UNITED STATES PATENT AND TRADEMARK OFFICE

Commissioner for Patents
United States Patent and Trademark Office
P.O. Box 1450
Alexandria, VA 22313-1450
www.uspto.gov

SEP 30 2010

KNOBBE MARTENS OLSON & BEAR LLP
2040 MAIN STREET
FOURTEENTH FLOOR
IRVINE CA 92614

In re Application of:
Fraser et al.

Serial No.: 12/886,353

Filed: September 15, 2010

Docket No.: **CYTH.002DV4C1**

DECISION ON PETITION TO MAKE SPECIAL FOR NEW APPLICATION UNDER 37 C.F.R. § 1.102 & M.P.E.P. § 708.02

Title: **METHODS OF MAKING ENHANCED, AUTOLOGOUS FAT GRAFTS**

This is a decision on the petition filed on September 20, 2010 to make the above-identified application special for accelerated examination procedure under 37 C.F.R. § 1.102(d).

The petition to make the application special is GRANTED.

The application is eligible for accelerated examination and the petition complies with the conditions for granting the application special status pursuant to the "Change to Practice for Petitions in Patent Applications to Make Special and for Accelerated Examination" published June 26, 2006, in the Federal Register. (71 Fed. Reg. 36323).

The prosecution of the instant application will be conducted expeditiously according to the following guidelines.

1. The application will be docketed to an examiner and taken up for action within two weeks of the date of this decision.

2. Restriction Practice:
If the examiner determines that the claims are not directed to a single invention, a telephone request to elect one single invention will be made pursuant to MPEP 812.01. As a prerequisite to the grant of this petition, the applicant has agreed to make an oral election, by telephone, without traverse. If the applicant refuses to make an election without traverse, or the examiner cannot reach the applicant after a reasonable effort, the

examiner will treat the first claimed invention (invention defined by claim 1) as having being constructively elected without traverse for examination.

3. Office action:
If it is determined that, after appropriate consultation, there is a potential rejection or any other issue to be addressed, the examiner will telephone the applicant and arrange an interview to discuss and resolve the issue. An Office action, other than a Notice of Allowance and Fee(s) Due (Notice of Allowance), will not be issued unless either: 1) an interview was conducted but did not result in agreed to action that places the application in condition for allowance, or, 2) a determination is made that an interview would be unlikely to result in the application being placed in condition for allowance, and 3) an internal conference has been held to review any rejection of any claim.

4. Time for Reply:
An Office action other than a Notice of Allowance or a final Office action will set a shortened statutory period of one month or thirty days, whichever is longer, for reply with no extension of time available under 37 CFR 1.136(a). Failure to timely file a reply within this non-extendible period for reply will result in the abandonment of the application.

5. Reply by Applicant:
A timely reply to an Office action other than the Notice of Allowance must be submitted electronically via EFS or EFS-web and limited to addressing the rejections, objections and requirement made. Any amendment that attempts to: 1) add claims which would result in more than three pending independent claims or more than twenty pending total claims; 2) present claims not encompassed by the pre-examination search or an updated accelerated examination support document; or 3) present claims that are directed a non-elected invention or an invention other than that previously claimed and examined in the application, will be treated as not fully responsive and will not be entered.

   For any amendment to the claims (including any new claim) that is not encompassed by the accelerated examination support document, applicant must provide an updated accelerated examination support document that encompasses the amended or new claims at the time of filing of the amendment.

   To proceed expeditiously with the examination, it is recommended that a reply with amendments made to any claim or with any new claim being added be accompanied by an updated accelerated examination support document or a statement explaining how the amended or new claim is supported by the original accelerated examination support document.

6. Information Disclosure Statement (IDS):
Any IDS filed during prosecution must be submitted electronically via EFS or EFS-web, accompanied by an updated accelerated examination support document, and be in compliance with 37 CFR 1.97 and 1.98.

7. Post-Allowance Processing:
   To expedite processing of the allowed application into a patent, the applicant must: 1) pay the required fees within one month of the date of the Notice of Allowance, and 2) not file any post allowance papers not required by the Office. In no event may the issue fee be paid and accepted later than three months from the date of the Notice of Allowance.

8. After-Final and Appeal Procedures:
   To expedite prosecution, after receiving the final Office action, applicant must: 1) promptly file a notice of appeal, an appeal brief and appeal fees; and 2) not request a pre-appeal brief conference.

   Any amendment, affidavit or other evidence filed after final Office action must comply with applicable rules and the requirements outlined in numbered paragraphs 5 and 6 above.

   On appeal, the application will proceed according to normal appeal procedures. After appeal, the application will again be treated special.

9. Proceedings Outside the Normal Examination Process:
   If the application becomes involved in a proceeding that is outside the normal examination process (e.g., a secrecy order, national security review, interference proceeding, petitions under 37 CFR 1.181, 182 or 183), the application will be treated special before and after such proceeding.

10. Final Disposition:
    The twelve month goal of this accelerated examination procedure ends with a final disposition. The mailing of a final Office action, a Notice of Allowance, the filing of a Notice of Appeal, or the filing of a Request for Continued Examination (RCE) is the final disposition.

If, during prosecution, a paper is not filed electronically using EFS-web, a reply is filed but is not fully responsive, the application is involved in an appeal, or a proceeding outside normal examination process, the application will still be examined expeditiously, however, the final disposition may occur more than twelve months from the filing of the application.

Any inquiry regarding this decision should be directed to Marianne C. Seidel, Quality Assurance Specialist, at (571) 272-0584.

/MC Seidel/
Marianne C. Seidel, Quality Assurance Specialist
Technology Center 1600

Doc Code: PPH.PCT.652
Document Description: Petition to make special under PCT-Patent Pros Hwy

PTO/SB/20PCT-KR (06-10)
Approved for use through 01/31/2012. OMB 0651-0058
U.S. Patent and Trademark Office; U. S. DEPARTMENT OF COMMERCE
Under the Paperwork Reduction Act of 1995, no persons are required to respond to a collection of information unless it displays a valid OMB control number.

REQUEST FOR PARTICIPATION IN THE PATENT COOPERATION TREATY - PATENT PROSECUTION HIGHWAY (PCT-PPH) PILOT PROGRAM BETWEEN THE KOREAN INTELLECTUAL PROPERTY OFFICE (KIPO) AND THE USPTO

Application No:	12/886,354	Filing date:	September 20, 2010
First Named Inventor:	Jabez McClelland		
Title of the Invention:	Distributed Ion Source Acceleration Column		

THIS REQUEST FOR PARTICIPATION IN THE PCT-PPH PILOT PROGRAM ALONG WITH THE REQUIRED DOCUMENTS MUST BE SUBMITTED VIA EFS-WEB. INFORMATION REGARDING EFS-WEB IS AVAILABLE AT HTTP://WWW.USPTO.GOV/EBC/EFS_HELP.HTML

APPLICANT HEREBY REQUESTS PARTICIPATION IN THE PCT-PPH PROGRAM AND PETITIONS TO MAKE THE ABOVE-IDENTIFIED APPLICATION SPECIAL UNDER THE PCT-PPH PROGRAM.

The above-identified application is (1) a national stage entry of the corresponding PCT application, or (2) a national stage entry of another PCT application which claims priority to the corresponding PCT application, or (3) a national application that claims domestic/ foreign priority to the corresponding PCT application, or (4) a national application which forms the basis for the priority claim in the corresponding PCT application, or (5) a continuing application of a U.S. application that satisfies one of (1) to (4) above, or (6) a U.S. application that claims domestic benefit to a U.S. provisional application which forms the basis for the priority claim in the corresponding PCT application.

The corresponding PCT application number(s) is/are: PCT/US2010/049525

The international date of the corresponding PCT application(s) is/are: September 20, 2010

I. List of Required Documents:

a. **A copy of the latest international work product (WO/ISA, WO/IPEA, or IPER) in the above–identified corresponding PCT application(s)**

☐ Is attached.

☒ Is not attached because the document is already in the U.S. application.

b. **A copy of all claims which were indicated as having novelty, inventive step and industrial applicability in the above-identified corresponding PCT application(s).**

☒ Is attached.

☐ Is not attached because the document is already in the U.S. application.

c. **English translations of the documents in a. and b. above are attached (if the documents are not in the English language). A statement that the English translation is accurate is attached for the document in b. above.**

This collection of information is required by 35 U.S.C. 119, 37 CFR 1.55, and 37 CFR 1.102(d). The information is required to obtain or retain a benefit by the public, which is to file (and by the USPTO to process) an application. Confidentiality is governed by 35 U.S.C. 122 and 37 CFR 1.11 and 1.14. This collection is estimated to take 2 hours to complete, including gathering, preparing, and submitting the completed application form to the USPTO. Time will vary depending upon the individual case. Any comments on the amount of time you require to complete this form and/or suggestions for reducing this burden should be sent to the Chief Information Officer, U.S. Patent and Trademark Office, U.S. Department of Commerce, P.O. Box 1450, Alexandria, VA 22313-1450. DO NOT SEND FEES OR COMPLETED FORMS TO THIS ADDRESS.

PTO/SB/20PCT-KR (06-10)
Approved for use through 01/31/2012. OMB 0651-0058
U.S.Patent and Trademark Office; U.S. DEPARTMENT OF COMMERCE
Under the Paperwork Reduction Act of 1995, no persons are required to respond to a collection of information unless it displays a valid OMB control number.

REQUEST FOR PARTICIPATION IN THE PCT-PPH PILOT PROGRAM BETWEEN THE KIPO AND THE USPTO

(continued)

Application No.:	12/886,354
First Named Inventor:	September 20, 2010

d. **(1) An information disclosure statement listing the documents cited in the international work products (ISR, WO/ISA, WO/IPEA, IPER) of the corresponding PCT application.**

☐ Is attached

☒ Has already been filed in the above-identified U.S. application on May 3, 2011

(2) Copies of all documents (except) for U.S. patents or U.S. patent application publications)

☐ Are attached.

Have already been filed in the above-identified U.S. application on May 3, 2011

II. Claims Correspondence Table:

Claims in US Application	Patentable Claims in the corresponding PCT Application	Explanation regarding the correspondence
Claims 1-26	Claims 1-26	All claims are identical as filed with the Article 19 amendments

III. All the claims in the US application sufficiently correspond to the patentable claims in the corresponding PCT application.

Signature /michael o. scheinberg/	Date July 20, 2011
Name (Print/Typed) Michael O. Scheinberg	Registration Number 36919

UNITED STATES PATENT AND TRADEMARK OFFICE

UNITED STATES DEPARTMENT OF COMMERCE
United States Patent and Trademark Office
Address: COMMISSIONER FOR PATENTS
P.O. Box 1450
Alexandria, Virginia 22313-1450
www.uspto.gov

APPLICATION NO.	FILING DATE	FIRST NAMED INVENTOR	ATTORNEY DOCKET NO.	CONFIRMATION NO.
12/886,354	09/20/2010	Jabez J. McClelland	F200	1418

25784 7590 10/14/2011

MICHAEL O. SCHEINBERG
P.O. BOX 164140
AUSTIN, TX 78716-4140

EXAMINER	
KIM, ROBERT H	

ART UNIT	PAPER NUMBER
2881	

MAIL DATE	DELIVERY MODE
10/14/2011	PAPER

Please find below and/or attached an Office communication concerning this application or proceeding.

The time period for reply, if any, is set in the attached communication.

UNITED STATES PATENT AND TRADEMARK OFFICE

Commissioner for Patents
United States Patent and Trademark Office
P.O. Box 1450
Alexandria, VA 22313-1450
www.uspto.gov

MICHAEL O. SCHEINBERG
P.O. BOX 164140
AUSTIN TX 78716-4140

OCT 14 2011

In re Application of
MCCLELLAND et al.
Application No.: 12/886,354
Filed: 20 September 2010
Attorney Docket No.: F200
For: DISTRIBUTED ION SOURCE ACCELERATION COLUMN

: DECISION ON REQUEST TO
: PARTICIPATE IN THE PATENT
: PROSECUTION HIGHWAY
: PROGRAM AND PETITION
: TO MAKE SPECIAL UNDER
: 37 CFR 1.102(a)

This is a decision on the request to participate in the PCT Patent Prosecution Highway (PCT-PPH) pilot program and the petition under 37 CFR 1.102(a), filed on 20 July 2011, to make the above-identified application special.

The request and petition are **GRANTED**.

Discussion

A grantable request to participate in the PCT-PPH pilot program and petition to make special require:

(1) The U.S. application must have an eligible relationship to one or more PCT applications where the ISA or IPEA are the JPO, EPO, KIPO, NPI, or USPTO;

(2) At least one claim in the PCT application has novelty, inventive step, and industrial applicability and must be free of any observations in Box VIII in the latest work product in the international stage or applicant must identify and explain why the claim(s) is/are not subject to the observation in Box VIII;

(3) Applicant must submit a copy of the claim(s) from the PCT application(s) that have novelty, inventive step, and industrial applicability along with an English translation thereof and a statement that the English translation is accurate, if the claims are not in the English language;

(4) All the claims in the U.S. application must sufficiently correspond or be amended to sufficiently correspond to the claim(s) that have novelty, inventive step, and industrial applicability in the PCT application(s);

(5) Examination of the U.S. application has not begun;

(6) Applicant must submit a copy of the latest international work product from the PCT application indicating that the claim(s) have novelty, inventive step, and industrial applicability

along with an English translation thereof and a statement that the English translation is accurate if the latest international work product is not in the English language;

(7) Applicant must submit an IDS listing the documents cited by the PCT examiner in the international work product along with copies of documents except U.S. patents or U.S. patent application publications.

(8) Applicant is required to submit a claims correspondence table in English which indicates how all the claims in the U.S. application correspond to the claims indicated as having novelty, inventive step and industrial applicability in the latest international work product.

The request to participate in the PCT-PPH pilot program and petition comply with the above requirements. Accordingly, the above-identified application has been accorded "special" status.

Telephone inquiries concerning this decision should be directed to Colleen Dunn at 571-272-1170.

All other inquiries concerning the examination or status of the application is accessible in the PAIR system at http://www.uspto.gov/ebc.index.html.

This application will be forwarded to the examiner for action on the merits commensurate with this decision once this application's formality reviews have been completed.

/Colleen Dunn/

Colleen Dunn
Quality Assurance Specialist
Technology Center 2800

SPE RESPONSE FOR CERTIFICATE OF CORRECTION

DATE : August 18 2011

TO SPE OF : ART UNIT 2835

SUBJECT : Request for Certificate of Correction for Appl. No.: 12/886362 patent no: 7929310

CofC mailroom date: 8-5-11

Please respond to this request for a certificate of correction within 7 days.

FOR IFW FILES:

Please review the requested changes/corrections as shown in the **COCIN** document(s) in the IFW application image. No new matter should be introduced, nor should the scope or meaning of the claims be changed.

Please complete the response (see below) and forward the completed response to scanning using document code **COCX**.

FOR PAPER FILES:

Please review the requested changes/corrections as shown in the attached certificate of correction. Please complete this form (see below) and forward it with the file to:

Certificates of Correction Branch (CofC)
Randolph Square – 9D10-A
Palm Location 7580

Note: _____

_____

Magdalene Talley
Certificates of Correction Branch
571-272-0423 _____

Thank You For Your Assistance

The request for issuing the above-identified correction(s) is hereby:
Note your decision on the appropriate box.

☑ **Approved** — **All** changes apply.

☐ **Approved in Part** — Specify below which changes **do not** apply.

☐ **Denied** — State the reasons for denial below.

Comments: COC approved. It is clear that the item number was in the original drawing and was left out in the patent.

/Jinhee Lee/
SPE

2835
Art Unit

SPE RESPONSE FOR CERTIFICATE OF CORRECTION

DATE : August 18 2011

TO SPE OF : ART UNIT 2835

SUBJECT : Request for Certificate of Correction for Appl. No.: 12/886362 patent no: 7929310

CofC mailroom date: 8-5-11

Please respond to this request for a certificate of correction within 7 days.

FOR IFW FILES:

Please review the requested changes/corrections as shown in the **COCIN** document(s) in the IFW application image. No new matter should be introduced, nor should the scope or meaning of the claims be changed.

Please complete the response (see below) and forward the completed response to scanning using document code **COCX**.

FOR PAPER FILES:

Please review the requested changes/corrections as shown in the attached certificate of correction. Please complete this form (see below) and forward it with the file to:

Certificates of Correction Branch (CofC)
Randolph Square – 9D10-A
Palm Location 7580

Note: _____

_____

Magdalene Talley
Certificates of Correction Branch
571-272-0423 _____

Thank You For Your Assistance

The request for issuing the above-identified correction(s) is hereby:
Note your decision on the appropriate box.

- ☒ **Approved** — **All** changes apply.
- ☐ **Approved in Part** — Specify below which changes **do not** apply.
- ☐ **Denied** — State the reasons for denial below.

Comments: COC approved. It is clear that the item number was in the original drawing and was left out in the patent

/Jinhee Lee/ — **SPE**

2835 — **Art Unit**

Doc code : PET.OP.AGE
Description : Petition to make special based on Age/Health

PTO/SB/130 (07-09)
Approved for use through 07/31/2012. OMB 0651- 0031
U.S. Patent and Trademark Office; U.S. DEPARTMENT OF COMMERCE
Under the Paperwork Reduction Act of 1995, no persons are required to respond to a collection of information unless it contains a valid OMB control number

PETITION TO MAKE SPECIAL BASED ON AGE FOR ADVANCEMENT OF EXAMINATION UNDER 37 CFR 1.102(c)(1)

Application Information

Application Number	12/886,384	Confirmation Number	1481	Filing Date	2010-09-20
Attorney Docket Number (optional)	P1919	Art Unit	3782	Examiner	Not yet assigned
First Named Inventor	F David LaRiviere				
Title of Invention	Semi-Rigid Hand-Carry Bag for Storing, Transporting, Chilling and Displaying Beverages in a Beverage Container				

Attention: Office of Petitions

An application may be made special for advancement of examination upon filing of a petition showing that the applicant is 65 years of age, or more. No fee is required with such a petition. See 37 CFR 1.102(c)(1) and MPEP 708.02 (IV).

APPLICANT HEREBY PETITIONS TO MAKE SPECIAL FOR ADVANCEMENT OF EXAMINATION IN THIS APPLICATION UNDER 37 CFR 1.102(c)(1) and MPEP 708.02 (IV) ON THE BASIS OF THE APPLICANT'S AGE.

A grantable petition requires one of the following items:
(1) Statement by one named inventor in the application that he/she is 65 years of age, or more; or
(2) Certification by a registered attorney/agent having evidence such as a birth certificate, passport, driver's license, etc. showing one named inventor in the application is 65 years of age, or more.

Name of Inventor who is 65 years of age, or older

Given Name	Middle Name	Family Name	Suffix
F	David	LaRiviere	

A signature of the applicant or representative is required in accordance with 37 CFR 1.33 and 10.18. Please see 37 CFR 1.4(d) for the format of the signature.

Select (1) or (2) :

(●) (1) I am an inventor in this application and I am 65 years of age, or more.

( ) (2) I am an attorney or agent registered to practice before the Patent and Trademark Office, and I certify that I am in possession of evidence, and will retain such in the application file record, showing that the inventor listed above is 65 years of age, or more.

Signature	/F David LaRiviere/	Date (YYYY-MM-DD)	2011-05-06
Name	F David LaRiviere		

PTO/SB/130 (07-09)
Approved for use through 07/31/2012. OMB 0651- 0031
U.S. Patent and Trademark Office; U.S. DEPARTMENT OF COMMERCE
Under the Paperwork Reduction Act of 1995, no persons are required to respond to a collection of information unless it contains a valid OMB control number

Privacy Act Statement

The Privacy Act of 1974 (P.L. 93-579) requires that you be given certain information in connection with your submission of the attached form related to a patent application or patent. Accordingly, pursuant to the requirements of the Act, please be advised that: (1) the general authority for the collection of this information is 35 U.S.C. 2(b)(2); (2) furnishing of the information solicited is voluntary; and (3) the principal purpose for which the information is used by the U.S. Patent and Trademark Office is to process and/or examine your submission related to a patent application or patent. If you do not furnish the requested information, the U.S. Patent and Trademark Office may not be able to process and/or examine your submission, which may result in termination of proceedings or abandonment of the application or expiration of the patent.

The information provided by you in this form will be subject to the following routine uses:

1. The information on this form will be treated confidentially to the extent allowed under the Freedom of Information Act (5 U.S.C. 552) and the Privacy Act (5 U.S.C. 552a). Records from this system of records may be disclosed to the Department of Justice to determine whether the Fr eedom of Information Act requires disclosure of these records.

2. A record from this system of records may be disclosed, as a routine use, in the course of presenting evidence to a court, magistrate, or administrative tribunal, including disclosures to opposing counsel in the course of settlement negotiations.

3. A record in this system of records may be disclosed, as a routine use, to a Member of Congress submitting a request involving an individual, to whom the record pertains, when the individual has requested assistance from the Member with respect to the subject matter of the record.

4. A record in this system of records may be disclosed, as a routine use, to a contractor of the Agency having need for the information in order to perform a contract. Recipients of information shall be required to comply with the requirements of the Privacy Act of 1974, as amended, pursuant to 5 U.S.C. 552a(m).

5. A record related to an International Application filed under the Patent Cooperation Treaty in this system of records may be disclosed, as a routine use, to the International Bureau of the World Intellectual Property Organization, pursuant to the Patent Cooperation Treaty.

6. A record in this system of records may be disclosed, as a routine use, to another federal agency for purposes of National Security review (35 U.S.C. 181) and for review pursuant to the Atomic Energy Act (42 U.S.C. 218(c)).

7. A record from this system of records may be disclosed, as a routine use, to the Administrator, General Services, or his/her designee, during an inspection of records conducted by GSA as part of that agency's responsibility to recommend improvements in records management practices and programs, under authority of 44 U.S.C. 2904 and 2906. Such disclosure shall be made in accordance with the GSA regulations governing inspection of records for this purpose, and any other relevant (i.e., GSA or Commerce) directive. Such disclosure shall not be used to make determinations about indivi duals.

8. A record from this system of records may be disclosed, as a routine use, to the public after either publication of the application pursuant to 35 U.S.C. 122(b) or issuance of a patent pursuant to 35 U.S.C. 151. Further, a record may be disclosed, subject to the limitations of 37 CFR 1.14, as a routine use, to the public if the record was filed in an application which became abandoned or in which the proceedings were terminated and which application is referenced by either a published application, an application open to public inspections or an issued patent.

9. A record from this system of records may be disclosed, as a routine use, to a Federal, State, or local law enforcement agency, if the USPTO becomes aware of a violation or potential violation of law or regulation.

UNITED STATES PATENT AND TRADEMARK OFFICE

Commissioner for Patents
United States Patent and Trademark Office
P.O. Box 1450
Alexandria, VA 22313-1450
www.uspto.gov

In re Application of
F. David LaRiviere

Application No. 12886384

Filed: September 20,2010

Attorney Docket No. P1919

:
:
:DECISION ON PETITION TO MAKE SPECIAL
:UNDER 37 CFR 1.102(c)(1)
:

This is a decision on the electronic petition under 37 CFR 1.102 (c)(1), filed 06-MAY-2011 to make the above-identified application special based on applicant's age as set forth in MPEP § 708.02, Section IV.

The petition is **GRANTED**.

A grantable petition to make an application special under 37 CFR 1.102(c)(1), MPEP § 708.02, Section IV: Applicant's Age must include a statement by applicant or a registered practitioner having evidence that applicant is at least 65 years of age. No fee is required.

Accordingly, the above-identified application has been accorded "special" status and will be taken up for action by the examiner upon the completion of all pre-examination processing.

Telephone inquiries concerning this electronic decision should be directed to the Electronic Business Center at 866-217-9197.

All other inquiries concerning either the examination or status of the application should be directed to the Technology Center.

Doc Code: PET.GREEN
Document Description: Petition for Green Tech Pilot

PTO/SB/420 (05-10)
Approved for use through 01/31/2011. OMB 0651-0062
U.S. Patent and Trademark Office; U. S. DEPARTMENT OF COMMERCE
Under the Paperwork Reduction Act of 1995, no persons are required to respond to a collection of information unless it displays a valid OMB control number.

PETITION TO MAKE SPECIAL UNDER THE GREEN TECHNOLOGY PILOT PROGRAM

Attorney Docket Number: O2-0704	Application Number (if known): 12/886,426	Filing date: 09-20-2010

First Named Inventor: Shaolan WANG

Title: VEHICLE ELECTRONIC SYSTEMS WITH BATTERY MANAGEMENT FUNCTIONS

APPLICANT HEREBY REQUESTS TO PARTICIPATE IN THE GREEN TECHNOLOGY PILOT PROGRAM FOR THE ABOVE-IDENTIFIED APPLICATION. **See Instruction Sheet on page 2.**

This petition must be timely filed electronically using the USPTO electronic filing system, EFS-Web.

1. By filing this petition:

   Applicant is requesting early publication: Applicant hereby requests early publication under 37 CFR 1.219 and the publication fee set forth in 37 CFR 1.18(d) accompanies this request.

2. By filing this petition: applicant is agreeing to make an election without traverse in a telephonic interview and elect an invention that meets the eligibility requirements set forth in the notice titled "Pilot Program for Green Technologies Including Greenhouse Gas Reduction," as modified by the notice titled "Elimination of Classification Requirement in the Green Technology Pilot Program," each of which was published in the Federal Register, if the Office determines that the claims are not obviously directed to a single invention.

3. This request is accompanied by statements of special status for the eligibility requirement.

4. The application contains no more than three (3) independent claims and twenty (20) total claims.

5. The application does not contain any multiple dependent claims.

6. Other attachments: _____

Signature /James P. Hao/	Date 12/22/2010
Name (Print/Typed) James P. Hao	Registration Number 36398

Note: *Signatures of all the inventors or assignees of record of the entire interest or their representative(s) are required in accordance with 37 CFR 1.33 and 11.18. Please see 37 CFR 1.4(d) for the form of the signature. If necessary, submit multiple forms for more than one signature, see below*.*

☐ *Total of _____ forms are submitted.

The information is required to obtain or retain a benefit by the public which is to file (and by the USPTO to process) an application. Confidentiality is governed by 35 U.S.C. 122 and 37 CFR 1.11 and 1.14. This collection is estimated to take 1 hour to complete, including gathering, preparing, and submitting the completed application form to the USPTO. Time will vary depending upon the individual case. Any comments on the amount of time you require to complete this form and/or suggestions for reducing this burden, should be sent to the Chief Information Officer, U.S. Patent and Trademark Office, U.S. Department of Commerce, P.O. Box 1450, Alexandria, VA 22313-1450. DO NOT SEND FEES OR COMPLETED FORMS TO THIS ADDRESS. **SEND TO: Commissioner for Patents, P.O. Box 1450, Alexandria, VA 22313-1450.**

If you need assistance in completing the form, call 1-800-PTO-9199 and select option 2.

PTO/SB/420 (05-10)
Approved for use through 01/31/2011. OMB 0651-0062
U.S. Patent and Trademark Office; U. S. DEPARTMENT OF COMMERCE
Under the Paperwork Reduction Act of 1995, no persons are required to respond to a collection of information unless it displays a valid OMB control number.

Instruction Sheet for Petition to Make Special Under the Green Technology Pilot Program

(Not to be Submitted to the USPTO)

***The following is a summary of the requirements** (for more information see the notices (i) "Pilot Program for Green Technologies Including Greenhouse Gas Reduction" and (ii) "Elimination of Classification Requirement in the Green Technology Pilot Program," available on the USPTO web site at http://www.uspto.gov/patents/init_events/green_tech.jsp):*

(1) The application must be a non-reissue, non-provisional utility application filed under 35 U.S.C. 111(a), or an international application that has entered the national stage in compliance with 35 U.S.C. 371. The application must be previously filed before the publication date of the notice cited above. Reexamination proceedings are excluded from this pilot program.

(2) The application must contain three or fewer independent claims and twenty or fewer total claims. The application must not contain any multiple dependent claims. For an application that contains more than three independent claims or twenty total claims, or multiple dependent claims, applicant must file a preliminary amendment in compliance with 37 CFR 1.121 to cancel the excess claims and/or the multiple dependent claims at the time the petition to make special is filed.

(3) The claims must be directed to a single invention that materially enhances the quality of the environment, or that materially contributes to: (1) the discovery or development of renewable energy resources; (2) the more efficient utilization and conservation of energy resources; or (3) green house gas emission reduction (see the eligibility requirements of sections II and III of the notice (i) cited above). The petition must include a statement that, if the USPTO determines that the claims are directed to multiple inventions (e.g., in a restriction requirement), applicant will agree to make an election without traverse in a telephonic interview, and elect an invention that meets the eligibility requirements in section II or III of the notice (i) cited above.

(4) The petition to make special must be timely filed electronically using the USPTO electronic filing system, EFS-Web, and selecting the document description of "Petition for Green Tech Pilot" on the EFS-Web screen. Applicant should use form PTO/SB/420, which is available as a Portable Document Format (PDF) fillable form in EFS-Web and on the USPTO Web site.

(5) The petition to make special must be filed at least one day prior to the date that a first Office action (which may be an Office action containing only a restriction requirement) appears in the Patent Application Information Retrieval (PAIR) system. Applicant may check the status of the application using PAIR.

(6) The petition to make special must be accompanied by a request for early publication in compliance with 37 CFR 1.219 and the publication fee set forth in 37 CFR 1.18(d).

Privacy Act Statement

The **Privacy Act of 1974 (P.L. 93-579)** requires that you be given certain information in connection with your submission of the attached form related to a patent application or patent. Accordingly, pursuant to the requirements of the Act, please be advised that: (1) the general authority for the collection of this information is 35 U.S.C. 2(b)(2); (2) furnishing of the information solicited is voluntary; and (3) the principal purpose for which the information is used by the U.S. Patent and Trademark Office is to process and/or examine your submission related to a patent application or patent. If you do not furnish the requested information, the U.S. Patent and Trademark Office may not be able to process and/or examine your submission, which may result in termination of proceedings or abandonment of the application or expiration of the patent.

The information provided by you in this form will be subject to the following routine uses:

1. The information on this form will be treated confidentially to the extent allowed under the Freedom of Information Act (5 U.S.C. 552) and the Privacy Act (5 U.S.C 552a). Records from this system of records may be disclosed to the Department of Justice to determine whether disclosure of these records is required by the Freedom of Information Act.
2. A record from this system of records may be disclosed, as a routine use, in the course of presenting evidence to a court, magistrate, or administrative tribunal, including disclosures to opposing counsel in the course of settlement negotiations.
3. A record in this system of records may be disclosed, as a routine use, to a Member of Congress submitting a request involving an individual, to whom the record pertains, when the individual has requested assistance from the Member with respect to the subject matter of the record.
4. A record in this system of records may be disclosed, as a routine use, to a contractor of the Agency having need for the information in order to perform a contract. Recipients of information shall be required to comply with the requirements of the Privacy Act of 1974, as amended, pursuant to 5 U.S.C. 552a(m).
5. A record related to an International Application filed under the Patent Cooperation Treaty in this system of records may be disclosed, as a routine use, to the International Bureau of the World Intellectual Property Organization, pursuant to the Patent Cooperation Treaty.
6. A record in this system of records may be disclosed, as a routine use, to another federal agency for purposes of National Security review (35 U.S.C. 181) and for review pursuant to the Atomic Energy Act (42 U.S.C. 218(c)).
7. A record from this system of records may be disclosed, as a routine use, to the Administrator, General Services, or his/her designee, during an inspection of records conducted by GSA as part of that agency's responsibility to recommend improvements in records management practices and programs, under authority of 44 U.S.C. 2904 and 2906. Such disclosure shall be made in accordance with the GSA regulations governing inspection of records for this purpose, and any other relevant (*i.e.*, GSA or Commerce) directive. Such disclosure shall not be used to make determinations about individuals.
8. A record from this system of records may be disclosed, as a routine use, to the public after either publication of the application pursuant to 35 U.S.C. 122(b) or issuance of a patent pursuant to 35 U.S.C. 151. Further, a record may be disclosed, subject to the limitations of 37 CFR 1.14, as a routine use, to the public if the record was filed in an application which became abandoned or in which the proceedings were terminated and which application is referenced by either a published application, an application open to public inspection or an issued patent.
9. A record from this system of records may be disclosed, as a routine use, to a Federal, State, or local law enforcement agency, if the USPTO becomes aware of a violation or potential violation of law or regulation.

UNITED STATES PATENT AND TRADEMARK OFFICE

UNITED STATES DEPARTMENT OF COMMERCE
United States Patent and Trademark Office
Address: COMMISSIONER FOR PATENTS
P.O. Box 1450
Alexandria, Virginia 22313-1450
www.uspto.gov

APPLICATION NO.	FILING DATE	FIRST NAMED INVENTOR	ATTORNEY DOCKET NO.	CONFIRMATION NO.
12/886,426	09/20/2010	Shaolan WANG	0704	1553

71271 7590 01/06/2011

PATENT PROSECUTION
O2MIRCO , INC.
3118 PATRICK HENRY DRIVE
SANTA CLARA, CA 95054

EXAMINER	
ASSOUAD, PATRICK J	
ART UNIT	PAPER NUMBER
2858	
MAIL DATE	DELIVERY MODE
01/06/2011	PAPER

Please find below and/or attached an Office communication concerning this application or proceeding.

The time period for reply, if any, is set in the attached communication.

UNITED STATES PATENT AND TRADEMARK OFFICE

Commissioner for Patents
United States Patent and Trademark Office
P.O. Box 1450
Alexandria, VA 22313-1450
www.uspto.gov

PATENT PROSECUTION
O2MIRCO , INC.
3118 PATRICK HENRY DRIVE
SANTA CLARA CA 95054

In re Application of	:	
WANG et al.	:	DECISION ON PETITION
Application No. 12/886,426	:	TO MAKE SPECIAL UNDER
Filed: September 20, 2010	:	THE GREEN TECHNOLOGY
Attorney Docket No. 0704	:	PILOT PROGRAM

This is a decision on the petition under 37 CFR 1.102, filed on December 22, 2010, to make the above-identified application special under the pilot program for applications pertaining to Green Technologies as set forth 74 Federal Register Notice 64666 (December 8, 2009) and amended by 75 Federal Register Notice 28554 (May 21, 2010) and 75 Federal Register Notice 69049 (November 10, 2010).

The petition is **GRANTED**.

A grantable petition to make an application special under 37 CFR 1.102 and the pilot program as set forth in 74 FR 64666 must be directed to a nonprovisional application filed under 35 USC 111(a) or be a national stage entry under 35 USC 371, exclusive of any reissue applications.

In order to qualify for special status, the following requirements must be met. 1) The application must have no more than 3 independent claims and no more than 20 total claims. 2) The application must not contain any multiple dependent claims. 3) The petition must state the basis for seeking special status, i.e., the claimed invention either: A) materially enhances the quality of the environment or B) materially contributes to: i) the discovery or development of renewable energy resources, ii) the more efficient utilization and conservation of energy resources, or iii) greenhouse gas emission reduction. 4) If the disclosure is not clear on its face that the claimed invention materially contributes under category (A) or (B), the petition must be accompanied by a statement by the applicant, assignee, or an attorney/agent registered to practice before the Office explaining how the materiality standard is met. 5) A statement that applicant will agree to make an election without traverse in a telephonic interview if a restriction requirement is made by the examiner. 6) The petition to make special must be filed electronically. 7) The petition must be filed at least one day prior to the date that a first Office Action appears in the Patent Application Information Retrieval (PAIR) system. 8) The petition must be accompanied by a request for early publication in compliance with 37 CFR 1.219 and include the publication fee as set forth in 37 CFR 1.18(d).

The requirement for a fee for consideration of the petition to make special for applications pertaining to Green Technologies has been waived.

The instant petition complies with items 1 – 8 above. Accordingly, the above-identified application has been accorded "special" status.

Telephone inquires concerning this decision should be directed to Lee W. Young at 571-272-4549.

The application is being forwarded to the Technology Center Art Unit 2858 for action in its regular turn.

Lee W. Young
Quality Assurance Specialist
Technology Center 2800

UNITED STATES PATENT AND TRADEMARK OFFICE

Commissioner for Patents
United States Patent and Trademark Office
P.O. Box 1450
Alexandria, VA 22313-1450
www.uspto.gov

PATENT PROSECUTION
O2MIRCO , INC.
3118 PATRICK HENRY DRIVE
SANTA CLARA CA 95054

MAILED

OCT 06 2011

OFFICE OF PETITIONS

In re Application of
Wang et al.
Application No. 12/886,426
Filed: September 20, 2010
Attorney Docket No. 0704

DECISION ON PETITION
UNDER 37 CFR 1.78(a)(3)
AND 37 CFR 1.78(a)(6)

This is a decision on the petitions under 37 CFR 1.78(a)(3) and 1.78(a)(6), filed September 8, 2011, to accept an unintentionally delayed claim under 35 U.S.C. § 120 and 119(e) for the benefit of the prior-filed applications as set forth in the amendment filed concurrently with the instant petition.

The petition is **DISMISSED**.

A petition for acceptance of a claim for late priority under 37 CFR §§ 1.78(a)(3) and 1.78(a)(6) is only applicable to those applications filed on or after November 29, 2000. Further, the petition is appropriate only after the expiration of the period specified in 37 CFR §§ 1.78(a)(2)(ii) and 1.78(a)(5)(ii). In addition, the petition under 37 CFR §§ 1.78(a)(3) and 1.78(a)(6) must be accompanied by:

(1) the reference required by 35 U.S.C. §§ 120 and 119(e) and 37 CFR §§ 1.78(a)(2)(i) and 1.78(a)(5)(i) of the prior-filed applications, unless previously submitted;
(2) the surcharge set forth in § 1.17(t); and
(3) a statement that the entire delay between the date the claim was due under 37 CFR §§ 1.78(a)(2)(ii) and 1.78(a)(5)(ii) and the date the claim was filed was unintentional. The Commissioner may require additional where there is a question whether the delay was unintentional.

The instant petition does not comply with item (1) above.

With respect to item (1), a reference to add the prior-filed applications on page one following the first sentence of the specification has been included in a concurrently filed amendment. However, the amendment is not acceptable as drafted since it improperly incorporates by reference the prior-filed applications. Petitioner's attention is directed to Dart Industries v. Banner, 636 F.2d 684, 207 USPQ 273 (C.A.D.C. 1980), where the court drew a distinction between a permissible 35 U.S.C. § 120 statement and the impermissible introduction of new matter by way of incorporation by reference in a 35 U.S.C. § 120 statement. The court specifically stated:

> Section 120 merely provides a mechanism whereby an application becomes entitled to benefit of the filing date of an earlier application disclosing the same subject matter. Common subject matter must be disclosed, in both applications,

> either specifically or by an express incorporation-by-reference of prior disclosed subject matter. Nothing in section 120 itself operates to carry forward any disclosure from an earlier application. In re deSeversky, supra at 674, 177 USPQ at 146-147. Section 120 contains no magical disclosure-augmenting powers able to pierce new matter barriers. It cannot, therefore, "limit" the absolute and express prohibition against new matter contained in section 251.

In order for the incorporation by reference statement to be effective as a proper safeguard against the omission of a portion of a prior application, the incorporation by reference statement must be included in the specification-as-filed, or in an amendment specifically referred to in an oath or declaration executing the application. *See* In re deSeversky, *supra*. *Note also* MPEP 201.06(c).

Accordingly, before the petition under 37 CFR 1.78(a)(3) and 1.78(a)(6) can be granted, a substitute amendment[1] deleting the incorporation by reference, along with a renewed petition under 37 CFR 1.78(a)(3) and 1.78(a)(6), is required. No further petition fee is necessary.

Further correspondence with respect to this matter should be addressed as follows:

By mail: Mail Stop PETITIONS
Commissioner for Patents
Post Office Box 1450
Alexandria, VA 22313-1450

By hand: Customer Window located at:
U.S. Patent and Trademark Office
Customer Service Window Randolph Building
401 Dulany Street
Alexandria, VA 22314

By fax: (571) 273-8300
ATTN: Office of Petitions

Any questions concerning this matter may be directed to Joan Olszewski at (571) 272-7751.

/Liana Walsh/
Liana Walsh
Petitions Examiner
Office of Petitions

---

[1] *Note* 37 CFR 1.121

UNITED STATES PATENT AND TRADEMARK OFFICE

Commissioner for Patents
United States Patent and Trademark Office
P.O. Box 1450
Alexandria, VA 22313-1450
www.uspto.gov

PATENT PROSECUTION
O2MIRCO , INC.
3118 PATRICK HENRY DRIVE
SANTA CLARA CA 95054

MAILED
JAN 04 2012
OFFICE OF PETITIONS

In re Application of	:
Wang et al.	: DECISION ON PETITION
Application No. 12/886,426	: UNDER 37 CFR 1.78(a)(3)
Filed: September 20, 2010	: AND 37 CFR 1.78(a)(6)
Attorney Docket No. 0704	:

This is a decision on the renewed petition under 37 CFR 1.78(a)(3) and 1.78(a)(6), filed October 24, 2011, to accept an unintentionally delayed claim under 35 U.S.C. §§120 and 119(e) for the benefit of the prior-filed applications set forth in the Amendment filed concurrently with the instant petition.

The petitions are **DISMISSED**

A petition for acceptance of a claim for late priority under 37 CFR §§ 1.78(a)(3) and 1.78(a)(6) is only applicable to those applications filed on or after November 29, 2000. Further, the petition is appropriate only after the expiration of the period specified in 37 CFR §§ 1.78(a)(2)(ii) and 1.78(a)(5)(ii). In addition, the petition under 37 CFR §§ 1.78(a)(3) and 1.78(a)(6) must be accompanied by:

> (1) the reference required by 35 U.S.C. §§ 120 and 119(e) and 37 CFR §§ 1.78(a)(2)(i) and 1.78(a)(5)(i) of the prior-filed application, unless previously submitted;
> (2) the surcharge set forth in § 1.17(t); and
> (3) a statement that the entire delay between the date the claim was due under 37 CFR §§ 1.78(a)(2)(ii) and 1.78(a)(5)(ii) and the date the claim was filed was unintentional. The Commissioner may require additional where there is a question whether the delay was unintentional.

The instant petition does not comply with item (1) above.

The instant petition does not comply with item (1) above with regards to nonprovisional Application No. 12/157,698 since there are no common inventors with the instant application. As discussed in MPEP 201.11, the later-filed applications must be filed by an inventor or inventors named in the prior-filed application for a benefit claim under 35 U.S.C. §§ 120 and 119(e). There are no common inventors in the instant application and Application No. 12/157,698 and therefore the Filing Receipt mailed October 6, 2010 was erroneously sent. (corrected copy enclosed)

Accordingly, before the petition under 37 CFR 1.78(a)(3) and 1.78(a)(6) can be granted, a renewed petition under 37 CFR 1.78(a)(3) and 1.78(a)(6), correcting the above matters, is required. No further petition fee is necessary.

Further correspondence with respect to this matter should be addressed as follows:

By mail: Mail Stop PETITIONS
Commissioner for Patents
Post Office Box 1450
Alexandria, VA 22313-1450

By hand: Customer Window located at:
U.S. Patent and Trademark Office
Customer Service Window Randolph Building
401 Dulany Street
Alexandria, VA 22314

By fax: (571) 273-8300
ATTN: Office of Petitions

Any questions concerning this matter may be directed to Joan Olszewski at (571) 272-7751.

/Liana Walsh/
Liana Walsh
Petitions Examiner
Office of Petitions

Enclosure: Corrected Filing receipt

UNITED STATES PATENT AND TRADEMARK OFFICE

UNITED STATES DEPARTMENT OF COMMERCE
United States Patent and Trademark Office
Address: COMMISSIONER FOR PATENTS
P.O. Box 1450
Alexandria, Virginia 22313-1450
www.uspto.gov

APPLICATION NUMBER	FILING or 371(c) DATE	GRP ART UNIT	FIL FEE REC'D	ATTY.DOCKET.NO	TOT CLAIMS	IND CLAIMS
12/886,426	09/20/2010	2858	1690	0704	20	2

CONFIRMATION NO. 1553

CORRECTED FILING RECEIPT

71271
PATENT PROSECUTION
O2MIRCO , INC.
3118 PATRICK HENRY DRIVE
SANTA CLARA, CA 95054

Date Mailed: 01/03/2012

Receipt is acknowledged of this non-provisional patent application. The application will be taken up for examination in due course. Applicant will be notified as to the results of the examination. Any correspondence concerning the application must include the following identification information: the U.S. APPLICATION NUMBER, FILING DATE, NAME OF APPLICANT, and TITLE OF INVENTION. Fees transmitted by check or draft are subject to collection. Please verify the accuracy of the data presented on this receipt. **If an error is noted on this Filing Receipt, please submit a written request for a Filing Receipt Correction. Please provide a copy of this Filing Receipt with the changes noted thereon. If you received a "Notice to File Missing Parts" for this application, please submit any corrections to this Filing Receipt with your reply to the Notice. When the USPTO processes the reply to the Notice, the USPTO will generate another Filing Receipt incorporating the requested corrections**

Applicant(s)

Shaolan WANG, Beijing, CHINA;
Wei ZHANG, Shanghai, CHINA;
Ruichao TANG, Shenzhen, CHINA;

Power of Attorney: The patent practitioners associated with Customer Number 71271

Domestic Priority data as claimed by applicant

Foreign Applications (You may be eligible to benefit from the **Patent Prosecution Highway** program at the USPTO. Please see http://www.uspto.gov for more information.)
CHINA 201010273401.6 09/03/2010

If Required, Foreign Filing License Granted: 10/04/2010

The country code and number of your priority application, to be used for filing abroad under the Paris Convention, is **US 12/886,426**

Projected Publication Date: Not Applicable

Non-Publication Request: No

Early Publication Request: No

Title

VEHICLE ELECTRONIC SYSTEMS WITH BATTERY MANAGEMENT FUNCTIONS

Preliminary Class

320

PROTECTING YOUR INVENTION OUTSIDE THE UNITED STATES

Since the rights granted by a U.S. patent extend only throughout the territory of the United States and have no effect in a foreign country, an inventor who wishes patent protection in another country must apply for a patent in a specific country or in regional patent offices. Applicants may wish to consider the filing of an international application under the Patent Cooperation Treaty (PCT). An international (PCT) application generally has the same effect as a regular national patent application in each PCT-member country. The PCT process **simplifies** the filing of patent applications on the same invention in member countries, but **does not result** in a grant of "an international patent" and does not eliminate the need of applicants to file additional documents and fees in countries where patent protection is desired.

Almost every country has its own patent law, and a person desiring a patent in a particular country must make an application for patent in that country in accordance with its particular laws. Since the laws of many countries differ in various respects from the patent law of the United States, applicants are advised to seek guidance from specific foreign countries to ensure that patent rights are not lost prematurely.

Applicants also are advised that in the case of inventions made in the United States, the Director of the USPTO must issue a license before applicants can apply for a patent in a foreign country. The filing of a U.S. patent application serves as a request for a foreign filing license. The application's filing receipt contains further information and guidance as to the status of applicant's license for foreign filing.

Applicants may wish to consult the USPTO booklet, "General Information Concerning Patents" (specifically, the section entitled "Treaties and Foreign Patents") for more information on timeframes and deadlines for filing foreign patent applications. The guide is available either by contacting the USPTO Contact Center at 800-786-9199, or it can be viewed on the USPTO website at http://www.uspto.gov/web/offices/pac/doc/general/index.html.

For information on preventing theft of your intellectual property (patents, trademarks and copyrights), you may wish to consult the U.S. Government website, http://www.stopfakes.gov. Part of a Department of Commerce initiative, this website includes self-help "toolkits" giving innovators guidance on how to protect intellectual property in specific countries such as China, Korea and Mexico. For questions regarding patent enforcement issues, applicants may call the U.S. Government hotline at 1-866-999-HALT (1-866-999-4158).

LICENSE FOR FOREIGN FILING UNDER

Title 35, United States Code, Section 184

Title 37, Code of Federal Regulations, 5.11 & 5.15

GRANTED

The applicant has been granted a license under 35 U.S.C. 184, if the phrase "IF REQUIRED, FOREIGN FILING LICENSE GRANTED" followed by a date appears on this form. Such licenses are issued in all applications where the conditions for issuance of a license have been met, regardless of whether or not a license may be required as

set forth in 37 CFR 5.15. The scope and limitations of this license are set forth in 37 CFR 5.15(a) unless an earlier license has been issued under 37 CFR 5.15(b). The license is subject to revocation upon written notification. The date indicated is the effective date of the license, unless an earlier license of similar scope has been granted under 37 CFR 5.13 or 5.14.

This license is to be retained by the licensee and may be used at any time on or after the effective date thereof unless it is revoked. This license is automatically transferred to any related applications(s) filed under 37 CFR 1.53(d). This license is not retroactive.

The grant of a license does not in any way lessen the responsibility of a licensee for the security of the subject matter as imposed by any Government contract or the provisions of existing laws relating to espionage and the national security or the export of technical data. Licensees should apprise themselves of current regulations especially with respect to certain countries, of other agencies, particularly the Office of Defense Trade Controls, Department of State (with respect to Arms, Munitions and Implements of War (22 CFR 121-128)); the Bureau of Industry and Security, Department of Commerce (15 CFR parts 730-774); the Office of Foreign AssetsControl, Department of Treasury (31 CFR Parts 500+) and the Department of Energy.

NOT GRANTED

No license under 35 U.S.C. 184 has been granted at this time, if the phrase "IF REQUIRED, FOREIGN FILING LICENSE GRANTED" DOES NOT appear on this form. Applicant may still petition for a license under 37 CFR 5.12, if a license is desired before the expiration of 6 months from the filing date of the application. If 6 months has lapsed from the filing date of this application and the licensee has not received any indication of a secrecy order under 35 U.S.C. 181, the licensee may foreign file the application pursuant to 37 CFR 5.15(b).

SelectUSA

The United States represents the largest, most dynamic marketplace in the world and is an unparalleled location for business investment, innovation and commercialization of new technologies. The USA offers tremendous resources and advantages for those who invest and manufacture goods here. Through SelectUSA, our nation works to encourage, facilitate, and accelerate business investment. To learn more about why the USA is the best country in the world to develop technology, manufacture products, and grow your business, visit SelectUSA.gov.

UNITED STATES PATENT AND TRADEMARK OFFICE

Commissioner for Patents
United States Patent and Trademark Office
P.O. Box 1450
Alexandria, VA 22313-1450
www.uspto.gov

MAILED

JAN 27 2012

OFFICE OF PETITIONS

PATENT PROSECUTION
O2MIRCO , INC.
3118 PATRICK HENRY DRIVE
SANTA CLARA CA 95054

In re Application of
Wang et al.
Application No. 12/886,426
Filed: September 20, 2010
Attorney Docket No. 0704

: DECISION ON PETITIONS
: UNDER 37 CFR 1.78(a)(3) AND(a)(6)

This is a decision on the renewed petitions under 37 CFR §§1.78(a)(3) and 1.78(a)(6), filed January 18, 2012, to accept an unintentionally delayed claim under 35 U.S.C. §§ 120 and 119(e) for the benefit of the prior-filed applications set forth in the concurrently filed amendment.

The petitions are **GRANTED**.

A petition for acceptance of a claim for late priority under 37 CFR §§ 1.78(a)(3) and 1.78(a)(6) is only applicable to those applications filed on or after November 29, 2000. Further, the petition is appropriate only after the expiration of the period specified in 37 CFR §§ 1.78(a)(2)(ii) and 1.78(a)(5)(ii). In addition, the petition under 37 CFR §§ 1.78(a)(3) and 1.78(a)(6) must be accompanied by:

(1) the reference required by 35 U.S.C. §§ 120 and 119(e) and 37 CFR §§ 1.78(a)(2)(i) and 1.78(a)(5)(i) of the prior-filed application, unless previously submitted;
(2) the surcharge set forth in § 1.17(t); and
(3) a statement that the entire delay between the date the claim was due under 37 CFR §§ 1.78(a)(2)(ii) and 1.78(a)(5)(ii) and the date the claim was filed was unintentional. The Director may require additional information where there is a question whether the delay was unintentional.

Additionally, the instant nonprovisional application must be pending at the time of filing of the reference to the prior-filed provisional application as required by 37 CFR 1.78(a)(5)(ii). Further, the nonprovisional application claiming the benefit of the prior-filed provisional application must have been filed within twelve months of the filing date of the prior-filed provisional application. All the above requirements having been satisfied, the late claim for benefit of priority under 35 U.S.C. §§ 120 and 119(e) is accepted as being unintentionally delayed.

Further, 37 CFR §§ 1.78(a)(2)(ii) and 1.78(a)(5)(ii) require a statement that the entire delay between the date the claim was due under 37 CFR §§ 1.78(a)(2)(ii) and 1.78(a)(5)(ii) and the date the claim was filed was unintentional. Since the statement appearing in the petition varies from the language required by 37 CFR §§ 1.78(a)(2)(ii) and 1.78(a)(5)(ii), the statement is being construed as the required statement. Petitioner must notify the Office if this is **not** a correct reading of the statement appearing in the petition.

The granting of the petition to accept the delayed benefit claim to the prior-filed applications under 37 CFR §§ 1.78(a)(3) and 1.78(a)(6) should not be construed as meaning that this application is entitled to the benefit of the filing date of the prior-filed applications. In order for this application to be entitled to the benefit of the prior-filed applications, all other requirements under 35 U.S.C. §§120 and 1.78(a)(1) and (a)(2) and under 35 U.S.C. §119(e) and 37 CFR 1.78(a)(4) and (a)(5) must be met. Similarly, the fact that the corrected Filing Receipt accompanying this decision on petition includes the prior-filed applications should not be construed as meaning that applicant is entitled to the claim for benefit of priority to the prior-filed applications noted thereon. Accordingly, the examiner will, in due course, consider this benefit claim and determine whether the application is entitled to the benefit of the earlier filing date.

A corrected Filing Receipt, which includes the priority claim to the prior-filed applications, accompanies this decision on petition.

The issue fee in this case was paid on November 17, 2011 and the application is set to issue into a patent on February 7, 2012. Therefore, the printing of the patent has progressed to the point where the corrected priority may not be included in the Letters Patent. In such event, petitioner may request a certificate of correction pursuant to the provisions of 37 CFR 1.323 and pay the required fee of $100.

Any questions concerning this matter may be directed to Joan Olszewski at (571) 272-7751. All other inquiries concerning either the examination procedures or status of the application should be directed to the Technology Center.

This application is being forwarded to Technology Center Art Unit 2858 for consideration by the examiner of the claim under 35 U.S.C. § §120 and 119(e) of the prior-filed nonprovisional and provisional applications.

/Liana Walsh/
Liana Walsh
Petitions Examiner
Office of Petitions

ATTACHMENT : Corrected Filing Receipt

UNITED STATES PATENT AND TRADEMARK OFFICE

UNITED STATES DEPARTMENT OF COMMERCE
United States Patent and Trademark Office
Address: COMMISSIONER FOR PATENTS
P.O. Box 1450
Alexandria, Virginia 22313-1450
www.uspto.gov

APPLICATION NUMBER	FILING or 371(c) DATE	GRP ART UNIT	FIL FEE REC'D	ATTY.DOCKET.NO	TOT CLAIMS	IND CLAIMS
12/886,426	09/20/2010	2858	1690	0704	20	2

CONFIRMATION NO. 1553

CORRECTED FILING RECEIPT

71271
PATENT PROSECUTION
O2MIRCO , INC.
3118 PATRICK HENRY DRIVE
SANTA CLARA, CA 95054

OC000000052232827

Date Mailed: 01/26/2012

Receipt is acknowledged of this non-provisional patent application. The application will be taken up for examination in due course. Applicant will be notified as to the results of the examination. Any correspondence concerning the application must include the following identification information: the U.S. APPLICATION NUMBER, FILING DATE, NAME OF APPLICANT, and TITLE OF INVENTION. Fees transmitted by check or draft are subject to collection. Please verify the accuracy of the data presented on this receipt. **If an error is noted on this Filing Receipt, please submit a written request for a Filing Receipt Correction. Please provide a copy of this Filing Receipt with the changes noted thereon. If you received a "Notice to File Missing Parts" for this application, please submit any corrections to this Filing Receipt with your reply to the Notice. When the USPTO processes the reply to the Notice, the USPTO will generate another Filing Receipt incorporating the requested corrections**

Applicant(s)

Shaolan WANG, Beijing, CHINA;
Wei ZHANG, Shanghai, CHINA;
Ruichao TANG, Shenzhen, CHINA;

Power of Attorney: The patent practitioners associated with Customer Number 71271

Domestic Priority data as claimed by applicant

This application is a CIP of 11/821,042 06/20/2007
which claims benefit of 60/905,679 03/07/2007

Foreign Applications (You may be eligible to benefit from the **Patent Prosecution Highway** program at the USPTO. Please see http://www.uspto.gov for more information.)
CHINA 201010273401.6 09/03/2010

If Required, Foreign Filing License Granted: 10/04/2010

The country code and number of your priority application, to be used for filing abroad under the Paris Convention, is **US 12/886,426**

Projected Publication Date: 05/03/2012

Non-Publication Request: No

Early Publication Request: No

Title

VEHICLE ELECTRONIC SYSTEMS WITH BATTERY MANAGEMENT FUNCTIONS

Preliminary Class

320

PROTECTING YOUR INVENTION OUTSIDE THE UNITED STATES

Since the rights granted by a U.S. patent extend only throughout the territory of the United States and have no effect in a foreign country, an inventor who wishes patent protection in another country must apply for a patent in a specific country or in regional patent offices. Applicants may wish to consider the filing of an international application under the Patent Cooperation Treaty (PCT). An international (PCT) application generally has the same effect as a regular national patent application in each PCT-member country. The PCT process **simplifies** the filing of patent applications on the same invention in member countries, but **does not result** in a grant of "an international patent" and does not eliminate the need of applicants to file additional documents and fees in countries where patent protection is desired.

Almost every country has its own patent law, and a person desiring a patent in a particular country must make an application for patent in that country in accordance with its particular laws. Since the laws of many countries differ in various respects from the patent law of the United States, applicants are advised to seek guidance from specific foreign countries to ensure that patent rights are not lost prematurely.

Applicants also are advised that in the case of inventions made in the United States, the Director of the USPTO must issue a license before applicants can apply for a patent in a foreign country. The filing of a U.S. patent application serves as a request for a foreign filing license. The application's filing receipt contains further information and guidance as to the status of applicant's license for foreign filing.

Applicants may wish to consult the USPTO booklet, "General Information Concerning Patents" (specifically, the section entitled "Treaties and Foreign Patents") for more information on timeframes and deadlines for filing foreign patent applications. The guide is available either by contacting the USPTO Contact Center at 800-786-9199, or it can be viewed on the USPTO website at http://www.uspto.gov/web/offices/pac/doc/general/index.html.

For information on preventing theft of your intellectual property (patents, trademarks and copyrights), you may wish to consult the U.S. Government website, http://www.stopfakes.gov. Part of a Department of Commerce initiative, this website includes self-help "toolkits" giving innovators guidance on how to protect intellectual property in specific countries such as China, Korea and Mexico. For questions regarding patent enforcement issues, applicants may call the U.S. Government hotline at 1-866-999-HALT (1-866-999-4158).

LICENSE FOR FOREIGN FILING UNDER

Title 35, United States Code, Section 184

Title 37, Code of Federal Regulations, 5.11 & 5.15

GRANTED

The applicant has been granted a license under 35 U.S.C. 184, if the phrase "IF REQUIRED, FOREIGN FILING LICENSE GRANTED" followed by a date appears on this form. Such licenses are issued in all applications where the conditions for issuance of a license have been met, regardless of whether or not a license may be required as

set forth in 37 CFR 5.15. The scope and limitations of this license are set forth in 37 CFR 5.15(a) unless an earlier license has been issued under 37 CFR 5.15(b). The license is subject to revocation upon written notification. The date indicated is the effective date of the license, unless an earlier license of similar scope has been granted under 37 CFR 5.13 or 5.14.

This license is to be retained by the licensee and may be used at any time on or after the effective date thereof unless it is revoked. This license is automatically transferred to any related applications(s) filed under 37 CFR 1.53(d). This license is not retroactive.

The grant of a license does not in any way lessen the responsibility of a licensee for the security of the subject matter as imposed by any Government contract or the provisions of existing laws relating to espionage and the national security or the export of technical data. Licensees should apprise themselves of current regulations especially with respect to certain countries, of other agencies, particularly the Office of Defense Trade Controls, Department of State (with respect to Arms, Munitions and Implements of War (22 CFR 121-128)); the Bureau of Industry and Security, Department of Commerce (15 CFR parts 730-774); the Office of Foreign AssetsControl, Department of Treasury (31 CFR Parts 500+) and the Department of Energy.

NOT GRANTED

No license under 35 U.S.C. 184 has been granted at this time, if the phrase "IF REQUIRED, FOREIGN FILING LICENSE GRANTED" DOES NOT appear on this form. Applicant may still petition for a license under 37 CFR 5.12, if a license is desired before the expiration of 6 months from the filing date of the application. If 6 months has lapsed from the filing date of this application and the licensee has not received any indication of a secrecy order under 35 U.S.C. 181, the licensee may foreign file the application pursuant to 37 CFR 5.15(b).

SelectUSA

The United States represents the largest, most dynamic marketplace in the world and is an unparalleled location for business investment, innovation and commercialization of new technologies. The USA offers tremendous resources and advantages for those who invest and manufacture goods here. Through SelectUSA, our nation works to encourage, facilitate, and accelerate business investment. To learn more about why the USA is the best country in the world to develop technology, manufacture products, and grow your business, visit SelectUSA.gov.

SPE RESPONSE FOR CERTIFICATE OF CORRECTION

DATE : January 6, 2011

TO SPE OF : ART UNIT 3635

SUBJECT : Request for Certificate of Correction for Appl. No.: 12/886456, Patent No.: 8051617

CofC mailroom date: 12-19-11

Please respond to this request for a certificate of correction within 7 days.

FOR IFW FILES:

Please review the requested changes/corrections as shown in the **COCIN** document(s) in the IFW application image. No new matter should be introduced, nor should the scope or meaning of the claims be changed.

Please complete the response (see below) and forward the completed response to scanning using document code **COCX**.

FOR PAPER FILES:

Please review the requested changes/corrections as shown in the attached certificate of correction. Please complete this form (see below) and forward it with the file to:

Certificates of Correction Branch (CofC)
Randolph Square – 9D10-A
Palm Location 7580

Note: _____

_____

Magdalene Talley
Certificates of Correction Branch
571-272-0423 _____

Thank You For Your Assistance

The request for issuing the above-identified correction(s) is hereby:
Note your decision on the appropriate box.

X Approved	**All** changes apply.
☐ **Approved in Part**	Specify below which changes **do not** apply.
☐ **Denied**	State the reasons for denial below.

Comments: _____

_____

_____

_____

_____

/Eileen Lillis/ Eileen Lillis 3635
SPE **Art Unit**

SPE RESPONSE FOR CERTIFICATE OF CORRECTION

DATE : January 6, 2011

TO SPE OF : ART UNIT 3635

SUBJECT : Request for Certificate of Correction for Appl. No.: 12/886456, Patent No.: 8051617

CofC mailroom date: 12-19-11

Please respond to this request for a certificate of correction within 7 days.

FOR IFW FILES:

Please review the requested changes/corrections as shown in the **COCIN** document(s) in the IFW application image. No new matter should be introduced, nor should the scope or meaning of the claims be changed.

Please complete the response (see below) and forward the completed response to scanning using document code **COCX**.

FOR PAPER FILES:

Please review the requested changes/corrections as shown in the attached certificate of correction. Please complete this form (see below) and forward it with the file to:

Certificates of Correction Branch (CofC)
Randolph Square – 9D10-A
Palm Location 7580

Note: _____

_____

Magdalene Talley
Certificates of Correction Branch

571-272-0423 _____

Thank You For Your Assistance

The request for issuing the above-identified correction(s) is hereby:
Note your decision on the appropriate box.

X Approved	**All** changes apply.
❑ **Approved in Part**	Specify below which changes **do not** apply.
❑ **Denied**	State the reasons for denial below.

Comments: _____

/Eileen Lillis/ Eileen Lillis 3635
SPE **Art Unit**

UNITED STATES PATENT AND TRADEMARK OFFICE

Commissioner for Patents
United States Patent and Trademark Office
P.O. Box 1450
Alexandria, VA 22313-1450
www.uspto.gov

OCT 0 5 2010

Stolowitz Ford Cowger, LLP
621 SW Morrison St.
Suite 600
Portland, OR 97205

In re application of
Kamyar Moinzadeh et al.
Application No. 12/886,466
Filed: September 20, 2010
For: CENTRALIZED MANAGEMENT OF MOTOR VEHICLE SOFTWARE APPLICATIONS AND SERVICES

: **DECISION ON PETITION**
: **TO MAKE SPECIAL FOR**
: **NEW APPLICATION**
: **UNDER 37 CFR 1.102**

This is a decision on the petition filed on September 20, 2010 to make the above-identified application special for accelerated examination procedure under 37 C.F.R. § 1.102(d).

The petition to make the application special is **DENIED**.

REGULATION AND PRACTICE

A grantable petition to make special under 37 C.F.R. § 1.102(d) and pursuant to the "Change to Practice for Petitions in Patent Applications to Make Special and for Accelerated Examination" published in the Federal Register on June 26, 2006 (71 Fed. Reg. 36323), must satisfy the following conditions:

I. Conditions Regarding the Application:

1. the application must be a non-reissue utility or design application filed under 37 CFR 1.111(a);

2. the application, the petition and the required fees must be filed electronically using the USPTO's electronic filing system (EFS), or EFS-web; if not filed electronically, a statement asserting that EFS and EFS-web were not available during the normal business hours.

3. at the time of filing, the application must be complete under 37 CFR 1.51 and in condition for examination;

4. the application must contain three or fewer independent claims and twenty or fewer total claims and the claims must be directed to a single invention.

II. Conditions Regarding the Petition:

The petition must:

1. be filed with the application;

2. include a statement that applicant agrees not to separately argue the patentability of any independent claim during any appeal in the application;

3. include a statement that applicant agrees to make an election without traverse in a telephone interview.

4. include a statement that applicant agrees to conduct such an interview when requested by the examiner.

5. include a statement, made based on a good faith belief, that a preexamination search in compliance with the following requirements, was conducted, including an identification of the field of search by United States class and subclass, where applicable, and for database searches, the search logic or chemical structure or sequence used as a query, the name of the file(s) searched and the database service, and the date of the search.

The preexamination search must:

5.1 involve U.S. patents and patent application publications, foreign patent documents, and non-patent literature, unless the applicant can justify with reasonable certainty that no references more pertinent than those already identified are likely to be found in the eliminated sources and includes such a justification with this statement;

5.2. be directed to the claimed invention and encompass all of the features of the claims, giving the claims the broadest reasonable expectation;

5.3. encompass the disclosed features that may be claimed.

6. must provide in support of the petition an accelerated examination support document.

An accelerated examination support document must include:

6.1. an information disclosure statement (IDS) in compliance with 37 CFR 1.98 citing each reference deemed most closely related to the subject matter of each of the claims;

6.2. an identification of all the limitations in the claims that are disclosed by the reference specifying where the limitation is disclosed in the cited reference;

6.3. a detailed explanation of how each of the claims are patentable over the references cited with particularity required by 37 CFR 1.111(b) and (c);

6.4. a concise statement of the utility of the invention as defined in each of the independent claims (unless the application is a design application);

6.5. a showing of where each limitation of the claims finds support under 35 USC 112, first paragraph, in the written description of the specification. If applicable, the showing must also identify: (1) each means- (or step) plus-function claim element that invokes consideration under 35 UDC 112, sixth paragraph; and (2) the structure, material, or acts in the specification that corresponds to each means- (or step) plus-function claim element that invokes consideration under 35 UDC 112, sixth paragraph; if the application claims the benefit of one or more applications under title 35, United States Code, the showing must also include where each limitation of the claims finds support under 35 USC 112, first paragraph, in each such application in which such supports exists;

6.6. an identification of any cited references that may be disqualified under 35 USC 103(c).

REVIEW OF FACTS

The petition fails to comply with at least condition I.3, above.

Because the application was filed with a missing oath or declaration, the application is considered to be informal as evidenced by the Notice to File Missing Parts of Nonprovisional Application dated September 23, 2010 and thus not in condition for examination.

Although the petition has not been further considered on it's merits, it is also noted that it does not appear that the required petition fee had been submitted, nor have the required Search and Support documents been submitted as outlined above.

Therefore, the petition fails to meet the required conditions to be accorded special status under the accelerated examination procedure. Given the above failure of filing a complete application, which cannot now be remedied, the petition has not been further reviewed on the merits.

DECISION

For the above-stated reasons, the petition is **DENIED**. The application will therefore be taken up by the examiner for action in its regular turn. Further petitions for accelerated examination in this application will not be entertained.

Any inquiry regarding this decision should be directed to Steven N. Meyers, Quality Assurance Specialist, at (571) 272-6611.

Steven N. Meyers,
Quality Assurance Specialist
Technology Center 3600

Sm/sm: 10/5/10

UNITED STATES PATENT AND TRADEMARK OFFICE

Commissioner for Patents
United States Patent and Trademark Office
P.O. Box 1450
Alexandria, VA 22313-1450
www.uspto.gov

METABOLEX, INC.
C/O FOLEY & LARDNER LLP
975 PAGE MILL ROAD
PALO ALTO CA 94304

MAILED
JUL 27 2011
OFFICE OF PETITIONS

In re Application of	:	
Jiangao Song et al.	:	
Application No. 12/886,470	:	NOTICE
Filed: September 20, 2010	:	
Attorney Docket No. 090446-0701	:	

This is a notice regarding your request for acceptance of a fee deficiency submission under 37 CFR 1.28 June 28, 2011.

The Office no longer investigates or rejects original or reissue applications under 37 CFR 1.56. **1098 Off. Gaz. Pat. Office 502 (January 3, 1989)**. Therefore, nothing in this Notice is intended to imply that an investigation was done.

Your fee deficiency submission under 37 CFR 1.28 is hereby **ACCEPTED**.

This application is no longer entitled to small entity status. Accordingly, all future fees paid in this application must be paid at the large entity rate.

Inquiries related to this communication should be directed to the undersigned at (571) 272-2783.

/Tredelle D. Jackson/
Paralegal Specialist
Office of Petitions

UNITED STATES PATENT AND TRADEMARK OFFICE

Commissioner for Patents
United States Patent and Trademark Office
P.O. Box 1450

MAILED

SEP 22 2011

OFFICE OF PETITIONS

John Alumit
16830 Ventura Blvd. Suite 360
Encino CA 91364

In re Application of	:	
Karus David SESSFORD	:	ON PETITION
Application No. 12/886,481	:	
Filed: September 20, 2010	:	
Atty. Docket No.: 23463-002	:	

This is a decision on the petition under 37 CFR 1.137(b), filed September 12, 2011, to revive the above-identified application.

The petition is **GRANTED**.

The application became abandoned for failure to reply in a timely manner to the Notice to File Missing Parts mailed October 22, 2010 (Notice), which set a shortened period for reply of two (2) months. A two month extension of time was obtained. The application became abandoned on February 23, 2011. A Notice of Abandonment was mailed June 2, 2011.

The petition satisfies the conditions for revival pursuant to 37 CFR 1.137(b) by including (1) a reply in the form of a Response to the Notice mailed October 22, 2010, (2) a petition fee of $810, and (3) a statement of unintentional delay. The reply to the Notice is accepted as having been unintentionally delayed.

Telephone inquiries relating to this decision should be directed to Robert DeWitty, Petitions Attorney, Office of Petitions (571-272-8427).

The application will be referred to Office of Patent Application Processing for further processing.

Anthony Knight
Director
Office of Petitions

Doc Code: PET.GREEN
Document Description: Petition for Green Tech Pilot

PTO/SB/420 (11-10)
Approved for use through 01/31/2011. OMB 0651-0062
U.S. Patent and Trademark Office: U. S. DEPARTMENT OF COMMERCE
Under the Paperwork Reduction Act of 1995, no persons are required to respond to a collection of information unless it displays a valid OMB control number.

PETITION TO MAKE SPECIAL UNDER THE GREEN TECHNOLOGY PILOT PROGRAM

Attorney Docket Number: 679.000	Application Number (if known): 12/886,518	Filing date: September 20, 2010
First Named Inventor: Daniel E. MORRISON		
Title: WIND TURBINE ALTERNATOR MODULE		

APPLICANT HEREBY REQUESTS TO PARTICIPATE IN THE GREEN TECHNOLOGY PILOT PROGRAM FOR THE ABOVE-IDENTIFIED APPLICATION. See Instruction Sheet on page 2.

This petition must be timely filed electronically using the USPTO electronic filing system, EFS-Web.

1. By filing this petition:

   Applicant is requesting early publication: Applicant hereby requests early publication under 37 CFR 1.219 and the publication fee set forth in 37 CFR 1.18(d) accompanies this request.

2. By filing this petition: applicant is agreeing to make an election without traverse in a telephonic interview and elect an invention that meets the eligibility requirements for the Green Technology Pilot Program, if the Office determines that the claims are not obviously directed to a single invention. See Instruction Sheet.

3. This request is accompanied by statements of special status for the eligibility requirement.

4. The application contains no more than three (3) independent claims and twenty (20) total claims.

5. The application does not contain any multiple dependent claims.

6. Other attachments: _____

Signature /Cliff Hyra/	Date February 18, 2011
Name (Print/Typed) Clifford D. Hyra	Registration Number 60,086

Note: *Signatures of all the inventors or assignees of record of the entire interest or their representative(s) are required in accordance with 37 CFR 1.33 and 11.18. Please see 37 CFR 1.4(d) for the form of the signature. If necessary, submit multiple forms for more than one signature see below*.*

[X] *Total of 1 forms are submitted.

The information is required to obtain or retain a benefit by the public which is to file (and by the USPTO to process) an application. Confidentiality is governed by 35 U.S.C. 122 and 37 CFR 1.11 and 1.14. This collection is estimated to take 12 hours to complete, including gathering, preparing, and submitting the completed application form to the USPTO. Time will vary depending upon the individual case. Any comments on the amount of time you require to complete this form and/or suggestions for reducing this burden, should be sent to the Chief Information Officer, U.S. Patent and Trademark Office, U.S. Department of Commerce, P.O. Box 1450, Alexandria, VA 22313-1450. DO NOT SEND FEES OR COMPLETED FORMS TO THIS ADDRESS. **SEND TO: Commissioner for Patents, P.O. Box 1450, Alexandria, VA 22313-1450.**

If you need assistance in completing the form, call 1-800-PTO-9199 and select option 2.

IN THE UNITED STATES PATENT AND TRADEMARK OFFICE

In re Application of

Daniel E. MORRISON

Examiner:Nicholas Ponomarenko

Serial No.: 12/886,518

Art Unit: 2839

Filed: September 20, 2010

For: WIND TURBINE ALTERNATOR MODULE

STATEMENTS OF SPECIAL STATUS FOR GREEN TECHNOLOGY PILOT PROGRAM ELEIGIBILITY REQUIREMENT

To the Director of the Patent and Trademark Office

Sir:

This application is entitled to special status under the Green Technology Pilot Program because it pertains to green technologies, including at least the development of renewable energy resources and greenhouse gas emission reduction. The application teaches new apparatuses for providing wind-generated electrical energy, and therefore the development of the renewable energy resource of wind power. Furthermore, the apparatuses generate electrical power without producing greenhouse gas emissions, and therefore to the extent that they replace existing sources of electrical power that do produce greenhouse gasses, such as coal-fired plants, they reduce overall greenhouse gas emissions.

Grant of the petition and advancement of the application out of turn for examination are respectfully requested.

Respectfully,

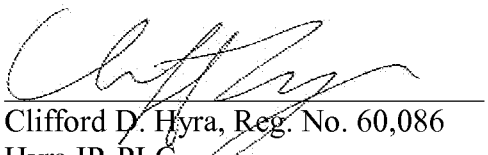

Clifford D. Hyra, Reg. No. 60,086
Hyra IP, PLC
12120 Sunset Hills Road, Suite 600
Reston, Virginia 20190
Tel: (866) 913-3499
Fax: (866) 913-3501

Date: February 18, 2011

UNITED STATES PATENT AND TRADEMARK OFFICE

UNITED STATES DEPARTMENT OF COMMERCE
United States Patent and Trademark Office
Address: COMMISSIONER FOR PATENTS
P.O. Box 1450
Alexandria, Virginia 22313-1450
www.uspto.gov

APPLICATION NO.	FILING DATE	FIRST NAMED INVENTOR	ATTORNEY DOCKET NO.	CONFIRMATION NO.
12/886,518	09/20/2010	Daniel Morrison	679.000	1715

84649 7590 02/24/2011

HYRA IP, PLC
11710 Plaza America Drive
Suite 2000
Reston, VA 20190

EXAMINER	
PONOMARENKO, NICHOLAS	
ART UNIT	PAPER NUMBER
2839	

NOTIFICATION DATE	DELIVERY MODE
02/24/2011	ELECTRONIC

Please find below and/or attached an Office communication concerning this application or proceeding.

The time period for reply, if any, is set in the attached communication.

Notice of the Office communication was sent electronically on above-indicated "Notification Date" to the following e-mail address(es):

CliffordHyra@HyraIP.com
Info@HyraIP.com
chyra@vt.edu

UNITED STATES PATENT AND TRADEMARK OFFICE

Commissioner for Patents
United States Patent and Trademark Office
P.O. Box 1450
Alexandria, VA 22313-1450
www.uspto.gov

HYRA IP, PLC
11710 Plaza America Drive
Suite 2000
Reston VA 20190

In re Application of	:	
Daniel MORRISON	:	DECISION ON PETITION
Application No. 12/886,518	:	TO MAKE SPECIAL UNDER
Filed: September 20, 2010	:	THE GREEN TECHNOLOGY
Attorney Docket No. 679.000	:	PILOT PROGRAM

This is a decision on the petition under 37 CFR 1.102, filed on February 18, 2011, to make the above-identified application special under the pilot program for applications pertaining to Green Technologies as set forth 74 Federal Register Notice 64666 (December 8, 2009) and amended by 75 Federal Register Notice 28554 (May 21, 2010) and 75 Federal Register Notice 69049 (November 10, 2010).

The petition is **GRANTED**.

A grantable petition to make an application special under 37 CFR 1.102 and the pilot program as set forth in 74 FR 64666 must be directed to a nonprovisional application filed under 35 USC 111(a) or be a national stage entry under 35 USC 371, exclusive of any reissue applications.

In order to qualify for special status, the following requirements must be met. 1) The application must have no more than 3 independent claims and no more than 20 total claims. 2) The application must not contain any multiple dependent claims. 3) The petition must state the basis for seeking special status, i.e., the claimed invention either: A) materially enhances the quality of the environment or B) materially contributes to: i) the discovery or development of renewable energy resources, ii) the more efficient utilization and conservation of energy resources, or iii) greenhouse gas emission reduction. 4) If the disclosure is not clear on its face that the claimed invention materially contributes under category (A) or (B), the petition must be accompanied by a statement by the applicant, assignee, or an attorney/agent registered to practice before the Office explaining how the materiality standard is met. 5) A statement that applicant will agree to make an election without traverse in a telephonic interview if a restriction requirement is made by the examiner. 6) The petition to make special must be filed electronically. 7) The petition must be filed at least one day prior to the date that a first Office Action appears in the Patent Application Information Retrieval (PAIR) system. 8) The petition must be accompanied by a request for early publication in compliance with 37 CFR 1.219 and include the publication fee as set forth in 37 CFR 1.18(d).

The requirement for a fee for consideration of the petition to make special for applications pertaining to Green Technologies has been waived.

The instant petition complies with items 1 – 8 above. Accordingly, the above-identified application has been accorded "special" status.

Telephone inquires concerning this decision should be directed to Lee W. Young at 571-272-4549.

The application is being forwarded to the Technology Center Art Unit 2839 for action in its regular turn.

Lee W. Young
Quality Assurance Specialist
Technology Center 2800

UNITED STATES PATENT AND TRADEMARK OFFICE

UNITED STATES DEPARTMENT OF COMMERCE
United States Patent and Trademark Office
Address: COMMISSIONER FOR PATENTS
P.O. Box 1450
Alexandria, Virginia 22313-1450
www.uspto.gov

BIB DATA SHEET

CONFIRMATION NO. 1723

SERIAL NUMBER	FILING or 371(c) DATE RULE	CLASS	GROUP ART UNIT	ATTORNEY DOCKET NO.
12/886,524	09/20/2010	349	2883	P2120USD1

APPLICANTS

Myung-Sub LEE, Seoul, KOREA, REPUBLIC OF;
Sun-Kyu JOO, Seoul, KOREA, REPUBLIC OF;
Yun-Seok LEE, Cheonan-si, KOREA, REPUBLIC OF;

**** CONTINUING DATA ***************************

This application is a DIV of 11/856,442 09/17/2007 PAT 7,817,227

**** FOREIGN APPLICATIONS ***************************

REPUBLIC OF KOREA 10-2006-0091388 09/20/2006

**** IF REQUIRED, FOREIGN FILING LICENSE GRANTED ****

10/05/2010

Foreign Priority claimed	☑ Yes ☐ No	☐ Met after Allowance	STATE OR COUNTRY	SHEETS DRAWINGS	TOTAL CLAIMS	INDEPENDENT CLAIMS
35 USC 119(a-d) conditions met	☑ Yes ☐ No		KOREA, REPUBLIC OF	14	12	2
Verified and Acknowledged	/CHARLIE PENG/ Examiner's Signature	Initials				

ADDRESS

H.C. PARK & ASSOCIATES, PLC
8500 LEESBURG PIKE
SUITE 7500
VIENNA, VA 22182
UNITED STATES

TITLE

ARRAY SUBSTRATE, DISPLAY PANEL HAVING THE SAME AND METHOD OF MANUFACTURING THE SAME

FILING FEE RECEIVED		
1090	FEES: Authority has been given in Paper No._____ to charge/credit DEPOSIT ACCOUNT No._____ for following:	☐ All Fees ☐ 1.16 Fees (Filing) ☐ 1.17 Fees (Processing Ext. of time) ☐ 1.18 Fees (Issue) ☐ Other _____ ☐ Credit

UNITED STATES PATENT AND TRADEMARK OFFICE

Commissioner for Patents
United States Patent and Trademark Office
P.O. Box 1450
Alexandria, VA 22313-1450
www.uspto.gov

In re Application of
Harvey Blum

Application No. 12886562

Filed:

Attorney Docket No. 01003.0006

:DECISION ON PETITION TO MAKE SPECIAL
:UNDER 37 CFR 1.102(c)(1)

This is a decision on the electronic petition under 37 CFR 1.102 (c)(1), filed 27-SEP-2010 to make the above-identified application special based on applicant's age as set forth in MPEP § 708.02, Section IV.

The petition is **GRANTED**.

A grantable petition to make an application special under 37 CFR 1.102(c)(1), MPEP § 708.02, Section IV: Applicant's Age must include a statement by applicant or a registered practitioner having evidence that applicant is at least 65 years of age. No fee is required.

Accordingly, the above-identified application has been accorded "special" status and will be taken up for action by the examiner upon the completion of all pre-examination processing.

Telephone inquiries concerning this electronic decision should be directed to the Electronic Business Center at 866-217-9197.

All other inquiries concerning either the examination or status of the application should be directed to the Technology Center.

UNITED STATES PATENT AND TRADEMARK OFFICE

Commissioner for Patents
United States Patent and Trademark Office
P.O. Box 1450
Alexandria, VA 22313-1450
www.uspto.gov

KF ROSS PC
5683 RIVERDALE AVENUE
SUITE 203 BOX 900
BRONX NY 10471-0900

MAILED

APR 11 2011

OFFICE OF PETITIONS

In re Application of
Samadijavan et al.
Application No. 12/886,628
Filed: September 21, 2010
Attorney Dkt. No. 30081
For: SHIPPING BAG AND METHOD OF MAKING A REINFORCED SELVAGE

DECISION REFUSING STATUS UNDER 37 CFR 1.47(a)

This is in response to the petition under 37 CFR 1.47(a), filed February 27, 2011.

The petition is dismissed.

Rule 47 applicant is given TWO MONTHS from the mailing date of this decision to reply, correcting the below-noted deficiencies. Any reply should be entitled "Request for Reconsideration of Petition Under 37 CFR 1.47(a)," and should only address the deficiencies noted below, except that the reply may include an oath or declaration executed by the non-signing inventor. **FAILURE TO RESPOND WILL RESULT IN ABANDONMENT OF THE APPLICATION.** Any extensions of time will be governed by 37 CFR 1.136(a).

A grantable petition under 37 CFR 1.47(a) requires: (1) proof that the non-signing inventor cannot be reached or refuses to sign the oath or declaration after having been presented with the application papers (specification, claims and drawings); (2) an acceptable oath or declaration in compliance with 35 U.S.C. §§ 115 and 116; (3) the petition fee; and (4) a statement of the last known address of the non-signing inventor. Applicants lack items (1) set forth above.

The petition fee required is $200.00. Pursuant to petitioner's request deposit account 18-2025 will be charged the $70.00 difference.

As to item (1), rule 47 applicant must demonstrate with documented evidence that an inventor refuses to join in the application after having been presented with the application papers (specification, claims, drawings and oath or declaration). There is no indication herein that inventor Luca was presented with a copy of the complete application papers for this application. Rule 47 applicant states that despite several requests inventor Luca has refused to execute the application papers. However no evidence of such efforts has been provided.

Unless petitioner can show that a copy of the application papers was presented to the joint inventor, then petitioner will have to mail a copy of the complete application papers (specification, claims and drawings) to the last known address of the joint inventor, return receipt requested. A cover letter of instructions should accompany the mailing of the application papers setting a deadline or a statement that no response will constitute a refusal. This sort of ultimatum lends support to a finding of refusal by conduct. **The proof of the pertinent events should be made by a statement of someone with firsthand knowledge of the events and should include documentary evidence, such as certified mail return receipt, cover letter of instructions, telegram, etc.** *See* MPEP 409.03(d).

Where there is an express or oral refusal, that fact, along with the time and place of the refusal, must be stated in an affidavit or declaration **by the party to whom the refusal was made.** Where there is a written refusal, a copy of the document(s) evidencing that refusal must be made part of the affidavit or declaration.

When it is concluded by the rule 47 applicant that an omitted inventor's conduct constitutes a refusal, all facts upon which that conclusion is based should be stated in an affidavit or declaration. If there is documentary evidence to support facts alleged in the affidavit or declaration, such evidence must be submitted.

Whenever an omitted inventor gives a reason for refusing to sign the application oath or declaration, that reason should be stated in the affidavit or declaration.

To the extent that it is determined that the inventor no longer receives mail at the last known address, applicant will need to demonstrate diligent effort was used to locate inventor Fernandez. See MPEP 409.03(b).

It is further noted the declaration submitted on February 2, 2011 will be used for processing as it includes the entire inventive. The declarations provided on February 27, 2011 failed to include inventor Luca. All the available joint inventors must (1) make oath or declaration on their own behalf as required by 37 CFR 1.63 or 1.175 (see MPEP § 602, § 605.01, and § 1414) and (2) make oath or declaration on behalf of the nonsigning joint inventor as required by 37 CFR 1.64. An oath or declaration signed by all the available joint inventors with the signature block of the nonsigning inventor(s) left blank may be treated as having been signed by all the available joint inventors on behalf of the nonsigning inventor(s), unless otherwise indicated. See MPEP 409.03(a).

Further correspondence with respect to this matter should be addressed as follows:

By mail: Mail Stop PETITIONS
Commissioner for Patents
Post Office Box 1450
Alexandria, VA 22313-1450

By hand: Customer Service Window
Mail Stop Petitions
Randolph Building
401 Dulany Street
Alexandria, VA 22314

By fax: (571) 273-8300
ATTN: Office of Petitions

Telephone inquiries should be directed to the undersigned at (571) 272-3215.

Charlema Grant
Petitions Attorney
Office of Petitions

Doc Code: PET.GREEN
Document Description: Petition for Green Tech Pilot

PTO/SB/420 (11-10)
Approved for use through 01/31/2011. OMB 0651-0062
U.S. Patent and Trademark Office; U. S. DEPARTMENT OF COMMERCE
Under the Paperwork Reduction Act of 1995, no persons are required to respond to a collection of information unless it displays a valid OMB control number.

PETITION TO MAKE SPECIAL UNDER THE GREEN TECHNOLOGY PILOT PROGRAM

Attorney Docket Number: 83167834	Application Number (if known): 12/886,660	Filing date: 09-21-2010
First Named Inventor: David Messih		
Title: VEHICLE LOADING BASED VEHICLE DYNAMIC AND SAFETY RELATED CHARACTERISTIC ADJUSTING SYSTEM		

APPLICANT HEREBY REQUESTS TO PARTICIPATE IN THE GREEN TECHNOLOGY PILOT PROGRAM FOR THE ABOVE-IDENTIFIED APPLICATION. See Instruction Sheet on page 2.

This petition must be timely filed electronically using the USPTO electronic filing system, EFS-Web.

1. By filing this petition:

   Applicant is requesting early publication: Applicant hereby requests early publication under 37 CFR 1.219 and the publication fee set forth in 37 CFR 1.18(d) accompanies this request.

2. By filing this petition: applicant is agreeing to make an election without traverse in a telephonic interview and elect an invention that meets the eligibility requirements for the Green Technology Pilot Program, if the Office determines that the claims are not obviously directed to a single invention. See Instruction Sheet.

3. This request is accompanied by statements of special status for the eligibility requirement.

4. The application contains no more than three (3) independent claims and twenty (20) total claims.

5. The application does not contain any multiple dependent claims.

6. Other attachments: _____

Signature /Angela M. Brunetti/	Date 3/21/11
Name (Print/Typed) Angela M. Brunetti	Registration Number 41,647

Note: *Signatures of all the inventors or assignees of record of the entire interest or their representative(s) are required in accordance with 37 CFR 1.33 and 11.18. Please see 37 CFR 1.4(d) for the form of the signature. If necessary, submit multiple forms for more than one signature, see below*.*

☒ *Total of 1 forms are submitted.

The information is required to obtain or retain a benefit by the public which is to file (and by the USPTO to process) an application. Confidentiality is governed by 35 U.S.C. 122 and 37 CFR 1.11 and 1.14. This collection is estimated to take 12 hours to complete, including gathering, preparing, and submitting the completed application form to the USPTO. Time will vary depending upon the individual case. Any comments on the amount of time you require to complete this form and/or suggestions for reducing this burden, should be sent to the Chief Information Officer, U.S. Patent and Trademark Office, U.S. Department of Commerce, P.O. Box 1450, Alexandria, VA 22313-1450. DO NOT SEND FEES OR COMPLETED FORMS TO THIS ADDRESS. **SEND TO: Commissioner for Patents, P.O. Box 1450, Alexandria, VA 22313-1450.**

If you need assistance in completing the form, call 1-800-PTO-9199 and select option 2.

IN THE UNITED STATES PATENT AND TRADEMARK OFFICE

Application No:	12/886,660
Filing Date:	September 21, 2010
Applicant(s):	David Messih, et al.
Confirmation No:	1997
Group Art Unit:	3663
Examiner:	Tuan C. To
Title:	Vehicle Loading Based Vehicle Dynamic And Safety Related Characteristic Adjusting System
Attorney Docket No:	83167834
Customer No:	77327

CERTIFICATE OF MAILING/TRANSMISSION

I hereby certify that this correspondence is, on the date shown below, being electronically filed with the United States Patent & Trademark Office via EFS-Web and a registered e-Filer certificate.

3/21/11 /Lisa E. Brown/
Lisa E. Brown

Commissioner for Patents
P.O. Box 1450
Alexandria, VA 22313-1450

STATEMENT OF SPECIAL STATUS

Applicants respectfully request consideration of the following statement concerning the basis for the special status as well as the following statement pertaining to the materiality standard.

I. Statement concerning the basis for special status.

Applicants submit that special status is sought on the following basis: (1) the claimed invention materially contributes to the more efficient utilization and conservation of energy resources; and/or (2) the claimed invention materially

contributes to greenhouse gas emission reduction; and/or (3) the claimed invention materially enhances the quality of the environment.

II. *Statement pertaining to the materiality standard.*

The claims are directed to a single invention that materially enhances the quality of the environment by contributing to the restoration or maintenance of basic life-sustaining natural elements. The present invention contributes to the more efficient utilization of energy resources through the reduction of energy consumption in combustion systems in that it is directed to a method and/or system to estimate vehicle loading which has a significant influence on vehicle fuel consumption. The present invention detects the amount of loading and the location of the loading.

Please charge any cost incurred in this filing, along with any other costs, to Deposit Account No. 06-1510.

Respectfully submitted,

ANGELA M. BRUNETTI, PLLC

Date: 3/21/11

/Angela M. Brunetti/

Angela M. Brunetti, Registration No. 41,647
3233 Lake Forest Dr.
Sterling Heights, MI 48314
(480) 200-2054

UNITED STATES PATENT AND TRADEMARK OFFICE

UNITED STATES DEPARTMENT OF COMMERCE
United States Patent and Trademark Office
Address: COMMISSIONER FOR PATENTS
P.O. Box 1450
Alexandria, Virginia 22313-1450
www.uspto.gov

APPLICATION NO.	FILING DATE	FIRST NAMED INVENTOR	ATTORNEY DOCKET NO.	CONFIRMATION NO.
12/886,660	09/21/2010	David Messih	83167834	1997

77327 7590 04/11/2011

ANGELA M. BRUNETTI, PLLC
3233 Lake Forest Dr.
Sterling Heights, MI 48314

EXAMINER	
TO, TUAN C	

ART UNIT	PAPER NUMBER
3663	

NOTIFICATION DATE	DELIVERY MODE
04/11/2011	ELECTRONIC

Please find below and/or attached an Office communication concerning this application or proceeding.

The time period for reply, if any, is set in the attached communication.

Notice of the Office communication was sent electronically on above-indicated "Notification Date" to the following e-mail address(es):

ANGELA@I3LAW.COM
LISA@I3LAW.COM

UNITED STATES PATENT AND TRADEMARK OFFICE

Commissioner for Patents
United States Patent and Trademark Office
P.O. Box 1450
Alexandria, VA 22313-1450
www.uspto.gov

APR 0 8 2011

ANGELA M. BRUNETTI, PLLC
3233 Lake Forest Dr.
Sterling Heights MI 48314

In re Application of	:	
David MESSIH et al.	:	DECISION ON PETITION
Application No. 12/886,660	:	TO MAKE SPECIAL UNDER
Filed: September 21 , 2010	:	THE GREEN TECHNOLOGY
Attorney Docket No. 83167834	:	PILOT PROGRAM

This is a decision on the petition under 37 CFR 1.102, filed March 21, 2011 to make the above-identified application special under the pilot program for applications pertaining to Green Technologies as set forth in 74 Federal Register Notice 64666 (December 8, 2009) and amended by 75 Federal Register Notice 28554 (May 21, 2010) and 75 Federal Register Notice 69049 (November 10, 2010).

The petition is **DISMISSED**.

If reconsideration of this decision is desired, a petition for reconsideration must be filed within ONE (1) MONTH OR THIRTY (30) DAYS from the mail date of this decision, whichever is longer. No extension of this time limit can be granted under 37 CFR 1.136(a) or (b). The petition for reconsideration should include an exhaustive attempt to provide the lacking item(s) noted below, since, after a decision on the petition for reconsideration, no further reconsideration or review of the matter will be undertaken by the Director.

A grantable petition to make an application special under 37 CFR 1.102 and the pilot program as set forth in 74 FR 64666 must be directed to a nonprovisional application filed under 35 USC 111(a) or be a national stage entry under 35 USC 371, exclusive of any reissue applications.

In order to qualify for special status, the following requirements must be met. 1) The application must have no more than 3 independent claims and no more than 20 total claims. 2) The application must not contain any multiple dependent claims. 3) The petition must state the basis for seeking special status, i.e., the claimed invention either: A) materially enhances the quality of the environment or B) materially contributes to: i) the discovery or development of renewable energy resources, ii) the more efficient utilization and conservation of energy resources, or iii) greenhouse gas emission reduction. 4) If the disclosure is not clear on its face that the claimed invention materially contributes under category (A) or (B), the petition must be accompanied by a statement by the applicant, assignee, or an attorney/agent registered to practice before the Office explaining how the materiality standard is met. 5) A statement that applicant will agree to make an election without traverse in a telephonic interview

if a restriction requirement is made by the examiner. 6) The petition to make special must be filed electronically. 7) The petition must be filed at least one day prior to the date that a first Office Action appears in the Patent Application Information Retrieval (PAIR) system. 8) The petition must be accompanied by a request for early publication in compliance with 37 CFR 1.219 and include the publication fee as set forth in 37 CFR 1.18(d).

The requirement for a fee for consideration of the petition to make special for applications pertaining to Green Technologies has been waived.

As set forth at numeral 8 in the Requirements section of the Notice, the petition to make special must be accompanied by a request for early publication and the publication fee set forth in 37 CFR 1.18(d). Petitioner's deposit account has been charged the $300 early publication fee in accordance with this notice.

The petition lacks item 4.

In regard to item 4, the disclosure of the application does not explain how a method and system to estimate vehicle loading would reduce fuel consumption. One would argue that a vehicle would consume more fuel to carry a load. There is nothing in the disclosure of the application that explains how the claimed system and method materially enhances the quality of the environment, or materially contributes to the more efficient utilization and conservation of energy resources. As stated in the notice, the materiality standard does not permit an applicant to speculate as to how a hypothetical end-user might specially apply the invention in a manner than could materially contribute to category (A) or (B). *Also see MPEP § 708.02 (VI).* Accordingly, as there is no materiality statement, it is unclear as to how the claimed invention would materially contribute to category (A) or (B), and it is not agreed that the application on its face meets that materiality standard.

Any reconsideration of this decision should be submitted through the USPTO electronic filing system, EFS-Web, and selecting the document description of "Petition for Green Tech Pilot" on the EFS-Web screen.

Telephone inquiries concerning this decision should be directed to Lanna Mai at 571-272-6867.

The application is being forwarded to the Technology Center Art Unit 3663 for action in its regular turn.

/Lanna Mai/

Lanna Mai
Quality Assurance Specialist
Technology Center 3600

Doc Code: PPH.PCT.652
Document Description: Petition to make special under PCT-Patent Pros Hwy

PTO/SB/20PCT-KR (06-10)
Approved for use through 01/31/2012. OMB 0651-0058
U.S. Patent and Trademark Office; U. S. DEPARTMENT OF COMMERCE
Under the Paperwork Reduction Act of 1995, no persons are required to respond to a collection of information unless it displays a valid OMB control number.

REQUEST FOR PARTICIPATION IN THE PATENT COOPERATION TREATY - PATENT PROSECUTION HIGHWAY (PCT-PPH) PILOT PROGRAM BETWEEN THE KOREAN INTELLECTUAL PROPERTY OFFICE (KIPO) AND THE USPTO

Application No:	12/886,726	Filing date:	September 21, 2010
First Named Inventor:	Jin Young CHUN		
Title of the Invention:	Method and Apparatus for transmitting Uplink Control Signal in Relay Station Cross-Reference to Related Applications		

THIS REQUEST FOR PARTICIPATION IN THE PCT-PPH PILOT PROGRAM ALONG WITH THE REQUIRED DOCUMENTS MUST BE SUBMITTED VIA EFS-WEB. INFORMATION REGARDING EFS-WEB IS AVAILABLE AT HTTP://WWW.USPTO.GOV/EBC/EFS_HELP.HTML

APPLICANT HEREBY REQUESTS PARTICIPATION IN THE PCT-PPH PROGRAM AND PETITIONS TO MAKE THE ABOVE-IDENTIFIED APPLICATION SPECIAL UNDER THE PCT-PPH PROGRAM.

The above-identified application is (1) a national stage entry of the corresponding PCT application, or (2) a national stage entry of another PCT application which claims priority to the corresponding PCT application, or (3) a national application that claims domestic/ foreign priority to the corresponding PCT application, or (4) a national application which forms the basis for the priority claim in the corresponding PCT application, or (5) a continuing application of a U.S. application that satisfies one of (1) to (4) above, or (6) a U.S. application that claims domestic benefit to a U.S. provisional application which forms the basis for the priority claim in the corresponding PCT application.

The corresponding PCT application number(s) is/are: PCT/KR2010/006337

The international filing date of the corresponding PCT application(s) is/are:
16 SEPT 2010

I. List of Required Documents:

a. **A copy of the latest international work product (WO/ISA, WO/IPEA, or IPER) in the above–identified corresponding PCT application(s)**

☑ Is attached.

☐ Is not attached because the document is already in the U.S. application.

b. **A copy of all claims which were indicated as having novelty, inventive step and industrial applicability in the above-identified corresponding PCT application(s).**

☑ Is attached.

☐ Is not attached because the document is already in the U.S. application.

c. **English translations of the documents in a. and b. above are attached (if the documents are not in the English language). A statement that the English translation is accurate is attached for the document in b. above.**

This collection of information is required by 35 U.S.C. 119, 37 CFR 1.55, and 37 CFR 1.102(d). The information is required to obtain or retain a benefit by the public, which is to file (and by the USPTO to process) an application. Confidentiality is governed by 35 U.S.C. 122 and 37 CFR 1.11 and 1.14. This collection is estimated to take 2 hours to complete, including gathering, preparing, and submitting the completed application form to the USPTO. Time will vary depending upon the individual case. Any comments on the amount of time you require to complete this form and/or suggestions for reducing this burden should be sent to the Chief Information Officer, U.S. Patent and Trademark Office, U.S. Department of Commerce, P.O. Box 1450, Alexandria, VA 22313-1450. DO NOT SEND FEES OR COMPLETED FORMS TO THIS ADDRESS.

REQUEST FOR PARTICIPATION IN THE PCT-PPH PILOT PROGRAM BETWEEN THE KIPO AND THE USPTO

(continued)

Application No.:	12/886,726
First Named Inventor:	Jin Young CHIN

d. **(1) An information disclosure statement listing the documents cited in the international work products (ISR, WO/ISA, WO/IPEA, IPER) of the corresponding PCT application.**

☑ Is attached

☐ Has already been filed in the above-identified U.S. application on _____

(2) Copies of all documents (except) for U.S. patents or U.S. patent application publications)

☑ Are attached.

☐ Have already been filed in the above-identified U.S. application on _____

II. Claims Correspondence Table:

Claims in US Application	Patentable Claims in the corresponding PCT Application	Explanation regarding the correspondence
1-18	1-18	Same

III. All the claims in the US application sufficiently correspond to the patentable claims in the corresponding PCT application.

Signature /Robert J. Goodell/	Date 2011-06-24
Name (Print/Typed) Robert J. Goodell	Registration Number 41,040

UNITED STATES PATENT AND TRADEMARK OFFICE

UNITED STATES DEPARTMENT OF COMMERCE
United States Patent and Trademark Office
Address: COMMISSIONER FOR PATENTS
P.O. Box 1450
Alexandria, Virginia 22313-1450
www.uspto.gov

APPLICATION NO.	FILING DATE	FIRST NAMED INVENTOR	ATTORNEY DOCKET NO.	CONFIRMATION NO.
12/886,726	09/21/2010	Jin Young Chun	002027-5007 US	1128

9629 7590 08/03/2011

MORGAN LEWIS & BOCKIUS LLP (WA)
1111 PENNSYLVANIA AVENUE NW
WASHINGTON, DC 20004

EXAMINER	
MAUNG, NAY AUNG	
ART UNIT	**PAPER NUMBER**
2618	

MAIL DATE	DELIVERY MODE
08/03/2011	PAPER

Please find below and/or attached an Office communication concerning this application or proceeding.

The time period for reply, if any, is set in the attached communication.

UNITED STATES PATENT AND TRADEMARK OFFICE

Commissioner for Patents
United States Patent and Trademark Office
P.O. Box 1450
Alexandria, VA 22313-1450
www.uspto.gov

MORGAN LEWIS & BOCKIUS LLP (WA)
1111 PENNSYLVANIA AVENUE NW
WASHINGTON DC 20004

In re Application of
CHUN et al.
Application No.: 12/886,726
Filed: 21 September 2010
Attorney Docket No.: 002027-5007 US
For: METHOD AND APPARATUS FOR TRANSMITTING AND RECEIVING SIGNAL IN RELAY STATION

: DECISION ON REQUEST TO
: PARTICIPATE IN THE PATENT
: PROSECUTION HIGHWAY
: PROGRAM AND PETITION
: TO MAKE SPECIAL UNDER
: 37 CFR 1.102(a)

This is a decision on the request to participate in the PCT Patent Prosecution Highway (PCT-PPH) pilot program and the petition under 37 CFR 1.102(a), filed on 24 June 2011, to make the above-identified application special.

The request and petition are **DISMISSED**.

Discussion

A grantable request to participate in the PCT-PPH pilot program and petition to make special require:

(1) The U.S. application must have an eligible relationship to one or more PCT applications where the ISA or IPEA are the JPO, EPO, KIPO, IPAU, Russia, Spain, Finland, Austria, or USPTO;

(2) At least one claim in the PCT application has novelty, inventive step, and industrial applicability and must be free of any observations in Box VIII in the latest work product in the international stage or applicant must identify and explain why the claim(s) is/are not subject to the observation in Box VIII;

(3) Applicant must submit a copy of the claim(s) from the PCT application(s) that have novelty, inventive step, and industrial applicability along with an English translation thereof and a statement that the English translation is accurate, if the claims are not in the English language;

(4) All the claims in the U.S. application must sufficiently correspond or be amended to sufficiently correspond to the claim(s) that have novelty, inventive step, and industrial applicability in the PCT application(s);

(5) Examination of the U.S. application has not begun;

(6) Applicant must submit a copy of the latest international work product from the PCT application indicating that the claim(s) have novelty, inventive step, and industrial applicability along with an English translation thereof.

(7) Applicant must submit an IDS listing the documents cited by the PCT examiner in the international work product along with copies of documents except U.S. patents or U.S. patent application publications.

(8) Applicant is required to submit a claims correspondence table in English which indicates how all the claims in the U.S. application correspond to the claims indicated as having novelty, inventive step and industrial applicability in the latest international work product.

Requirements (1-2), (5), and (7-8) above are considered to have been met. However, the request to participate in the PPH pilot program and petition fail to meet requirements (1) and (3).

Regarding the requirement of condition (1), requirement (1) does not appear to be met since the instant application does not claim priority to PCT/KR2010/006337.

Regarding the requirement of condition (3), applicant has failed to submit a copy of the claims from the PCT applications that have novelty, inventive step, and industrial applicability along with an English translation and a statement that the English translation is accurate if the claims were not in English.

Regarding the requirement of condition (4), it cannot be determined if requirement (4) has been met since requirement (3) has not been met.

Applicant is given **ONE** opportunity within a time period of **ONE MONTH or THIRTY DAYS**, whichever is longer, from the mailing date of this decision to correct the deficiencies. **NO EXTENSION OF TIME UNDER 37 CFR 1.136 IS PERMITTED.** If the deficiencies are not corrected with the time period given, the application will await action in its regular turn.

Response must be filed via the Electronic Filing System (EFS) using the document description: Petition to make special under PCT – Patent Pros Hwy. Any preliminary amendments and IDS submitted with the PPH documents must be separately indexed as a preliminary amendment and IDS, respectively.

Telephone inquiries concerning this decision should be directed to Lee W. Young at 571-272-4549.

All other inquiries concerning the examination or status of the application is accessible in the PAIR system at http://www.uspto.gov/ebc/index.html.

Lee W. Young
Quality Assurance Specialist
Technology Center 2600

PATENT
ATTORNEY DOCKET NO.: 002027-5007

IN THE UNITED STATES PATENT AND TRADEMARK OFFICE

In re Patent Application of:	)	
	)	
Jin Young CHUN et al.	)	Confirmation No.: 1128
	)	
Application No.: 12/886,726	)	Group Art Unit: 2618
	)	
Filed: September 21, 2010	)	Examiner: Nay Aung Maung
	)	
For: THREE-DIMENSIONAL IMAGE DISPLAY DEVICE AND METHOD OF DRIVING THE SAME	)	

RESPONSE TO DECISION ON REQUEST FOR PARTICIPATION IN PCT PPH AND RENEWED REQUEST

On August 3, 2011, a Decision was mailed by the USPTO dismissing the request for participation in the PCT PPH pilot program. The Decision indicates that Applicants are given one opportunity within a time period of one month or thirty days, whichever is longer from the mailing date of the decision to correct the deficiencies. Thus, Applicants submit this paper within such time period.

First, the Decision asserts that the instant application does not meet requirement (1) for an eligible relationship because the present application does not claim benefit to PCT/KR2010/006337. Applicants respectfully disagree. While the present application does not claim benefit to PCT/KR2010/006337, Applicants assert that there is an eligible relationship as set forth in 1355 OG 319. [http://www.uspto.gov/patents/law/notices/pct_pph_kipo.pdf or http://www.uspto.gov/web/offices/com/sol/og/2010/week26/TOC.htm#ref12] Applicants believe that scenario E2 describes the present relationship. The Office is directed to pages 8 and 9 of the attached OG Notice.

Second, the Decision indicates that a copy of the claims that were indicated as having novelty, inventive step and industrial application were not submitted. Applicants attach herewith a copy of the PCT Published Application for the corresponding PCT application serving as the basis of the PCT PPH Request. The PCT Published Application has the claims that were indicated as having novelty, inventive step and industrial application. The PCT application -- including the claims -- are in English, and therefore, no translation is required.

If for any reason the Office cannot accept this paper as a response to correct the deficiencies or a renewed petition, then the Office is requested to accept this paper as a new Request for Participation in the PCT PPH.

Applicants believe that no fees are due in connection with the filing of this paper. However, if any fees are deemed to be due, such fees may be charged to Deposit Account No. 50-0310.

Respectfully submitted,

MORGAN, LEWIS & BOCKIUS LLP

By: /Robert J. Goodell/
Robert J. Goodell
Reg. No. 41,040

Dated: August 30, 2011

CUSTOMER NO. 009629
MORGAN, LEWIS & BOCKIUS LLP
1111 Pennsylvania Avenue, NW
Washington, D.C. 20004
Tel.: (202) 739-3000
Fax: (202) 739-3001

Doc Code: PPH.PCT.652
Document Description: Petition to make special under PCT-Patent Pros Hwy

PTO/SB/20PCT-KR (06-10)
Approved for use through 01/31/2012. OMB 0651-0058
U.S. Patent and Trademark Office; U. S. DEPARTMENT OF COMMERCE
Under the Paperwork Reduction Act of 1995, no persons are required to respond to a collection of information unless it displays a valid OMB control number.

REQUEST FOR PARTICIPATION IN THE PATENT COOPERATION TREATY - PATENT PROSECUTION HIGHWAY (PCT-PPH) PILOT PROGRAM BETWEEN THE KOREAN INTELLECTUAL PROPERTY OFFICE (KIPO) AND THE USPTO

Application No:	12/886,726	Filing date:	September 21, 2010
First Named Inventor:	Jin Young CHUN		
Title of the Invention:	Method and Apparatus for transmitting Uplink Control Signal in Relay Station Cross-Reference to Related Applications		

THIS REQUEST FOR PARTICIPATION IN THE PCT-PPH PILOT PROGRAM ALONG WITH THE REQUIRED DOCUMENTS MUST BE SUBMITTED VIA EFS-WEB. INFORMATION REGARDING EFS-WEB IS AVAILABLE AT HTTP://WWW.USPTO.GOV/EBC/EFS_HELP.HTML

APPLICANT HEREBY REQUESTS PARTICIPATION IN THE PCT-PPH PROGRAM AND PETITIONS TO MAKE THE ABOVE-IDENTIFIED APPLICATION SPECIAL UNDER THE PCT-PPH PROGRAM.

The above-identified application is (1) a national stage entry of the corresponding PCT application, or (2) a national stage entry of another PCT application which claims priority to the corresponding PCT application, or (3) a national application that claims domestic/ foreign priority to the corresponding PCT application, or (4) a national application which forms the basis for the priority claim in the corresponding PCT application, or (5) a continuing application of a U.S. application that satisfies one of (1) to (4) above, or (6) a U.S. application that claims domestic benefit to a U.S. provisional application which forms the basis for the priority claim in the corresponding PCT application.

The corresponding PCT application number(s) is/are: PCT/KR2010/006337

The international filing date of the corresponding PCT application(s) is/are: 16 SEPT 2010

I. List of Required Documents:

a. **A copy of the latest international work product (WO/ISA, WO/IPEA, or IPER) in the above–identified corresponding PCT application(s)**

☑ Is attached.

☐ Is not attached because the document is already in the U.S. application.

b. **A copy of all claims which were indicated as having novelty, inventive step and industrial applicability in the above-identified corresponding PCT application(s).**

☑ Is attached.

☐ Is not attached because the document is already in the U.S. application.

c. **English translations of the documents in a. and b. above are attached (if the documents are not in the English language). A statement that the English translation is accurate is attached for the document in b. above.**

This collection of information is required by 35 U.S.C. 119, 37 CFR 1.55, and 37 CFR 1.102(d). The information is required to obtain or retain a benefit by the public, which is to file (and by the USPTO to process) an application. Confidentiality is governed by 35 U.S.C. 122 and 37 CFR 1.11 and 1.14. This collection is estimated to take 2 hours to complete, including gathering, preparing, and submitting the completed application form to the USPTO. Time will vary depending upon the individual case. Any comments on the amount of time you require to complete this form and/or suggestions for reducing this burden should be sent to the Chief Information Officer, U.S. Patent and Trademark Office, U.S. Department of Commerce, P.O. Box 1450, Alexandria, VA 22313-1450. DO NOT SEND FEES OR COMPLETED FORMS TO THIS ADDRESS.

PTO/SB/20PCT-KR (06-10)
Approved for use through 01/31/2012. OMB 0651-0058
U.S.Patent and Trademark Office; U.S. DEPARTMENT OF COMMERCE
Under the Paperwork Reduction Act of 1995, no persons are required to respond to a collection of information unless it displays a valid OMB control number.

REQUEST FOR PARTICIPATION IN THE PCT-PPH PILOT PROGRAM BETWEEN THE KIPO AND THE USPTO

(continued)

Application No.:	12/886,726
First Named Inventor:	Jin Young CHIN

d. **(1) An information disclosure statement listing the documents cited in the international work products (ISR, WO/ISA, WO/IPEA, IPER) of the corresponding PCT application.**

☐ Is attached

☑ Has already been filed in the above-identified U.S. application on June 24, 2011

(2) Copies of all documents (except) for U.S. patents or U.S. patent application publications)

☐ Are attached.

☑ Have already been filed in the above-identified U.S. application on June 24, 2011

II. Claims Correspondence Table:

Claims in US Application	Patentable Claims in the corresponding PCT Application	Explanation regarding the correspondence
1-18	1-18	Same

III. All the claims in the US application sufficiently correspond to the patentable claims in the corresponding PCT application.

Signature /Robert J. Goodell/	Date 2011-08-30
Name (Print/Typed) Robert J. Goodell	Registration Number 41,040

Patent Prosecution Highway Pilot Program between the United States Patent and Trademark Office and the Korean Intellectual Property Office based on Patent Cooperation Treaty Work Products

I. Background

The United States Patent and Trademark Office (USPTO) and the Korean Intellectual Property Office (KIPO) began full implementation of a Patent Prosecution Highway (PPH) program on January 29, 2009. See "Notice Regarding Full Implementation of Patent Prosecution Highway Program between the United States Patent and Trademark Office and the Korean Intellectual Property Office," published on February 24, 2009, at 1339 OG 155. Under the prior PPH program, an applicant receiving a determination from the KIPO that at least one claim in a Korean application is allowable/patentable may request that a corresponding application filed in the USPTO be accorded special status and be advanced out of turn for examination. The prior PPH program was limited to the utilization of search and examination results of national applications between cross filings under the Paris Convention.

In order to expand the potential of the PPH program, the USPTO recently implemented a new PPH pilot program with our Trilateral partners, the European Patent Office (EPO) and the Japan Patent Office (JPO), based on Patent Cooperation Treaty (PCT) work products (PCT-PPH pilot program). The USPTO had discussions with the KIPO to launch a PCT-PPH pilot program similar to the PCT-PPH pilot programs between the USPTO and EPO and between the USPTO and JPO. USPTO and KIPO agreed that consistency between PCT-PPH pilot programs should be maintained to the extent possible, to avoid creating burdens on applicants and offices, and to ensure maximum work-sharing potential.

II. PCT-PPH Pilot Program

The PCT-PPH pilot program was established to enable an applicant, who has received
(1) a Written Opinion from an International Searching Authority (WO/ISA) (ISA must be the KIPO or the USPTO), or
(2) a Written Opinion from an International Preliminary Examining Authority (WO/IPEA) (IPEA must be the KIPO or the USPTO), or
(3) an International Preliminary Examination Report (IPER) from an International Preliminary Examining Authority (IPEA must be the KIPO or the USPTO), that indicates at least one claim in the PCT application has novelty, inventive step and industrial applicability, to file a request to participate in the PCT-PPH pilot program in a corresponding U.S. application and petition to make the U.S. application special under the PCT-PPH pilot program. Note that the procedures for a petition to make special under the accelerated examination program set forth in MPEP 708.02(a) do NOT apply to a petition to make special under the PCT-PPH pilot program. The procedures and requirements for filing a request in the USPTO for participation in the PCT-PPH pilot program are set forth below.

A. Trial Period for the PCT-PPH Pilot Program

USPTO and KIPO agreed that the PCT-PPH pilot program will commence in the USPTO on June 1, 2010. KIPO will start the PCT-PPH pilot program at a later date once preparation to implement the PCT-PPH pilot program in KIPO is complete. KIPO will publish a notice on its Web site announcing the commencement of the PCT-PPH pilot program in KIPO at a later date. The trial period for the PCT-PPH pilot program for will end on May 31, 2012. The trial period may be extended if necessary until the USPTO and the KIPO receive a sufficient number of PPH requests to adequately assess the feasibility of the PCT-PPH pilot program. The USPTO and the KIPO may also terminate the PCT-PPH pilot program early if the volume of participation exceeds a manageable level, or for any other reasons. Notice will be published if the PCT-PPH pilot program will be terminated before the May 31, 2012 date.

B. Requirements for Requesting Participation in the PCT-PPH Pilot Program in the USPTO

In order to be eligible to participate in the PCT-PPH pilot program, the following conditions must be met:

(1) The relationship between the corresponding U.S. application for which participation in the PCT-PPH pilot program is requested and the PCT application satisfies one of the following requirements (note that RO/-- as used in the diagrams below refers to an international application filed under the PCT in any competent receiving office):

(a) The U.S. application is a national stage entry of the corresponding PCT application. See diagrams (A), (A') and (A") below.

(A) The U.S. application is a national stage entry of the corresponding PCT application.

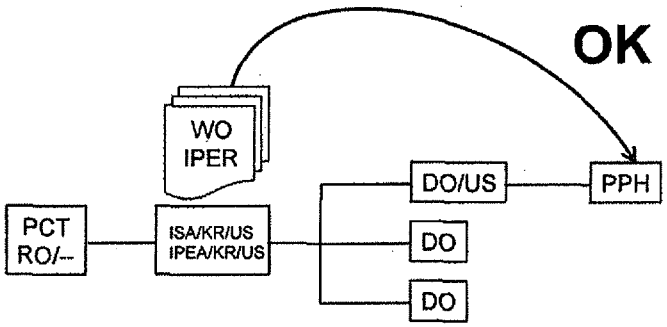

(A') The U.S. application is a national stage entry of the corresponding PCT application.

(The corresponding PCT application claims priority to a national application filed anywhere.)

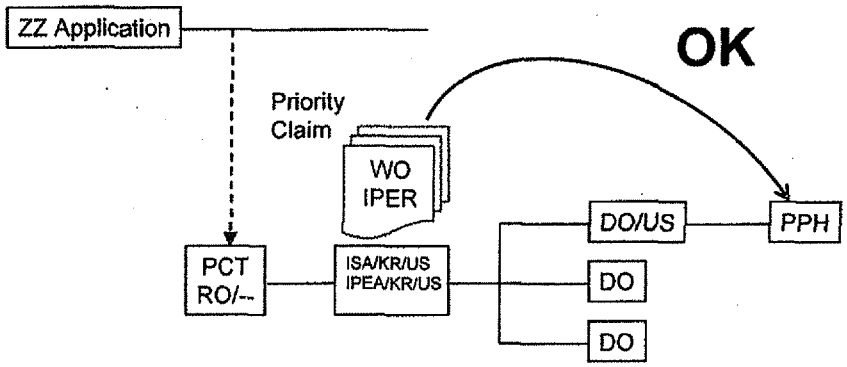

(A") The U.S. application is a national stage entry of the corresponding PCT application.
(The corresponding PCT application claims priority to another PCT application.)

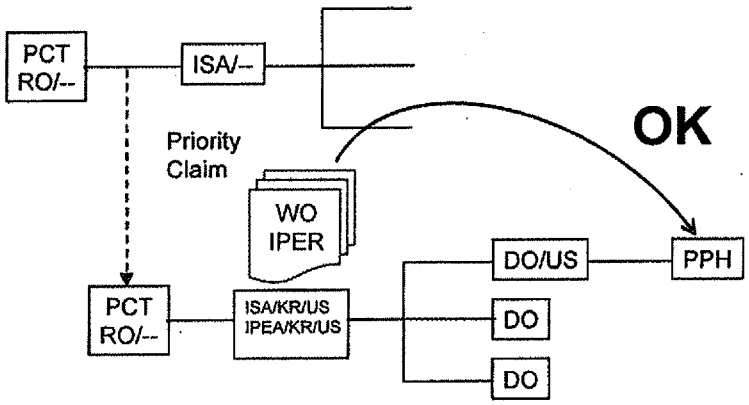

(b) The U.S. application is a national application which forms the basis for the priority claim in the corresponding PCT application. See diagram (B) below.

Provisional applications, plant applications, design applications, reissue applications and applications subject to a secrecy order (35 U.S.C. 181) are excluded and not subject to participation in the PCT-PPH pilot program.

(B) The U.S. application is a national application which forms the basis for the priority claim in the corresponding PCT application.

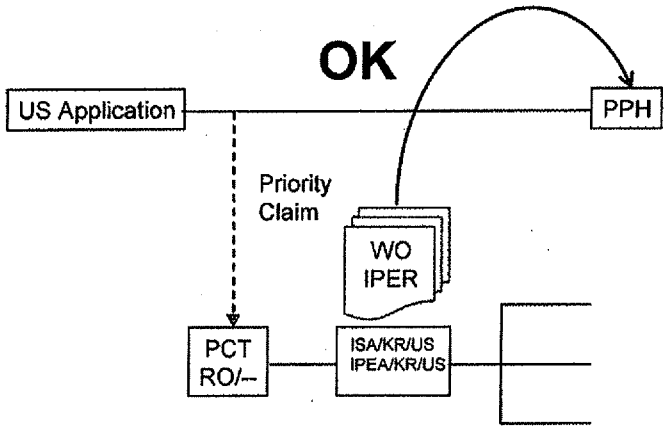

(c) The U.S. application is a national stage entry of another PCT application (which can be filed in any competent receiving office) which claims priority to the corresponding PCT application. See diagram (C) below.

(C) The U.S. application is a national stage entry of a PCT application which claims priority to the corresponding PCT application.

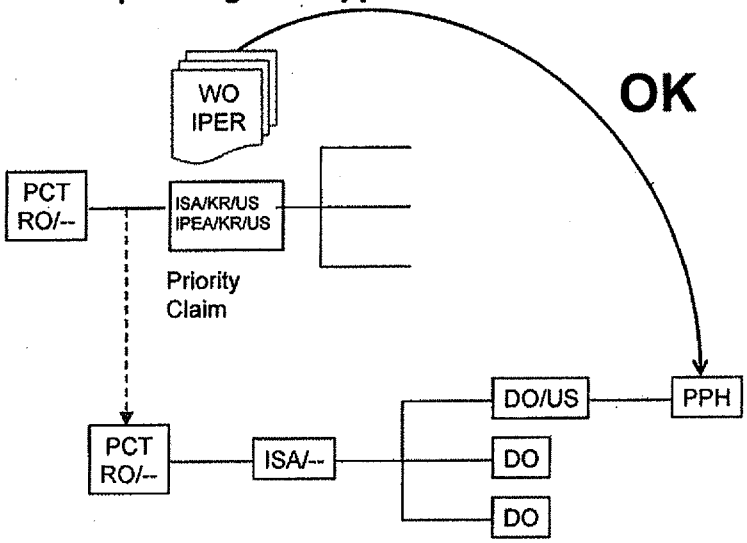

(d) The U.S. application is a national application claiming foreign/domestic priority to the corresponding PCT application. See diagram (D) below.

Design applications and applications subject to a secrecy order (35 U.S.C. 181) are excluded and not subject to participation in the PCT-PPH pilot program.

(D) The U.S. application is a national application claiming foreign/domestic priority to the corresponding PCT application.

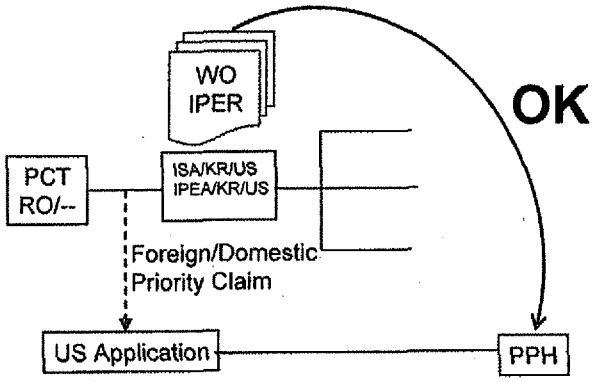

(e) The U.S. application is a continuing application (continuation, divisional, or continuation-in-part) of the U.S. application which satisfies one of the above (a) through (d) scenarios. See diagrams (E1) and (E2) below.

Plant applications, design applications and applications subject to a secrecy order (35 U.S.C. 181) are excluded and not subject to participation in the PCT-PPH pilot program.

(E1) The U.S. application is a continuing application of an application which satisfies the requirement (a).

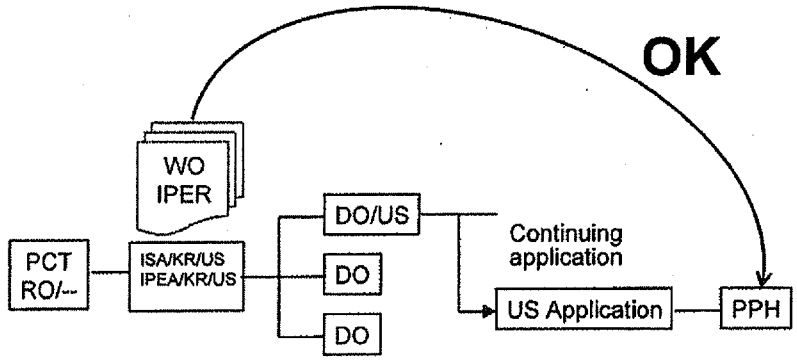

(E2) The U.S. application (US2) is an application claiming Domestic priority to an application (US1) which satisfies the requirement (b).

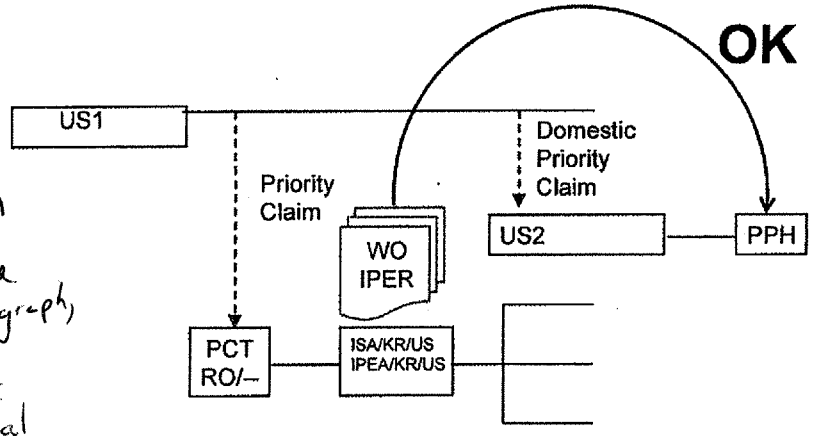

In accordance with next paragraph, US1 may be a provisional

In diagram (E2), US2 application may be a non-provisional application claiming benefit under 35 U.S.C. 119(e) to a provisional application (US1).

(2) The latest work product in the international phase of the PCT application corresponding to the U.S. application, namely, the WO/ISA, or the WO/IPEA, or the IPER, indicates at least one claim in the PCT application has novelty, inventive step and industrial applicability. In case any observation is described in Box VIII of the WO/ISA, WO/IPEA, or IPER which forms the basis for the PCT-PPH request, applicant must identify and explain why the claim(s) is/are not subject to any observation described in Box VIII irrespective of whether an amendment is submitted to correct the observation described in Box VIII. The U.S. application will not be eligible to participate in the PCT-PPH pilot program if applicant does not identify and explain why the claim(s) is/are not subject to the observation described in Box VIII.

Note that the ISA and the IPEA which produced the WO/ISA, WO/IPEA and the IPER are limited to the KIPO or the USPTO.

Applicant may not file a request to participate in the PCT-PPH pilot program on the basis of an International Search Report (ISR) only.

(3) Claim Correspondence

(a) All of the claims in each U.S. application for which a request for participation in the PCT-PPH pilot program is made must sufficiently correspond to or be amended to sufficiently correspond to one or more of those claims indicated as having novelty, inventive step and industrial applicability and be free of any observation described in Box VIII in the latest work product of the corresponding PCT application.

(b) Claims are considered to "sufficiently correspond" where, accounting for differences due to translations and claim format requirements, the claims in the U.S. application are of the same or similar scope as the claims indicated as having novelty, inventive step and industrial applicability and free of any observation described in Box VIII in the latest work product of the corresponding PCT application, or the claims in the U.S. application are narrower in scope than the claims indicated as having novelty, inventive step and industrial applicability and free of any observation described in Box VIII in the latest work product of the corresponding PCT application.

(c) In this regard, a claim that is narrower in scope occurs when a claim indicated as having novelty, inventive step and industrial applicability and free of any observation described in Box VIII in the latest work product of the corresponding PCT application is amended to be further limited by an additional feature that is supported in the written description of the U.S. application. The claim(s) with the narrower scope must be written in dependent form in the U.S. application for which participation in the PCT-PPH pilot program is requested.

(4) Substantive examination of the U.S. application for which participation in the PCT-PPH pilot program is requested has not begun.

(5) Applicant must file a request for participation in the PCT-PPH pilot program and a request that the U.S. application be advanced out of turn for examination by order of the Director to expedite the business of the Office under 37 CFR 1.102(a). A sample request form (PTO/SB/20PCT-KR) will be available from the USPTO Web site at http://www.uspto.gov on June 1, 2010. Applicants are encouraged to use the USPTO request form. A petition fee under 37 CFR 1.17(h) is NOT required. See Notice Regarding the Elimination of the Fee for Petitions To Make Special Filed Under the Patent Prosecution Highway (PPH) Programs, 75 FR 29312 (May 25, 2010).

(6) Unless already filed in the U.S. application for which participation in the PCT-PPH pilot program is requested, applicant must submit a copy of the latest international work product, WO/ISA, or WO/IPEA or IPER, which indicated that the claim(s) has/have novelty, inventive step and industrial applicability along with an English translation thereof if the copy of the latest international work product is not in the English language. A statement that the English translation is accurate is not required. Where the required documents have been previously filed in the U.S. application, applicant may simply refer to these documents and indicate in the request for participation in the PCT-PPH pilot program when these documents were previously filed in the U.S. application. Where the U.S. application and the corresponding PCT application satisfy the relationship noted in B.(1)(a) above, applicant need not submit a copy of the latest international work product along with an English translation thereof since a copy of these documents is already contained in the file wrapper of the U.S. application.

(7) Unless already filed in the U.S. application for which participation in the PCT-PPH pilot program is requested, applicant must submit a copy of the claims from the corresponding PCT application which were indicated as having novelty, inventive step and industrial applicability in the latest work product of the PCT application along with an English translation thereof and a statement that the English translation is accurate if the claims are not in the English language. Where the required documents have been previously filed in the U.S. application, applicant may simply refer to these documents and indicate in the request for participation in the PCT-PPH pilot program when these documents were previously filed in the U.S. application. If the claims in the U.S. application for which participation in the PCT-PPH pilot program is requested are identical to the claims from the corresponding PCT application, and are in the English language, applicant may just indicate such in the PCT-PPH request and it will not be necessary for applicant to submit a copy of the claims from the corresponding PCT application.

(8) Applicant is required to submit a claims correspondence table in English. The claims correspondence table must indicate how all the claims in the U.S. application sufficiently correspond to the claims indicated as having novelty, inventive step and industrial applicability in the latest international work product.

(9) Applicant must submit an information disclosure statement (IDS) listing the documents cited in the international work products (ISR, WO/ISA, WO/IPEA, IPER) of the PCT application corresponding to the U.S. application for which participation in the PCT-PPH pilot program is requested (unless such an IDS has already been filed in the U.S. application, in which case applicant may simply refer to the previously filed IDS and indicate in the request for participation in the PCT-PPH pilot program when the IDS was previously filed in the U.S. application). Applicant must submit copies of all the documents cited in the international work products of the PCT application corresponding to the U.S. application (unless the copies have already been filed in the U.S. application, in which case applicant may simply refer to the previously filed copies of the documents and indicate in the request for participation in the PCT-PPH pilot program when the copies were previously filed in the U.S. application) except U.S. patents or U.S. patent application publications.

(10) The request for participation in the PCT-PPH pilot program and all the supporting documents must be submitted to the USPTO via EFS-Web and indexed with the following document description: "Petition to make special under PCT-Patent Pros Hwy." Information regarding EFS-Web is available at http://www.uspto.gov/ebc/efs_help.html. Any preliminary amendments and IDS submitted with the PCT-PPH documents must be separately indexed as a preliminary amendment and IDS, respectively.

Where the request for participation in the PCT-PPH pilot program and special status are granted, applicant will be notified and the U.S. application will be advanced out of turn for examination. In those instances where the request for participation in the PCT-PPH pilot program does not meet all the requirements set forth above, applicant will be notified and the defects in the request will be identified. Applicant will be given one opportunity to perfect the request in a renewed request for participation (which must be submitted via EFS-Web and indexed accordingly as noted above). Note that action on the application by the examiner will NOT be suspended (37 CFR 1.103) awaiting a reply by the applicant to perfect the request in a renewed request for participation. That is, if the application is picked up for examination by the examiner after applicant has been notified of the defects in the request, any renewed request will be dismissed. If the renewed request is perfected and examination has not begun, the request and special status will be granted, applicant will be notified and the U.S. application will be advanced out of turn for examination. If not perfected, applicant will be notified and the application will await action in its regular turn.

Request for participation in the PPH pilot program and special status granted in a parent application will not carry over to a continuing application. Applicant must fulfill all the conditions set forth above in order for special status to be granted in the continuing application.

C. Special Examining Procedures

Once the request for participation in the PCT-PPH pilot program and special status have been granted to the U.S. application, the U.S. application will be taken up for examination by the U.S. examiner before all other categories of applications except those clearly in condition for allowance, those with set time limits, such as examiner's answers, and those that have been granted special status for "accelerated examination."

Any claims amended or added after the grant of the request for participation in the PCT-PPH pilot program must "sufficiently correspond" to the claims indicated as having novelty, inventive step and industrial applicability in the latest work product of the corresponding PCT application. See the definition of "sufficient correspondence" in II.B.(3) above. Applicant is required to submit a claims correspondence table along with the amendment (see II.B.(8) above). If the amended or newly added claims do not sufficiently correspond to the claims indicated as having novelty, inventive step and industrial applicability in the latest work product of the corresponding PCT application, the amendment will not be entered and will be treated as a non-responsive reply.

The PCT-PPH program does not absolve applicants of all their duties under 37 CFR 1.56 and 37 CFR 11.18. By complying with requirements II.B.(6) and (9) identified above, applicants would be considered to have complied with their duties to bring to the attention of the USPTO any material prior art cited in the corresponding PCT application (see MPEP § 2001.06(a)). Applicants still have a duty of candor and good faith, including providing to the USPTO other information known to them to be material to patentability.

Any inquiries concerning this notice may be directed to Magdalen Greenlief, Office of the Associate Commissioner for Patent Examination Policy, at 571-272-8800 or at magdalen.greenlief@uspto.gov.

Date: 6/2/10

David J. Kappos
Under Secretary of Commerce for Intellectual Property and
Director of the United States Patent and Trademark Office

PATENT COOPERATION TREATY

From the INTERNATIONAL SEARCHING AUTHORITY

To:

YANG Moon Ock

ESSEN Patent & Law Firm 2F, Samheung Yeoksam Bldg. 735-10 Yeoksam-dong Gangnam-gu seoul 135-080 Republic of Korea

PCT

NOTIFICATION OF TRANSMITTAL OF THE INTERNATIONAL SEARCH REPORT AND THE WRITTEN OPINION OF THE INTERNATIONAL SEARCHING AUTHORITY, OR THE DECLARATION

(PCT Rule 44.1)

Date of mailing *(day/month/year)* 23 MAY 2011 (23.05.2011)	
Applicant's or agent's file reference BPP2010-0161	**FOR FURTHER ACTION** See paragraphs 1 and 4 below
International application No. **PCT/KR2010/006337**	International filing date *(day/month/year)* **16 SEPTEMBER 2010 (16.09.2010)**
Applicant **LG ELECTRONICS INC. et al**	

1. ☒ The applicant is hereby notified that the international search report and the written opinion of the International Searching Authority have been established and are transmitted herewith.

Filing of amendments and statement under Article 19:

The applicant is entitled, if he so wishes, to amend the claims of the international application (see Rule 46):

When? The time limit for filing such amendments is normally two months from the date of transmittal of the international search report.

Where? Directly to the International Bureau of WIPO, 34 chemin des Colombettes 1211 Geneva 20, Switzerland, Facsimile No.: +41 22 338 82 70

For more detailed instructions, see *PCT Applicant's Guide*, International Phase, paragraphs 9.004 . 9.011.

2. ☐ The applicant is hereby notified that no international search report will be established and that the declaration under Article 17(2)(a) to that effect and the written opinion of the International Searching Authority are transmitted herewith.

3. ☐ **With regard to any protest** against payment of (an) additional fee(s) under Rule 40.2, the applicant is notified that:

☐ the protest together with the decision thereon has been transmitted to the International Bureau together with any request to forward the texts of both the protest and the decision thereon to the designated Offices.

☐ no decision has been made yet on the protest; the applicant will be notified as soon as a decision is made.

4. **Reminders**

The applicant may submit comments on an informal basis on the written opinion of the International Searching Authority to the International Bureau. The International Bureau will send a copy of such comments to all designated Offices unless an international preliminary examination report has been or is to be established. Following the expiration of 30 months from the priority date, these comments will also be made available to the public.

Shortly after the expiration of **18 months** from the priority date, the international application will be published by the International Bureau. If the applicant wishes to avoid or postpone publication, a notice of withdrawal of the international application, or of the priority claim, must reach the International Bureau before the completion of the technical preparations for international publication (Rules 90bis.1 and 90bis.3).

Within **19 months** from the priority date, but only in respect of some designated Offices, a demand for international preliminary examination must be filed if the applicant wishes to postpone the entry into the national phase **until 30 months** from the priority date (in some Offices even later); otherwise, the applicant must, **within 20 months** from the priority date, perform the prescribed acts for entry into the national phase before those designated Offices.

In respect of other designated Offices, the time limit of **30 months** (or later) will apply even if no demand is filed within 19months.

For details about the applicable time limits, Office by Office, see www.wipo.int/pct/en/texts/time_limits.html and the PCT Applicant's Guide, National Chapters.

Name and mailing address of the ISA/KR Korean Intellectual Property Office Government Complex-Daejeon, 189 Cheongsa-ro, Seo-gu, Daejeon 302-701, Republic of Korea	Authorized officer COMMISSIONER
Facsimile No. 82-42-472-7140	Telephone No. 82-42-481-8753

* Attention

Copies of the documents cited in the international search report can be searched in the following Korean Intellectual Property Office English website for three months from the date of mailing of the international search report.

http://www.kipo.go.kr/en/ => PCT Services => PCT Services

ID : PCT international application number
PW : **I03AD6XW**

PATENT COOPERATION TREATY

From the
INTERNATIONAL SEARCHING AUTHORITY

To:
YANG Moon Ock

S&IP Patent & Law Firm 2F, Samheung Yeoksam Bldg. 735-10 Yeoksam-dong Gangnam-gu seoul 135-080 Republic of Korea

PCT

WRITTEN OPINION OF THE INTERNATIONAL SEARCHING AUTHORITY

(PCT Rule 43bis.1)

Date of mailing *(day/month/year)*	**23 MAY 2011 (23.05.2011)**
Applicant's or agent's file reference BPP2010-0161	**FOR FURTHER ACTION** See paragraph 2 below

International application No.	International filing date *(day/month/year)*	Priority date *(day/month/year)*
PCT/KR2010/006337	**16 SEPTEMBER 2010 (16.09.2010)**	21 SEPTEMBER 2009 (21.09.2009)

International Patent Classification (IPC) or both national classification and IPC

H04B 7/14(2006.01)i

Applicant

LG ELECTRONICS INC. et al

1. This opinion contains indications relating to the following items:

- [x] Box No. I Basis of the opinion
- [ ] Box No. II Priority
- [ ] Box No. III Non-establishment of opinion with regard to novelty, inventive step and industrial applicability
- [ ] Box No. IV Lack of unity of invention
- [x] Box No. V Reasoned statement under Rule 43bis.1(a)(i) with regard to novelty, inventive step or industrial applicability; citations and explanations supporting such statement
- [ ] Box No. VI Certain documents cited
- [ ] Box No. VII Certain defects in the international application
- [ ] Box No. VIII Certain observations on the international application

2. **FURTHER ACTION**

If a demand for international preliminary examination is made, this opinion will be considered to be a written opinion of the International Preliminary Examining Authority ("IPEA") except that this does not apply where the applicant chooses an Authority other than this one to be the IPEA and the chosen IPEA has notified the International Bureau under Rule 66.1bis(b) that written opinions of this International Searching Authority will not be so considered.

If this opinion is, as provided above, considered to be a written opinion of the IPEA, the applicant is invited to submit to the IPEA a written reply together, where appropriate, with amendments, before the expiration of 3 months from the date of mailing of Form PCT/ISA/220 or before the expiration of 22 months from the priority date, whichever expires later.
For further options, see Form PCT/ISA/220.

3. For further details, see notes to Form PCT/ISA/220.

Name and mailing address of the ISA/KR	Date of completion of this opinion	Authorized officer
Korean Intellectual Property Office Government Complex-Daejeon, 189 Cheongsa-ro, Seo-gu, Daejeon 302-701, Republic of Korea Facsimile No. 82-42-472-7140	20 MAY 2011 (20.05.2011)	KIM, Byoung Sung Telephone No.82-42-481-5652

WRITTEN OPINION OF THE INTERNATIONAL SEARCHING AUTHORITY

International application No.
PCT/KR2010/006337

Box No. 1 Basis of this opinion

1. With regard to the **language**, this opinion has been established on the basis of:

   ☒ the international application in the language in which it was filed

   ☐ a translation of the international application into _____, which is the language of a translation furnished for the purposes of international search (Rules 12.3(a) and 23.1(b))

2. ☐ This opinion has been established taking into account the **rectification of an obvious mistake** authorized by or notified to this Authority under Rule 91 (Rule 43*bis*.1(a))

3. With regard to any **nucleotide and/or amino acid sequence** disclosed in the international application, this opinion has been established on the basis of:

   a. a sequence listing filed or furnished
      ☐ on paper
      ☐ in electronic form

   b. time of filing or furnishing
      ☐ contained in the international application as filed.
      ☐ filed together with the international application in electronic form.
      ☐ furnished subsequently to this Authority for the purposes of search.

4. ☐ In addition, in the case that more than one version or copy of a sequence listing has been filed or furnished, the required statements that the information in the subsequent or additioanl copies is identical to that in the application as filed or does not go beyond the application as filed, as appropriate, were furnished.

5. Additional comments:

WRITTEN OPINION OF THE INTERNATIONAL SEARCHING AUTHORITY

International application No.
PCT/KR2010/006337

Box No. V Reasoned statement under Rule 43bis.1(a)(i) with regard to novelty, inventive step or industrial applicability; citations and explanations supporting such statement

1. Statement

Novelty (N)	Claims	1-18	YES
	Claims	NONE	NO
Inventive step (IS)	Claims	1-18	YES
	Claims	NONE	NO
Industrial applicability (IA)	Claims	1-18	YES
	Claims	NONE	NO

2. Citations and explanations :

Reference is made to the following documents:

D1: IEEE Std 802.16j-2009, "Part 16: Air Interface for Broadband Wireless Access Systems - Amendment 1: Multihop Relay Specification," 12 June 2009

D2: J. Sydir, et al., "An evolved cellular system architecture incorporating relay stations," IEEE Communications Magazine, pp. 115-121, June 2009

D3: Shkumbin Hamiti, "The Draft IEEE 802.16m System Description Document," IEEE 802.16m-08/003r3, 16 June 2008

Novelty and Inventive Step

The present invention proposes a method of a relay station (RS) transmitting and receiving a signal in a wireless communications system. Specifically, the method of claim 1 includes the steps of: (a1) comparing a time necessary to switch an operation from a downlink (DL) access zone to a DL relay zone and a propagation delay time taken to receive the signal from a base station (BS) and (b1) configuring some symbols of the DL access zone or the DL relay zone as a transition time according to a result of the comparison, etc.

D1 to D3 respectively disclose a frame structure for relaying between a base station and a mobile station. However, none of the prior arts, D1 to D3, teach or fairly suggest said steps of claim 1. And the technical feature of claim 1 cannot be easily derived from each prior art or any combination of said prior arts by one skilled in the art. Hence, the subject matter of claim 1 is considered to be novel and to involve an inventive step in the sense of PCT Article 33(2),(3).

The independent claim 6 relates to a method of an RS transmitting and receiving a signal in a wireless communications system, which includes the steps of: (a2) receiving a signal from a relay MS in a uplink (UL) access zone and (b2) transmitting the signal to a BS in a UL relay zone, wherein the UL access zone is time-aligned with an UL access zone of a BS frame and then transmitted or transmitted before the UL access zone of the BS frame by a specific time interval.

(Continued on Supplemental Box)

Supplemental Box

In case the space in any of the preceding boxes is not sufficient.
Continuation of :

Box No. V

None of the prior arts, D1 to D3, teach or fairly suggest said steps of claim 6. And the technical feature of claim 6 cannot be easily derived from each prior art or any combination of said prior arts by one skilled in the art. Hence, the subject matter of claim 6 is considered to be novel and to involve an inventive step in the sense of PCT Article 33(2),(3).

The independent claim 12 relates to a method of an RS transmitting and receiving a signal in a wireless communications system, which includes the steps of: (a3) receiving frame configuration information about an RS frame from a BS and (b3) configuring a transition time in a DL access zone or a UL relay zone, etc. None of the prior arts, D1 to D3, teach or fairly suggest said steps of claim 12. And the technical feature of claim 12 cannot be easily derived from each prior art or any combination of said prior arts by one skilled in the art. Hence, the subject matter of claim 12 is considered to be novel and to involve an inventive step in the sense of PCT Article 33(2),(3).

As for the other independent claims, claims 16~18 relate to an RS. The functions of claims 16~18 simply correspond to the steps of claim 1, 6 or 12, respectively. So, the subject matter of claims 16~18 is considered to be novel and to involve an inventive step in the sense of PCT Article 33(2),(3).

Therefore, the subject matter of claims 1~18, including all dependent claims, meets the criteria set out in PCT Article 33(2),(3).

Industrial Applicability

Claims 1~18 are industrially applicable under PCT Article 33(4).

PATENT COOPERATION TREATY

PCT

INTERNATIONAL SEARCH REPORT

(PCT Article 18 and Rules 43 and 44)

Applicant's or agent's file reference	FOR FURTHER ACTION	see Form PCT/ISA/220 as well as, where applicable, item 5 below.
BPP2010-0161		
International application No.	International filing date *(day/month/year)*	(Earliest) Priority Date *(day/month/year)*
PCT/KR2010/006337	**16 SEPTEMBER 2010 (16.09.2010)**	21 SEPTEMBER 2009 (21.09.2009)

Applicant

LG ELECTRONICS INC. et al

This International search report has been prepared by this International Searching Authority and is transmitted to the applicant according to Article 18. A copy is being transmitted to the International Bureau.

This international search report consists of a total of 3 sheets.

☐ It is also accompanied by a copy of each prior art document cited in this report.

1. **Basis of the report**
   a. With regard to the **language**, the international search was carried out on the basis of:
      ☒ the international application in the language in which it was filed
      ☐ a translation of the international application into _____, which is the language of a translation furnished for the purposes of international search (Rules 12.3(a) and 23.1(b))
   b. ☐ This international search report has been established taking into account the **rectification of an obvious mistake** authorized by or notified to this Authority under Rule 91 (Rule 43.6*bis*(a)).
   c. ☐ With regard to any **nucleotide and/or amino acid sequence** disclosed in the international application, see Box No. I.
2. ☐ **Certain claims were found unsearchable** (See Box No. II)
3. ☐ **Unity of invention is lacking** (See Box No. III)
4. With regard to the **title,**
   ☒ the text is approved as submitted by the applicant.
   ☐ the text has been established by this Authority to read as follows:

5. With regard to the **abstract,**
   ☒ the text is approved as submitted by the applicant.
   ☐ the text has been established, according to Rule 38.2, by this Authority as it appears in Box No. IV. The applicant may, within one month from the date of mailing of this international search report, submit comments to this Authority.
6. With regard to the drawings,
   a. the figure of the **drawings** to be published with the abstract is Figure No. **12**
      ☒ as suggested by the applicant.
      ☐ as selected by this Authority, because the applicant failed to suggest a figure.
      ☐ as selected by this Authority, because this figure better characterizes the invention.
   b. ☐ none of the figure is to be published with the abstract.

INTERNATIONAL SEARCH REPORT

International application No.
PCT/KR2010/006337

A. CLASSIFICATION OF SUBJECT MATTER

H04B 7/14(2006.01)i

According to International Patent Classification (IPC) or to both national classification and IPC

B. FIELDS SEARCHED

Minimum documentation searched (classification system followed by classification symbols)
H04B 7/14

Documentation searched other than minimum documentation to the extent that such documents are included in the fields searched
Korean utility models and applications for utility models
Japanese utility models and applications for utility models

Electronic data base consulted during the international search (name of data base and, where practicable, search terms used)
eKOMPASS(KIPO internal) & Keywords: relay, propagation, delay, transition, time

C. DOCUMENTS CONSIDERED TO BE RELEVANT

Category*	Citation of document, with indication, where appropriate, of the relevant passages	Relevant to claim No.
A	IEEE Std 802.16j-2009, "Part 16: Air Interface for Broadband Wireless Access Systems - Amendment 1: Multihop Relay Specification," 12 June 2009 See section 8.4.4.8 (page 192 - page 200)	1-18
A	J. Sydir, et al., "An evolved cellular system architecture incorporating relay stations," IEEE Communications Magazine, pp. 115-121, June 2009 See section "Relaying Modes"; figures 4 and 5.	1-18
A	Shkumbin Hamiti, "The Draft IEEE 802.16m System Description Document," IEEE 802.16m-08/003r3, 16 June 2008 See section 11.4 (page 25 - page 36)	1-18

☐ Further documents are listed in the continuation of Box C. ☒ See patent family annex.

* Special categories of cited documents:
"A" document defining the general state of the art which is not considered to be of particular relevance
"E" earlier application or patent but published on or after the international filing date
"L" document which may throw doubts on priority claim(s) or which is cited to establish the publication date of citation or other special reason (as specified)
"O" document referring to an oral disclosure, use, exhibition or other means
"P" document published prior to the international filing date but later than the priority date claimed
"T" later document published after the international filing date or priority date and not in conflict with the application but cited to understand the principle or theory underlying the invention
"X" document of particular relevance; the claimed invention cannot be considered novel or cannot be considered to involve an inventive step when the document is taken alone
"Y" document of particular relevance; the claimed invention cannot be considered to involve an inventive step when the document is combined with one or more other such documents,such combination being obvious to a person skilled in the art
"&" document member of the same patent family

Date of the actual completion of the international search	Date of mailing of the international search report
20 MAY 2011 (20.05.2011)	**23 MAY 2011 (23.05.2011)**

Name and mailing address of the ISA/KR
Korean Intellectual Property Office
Government Complex-Daejeon, 189 Cheongsa-ro, Seo-gu, Daejeon 302-701, Republic of Korea
Facsimile No. 82-42-472-7140

Authorized officer
KIM, Byoung Sung
Telephone No. 82-42-481-5652

INTERNATIONAL SEARCH REPORT

Information on patent family members

International application No.
PCT/KR2010/006337

Patent document cited in search report	Publication date	Patent family member(s)	Publication date
None			

(12) INTERNATIONAL APPLICATION PUBLISHED UNDER THE PATENT COOPERATION TREATY (PCT)

(19) World Intellectual Property Organization
International Bureau

(43) International Publication Date
24 March 2011 (24.03.2011)

PCT

(10) International Publication Number
WO 2011/034350 A2

(51) International Patent Classification:
H04B 7/14 (2006.01)

(21) International Application Number:
PCT/KR2010/006337

(22) International Filing Date:
16 September 2010 (16.09.2010)

(25) Filing Language: English

(26) Publication Language: English

(30) Priority Data:
61/244,348 21 September 2009 (21.09.2009) US
61/244,775 22 September 2009 (22.09.2009) US
10-2010-0031025 5 April 2010 (05.04.2010) KR

(71) Applicant *(for all designated States except US)*: **LG ELECTRONICS INC.** [KR/KR]; 20 Yeouido-dong Yeongdeungpo-gu, Seoul 150-721 (KR).

(72) Inventors; and

(75) Inventors/Applicants *(for US only)*: **CHUN, Jin Young** [KR/KR]; LG R&D Complex, 533 Hogye 1-dong Dongan-gu, Anyang-si Gyeonggi-do 431-749 (KR). **LIM, Dong Guk** [KR/KR]; LG R&D Complex, 533 Hogye 1-dong Dongan-gu, Anyang-si Gyeonggi-do 431-749 (KR). **CHO, Han Gyu** [KR/KR]; LG R&D Complex, 533 Hogye 1-dong Dongan-gu, Anyang-si Gyeonggi-do 431-749 (KR). **KWAK, Jin Sam** [KR/KR]; LG R&D Complex, 533 Hogye 1-dong Dongan-gu, Anyang-si Gyeonggi-do 431-749 (KR).

(74) Agent: **YANG, Moon Ock**; Essen Patent & Law Firm, 2F. Samheung Yeoksam Bldg., 735-10 Yeoksam-dong, Gangnam-gu, Seoul 135-080 (KR).

(81) Designated States *(unless otherwise indicated, for every kind of national protection available)*: AE, AG, AL, AM, AO, AT, AU, AZ, BA, BB, BG, BH, BR, BW, BY, BZ, CA, CH, CL, CN, CO, CR, CU, CZ, DE, DK, DM, DO, DZ, EC, EE, EG, ES, FI, GB, GD, GE, GH, GM, GT, HN, HR, HU, ID, IL, IN, IS, JP, KE, KG, KM, KN, KP, KZ, LA, LC, LK, LR, LS, LT, LU, LY, MA, MD, ME, MG, MK, MN, MW, MX, MY, MZ, NA, NG, NI, NO, NZ, OM, PE, PG, PH, PL, PT, RO, RS, RU, SC, SD, SE, SG, SK, SL, SM, ST, SV, SY, TH, TJ, TM, TN, TR, TT, TZ, UA, UG, US, UZ, VC, VN, ZA, ZM, ZW.

(84) Designated States *(unless otherwise indicated, for every kind of regional protection available)*: ARIPO (BW, GH, GM, KE, LR, LS, MW, MZ, NA, SD, SL, SZ, TZ, UG, ZM, ZW), Eurasian (AM, AZ, BY, KG, KZ, MD, RU, TJ, TM), European (AL, AT, BE, BG, CH, CY, CZ, DE, DK, EE, ES, FI, FR, GB, GR, HR, HU, IE, IS, IT, LT, LU, LV, MC, MK, MT, NL, NO, PL, PT, RO, SE, SI, SK, SM, TR), OAPI (BF, BJ, CF, CG, CI, CM, GA, GN, GQ, GW, ML, MR, NE, SN, TD, TG).

Published:

— *without international search report and to be republished upon receipt of that report (Rule 48.2(g))*

(54) Title: METHOD AND APPARATUS FOR TRANSMITTING AND RECEIVING SIGNAL IN RELAY STATION

[Fig. 12]

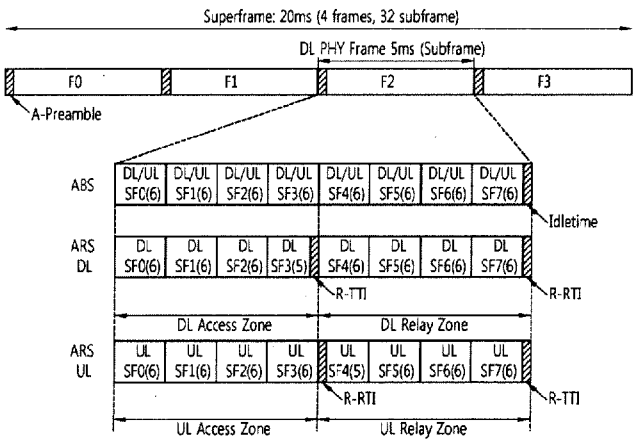

(57) Abstract: A method of a Relay Station (RS) transmitting and receiving a signal in a wireless communication system including the RS, comprising receiving frame configuration information about an RS frame from a Base Station (BS), configuring a downlink (DL) access zone in which a signal is transmitted to a relay Mobile Station (MS) connected to the RS and a DL relay zone in which a signal is received from the BS in the RS frame on the basis of the frame configuration information, comparing a time necessary to switch an operation from the DL access zone to the DL relay zone and a propagation delay time taken to receive the signal from the BS, configuring some symbols of the DL access zone or the DL relay zone as a transition time according to a result of the comparison, transmitting the signal to the relay MS in the DL access zone, and receiving the signal from the BS in the DL relay zone.

WO 2011/034350 A2

Description

Title of Invention: METHOD AND APPARATUS FOR TRANSMITTING AND RECEIVING SIGNAL IN RELAY STATION

Technical Field

[0001] The present invention relates to wireless communication and, more particularly, to a method of a relay station transmitting and receiving a signal and an apparatus for performing the same.

Background Art

[0002] An IEEE (Institute of Electrical and Electronics Engineers) 802.16e standard is a sixth standard for IMT (International Mobile Telecommunication)-2000 in the ITU-R (ITU-Radio communication Sector) under the control of ITU (International Telecommunication Union) in the year 2007 and has been adopted by the name of 'WMAN-OFDMA TDD'. The ITU-R is preparing for an IMT-Advanced system which is the next-generation 4G mobile communication standard since the IMT-2000. IEEE 802.16 WG (Working Group) has decided to go ahead with an IEEE 802.16m project with the object of writing an amendment standard of the existing IEEE 802.16e which is a standard for the IMT-Advanced system at the end of the year 2006. As can be seen from the above object, the IEEE 802.16m standard involves the two aspects of the past continuation (i.e., an amendment of the IEEE 802.16e standard) and the future continuation (i.e., a standard for the next-generation IMT-Advanced system). Accordingly, the IEEE 802.16m standard is required to fulfill all advanced requirements for the IMT-Advanced system while maintaining compatibility with a Mobile WiMAX system based on the IEEE 802.16e standard.

[0003] In the case of a wideband wireless communication system, an effective transmission and reception scheme and a utilization scheme have been proposed in order to maximize the efficiency of limited radio resources. One of the systems taken into consideration in the next-generation wireless communication system is an Orthogonal Frequency Division Multiplexing (OFDM) system which can attenuate an Inter-Symbol Interference (ISI) effect with low complexity. The OFDM system converts serially inputted data symbols into N number of parallel data symbols and carries them on N number of separated subcarriers. The subcarriers maintain orthogonality in the frequency domain. Each of the orthogonal channels experiences independent frequency selective fading. Accordingly, complexity at a receiving terminal can be reduced, the interval between transmitted symbols is lengthened, and ISI can be minimized.

[0004] Orthogonal Frequency Division Multiple Access (OFDMA) refers to a multi-access

method for realizing multi-access by independently providing some of available sub-carriers to respective users in a system using OFDM as a modulation method. In the OFDMA method, it is common that frequency resources called the subcarriers are provided to respective users, and the frequency resources do not overlap with each other because they are independently provided to the plurality of users. Consequently, the frequency resources are exclusively allocated to the users. In the OFDMA system, frequency diversity for multiple users can be obtained through frequency selective scheduling, and subcarriers can be allocated in various ways according to a permutation method for the subcarriers. Further, the efficiency of a spatial region can be increased through a spatial multiplexing scheme using multiple antennas.

[0005] Meanwhile, a wireless communication system including relay stations is being developed. The relay station(RS) functions to expand the cell coverage and improve the performance of transmission. If a base station provides services to a mobile station, placed at the boundary of the coverage of the base station, through a relay station, the cell coverage can be expanded. Furthermore, if a relay station improves reliability in the transmission of signals between a base station and a mobile station, the amount of transmission data can be increased. Although a mobile station is placed within the cell coverage of a base station, it may use a relay station if the mobile station is placed in the shadow region.

[0006] The relay station can be chiefly divided into two types. The first type is a transparent relay station. In this type, a base station determines all pieces of information necessary for a relay process, and the transparent relay station simply relays data, received from the base station, to a subordinate relay station or a mobile station. The transparent relay station uses the same carrier frequency as a superordinate or subordinate station. The second type is a non-transparent relay station. The non-transparent relay station directly performs resource allocation necessary for a relay process, the determination of a Modulation and Coding Scheme (MCS) level, power control, etc. and relays data. The non-transparent relay station may use the same carrier frequency as a superordinate or subordinate station or may use a different carrier frequency from the superordinate or subordinate station.

[0007] In a centralized scheduling mode, a base station determines the allocation of frequency bands for a relay station(RS) and a relay station mobile station(RS-MS). In a distributed scheduling mode, a RS determines the allocation of frequency bands to a RS-MS while operating in conjunction with a base station. A transparent base station can be operated only in the centralized scheduling mode, and a non-transparent base station can be operated in the centralized or distributed scheduling mode.

[0008] Amplify and Forward (AF) and Decode and Forward (DF) can be used as a relay method for a RS. In the AF method, the RS amplifies data received from a base station

and transmits the data to a mobile station(MS). In the DF method, the RS checks a destination station by decoding data received from a base station, encodes the decoded data, and relays the encoded data to a subordinate RS or a MS (i.e., the destination station).

[0009] In a wireless communication system including such a relay station, a new frame structure different from a conventional frame structure is required. The RS can use the same frequency band, used to transmit a signal to a base station, as a frequency band used to receive a signal from a RS-MS. Alternatively, the RS can use the same frequency band, used to receive a signal from a base station, as a frequency band used to transmit a signal to a RS-MS. The RS is difficult to transmit and receive a signal at the same time in the same frequency band because of self-interference. Accordingly, the time for switching the operation mode between the transmission and reception of a signal is required. It is assumed that in the operation mode transition time, a RS is in general unable to transmit or receive a signal.

[0010] There is a propagation delay time that must be taken into consideration along with the operation mode transition time. The propagation delay time can be considered as a physical transfer time which is taken to transmit and receive a radio signal between two communication stations. In other words, in a wireless communication system including a relay station, the RS has to communicate with a base station and a MS on the basis of a timing relationship in which the operation mode transition time, the propagation delay time, and so on are taken into consideration.

Summary of Invention

Technical Problem

[0011] The present invention provides a method of a relay station transmitting and receiving a signal in a wireless communication system including the relay station and an apparatus for performing the same.

Solution to Problem

[0012] In accordance with an aspect of the present invention, there is provided a method of a Relay Station (RS) transmitting and receiving a signal in a wireless communication system including the RS, comprising receiving frame configuration information about an RS frame from a Base Station (BS), configuring a downlink (DL) access zone in which a signal is transmitted to a relay Mobile Station (MS) connected to the RS and a DL relay zone in which a signal is received from the BS in the RS frame on the basis of the frame configuration information, comparing a time necessary to switch an operation from the DL access zone to the DL relay zone and a propagation delay time taken to receive the signal from the BS, configuring some symbols of the DL access zone or the DL relay zone as a transition time according to a result of the comparison,

transmitting the signal to the relay MS in the DL access zone, and receiving the signal from the BS in the DL relay zone.

[0013] In accordance with another aspect of the present invention, there is provided a method of an RS transmitting and receiving a signal in a wireless communication system including the RS, comprising receiving frame configuration information about an RS frame from a BS, configuring an uplink (UL) access zone in which a signal is received from a relay MS connected to the RS and an UL relay zone in which a signal is transmitted to the BS in the RS frame on the basis of the frame configuration information, receiving the signal from the relay MS in the UL access zone, and transmitting the signal to the BS in the UL relay zone. The UL access zone is time-aligned with an UL access zone of a BS frame and then transmitted or transmitted before the UL access zone of the BS frame as much as a specific time interval.

[0014] In accordance with yet another aspect of the present invention, there is provided a method of an RS transmitting and receiving a signal in a wireless communication system including the RS, comprising receiving frame configuration information about an RS frame from a BS, configuring a frame, comprising a DL access zone in which a signal is transmitted to a relay MS connected to the RS, a DL relay zone in which a signal is received from the BS, an UL access zone in which a signal is received from the relay MS connected to the RS, and an UL relay zone in which a signal is transmitted to the BS, on the basis of the frame configuration information, configuring a transition time in the DL access zone or the UL relay zone, transmitting the signal in the DL access zone or the UL relay zone and receiving the signal in the DL relay zone or the UL access zone.

Advantageous Effects of Invention

[0015] An RS can perform communication with a BS or a relay MS by taking an operation switching time between a reception mode and a transmission mode and a transmission delay time required to transmit and receive a signal into consideration. Accordingly, communication can be performed with an RS included in a wireless communication system even without greatly changing a frame structure between the existing BS and the existing macro MS.

Brief Description of Drawings

[0016] FIG. 1 is a diagram showing a wireless communication system including relay stations;

[0017] FIG. 2 is a diagram showing an example of a superframe structure;

[0018] FIG. 3 is a diagram showing an example of a TDD frame structure;

[0019] FIG. 4 is a diagram showing an example of an FDD frame structure;

[0020] FIG. 5 is a diagram showing an example of a frame structure;

[0021] FIG. 6 is a diagram showing an example of a frame structure which can be used in a wireless communication system including relay stations;

[0022] FIG. 7 is a diagram conceptually showing a frame structure to which a method of a relay station transmitting and receiving a signal according to an embodiment of the present invention is applied;

[0023] FIG. 8 is a diagram showing a TDD frame structure;

[0024] FIG. 9 is a diagram showing an example of a TDD frame structure;

[0025] FIG. 10 is a diagram showing an FDD DL frame structure;

[0026] FIG. 11 is a diagram showing an FDD UL frame structure;

[0027] FIG. 12 is a diagram showing an example including a transition time in an FDD frame; and

[0028] FIG. 13 is a diagram showing the construction of a relay station and a base station.

Mode for the Invention

[0029] The following technologies can be used in a variety of wireless communication systems, such as Code Division Multiple Access (CDMA), Frequency Division Multiple Access (FDMA), Time Division Multiple Access (TDMA), Orthogonal Frequency Division Multiple Access (OFDMA), and Single-Carrier Frequency Division Multiple Access (SC-FDMA). The CDMA system can be implemented using radio technology, such as Universal Terrestrial Radio Access (UTRA) or CDMA2000. The TDMA system can be implemented using radio technology, such as Global System for Mobile communications (GSM), General Packet Radio Service (GPRS), or Enhanced Data Rates for GSM Evolution (EDGE). The OFDMA system can be implemented using radio technology, such as IEEE (Institute of Electrical and Electronics Engineers) 802.11 (Wi-Fi), IEEE 802.16 (WiMAX), IEEE 802-20, or Evolved UTRA (E-UTRA). The IEEE 802.16m is the evolution of IEEE 802.16e, and it provides backward compatibility with an IEEE 802.16e-based system. The UTRA is part of a Universal Mobile Telecommunications System (UMTS). 3rd Generation Partnership Project (3GPP) Long Term Evolution (LTE) is part of Evolved UTMS (E-UMTS) using Evolved-UMTS Terrestrial Radio Access (E-UTRA). The 3GPP LTE adopts OFDMA in the downlink and SC-FDMA in the uplink. LTE-A (Advanced) is the evolution of 3GPP LTE.

[0030] In order to clarify a description, an IEEE 802.16m system is chiefly described, but the technical feature of the present invention is not limited thereto.

[0031] FIG. 1 is a diagram showing a wireless communication system including Relay Station (hereinafter referred to as RS).

[0032] Referring to FIG. 1, the wireless communication system 10 including RSs includes at least one Base Station (hereinafter referred to as a BS). The BS 11 provides commu-

nication services to a geographical area 15, in general called a cell. The cell can be divided into a plurality of areas. Each of the areas is called a sector. One or more cells can exist in one BS. In general, the BS 11 refers to a fixed station which communicates with a Mobile Station (hereinafter referred to as an MS) 13, and it can also be referred to as another terminology, such as an Evolved NodeB (eNB), a Base Transceiver System (BTS), an Access Point (AP), an Access Network (AN), or an Advanced Base Station(ABS). The BS 11 can perform functions, such as connectivity, management, control, and resource allocation between an RS 12 and an MS 14.

[0033] The RS 12 refers to a device for relaying signals between the BS 11 and the MS 14, and it can also be referred to as another terminology, such as a Relay Node (RN), a repeater, or an Advanced Relay Station(ARS). Any method, including Amplify and Forward (AF) and Decode and Forward (DF), can be used as the relay method used by the RS, but the technical feature of the present invention is not limited thereto.

[0034] The MSs 13 and 14 can be fixed and mobile and can also be referred to as another terminology, such as an Advanced Mobile Station(AMS), a User Terminal(UT), a Subscriber Station(SS), a wireless device, a Personal Digital Assistant (PDA), a wireless modem, a handheld device, an Access Terminal (AT), or a User Equipment(UE). Hereinafter, a macro MS refers to an MS directly communicating with the BS 11, and a relay MS(RS-MS) refers to an MS communicating with an RS. The macro MS 13 within the cell of the BS 11 can also communicate with the BS 11 via the RS 12 in order to improve the transfer rate according to the diversity effect.

[0035] It is hereinafter assumed that downlink (DL) refers to communication from the BS 11 to the macro MS 13 and uplink (UL) refers to communication from the macro MS 13 to the BS 11.

[0036] FIG. 2 is a diagram showing an example of a superframe structure.

[0037] A superframe (SF) includes a superframe header (SFH) and 4 frames F0, F1, F2, and F3. The frames within the superframe can have the same length. The size of each superframe can be 20 ms and the size of each frame can be 5 ms, but not limited thereto. The length of the superframe, the number of frames included in the superframe, the number of subframes included in each frame, etc. can be modified in various ways. The number of subframes in the frame can be changed in various ways according to a channel bandwidth, the length of a Cyclic Prefix (CP), or both.

[0038] The superframe header can carry essential system parameters and system configuration information. The superframe header can be placed within the first subframe of the superframe. The superframe header can be classified into a Primary-SFH (P-SFH) and a secondary-SFH (S-SFH). The P-SFH and the S-SFH can be transmitted every superframe.

[0039] One frame includes a plurality of subframes SF0, SF1, SF2, SF3, SF4, SF5, SF6, and

SF7. Each of the subframes can be used for UL or DL transmission. One subframe includes a plurality of OFDM (orthogonal frequency division multiplexing) symbols in the time domain and a plurality of subcarriers in the frequency domain. The OFDM symbol is used to represent one symbol period and can be called another terminology, such as an OFDMA symbol or an SC-FDMA symbol, according to a multi-access method. The subframe can be composed of 5, 6, 7, or 9 OFDM symbols, but is only illustrative. The number of OFDM symbols included in the subframe is not limited. The number of OFDM symbols included in the subframe can be changed in various ways according to a channel bandwidth or the length of a CP or both. The type of a subframe can be defined according to the number of OFDM symbols included in the subframe. For example, it can be defined that a type-1 subframe includes 6 OFDM symbols, a type-2 subframe includes 7 OFDM symbols, a type-3 subframe includes 5 OFDM symbols, and a type-4 subframe includes 9 OFDM symbols. One frame can include subframes having the same type. In an alternative example, one frame can include subframes having different types. That is, the number of OFDM symbols included in each of subframes within one frame can be the same or different. In an alternative example, the number of OFDM symbols included in at least one of subframes within one frame can be different from the number of OFDM symbols included in the remaining subframes.

[0040] A Time Division Duplex (TDD) method or a Frequency Division Duplex (FDD) method can be applied to a frame. In the TDD method, subframes are used for UL transmission or DL transmission at different times in the same frequency. That is, subframes within the TDD frame of the TDD method are classified into UL subframes and DL subframes in the time domain. Subframes within the FDD frame of the FDD method are used for UL transmission or DL transmission at different frequencies on the same time. That is, subframes within the FDD frame are classified into UL subframes and DL subframes in the frequency domain. UL transmission and DL transmission occupy different frequency bands, and they can be performed at the same time.

[0041] One OFDM symbol includes a plurality of subcarriers in the frequency domain, and the number of subcarriers is determined according to the size of an FFT. There are several types of the subcarriers. The types of the subcarriers can be classified into a data subcarrier for data transmission, a pilot subcarrier for a various estimation, a null carrier for a guard band and a DC carrier. Parameters characterizing the OFDM symbol include a BW, N_{used}, n, G, and so on. BW is a nominal channel bandwidth. N_{used} is the number of used subcarriers (including DC subcarriers). '' is a sampling factor. The parameter is combined with BW and N_{used} and used to determine subcarrier spacing and a useful symbol time. G is the ratio of a CP time and a useful time.

[0042] The following Table 1 shows OFDMA parameters.

[0043] [Table 1]

Channel bandwidth, BW(MHz)			5	7	8.75	10	20
Sampling factor, n			28/25	8/7	8/7	28/25	28/25
Sampling frequency, F_s(MHz)			5.6	8	10	11.2	22.4
FFT size, N_{FFT}			512	1024	1024	1024	2048
Subcarrier spacing, Δf(kHz)			10.94	7.81	9.77	10.94	10.94
Useful symbol time, T_b(μs)			91.4	128	102.4	91.4	91.4
G=1/8	Symbol time, T_s(μs)		102.857	144	115.2	102.857	102.857
	FDD	Number of OFDMA symbols per 5ms frame	48	34	43	48	48
		Idle time(μs)	62.857	104	46.40	62.857	62.857
	TDD	Number of OFDMA symbols per 5ms frame	47	33	42	47	47
		TTG+RTG(μs)	165.714	248	161.6	165.714	165.714
G=1/16	Symbol time, T_s(μs)		97.143	136	108.8	97.143	97.143
	FDD	Number of OFDMA symbols per 5ms frame	51	36	45	51	51
		Idle time(μs)	45.71	104	104	45.71	45.71
	TDD	Number of OFDMA symbols per 5ms frame	50	35	44	50	50
		TTG+RTG(μs)	142.853	240	212.8	142.853	142.853
G=1/4	Symbol time, T_s(μs)		114.286	160	128	114.286	114.286
	FDD	Number of OFDMA symbols per 5ms frame	43	31	39	43	43
		Idle time(μs)	85.694	40	8	85.694	85.694
	TDD	Number of OFDMA symbols per 5ms frame	42	30	38	42	42
		TTG+RTG(μs)	199.98	200	136	199.98	199.98
Number of Guard subcarriers		Left	40	80	80	80	160
		Right	39	79	79	79	159
Number of used subcarriers			433	865	865	865	1729
Number of PRU in type-1 subframe			24	48	48	48	96

[0044] In Table 1, N_{FFT} is the smallest power of two greater than N_{used}, F_s = floor (n·BW/8000)×8000, the subcarrier spacing $\Delta f = F_s/N_{FFT}$, the useful symbol time $T_b = 1/\Delta f$, the CP time $T_g = G \cdot T_b$, the OFDMA symbol time $T_s = T_b + T_g$, and the sampling time is T_b/N_{FFT}.

[0045] FIG. 3 is a diagram showing an example of a TDD frame structure. This drawing shows a case in which G is 1/8. A superframe of 20 ms in length consists of 4 frames F0, F1, F2, and F3, each having a length of 5 ms. One frame consists of 8 subframes SF0, SF1, SF2, SF3, SF4, SF5, SF6, and SF7, and the ratio of DL subframes to UL subframes is 5:3. The TDD frame structure of FIG. 3 can be applied to a case in which

the bandwidth is 5 MHz, 10 MHz, or 20 MHz. The subframe SF4 (i.e., the last DL subframe) includes 5 OFDM symbols, and each of the remaining subframes includes 6 OFDM symbols.

[0046] FIG. 4 is a diagram showing an example of an FDD frame structure. This drawings shows a case in which G is 1/8. A superframe of 20 ms in length consists of 4 frames F0, F1, F2, and F3 each having a length of 5 ms. One frame consists of 8 subframes SF0, SF1, SF2, SF3, SF4, SF5, SF6, and SF7. All the subframes include a DL region and an UL region. The FDD frame structure of FIG. 4 can be applied to a case in which the bandwidth is 5 MHz, 10 MHz, or 20 MHz.

[0047] FIG. 5 is a diagram showing an example of a frame structure. This drawing shows a case in which G is 1/16. The frame structure of FIG. 5 can be applied to both an FDD system and a TDD system. The frame includes 8 subframes SF0, SF1, SF2, SF3, SF4, SF5, SF6, and SF7, and the ratio of DL subframes to UL subframes can be 5:3 in TDD system. The frame structure of FIG. 5 can be applied to a case in which the bandwidth is 5 MHz, 10 MHz, or 20 MHz. Each of the subframes may have 6 or 7 OFDM symbols.

[0048] FIG. 6 is a diagram showing an example of a frame structure which can be used in a wireless communication system including an RS.

[0049] In the wireless communication system including the RS, the RS can use the same OFDMA parameters as a BS (refer to Table 1). Further, as shown in FIG. 6, the superframe structure of a RS can be the same as the superframe structure of an BS. The superframe of the BS and the superframe of the RS can be time-aligned, and they can have the same number of frames and subframes. Each of all the superframes of the RS can include a superframe header, and the superframe header transmitted by the RS can have the same time location and format as the superframe header transmitted by the BS. Further, a preamble (for example, an SA-preamble and a PA-preamble) transmitted by the RS can be synchronized with a preamble transmitted by the BS and then transmitted.

[0050] An RS requires a radio resource region in which a signal can be transmitted to a relay MS(RS-MS) in the downlink because it has to transmit its own DL control information (for example, a preamble or an superframe header (SFH)). Further, an RS requires a radio resource region in which a signal can be transmitted to a BS in the uplink because it has to receive a signal from a relay MS, decode the signal, and retransmit the decoded signal to the BS. Further, an RS transmits a signal to a relay MS or receives a signal from a BS in the same frequency band. Alternatively, an RS receives a signal from a relay MS or transmits a signal to a BS in the same frequency band. Accordingly, the RS requires an operation switching time for operation stabilization when the operation for transmitting and receiving a signal is switched. In general, it is

assumed that an RS does not receive or transmit a signal in the operation switching time.

[0051] Further, an RS receives a signal, transmitted by a BS or a relay MS, after a propagation delay time. Likewise, a signal transmitted by an RS is received by a BS or a relay MS after a propagation delay time.

[0052] That is, a frame applied to an RS must take the operation switching time and the propagation delay time into consideration. A frame structure and a method of transmitting a frame to be described later can be applied to a 2 hop RS (i.e., an RS in a BS - RS - MS structure) or a 3 hop RS (i.e., an RS 1 and an RS 2 in a BS - RS 1 - RS 2 - MS structure) from among non-transparent RSs and can also be applied to transparent RSs. Further, the frame structure and the method can be applied to not only distributed scheduling, but also centralized scheduling.

[0053] First, in order to clarify the description, terminologies are defined.

[0054] In the following drawings and descriptions, an ABS refers to a BS(i.e. ABS=BS), an ARS refers to an RS(i.e. ARS=RS), and an AMS refers to an MS(i.e. AMS=MS). ABS, ARS and AMS are terminologies used in IEEE 802.16m standard.

[0055] Round Trip Delay (RTD) refers to a round trip delay time between two communication stations. For example, in communication between an RS and a BS (i.e., a superordinate station of the RS), the RTD can be the sum of the time that the BS takes to receive a signal transmitted by the RS and the time that the RS takes to receive a signal transmitted by the BS. From a viewpoint of the RS, the RTD can include a round trip delay time in communication with the BS and a round trip delay time in communication with a relay MS. The RTD is indicated by ARSRTD in the case of an RS, indicated by ABSRTD in the case of a BS, and indicated by AMSRTD in the case of an MS. Accordingly, 1/2 RTD can refer to a propagation delay time from a station on one side to a station on the other side.

[0056] A Transmit/receive Transition Gap (TTG) refers to a minimum value of a time interval which is required between a point of time at which a signal is transmitted and a point of time at which a signal is received in case where the signal is transmitted and the signal is received. An ARSTTG indicates a TTG in an RS frame, and an ABSTTG indicates a TTG in a BS frame (In the following drawings, the ABSTTG can be simply indicated by a TTG). For example, the ARSTTG can be measured as a time interval from the last sample time of a transmission burst to the first sample time of a reception burst in the antenna port of an RS. The ABSTTG can be the time longer than one symbol.

[0057] A Receive/transmit Transition Gap (RTG) refers to a minimum value of a time interval which is required between a point of time at which a signal is received and a point of time at which a signal is transmitted in case where the signal is received and

the signal is transmitted. An ARSRTG indicates an RTG in an RS frame, and an ABSRTG indicates an RTG in a BS frame (In the following drawings, the ABSRTG can be simply indicated by an RTG). For example, the ARSRTG can be measured as a time interval from the last sample time of a reception burst to the first sample time of a transmission burst in the antenna port of an RS.

[0058] An idle time is the time for preventing Inter-Symbol Interference (ISI) and may be include in a TTG or an RTG or can be given as an additional time. In case where a BS frame is an FDD frame, the time interval of an idle state is included between the BS frames. Such an time interval is indicated by IdleTime. In case where an RS frame is an FDD frame, the time interval of an idle state is included between the RS frames. Such an time interval is indicated by R_IdleTime. In the FDD DL frame of an RS, R_IdleTime can be equal to IdleTime. In the FDD UL frame of an RS, R_IdleTime can be equal to or smaller than IdleTime.

[0059] The following table shows an example of a bandwidth, the length of a symbol according to the length of a CP, TTG/RTG, and an idle time.

[0060] [Table 2]

BW		5/10/20MHz	7MHz	8.75MHz
1/8 CP	OFDM symbol time	102.857us	144us	115.2us
	TTG/RTG in TDD mode	105.714/60us	180/60us	138.4/74.4us
	Idle Time in FDD mode	62.857us	104us	46.4us
1/16 CP	OFDM symbol time	97.143us	136us	108.8us
	TTG/RTG in TDD mode	82.853/60us	188/60us	87.2/74us
	Idle Time in FDD mode	45.71us	104us	104us
1/4 CP	OFDM symbol time	114.286us	160us	128us
	TTG/RTG in TDD mode	139.988/60us	140/60us	TBD
	Idle Time in FDD mode	85.694us	40us	8us

[0061] In case where the cell coverage of a BS is 5 Km, RTD can be 33.3 μs, RTD/2 can be 16.7 μs, and ARSTTG or ARSRTG can be 50 μs.

[0062] In a wireless communication system including an RS, a BS frame can be divided into an access zone and a relay zone. In the BS frame, the access zone is located before the relay zone. Access zone duration and relay zone duration can differ in the UL and the DL. A BS can inform an RS of the zone configuration of the access zone and the relay

zone.

[0063] A BS frame can include a DL access zone and a DL transmission zone. The DL access zone refers to a radio resource region in which a BS transmits a signal to a macro MS. The DL transmission zone refers to a radio resource region in which a BS transmits a signal to an RS or a macro MS or both. The BS frame can further include an UL access zone and an UL reception zone. The UL access zone refers to a radio resource region in which a BS receives a signal from a macro MS. The UL reception zone refers to a radio resource region in which a BS receives a signal from a macro MS or an RS or both.

[0064] An RS frame can include a DL access zone, a DL reception zone, an UL access zone, and an UL transmission zone. The DL access zone refers to a radio resource region in which an RS transmits a signal to a relay MS. The DL reception zone refers to a radio resource region in which an RS receives a signal from a BS. The UL access zone refers to a radio resource region in which an RS receives a signal from a relay MS. The UL transmission zone refers to a radio resource region in which an RS transmits a signal to a BS.

[0065] In the following drawings, the DL reception zone or the DL transmission zone can also be referred to as a DL relay zone. The UL transmission zone or the UL reception zone can also be referred to as an UL relay zone. A BS or an RS can inform an MS of the locations of the DL relay zone and the UL relay zone. An RS can sustain long TTI allocation over the entire access zone or relay zone in the downlink or uplink.

[0066] A method of an RS transmitting and receiving a signal is described below on the basis of the above terminologies.

[0067] An RS receives frame configuration information about an RS frame from a BS and configures the RS frame on the basis of the frame configuration information. The frame configuration information can include information about a radio resource region in which communication with a relay MS is performed and about a radio resource region in which communication with the BS is performed in the RS frame. The frame configuration information can further include information about the type of a frame and OFDMA parameters. A BS can transmit the frame configuration information with it included in DL control information. For example, the frame configuration information can be broadcasted or multicasted with it included in an SF header. In this case, the frame configuration information can be applied to a plurality of frames. A method of an RS transmitting and receiving a signal using an RS frame configured on the basis of the frame configuration information is described in detail later. An RS transmits or receives a signal to a relay MS or a BS using the configured RS frame structure.

[0068] FIG. 7 is a diagram conceptually showing a frame structure to which a method of an

RS transmitting and receiving a signal according to an embodiment of the present invention is applied.

[0069] It is assumed that a BS and an RS perform time-alignment between a BS frame and an RS frame and transmit a signal. In this case, an RS frame structure is called a time-aligned frame. It is also assumed that ARSRTD is equal to AMSRTD, for convenience sake.

[0070] The BS(ABS) transmits a signal to a macro MS(i.e. AMS served by ABS) in the DL access zone, and the RS(ARS) transmits a signal to a relay MS(i.e. AMS served by ARS) in the DL access zone. It is assumed that the propagation delay time that the macro MS takes to receive a signal is equal to the propagation delay time that the relay MS takes to receive a signal, for convenience sake. The macro MS and the relay MS receive the signals after 1/2 AMSRTD.

[0071] After transmitting the signal to the relay MS in the DL access zone of the RS frame, the RS receives a signal from the BS in the DL reception zone (i.e., the DL relay zone of the RS frame). Here, the RS receives the signal, transmitted in the DL relay zone of the BS frame, in the DL relay zone of the RS frame after 1/2 ARSRTD. The RS experiences the switching of the operation mode from the transmission mode (i.e., the DL access zone) to the reception mode (i.e., the DL relay zone) and requires the time as much as ARSTTG for the operation mode switching.

[0072] If the 1/2 ARSRTD is greater than or equal to the ARSTTG, the RS does not have a problem in receiving the signal transmitted by the BS. However, if the 1/2 ARSRTD is smaller than the ARSTTG, the RS can have a problem in receiving the signal transmitted by the BS. This is because the signal transmitted by the BS must be sometimes received in the operation mode switching process. In such a case, for example, some or all of the first symbols of a DL relay zone in the RS frame can be configured as a transition time and the signal may not be received. In this case, the transition time can be referred to as a Relay Transmit to receive Transition Interval (R-TTI). The terminology R-TTI is used to indicate that it is required because of an operation of an RS transmitting a signal to a relay MS and then receiving a signal from a BS. The transition time is indicated by (C) 710 in FIG. 7. The region indicated by (C) 710 can be greater than or equal to { Max(1/2 ARSRTD, ARSTTG)-1/2 ARSRTD } in the time domain, and it can correspond to the time ranging from 0 to a maximum of one symbol. That is, the R-TTI may be necessary or may not be necessary.

[0073] Although not shown in FIG. 7, the transition time may be included in the DL access zone of an RS frame. For example, the last symbol of a DL access zone can be used as the transition time. Here, an RS can transmit a signal to a relay MS using symbols other than the last symbol in the DL access zone.

[0074] If the RS transmits the DL access zone ahead as much as Max(1/2 ARSRTD,

ARSTTG) or more than Max Max(1/2 ARSRTD, ARSTTG) without time-aligning the DL access zone and the DL access zone of a BS, the use of additional symbols for a transition time in the DL access zone and the DL relay zone in an RS frame can be prevented. As described above, an RS frame which has been temporally shifted is called a time-shifted frame. A method of an RS transmitting and receiving a signal using the time-shifted frame and the time-aligned frame is described in detail later.

[0075] The RS receives a signal from the relay MS in the UL access zone placed after the DL relay zone of the RS frame. In this case, the RS continues to operate in the reception mode (in the DL relay zone and in the UL access zone) and may not need the operation mode transition time. Accordingly, the UL access zone can be placed in succession to the DL relay zone. This is shown in an option 1 in FIG. 7.

[0076] It is assumed that the method of the option 1 is used. That is, in case where an UL access zone is placed in succession to a DL relay zone, a relay MS served by an RS has to transmit a signal before 1/2 AMSRTD on the basis of the UL access zone of the RS frame. In this case, the DL relay zone of the RS can overlap with the UL access zone of the relay MS, which can serve as interference.

[0077] If the RS is sought to transmit a signal to a BS in the UL relay zone after receiving a signal in the UL access zone, it requires the time ARSRTG. If the RS transmits a signal in the UL relay zone of an RS frame, the BS receives the signal after 1/2 ARSRTD. Accordingly, from a viewpoint of the BS, the time required between the DL frame region and the UL frame region is 1/2 ARSRTD + ARSRTG + 1/2 ARSRTD = ARSRTD + ARSRTG.

[0078] In the RS frame, the UL access zone can be configured so that it is received after 1/2 AMSRTD or later on the basis of the DL relay zone. This is shown as an option 2 in FIG. 7. In the case of the option 2, the UL access zone can be configured so that the relay MS can transmit a signal after 1/2 AMSRTD or later as compared with the option 1. If the RS is sought to transmit a signal in the UL relay zone after receiving a signal in the UL access zone, it requires the time ARSRTG. If the time interval between the UL access zone and the UL relay zone of the RS frame is greater than or equal to the ARSRTG, the RS does not have problem in receiving a signal transmitted by the relay MS. However, if the time interval between the UL access zone and the UL relay zone of the RS frame is small than the ARSRTG, the RS can have a problem in receiving a signal transmitted by the relay MS. This is because the RS may be obliged to receive a signal transmitted by the relay MS in the operation mode switching process. In such a case, for example, some or all of the last symbols of the UL access zone of the RS frame can be configured as a transition time, and a signal may not be received. In this case, the transition time can be called a Relay Receive to transmit Transition Interval (R-RTI). The terminology R-RTI is used to indicate that it is required because of an

operation of an RS receiving a signal from to a relay MS and then transmitting a signal to a BS. The transition time is indicated by (R) 711 in FIG. 7. A region indicated by the transition time can be greater than or equal to 1/2 AMSRTD in the time domain, and it can correspond to the time as much as a maximum of one symbol.

[0079] If the RS is sought to transmit a signal in the UL relay zone, the BS receives the signal after 1/2 ARSRTD. Accordingly, from a standpoint of the BS, the time required between the DL frame region and the UL frame region can be 1/2 ARSRTD + 1/2 AMSRTD + ARSRTG + 1/2 ARSRTD in the case of the option 2.

[0080] In the options 1 and 2, if the time required between the DL frame region and the UL frame region from a standpoint of the BS is greater than the TTG of the BS frame, the RS has to use some symbols for a transition time.

[0081] FIG. 8 is a diagram showing a TDD frame structure.

[0082] In FIG. 8, it is assumed that all stations have the same propagation delay time of 1/2 RTD, for convenience sake. In case where an ARSTTG is smaller than or equal to 1/2 RTD, the DL frame structure of an RS has the same as the DL frame structure of a BS. However, if the ARSTTG is greater than the 1/2 RTD, two options are possible. According to the first option, in the DL subframe of an RS frame, some symbols can be used as a transition time. The symbols used as the transition time can be used for the time interval of (ARSTTG - 1/2 RTD).

[0083] According to the second option, if (RTG + 1/2 RTD) is temporally longer than (ARSTTG - 1/2 RTD), the DL access zone of an RS frame is transmitted before the DL access zone of a BS frame by (ARSTTG - 1/2 RTD). That is, a time shift frame structure is used. Here, the RTG is placed between the UL relay zone of a frame (n-1) of the BS and the DL access zone of a frame n of the BS. If a value of (RTG + 1/2 RTD) is greater than a value of (ARSTTG - 1/2 RTD), synchronization between frames is not influenced although the RS advances the transmission of the DL access zone by the value (ARSTTG - 1/2 RTD). In general, an ARSTTG is longer than 1/2 RTD. Further, in most frame structures, (RTG + 1/2 RTD) is longer than (ARSTTG - 1/2 RTD).

[0084] If (ARSRTG + RTD) is smaller than or equal to a TTG, the UL access zone of an RS can be received after a lapse of 1/2 RTD since a DL relay zone was received. If the (ARSRTG + RTD) is greater than the TTG, the UL access zone is received after a lapse of the 1/2 RTD since the DL relay zone was received, but some symbols of the UL access zone may must be used for a transition time. The time necessary for the transition time can be represented by (TTG - ARSRTG - RTD), and one symbol can be used as the transition time. In general, assuming a serving BS having the cell coverage of 5 km, (ARSRTG + RTD) is smaller than or equal to the TTG. This is true in most cases other than the case of a 1/16 CP in 5, 10, and 20 MHz. Further, in most cases

other than the case of a 1/4 CP in 8.75 MHz, (1/2 RTD + Idle Time) is greater than (ARSTTG - 1/2 RTD).

[0085] In the above description, the transition time (i.e., the R-TTI or the R-RTI) can be expressed using the following equation. First, the TDD frame of an RS is described below.

[0086] In the TDD frame of an RS, the R-TTI (Relay Transmit to receive Transition Interval) can be included in the DL access zone or the DL relay zone in the downlink, and the R-RTI (Relay Receive to transmit Transition Interval) can be included in the UL access zone or the UL relay zone in the uplink. The R-TTI and the R-RTI can be used to control the timing of frames by taking a TTG and RTD between an RS and a superordinate station into consideration. The R-TTI and the R-RTI may be 0 and can have a value corresponding to a maximum of one symbol.

[0087] In case where the operation of an RS switches from the transmission mode to the reception mode, the last symbol of a DL access zone of the RS frame or the first symbol of a DL relay zone thereof can be used as an R-TTI. In this case, a symbol time is set on the basis of a BS frame. The R-TTI can be calculated using the following equation (In all the following equations, an RSTTG means an ARSTTG, an RSRTG means an ARSRTG, and R_RTD means ARSRTD).

[0088] [Math.1]

$$R-TTI=\begin{cases}0 & if\ R\_RTD/2 \geq RSTTG \\ T_s & if\ R\_RTD/2 < RSTTG\end{cases}$$

[0089] In Equation 1 above and the following equations, T_s indicates an OFDMA symbol time.

[0090] 1. Time-shifted UL frame structure

[0091] The UL frame of an RS can be temporally shifted before the UL frame of a BS and then transmitted. Such a frame structure is called a time-shifted UL frame structure. Assuming that the time in which the UL frame of an RS is advanced on the basis of the UL frame of a BS is T_{adv}, the time T_{adv} can be given as, for example, TTG - R_IdleTime. The R_IdleTime is an idle time interval between a DL relay zone and an UL access zone in an RS frame. The R_IdleTime can have a value equal to or smaller than the TTG. That is, the time-shifted UL frame structure can be applied to a case in which the R_IdleTime has a value smaller than the TTG.

[0092] In the time-shifted UL frame structure, in case where the operation of an RS is switched from the reception mode to the transmission mode, the last symbol of an UL access zone of an RS frame or the first symbol of an UL relay zone thereof can be used as an R-RTI. The R-RTI can be used to match an RSRTG and R_RTD between the RS and a superordinate station. In this case, a symbol time is set on the basis of a BS

frame. The R-RTI can be calculated using the following equation.

[0093] [Math.2]

$$R-RTI=\begin{cases} 0 \\ \quad : if\ TTG-R\_IdleTime-R\_RTD \geq RSRTG \\ \lceil (RSRTG+R\_IdleTime+R\_RTD-TTG)/T_s \rceil \\ \quad : if\ TTG-R\_IdleTime-R\_RTD < RSRTG \end{cases}$$

[0094] In the above equation, R_RTD is round trip delay between an RS and a superordinate station (i.e., a BS). R_IdleTime is equal to or greater than M_RTD/2. Here, M_RTD is round trip delay between an MS and a superordinate station (e.g., an RS). If R_IdleTime is equal to a TTG, R-RTI can be equal to the time of one OFDMA symbol.

[0095] 2. Time-aligned UL frame structure

[0096] The UL frame of an RS can be temporally aligned with the UL frame of a BS and then transmitted. Such a frame structure is called a time-aligned UL frame structure.

[0097] In the time-aligned UL frame structure, in case where the operation of an RS is switched from the reception mode to the transmission mode, the last symbol of an UL access zone of an RS frame or the first symbol of an UL relay zone thereof can be used as an R-RTI. The R-RTI can be used to match an RSRTG and R_RTD between the RS and a superordinate station.

[0098] FIG. 9 is a diagram showing an example of a TDD frame structure.

[0099] Referring to FIG. 9, the ratio of DL subframes to UL subframes is 5:3. The TDD frame structure can be applied to any one of, for example, channel bandwidths 5, 10, and 20 MHz (G=1/8). The number of subframes allocated to a relay zone is 2 in the downlink, and the number of subframes allocated to a relay zone in the uplink is 1.

[0100] In an RS TDD frame, an R-TTI (Relay Transmit to receive Transition Interval) can be included in a DL access zone in the downlink, and an R-RTI (Relay Receive to transmit Transition Interval) can be included in an UL relay zone in the uplink.

[0101] FIG. 10 is a diagram showing an FDD DL frame structure.

[0102] It is assumed that an RS uses an RS frame time-aligned with a BS frame, as shown in FIG. 10. If an ARSTTG is smaller than or equal to 1/2 RTD, the DL frame structure of the RS can be used in the same manner as the DL frame structure of a BS.

[0103] If the ARSTTG is greater than the 1/2 RTD, some symbols of the DL subframe of the RS can be used as a transition time. The transition time is the time including (ARSTTG-1/2 RTD) and can be the time corresponding to a maximum of one symbol. For example, in case where the RS receives a signal from the BS in the DL subframe 4(DL SF4), the RS is operated in the transmission mode in the DL subframe 3 and then operated in the reception mode in the DL subframe 4. Accordingly, an ARSTTG

between the DL subframe 3 and the DL subframe 4 is required. Further, the RS receives a signal, transmitted in the DL subframe 4 of the BS frame, after 1/2 RTD. Accordingly, if the ARSTTG is greater than the 1/2 RTD, the time as much as (ARSTTG - 1/2 RTD) is required as a transition time. If the transition time is included in the unit of a symbol, a maximum of one symbol can be used. In other words, the time of the ARSTTG is required between the DL subframe 3 and the DL subframe 4 in the RS frame. Here, if the time of the ARSTTG is smaller than or equal to the 1/2 RTD, it does not become a problem. However, if the time of the ARSTTG is greater than the 1/2 RTD, some symbols of the DL subframe 3 or of the DL subframe 4 are resultantly used as the transition time.

[0104] If (1/2 RTD + IdleTime) is longer than the (ARSTTG - 1/2 RTD), the RS can transmit the DL access zone earlier by the (ARSTTG - 1/2 RTD) without time-aligning the DL access zone of the RS and the DL access zone of the BS. However, if the (1/2 RTD + IdleTime) is shorter than or equal to the (ARSTTG - 1/2 RTD), the RS can use some symbols between the DL relay zone and the DL access zone of a next frame as the transition time.

[0105] In general, the ARSTTG is longer than the 1/2 RTD. Further, in most frame configurations other than the case of 8.75 MHz (1/4 CP), (1/2 RTD + IdleTime) is longer than (ARSTTG - 1/2 RTD).

[0106] A transition time (i.e., an R-TTI or an R-RTI) for the above FDD DL frame of the RS can be represented by the following equation.

[0107] In case where the operation of an RS is switched from the transmission mode to the reception mode, the last symbol of a DL access zone of an RS frame or the first symbol of an DL relay zone thereof can be used as an R-TTI. The R-TTI can be used to match an ARSTTG and R_RTD between the RS and a superordinate station. In this case, a symbol time is set on the basis of a BS frame. The R-TTI can be calculated using the following equation.

[0108] [Math.3]

$$R-TTI=\begin{cases}0 & if\ \ R\_RTD/2 \geq RSTTG\\ T_s & if\ \ R\_RTD/2 < RSTTG\end{cases}$$

[0109] In case where the operation of the RS is switched from the reception mode to the transmission mode, (the last symbol of a DL relay zone of an RS frame and IdleTime) or (IdleTime and the first symbol of a DL access zone of a next frame) can be used as the R-RTI. In alternative example, IdleTime can be used as the R-RTI. That is, the R-RTI can be calculated using the following equation.

[0110]

[Math.4]

$$R-RTI=\begin{cases} IdleTime & if\ IdleTime \geq (RSRTG+R\_RTD/2) \\ T_s+IdleTime & if\ IdleTime < (RSRTG+R\_RTD/2) \end{cases}$$

[0111] FIG. 11 is a diagram showing an FDD UL frame structure.

[0112] In case where an RS uses an RS frame not time-aligned with a BS frame as shown in FIG. 11, if IdleTime is greater than or equal to (ARSRTG + ARSTTG), the UL access zone of the RS can be transmitted by the ARSRTG before the UL access zone of a BS.

[0113] In case where an RS uses an RS frame not time-aligned with a BS frame as shown in FIG. 11, or IdleTime is smaller than (ARSRTG + ARSTTG) although time-alignment has not been performed, some symbols of an UL subframe of the RS frame can be used as a transition time. For example, one symbol of the UL subframe can be divided and used in two transition times. One of the transition times can be used between the UL access zone and the UL relay zone of the RS frame for the purpose of the ARSRTG, and the other of the transition times can be used between the UL relay zone and the UL access zone of the RS frame for the purpose of the ARSTTG.

[0114] A transition time (i.e., an R-TTI or an R-RTI) for the above FDD UL frame of the RS can be expressed using the following equation.

[0115] 1. Time-shifted UL frame structure

[0116] The UL frame of an RS can be a time-shifted UL frame that has been temporally shifted before the UL frame of a BS. Assuming that the time in which the UL frame of the RS is advanced on the basis of the UL frame of the BS is T_{adv}, the time T_{adv} corresponds to a case in which the time is not 0. The time T_{adv} can be given as, for example, IdleTime - R_IdleTime.

[0117] In the time-shifted UL frame structure, in case where the operation of an RS is switched from the reception mode to the transmission mode or from the transmission mode to the reception mode, (the last symbol of an UL access zone of an RS frame + IdleTime) or (the first symbol of an UL relay zone of the RS frame + IdleTime) can be divided and used in an R-RTI and an R-TTI. The R-TTI or the R-RTI can be in common calculated using the following equation.

[0118] [Math.5]

$$R-TTI=R-RTI=\begin{cases} 0 & if\ RSTTG+RSRTG \leq IdleTime \\ (T_s+IdleTime)/2 & if\ RSTTG+RSRTG > IdleTime \end{cases}$$

[0119] 2. Time-aligned UL frame structure

[0120] The UL frame of an RS can be time-aligned with the UL frame of a BS and then transmitted. Such a frame structure is called a time-aligned UL frame structure. That is, this corresponds to a case where the time T_{adv} is 0.

[0121] In the time-aligned UL frame structure, in case where the operation of an RS is switched from the reception mode to the transmission mode, the last symbol of an UL access zone of an RS frame or the first symbol of an UL relay zone thereof can be used as the R-RTI. Further, in case where the operation of the RS is switched from the transmission mode to the reception mode, if an RSTTG is greater than (R_RTD/2 + IdleTime), the last symbol of the UL relay zone can be used as the R-TTI.

[0122] FIG. 12 is a diagram showing an example including a switching time in an FDD frame.

[0123] FIG. 12 shows an example in which in an FDD DL frame from among RS frames, an R-TTI is included in the last symbol of a DL access zone and an R-RTI is included in the last symbol of a DL relay zone and/or IdleTime. Further, this drawing shows an example in which in an FDD UL frame from among RS frames, an R-RTI is included in the first symbol of an UL relay zone and an R-TTI is included in the last symbol of an UL relay zone and/or IdleTIme.

[0124] As described above, an RS can include the transition time, such as the R-TTI or the R-RTI, in a specific subframe by considering whether an RS frame is a TDD frame or an FDD frame, transmission mode and reception mode switching times such as the RSTTG and the RSRTG, a propagation delay time, IdleTime, and R_IdleTime. Accordingly, according to the present invention, communication can be performed with an RS included in a wireless communication system even without greatly changing a frame structure between the existing BS and the existing macro MS.

[0125] FIG. 13 is a diagram showing the construction of an RS and a BS.

[0126] The BS 500 includes a processor, 510, memory, 530, and an Radio Frequency (RF) unit 520. The processor 510 performs scheduling for allocating radio resources to an RS and receiving a signal from the RS. In the above embodiments, the procedures, schemes, and functions performed by a BS can be implemented by the processor 510. The memory 530 is coupled to the processor 510 and configured to store various pieces of information for driving the processor 510. The RF unit 520 is coupled to the processor 510 and configured to transmit and/or receive a radio signal. A BS can become a source station or a destination station.

[0127] The RS 600 includes a processor 610, memory 620, and an RF unit 630. In the above embodiments, the procedures, schemes, and functions performed by an RS can be implemented by the processor 610. The memory 620 is coupled to the processor 610 and configured to store various pieces of information for driving the processor 610. The RF unit 630 is coupled to the processor 610 and configured to transmit and/or receive a radio signal.

[0128] The processor 510, 610 can include an Application-Specific Integrated Circuit (ASIC), other chipset, a logic circuit, and/or a data processor. The memory 530, 620

can include Read-Only Memory (ROM), Random Access Memory (RAM), flash memory, a memory card, a storage medium and/or other storage device. The RF unit 520, 630 can include a baseband circuit for processing a radio signal. When the above embodiments are implemented in software, the above schemes can be implemented using a module (or process or function) for performing the above functions. The module can be stored in the memory 530, 620 and executed by the processor 510, 610. The memory 530, 620 can be placed inside or outside the processor 510, 610 and coupled to the processor 510, 610 using a variety of well-known means.

[0129] The present invention can be implemented in hardware or software or using a combination of them. The hardware implementations can be realized using an Application-Specific Integrated Circuit (ASIC), Digital Signal Processing (DSP), a Programmable Logic Device (PLD), a Field Programmable Gate Array (FPGA), a processor, a controller, a microprocessor, other electronic unit, or a combination of them which are designed to perform the above-described functions. The software implementations can be realized using a module for performing the above-described functions. Software can be stored in a memory unit and executed by a processor. Various means well known to those skilled in the art can be used as the memory unit or the processor.

[0130] An RS can perform communication with a BS or a relay MS by taking an operation switching time between a reception mode and a transmission mode and a propagation delay time required to transmit and receive a signal into consideration. Accordingly, communication can be performed with an RS included in a wireless communication system even without greatly changing a frame structure between the existing BS and the existing macro MS.

[0131] While the present invention has been shown and described in connection with the exemplary embodiments thereof, those skilled in the art will appreciate that the present invention may be changed and modified in various ways without departing from the spirit and scope of the present invention as defined in the following claims.

Claims

[Claim 1] A method of a Relay Station (RS) transmitting and receiving a signal in a wireless communication system including the RS, the method comprising: receiving frame configuration information about an RS frame from a Base Station (BS);configuring a downlink (DL) access zone in which a signal is transmitted to a relay Mobile Station (MS) connected to the RS and a DL relay zone in which a signal is received from the BS in the RS frame on the basis of the frame configuration information;comparing a time necessary to switch an operation from the DL access zone to the DL relay zone and a propagation delay time taken to receive the signal from the BS; configuring some symbols of the DL access zone or the DL relay zone as a transition time according to a result of the comparison;transmitting the signal to the relay MS in the DL access zone; andreceiving the signal from the BS in the DL relay zone.

[Claim 2] The method of claim 1, wherein the transition time is configured in a last symbol of the DL access zone or a first symbol of the DL relay zone.

[Claim 3] The method of claim 1, wherein in case where the time necessary to switch the operation is indicated by an RSTTG, the propagation delay time is indicated by R_RTD/2, and the transition time is indicated by an R-TTI, the transition time is calculated using an equation below.

$$R-TTI = \begin{cases} 0 & if\ R\_RTD/2 \geq RSTTG \\ T_s & if\ R\_RTD/2 < RSTTG \end{cases}$$

In the above equation, T_s is one symbol time.

[Claim 4] The method of claim 1, further comprising:in case where the RS frame is a Frequency Division Duplex (FDD) frame, comparing a time necessary to switch an operation from the DL relay zone to a DL access zone of a next frame, the propagation delay time taken to receive the signal from the BS, and an idle time of a BS frame; andconfiguring the transition time in a last symbol of the DL relay zone and in the idle time according to a result of the comparison.

[Claim 5] The method of claim 4, wherein the transition time configured in the last symbol of the DL relay zone and in the idle time is calculated using an equation below.

$$R-RTI=\begin{cases} Idle\,Time & if\ Idle\,Time \geq (RSRTG+R\_RTD/2) \\ T_s+Idle\,Time & if\ Idle\,Time < (RSRTG+R\_RTD/2) \end{cases}$$

[Claim 6] A method of an RS transmitting and receiving a signal in a wireless communication system including the RS, the method comprising: receiving frame configuration information about an RS frame from a BS;configuring an uplink (UL) access zone in which a signal is received from a relay MS connected to the RS and an UL relay zone in which a signal is transmitted to the BS in the RS frame on the basis of the frame configuration information;receiving the signal from the relay MS in the UL access zone; andtransmitting the signal to the BS in the UL relay zone,wherein the UL access zone is time-aligned with an UL access zone of a BS frame and then transmitted or transmitted before the UL access zone of the BS frame by a specific time interval.

[Claim 7] The method of claim 6, wherein in case where the RS frame is a FDD frame, assuming that a time necessary to switch an operation from the UL access zone to the UL relay zone is an RSRTG and a time necessary to switch an operation from the UL relay zone to an UL access zone of a frame subsequent to the RS frame is an RSTTG, if a sum of the RSRTG and the RSTTG is smaller than an idle time of the BS frame, the specific time interval is the RSRTG.

[Claim 8] The method of claim 7, further comprising:comparing the sum of the RSTTG and the RSRTG and the idle time of the BS frame; andconfiguring some symbols of the UL access zone or the UL relay zone as a transition time according to a result of the comparison.

[Claim 9] The method of claim 8, wherein in case where the idle time of the BS frame is IdleTime, a transition time configured when the operation is switched from the UL access zone to the UL relay zone is a Relay Receive to transmit Transition Interval (R-RTI), and a transition time configured when the operation is switched from the UL relay zone to the UL access zone of the frame subsequent to the RS frame is a Relay Transmit to receive Transition Interval (R-TTI), the R-RTI and the R-TTI are calculated using an equation below.

$$R-TTI=R-RTI=\begin{cases} 0 & if\ RSTTG+RSRTG \leq IdleTime \\ (T_s+IdleTime)/2 & if\ RSTTG+RSRTG > IdleTime \end{cases}$$

[Claim 10] The method of claim 6, wherein in case where the UL access zone is time-aligned with the UL access zone of the BS frame and then transmitted, a last symbol of the UL access zone or a first symbol of the

UL relay zone is used as an R-RTI.

[Claim 11] The method of claim 10, wherein assuming that a time necessary to switch an operation from the UL relay zone to an UL access zone of a frame subsequent to the RS frame is an RSTTG, if the RSTTG is greater than a sum of a propagation delay time taken to receive the signal from the BS and an idle time of the BS frame, a last symbol of the relay zone is used as the R-TTI.

[Claim 12] A method of an RS transmitting and receiving a signal in a wireless communication system including the RS, the method comprising:receiving frame configuration information about an RS frame from a BS;configuring a frame, comprising a DL access zone in which a signal is transmitted to a relay MS connected to the RS, a DL relay zone in which a signal is received from the BS, an UL access zone in which a signal is received from the relay MS connected to the RS, and an UL relay zone in which a signal is transmitted to the BS, on the basis of the frame configuration information;configuring a transition time in the DL access zone or the UL relay zone;transmitting the signal in the DL access zone or the UL relay zone; and receiving the signal in the DL relay zone or the UL access zone.

[Claim 13] The method of claim 12, wherein the RS frame is a TDD frame.

[Claim 14] The method of claim 13, wherein assuming that a transition time configured in the DL access zone is an R-TTI, the R-TTI is selectively included in a last symbol of the DL access zone and calculated using an equation below.

$$R-TTI = \begin{cases} 0 & if\ \ R\_RTD/2 \geq RSTTG \\ T_s & if\ \ R\_RTD/2 < RSTTG \end{cases}$$

In the above equation, RSTTG is a time necessary for the RS to switch an operation from a transmission mode in the DL access zone to a reception mode in the DL relay zone, and R_RTD/2 is a propagation delay time that the RS takes to receive the signal from the BS.

[Claim 15] The method of claim 14, wherein in case where the UL access zone is transmitted before an UL access zone of a BS frame by a specific time, assuming that a transition time configured in the UL relay zone is an R-RTI, the R-RTI is calculated using an equation below.

$$R-RTI=\begin{cases} 0 \\ \quad : if\ TTG-R\_IdleTime-R\_RTD \geq RSRTG \\ \lceil (RSRTG+R\_IdleTime+R\_RTD-TTG)/T_s \rceil \\ \quad : if\ TTG-R\_IdleTime-R\_RTD < RSRTG \end{cases}$$

In the above equation, TTG is a time interval when an operation is switched from a transmission mode to a reception mode in the BS frame, R_IdleTime is an idle time of the RS frame, RSRTG is a time necessary to switch an operation from the UL access zone to the UL relay zone, and Ts is one symbol time, andthe specific time is a time in which the R_IdleTime is subtracted from the TTG.

[Claim 16] An RS, comprising:a Radio Frequency (RF) unit configured to transmit and receive a radio signal; anda processor connected to the RF unit,wherein the processor receives frame configuration information about an RS frame from a BS, configures a DL access zone in which a signal is transmitted to a relay MS connected to the RS and a DL relay zone in which a signal is received from the BS in an RS frame on the basis of the frame configuration information, compares a time necessary to switch an operation from the DL access zone to the DL relay zone and a propagation delay time taken to receive a signal from the BS, configures some symbols of the DL access zone or the DL relay zone as a transition time according to a result of the comparison, and transmits a signal to the relay MS in the DL access zone or receives a signal from the BS in the DL relay zone.

[Claim 17] An RS, comprising:an RF unit configured to transmit and receive a radio signal; anda processor connected to the RF unit,wherein the processor receives frame configuration information about an RS frame from a BS, configures an UL access zone in which a signal is received from a relay MS connected to the RS and an UL relay zone in which a signal is transmitted to the BS in the RS frame on the basis of the frame configuration information, and receives the signal from the relay MS in the UL access zone and transmits the signal to the BS in the UL relay zone, andthe UL access zone is time-aligned with an UL access zone of a BS frame and then transmitted or transmitted before the UL access zone of the BS frame by a specific time interval.

[Claim 18] An RS, comprising:an RF unit configured to transmit and receive a radio signal; anda processor connected to the RF unit,wherein the processor receives frame configuration information about an RS frame from a BS, configures a frame, comprising a DL access zone in which a

signal is transmitted to a relay MS connected to the RS, a DL relay zone in which a signal is received from the BS, an UL access zone in which a signal is received from the relay MS connected to the RS, and an UL relay zone in which a signal is transmitted to the BS, on the basis of the frame configuration information, configures a transition time in the DL access zone or the UL relay zone, transmits the signal in the DL access zone or the UL relay zone, and receives the signal in the DL relay zone or the UL access zone.

[Fig. 1]

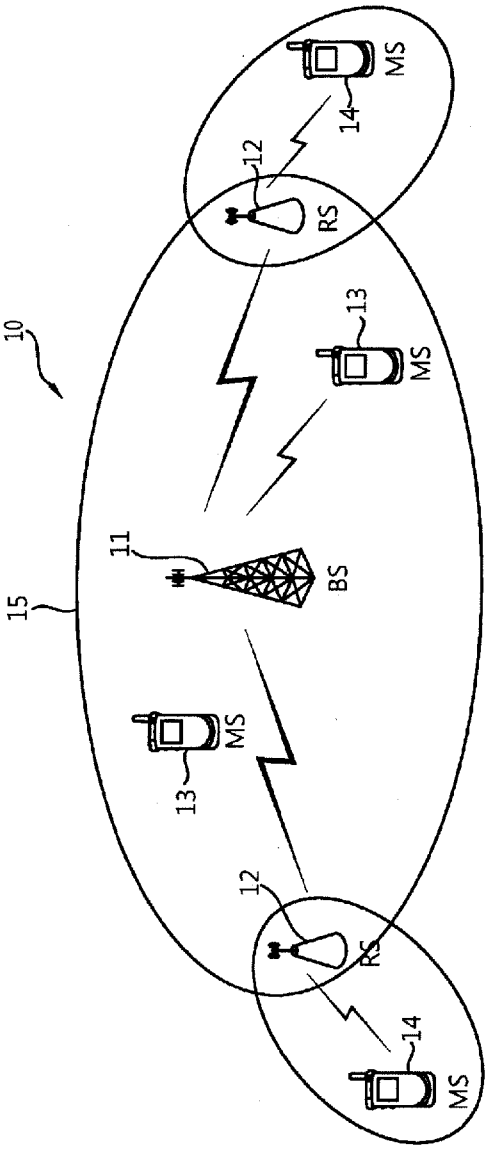

[Fig. 2]

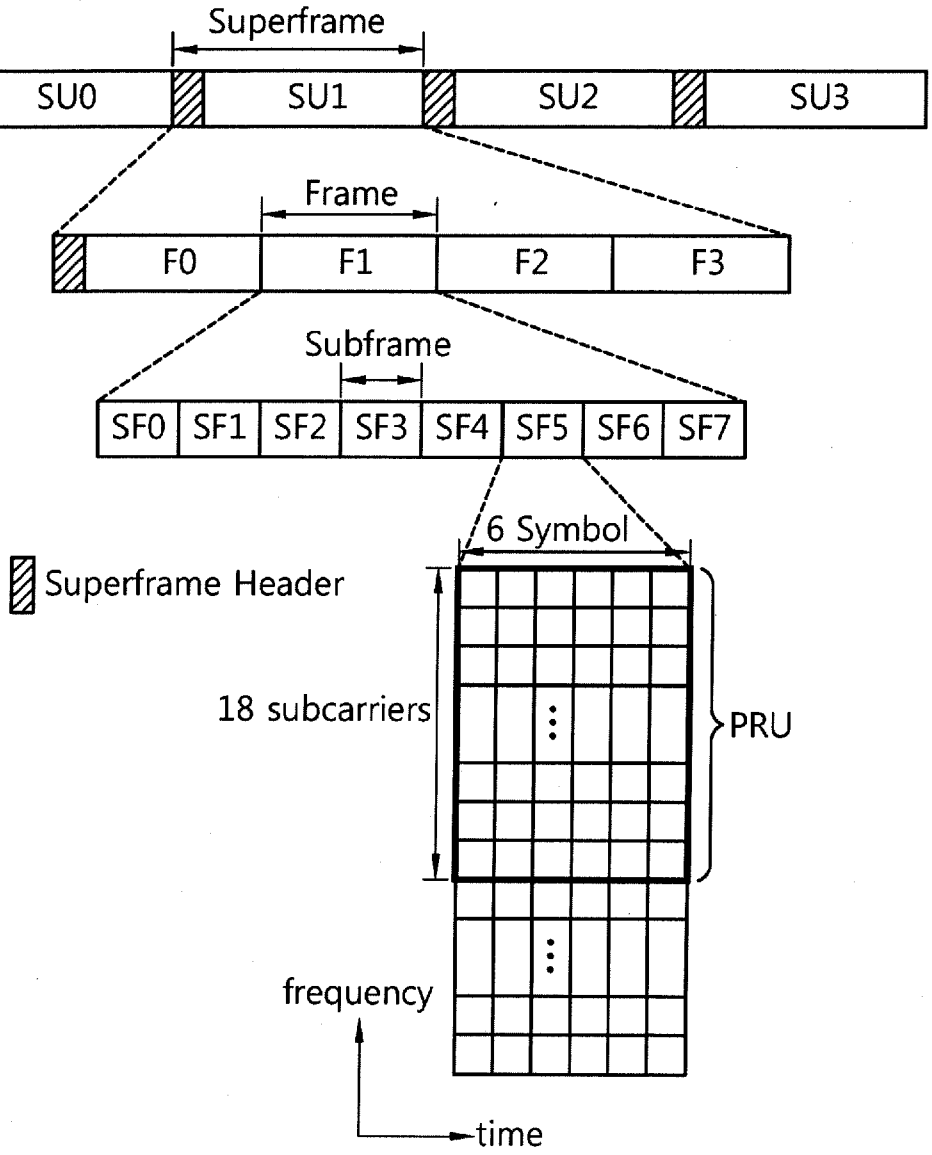
Superframe
SU0
SU1
SU2
SU3
Frame
F0
F1
F2
F3
Subframe
SF0
SF1
SF2
SF3
SF4
SF5
SF6
SF7
6 Symbol
Superframe Header
18 subcarriers
PRU
frequency
time

[Fig. 3]

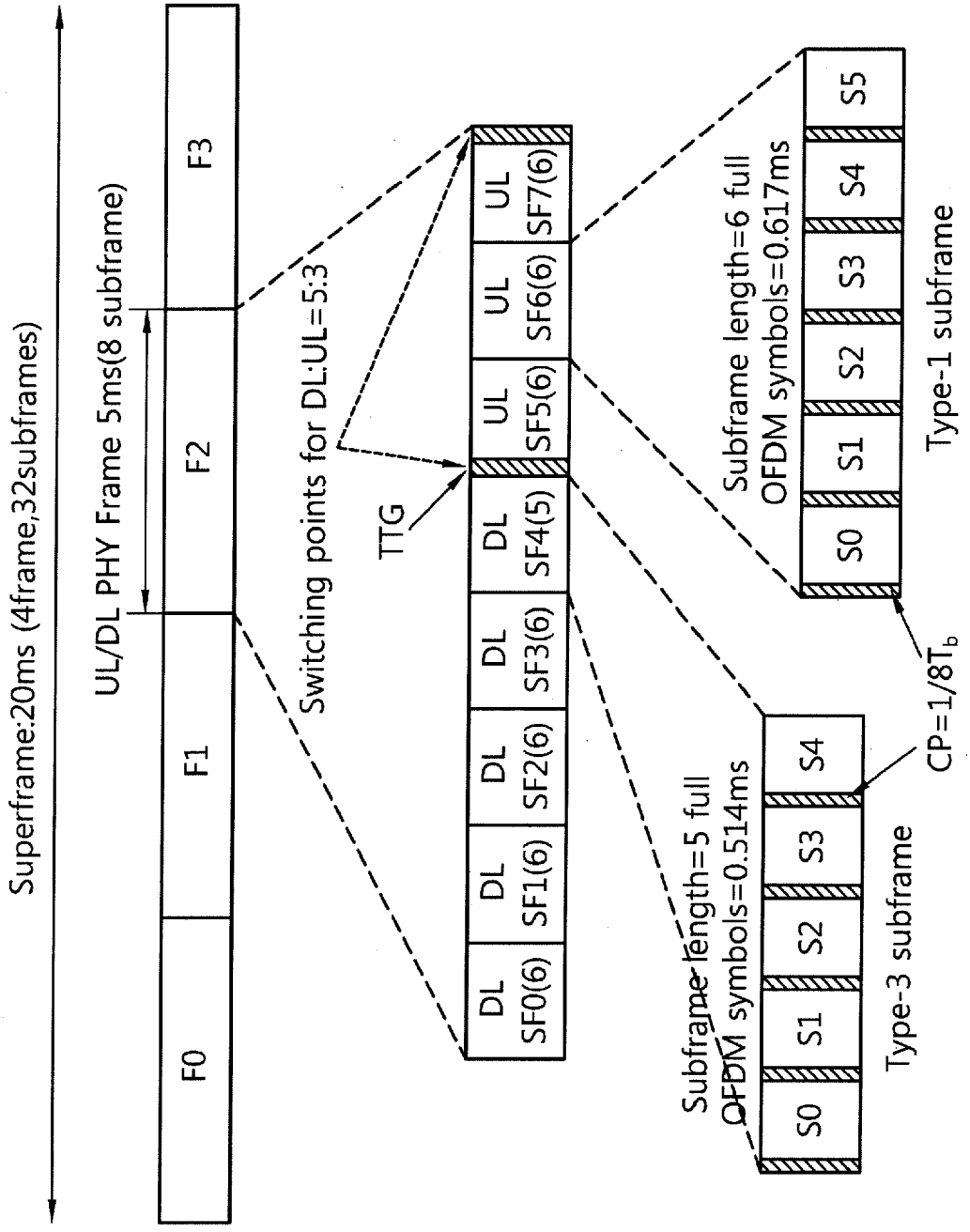
Superframe:20ms (4frame,32subframes)
UL/DL PHY Frame 5ms(8 subframe)
F0
F1
F2
F3
Switching points for DL:UL=5:3
TTG
DL SF0(6)
DL SF1(6)
DL SF2(6)
DL SF3(6)
DL SF4(5)
UL SF5(6)
UL SF6(6)
UL SF7(6)
Subframe length=5 full OFDM symbols=0.514ms
S0
S1
S2
S3
S4
Type-3 subframe
Subframe length=6 full OFDM symbols=0.617ms
S0
S1
S2
S3
S4
S5
Type-1 subframe
CP=1/8Tb

[Fig. 4]

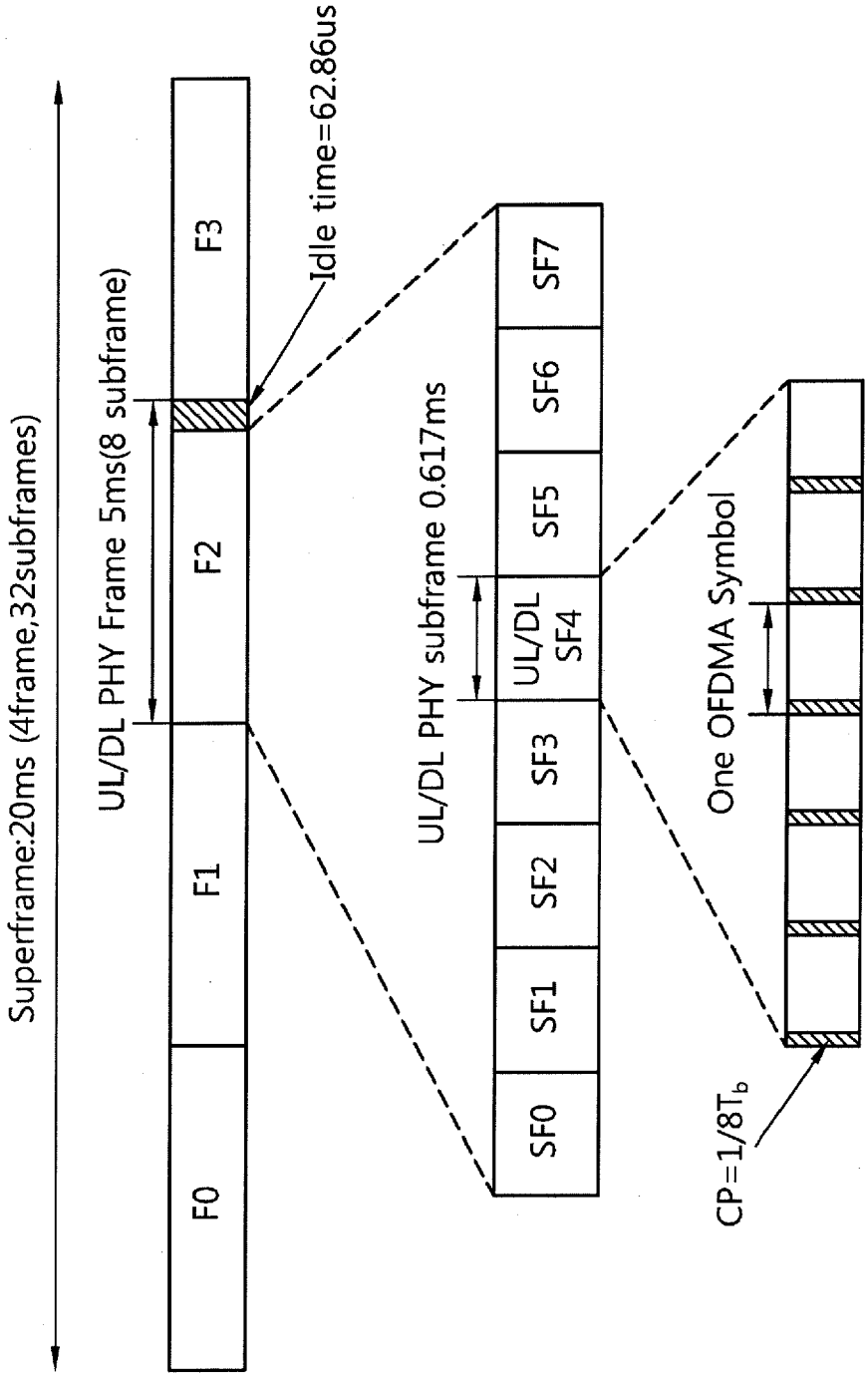
Superframe:20ms (4frame,32subframes)
UL/DL PHY Frame 5ms(8 subframe)
F0
F1
F2
F3
Idle time=62.86us
UL/DL PHY subframe 0.617ms
SF0
SF1
SF2
SF3
UL/DL SF4
SF5
SF6
SF7
One OFDMA Symbol
CP=1/8Tb

[Fig. 5]

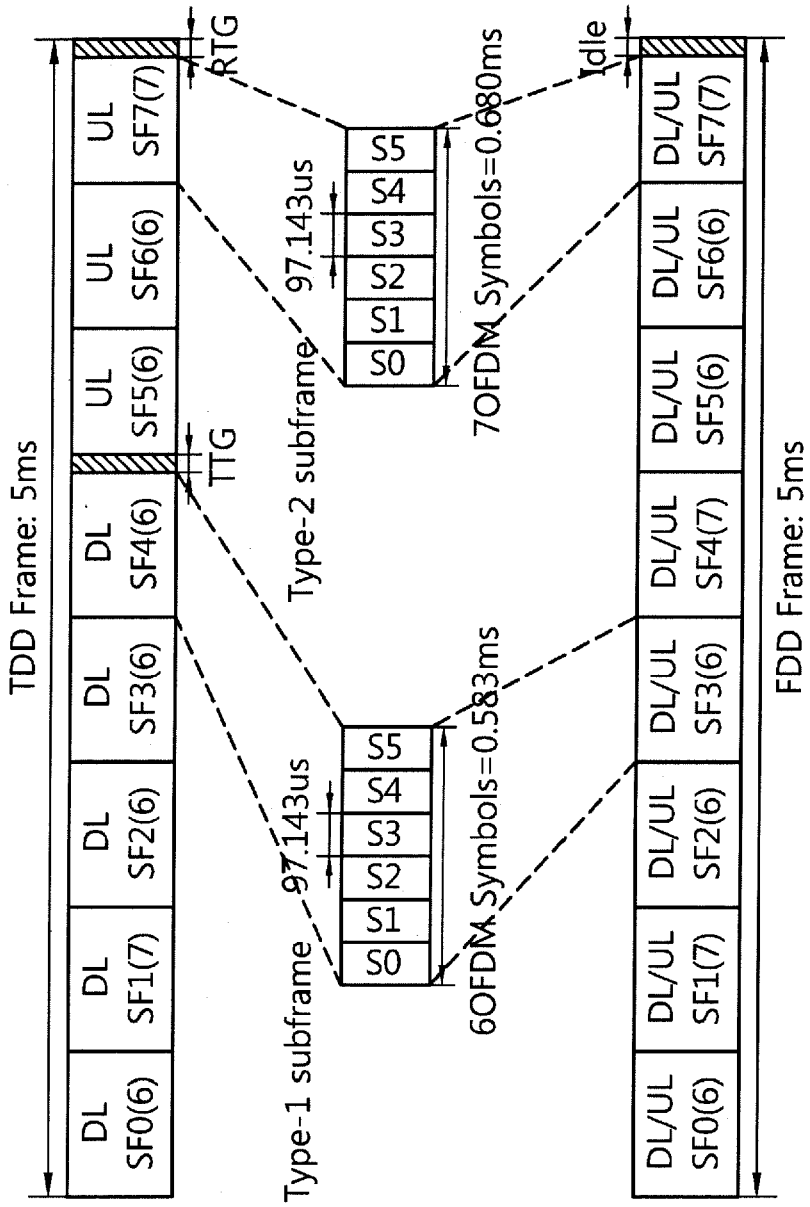
TDD Frame: 5ms
DL SF0(6)
DL SF1(7)
DL SF2(6)
DL SF3(6)
DL SF4(6)
UL SF5(6)
UL SF6(6)
UL SF7(7)
RTG
TTG
Type-2 subframe
97.143us
S5
S4
S3
S2
S1
S0
7OFDM Symbols=0.680ms
Type-1 subframe
97.143us
6OFDM Symbols=0.583ms
Idle
DL/UL SF0(6)
DL/UL SF1(7)
DL/UL SF2(6)
DL/UL SF3(6)
DL/UL SF4(7)
DL/UL SF5(6)
DL/UL SF6(6)
DL/UL SF7(7)
FDD Frame: 5ms

[Fig. 6]

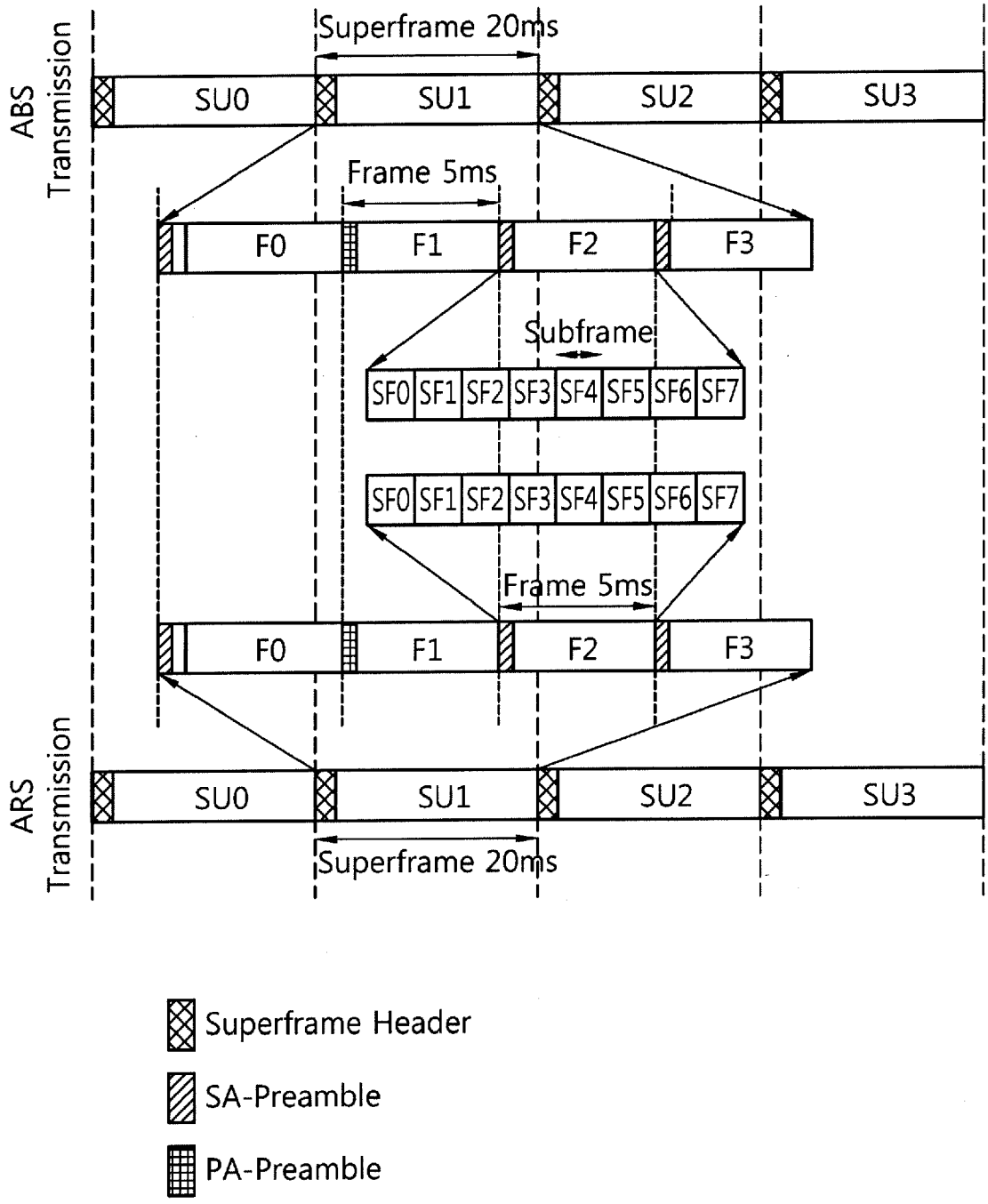
ABS Transmission
Superframe 20ms
SU0
SU1
SU2
SU3
Frame 5ms
F0
F1
F2
F3
Subframe
SF0 SF1 SF2 SF3 SF4 SF5 SF6 SF7
SF0 SF1 SF2 SF3 SF4 SF5 SF6 SF7
Frame 5ms
F0
F1
F2
F3
ARS Transmission
SU0
SU1
SU2
SU3
Superframe 20ms
Superframe Header
SA-Preamble
PA-Preamble

[Fig. 7]

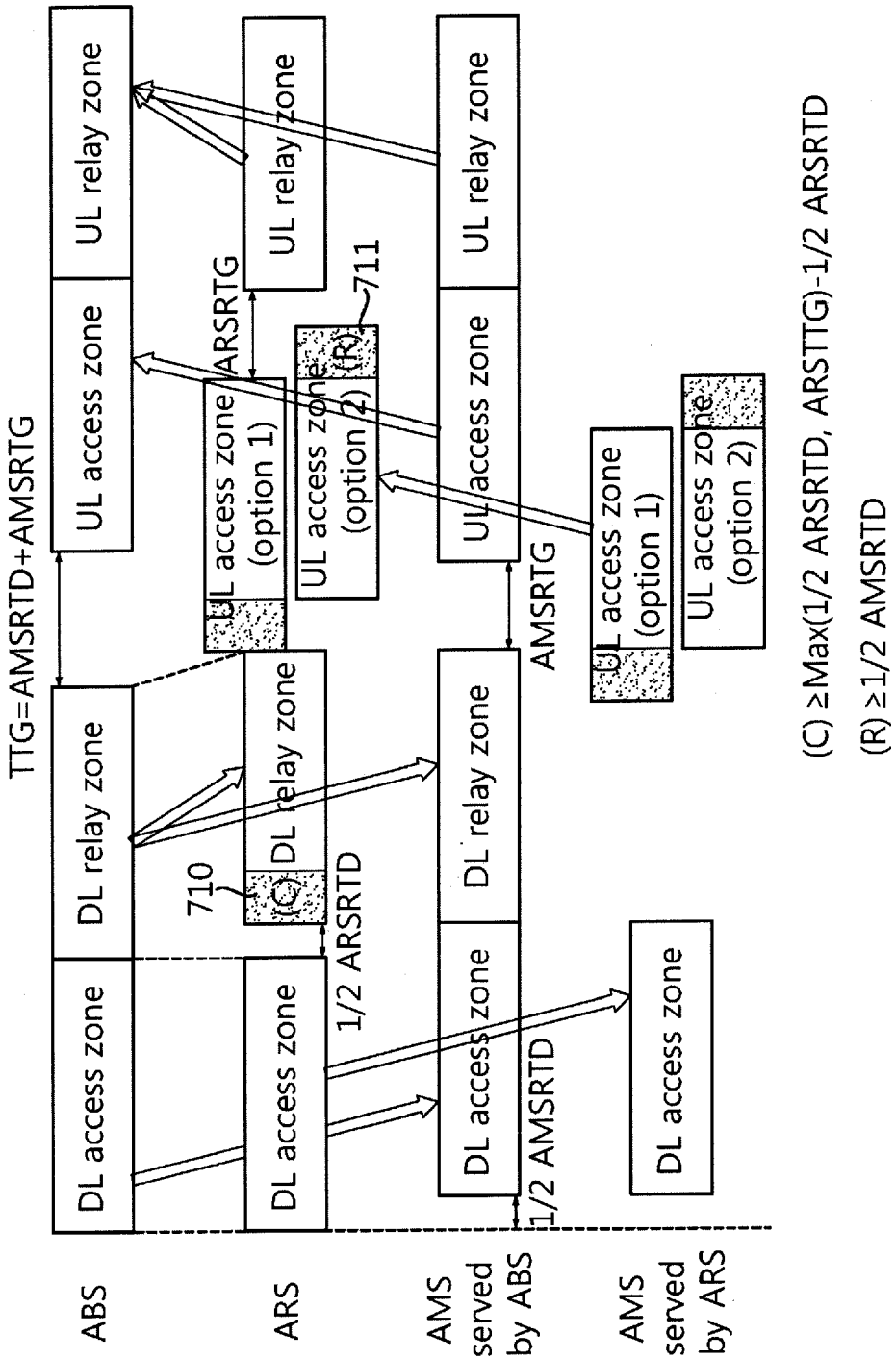
TTG=AMSRTD+AMSRTG
UL relay zone
UL access zone
DL relay zone
DL access zone
ARSRTG
UL access zone (option 1)
UL access zone (option 2)
(R)
711
710
(C)
1/2 ARSRTD
1/2 AMSRTD
AMSRTG
ABS
ARS
AMS served by ABS
AMS served by ARS
(C) ≥Max(1/2 ARSRTD, ARSTTG)-1/2 ARSRTD
(R) ≥1/2 AMSRTD

[Fig. 8]

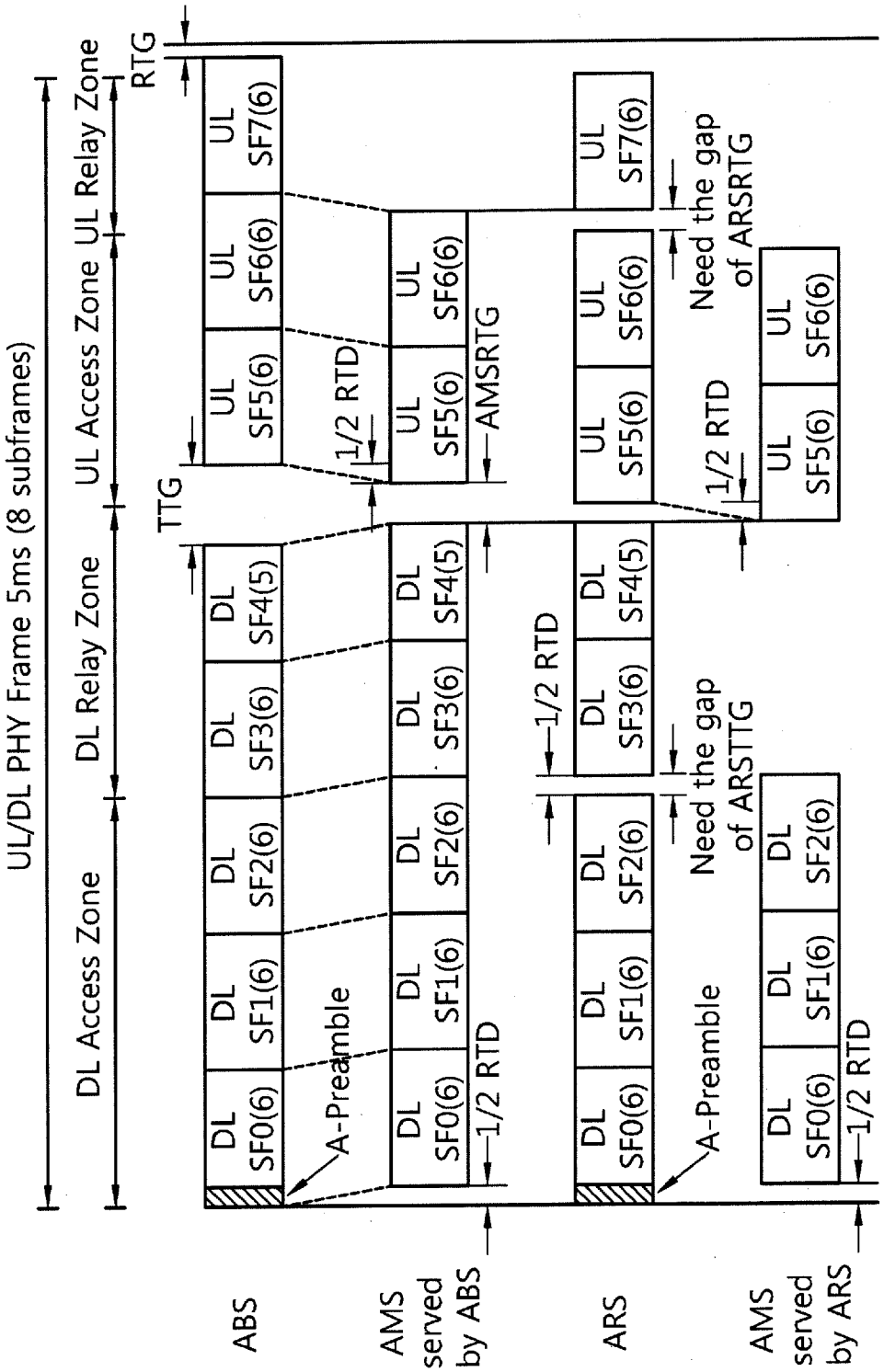
UL/DL PHY Frame 5ms (8 subframes)
DL Access Zone
DL Relay Zone
UL Access Zone
UL Relay Zone
RTG
TTG
DL SF0(6)
DL SF1(6)
DL SF2(6)
DL SF3(6)
DL SF4(5)
UL SF5(6)
UL SF6(6)
UL SF7(6)
A-Preamble
1/2 RTD
AMSRTG
Need the gap of ARSRTG
Need the gap of ARSTTG
ABS
AMS served by ABS
ARS
AMS served by ARS

[Fig. 9]

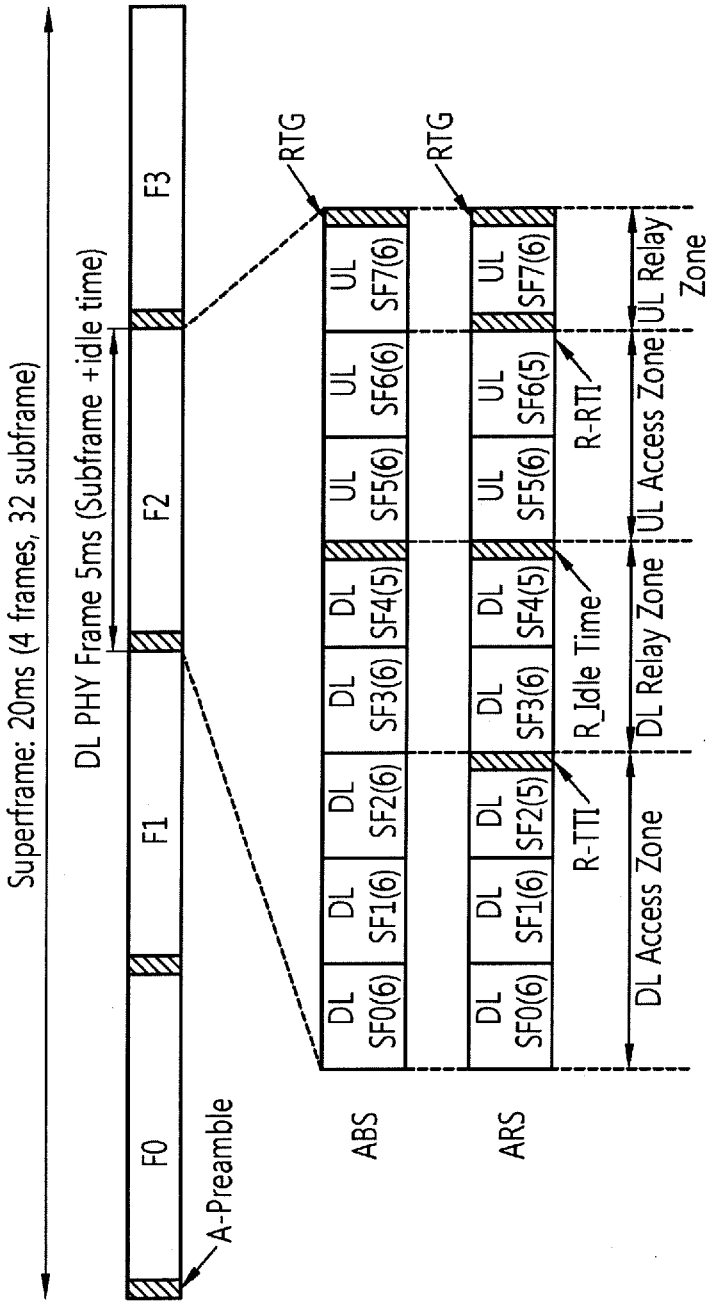
Superframe: 20ms (4 frames, 32 subframe)
DL PHY Frame 5ms (Subframe +idle time)
F0
F1
F2
F3
A-Preamble
RTG
RTG
ABS
ARS
DL SF0(6)
DL SF1(6)
DL SF2(6)
DL SF3(6)
DL SF4(5)
UL SF5(6)
UL SF6(6)
UL SF7(6)
DL SF0(6)
DL SF1(6)
DL SF2(5)
DL SF3(6)
DL SF4(5)
UL SF5(6)
UL SF6(5)
UL SF7(6)
R-TTI
R_Idle Time
R-RTI
DL Access Zone
DL Relay Zone
UL Access Zone
UL Relay Zone

[Fig. 10]

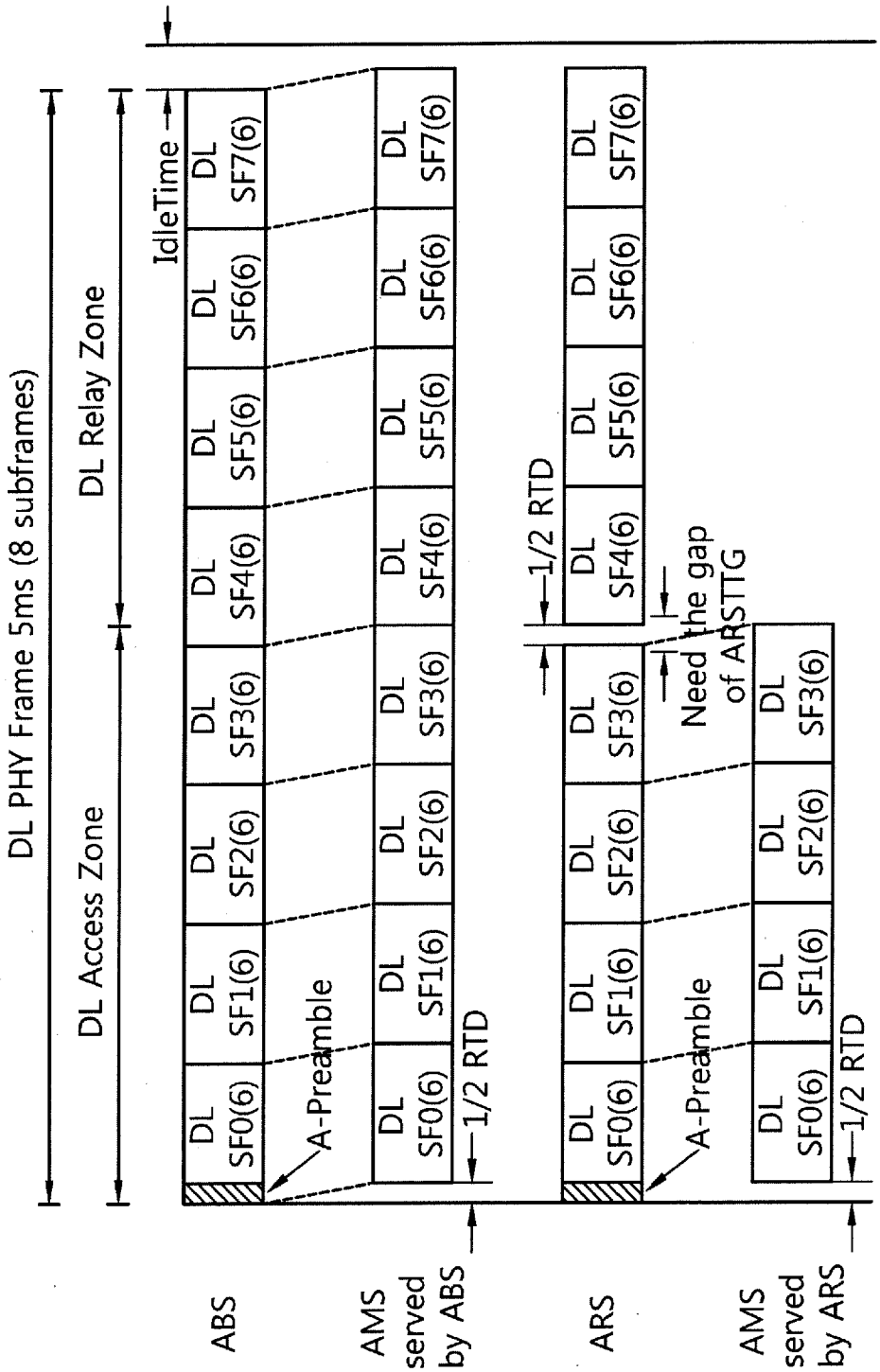
DL PHY Frame 5ms (8 subframes)
DL Access Zone
DL Relay Zone
IdleTime
DL SF0(6)
DL SF1(6)
DL SF2(6)
DL SF3(6)
DL SF4(6)
DL SF5(6)
DL SF6(6)
DL SF7(6)
A-Preamble
1/2 RTD
Need the gap of ARSTTG
ABS
AMS served by ABS
ARS
AMS served by ARS

[Fig. 11]

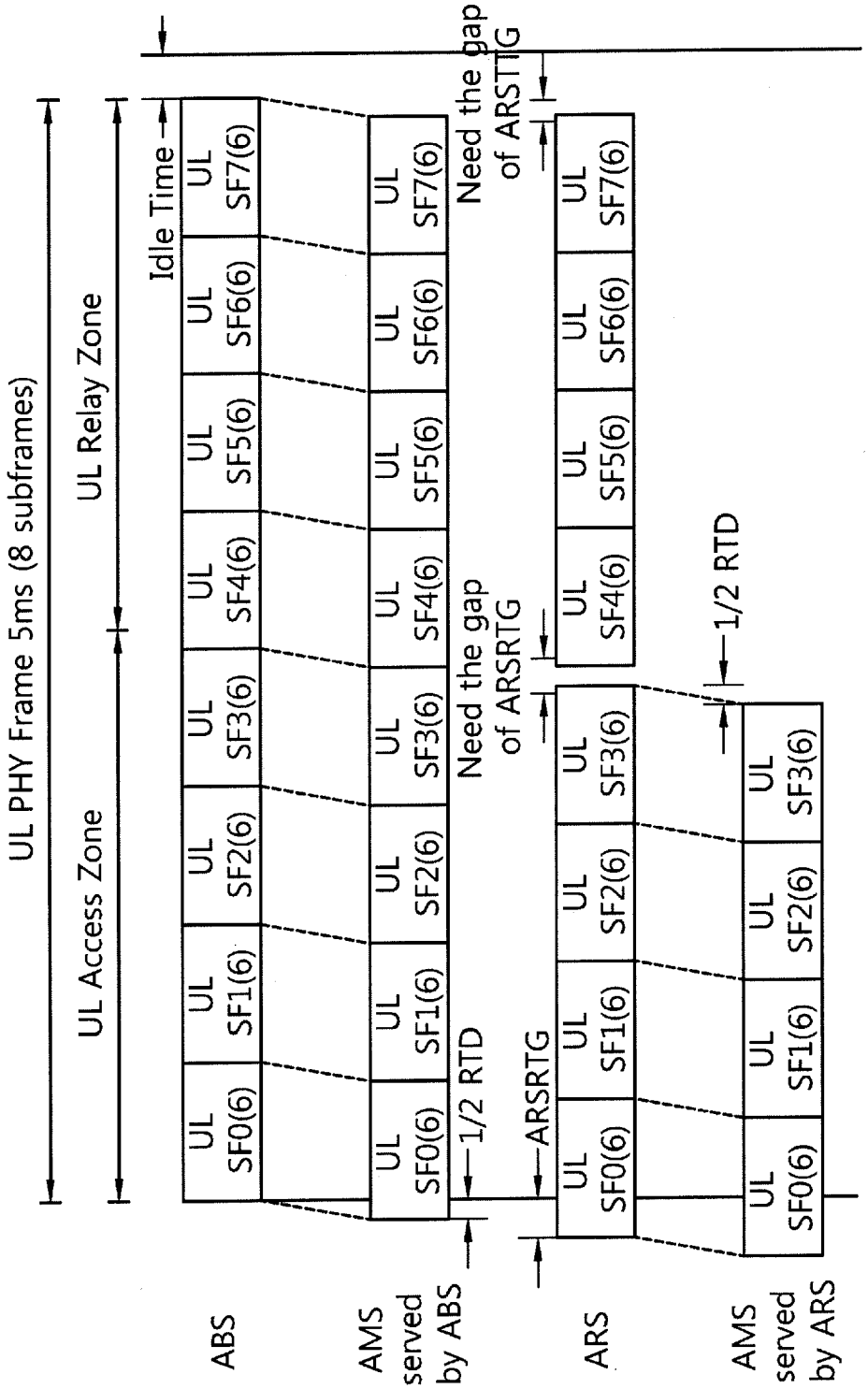
UL PHY Frame 5ms (8 subframes)
UL Access Zone
UL Relay Zone
Idle Time
Need the gap of ARSTTG
Need the gap of ARSRTG
1/2 RTD
ARSRTG
1/2 RTD
UL SF0(6)
UL SF1(6)
UL SF2(6)
UL SF3(6)
UL SF4(6)
UL SF5(6)
UL SF6(6)
UL SF7(6)
ABS
AMS served by ABS
ARS
AMS served by ARS

[Fig. 12]

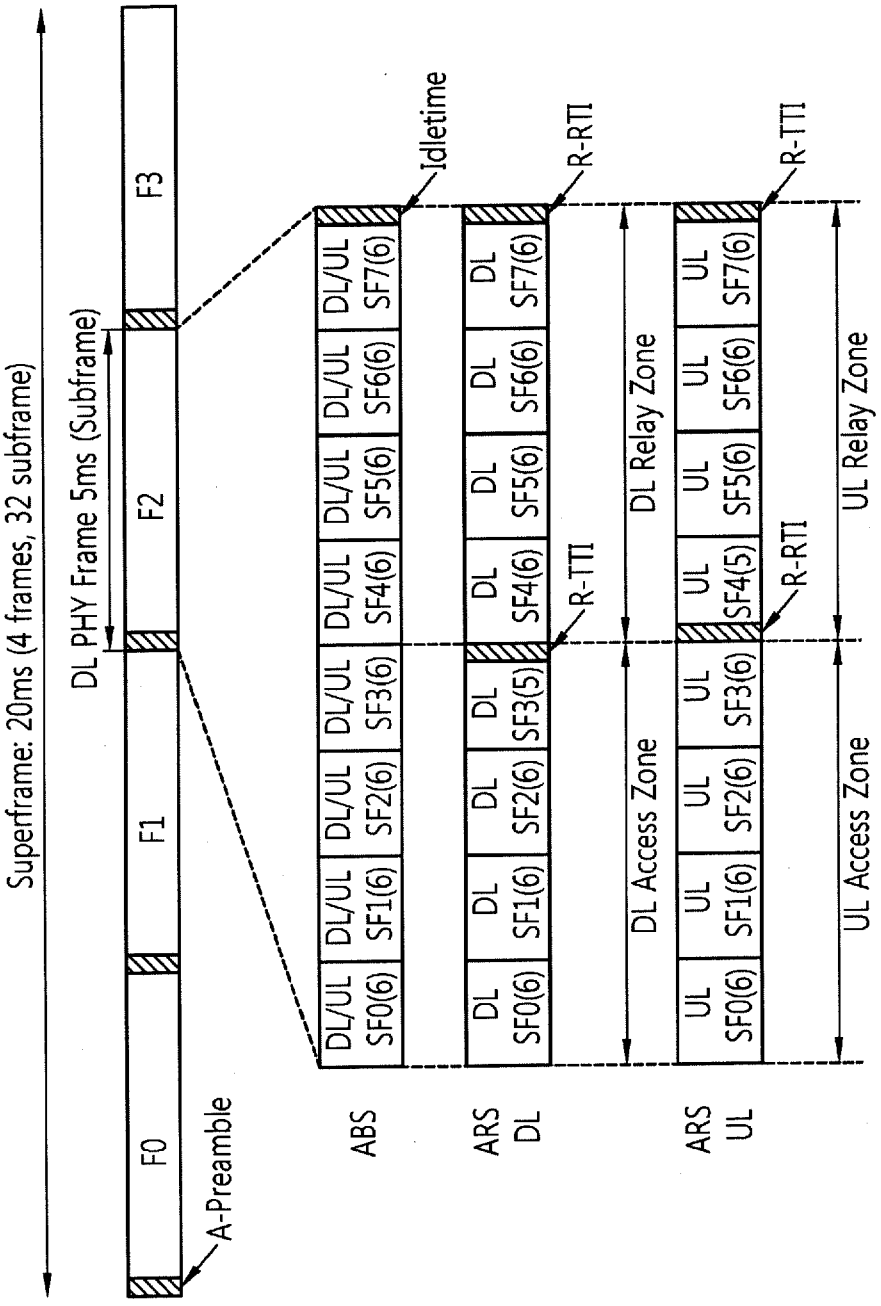
Superframe: 20ms (4 frames, 32 subframe)
DL PHY Frame 5ms (Subframe)
F0
F1
F2
F3
A-Preamble
Idletime
R-RTI
R-TTI
R-RTI
R-TTI
DL Relay Zone
UL Relay Zone
DL Access Zone
UL Access Zone
ABS
ARS DL
ARS UL
DL/UL SF0(6)
DL/UL SF1(6)
DL/UL SF2(6)
DL/UL SF3(6)
DL/UL SF4(6)
DL/UL SF5(6)
DL/UL SF6(6)
DL/UL SF7(6)
DL SF0(6)
DL SF1(6)
DL SF2(6)
DL SF3(5)
DL SF4(6)
DL SF5(6)
DL SF6(6)
DL SF7(6)
UL SF0(6)
UL SF1(6)
UL SF2(6)
UL SF3(6)
UL SF4(5)
UL SF5(6)
UL SF6(6)
UL SF7(6)

[Fig. 13]

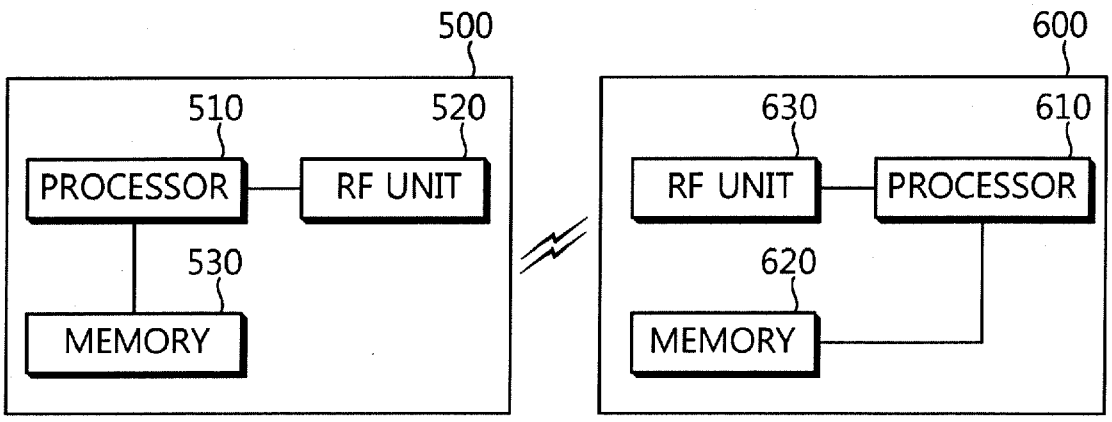
500
510
520
PROCESSOR
RF UNIT
530
MEMORY
600
630
610
RF UNIT
PROCESSOR
620
MEMORY

UNITED STATES PATENT AND TRADEMARK OFFICE

UNITED STATES DEPARTMENT OF COMMERCE
United States Patent and Trademark Office
Address: COMMISSIONER FOR PATENTS
P.O. Box 1450
Alexandria, Virginia 22313-1450
www.uspto.gov

APPLICATION NO.	FILING DATE	FIRST NAMED INVENTOR	ATTORNEY DOCKET NO.	CONFIRMATION NO.
12/886,726	09/21/2010	Jin Young Chun	002027-5007 US	1128

9629 7590 09/02/2011

MORGAN LEWIS & BOCKIUS LLP (WA)
KAREN CATALANO
1111 PENNSYLVANIA AVENUE NW
WASHINGTON, DC 20004

EXAMINER	
MAUNG, NAY AUNG	

ART UNIT	PAPER NUMBER
2618	

MAIL DATE	DELIVERY MODE
09/02/2011	PAPER

Please find below and/or attached an Office communication concerning this application or proceeding.

The time period for reply, if any, is set in the attached communication.

UNITED STATES PATENT AND TRADEMARK OFFICE

Commissioner for Patents
United States Patent and Trademark Office
P.O. Box 1450
Alexandria, VA 22313-1450
www.uspto.gov

MORGAN LEWIS & BOCKIUS LLP (WA)
KAREN CATALANO
1111 PENNSYLVANIA AVENUE NW
WASHINGTON DC 20004

In re Application of
CHUN et al.
Application No.: 12/886,726
Filed: 21 September 2010
Attorney Docket No.: 002027-5007 US
For: METHOD AND APPARATUS FOR TRANSMITTING AND RECEIVING SIGNAL IN RELAY STATION

: DECISION ON REQUEST TO
: PARTICIPATE IN THE PATENT
: PROSECUTION HIGHWAY
: PROGRAM AND PETITION
: TO MAKE SPECIAL UNDER
: 37 CFR 1.102(a)

This is a decision on the request to participate in the PCT Patent Prosecution Highway (PCT-PPH) pilot program and the petition under 37 CFR 1.102(a), filed on 24 June 2011 and renewed on 30 August 2011, to make the above-identified application special.

The request and petition are **GRANTED**.

Discussion

A grantable request to participate in the PCT-PPH pilot program and petition to make special require:

(1) The U.S. application must have an eligible relationship to one or more PCT applications where the ISA or IPEA are the JPO, EPO, KIPO, NPI, or USPTO;

(2) At least one claim in the PCT application has novelty, inventive step, and industrial applicability and must be free of any observations in Box VIII in the latest work product in the international stage or applicant must identify and explain why the claim(s) is/are not subject to the observation in Box VIII;

(3) Applicant must submit a copy of the claim(s) from the PCT application(s) that have novelty, inventive step, and industrial applicability along with an English translation thereof and a statement that the English translation is accurate, if the claims are not in the English language;

(4) All the claims in the U.S. application must sufficiently correspond or be amended to sufficiently correspond to the claim(s) that have novelty, inventive step, and industrial applicability in the PCT application(s);

(5) Examination of the U.S. application has not begun;

(6) Applicant must submit a copy of the latest international work product from the PCT application indicating that the claim(s) have novelty, inventive step, and industrial applicability along with an English translation thereof and a statement that the English translation is accurate if the latest international work product is not in the English language;

(7) Applicant must submit an IDS listing the documents cited by the PCT examiner in the international work product along with copies of documents except U.S. patents or U.S. patent application publications.

The request to participate in the PCT-PPH pilot program and petition comply with the above requirements. Accordingly, the above-identified application has been accorded "special" status.

Telephone inquiries concerning this decision should be directed to Lee W. Young at 571-272-4549.

All other inquiries concerning the examination or status of the application is accessible in the PAIR system at http://www.uspto.gov/ebc.index.html.

This application will be forwarded to the examiner for action on the merits commensurate with this decision once this application's formality reviews have been completed.

Lee W. Young
TQAS Technology Center 2600

UNITED STATES PATENT AND TRADEMARK OFFICE

Commissioner for Patents
United States Patent and Trademark Office
P.O. Box 1450
Alexandria, VA 22313-1450
www.uspto.gov

In re Application of
Lawrence J. Larsen

Application No. 12886759

Filed: September 21,2010

Attorney Docket No. ALARS.0101

:DECISION ON PETITION TO MAKE SPECIAL
:UNDER 37 CFR 1.102(c)(1)

This is a decision on the electronic petition under 37 CFR 1.102 (c)(1), filed 08-OCT-2010 to make the above-identified application special based on applicant's age as set forth in MPEP § 708.02, Section IV.

The petition is **GRANTED**.

A grantable petition to make an application special under 37 CFR 1.102(c)(1), MPEP § 708.02, Section IV: Applicant's Age must include a statement by applicant or a registered practitioner having evidence that applicant is at least 65 years of age. No fee is required.

Accordingly, the above-identified application has been accorded "special" status and will be taken up for action by the examiner upon the completion of all pre-examination processing.

Telephone inquiries concerning this electronic decision should be directed to the Electronic Business Center at 866-217-9197.

All other inquiries concerning either the examination or status of the application should be directed to the Technology Center.

UNITED STATES PATENT AND TRADEMARK OFFICE

Commissioner for Patents
United States Patent and Trademark Office
P.O. Box 1450
Alexandria, VA 22313-1450
www.uspto.gov

MORRISS OBRYANT COMPAGNI, P.C.
734 EAST 200 SOUTH
SALT LAKE CITY UT 84102

MAILED

AUG 01 2011

OFFICE OF PETITIONS

In re Application of
James Charles McCown
Application No. 12/886,781
Filed: September 21, 2010
Attorney Docket No. 3467.CMCC.CN

DECISION ON PETITION
TO WITHDRAW
FROM RECORD

This is a decision on the Request to Withdraw as attorney or agent of record under 37 C.F.R. § 1.36(b), filed July 6, 2011.

The request is **APPROVED**.

A grantable request to withdraw as attorney/agent of record must be signed by every attorney/agent seeking to withdraw or contain a clear indication that one attorney is signing on behalf of another/others. A request to withdraw will not be approved unless at least 30 (thirty) days would remain between the date of approval and the later of the expiration date of a time to file a response or the expiration date of the maximum time period which can be extended under 37 C.F.R. § 1.136(a).

The request was signed by Frank W. Compagni, on behalf of all attorneys/agents associated with customer number 26986. All attorneys/agents associated with customer number 26986 have been withdrawn.

The correspondence address has been changed and is copied below.

Telephone inquiries concerning this decision should be directed to Kimberly Inabinet at 571-272-4618.

/Kimberly Inabinet/

Kimberly Inabinet
Petitions Examiner
Office of Petitions

cc: James Charles McCown
2000 Sunset Road
Lake Point, UT 84074

UNITED STATES PATENT AND TRADEMARK OFFICE

UNITED STATES DEPARTMENT OF COMMERCE
United States Patent and Trademark Office
Address: COMMISSIONER FOR PATENTS
P.O. Box 1450
Alexandria, Virginia 22313-1450
www.uspto.gov

APPLICATION NUMBER	FILING OR 371(C) DATE	FIRST NAMED APPLICANT	ATTY. DOCKET NO./TITLE
12/886,781	09/21/2010	James Charles McCown	3467.CMCC.CN

CONFIRMATION NO. 1238

26986
MORRISS OBRYANT COMPAGNI, P.C.
734 EAST 200 SOUTH
SALT LAKE CITY, UT 84102

POWER OF ATTORNEY NOTICE

Date Mailed: 07/29/2011

NOTICE REGARDING CHANGE OF POWER OF ATTORNEY

This is in response to the Power of Attorney filed 07/06/2011.

- The withdrawal as attorney in this application has been accepted. Future correspondence will be mailed to the new address of record. 37 CFR 1.33.

/kainabinet/

Office of Data Management, Application Assistance Unit (571) 272-4000, or (571) 272-4200, or 1-888-786-0101

UNITED STATES PATENT AND TRADEMARK OFFICE

UNITED STATES DEPARTMENT OF COMMERCE
United States Patent and Trademark Office
Address: COMMISSIONER FOR PATENTS
P.O. Box 1450
Alexandria, Virginia 22313-1450
www.uspto.gov

APPLICATION NO.	FILING DATE	FIRST NAMED INVENTOR	ATTORNEY DOCKET NO.	CONFIRMATION NO.
12/886,793	09/21/2010	Eugene Feinberg	40007637-0001-452	1255

26263 7590 10/26/2010

SNR DENTON US LLP
P.O. BOX 061080
CHICAGO, IL 60606-1080

EXAMINER	
VIDWAN, JASJIT S	
ART UNIT	PAPER NUMBER
2182	
MAIL DATE	DELIVERY MODE
10/26/2010	PAPER

Please find below and/or attached an Office communication concerning this application or proceeding.

The time period for reply, if any, is set in the attached communication.

UNITED STATES PATENT AND TRADEMARK OFFICE

Commissioner for Patents
United States Patent and Trademark Office
P.O. Box 1450
Alexandria, VA 22313-1450
www.uspto.gov

SNR DENTON US LLP
P.O. BOX 061080
CHICAGO IL 60606-1080

In re Application of: FEINBERG et al.	:	
Serial No.: 12/886,793	:	DECISION ON PETITION TO
Filed: September 21, 2010	:	MAKE SPECIAL FOR NEW
Docket: 40007637-0001-452	:	APPLICATION UNDER 37
Title: CONTENT-AWARE DIGITAL MEDIA STORAGE DEVICE AND METHODS OF USING THE SAME	:	C.F.R. § 1.102 & M.P.E.P. § 708.02

This is a decision on the petition filed on September 21, 2010 to make the above-identified application special for accelerated examination procedure under 37 C.F.R. § 1.102(d).

The petition to make the application special is **GRANTED**.

The application is eligible for accelerated examination and the petition complies with the conditions for granting the application special status pursuant to the "Change to Practice for Petitions in Patent Applications to Make Special and for Accelerated Examination" published June 26, 2006, in the Federal Register. (71 Fed. Reg. 36323).

The prosecution of the instant application will be conducted expeditiously according to the following guidelines.

1. The application will be docketed to an examiner and taken up for action within two weeks of the date of this decision.

2. Restriction Practice:
   If the examiner determines that the claims are not directed to a single invention, a telephone request to elect one single invention will be made pursuant to MPEP 812.01. As a prerequisite to the grant of this petition, the applicant has agreed to make an oral election, by telephone, without traverse. If the applicant refuses to make an election without traverse, or the examiner cannot reach the applicant after a reasonable effort, the examiner will treat the first claimed invention (invention defined by claim 1) as having being constructively elected without traverse for examination.

3. Office action:

If it is determined that, after appropriate consultation, there is a potential rejection or any other issue to be addressed, the examiner will telephone the applicant and arrange an interview to discuss and resolve the issue. An Office action, other than a Notice of Allowance and Fee(s) Due (Notice of Allowance), will not be issued unless either: 1) an interview was conducted but did not result in agreed to action that places the application in condition for allowance, or, 2) a determination is made that an interview would be unlikely to result in the application being placed in condition for allowance, and 3) an internal conference has been held to review any rejection of any claim.

4. Time for Reply:
An Office action other than a Notice of Allowance or a final Office action will set a shortened statutory period of one month or thirty days, whichever is longer, for reply with no extension of time available under 37 CFR 1.136(a). Failure to timely file a reply within this non-extendible period for reply will result in the abandonment of the application.

5. Reply by Applicant:
A timely reply to an Office action other than the Notice of Allowance must be submitted electronically via EFS or EFS-web and limited to addressing the rejections, objections and requirement made. Any amendment that attempts to: 1) add claims which would result in more than three pending independent claims or more than twenty pending total claims; 2) present claims not encompassed by the pre-examination search or an updated accelerated examination support document; or 3) present claims that are directed a non-elected invention or an invention other than that previously claimed and examined in the application, will be treated as not fully responsive and will not be entered.

For any amendment to the claims (including any new claim) that is not encompassed by the accelerated examination support document, applicant must provide an updated accelerated examination support document that encompasses the amended or new claims at the time of filing of the amendment.

To proceed expeditiously with the examination, it is recommended that a reply with amendments made to any claim or with any new claim being added be accompanied by an updated accelerated examination support document or a statement explaining how the amended or new claim is supported by the original accelerated examination support document.

6. Information Disclosure Statement (IDS):
Any IDS filed during prosecution must be submitted electronically via EFS or EFS-web, accompanied by an updated accelerated examination support document, and be in compliance with 37 CFR 1.97 and 1.98.

7. Post-Allowance Processing:

To expedite processing of the allowed application into a patent, the applicant must: 1) pay the required fees within one month of the date of the Notice of Allowance, and 2) not file any post allowance papers not required by the Office. In no event may the issue fee be paid and accepted later than three months from the date of the Notice of Allowance.

8. After-Final and Appeal Procedures:
To expedite prosecution, after receiving the final Office action, applicant must: 1) promptly file a notice of appeal, an appeal brief and appeal fees; and 2) not request a pre-appeal brief conference.

Any amendment, affidavit or other evidence filed after final Office action must comply with applicable rules and the requirements outlined in numbered paragraphs 5 and 6 above.

On appeal, the application will proceed according to normal appeal procedures. After appeal, the application will again be treated special.

9. Proceedings Outside the Normal Examination Process:
If the application becomes involved in a proceeding that is outside the normal examination process (e.g., a secrecy order, national security review, interference proceeding, petitions under 37 CFR 1.181, 182 or 183), the application will be treated special before and after such proceeding.

10. Final Disposition:
The twelve-month goal of this accelerated examination procedure ends with a final disposition. The mailing of a final Office action, a Notice of Allowance, the filing of a Notice of Appeal, or the filing of a Request for Continued Examination (RCE) is the final disposition.

If, during prosecution, a paper is not filed electronically using EFS-web, a reply is filed but is not fully responsive, the application is involved in an appeal, or a proceeding outside normal examination process, the application will still be examined expeditiously, however, the final disposition may occur more than twelve months from the filing of the application.

Any inquiry regarding this decision should be directed to Mano Padmanabhan at (571) 272-4210. If attempts to reach the undersigned by telephone are unsuccessful, Kakali Chaki, Quality Assurance Specialist, can be reached at (571) 272-3719.

/Mano Padmanabhan/

Mano Padmanabhan,
Quality Assurance Specialist
Technology Center 2100
Computer Architecture, Software and Information Security

UNITED STATES PATENT AND TRADEMARK OFFICE

Commissioner for Patents
United States Patent and Trademark Office
P.O. Box 1450
Alexandria, VA 22313-1450
www.uspto.gov

MAILED

NOV 03 2011

OFFICE OF PETITIONS

JAMES ARNOLD, JR., ESQUIRE
W. L. GORE & ASSOCIATES, INC.
551 PAPER MILL ROAD
NEWARK, DE 19714-9206

Applicants: XU, et al.
Appl. No.: 12/886,817
Filing Date: September 21, 2010
Title: EXPANDABLE FUNCTIONAL TFE COPOLYMER FINE POWDER, THE EXPANDED FUNCTIONAL PRODUCTS OBTAINED THEREFROM AND REACTION OF THE EXPANDED PRODUCTS
Attorney Docket: GT/125B
Pub. No.: US 2011/0039960 A1
Pub. Date: February 17, 2011

This is a decision on the request for a corrected patent application publication under 37 CFR 1.221(b), received on April 7, 2011, for the above-identified application.

The request is granted

The corrected patent application publication will be published in due course, unless the patent issues before the application is republished.

Inquiries relating to this matter may be directed to Sherry D. Brinkley at (571) 272-3204.

/Christopher Bottorff/

Christopher Bottorff
Petitions Examiner
Office of Petitions

UNITED STATES PATENT AND TRADEMARK OFFICE

Commissioner for Patents
United States Patent and Trademark Office
P.O. Box 1450

MAILED

FEB 08 2012

OFFICE OF PETITIONS

WHITHAM, CURTIS & CHRISTOFFERSON & COOK, P.C.
11491 SUNSET HILLS ROAD
SUITE 340
RESTON VA 20190

In re Application of : DECISION ON REQUEST TO
Yusuke TAKANO et al. : PARTICIPATE IN PPH PROGRAM
Application No. 12/886,867 : AND PETITION TO MAKE SPECIAL
Filed: September 21, 2010 : UNDER 37 CFR 1.102(a)
Atty. Docket No.: 02100046BA :
For: COMMUNICATION NETWORK CONTROL SYSTEM, RADIO COMMUNICATION APPARATUS, AND COMMUNICATION NETWORK CONTROL METHOD

This is a decision on the request to participate in the Patent Prosecution Highway (PPH) program and the petition under 37 CFR 1.102(a), filed December 6, 2011 to make the above-identified application special.

The petition and request are **GRANTED**.

A grantable request to participate in the PPH (patent prosecution highway) program and petition to make special require:

(1) the U.S. application is a Paris Convention application which either validly claims priority under 35 U.S.C. 119(a) and 37 CFR 1.55 to one or more applications filed in the JPO (Japanese Patent Office) or claims priority to a PCT application that contains no priority claims. Alternatively, it can be a national stage application under the PCT which validly claims priority to an application filed in the JPO or claims priority to a PCT application that contains no priority claims. It can also be a "bypass application" filed under 35 U.S.C. 111(a) which validly claims benefit under 35 U.S.C. 120 to a PCT application, which PCT application validly claims priority to an application filed in the JPO or claims priority to a PCT application that contains no priority claims, or contains no priority claim;

(2) applicant must submit a copy of the allowable/patentable claim(s) from the JPO application(s) along with an English translation thereof and a statement that the English translation is accurate;

(3) all the claims in the U.S. application must sufficiently correspond or be amended to sufficiently correspond to the allowable/patentable claim(s) in the JPO application(s);

(4) examination of the U.S. application has not begun;

(5) applicant must submit a copy of all the office actions from each of the JPO application(s) containing the allowability/patentable claim(s) along with an English translation thereof and a statement that the English translation is accurate; and

(6) applicant must submit an IDS listing the documents cited by the JPO examiner in the JPO office action along with copies of documents except U.S. patents or U.S. patent application publications.

The request to participate in the PPH program and petition comply with the above requirements. Accordingly, the above-identified application has been accorded "special" status.

Telephone inquiries concerning this decision should be directed to Robert DeWitty, Petition Attorney, Office of Petitions at 571-272-8427.

All other inquiries concerning the examination or status of the application is accessible in the PAIR system at http://www.uspto.gov/ebc/index.html.

This application will be forwarded to Technology Center Art Unit 2617 for action commensurate with this decision.

David Bucci for R
Petitions Examiner
Office of Petitions

UNITED STATES PATENT AND TRADEMARK OFFICE

Commissioner for Patents
United States Patent and Trademark Office
P.O. Box 1450
Alexandria, VA 22313-1450
www.uspto.gov

MAILED

OCT 12 2010

OFFICE OF PETITIONS

K&L GATES LLP
210 SIXTH AVENUE
PITTSBURGH PA 15222-2613

In re Application of :
WHITTAKER, Richard E. :
Application No. 12/886,884 : DECISION ON PETITION
Effective Date: September 21, 2010 : TO MAKE SPECIAL UNDER
Attorney Docket No. **100523** : 37 CFR 1.102(c)(1)
:

This is a decision on the petition under 37 CFR 1.102(c)(1), filed September 21, 2010, to make the above-identified application special based on applicant's age as set forth in M.P.E.P. § 708.02, Section IV.

The petition is **GRANTED**.

A grantable petition to make an application special under 37 CFR 1.102(c)(1) and MPEP § 708.02, Section IV: Applicant's Age must be accompanied by evidence showing that at least one of the applicants is 65 years of age, or more, such as a birth certificate or a statement by applicant. No fee is required

The instant petition includes a statement by Richard Whittaker, attesting to his age. Accordingly, the above-identified application will be accorded "special" status.

Telephone inquiries concerning this decision should be directed to Tredelle Jackson at 571-272-2783.

All other inquiries concerning either the examination or status of the application should be directed to the Technology Center.

This application is being referred to the Office of Patent Application Processing. This application will be accorded "special" status when pre-examination processing is done.

/Tredelle D. Jackson/
Paralegal Specialist
Office of Petitions

UNITED STATES PATENT AND TRADEMARK OFFICE

Commissioner for Patents
United States Patent and Trademark Office
P.O. Box 1450
Alexandria, VA 22313-1450
www.uspto.gov

CURATOLO SIDOTI CO., LPA
24500 CENTER RIDGE ROAD, SUITE 280
CLEVELAND OH 44145

MAILED

JUL 01 2011

OFFICE OF PETITIONS

In re Application of :
Dolciato :
Application No. 12/886,915 : DECISION
Filed: 21 September, 2010 :
Attorney Docket No. RDO.P1400 :

This is a decision on the petition filed on 18 May, 2011, for revival of an application abandoned due to unintentional delay pursuant to 37 C.F.R. §1.137(b) .

The petition pursuant to 37 C.F.R. §1.137(b) is **GRANTED**.

As to the Allegations
of Unintentional Delay

The requirements of a grantable petition pursuant to 37 C.F.R. §1.137(b) are the petition and fee therefor, a reply, a proper statement and/or showing of unintentional delay under the regulation, and, where applicable, a terminal disclaimer and fee

Petitioners' attentions always are directed to the guidance in the Commentary at MPEP §711.03(c)(II).

BACKGROUND

Petitioner failed to reply timely and properly to the Notice to File Missing Parts (oath/declaration, surcharge) including therewith a Notice to File Corrected Application Papers (drawings requirement) mailed on 7 October, 2010, with reply due absent extension of time on or before 7 December, 2010.

The application went abandoned by operation of law after midnight 7 December, 2010,

It does not appear that the Office mailed the Notice of Abandonment before a petition was filed.

On 18 May, 2011, Petitioner filed, *inter alia*, a petition with fee, averring unintentional delay pursuant to 37 C.F.R. §1.137(b), with reply in the form of an oath/declaration, surcharge and drawings, and made the statement of unintentional delay.

Petitioners' attentions always are directed to the guidance in the Commentary at MPEP §711.03(c) as to the showing regarding unintentional delay and a petition pursuant to 37 C.F.R. §1.137(b).

The availability of applications and application papers online to applicants/practitioners who diligently associate their Customer Number with the respective application(s) now provides an applicant/practitioner on-demand information as to events/transactions in an application.

Out of an abundance of caution, Petitioners always are reminded that those registered to practice and all others who make representations before the Office **must** inquire into the underlying facts of representations made to the Office and support averments with the appropriate documentation–since all owe to the Office the continuing duty to disclose.[1]

STATUTES, REGULATIONS AND ANALYSIS

Congress has authorized the Commissioner to "revive an application if the delay is shown to the satisfaction of the Commissioner to have been "unavoidable." 35 U.S.C. §133 (1994).[2] The regulations at 37 C.F.R. §1.137(a) and (b) set forth the requirements for a Petitioner to revive a previously unavoidably or unintentionally, respectively, abandoned application under this congressional grant of authority.

Unintentional delays are those that do not satisfy the very strict statutory and regulatory requirements of unavoidable delay, and, by definition, are not intentional.[3]))

As to Allegations of Unintentional Delay

The requirements of a grantable petition pursuant to 37 C.F.R. §1.137(b) are the petition and fee therefor, a reply, a proper statement of unintentional delay under the regulation, and, where applicable, a terminal disclaimer and fee.

It appears that the requirements under the rule have been satisfied.

---

[1] See supplement of 17 June, 1999. The Patent and Trademark Office is relying on petitioner's duty of candor and good faith and accepting a statement made by Petitioner. See Changes to Patent Practice and Procedure, 62 Fed. Reg. at 53160 and 53178, 1203 Off. Gaz. Pat. Office at 88 and 103 (responses to comments 64 and 109)(applicant obligated under 37 C.F.R. §10.18 to inquire into the underlying facts and circumstances when providing statements to the Patent and Trademark Office).

[2] 35 U.S.C. §133 provides:

35 U.S.C. §133 Time for prosecuting application.

Upon failure of the applicant to prosecute the application within six months after any action therein, of which notice has been given or mailed to the applicant, or within such shorter time, not less than thirty days, as fixed by the Commissioner in such action, the application shall be regarded as abandoned by the parties thereto, unless it be shown to the satisfaction of the Commissioner that such delay was unavoidable.

[3] Therefore, by example, an unintentional delay in the reply might occur if the reply and transmittal form are to be prepared for shipment by the US Postal Service, but other pressing matters distract one's attention and the mail is not timely deposited for shipment.

CONCLUSION

Accordingly, the petition pursuant to 37 C.F.R. §1.137(b) is **granted**.

The instant application is released to the Office of Patent Application Processing (OPAP) for further processing in due course.

Petitioner may find it beneficial to view Private PAIR within a fortnight of the instant decision to ensure that the revival has been acknowledged by the OPAP in response to this decision. It is noted that all inquiries with regard to status need be directed to the OPAP where that change of status must be effected—that does not occur in the Office of Petitions.

Telephone inquiries regarding this decision may be directed to the undersigned at (571) 272-3214—it is noted, however, that all practice before the Office is in writing (see: 37 C.F.R. §1.2[4]) and the proper authority for action on any matter in this regard are the statutes (35 U.S.C.), regulations (37 C.F.R.) and the commentary on policy (MPEP). Therefore, no telephone discussion may be controlling or considered authority for Petitioner's action(s).

/John J. Gillon, Jr./
John J. Gillon, Jr.
Senior Attorney
Office of Petitions

---

[4] The regulations at 37 C.F.R. §1.2 provide:

§1.2 Business to be transacted in writing.

All business with the Patent and Trademark Office should be transacted in writing. The personal attdance of applicants or their attorneys or agents at the Patent and Trademark Office is unnecessary. The action of the Patent and Trademark Office will be based exclusively on the written record in the Office. No attention will be paid to any alleged oral promise, stipulation, or understanding in relation to which there is disagreement or doubt.

UNITED STATES PATENT AND TRADEMARK OFFICE

Commissioner for Patents
United States Patent and Trademark Office
P.O. Box 1450
Alexandria, VA 22313-1450
www.uspto.gov

SEP 30 2010

Stolowitz Ford Cowger LLP
621 SW Morrison Street
Suite 600
Portland, OR 97205

In re application of Kamyar et al. Application No. 12/886,922 Filed: September 21, 2010 For: CENTRALIZED MANAGEMENT OF MOTOR VEHICLE SOFTWARE APPLICATIONS AND SERVICES	:	DECISION ON PETITION TO MAKE SPECIAL FOR NEW APPLICATION UNDER 37 CFR 1.102

This is a decision on the petition filed on September 21, 2010 to make the above-identified application special for accelerated examination procedure under 37 C.F.R. § 1.102(d).

The petition to make the application special is **DENIED.**

REGULATION AND PRACTICE

A grantable petition to make special under 37 C.F.R. § 1.102(d) and pursuant to the "Change to Practice for Petitions in Patent Applications to Make Special and for Accelerated Examination" published in the Federal Register on June 26, 2006 (71 Fed. Reg. 36323), must satisfy the following conditions:

I. Conditions Regarding the Application:

1. the application must be a non-reissue utility or design application filed under 37 CFR 1.111(a);

2. the application, the petition and the required fees must be filed electronically using the USPTO's electronic filing system (EFS), or EFS-web; if not filed electronically, a statement asserting that EFS and EFS-web were not available during the normal business hours;

3. at the time of filing, the application must be complete under 37 CFR 1.51 and in condition for examination;

4. the application must contain three or fewer independent claims and twenty or fewer total claims and the claims must be directed to a single invention.

The Accelerated Examination Notice also sets forth:

> **Part I. Requirements for Petitions to Make Special under Accelerated Examination:** ***A new application may be granted accelerated examination status under the following conditions:***
>
> *Part VIII: More Information:*
>
> ...
>
> *Conditions for Examination:* The application must be in condition for examination at the time of filing. This means the application must include the following:
>
> ...
>
> (C) An executed oath or declaration in compliance with 37 CFR 1.63;
>
> ...
>
> The petition to make special will be dismissed if the application omits an item or includes a paper that causes the Office of Initial Patent Examination (OIPE) to mail a notice during the formality review (e.g. a notice of incomplete application, **a notice to file missing parts**, a notice to file corrected application papers, notice of omitted items, or notice of informal application). ***The opportunity to perfect a petition (Part II) does not apply to applications that are not in condition for examination at time of filing.*** (71 Fed. Reg. 36,323 at 36,327)

REVIEW OF FACTS

The petition fails to comply with conditions I.3, above.

Because the application was filed without a signed declaration, the application is considered to be incomplete and not in condition for examination as evidenced by the Notice to File Missing Parts of Nonprovisional Application mailed September 27, 2010. The opportunity to perfect the petition does not apply to applications that are not in condition for examination at time of filing.

Therefore, the petition fails to meet the required conditions to be accorded special status under the accelerated examination procedure. Given the above failure of filing a complete application the petition has not been further reviewed on the merits.

DECISION

For the above-stated reasons, the petition is **DENIED**. The application will therefore be taken up by the examiner for action in its regular turn. Further petitions for accelerated examination in this application will not be entertained.

Any inquiry regarding this decision should be directed to Teri P. Luu, Quality Assurance Specialist, at (571) 272-7045.

/Teri P. Luu/
Teri P. Luu
Quality Assurance Specialist
Technology Center 3600

tl: 09/27/10

UNITED STATES PATENT AND TRADEMARK OFFICE

Commissioner for Patents
United States Patent and Trademark Office
P.O. Box 1450
Alexandria, VA 22313-1450
www.uspto.gov

MCDERMOTT WILL & EMERY LLP
600 13TH STREET, N.W.
WASHINGTON DC 20005-3096

MAILED

FEB 23 2011

OFFICE OF PETITIONS

In re Application of :
Nanda Kumar et al. :
Application No. 12/886,938 : DECISION ACCORDING STATUS
Filed: September 21, 2010 : UNDER 37 CFR 1.47(a)
Attorney Docket No. **050108-0336** :

This is in response to the petition filed January 25, 2011 under 37 CFR 1.47(a).

The petition is **GRANTED**.

The above-identified application was filed without the signature of one of the joint inventors. Accordingly, on October 25, 2010, a "Notice To File Missing Parts of Application" was mailed, requiring *inter alia* a properly executed oath or declaration and the surcharge for late filing.

In response the instant petition under 37 CFR 1.47(a) was filed with a one month extension of time. The petition argues that joint inventor Ryan Paul Stewart-Gardiner has failed to sign the oath or declaration and thus by his actions, to cooperate with the filing of the instant application.

A grantable petition under 37 CFR 1.47(a) requires: (1) proof that the non-signing inventor cannot be reached or refuses to sign the oath or declaration after having been presented with the application papers (specification, claims and drawings); (2) an acceptable oath or declaration in compliance with 35 U.S.C. §§ 115 and 116; (3) the petition fee; and (4) a statement of the last known address of the non-signing inventor.

The petition bears proof that the application papers were sent via email to Mr. Stewart-Gardiner and that his reply to that email indicates his receipt of the application materials transmitted, however to date he has not returned an executed oath or declaration.

The above-identified application and papers have been reviewed and found in compliance with 37 CFR 1.47(a). In view thereof, this application is hereby accorded Rule 1.47(a) status.

Thus, as provided in Rule 1.47c, this Office will forward notice of this application's filing to the non-signing inventor at the address given in the petition. Notice of the filing of this application will also be published in the Official Gazette.

Petitioner is advised that the fee for a petition under 37 CFR 1.47 is set at $200 not $130 as indicated in the petition. As such, per the authorization included with the petition, deposit account no. 50-0417 has been charged in the amount of $200.

This matter will be referred to the Office of Patent Application Processing for continued pre-examination processing.

Telephone inquiries concerning this matter may be directed to the undersigned Petitions Attorney at (571) 272-3212.

Patricia Faison-Ball

Patricia Faison-Ball
Senior Petitions Attorney
Office of Petitions

UNITED STATES PATENT AND TRADEMARK OFFICE

Commissioner for Patents
United States Patent and Trademark Office
P.O. Box 1450
Alexandria, VA 22313-1450
www.uspto.gov

MAILED

OCT 13 2010

OFFICE OF PETITIONS

JACQUELINE E. HARTT, PH. D.
LOWNDES DROSDICK DOSTER KANTOR & REED, P.A.
P.O. BOX 2809
ORLANDO FL 32802-2809

In re Application of :
CHARLES, Beverley I. :
Application No. 12/886,977 : DECISION ON PETITION
Filed: September 21, 2010 : TO MAKE SPECIAL UNDER
Attorney Docket No. **147052** : 37 CFR 1.102(c)(1)
:

This is a decision on the petition under 37 CFR 1.102(c)(1), filed September 21, 2010, to make the above-identified application special based on applicant's age as set forth in M.P.E.P. § 708.02, Section IV.

The petition is **GRANTED**.

A grantable petition to make an application special under 37 CFR 1.102(c)(1) and MPEP § 708.02, Section IV: Applicant's Age must be accompanied by evidence showing that at least one of the applicants is 65 years of age, or more, such as a birth certificate or a statement by applicant. No fee is required

The instant petition includes a statement by Beverley Charles, attesting to his age. Accordingly, the above-identified application will be accorded "special" status.

Telephone inquiries concerning this decision should be directed to Tredelle Jackson at 571-272-2783.

All other inquiries concerning either the examination or status of the application should be directed to the Technology Center.

This application is being referred to the Office of Patent Application Processing. This application will be accorded "special" status when pre-examination processing is done.

/Tredelle D. Jackson/
Paralegal Specialist
Office of Petitions

UNITED STATES PATENT AND TRADEMARK OFFICE

Commissioner for Patents
United States Patent and Trademark Office
P.O. Box 1450
Alexandria, VA 22313-1450
www.uspto.gov

VAN DYKE, GARDNER, LINN & BURKHART, LLP
SUITE 207
2851 CHARLEVOIX DRIVE, S.E.
GRAND RAPIDS, MI 49546

MAILED

DEC 08 2011

OFFICE OF PETITIONS

In re Application of :
Clifford Lambarth, et al. :
Application No. 12/886,987 : DECISION ON PETITION
Filed: September 21, 2010 : UNDER 37 CFR 1.78(a)(3)
Attorney Docket No.: STR03E P-269B :

This is a decision on the petition under 37 CFR 1.78(a)(3), filed November 11, 2011, to accept an unintentionally delayed claim under 35 U.S.C. § 120 for the benefit of priority to the prior-filed nonprovisional applications set forth in the amendment filed with the petition.

The petition is not signed by a registered attorney or agent of record. However, in accordance with 37 CFR 1.34(a), the signature of Matthew L. Goska appearing on the petition shall constitute a representation to the United States Patent and Trademark Office that he is authorized to represent the particular party on whose behalf he acts. A courtesy copy of this decision is being mailed to petitioner. However, if Mr. Goska desires to receive future correspondence regarding this application, the appropriate power of attorney or authorization of agent must be submitted. All future correspondence regarding this application file will be directed solely to the address of record.

The petition is **DISMISSED**.

A petition for acceptance of a claim for late priority under 37 CFR 1.78(a)(3) is only applicable to those applications filed on or after November 29, 2000. Further, the petition is appropriate only after the expiration of the period specified in 37 CFR 1.78(a)(2)(ii). In addition, the petition under 37 CFR 1.78(a)(3) must be accompanied by:

(1) the reference required by 35 U.S.C. § 120 and 37 CFR 1.78(a)(2)(i) and (iii) of the prior-filed application, unless previously submitted;
(2) the surcharge set forth in § 1.17(t); and
(3) a statement that the entire delay between the date the claim was due under 37 CFR 1.78(a)(2)(ii) and the date the claim was filed was

unintentional. The Director may require additional information where there is a question whether the delay was unintentional.

The petition does not satisfy items (1) above.

In this regard, the reference to add the above-noted, prior-filed applications on page one following the first sentence of the specification is not acceptable as drafted since it improperly incorporates by reference the prior-filed application. An incorporation by reference statement added after an application's filing date is not effective because no new matter can be added to an application after its filing date (*see* 35 U.S.C. § 132(a)). If an incorporation by reference statement is included in an amendment to the specification to add a benefit claim under 35 U.S.C. § 120 after the filing date of the application, the amendment would not be proper. When a benefit claim under 35 U.S.C. § 120 is submitted after the filing of an application, the reference to the prior application cannot include an incorporation by reference statement of the prior application. *See* Dart Industries v. Banner, 636 F.2d 684, 207 USPQ 273 (C.A.D.C. 1980). *Note* MPEP §§ 201.06(c) and 608.04(b).

Before the petition under 37 CFR § 1.78(a)(3) can be granted, a renewed petition and either an Application Data Sheet or an amendment (complying with the provisions of 37 CFR 1.121 and 37 CFR 1.76(b)(5)) to correct the above matter is required.

Further correspondence with respect to this matter should be delivered through one of the following mediums:

By mail:	Mail Stop PETITIONS Commissioner for Patents Post Office Box 1450 Alexandria, VA 22313-1450
By hand:	Customer Service Window Mail Stop Petitions Randolph Building 401 Dulany Street Alexandria, VA 22314
By fax:	(571) 273-8300 ATTN: Office of Petitions
By Internet:	EFS-Web[1]

[1] www.uspto.gov/ebc/efs_help.html (for help using EFS-Web call the Patent Electronic Business Center at (866) 217-9197)

Telephone inquiries concerning this decision should be directed to Sherry Brinkley at (571) 272-3204.

/SDB/

Sherry D. Brinkley
Petitions Examiner
Office of Petitions

cc: MATTHEW GOSKA
WARNER NORCROSS & JUDD LLP
900 FIFTH THIRD CENTER
111 LYON STREET NW
GRAND RAPIDS, MI 49503-2487

Doc Code: PET.GREEN
Document Description: Petition for Green Tech Pilot

PTO/SB/420 (11-10)
Approved for use through 01/31/2011. OMB 0651-0062
U.S. Patent and Trademark Office; U. S. DEPARTMENT OF COMMERCE
Under the Paperwork Reduction Act of 1995, no persons are required to respond to a collection of information unless it displays a valid OMB control number.

PETITION TO MAKE SPECIAL UNDER THE GREEN TECHNOLOGY PILOT PROGRAM

Attorney Docket Number: 83150639	Application Number (if known): 12887117	Filing date: September 21, 2010
First Named Inventor: Ji Wu		
Title: PERMANENT MAGNET TEMPERATURE ESTIMATION		

APPLICANT HEREBY REQUESTS TO PARTICIPATE IN THE GREEN TECHNOLOGY PILOT PROGRAM FOR THE ABOVE-IDENTIFIED APPLICATION. See Instruction Sheet on page 2.

This petition must be timely filed electronically using the USPTO electronic filing system, EFS-Web.

1. By filing this petition:

   Applicant is requesting early publication: Applicant hereby requests early publication under 37 CFR 1.219 and the publication fee set forth in 37 CFR 1.18(d) accompanies this request.

2. By filing this petition: applicant is agreeing to make an election without traverse in a telephonic interview and elect an invention that meets the eligibility requirements for the Green Technology Pilot Program, if the Office determines that the claims are not obviously directed to a single invention. See Instruction Sheet.

3. This request is accompanied by statements of special status for the eligibility requirement.

4. The application contains no more than three (3) independent claims and twenty (20) total claims.

5. The application does not contain any multiple dependent claims.

6. Other attachments: _____

Signature /Jeremy J. Curcuri/	Date February 25, 2011
Name (Print/Typed) Jeremy J. Curcuri	Registration Number 42454

Note: *Signatures of all the inventors or assignees of record of the entire interest or their representative(s) are required in accordance with 37 CFR 1.33 and 11.18. Please see 37 CFR 1.4(d) for the form of the signature. If necessary, submit multiple forms for more than one signature see below*.*

☐ *Total of ..... forms are submitted.

The information is required to obtain or retain a benefit by the public which is to file (and by the USPTO to process) an application. Confidentiality is governed by 35 U.S.C. 122 and 37 CFR 1.11 and 1.14. This collection is estimated to take 12 hours to complete, including gathering, preparing, and submitting the completed application form to the USPTO. Time will vary depending upon the individual case. Any comments on the amount of time you require to complete this form and/or suggestions for reducing this burden, should be sent to the Chief Information Officer, U.S. Patent and Trademark Office, U.S. Department of Commerce, P.O. Box 1450, Alexandria, VA 22313-1450. DO NOT SEND FEES OR COMPLETED FORMS TO THIS ADDRESS. **SEND TO: Commissioner for Patents, P.O. Box 1450, Alexandria, VA 22313-1450.**

If you need assistance in completing the form, call 1-800-PTO-9199 and select option 2.

PTO/SB/420 (11-10)
Approved for use through 01/31/2011. OMB 0651-0062
U.S. Patent and Trademark Office; U. S. DEPARTMENT OF COMMERCE
Under the Paperwork Reduction Act of 1995, no persons are required to respond to a collection of information unless it displays a valid OMB control number.

Instruction Sheet for Petition to Make Special Under the Green Technology Pilot Program

(Not to be Submitted to the USPTO)

The following is a summary of the requirements (for more information see the notices (i) "Pilot Program for Green Technologies Including Greenhouse Gas Reduction," (ii) "Elimination of Classification Requirement in the Green Technology Pilot Program," and (iii) "Expansion and Extension of the Green Technology Pilot Program," available on the USPTO web site at http://www.uspto.gov/patents/init_events/green_tech.jsp):

1) The application must be a non-reissue, non-provisional utility application filed under 35 U.S.C. 111 (a), or an international application that has entered the national stage in compliance with 35 U.S.C. 371, irrespective of the filing date of the application. Reexamination proceedings are excluded from this pilot program.

2) The application must contain three or fewer independent claims and twenty or fewer total claims. The application must not contain any multiple dependent claims. For an application that contains more than three independent claims or twenty total claims, or multiple dependent claims, applicant must file a preliminary amendment in compliance with 37 CFR 1.121 to cancel the excess claims and/or the multiple dependent claims at the time the petition to make special is filed.

3) The claims must be directed to a single invention that materially enhances the quality of the environment, or that materially contributes to: (1) the discovery or development of renewable energy resources; (2) the more efficient utilization and conservation of energy resources; or (3) green house gas emission reduction (see the eligibility requirements of sections II and III of the notice (i) cited above). The petition must include a statement that, if the USPTO determines that the claims are directed to multiple inventions (e.g., in a restriction requirement), applicant will agree to make an election without traverse in a telephonic interview, and elect an invention that meets the eligibility requirements in section II or III of the notice (i) cited above.

4) The petition to make special must be timely filed electronically using the USPTO electronic filing system, EFS-Web, and selecting the document description of "Petition for Green Tech Pilot" on the EFS-Web screen. Applicant should use form PTO/SB/420, which is available as a Portable Document Format (PDF) fillable form in EFS-Web and on the USPTO Web site.

5) The petition to make special must be filed at least one day prior to the date that a first Office action (which may be an Office action containing only a restriction requirement) appears in the Patent Application Information Retrieval (PAIR) system. Applicant may check the status of the application using PAIR.

6) The petition to make special must be accompanied by a request for early publication in compliance with 37 CFR 1.219 and the publication fee set forth in 37 CFR 1.18(d).

Privacy Act Statement

The **Privacy Act of 1974 (P.L. 93-579)** requires that you be given certain information in connection with your submission of the attached form related to a patent application or patent. Accordingly, pursuant to the requirements of the Act, please be advised that: (1) the general authority for the collection of this information is 35 U.S.C. 2(b)(2); (2) furnishing of the information solicited is voluntary; and (3) the principal purpose for which the information is used by the U.S. Patent and Trademark Office is to process and/or examine your submission related to a patent application or patent. If you do not furnish the requested information, the U.S. Patent and Trademark Office may not be able to process and/or examine your submission, which may result in termination of proceedings or abandonment of the application or expiration of the patent.

The information provided by you in this form will be subject to the following routine uses:

1. The information on this form will be treated confidentially to the extent allowed under the Freedom of Information Act (5 U.S.C. 552) and the Privacy Act (5 U.S.C 552a). Records from this system of records may be disclosed to the Department of Justice to determine whether disclosure of these records is required by the Freedom of Information Act.
2. A record from this system of records may be disclosed, as a routine use, in the course of presenting evidence to a court, magistrate, or administrative tribunal, including disclosures to opposing counsel in the course of settlement negotiations.
3. A record in this system of records may be disclosed, as a routine use, to a Member of Congress submitting a request involving an individual, to whom the record pertains, when the individual has requested assistance from the Member with respect to the subject matter of the record.
4. A record in this system of records may be disclosed, as a routine use, to a contractor of the Agency having need for the information in order to perform a contract. Recipients of information shall be required to comply with the requirements of the Privacy Act of 1974, as amended, pursuant to 5 U.S.C. 552a(m).
5. A record related to an International Application filed under the Patent Cooperation Treaty in this system of records may be disclosed, as a routine use, to the International Bureau of the World Intellectual Property Organization, pursuant to the Patent Cooperation Treaty.
6. A record in this system of records may be disclosed, as a routine use, to another federal agency for purposes of National Security review (35 U.S.C. 181) and for review pursuant to the Atomic Energy Act (42 U.S.C. 218(c)).
7. A record from this system of records may be disclosed, as a routine use, to the Administrator, General Services, or his/her designee, during an inspection of records conducted by GSA as part of that agency's responsibility to recommend improvements in records management practices and programs, under authority of 44 U.S.C. 2904 and 2906. Such disclosure shall be made in accordance with the GSA regulations governing inspection of records for this purpose, and any other relevant (*i.e.*, GSA or Commerce) directive. Such disclosure shall not be used to make determinations about individuals.
8. A record from this system of records may be disclosed, as a routine use, to the public after either publication of the application pursuant to 35 U.S.C. 122(b) or issuance of a patent pursuant to 35 U.S.C. 151. Further, a record may be disclosed, subject to the limitations of 37 CFR 1.14, as a routine use, to the public if the record was filed in an application which became abandoned or in which the proceedings were terminated and which application is referenced by either a published application, an application open to public inspection or an issued patent.
9. A record from this system of records may be disclosed, as a routine use, to a Federal, State, or local law enforcement agency, if the USPTO becomes aware of a violation or potential violation of law or regulation.

IN THE UNITED STATES PATENT AND TRADEMARK OFFICE

In re application of:

JI WU

Group Art Unit: 2834

Examiner: Unknown

Serial No.: 12887117

Filed: September 21, 2010

For: PERMANENT MAGNET TEMPERATURE ESTIMATION

Attorney Docket No.: 83150639

STATEMENT SUPPORTING ELIGBILITY REQUIREMENT OF THE GREEN TECHNOLOGY PILOT PROGRAM

Commissioner for Patents
U.S. Patent and Trademark Office
P.O. Box 1450
Alexandria, VA 22313-1450

Dear Sir:

This Statement of Special Status for the Eligibility Requirement is being filed concurrently with a Petition To Make Special Under the Green Technology Pilot Program (PTO/SB/420), and pursuant to the requirements of 74 Fed. Reg. 64,666 (Dec. 8, 2009), as amended by 75 Fed. Reg. 28, 554 (May 21, 2010) and 75 Fed. Reg. 68049 (Nov. 10, 2010).

Applicant respectfully submits that the above-identified application is eligible for the "Green Technology Pilot Program" as materially contributing to the more efficient utilization and conservation of energy resources or the reduction of greenhouse gas emissions.

Applicant respectfully submits that it is clear on the above-identified application's face that the claimed invention materially contributes to the more efficient utilization and conservation of energy resources or the reduction of greenhouse gas emissions, hence no additional statement explaining how the materiality standard is met is being submitted at this time.

The Application is a non-reissue, non-provisional utility application filed under 35 U.S.C. §111(a). The Application contains no more than three (3) independent claims and twenty (20) total claims. The Application does not contain multiple dependent claims. A first Office action has not yet appeared in the Patent Application Information Retrieval System (PAIR).

The publication fee under 37 C.F.R. § 1.18(d) of $300 has been paid upon filing. Please charge any additional required fees to Deposit Account No. 06-1510 (Ford Global Technologies, LLC).

Respectfully submitted,

JI WU

By: /Jeremy J. Curcuri/
Jeremy J. Curcuri
Reg. No. 42.454
Attorney for Applicant

Date: February 25, 2011

BROOKS KUSHMAN P.C.
1000 Town Center, 22nd Floor
Southfield, MI 48075-1238
Phone: 248-358-4400
Fax: 248-358-3351

UNITED STATES PATENT AND TRADEMARK OFFICE

UNITED STATES DEPARTMENT OF COMMERCE
United States Patent and Trademark Office
Address: COMMISSIONER FOR PATENTS
P.O. Box 1450
Alexandria, Virginia 22313-1450
www.uspto.gov

APPLICATION NO.	FILING DATE	FIRST NAMED INVENTOR	ATTORNEY DOCKET NO.	CONFIRMATION NO.
12/887,117	09/21/2010	Ji Wu	83150639	1882

28395 7590 03/18/2011
BROOKS KUSHMAN P.C./FGTL
1000 TOWN CENTER
22ND FLOOR
SOUTHFIELD, MI 48075-1238

EXAMINER	
CAMBY, RICHARD M	

ART UNIT	PAPER NUMBER
3661	

MAIL DATE	DELIVERY MODE
03/18/2011	PAPER

Please find below and/or attached an Office communication concerning this application or proceeding.

The time period for reply, if any, is set in the attached communication.

UNITED STATES PATENT AND TRADEMARK OFFICE

Commissioner for Patents
United States Patent and Trademark Office
P.O. Box 1450
Alexandria, VA 22313-1450
www.uspto.gov

MAR 18 2011

BROOKS KUSHMAN P.C./FGTL
1000 TOWN CENTER
22ND FLOOR
SOUTHFIELD MI 48075-1238

In re Application of	:	
Ji WU et al.	:	DECISION ON PETITION
Application No. 12/887,117	:	TO MAKE SPECIAL UNDER
Filed: September 21, 2010	:	THE GREEN TECHNOLOGY
Attorney Docket No. 83150639	:	PILOT PROGRAM

This is a decision on the petition under 37 CFR 1.102, filed on February 25, 2011, to make the above-identified application special under the pilot program for applications pertaining to Green Technologies as set forth in 74 Federal Register Notice 64666 (December 8, 2009) and amended by 75 Federal Register Notice 28554 (May 21, 2010) and 75 Federal Register Notice 69049 (November 10, 2010).

The petition is **GRANTED**.

A grantable petition to make an application special under 37 CFR 1.102 and the pilot program as set forth in 74 FR 64666 must be directed to a nonprovisional application filed under 35 USC 111(a) or be a national stage entry under 35 USC 371, exclusive of any reissue applications.

In order to qualify for special status, the following requirements must be met. 1) The application must have no more than 3 independent claims and no more than 20 total claims. 2) The application must not contain any multiple dependent claims. 3) The petition must state the basis for seeking special status, i.e., the claimed invention either: A) materially enhances the quality of the environment or B) materially contributes to: i) the discovery or development of renewable energy resources, ii) the more efficient utilization and conservation of energy resources, or iii) greenhouse gas emission reduction. 4) If the disclosure is not clear on its face that the claimed invention materially contributes under category (A) or (B), the petition must be accompanied by a statement by the applicant, assignee, or an attorney/agent registered to practice before the Office explaining how the materiality standard is met. 5) A statement that applicant will agree to make an election without traverse in a telephonic interview if a restriction requirement is made by the examiner. 6) The petition to make special must be filed electronically. 7) The petition must be filed at least one day prior to the date that a first Office Action appears in the Patent Application Information Retrieval (PAIR) system. 8) The petition must be accompanied by a request for early publication in compliance with 37 CFR 1.219 and include the publication fee as set forth in 37 CFR 1.18(d).

The requirement for a fee for consideration of the petition to make special for applications pertaining to Green Technologies has been waived.

The instant petition complies with items 1 – 8 above. Accordingly, the above-identified application has been accorded "special" status.

Telephone inquires concerning this decision should be directed to Lanna Mai at 571-272-6867.

The application is being forwarded to the Technology Center Art Unit 3661 for action on the merits commensurate with this decision.

/Lanna Mai/

Lanna Mai
Quality Assurance Specialist
Technology Center 3600

UNITED STATES PATENT AND TRADEMARK OFFICE

Commissioner for Patents
United States Patent and Trademark Office
P.O. Box 1450

MAILED

MAY 20 2011

OFFICE OF PETITIONS

Oliff & Berridge, PLC
P.O. Box 320850
Alexandria, Virginia 22320-4850

In re Application of :
Cosimo BUFFONE et al. : ON PETITION
Application No. 12/887,120 :
Filed: 21 September 2010 :
Atty. Docket No.: 146711 :

This is in response to the petition under 37 CFR 1.47(a), filed 10 January 2011.

The petition is **GRANTED**.

A grantable petition under 37 CFR 1.47(a) requires:

(1) proof that the non-signing inventor cannot be reached or refuses to sign the oath or declaration after having been presented with the application papers (specification, claims, and drawings);
(2) an acceptable oath or declaration in compliance with 35 U.S.C. §§115 and 116;
(3) the petition fee; and
(4) a statement of the last known address of the non-signing inventor.

Petitioner has shown that the non-signing inventor Cosimo Buffone cannot be found after diligent effort. The application and papers have been received and found in compliance with 37 CFR 1.47(a). This application is hereby accorded Rule 47 status.

As provided in 37 CFR 1.47(c), this Office will forward notice of this application's filing to the non-signing inventor at the address given in that petition. Notice of the filing of this application will be published in the Official Gazette.

Telephone inquiries relating to this decision should be directed to Robert DeWitty, Petitions Examiner, Office of Petitions (571-272-8427).

The application file will be referred to Office of Patent Application Processing for further action on the filed Response.

/Anthony Knight/ for

David Bucci
Petitions Examiner
Office of Petitions

UNITED STATES PATENT AND TRADEMARK OFFICE

Commissioner for Patents
United States Patent and Trademark Office
P.O. Box 1450

Cosimo Buffone
Flat 2, Bronte Court
Waverley Street
Nottingham, NG74EG
UNITED KINGDOM

MAILED

MAY 20 2011

OFFICE OF PETITIONS

In re Application of :
Cosimo BUFFONE et al. : ON PETITION
Application No. 12/887,120 :
Filed: 21 September 2010 :
Atty. Docket No.: 146711 :

Dear Mr. Buffone:

You are named as joint inventor in the above-identified United States patent application, filed under the provisions of 35 USC 116 (United States Code), and 37 CFR 1.47(a), Rules of Practice in Patent Cases. Should a patent be granted on the application, you will be designated therein as a joint inventor.

As a named inventor you are entitled to inspect any paper in the file wrapper of the application, order copies of all or any part thereof (at a prepaid cost per 37 CFR 1.19) or make your position of record in the application. Alternatively, you may arrange to do any of the preceeding through a registered patent attorney or agent presenting written authorization from you. If you care to join the application, counsel of record (see below) would presumably assist you. Joining the application would entail the filing of an appropriate oath or declaration by you pursuant to 37 CFR 1.63.

Telephone inquiries regarding this communication should be directed to Robert DeWitty at (571) 272-8427. Requests for information regarding your application should be directed to the File Information Unit at (703) 308-2733. Information regarding how to pay for and order a copy of the application, or a specific paper in the application, should be directed to the Certification Division at (571) 272-3150 or 1 (800) 972-6382 (outside the Washington, DC area).

David Bucci
Petitions Examiner
Office of Petitions

cc: **Oliff & Berridge, PLC**
P.O. Box 320850
Alexandria, Virginia 22320-4850

Doc Code: PET.GREEN
Document Description: Petition for Green Tech Pilot

PTO/SB/420 (11-10)
Approved for use through 01/31/2011. OMB 0651-0062
U.S. Patent and Trademark Office; U. S. DEPARTMENT OF COMMERCE
Under the Paperwork Reduction Act of 1995, no persons are required to respond to a collection of information unless it displays a valid OMB control number.

PETITION TO MAKE SPECIAL UNDER THE GREEN TECHNOLOGY PILOT PROGRAM

Attorney Docket Number: 027364-007210US	Application Number (if known): 12/887,207	Filing date: September 21, 2010
First Named Inventor: Troy Anthony Trottier		
Title: Reflection Mode Wavelength Conversion Material for Optical Devices Using Non-Polar or Semipolar Gallium Containing Materials		

APPLICANT HEREBY REQUESTS TO PARTICIPATE IN THE GREEN TECHNOLOGY PILOT PROGRAM FOR THE ABOVE-IDENTIFIED APPLICATION. See Instruction Sheet on page 2.

This petition must be timely filed electronically using the USPTO electronic filing system, EFS-Web.

1. By filing this petition:

   Applicant is requesting early publication: Applicant hereby requests early publication under 37 CFR 1.219 and the publication fee set forth in 37 CFR 1.18(d) accompanies this request.

2. By filing this petition: applicant is agreeing to make an election without traverse in a telephonic interview and elect an invention that meets the eligibility requirements for the Green Technology Pilot Program, if the Office determines that the claims are not obviously directed to a single invention. See Instruction Sheet.

3. This request is accompanied by statements of special status for the eligibility requirement.

4. The application contains no more than three (3) independent claims and twenty (20) total claims.

5. The application does not contain any multiple dependent claims.

6. Other attachments: _____

Signature	Date February 9, 2011
Name (Print/Typed) Lu Yin	Registration Number 60,214

Note: *Signatures of all the inventors or assignees of record of the entire interest or their representative(s) are required in accordance with 37 CFR 1.33 and 11.18. Please see 37 CFR 1.4(d) for the form of the signature. If necessary, submit multiple forms for more than one signature see below*.*

[X] *Total of 1 forms are submitted.

The information is required to obtain or retain a benefit by the public which is to file (and by the USPTO to process) an application. Confidentiality is governed by 35 U.S.C. 122 and 37 CFR 1.11 and 1.14. This collection is estimated to take 12 hours to complete, including gathering, preparing, and submitting the completed application form to the USPTO. Time will vary depending upon the individual case. Any comments on the amount of time you require to complete this form and/or suggestions for reducing this burden, should be sent to the Chief Information Officer, U.S. Patent and Trademark Office, U.S. Department of Commerce, P.O. Box 1450, Alexandria, VA 22313-1450. DO NOT SEND FEES OR COMPLETED FORMS TO THIS ADDRESS. **SEND TO: Commissioner for Patents, P.O. Box 1450, Alexandria, VA 22313-1450.**

If you need assistance in completing the form, call 1-800-PTO-9199 and select option 2.

I hereby certify that this correspondence is being filed via EFS-Web with the United States Patent and Trademark Office on February 9, 2011.

KILPATRICK TOWNSEND & STOCKTON LLP

By: Yvonne Mock
Yvonne Mock

PATENT
Attorney Docket No.: 027364-007210US

IN THE UNITED STATES PATENT AND TRADEMARK OFFICE

In re application of:

Troy Anthony Trottier et al.

Application No.: 12/887,207

Filed: September 21, 2010

For: REFLECTION MODE WAVELENGTH CONVERSION MATERIAL FOR OPTICAL DEVICES USING NON-POLAR OR SEMIPOLAR GALLIUM CONTAINING MATERIALS

Customer No.: 20350

Confirmation No. 2045

Examiner: Unassigned

Technology Center/Art Unit: 2875

PETITION TO MAKE SPECIAL UNDER THE GREEN TECHNOLOGY PILOT PROGRAM

Commissioner for Patents
P.O. Box 1450
Alexandria, VA 22313-1450

Commissioner:

Applicants hereby request to participate in the Green Technology Pilot Program for the above-identified application.

Applicants request early publication under 37 CFR 1.219. The Commissioner is hereby authorized to charge Deposit Account No. 20-1430 for publication fee set forth in 37 CFR 1.18(d). in the amount of $300.

By filing this petition, Applicant is agreeing to make an election without traverse in a telephonic interview and elect an invention that meets the eligibility requirement and the classification requirement set forth in the Federal Register notice entitled "Pilot Program for

Green Technologies Including Greenhouse Gas Reduction" that was published in the Federal Register if the Office determines that the claims are not obviously directed to a single invention.

STATEMENT OF SPECIAL STATUS FOR THE ELIGIBILITY REQUIREMENT

The basis for the special status is that the invention claimed in the above-identified patent application materially contributes to the development of more efficient utilization and conservation of energy resources. The present invention is related to light-emitting diodes devices, which can be used for various types of lighting applications. Light-emitting diodes promise fundamentally higher efficiencies than traditional lighting technologies such as incandescent and mercury-based fluorescent lamps. Lighting accounts for about 20% of nationwide electricity use. Switching older lighting technologies to high efficiency LED lighting could reduce this electricity consumption in half. That is, an overall 10% reduction in nationwide electricity use. This is a savings of 1100 Terra-Watt-hours/year in energy consumption (or ~ $100B/year energy costs) and a 200M tons/year reduction in global carbon emissions annually. In addition, it could save 125 GW/year in electricity generation requirements ($50B construction cost or more). The present invention contributes directly to LED lighting, as the claimed invention is directed to gallium containing LED devices that utilize reflection mode wavelength material.

The application contains no more than three independent claims or twenty total claims.

The application does not contain any multiple dependent claims.

Respectfully submitted,

/Lu Yin/

Lu Yin
Reg. No. 60,214

KILPATRICK TOWNSEND & STOCKTON LLP
Two Embarcadero Center, Eighth Floor
San Francisco, California 94111-3834
Tel: 650-326-2400
Fax: 415-576-0300
L1Y/ylm

I hereby certify that this correspondence is being filed via EFS-Web with the United States Patent and Trademark Office on February 9, 2011.

KILPATRICK TOWNSEND & STOCKTON LLP

By: Yvonne Mock
Yvonne Mock

PATENT
Attorney Docket No.: 027364-007210US

IN THE UNITED STATES PATENT AND TRADEMARK OFFICE

In re application of:

Troy Anthony Trottier et al.

Application No.: 12/887,207

Filed: September 21, 2010

For: REFLECTION MODE WAVELENGTH CONVERSION MATERIAL FOR OPTICAL DEVICES USING NON-POLAR OR SEMIPOLAR GALLIUM CONTAINING MATERIALS

Customer No.: 20350

Confirmation No. 2045

Examiner: Unassigned

Technology Center/Art Unit: 2875

PETITION TO MAKE SPECIAL UNDER THE GREEN TECHNOLOGY PILOT PROGRAM

Commissioner for Patents
P.O. Box 1450
Alexandria, VA 22313-1450

Commissioner:

Applicants hereby request to participate in the Green Technology Pilot Program for the above-identified application.

Applicants request early publication under 37 CFR 1.219. The Commissioner is hereby authorized to charge Deposit Account No. 20-1430 for publication fee set forth in 37 CFR 1.18(d). in the amount of $300.

By filing this petition, Applicant is agreeing to make an election without traverse in a telephonic interview and elect an invention that meets the eligibility requirement and the classification requirement set forth in the Federal Register notice entitled "Pilot Program for

Green Technologies Including Greenhouse Gas Reduction" that was published in the Federal Register if the Office determines that the claims are not obviously directed to a single invention.

STATEMENT OF SPECIAL STATUS FOR THE ELIGIBILITY REQUIREMENT

The basis for the special status is that the invention claimed in the above-identified patent application materially contributes to the development of more efficient utilization and conservation of energy resources. The present invention is related to light-emitting diodes devices, which can be used for various types of lighting applications. Light-emitting diodes promise fundamentally higher efficiencies than traditional lighting technologies such as incandescent and mercury-based fluorescent lamps. Lighting accounts for about 20% of nationwide electricity use. Switching older lighting technologies to high efficiency LED lighting could reduce this electricity consumption in half. That is, an overall 10% reduction in nationwide electricity use. This is a savings of 1100 Terra-Watt-hours/year in energy consumption (or ~ $100B/year energy costs) and a 200M tons/year reduction in global carbon emissions annually. In addition, it could save 125 GW/year in electricity generation requirements ($50B construction cost or more). The present invention contributes directly to LED lighting, as the claimed invention is directed to gallium containing LED devices that utilize reflection mode wavelength material.

The application contains no more than three independent claims or twenty total claims.

The application does not contain any multiple dependent claims.

Respectfully submitted,

/Lu Yin/

Lu Yin
Reg. No. 60,214

KILPATRICK TOWNSEND & STOCKTON LLP
Two Embarcadero Center, Eighth Floor
San Francisco, California 94111-3834
Tel: 650-326-2400
Fax: 415-576-0300
L1Y/ylm

UNITED STATES PATENT AND TRADEMARK OFFICE

UNITED STATES DEPARTMENT OF COMMERCE
United States Patent and Trademark Office
Address: COMMISSIONER FOR PATENTS
P.O. Box 1450
Alexandria, Virginia 22313-1450
www.uspto.gov

APPLICATION NO.	FILING DATE	FIRST NAMED INVENTOR	ATTORNEY DOCKET NO.	CONFIRMATION NO.
12/887,207	09/21/2010	Troy Anthony Trottier	027364-007210US	2045

20350 7590 04/28/2011

KILPATRICK TOWNSEND & STOCKTON LLP
TWO EMBARCADERO CENTER
EIGHTH FLOOR
SAN FRANCISCO, CA 94111-3834

EXAMINER	
ART UNIT	PAPER NUMBER
2875	

NOTIFICATION DATE	DELIVERY MODE
04/28/2011	ELECTRONIC

Please find below and/or attached an Office communication concerning this application or proceeding.

The time period for reply, if any, is set in the attached communication.

Notice of the Office communication was sent electronically on above-indicated "Notification Date" to the following e-mail address(es):

Docket@kilpatricktownsend.com
ipefiling@kilpatricktownsend.com
jlhice@kilpatrick.foundationip.com

UNITED STATES PATENT AND TRADEMARK OFFICE

Commissioner for Patents
United States Patent and Trademark Office
P.O. Box 1450
Alexandria, VA 22313-1450
www.uspto.gov

KILPATRICK TOWNSEND & STOCKTON LLP
TWO EMBARCADERO CENTER
EIGHTH FLOOR
SAN FRANCISCO CA 94111-3834

In re Application of	:	
TROTTIER et al.	:	DECISION ON PETITION
Application No. 12/887,207	:	TO MAKE SPECIAL UNDER
Filed: September 21, 2010	:	THE GREEN TECHNOLOGY
Attorney Docket No. 027364-007210US	:	PILOT PROGRAM

This is a decision on the petition under 37 CFR 1.102, filed on February 09, 2011, to make the above-identified application special under the pilot program for applications pertaining to Green Technologies as set forth 74 Federal Register Notice 64666 (December 8, 2009) and amended by 75 Federal Register Notice 28554 (May 21, 2010) and 75 Federal Register Notice 69049 (November 10, 2010).

The petition is **GRANTED**.

A grantable petition to make an application special under 37 CFR 1.102 and the pilot program as set forth in 74 FR 64666 must be directed to a nonprovisional application filed under 35 USC 111(a) or be a national stage entry under 35 USC 371, exclusive of any reissue applications.

In order to qualify for special status, the following requirements must be met. 1) The application must have no more than 3 independent claims and no more than 20 total claims. 2) The application must not contain any multiple dependent claims. 3) The petition must state the basis for seeking special status, i.e., the claimed invention either: A) materially enhances the quality of the environment or B) materially contributes to: i) the discovery or development of renewable energy resources, ii) the more efficient utilization and conservation of energy resources, or iii) greenhouse gas emission reduction. 4) If the disclosure is not clear on its face that the claimed invention materially contributes under category (A) or (B), the petition must be accompanied by a statement by the applicant, assignee, or an attorney/agent registered to practice before the Office explaining how the materiality standard is met. 5) A statement that applicant will agree to make an election without traverse in a telephonic interview if a restriction requirement is made by the examiner. 6) The petition to make special must be filed electronically. 7) The petition must be filed at least one day prior to the date that a first Office Action appears in the Patent Application Information Retrieval (PAIR) system. 8) The petition must be accompanied by a request for early publication in compliance with 37 CFR 1.219 and include the publication fee as set forth in 37 CFR 1.18(d).

The requirement for a fee for consideration of the petition to make special for applications pertaining to Green Technologies has been waived.

The instant petition complies with items 1 – 8 above. Accordingly, the above-identified application has been accorded "special" status.

Telephone inquires concerning this decision should be directed to Lee W. Young at 571-272-4549.

The application is being forwarded to the Technology Center Art Unit 2875 for action on the merits commensurate with this decision.

Lee W. Young
Quality Assurance Specialist
Technology Center 2800

Doc Code: PET.AUTO **Document Description: Petition automatically granted by EFS-Web**	PTO/SB/83 U.S. Patent and Trademark Office Department of Commerce

Electronic Petition Request	**REQUEST FOR WITHDRAWAL AS ATTORNEY OR AGENT AND CHANGE OF CORRESPONDENCE ADDRESS**
Application Number	12887213
Filing Date	21-Sep-2010
First Named Inventor	Peter Conijn
Art Unit	1638
Examiner Name	EILEEN O HARA
Attorney Docket Number	1458-042
Title	LETTUCE CULTIVAR GANDHI

◉ Please withdraw me as attorney or agent for the above identified patent application and the practitioners of record associated with Customer Number: 32905

The reason(s) for this request are those described in 37 CFR:

10.40(b)(4)

Certifications

☒ I/We have given reasonable notice to the client, prior to the expiration of the response period, that the practitioner(s) intend to withdraw from employment

☒ I/We have delivered to the client or a duly authorized representative of the client all papers and property (including funds) to which the client is entitled

☒ I/We have notified the client of any responses that may be due and the time frame within which the client must respond

Change the correspondence address and direct all future correspondence to:
The address of the first named inventor or assignee that has properly made itself of record pursuant to 37 CFR 3.71, associated with Customer Number: 20872

I am authorized to sign on behalf of myself and all withdrawing practitioners.

Signature	/Robert J. Jondle/
Name	Robert J. Jondle
Registration Number	33915

UNITED STATES PATENT AND TRADEMARK OFFICE

Commissioner for Patents
United States Patent and Trademark Office
P.O. Box 1450
Alexandria, VA 22313-1450
www.uspto.gov

Decision Date : February 10, 2012

In re Application of :

Peter Conijn

Application No : 12887213

Filed : 21-Sep-2010

Attorney Docket No : 1458-042

DECISION ON REQUEST TO WITHDRAW AS ATTORNEY/AGENTOF RECORD

This is an electronic decision on the Request to Withdraw as attorney or agent of record under 37 CFR§ 1.36(b), filed February 10, 2012

The request is **APPROVED**

The request was signed by Robert J. Jondle (registration no. 33915) on behalf of all attorneys/agents associated with Customer Number 32905 . All attorneys/agents associated with Customer Number 32905 have been withdrawn.

Since there are no remaining attorneys of record, all future communications from the Office will be directed to the first named inventor or assignee that has properly made itself of record pursuant to 37 CFR 3.71, with Customer number 20872 .

As a reminder, requester is required to inform the first named inventor or assignee that has properly made itself of record pursuant to 37 CFR 3.71 of the electronically processed petition.

Telephone inquiries concerning this decision should be directed to the Patent Electronic Business Center (EBC) at 866-217-9197.

Office of Petitions

UNITED STATES PATENT AND TRADEMARK OFFICE

Commissioner for Patents
United States Patent and Trademark Office
P.O. Box 1450
Alexandria, VA 22313-1450
www.uspto.gov

In re Application of
Chandra Sekar

Application No. 12887278

Filed: September 21,2010

Attorney Docket No. 043829.012500

:DECISION ON PETITION TO MAKE SPECIAL
:UNDER 37 CFR 1.102(c)(1)

This is a decision on the electronic petition under 37 CFR 1.102 (c)(1), filed 12-JAN-2011 to make the above-identified application special based on applicant's age as set forth in MPEP § 708.02, Section IV.

The petition is **GRANTED**.

A grantable petition to make an application special under 37 CFR 1.102(c)(1), MPEP § 708.02, Section IV: Applicant's Age must include a statement by applicant or a registered practitioner having evidence that applicant is at least 65 years of age. No fee is required.

Accordingly, the above-identified application has been accorded "special" status and will be taken up for action by the examiner upon the completion of all pre-examination processing.

Telephone inquiries concerning this electronic decision should be directed to the Electronic Business Center at 866-217-9197.

All other inquiries concerning either the examination or status of the application should be directed to the Technology Center.

UNITED STATES PATENT AND TRADEMARK OFFICE

Commissioner for Patents
United States Patent and Trademark Office
P.O. Box 1450
Alexandria, VA 22313-1450
www.uspto.gov

BRENDA POMERANCE
LAW OFFICE OF BRENDA POMERANCE
310 West 52 Street
Suite 27B
NEW YORK NY 10019

MAILED

MAR 16 2012

OFFICE OF PETITIONS

In re Application of :
Newsome, et al. :
Application No. 12/887,343 : DECISION ON REQUEST
Filed: September 21, 2010 : UNDER 37 CFR § 5.25
Attorney Docket No. 1325-4002 :

Title: ADAPTIVE RENDERING FOR MOBILE MEDIA SHARING

This is a decision on the petition pursuant to 37 CFR § 5.25, filed October 24, 2011, seeking a retroactive license for foreign filing under 35 U.S.C. § 184.

The petition is **dismissed**.

37 CFR § 5.25 requires the following:

> (a)A petition for retroactive license under 35 U.S.C. 184 shall be presented in accordance with § 5.13 or § 5.14(a), and shall include:
> (1) A listing of each of the foreign countries in which the unlicensed patent application material was filed,
> (2) The dates on which the material was filed in each country,
> (3) A verified statement (oath or declaration) containing:
> (i) An averment that the subject matter in question was not under a secrecy order at the time it was filed abroad, and that it is not currently under a secrecy order,
> (ii) A showing that the license has been diligently sought after discovery of the proscribed foreign filing, and
> (iii) An explanation of why the material was filed abroad through error and without deceptive intent without the required license under § 5.11 first having been obtained, and
> (4) The required fee (§ 1.17(g) of this chapter).
>
> (b)The explanation in paragraph (a) of this section must include a showing of facts rather than a mere allegation of action through error and without deceptive intent. The showing of facts as to the nature of the error should include statements by those persons having personal knowledge of the acts regarding filing in a foreign country and should be accompanied by copies of any necessary supporting documents such as letters of transmittal or instructions for filing. The acts which are alleged to constitute error without deceptive intent should cover the period leading up to and including each of the proscribed foreign filings.

The petition is dismissed at this time since the requirements of 37 CFR 5.25(b) have not fully met.

In re Application No. 12/887,343

As to 37 CFR 5.25(a)(3)(iii), the verified statement that accompanied the petition lacks an explanation of why the material was filed abroad through error and without deceptive intent without the required license under § 5.11 first having been obtained. It is unclear from the petition as to the person who made the proscribed foreign filing. The explanation must be offered by a person(s) with first-hand knowledge of the circumstances under which the proscribed filing was made.

As to 37 CFR 5.25(b), the petition lacks a showing that the proscribed filing was made through error and without deceptive intent. The petition was not accompanied by copies of supporting documents, such as a letter of transmittal or instructions for filing relative to the proscribed filing.

Accordingly, the provisions of 37 CFR 5.25 have not been fully met. The petition is dismissed. On the absence of a response within 60 days of the mailing date of this decision, such dismissal will be made final and the final action under 35 U.S.C. 185 will be taken. Extensions of time may be obtained under 37 CFR 1.136.

Further correspondence with respect to this matter should be addressed as follows:

By mail: Commissioner for Patents
United States Patent and Trademark Office
Box 1450
Alexandria, VA 22313-1450

By facsimile: (571) 273-8300
Attn: Office of Petitions

Any inquiries related to this decision should be directed to Kenya A. McLaughlin, Petitions Attorney, at (571) 272-3222.

Ramesh Krishnamurthy
Petitions Examiner
Office of Petitions

UNITED STATES PATENT AND TRADEMARK OFFICE

Commissioner for Patents
United States Patent and Trademark Office
P.O. Box 1450
Alexandria, VA 22313-1450
www.uspto.gov

VENABLE LLP
P.O. BOX 34385
WASHINGTON, DC 20043-9998

MAILED
MAR 22 2012
OFFICE OF PETITIONS

In re Application of :
Jesse Caulfield :
Application No. 12/887,370 : DECISION ON PETITION
Filed: September 21, 2010 : TO WITHDRAW FROM
Attorney Docket No. 118849-291195 : RECORD

This is a decision on the Request to Withdraw as attorney or agent of record under 37 CFR §§ 1.36(b) or 37 CFR 10.40, filed February 22, 2012.

The request is **APPROVED**.

The request was signed by Michael A. Satori on behalf of himself and all the attorneys/agents associated with Customer Number 26694. Therefore, Michael A. Satori and all the attorneys/agents associated with Customer Number 26694 have been withdrawn.

Applicant is reminded that there are no attorneys/agents of record at this time.

All future communications from the Office will be directed to the address listed below until otherwise properly notified by the applicant.

Telephone inquiries concerning this decision should be directed to the undersigned at (571) 272-3226.

/Andrea Smith/
Andrea Smith
Petitions Examiner
Office of Petitions

cc: Key Bridge Global LLC
1600 Tysons Blvd., Suite 1100
McLean, VA 22102

UNITED STATES PATENT AND TRADEMARK OFFICE

UNITED STATES DEPARTMENT OF COMMERCE
United States Patent and Trademark Office
Address: COMMISSIONER FOR PATENTS
P.O. Box 1450
Alexandria, Virginia 22313-1450
www.uspto.gov

APPLICATION NUMBER	FILING OR 371(C) DATE	FIRST NAMED APPLICANT	ATTY. DOCKET NO./TITLE
12/887,370	09/21/2010	Jesse Caulfield	118849-291195

CONFIRMATION NO. 2378

26694
VENABLE LLP
P.O. BOX 34385
WASHINGTON, DC 20043-9998

POWER OF ATTORNEY NOTICE

OC000000053209602

Date Mailed: 03/19/2012

NOTICE REGARDING CHANGE OF POWER OF ATTORNEY

This is in response to the Power of Attorney filed 02/22/2012.

- The withdrawal as attorney in this application has been accepted. Future correspondence will be mailed to the new address of record. 37 CFR 1.33.

/amsmith/

Office of Data Management, Application Assistance Unit (571) 272-4000, or (571) 272-4200, or 1-888-786-0101

Doc Code: PPH.PCT.652
Document Description: Petition to make special under PCT-Patent Pros Hwy

PTO/SB/20PCT-KR (06-10)
Approved for use through 01/31/2012. OMB 0651-0058
U.S. Patent and Trademark Office; U. S. DEPARTMENT OF COMMERCE
Under the Paperwork Reduction Act of 1995, no persons are required to respond to a collection of information unless it displays a valid OMB control number.

REQUEST FOR PARTICIPATION IN THE PATENT COOPERATION TREATY - PATENT PROSECUTION HIGHWAY (PCT-PPH) PILOT PROGRAM BETWEEN THE KOREAN INTELLECTUAL PROPERTY OFFICE (KIPO) AND THE USPTO

Application No:	12/887,375	Filing date:	21 September 2010
First Named Inventor:	Jean-Marc LOPEZ		
Title of the Invention:	SELECTIVE CONTROL OF FLOW THROUGH A WELL SCREEN		

THIS REQUEST FOR PARTICIPATION IN THE PCT-PPH PILOT PROGRAM ALONG WITH THE REQUIRED DOCUMENTS MUST BE SUBMITTED VIA EFS-WEB. INFORMATION REGARDING EFS-WEB IS AVAILABLE AT HTTP://WWW.USPTO.GOV/EBC/EFS_HELP.HTML

APPLICANT HEREBY REQUESTS PARTICIPATION IN THE PCT-PPH PROGRAM AND PETITIONS TO MAKE THE ABOVE-IDENTIFIED APPLICATION SPECIAL UNDER THE PCT-PPH PROGRAM.

The above-identified application is (1) a national stage entry of the corresponding PCT application, or (2) a national stage entry of another PCT application which claims priority to the corresponding PCT application, or (3) a national application that claims domestic/ foreign priority to the corresponding PCT application, or (4) a national application which forms the basis for the priority claim in the corresponding PCT application, or (5) a continuing application of a U.S. application that satisfies one of (1) to (4) above, or (6) a U.S. application that claims domestic benefit to a U.S. provisional application which forms the basis for the priority claim in the corresponding PCT application.

The corresponding PCT application number(s) is/are: PCT/US11/50750

The international filing date of the corresponding PCT application(s) is/are: 08 September 2011

I. List of Required Documents:

a. **A copy of the latest international work product (WO/ISA, WO/IPEA, or IPER) in the above–identified corresponding PCT application(s)**

☑ Is attached.

☐ Is not attached because the document is already in the U.S. application.

b. **A copy of all claims which were indicated as having novelty, inventive step and industrial applicability in the above-identified corresponding PCT application(s).**

☑ Is attached.

☐ Is not attached because the document is already in the U.S. application.

c. **English translations of the documents in a. and b. above are attached (if the documents are not in the English language). A statement that the English translation is accurate is attached for the document in b. above.**

This collection of information is required by 35 U.S.C. 119, 37 CFR 1.55, and 37 CFR 1.102(d). The information is required to obtain or retain a benefit by the public, which is to file (and by the USPTO to process) an application. Confidentiality is governed by 35 U.S.C. 122 and 37 CFR 1.11 and 1.14. This collection is estimated to take 2 hours to complete, including gathering, preparing, and submitting the completed application form to the USPTO. Time will vary depending upon the individual case. Any comments on the amount of time you require to complete this form and/or suggestions for reducing this burden should be sent to the Chief Information Officer, U.S. Patent and Trademark Office, U.S. Department of Commerce, P.O. Box 1450, Alexandria, VA 22313-1450. DO NOT SEND FEES OR COMPLETED FORMS TO THIS ADDRESS.

PTO/SB/20PCT-KR (06-10)
Approved for use through 01/31/2012. OMB 0651-0058
U.S.Patent and Trademark Office; U.S. DEPARTMENT OF COMMERCE
Under the Paperwork Reduction Act of 1995, no persons are required to respond to a collection of information unless it displays a valid OMB control number.

REQUEST FOR PARTICIPATION IN THE PCT-PPH PILOT PROGRAM BETWEEN THE KIPO AND THE USPTO

(continued)

Application No.:	12/887,375
First Named Inventor:	Jean-Marc LOPEZ

d. **(1) An information disclosure statement listing the documents cited in the international work products (ISR, WO/ISA, WO/IPEA, IPER) of the corresponding PCT application.**

☐ Is attached

☑ Has already been filed in the above-identified U.S. application on 16 March 2012

(2) Copies of all documents (except) for U.S. patents or U.S. patent application publications)

☐ Are attached.

☑ Have already been filed in the above-identified U.S. application on 16 March 2012

II. Claims Correspondence Table:

Claims in US Application	Patentable Claims in the corresponding PCT Application	Explanation regarding the correspondence
2	2	IDENTICAL - rewritten in independent form
3	3	IDENTICAL - rewritten in independent form
4	4	IDENTICAL - rewritten in independent form
5	5	IDENTICAL - rewritten in independent form
6	6	IDENTICAL - rewritten in independent form
7	7	IDENTICAL - rewritten in independent form
8	8	IDENTICAL - rewritten in independent form
9	9	IDENTICAL
10	10	IDENTICAL
11	11	IDENTICAL
12	12	IDENTICAL
13	13	IDENTICAL
14	14	IDENTICAL
15	15	IDENTICAL
16	16	IDENTICAL
17	17	IDENTICAL
18	18	IDENTICAL
19	19	IDENTICAL
20	20	IDENTICAL

III. All the claims in the US application sufficiently correspond to the patentable claims in the corresponding PCT application.

Signature /Marlin R. Smith/	Date 02 April 2012
Name (Print/Typed) Marlin R. Smith	Registration Number 38310

Privacy Act Statement

The **Privacy Act of 1974 (P.L. 93-579)** requires that you be given certain information in connection with your submission of the attached form related to a patent application or patent. Accordingly, pursuant to the requirements of the Act, please be advised that: (1) the general authority for the collection of this information is 35 U.S.C. 2(b)(2); (2) furnishing of the information solicited is voluntary; and (3) the principal purpose for which the information is used by the U.S. Patent and Trademark Office is to process and/or examine your submission related to a patent application or patent. If you do not furnish the requested information, the U.S. Patent and Trademark Office may not be able to process and/or examine your submission, which may result in termination of proceedings or abandonment of the application or expiration of the patent.

The information provided by you in this form will be subject to the following routine uses:

1. The information on this form will be treated confidentially to the extent allowed under the Freedom of Information Act (5 U.S.C. 552) and the Privacy Act (5 U.S.C 552a). Records from this system of records may be disclosed to the Department of Justice to determine whether disclosure of these records is required by the Freedom of Information Act.
2. A record from this system of records may be disclosed, as a routine use, in the course of presenting evidence to a court, magistrate, or administrative tribunal, including disclosures to opposing counsel in the course of settlement negotiations.
3. A record in this system of records may be disclosed, as a routine use, to a Member of Congress submitting a request involving an individual, to whom the record pertains, when the individual has requested assistance from the Member with respect to the subject matter of the record.
4. A record in this system of records may be disclosed, as a routine use, to a contractor of the Agency having need for the information in order to perform a contract. Recipients of information shall be required to comply with the requirements of the Privacy Act of 1974, as amended, pursuant to 5 U.S.C. 552a(m).
5. A record related to an International Application filed under the Patent Cooperation Treaty in this system of records may be disclosed, as a routine use, to the International Bureau of the World Intellectual Property Organization, pursuant to the Patent Cooperation Treaty.
6. A record in this system of records may be disclosed, as a routine use, to another federal agency for purposes of National Security review (35 U.S.C. 181) and for review pursuant to the Atomic Energy Act (42 U.S.C. 218(c)).
7. A record from this system of records may be disclosed, as a routine use, to the Administrator, General Services, or his/her designee, during an inspection of records conducted by GSA as part of that agency's responsibility to recommend improvements in records management practices and programs, under authority of 44 U.S.C. 2904 and 2906. Such disclosure shall be made in accordance with the GSA regulations governing inspection of records for this purpose, and any other relevant (*i.e.*, GSA or Commerce) directive. Such disclosure shall not be used to make determinations about individuals.
8. A record from this system of records may be disclosed, as a routine use, to the public after either publication of the application pursuant to 35 U.S.C. 122(b) or issuance of a patent pursuant to 35 U.S.C. 151. Further, a record may be disclosed, subject to the limitations of 37 CFR 1.14, as a routine use, to the public if the record was filed in an application which became abandoned or in which the proceedings were terminated and which application is referenced by either a published application, an application open to public inspection or an issued patent.
9. A record from this system of records may be disclosed, as a routine use, to a Federal, State, or local law enforcement agency, if the USPTO becomes aware of a violation or potential violation of law or regulation.

PCT CLAIMS

2. The method of claim 1, wherein exposing the well screen to the aqueous fluid further comprises contacting an acid containing structure with the aqueous fluid.

3. The method of claim 1, wherein exposing the well screen to the aqueous fluid further comprises dissolving at least a portion of an acid containing structure.

4. The method of claim 1, wherein exposing the well screen to the aqueous fluid further comprises releasing an acid from a structure containing the acid.

5. The method of claim 1, wherein exposing the well screen to the aqueous fluid further comprises contacting a polylactic acid structure with the aqueous fluid.

6. The method of claim 1, wherein exposing the well screen to the aqueous fluid further comprises dissolving a polylactic acid structure.

7. The method of claim 1, wherein exposing the well screen to the aqueous fluid further comprises dissolving at least one plug which blocks flow through the well screen.

8. The method of claim 1, wherein installing the well screen in the wellbore further comprises installing an

acid containing structure in the wellbore with the well screen.

9. The method of claim 8, wherein the acid containing structure is at least partially dissolvable in response to contact with the aqueous fluid.

10. The method of claim 8, wherein installing the acid containing structure in the wellbore further comprises positioning the acid containing structure within an interior longitudinal flow passage of the well screen.

11. The method of claim 8, wherein installing the acid containing structure in the wellbore further comprises positioning the acid containing structure external to a base pipe of the well screen.

12. The method of claim 8, wherein installing the acid containing structure in the wellbore further comprises positioning the acid containing structure proximate at least one plug which blocks flow through the well screen.

13. A well screen assembly for use in a subterranean well, the well screen assembly comprising:

a well screen; and

an acid containing structure which dissolves in response to contact with an aqueous fluid, whereby flow through the well screen is selectively permitted.

14. The well screen assembly of claim 13, wherein the acid containing structure comprises polylactic acid.

15. The well screen assembly of claim 14, wherein the polylactic acid forms a container which contains another acid.

16. The well screen assembly of claim 13, wherein at least one plug prevents flow through the well screen, and wherein the plug dissolves in response to contact with acid released from the acid containing structure.

17. The well screen assembly of claim 13, wherein the acid containing structure is positioned within an interior longitudinal flow passage of the well screen.

18. The well screen assembly of claim 13, wherein the acid containing structure is positioned external to a base pipe of the well screen.

19. The well screen assembly of claim 13, wherein the acid containing structure is positioned proximate at least one plug which blocks flow through the well screen.

20. The well screen assembly of claim 13, wherein the acid containing structure is attached to a base pipe of the well screen.

UNITED STATES PATENT AND TRADEMARK OFFICE

Commissioner for Patents
United States Patent and Trademark Office
P.O. Box 1450
Alexandria, VA 22313-1450
www.uspto.gov

MAILED

OCT 19 2010

OFFICE OF PETITIONS

LAWSON & PERSSON, P.C.
P.O. BOX 712
LANCONIA NH 03247-0712

In re Application of :
DEANS, David M. :
Application No. 12/887,378 : DECISION ON PETITION
Filed: September 21, 2010 : TO MAKE SPECIAL UNDER
Attorney Docket No. **RC 10.01** : 37 CFR 1.102(c)(1)
:

This is a decision on the petition under 37 CFR 1.102(c)(1), filed September 21, 2010, to make the above-identified application special based on applicant's age as set forth in M.P.E.P. § 708.02, Section IV.

The petition is **GRANTED**.

A grantable petition to make an application special under 37 CFR 1.102(c)(1) and MPEP § 708.02, Section IV: Applicant's Age must be accompanied by evidence showing that at least one of the applicants is 65 years of age, or more, such as a birth certificate or a statement by applicant. No fee is required

The instant petition includes a declaration of inventor David Deans, attesting to his age. Accordingly, the above-identified application will be accorded "special" status.

Telephone inquiries concerning this decision should be directed to Tredelle Jackson at 571-272-2783.

All other inquiries concerning either the examination or status of the application should be directed to the Office of Patent Application Processing.

This application is being referred to the Office of Patent Application Processing for processing. This application will be accorded "special" status when pre-examination processing is done.

/Tredelle D. Jackson/
Paralegal Specialist
Office of Petitions

UNITED STATES PATENT AND TRADEMARK OFFICE

Commissioner for Patents
United States Patent and Trademark Office
P.O. Box 1450
Alexandria, VA 22313-1450
www.uspto.gov

In re Application of
Wendell B. Sander

Application No. 12887468

Filed: September 21,2010

Attorney Docket No. P8980US1

:
:
:DECISION ON PETITION TO MAKE SPECIAL
:UNDER 37 CFR 1.102(c)(1)
:

This is a decision on the electronic petition under 37 CFR 1.102 (c)(1), filed 19-APR-2011 to make the above-identified application special based on applicant's age as set forth in MPEP § 708.02, Section IV.

The petition is **GRANTED**.

A grantable petition to make an application special under 37 CFR 1.102(c)(1), MPEP § 708.02, Section IV: Applicant's Age must include a statement by applicant or a registered practitioner having evidence that applicant is at least 65 years of age. No fee is required.

Accordingly, the above-identified application has been accorded "special" status and will be taken up for action by the examiner upon the completion of all pre-examination processing.

Telephone inquiries concerning this electronic decision should be directed to the Electronic Business Center at 866-217-9197.

All other inquiries concerning either the examination or status of the application should be directed to the Technology Center.

Doc code : PET.OP.AGE
Description : Petition to make special based on Age/Health

PTO/SB/130 (07-09)
Approved for use through 07/31/2012. OMB 0651- 0031
U.S. Patent and Trademark Office; U.S. DEPARTMENT OF COMMERCE
Under the Paperwork Reduction Act of 1995, no persons are required to respond to a collection of information unless it contains a valid OMB control number

PETITION TO MAKE SPECIAL BASED ON AGE FOR ADVANCEMENT OF EXAMINATION UNDER 37 CFR 1.102(c)(1)

Application Information

Application Number	12887468	Confirmation Number	2564	Filing Date	2010-09-21
Attorney Docket Number (optional)	P8980US1	Art Unit	2183	Examiner	
First Named Inventor	Wendell B Sander				
Title of Invention	DIGITAL COMMUNICATIONS SYSTEM WITH VARIABLE-BANDWIDTH TRAFFIC CHANNELS				

Attention: Office of Petitions
An application may be made special for advancement of examination upon filing of a petition showing that the applicant is 65 years of age, or more. No fee is required with such a petition. See 37 CFR 1.102(c)(1) and MPEP 708.02 (IV).

APPLICANT HEREBY PETITIONS TO MAKE SPECIAL FOR ADVANCEMENT OF EXAMINATION IN THIS APPLICATION UNDER 37 CFR 1.102(c)(1) and MPEP 708.02 (IV) ON THE BASIS OF THE APPLICANT'S AGE.

A grantable petition requires one of the following items:
(1) Statement by one named inventor in the application that he/she is 65 years of age, or more; or
(2) Certification by a registered attorney/agent having evidence such as a birth certificate, passport, driver's license, etc. showing one named inventor in the application is 65 years of age, or more.

Name of Inventor who is 65 years of age, or older

Given Name	Middle Name	Family Name	Suffix
Wendell	B	Sander	

A signature of the applicant or representative is required in accordance with 37 CFR 1.33 and 10.18.
Please see 37 CFR 1.4(d) for the format of the signature.

Select (1) or (2) :

○ (1) I am an inventor in this application and I am 65 years of age, or more.

◉ (2) I am an attorney or agent registered to practice before the Patent and Trademark Office, and I certify that I am in possession of evidence, and will retain such in the application file record, showing that the inventor listed above is 65 years of age, or more.

Signature	/David C. Kellogg/	Date (YYYY-MM-DD)	2011-04-19
Name	David C. Kellogg	Registration Number	62958

PTO/SB/130 (07-09)
Approved for use through 07/31/2012. OMB 0651- 0031
U.S. Patent and Trademark Office; U.S. DEPARTMENT OF COMMERCE
Under the Paperwork Reduction Act of 1995, no persons are required to respond to a collection of information unless it contains a valid OMB control number

Privacy Act Statement

The Privacy Act of 1974 (P.L. 93-579) requires that you be given certain information in connection with your submission of the attached form related to a patent application or patent. Accordingly, pursuant to the requirements of the Act, please be advised that: (1) the general authority for the collection of this information is 35 U.S.C. 2(b)(2); (2) furnishing of the information solicited is voluntary; and (3) the principal purpose for which the information is used by the U.S. Patent and Trademark Office is to process and/or examine your submission related to a patent application or patent. If you do not furnish the requested information, the U.S. Patent and Trademark Office may not be able to process and/or examine your submission, which may result in termination of proceedings or abandonment of the application or expiration of the patent.

The information provided by you in this form will be subject to the following routine uses:

1. The information on this form will be treated confidentially to the extent allowed under the Freedom of Information Act (5 U.S.C. 552) and the Privacy Act (5 U.S.C. 552a). Records from this system of records may be disclosed to the Department of Justice to determine whether the Fr eedom of Information Act requires disclosure of these records.

2. A record from this system of records may be disclosed, as a routine use, in the course of presenting evidence to a court, magistrate, or administrative tribunal, including disclosures to opposing counsel in the course of settlement negotiations.

3. A record in this system of records may be disclosed, as a routine use, to a Member of Congress submitting a request involving an individual, to whom the record pertains, when the individual has requested assistance from the Member with respect to the subject matter of the record.

4. A record in this system of records may be disclosed, as a routine use, to a contractor of the Agency having need for the information in order to perform a contract. Recipients of information shall be required to comply with the requirements of the Privacy Act of 1974, as amended, pursuant to 5 U.S.C. 552a(m).

5. A record related to an International Application filed under the Patent Cooperation Treaty in this system of records may be disclosed, as a routine use, to the International Bureau of the World Intellectual Property Organization, pursuant to the Patent Cooperation Treaty.

6. A record in this system of records may be disclosed, as a routine use, to another federal agency for purposes of National Security review (35 U.S.C. 181) and for review pursuant to the Atomic Energy Act (42 U.S.C. 218(c)).

7. A record from this system of records may be disclosed, as a routine use, to the Administrator, General Services, or his/her designee, during an inspection of records conducted by GSA as part of that agency's responsibility to recommend improvements in records management practices and programs, under authority of 44 U.S.C. 2904 and 2906. Such disclosure shall be made in accordance with the GSA regulations governing inspection of records for this purpose, and any other relevant (i.e., GSA or Commerce) directive. Such disclosure shall not be used to make determinations about indivi duals.

8. A record from this system of records may be disclosed, as a routine use, to the public after either publication of the application pursuant to 35 U.S.C. 122(b) or issuance of a patent pursuant to 35 U.S.C. 151. Further, a record may be disclosed, subject to the limitations of 37 CFR 1.14, as a routine use, to the public if the record was filed in an application which became abandoned or in which the proceedings were terminated and which application is referenced by either a published application, an application open to public inspections or an issued patent.

9. A record from this system of records may be disclosed, as a routine use, to a Federal, State, or local law enforcement agency, if the USPTO becomes aware of a violation or potential violation of law or regulation.

Doc code : PET.OP.AGE
Description : Petition to make special based on Age/Health

PTO/SB/130 (07-09)
Approved for use through 07/31/2012. OMB 0651- 0031
U.S. Patent and Trademark Office; U.S. DEPARTMENT OF COMMERCE
Under the Paperwork Reduction Act of 1995, no persons are required to respond to a collection of information unless it contains a valid OMB control number

PETITION TO MAKE SPECIAL BASED ON AGE FOR ADVANCEMENT OF EXAMINATION UNDER 37 CFR 1.102(c)(1)

Application Information

Application Number	12887472	Confirmation Number	2572	Filing Date	2010-09-21
Attorney Docket Number (optional)	P8087US1	Art Unit	2617	Examiner	
First Named Inventor	Barry Corlett				
Title of Invention	METHODS FOR ADDRESSING EQUIPMENT IN TREE NETWORKS				

Attention: Office of Petitions

An application may be made special for advancement of examination upon filing of a petition showing that the applicant is 65 years of age, or more. No fee is required with such a petition. See 37 CFR 1.102(c)(1) and MPEP 708.02 (IV).

APPLICANT HEREBY PETITIONS TO MAKE SPECIAL FOR ADVANCEMENT OF EXAMINATION IN THIS APPLICATION UNDER 37 CFR 1.102(c)(1) and MPEP 708.02 (IV) ON THE BASIS OF THE APPLICANT'S AGE.

A grantable petition requires one of the following items:
(1) Statement by one named inventor in the application that he/she is 65 years of age, or more; or
(2) Certification by a registered attorney/agent having evidence such as a birth certificate, passport, driver's license, etc. showing one named inventor in the application is 65 years of age, or more.

Name of Inventor who is 65 years of age, or older

Given Name	Middle Name	Family Name	Suffix
Wendell	B	Sander	

A signature of the applicant or representative is required in accordance with 37 CFR 1.33 and 10.18. Please see 37 CFR 1.4(d) for the format of the signature.

Select (1) or (2) :

○ (1) I am an inventor in this application and I am 65 years of age, or more.

◉ (2) I am an attorney or agent registered to practice before the Patent and Trademark Office, and I certify that I am in possession of evidence, and will retain such in the application file record, showing that the inventor listed above is 65 years of age, or more.

Signature	/David C. Kellogg/	Date (YYYY-MM-DD)	2011-04-19
Name	David C. Kellogg	Registration Number	62958

PTO/SB/130 (07-09)
Approved for use through 07/31/2012. OMB 0651- 0031
U.S. Patent and Trademark Office; U.S. DEPARTMENT OF COMMERCE
Under the Paperwork Reduction Act of 1995, no persons are required to respond to a collection of information unless it contains a valid OMB control number

Privacy Act Statement

The Privacy Act of 1974 (P.L. 93-579) requires that you be given certain information in connection with your submission of the attached form related to a patent application or patent. Accordingly, pursuant to the requirements of the Act, please be advised that: (1) the general authority for the collection of this information is 35 U.S.C. 2(b)(2); (2) furnishing of the information solicited is voluntary; and (3) the principal purpose for which the information is used by the U.S. Patent and Trademark Office is to process and/or examine your submission related to a patent application or patent. If you do not furnish the requested information, the U.S. Patent and Trademark Office may not be able to process and/or examine your submission, which may result in termination of proceedings or abandonment of the application or expiration of the patent.

The information provided by you in this form will be subject to the following routine uses:

1. The information on this form will be treated confidentially to the extent allowed under the Freedom of Information Act (5 U.S.C. 552) and the Privacy Act (5 U.S.C. 552a). Records from this system of records may be disclosed to the Department of Justice to determine whether the Fr eedom of Information Act requires disclosure of these records.

2. A record from this system of records may be disclosed, as a routine use, in the course of presenting evidence to a court, magistrate, or administrative tribunal, including disclosures to opposing counsel in the course of settlement negotiations.

3. A record in this system of records may be disclosed, as a routine use, to a Member of Congress submitting a request involving an individual, to whom the record pertains, when the individual has requested assistance from the Member with respect to the subject matter of the record.

4. A record in this system of records may be disclosed, as a routine use, to a contractor of the Agency having need for the information in order to perform a contract. Recipients of information shall be required to comply with the requirements of the Privacy Act of 1974, as amended, pursuant to 5 U.S.C. 552a(m).

5. A record related to an International Application filed under the Patent Cooperation Treaty in this system of records may be disclosed, as a routine use, to the International Bureau of the World Intellectual Property Organization, pursuant to the Patent Cooperation Treaty.

6. A record in this system of records may be disclosed, as a routine use, to another federal agency for purposes of National Security review (35 U.S.C. 181) and for review pursuant to the Atomic Energy Act (42 U.S.C. 218(c)).

7. A record from this system of records may be disclosed, as a routine use, to the Administrator, General Services, or his/her designee, during an inspection of records conducted by GSA as part of that agency's responsibility to recommend improvements in records management practices and programs, under authority of 44 U.S.C. 2904 and 2906. Such disclosure shall be made in accordance with the GSA regulations governing inspection of records for this purpose, and any other relevant (i.e., GSA or Commerce) directive. Such disclosure shall not be used to make determinations about indivi duals.

8. A record from this system of records may be disclosed, as a routine use, to the public after either publication of the application pursuant to 35 U.S.C. 122(b) or issuance of a patent pursuant to 35 U.S.C. 151. Further, a record may be disclosed, subject to the limitations of 37 CFR 1.14, as a routine use, to the public if the record was filed in an application which became abandoned or in which the proceedings were terminated and which application is referenced by either a published application, an application open to public inspections or an issued patent.

9. A record from this system of records may be disclosed, as a routine use, to a Federal, State, or local law enforcement agency, if the USPTO becomes aware of a violation or potential violation of law or regulation.

UNITED STATES PATENT AND TRADEMARK OFFICE

Commissioner for Patents
United States Patent and Trademark Office
P.O. Box 1450
Alexandria, VA 22313-1450
www.uspto.gov

In re Application of
Barry Corlett

Application No. 12887472

Filed: September 21,2010

Attorney Docket No. P8087US1

:
:
:DECISION ON PETITION TO MAKE SPECIAL
:UNDER 37 CFR 1.102(c)(1)
:

This is a decision on the electronic petition under 37 CFR 1.102 (c)(1), filed 19-APR-2011 to make the above-identified application special based on applicant's age as set forth in MPEP § 708.02, Section IV.

The petition is **GRANTED**.

A grantable petition to make an application special under 37 CFR 1.102(c)(1), MPEP § 708.02, Section IV: Applicant's Age must include a statement by applicant or a registered practitioner having evidence that applicant is at least 65 years of age. No fee is required.

Accordingly, the above-identified application has been accorded "special" status and will be taken up for action by the examiner upon the completion of all pre-examination processing.

Telephone inquiries concerning this electronic decision should be directed to the Electronic Business Center at 866-217-9197.

All other inquiries concerning either the examination or status of the application should be directed to the Technology Center.

UNITED STATES PATENT AND TRADEMARK OFFICE

COMMISSIONER FOR PATENTS
UNITED STATES PATENT AND TRADEMARK OFFICE
P.O. BOX 1450
ALEXANDRIA, VA 22313-1450
WWW.USPTO.GOV

Paper No.

QUALCOMM INCORPORATED
5775 MOREHOUSE DR.
SAN DIEGO CA 92121

MAILED
JUN 21 2011
OFFICE OF PETITIONS

In re Application of :
Luby, Watson, Vicisano, Pakzad, :
Wang, Chen, and Stockhammer :
Application No. 12/887,476 : DECISION ON PETITION
Filed: September 21, 2010 : PURSUANT TO
Attorney Docket No. 093405U1 : 37 C.F.R. § 1.47(A)
Title: ENHANCED BLOCK-REQUEST :
STREAMING SYSTEM USING :
SIGNALING OR BLOCK CREATION :

This is in response to the petition pursuant to 37 C.F.R. § 1.47(a), filed May 12, 2011.[1] A supplement to this petition was received on June 16, 2011.

This petition is **DISMISSED.**

Receipt of the concurrently submitted replacement drawings is acknowledged.

The above-identified application was filed on September 21, 2010 without an oath or declaration, identifying Luby, Watson, Vicisano, Pakzad, Wang, Chen, and Stockhammer as joint inventors. On October 12, 2010, a "Notice to File Missing Parts of Nonprovisional Application - Filing Date Granted" was mailed, indicating that, *inter alia*, an executed declaration would be required, along with the surcharge associated with the late filing of the same. The notice set a two-month period for response.

A grantable petition pursuant to 37 C.F.R. § 1.47(a) requires:

(1) the petition fee of $200;
(2) a surcharge of either $65 or $130 if the

1 It is noted that similar petitions have been filed in application numbers 12/887,476, 12/887,483, 12/887,492, and 12/887,495.

petition is not filed at the time of filing the application, as set forth in 37 C.F.R. § 1.16(f);

(3) a statement of the last known address of each non-signing inventor;

(4) either

a) proof that a copy of the entire application (specification, claims, drawings, and the oath or declaration) was sent or given to each non-signing inventor for review and proof that each non-signing inventor refuses to join in the application or

b) proof that each non-signing inventor cannot be found or reached after diligent effort, and;

(5) a declaration which complies with 37 C.F.R. § 1.63.

With this petition, Petitioner has included the petition fee, a declaration that has been executed by each joint inventor save Mr. Vicisano, the surcharge associated with the late submission of a declaration, the last known address of the non-signing inventor,[2] an assertion that the non-signing inventor has refused to execute the declaration,[3] proof that he was provided with a copy of the application,[4] and that no response has been received.[5] Petitioner has further included a five-month extension of time so as to make timely this request.

37 C.F.R. § 1.47(a)(4) requires proof that a complete copy of the application was sent to each of the non-signing inventors. Petitioner has set forth that "the Application"[6] was sent to the non-signing inventor. The Office is construing this language to mean that *a complete copy* of Application No. 12/887,476 was sent to each non-signing inventor. Petitioner must notify the Office if this is not a correct interpretation of the statement contained in this petition.

Requirements (1) – (4) of Rule 1.47(a) have been satisfied. The fifth requirement of Rule 1.47(a) has not been satisfied, as will now be pointed out.

---

2 Unlabeled attachment entitled "Electronic Traffic Request."
3 Petition, page 1 and Golia declaration of facts, page 2.
4 Golia declaration of facts, page 1. See also "Electronic Traffic Request."
5 Petition, paragraph 3 and Kasmedo declaration of facts, page 2.
6 Golia declaration of facts, page 1.

Regarding the fifth requirement of Rule 1.47(a), it is noted that the address for non-signing inventor Vicisano that appears on the Supplemental Application Data Sheet (ADS) that was submitted on June 16, 2011 is not the same address that was given as his last known address:

- the declaration that was included with this petition does not contain an address for the non-signing inventor;
- the ADS which was included on initial deposit lists the non-signing inventor's address as "3195 Kifer Road, Santa Clara, CA, 95051;"
- the "Electronic Traffic Request" lists the non-signing inventor's last known address as 1070 Grizzly Park (emphasis added) Blvd., Berkeley, CA, 94708;[7]
- the Supplemental ADS that was filed on June 16, 2011 "Electronic Traffic Request" lists the non-signing inventor's last known address as 1070 Grizzly Peak (emphasis added) Blvd., Berkeley, CA, 94708.

Presuming that the address to which a copy of the application was sent is the correct address, **Petitioner will need to submit a properly titled and executed supplemental Application Data Sheet that contains the correct address for Mr. Vicisano.**

Any reply must be submitted within **TWO MONTHS** from the mail date of this decision. Extensions of time under 37 C.F.R. § 1.136(a) are permitted. The reply should include a cover letter entitled "Renewed Petition pursuant to 37 C.F.R. § 1.47(a)". This is not a final agency action within the meaning of 5 U.S.C § 704.

Petitioner should note that any statement that appears therein should be made by one having firsthand knowledge of the event. Statements based on hearsay are not normally accepted.

Any response to this decision should indicate in a prominent manner that the attorney handling this matter is Paul Shanoski, and may be submitted by mail,[8] hand-delivery,[9] or facsimile.[10] Registered users of EFS-Web may alternatively submit a response to this decision via EFS-Web.[11]

---

7 On June 14, 2011, the undersigned contacted Petitioner telephonically and informed him of this discrepancy.
8 Mail Stop Petition, Commissioner for Patents, United States Patent and Trademark Office, P.O. Box 1450, Alexandria, VA, 22313-1450.
9 Customer Window, Randolph Building, 401 Dulaney Street, Alexandria, VA, 22314.
10 (571) 273-8300: please note this is a central facsimile number.
11 https://sportal.uspto.gov/authenticate/authenticateuserlocalepf.html

If responding by mail, Petitioner is advised not to place the undersigned's name on the envelope. Only the information that appears in the footnote should be included - adding anything else to the address will delay the delivery of the response to the undersigned.

Telephone inquiries regarding *this decision* should be directed to the undersigned at (571) 272-3225.[12] All other inquiries concerning examination procedures should be directed to the Technology Center.

/Paul Shanoski/
Paul Shanoski
Senior Attorney
Office of Petitions

12 Petitioner will note that all practice before the Office should be in writing, and the action of the Office will be based exclusively on the written record in the Office. See 37 C.F.R. § 1.2. As such, Petitioner is reminded that no telephone discussion may be controlling or considered authority for any further action(s) of Petitioner.

UNITED STATES PATENT AND TRADEMARK OFFICE

COMMISSIONER FOR PATENTS
UNITED STATES PATENT AND TRADEMARK OFFICE
P.O. BOX 1450
ALEXANDRIA, VA 22313-1450
WWW.USPTO.GOV

Paper No.

QUALCOMM INCORPORATED
5775 MOREHOUSE DR.
SAN DIEGO CA 92121

MAILED

AUG 30 2011

OFFICE OF PETITIONS

In re Application of :
Luby, Watson, Vicisano, Pakzad, :
Wang, Chen, and Stockhammer :
Application No. 12/887,476 :
Filed: September 21, 2010 :
Attorney Docket No. 093405U1 :
Title: ENHANCED BLOCK-REQUEST :
STREAMING SYSTEM USING :
SIGNALING OR BLOCK CREATION :

DECISION ON RENEWED PETITION
PURSUANT TO
37 C.F.R. § 1.47(A)

This is in response to the renewed petition pursuant to 37 C.F.R. § 1.47(a), filed August 22, 2011.[1]

This renewed petition is **GRANTED**.

Receipt of the concurrently submitted Supplemental Application Data Sheet (ADS) is acknowledged.

The above-identified application was filed on September 21, 2010 without an oath or declaration, identifying Luby, Watson, Vicisano, Pakzad, Wang, Chen, and Stockhammer as joint inventors. On October 12, 2010, a "Notice to File Missing Parts of Nonprovisional Application - Filing Date Granted" was mailed, indicating that, *inter alia*, an executed declaration would be required, along with the surcharge associated with the late filing of the same. The notice set a two-month period for response.

A grantable petition pursuant to 37 C.F.R. § 1.47(a) requires:

(1) the petition fee of $200;
(2) a surcharge of either $65 or $130 if the petition is not filed at the time of filing the application, as set forth in 37 C.F.R.

1 It is noted that August 21, 2011 fell on a Sunday.

§ 1.16(f);
(3) a statement of the last known address of each non-signing inventor;
(4) either
a) proof that a copy of the entire application (specification, claims, drawings, and the oath or declaration) was sent or given to each non-signing inventor for review and proof that each non-signing inventor refuses to join in the application or
b) proof that each non-signing inventor cannot be found or reached after diligent effort, and;
(5) a declaration which complies with 37 C.F.R. § 1.63.

An original petition pursuant to 37 C.F.R. § 1.47(a) was filed on May 12, 2011 and supplemented on June 16, 2011. Petitioner included the petition fee, a declaration that has been executed by each joint inventor save Mr. Vicisano, the surcharge associated with the late submission of the petition, the last known address of the non-signing inventor,[2] an assertion that the non-signing inventor has refused to execute the declaration,[3] and proof that he was provided with a copy of the application[4] and that no response has been received.[5] Petitioner further included a five-month extension of time so as to make timely this request.[6] The $200 petition fee was charged to Deposit Account No. 17-0026 on June 16, 2011.

The original petition was dismissed via the mailing of a decision on June 21, 2011, which indicated that requirements (1) - (4) of Rule 1.47(a) have been satisfied.

With this renewed petition, Petitioner has indicated that although the package that was mailed to the non-signing inventor was addressed to "1070 Grizzly Park (emphasis added) Blvd., Berkeley, CA, 94708," Petitioner has received confirmation that the package was delivered to Mr. Vicisano's last known address (1070 Grizzly Peak (emphasis added) Blvd., Berkeley, CA, 94708."[7]

---

2 Unlabeled attachment entitled "Electronic Traffic Request."
3 Petition, page 1 and Golia declaration of facts, page 2.
4 Golia declaration of facts, page 1. See also "Electronic Traffic Request."
5 Petition, paragraph 3 and Kasmedo declaration of facts, page 2.
6 It is noted that May 8, 2011 fell on a Sunday.
7 Golia declaration of facts provided with this renewed petition, page 2.

Petitioner has also included the $200 petition fee with this renewed petition. This duplicate payment will be refunded to Deposit Account No. 17-0026 in due course.

It follows that the fifth requirement of Rule 1.47(a) has been satisfied.

Each of the five requirements of 37 C.F.R. § 1.47(a) has been satisfied. This application is hereby accorded Rule 1.47(a) status. As provided in Rule 1.47, this Office will forward notice of this application's filing to the non-signing inventor at the address given in Supplemental ADS that was submitted concurrently with this renewed petition. Notice of the filing of this application will also be published in the Official Gazette.

The Technology Center will be notified of this decision, and jurisdiction over this application is transferred to the Technology Center, so that the application may receive further processing. The Technology Center's support staff will notify the Examiner of this decision, so that the present application can receive further processing in due course.

Telephone inquiries regarding *this decision* should be directed to the undersigned at (571) 272-3225.[8] All other inquiries concerning examination procedures or status of the application should be directed to the Technology Center.

/Paul Shanoski/
Paul Shanoski
Senior Attorney
Office of Petitions

8 Petitioner will note that all practice before the Office should be in writing, and the action of the Office will be based exclusively on the written record in the Office. See 37 C.F.R. § 1.2. As such, Petitioner is reminded that no telephone discussion may be controlling or considered authority for Petitioner's further action(s).

UNITED STATES PATENT AND TRADEMARK OFFICE

Commissioner for Patents
United States Patent and Trademark Office
P.O. Box 1450
Alexandria, VA 22313-1450
www.uspto.gov

Lorenzo Vicisano
1070 Grizzly Peak Blvd.
Berkeley, CA 94708

MAILED
AUG 30 2011
OFFICE OF PETITIONS

In re Application of :
Luby, Watson, Vicisano, :
Pakzad, Wang, Chen, and :
Stockhammer :
Application No. 12/887,476 : LETTER
Filed: September 21, 2010 :
Attorney Docket No. 093405U1 :
Title: ENHANCED BLOCK- :
REQUEST STREAMING SYSTEM :
USING SIGNALING OR BLOCK :
CREATION :

Dear Mr. Vicisano:

You are named a joint inventor in the above-identified United States patent application filed under the provisions of 35 U.S.C. § 116 (United States Code) and 37 C.F.R. § 1.47(a), Rules of Practice in Patent Cases. Should a patent be granted on the application, you will be designated therein as a joint inventor.

As a named inventor you are entitled to inspect any paper in the file wrapper of the application, order copies of all or any part thereof (at a prepaid cost per 37 C.F.R. § 1.19) or make your position of record in the application. Alternatively, you may arrange to do any of the preceding through a registered patent attorney or agent presenting written authorization from you. If you care to join the application, the attorney of record below would presumably assist you. Joining in the application would entail the filing of an appropriate oath or declaration by you pursuant to 37 C.F.R. § 1.63.

Telephone inquiries regarding this communication should be directed to the undersigned at (571) 272-3225. Requests for information regarding your application should be directed to the File Information Unit at (703) 308-2733. Information regarding how to pay for and order a copy of the application, or a specific paper in the application, should be directed to the Certification Division at (571) 272-3150 or 1-800-972-6382 (outside the Washington D.C. area).

/Paul Shanoski/
Paul Shanoski
Senior Attorney
Office of Petitions

cc: QUALCOMM INCORPORATED
5775 MOREHOUSE DR.
SAN DIEGO CA 92121

UNITED STATES PATENT AND TRADEMARK OFFICE

Commissioner for Patents
United States Patent and Trademark Office
P.O. Box 1450
Alexandria, VA 22313-1450
www.uspto.gov

VENABLE LLP
P.O. BOX 34385
WASHINGTON, DC 20043-9998

MAILED
MAR 22 2012
OFFICE OF PETITIONS

In re Application of :
Jesse Caulfield :
Application No. 12/887,482 : DECISION ON PETITION
Filed: September 21, 2010 : TO WITHDRAW FROM
Attorney Docket No. 118849-291193 : RECORD

This is a decision on the Request to Withdraw as attorney or agent of record under 37 CFR §§ 1.36(b) or 37 CFR 10.40, filed February 22, 2012.

The request is **APPROVED**.

The request was signed by Michael A. Satori on behalf of himself and all the attorneys/agents associated with Customer Number 26694. Therefore, Michael A. Satori and all the attorneys/agents associated with Customer Number 26694 have been withdrawn.

Applicant is reminded that there are no attorneys/agents of record at this time.

All future communications from the Office will be directed to the address listed below until otherwise properly notified by the applicant.

Telephone inquiries concerning this decision should be directed to the undersigned at (571) 272-3226.

/Andrea Smith/
Andrea Smith
Petitions Examiner
Office of Petitions

cc: Key Bridge Global LLC
1600 Tysons Blvd., Suite 1100
McLean, VA 22102

UNITED STATES PATENT AND TRADEMARK OFFICE

UNITED STATES DEPARTMENT OF COMMERCE
United States Patent and Trademark Office
Address: COMMISSIONER FOR PATENTS
P.O. Box 1450
Alexandria, Virginia 22313-1450
www.uspto.gov

APPLICATION NUMBER	FILING OR 371(C) DATE	FIRST NAMED APPLICANT	ATTY. DOCKET NO./TITLE
12/887,482	09/21/2010	Jesse Caulfield	118849-291193

CONFIRMATION NO. 2590

POWER OF ATTORNEY NOTICE

26694
VENABLE LLP
P.O. BOX 34385
WASHINGTON, DC 20043-9998

Date Mailed: 03/19/2012

NOTICE REGARDING CHANGE OF POWER OF ATTORNEY

This is in response to the Power of Attorney filed 02/22/2012.

- The withdrawal as attorney in this application has been accepted. Future correspondence will be mailed to the new address of record. 37 CFR 1.33.

/amsmith/

Office of Data Management, Application Assistance Unit (571) 272-4000, or (571) 272-4200, or 1-888-786-0101

UNITED STATES PATENT AND TRADEMARK OFFICE

COMMISSIONER FOR PATENTS
UNITED STATES PATENT AND TRADEMARK OFFICE
P.O. BOX 1450
ALEXANDRIA, VA 22313-1450
WWW.USPTO.GOV

Paper No.

QUALCOMM INCORPORATED
5775 MOREHOUSE DR.
SAN DIEGO CA 92121

MAILED
JUN 21 2011
OFFICE OF PETITIONS

In re Application of :
Luby, Watson, Vicisano, Pakzad, :
and Wang :
Application No. 12/887,483 : DECISION ON PETITION
Filed: September 21, 2010 : PURSUANT TO
Attorney Docket No. 093405U3 : 37 C.F.R. § 1.47(A)
Title: ENHANCED BLOCK-REQUEST :
STREAMING USING BLOCK :
PARTITIONING OR REQUEST :
CONTROLS FOR IMPROVED CLIENT- :
SIDE HANDLING :

This is in response to the petition pursuant to 37 C.F.R. § 1.47(a), filed May 9, 2011.[1] A supplement to this petition was received on June 16, 2011.

This petition is **DISMISSED.**

Receipt of the concurrently submitted replacement drawings is acknowledged.

The above-identified application was filed on September 21, 2010 without an oath or declaration, identifying Luby, Watson, Vicisano, Pakzad, and Wang as joint inventors. On October 8, 2010, a "Notice to File Missing Parts of Nonprovisional Application - Filing Date Granted" was mailed, indicating that, *inter alia*, an executed declaration would be required, along with the surcharge associated with the late filing of the same. The notice set a two-month period for response.

A grantable petition pursuant to 37 C.F.R. § 1.47(a) requires:

(1) the petition fee of $200;

1 It is noted that similar petitions have been filed in application numbers 12/887,483, 12/887,483, 12/887,492, and 12/887,495.

(2) a surcharge of either $65 or $130 if the petition is not filed at the time of filing the application, as set forth in 37 C.F.R. § 1.16(f);
(3) a statement of the last known address of each non-signing inventor;
(4) either
  a) proof that a copy of the entire application (specification, claims, drawings, and the oath or declaration) was sent or given to each non-signing inventor for review and proof that each non-signing inventor refuses to join in the application or
  b) proof that each non-signing inventor cannot be found or reached after diligent effort, and;
(5) a declaration which complies with 37 C.F.R. § 1.63.

With this petition, Petitioner has included a declaration that has been executed by each joint inventor save Mr. Vicisano, the surcharge associated with the late submission of a declaration, the last known address of the non-signing inventor,[2] an assertion that the non-signing inventor has refused to execute the declaration,[3] proof that he was provided with a copy of the application,[4] and that no response has been received.[5] Petitioner has further included a five-month extension of time so as to make timely this request.[6]

The $200 petition fee will be charged to Deposit Account No. 17-0026 in due course, as authorized on the second page of this petition.

37 C.F.R. § 1.47(a)(4) requires proof that a complete copy of the application was sent to each of the non-signing inventors. Petitioner has set forth that "the Application"[7] was sent to the non-signing inventor. The Office is construing this language to mean that *a complete copy* of Application No. 12/887,483 was sent to the non-signing inventor. Petitioner must notify the Office

2 Unlabeled attachment entitled "Electronic Traffic Request."
3 Petition, page 1 and Golia declaration of facts, page 2.
4 Golia declaration of facts, page 1. See also "Electronic Traffic Request."
5 Petition, paragraph 3 and Kasmedo declaration of facts, page 2.
6 It is noted that May 8, 2011 fell on a Sunday.
7 Golia declaration of facts, page 1.

if this is not a correct interpretation of the statement contained in this petition.

Requirements (1) - (4) of Rule 1.47(a) have been satisfied. The fifth requirement of Rule 1.47(a) has not been satisfied, as will now be pointed out.

Regarding the fifth requirement of Rule 1.47(a), it is noted that the address for non-signing inventor Vicisano that appears on the Supplemental Application Data Sheet (ADS) that was submitted on June 16, 2011 is not the same address that was given as his last known address:

- the declaration that was included with this petition does not contain an address for the non-signing inventor;
- the ADS which was included on initial deposit lists the non-signing inventor's address as "3195 Kifer Road, Santa Clara, CA, 95051;"
- the "Electronic Traffic Request" lists the non-signing inventor's last known address as 1070 Grizzly Park (emphasis added) Blvd., Berkeley, CA, 94708;[8]
- the Supplemental ADS that was filed on June 16, 2011 "Electronic Traffic Request" lists the non-signing inventor's last known address as 1070 Grizzly Peak (emphasis added) Blvd., Berkeley, CA, 94708.

Presuming that the address to which a copy of the application was sent is the correct address, **Petitioner will need to submit a properly titled and executed supplemental Application Data Sheet that contains the correct address for Mr. Vicisano.**

Any reply must be submitted within **TWO MONTHS** from the mail date of this decision. Extensions of time under 37 C.F.R. § 1.136(a) are permitted. The reply should include a cover letter entitled "Renewed Petition pursuant to 37 C.F.R. § 1.47(a)". This is not a final agency action within the meaning of 5 U.S.C § 704.

Petitioner should note that any statement that appears therein should be made by one having firsthand knowledge of the event. Statements based on hearsay are not normally accepted.

Any response to this decision should indicate in a prominent manner that the attorney handling this matter is Paul Shanoski,

8 On June 14, 2011, the undersigned contacted Petitioner telephonically and informed him of this discrepancy.

and may be submitted by mail,[9] hand-delivery,[10] or facsimile.[11] Registered users of EFS-Web may alternatively submit a response to this decision via EFS-Web.[12]

If responding by mail, Petitioner is advised not to place the undersigned's name on the envelope. Only the information that appears in the footnote should be included - adding anything else to the address will delay the delivery of the response to the undersigned.

Telephone inquiries regarding *this decision* should be directed to the undersigned at (571) 272-3225.[13] All other inquiries concerning examination procedures should be directed to the Technology Center.

/Paul Shanoski/
Paul Shanoski
Senior Attorney
Office of Petitions

9 Mail Stop Petition, Commissioner for Patents, United States Patent and Trademark Office, P.O. Box 1450, Alexandria, VA, 22313-1450.
10 Customer Window, Randolph Building, 401 Dulaney Street, Alexandria, VA, 22314.
11 (571) 273-8300: please note this is a central facsimile number.
12 https://sportal.uspto.gov/authenticate/authenticateuserlocalepf.html
13 Petitioner will note that all practice before the Office should be in writing, and the action of the Office will be based exclusively on the written record in the Office. See 37 C.F.R. § 1.2. As such, Petitioner is reminded that no telephone discussion may be controlling or considered authority for any further action(s) of Petitioner.

UNITED STATES PATENT AND TRADEMARK OFFICE

COMMISSIONER FOR PATENTS
UNITED STATES PATENT AND TRADEMARK OFFICE
P.O. BOX 1450
ALEXANDRIA, VA 22313-1450
WWW.USPTO.GOV

Paper No.

QUALCOMM INCORPORATED
5775 MOREHOUSE DR.
SAN DIEGO CA 92121

MAILED
AUG 30 2011
OFFICE OF PETITIONS

In re Application of :
Luby, Watson, Vicisano, Pakzad, :
and Wang :
Application No. 12/887,483 : DECISION ON RENEWED PETITION
Filed: September 21, 2010 : PURSUANT TO
Attorney Docket No. 093405U3 : 37 C.F.R. § 1.47(A)
Title: ENHANCED BLOCK-REQUEST :
STREAMING USING BLOCK :
PARTITIONING OR REQUEST :
CONTROLS FOR IMPROVED CLIENT- :
SIDE HANDLING :

This is in response to the renewed petition pursuant to 37 C.F.R. § 1.47(a), filed August 22, 2011.[1]

This renewed petition is **GRANTED.**

Receipt of the concurrently submitted Supplemental Application Data Sheet (ADS) is acknowledged.

The above-identified application was filed on September 21, 2010 without an oath or declaration, identifying Luby, Watson, Vicisano, Pakzad, and Wang as joint inventors. On October 8, 2010, a "Notice to File Missing Parts of Nonprovisional Application - Filing Date Granted" was mailed, indicating that, *inter alia*, an executed declaration would be required, along with the surcharge associated with the late filing of the same. The notice set a two-month period for response.

A grantable petition pursuant to 37 C.F.R. § 1.47(a) requires:

(1) the petition fee of $200;
(2) a surcharge of either $65 or $130 if the petition is not filed at the time of filing

1 It is noted that August 21, 2011 fell on a Sunday.

the application, as set forth in 37 C.F.R. § 1.16(f);
(3) a statement of the last known address of each non-signing inventor;
(4) either
a) proof that a copy of the entire application (specification, claims, drawings, and the oath or declaration) was sent or given to each non-signing inventor for review and proof that each non-signing inventor refuses to join in the application or
b) proof that each non-signing inventor cannot be found or reached after diligent effort, and;
(5) a declaration which complies with 37 C.F.R. § 1.63.

An original petition pursuant to 37 C.F.R. § 1.47(a) was filed on May 12, 2011 and supplemented on June 16, 2011. Petitioner included a declaration that has been executed by each joint inventor save Mr. Vicisano, the surcharge associated with the late submission of the petition, the last known address of the non-signing inventor,[2] an assertion that the non-signing inventor has refused to execute the declaration,[3] and proof that he was provided with a copy of the application[4] and that no response has been received.[5] Petitioner further included a five-month extension of time so as to make timely this request.[6] The $200 petition fee was charged to Deposit Account No. 17-0026 on June 20, 2011.

The original petition was dismissed via the mailing of a decision on June 21, 2011, which indicated that requirements (1) - (4) of Rule 1.47(a) have been satisfied.

With this renewed petition, Petitioner has indicated that although the package that was mailed to the non-signing inventor was addressed to "1070 Grizzly Park (emphasis added) Blvd., Berkeley, CA, 94708," he has received confirmation that the package was delivered to Mr. Vicisano's last known address (1070 Grizzly Peak (emphasis added) Blvd., Berkeley, CA, 94708."[7]

---

2 Unlabeled attachment entitled "Electronic Traffic Request."
3 Petition, page 1 and Golia declaration of facts, page 2.
4 Golia declaration of facts, page 1. See also "Electronic Traffic Request."
5 Petition, paragraph 3 and Kasmedo declaration of facts, page 2.
6 It is noted that May 8, 2011 fell on a Sunday.
7 Golia declaration of facts provided with this renewed petition, page 2.

Petitioner has also included the $200 petition fee with this renewed petition. This duplicate payment will be refunded to Deposit Account No. 17-0026 in due course.

It follows that the fifth requirement of Rule 1.47(a) has been satisfied.

Each of the five requirements of 37 C.F.R. § 1.47(a) has been satisfied. This application is hereby accorded Rule 1.47(a) status. As provided in Rule 1.47, this Office will forward notice of this application's filing to the non-signing inventor at the address given in the Supplemental ADS that was submitted concurrently with this petition. Notice of the filing of this application will also be published in the Official Gazette.

The Technology Center will be notified of this decision, and jurisdiction over this application is transferred to the Technology Center, so that the application may receive further processing. The Technology Center's support staff will notify the Examiner of this decision, so that the present application can receive further processing in due course.

Telephone inquiries regarding *this decision* should be directed to the undersigned at (571) 272-3225.[8] All other inquiries concerning examination procedures or status of the application should be directed to the Technology Center.

/Paul Shanoski/
Paul Shanoski
Senior Attorney
Office of Petitions

---

8 Petitioner will note that all practice before the Office should be in writing, and the action of the Office will be based exclusively on the written record in the Office. See 37 C.F.R. § 1.2. As such, Petitioner is reminded that no telephone discussion may be controlling or considered authority for Petitioner's further action(s).

UNITED STATES PATENT AND TRADEMARK OFFICE

Commissioner for Patents
United States Patent and Trademark Office
P.O. Box 1450
Alexandria, VA 22313-1450
www.uspto.gov

Lorenzo Vicisano
1070 Grizzly Peak Blvd.
Berkeley, CA 94708

MAILED
AUG 30 2011
OFFICE OF PETITIONS

In re Application of :
Luby, Watson, Vicisano, :
Pakzad, and Wang :
Application No. 12/887,483 : LETTER
Filed: September 21, 2010 :
Attorney Docket No. 093405U3 :
Title: ENHANCED BLOCK-REQUEST :
STREAMING USING BLOCK :
PARTITIONING OR REQUEST :
CONTROLS FOR IMPROVED CLIENT- :
SIDE HANDLING :

Dear Mr. Vicisano:

You are named a joint inventor in the above-identified United States patent application filed under the provisions of 35 U.S.C. § 116 (United States Code) and 37 C.F.R. § 1.47(a), Rules of Practice in Patent Cases. Should a patent be granted on the application, you will be designated therein as a joint inventor.

As a named inventor you are entitled to inspect any paper in the file wrapper of the application, order copies of all or any part thereof (at a prepaid cost per 37 C.F.R. § 1.19) or make your position of record in the application. Alternatively, you may arrange to do any of the preceding through a registered patent attorney or agent presenting written authorization from you. If you care to join the application, the attorney of record below would presumably assist you. Joining in the application would entail the filing of an appropriate oath or declaration by you pursuant to 37 C.F.R. § 1.63.

Telephone inquiries regarding this communication should be directed to the undersigned at (571) 272-3225. Requests for information regarding your application should be directed to the File Information Unit at (703) 308-2733. Information regarding how to pay for and order a copy of the application, or a specific paper in the application, should be directed to the Certification Division at (571) 272-3150 or 1-800-972-6382 (outside the Washington D.C. area).

/Paul Shanoski/
Paul Shanoski
Senior Attorney
Office of Petitions

cc: QUALCOMM INCORPORATED
5775 MOREHOUSE DR.
SAN DIEGO CA 92121

UNITED STATES PATENT AND TRADEMARK OFFICE

COMMISSIONER FOR PATENTS
UNITED STATES PATENT AND TRADEMARK OFFICE
P.O. BOX 1450
ALEXANDRIA, VA 22313-1450
WWW.USPTO.GOV

Paper No.

QUALCOMM INCORPORATED
5775 MOREHOUSE DR.
SAN DIEGO CA 92121

MAILED

JUN 21 2011

OFFICE OF PETITIONS

In re Application of :
Luby, Watson, Vicisano, Pakzad, :
Wang, and Stockhammer :
Application No. 12/887,492 : DECISION ON PETITION
Filed: September 21, 2010 : PURSUANT TO
Attorney Docket No. 093405U4 : 37 C.F.R. § 1.47(A)
Title: ENHANCED BLOCK-REQUEST :
STREAMING USING URL TEMPLATES :
AND CONSTRUCTION RULES :

This is in response to the petition pursuant to 37 C.F.R. § 1.47(a), filed May 9, 2011.[1] A supplement to this petition was received on June 16, 2011.

This petition is **DISMISSED.**

Receipt of the concurrently submitted replacement drawings is acknowledged.

The above-identified application was filed on September 21, 2010 without an oath or declaration, identifying Luby, Watson, Vicisano, Pakzad, Wang, and Stockhammer as joint inventors. On October 8, 2010, a "Notice to File Missing Parts of Nonprovisional Application - Filing Date Granted" was mailed, indicating that, *inter alia*, an executed declaration would be required, along with the surcharge associated with the late filing of the same. The notice set a two-month period for response.

A grantable petition pursuant to 37 C.F.R. § 1.47(a) requires:

(1) the petition fee of $200;
(2) a surcharge of either $65 or $130 if the

1 It is noted that similar petitions have been filed in application numbers 12/887,492, 12/887,492, 12/887,492, and 12/887,495.

petition is not filed at the time of filing the application, as set forth in 37 C.F.R. § 1.16(f);

(3) a statement of the last known address of each non-signing inventor;

(4) either

a) proof that a copy of the entire application (specification, claims, drawings, and the oath or declaration) was sent or given to each non-signing inventor for review and proof that each non-signing inventor refuses to join in the application or

b) proof that each non-signing inventor cannot be found or reached after diligent effort, and;

(5) a declaration which complies with 37 C.F.R. § 1.63.

With this petition, Petitioner has included a declaration that has been executed by each joint inventor save Mr. Vicisano, the surcharge associated with the late submission of a declaration, the last known address of the non-signing inventor,[2] an assertion that the non-signing inventor has refused to execute the declaration,[3] proof that he was provided with a copy of the application,[4] and that no response has been received.[5] Petitioner has further included a five-month extension of time so as to make timely this request.[6]

The $200 petition fee will be charged to Deposit Account No. 17-0026 in due course, as authorized on the second page of this petition.

37 C.F.R. § 1.47(a)(4) requires proof that a complete copy of the application was sent to each of the non-signing inventors. Petitioner has set forth that "the Application"[7] was sent to the non-signing inventor. The Office is construing this language to mean that *a complete copy* of Application No. 12/887,492 was sent to the non-signing inventor. Petitioner must notify the Office

2 Unlabeled attachment entitled "Electronic Traffic Request."
3 Petition, page 1 and Golia declaration of facts, page 2.
4 Golia declaration of facts, page 1. See also "Electronic Traffic Request."
5 Petition, paragraph 3 and Kasmedo declaration of facts, page 2.
6 It is noted that May 8, 2011 fell on a Sunday.
7 Golia declaration of facts, page 1.

if this is not a correct interpretation of the statement contained in this petition.

Requirements (1) - (4) of Rule 1.47(a) have been satisfied. The fifth requirement of Rule 1.47(a) has not been satisfied, as will now be pointed out.

Regarding the fifth requirement of Rule 1.47(a), it is noted that the address for non-signing inventor Vicisano that appears on the Supplemental Application Data Sheet (ADS) that was submitted on June 16, 2011 is not the same address that was given as his last known address:

- the declaration that was included with this petition does not contain an address for the non-signing inventor;
- the ADS which was included on initial deposit lists the non-signing inventor's address as "3195 Kifer Road, Santa Clara, CA, 95051;"
- the "Electronic Traffic Request" lists the non-signing inventor's last known address as 1070 Grizzly Park (emphasis added) Blvd., Berkeley, CA, 94708;[8]
- the Supplemental ADS that was filed on June 16, 2011 "Electronic Traffic Request" lists the non-signing inventor's last known address as 1070 Grizzly Peak (emphasis added) Blvd., Berkeley, CA, 94708.

Presuming that the address to which a copy of the application was sent is the correct address, **Petitioner will need to submit a properly titled and executed supplemental Application Data Sheet that contains the correct address for Mr. Vicisano.**

Any reply must be submitted within **TWO MONTHS** from the mail date of this decision. Extensions of time under 37 C.F.R. § 1.136(a) are permitted. The reply should include a cover letter entitled "Renewed Petition pursuant to 37 C.F.R. § 1.47(a)". This is not a final agency action within the meaning of 5 U.S.C § 704.

Petitioner should note that any statement that appears therein should be made by one having firsthand knowledge of the event. Statements based on hearsay are not normally accepted.

Any response to this decision should indicate in a prominent manner that the attorney handling this matter is Paul Shanoski,

8 On June 14, 2011, the undersigned contacted Petitioner telephonically and informed him of this discrepancy.

and may be submitted by mail,[9] hand-delivery,[10] or facsimile.[11] Registered users of EFS-Web may alternatively submit a response to this decision via EFS-Web.[12]

If responding by mail, Petitioner is advised not to place the undersigned's name on the envelope. Only the information that appears in the footnote should be included - adding anything else to the address will delay the delivery of the response to the undersigned.

Telephone inquiries regarding *this decision* should be directed to the undersigned at (571) 272-3225.[13] All other inquiries concerning examination procedures should be directed to the Technology Center.

/Paul Shanoski/
Paul Shanoski
Senior Attorney
Office of Petitions

---

9 Mail Stop Petition, Commissioner for Patents, United States Patent and Trademark Office, P.O. Box 1450, Alexandria, VA, 22313-1450.
10 Customer Window, Randolph Building, 401 Dulaney Street, Alexandria, VA, 22314.
11 (571) 273-8300: please note this is a central facsimile number.
12 https://sportal.uspto.gov/authenticate/authenticateuserlocalepf.html
13 Petitioner will note that all practice before the Office should be in writing, and the action of the Office will be based exclusively on the written record in the Office. See 37 C.F.R. § 1.2. As such, Petitioner is reminded that no telephone discussion may be controlling or considered authority for any further action(s) of Petitioner.

UNITED STATES PATENT AND TRADEMARK OFFICE

COMMISSIONER FOR PATENTS
UNITED STATES PATENT AND TRADEMARK OFFICE
P.O. BOX 1450
ALEXANDRIA, VA 22313-1450
WWW.USPTO.GOV

Paper No.

QUALCOMM INCORPORATED
5775 MOREHOUSE DR.
SAN DIEGO CA 92121

MAILED
AUG 30 2011
OFFICE OF PETITIONS

In re Application of :
Luby, Watson, Vicisano, Pakzad, :
Wang, and Stockhammer :
Application No. 12/887,492 : DECISION ON RENEWED PETITION
Filed: September 21, 2010 : PURSUANT TO
Attorney Docket No. 093405U4 : 37 C.F.R. § 1.47(A)
Title: ENHANCED BLOCK-REQUEST :
STREAMING USING URL TEMPLATES :
AND CONSTRUCTION RULES :

This is in response to the renewed petition pursuant to 37 C.F.R. § 1.47(a), filed August 22, 2011.[1]

This renewed petition is **GRANTED.**

Receipt of the concurrently submitted Supplemental Application Data Sheet (ADS) is acknowledged.

The above-identified application was filed on September 21, 2010 without an oath or declaration, identifying Luby, Watson, Vicisano, Pakzad, Wang, and Stockhammer as joint inventors. On October 8, 2010, a "Notice to File Missing Parts of Nonprovisional Application - Filing Date Granted" was mailed, indicating that, *inter alia*, an executed declaration would be required, along with the surcharge associated with the late filing of the same. The notice set a two-month period for response.

A grantable petition pursuant to 37 C.F.R. § 1.47(a) requires:

(1) the petition fee of $200;
(2) a surcharge of either $65 or $130 if the petition is not filed at the time of filing the application, as set forth in 37 C.F.R.

1 It is noted that August 21, 2011 fell on a Sunday.

§ 1.16(f);
(3) a statement of the last known address of each non-signing inventor;
(4) either
a) proof that a copy of the entire application (specification, claims, drawings, and the oath or declaration) was sent or given to each non-signing inventor for review and proof that each non-signing inventor refuses to join in the application or
b) proof that each non-signing inventor cannot be found or reached after diligent effort, and;
(5) a declaration which complies with 37 C.F.R. § 1.63.

An original petition pursuant to 37 C.F.R. § 1.47(a) was filed on May 12, 2011 and supplemented on June 16, 2011. Petitioner included a declaration that has been executed by each joint inventor save Mr. Vicisano, the surcharge associated with the late submission of the petition, the last known address of the non-signing inventor,[2] an assertion that the non-signing inventor has refused to execute the declaration,[3] and proof that he was provided with a copy of the application[4] and that no response has been received.[5] Petitioner further included a five-month extension of time so as to make timely this request.[6] The $200 petition fee was charged to Deposit Account No. 17-0026 on June 20, 2011.

The original petition was dismissed via the mailing of a decision on June 21, 2011, which indicated that requirements (1) - (4) of Rule 1.47(a) have been satisfied.

With this renewed petition, Petitioner has indicated that although the package that was mailed to the non-signing inventor was addressed to "1070 Grizzly Park (emphasis added) Blvd., Berkeley, CA, 94708," he has received confirmation that the package was delivered to Mr. Vicisano's last known address (1070 Grizzly Peak (emphasis added) Blvd., Berkeley, CA, 94708."[7]

---

2 Unlabeled attachment entitled "Electronic Traffic Request."
3 Petition, page 1 and Golia declaration of facts, page 2.
4 Golia declaration of facts, page 1. See also "Electronic Traffic Request."
5 Original petition, paragraph 3 and Kasmedo declaration of facts, page 2.
6 It is noted that May 8, 2011 fell on a Sunday.
7 Golia declaration of facts provided with this renewed petition, page 2.

Petitioner has also included the $200 petition fee with this renewed petition. This duplicate payment will be refunded to Deposit Account No. 17-0026 in due course.

It follows that the fifth requirement of Rule 1.47(a) has been satisfied.

Each of the five requirements of 37 C.F.R. § 1.47(a) has been satisfied. This application is hereby accorded Rule 1.47(a) status. As provided in Rule 1.47, this Office will forward notice of this application's filing to the non-signing inventor at the address given in the Supplemental ADS that was submitted concurrently with this petition. Notice of the filing of this application will also be published in the Official Gazette.

The Technology Center will be notified of this decision, and jurisdiction over this application is transferred to the Technology Center, so that the application may receive further processing. The Technology Center's support staff will notify the Examiner of this decision, so that the present application can receive further processing in due course.

Telephone inquiries regarding *this decision* should be directed to the undersigned at (571) 272-3225.[8] All other inquiries concerning examination procedures or status of the application should be directed to the Technology Center.

/Paul Shanoski/
Paul Shanoski
Senior Attorney
Office of Petitions

8 Petitioner will note that all practice before the Office should be in writing, and the action of the Office will be based exclusively on the written record in the Office. See 37 C.F.R. § 1.2. As such, Petitioner is reminded that no telephone discussion may be controlling or considered authority for Petitioner's further action(s).

UNITED STATES PATENT AND TRADEMARK OFFICE

Commissioner for Patents
United States Patent and Trademark Office
P.O. Box 1450
Alexandria, VA 22313-1450
www.uspto.gov

Lorenzo Vicisano
1070 Grizzly Peak Blvd.
Berkeley, CA 94708

MAILED
AUG 30 2011
OFFICE OF PETITIONS

In re Application of :
Luby, Watson, Vicisano, :
Pakzad, Wang, and Stockhammer :
Application No. 12/887,492 : LETTER
Filed: September 21, 2010 :
Attorney Docket No. 093405U4 :
Title: ENHANCED BLOCK-REQUEST :
STREAMING USING URL TEMPLATES :
AND CONSTRUCTION RULES :

Dear Mr. Vicisano:

You are named a joint inventor in the above-identified United States patent application filed under the provisions of 35 U.S.C. § 116 (United States Code) and 37 C.F.R. § 1.47(a), Rules of Practice in Patent Cases. Should a patent be granted on the application, you will be designated therein as a joint inventor.

As a named inventor you are entitled to inspect any paper in the file wrapper of the application, order copies of all or any part thereof (at a prepaid cost per 37 C.F.R. § 1.19) or make your position of record in the application. Alternatively, you may arrange to do any of the preceding through a registered patent attorney or agent presenting written authorization from you. If you care to join the application, the attorney of record below would presumably assist you. Joining in the application would entail the filing of an appropriate oath or declaration by you pursuant to 37 C.F.R. § 1.63.

Telephone inquiries regarding this communication should be directed to the undersigned at (571) 272-3225. Requests for information regarding your application should be

directed to the File Information Unit at (703) 308-2733. Information regarding how to pay for and order a copy of the application, or a specific paper in the application, should be directed to the Certification Division at (571) 272-3150 or 1-800-972-6382 (outside the Washington D.C. area).

/Paul Shanoski/
Paul Shanoski
Senior Attorney
Office of Petitions

cc: QUALCOMM INCORPORATED
5775 MOREHOUSE DR.
SAN DIEGO CA 92121

UNITED STATES PATENT AND TRADEMARK OFFICE

COMMISSIONER FOR PATENTS
UNITED STATES PATENT AND TRADEMARK OFFICE
P.O. BOX 1450
ALEXANDRIA, VA 22313-1450
WWW.USPTO.GOV

Paper No.

QUALCOMM INCORPORATED
5775 MOREHOUSE DR.
SAN DIEGO CA 92121

MAILED
JUN 21 2011
OFFICE OF PETITIONS

In re Application of :
Luby, Wang, Watson, Vicisano, :
and Pakzad :
Application No. 12/887,495 : DECISION ON PETITION
Filed: September 21, 2010 : PURSUANT TO
Attorney Docket No. 093405U5 : 37 C.F.R. § 1.47(A)
Title: ENHANCED BLOCK-REQUEST :
STREAMING USING COOPERATIVE :
PARALLEL HTTP AND FORWARD ERROR :
CORRECTION :

This is in response to the petition pursuant to 37 C.F.R. § 1.47(a), filed May 12, 2011.[1] A supplement to this petition was received on June 16, 2011.

This petition is **DISMISSED.**

Receipt of the concurrently submitted replacement drawings is acknowledged.

The above-identified application was filed on September 21, 2010 without an oath or declaration, identifying Luby, Wang, Watson, Vicisano, and Pakzad as joint inventors. On October 12, 2010, a "Notice to File Missing Parts of Nonprovisional Application - Filing Date Granted" was mailed, indicating that, *inter alia*, an executed declaration would be required, along with the surcharge associated with the late filing of the same. The notice set a two-month period for response.

A grantable petition pursuant to 37 C.F.R. § 1.47(a) requires:

(1) the petition fee of $200;
(2) a surcharge of either $65 or $130 if the

1 It is noted that similar petitions have been filed in application numbers 12/887,476, 12/887,483, 12/887,492, and 12/887,495.

petition is not filed at the time of filing the application, as set forth in 37 C.F.R. § 1.16(f);

(3) a statement of the last known address of each non-signing inventor;

(4) either

a) proof that a copy of the entire application (specification, claims, drawings, and the oath or declaration) was sent or given to each non-signing inventor for review and proof that each non-signing inventor refuses to join in the application or

b) proof that each non-signing inventor cannot be found or reached after diligent effort, and;

(5) a declaration which complies with 37 C.F.R. § 1.63.

With this petition, Petitioner has included the petition fee, a declaration that has been executed by each joint inventor save Mr. Vicisano, the surcharge associated with the late submission of a declaration, the last known address of the non-signing inventor,[2] an assertion that the non-signing inventor has refused to execute the declaration,[3] proof that he was provided with a copy of the application,[4] and that no response has been received.[5] Petitioner has further included a five-month extension of time so as to make timely this request.

37 C.F.R. § 1.47(a)(4) requires proof that a complete copy of the application was sent to each of the non-signing inventors. Petitioner has set forth that "the Application"[6] was sent to the non-signing inventor. The Office is construing this language to mean that *a complete copy* of Application No. 12/887,495 was sent to the non-signing inventor. Petitioner must notify the Office if this is not a correct interpretation of the statement contained in this petition.

Requirements (1) - (4) of Rule 1.47(a) have been satisfied. The fifth requirement of Rule 1.47(a) has not been satisfied, as will now be pointed out.

---

2 Unlabeled attachment entitled "Electronic Traffic Request."
3 Petition, page 1 and Golia declaration of facts, page 2.
4 Golia declaration of facts, page 1. See also "Electronic Traffic Request."
5 Petition, paragraph 3 and Kasmedo declaration of facts, page 2.
6 Golia declaration of facts, page 1.

Regarding the fifth requirement of Rule 1.47(a), it is noted that the address for non-signing inventor Vicisano that appears on the Supplemental Application Data Sheet (ADS) that was submitted on June 16, 2011 is not the same address that was given as his last known address:

- the declaration that was included with this petition does not contain an address for the non-signing inventor;
- the ADS which was included on initial deposit lists the non-signing inventor's address as "3195 Kifer Road, Santa Clara, CA, 95051;"
- the "Electronic Traffic Request" lists the non-signing inventor's last known address as 1070 Grizzly Park (emphasis added) Blvd., Berkeley, CA, 94708;[7]
- the Supplemental ADS that was filed on June 16, 2011 "Electronic Traffic Request" lists the non-signing inventor's last known address as 1070 Grizzly Peak (emphasis added) Blvd., Berkeley, CA, 94708.

Presuming that the address to which a copy of the application was sent is the correct address, **Petitioner will need to submit a properly titled and executed supplemental Application Data Sheet that contains the correct address for Mr. Vicisano.**

Any reply must be submitted within **TWO MONTHS** from the mail date of this decision. Extensions of time under 37 C.F.R. § 1.136(a) are permitted. The reply should include a cover letter entitled "Renewed Petition pursuant to 37 C.F.R. § 1.47(a)". This is not a final agency action within the meaning of 5 U.S.C § 704.

Petitioner should note that any statement that appears therein should be made by one having firsthand knowledge of the event. Statements based on hearsay are not normally accepted.

Any response to this decision should indicate in a prominent manner that the attorney handling this matter is Paul Shanoski, and may be submitted by mail,[8] hand-delivery,[9] or facsimile.[10] Registered users of EFS-Web may alternatively submit a response to this decision via EFS-Web.[11]

---

7 On June 14, 2011, the undersigned contacted Petitioner telephonically and informed him of this discrepancy.
8 Mail Stop Petition, Commissioner for Patents, United States Patent and Trademark Office, P.O. Box 1450, Alexandria, VA, 22313-1450.
9 Customer Window, Randolph Building, 401 Dulaney Street, Alexandria, VA, 22314.
10 (571) 273-8300: please note this is a central facsimile number.
11 https://sportal.uspto.gov/authenticate/authenticateuserlocalepf.html

If responding by mail, Petitioner is advised not to place the undersigned's name on the envelope. Only the information that appears in the footnote should be included - adding anything else to the address will delay the delivery of the response to the undersigned.

Telephone inquiries regarding *this decision* should be directed to the undersigned at (571) 272-3225.[12] All other inquiries concerning examination procedures should be directed to the Technology Center.

/Paul Shanoski/
Paul Shanoski
Senior Attorney
Office of Petitions

12 Petitioner will note that all practice before the Office should be in writing, and the action of the Office will be based exclusively on the written record in the Office. See 37 C.F.R. § 1.2. As such, Petitioner is reminded that no telephone discussion may be controlling or considered authority for any further action(s) of Petitioner.

UNITED STATES PATENT AND TRADEMARK OFFICE

COMMISSIONER FOR PATENTS
UNITED STATES PATENT AND TRADEMARK OFFICE
P.O. BOX 1450
ALEXANDRIA, VA 22313-1450
WWW.USPTO.GOV

Paper No.

QUALCOMM INCORPORATED
5775 MOREHOUSE DR.
SAN DIEGO CA 92121

MAILED
AUG 30 2011
OFFICE OF PETITIONS

In re Application of :
Luby, Wang, Watson, Vicisano, :
and Pakzad :
Application No. 12/887,495 : DECISION ON RENEWED PETITION
Filed: September 21, 2010 : PURSUANT TO
Attorney Docket No. 093405U5 : 37 C.F.R. § 1.47(A)
Title: ENHANCED BLOCK-REQUEST :
STREAMING USING COOPERATIVE :
PARALLEL HTTP AND FORWARD ERROR :
CORRECTION :

This is in response to the renewed petition pursuant to 37 C.F.R. § 1.47(a), filed August 22, 2011.[1]

This renewed petition is **GRANTED.**

Receipt of the concurrently submitted Supplemental Application Data Sheet (ADS) is acknowledged.

The above-identified application was filed on September 21, 2010 without an oath or declaration, identifying Luby, Wang, Watson, Vicisano, and Pakzad as joint inventors. On October 12, 2010, a "Notice to File Missing Parts of Nonprovisional Application - Filing Date Granted" was mailed, indicating that, *inter alia*, an executed declaration would be required, along with the surcharge associated with the late filing of the same. The notice set a two-month period for response.

A grantable petition pursuant to 37 C.F.R. § 1.47(a) requires:

(1) the petition fee of $200;
(2) a surcharge of either $65 or $130 if the petition is not filed at the time of filing

1 It is noted that August 21, 2011 fell on a Sunday.

the application, as set forth in 37 C.F.R. § 1.16(f);
(3) a statement of the last known address of each non-signing inventor;
(4) either
a) proof that a copy of the entire application (specification, claims, drawings, and the oath or declaration) was sent or given to each non-signing inventor for review and proof that each non-signing inventor refuses to join in the application or
b) proof that each non-signing inventor cannot be found or reached after diligent effort, and;
(5) a declaration which complies with 37 C.F.R. § 1.63.

An original petition pursuant to 37 C.F.R. § 1.47(a) was filed on May 12, 2011 and supplemented on June 16, 2011. Petitioner included the petition fee, a declaration that has been executed by each joint inventor save Mr. Vicisano, the surcharge associated with the late submission of the petition, the last known address of the non-signing inventor,[2] an assertion that the non-signing inventor has refused to execute the declaration,[3] and proof that he was provided with a copy of the application[4] and that no response has been received.[5] Petitioner further included a five-month extension of time so as to make timely this request.[6] The $200 petition fee was charged to Deposit Account No. 17-0026 on June 16, 2011.

The original petition was dismissed via the mailing of a decision on June 21, 2011, which indicated that requirements (1) - (4) of Rule 1.47(a) have been satisfied.

With this renewed petition, Petitioner has indicated that although the package that was mailed to the non-signing inventor was addressed to "1070 Grizzly Park (emphasis added) Blvd., Berkeley, CA, 94708," Petitioner has received confirmation that the package was delivered to Mr. Vicisano's last known address (1070 Grizzly Peak (emphasis added) Blvd., Berkeley, CA, 94708."[7]

---

2 Unlabeled attachment entitled "Electronic Traffic Request."
3 Petition, page 1 and Golia declaration of facts, page 2.
4 Golia declaration of facts, page 1. See also "Electronic Traffic Request."
5 Petition, paragraph 3 and Kasmedo declaration of facts, page 2.
6 It is noted that May 8, 2011 fell on a Sunday.
7 Golia declaration of facts provided with this renewed petition, page 2.

Petitioner has also included the $200 petition fee with this renewed petition. This duplicate payment will be refunded to Deposit Account No. 17-0026 in due course.

It follows that the fifth requirement of Rule 1.47(a) has been satisfied.

Each of the five requirements of 37 C.F.R. § 1.47(a) has been satisfied. This application is hereby accorded Rule 1.47(a) status. As provided in Rule 1.47, this Office will forward notice of this application's filing to the non-signing inventor at the address given in the Supplemental ADS that was submitted concurrently with this petition. Notice of the filing of this application will also be published in the Official Gazette.

The Technology Center will be notified of this decision, and jurisdiction over this application is transferred to the Technology Center, so that the application may receive further processing. The Technology Center's support staff will notify the Examiner of this decision, so that the present application can receive further processing in due course.

Telephone inquiries regarding *this decision* should be directed to the undersigned at (571) 272-3225.[8] All other inquiries concerning examination procedures or status of the application should be directed to the Technology Center.

/Paul Shanoski/
Paul Shanoski
Senior Attorney
Office of Petitions

---

8 Petitioner will note that all practice before the Office should be in writing, and the action of the Office will be based exclusively on the written record in the Office. See 37 C.F.R. § 1.2. As such, Petitioner is reminded that no telephone discussion may be controlling or considered authority for Petitioner's further action(s).

UNITED STATES PATENT AND TRADEMARK OFFICE

Commissioner for Patents
United States Patent and Trademark Office
P.O. Box 1450
Alexandria, VA 22313-1450
www.uspto.gov

Lorenzo Vicisano
1070 Grizzly Peak Blvd.
Berkeley, CA 94708

MAILED
AUG 30 2011
OFFICE OF PETITIONS

In re Application of :
Luby, Wang, Watson, :
Vicisano, and Pakzad :
Application No. 12/887,495 : LETTER
Filed: September 21, 2010 :
Attorney Docket No. 093405U5 :
Title: ENHANCED BLOCK- :
REQUEST STREAMING USING :
COOPERATIVE PARALLEL HTTP :
AND FORWARD ERROR CORRECTION :

Dear Mr. Vicisano:

You are named a joint inventor in the above-identified United States patent application filed under the provisions of 35 U.S.C. § 116 (United States Code) and 37 C.F.R. § 1.47(a), Rules of Practice in Patent Cases. Should a patent be granted on the application, you will be designated therein as a joint inventor.

As a named inventor you are entitled to inspect any paper in the file wrapper of the application, order copies of all or any part thereof (at a prepaid cost per 37 C.F.R. § 1.19) or make your position of record in the application. Alternatively, you may arrange to do any of the preceding through a registered patent attorney or agent presenting written authorization from you. If you care to join the application, the attorney of record below would presumably assist you. Joining in the application would entail the filing of an appropriate oath or declaration by you pursuant to 37 C.F.R. § 1.63.

Telephone inquiries regarding this communication should be directed to the undersigned at (571) 272-3225. Requests

for information regarding your application should be directed to the File Information Unit at (703) 308-2733. Information regarding how to pay for and order a copy of the application, or a specific paper in the application, should be directed to the Certification Division at (571) 272-3150 or 1-800-972-6382 (outside the Washington D.C. area).

/Paul Shanoski/
Paul Shanoski
Senior Attorney
Office of Petitions

cc: QUALCOMM INCORPORATED
5775 MOREHOUSE DR.
SAN DIEGO CA 92121

UNITED STATES PATENT AND TRADEMARK OFFICE

Commissioner for Patents
United States Patent and Trademark Office
P.O. Box 1450
Alexandria, VA 22313-1450
www.uspto.gov

COLOPLAST A/S
ATTENTION: CORPORATE PATENTS
HOLTEDAM 1
DK-3050 HUMLEBAEK DK DENMARK

MAILED
FEB 14 2012
OFFICE OF PETITIONS

In re Application of
Randy L. MORNINGSTAR
Application No.: 12/887,513
Filed: September 22, 2010
Attorney Docket No.: 2009072-US2
For: PENILE PROSTHETIC WITH ANTI-AUTOINFLATION MECHANISM

: REQUEST TO
: PARTICIPATE IN THE PATENT
: PROSECUTION HIGHWAY
: PROGRAM AND PETITION
: TO MAKE SPECIAL UNDER
: 37 CFR 1.102(a)

This is a decision on the request to participate in the Patent Prosecution Highway (PPH) program and the petition under 37 CFR 1.102(a), filed October 27, 2011, to make the above-identified application special.

The request and petition are **GRANTED.**

Discussion

A grantable request to participate in the PPH pilot program and petition to make special require:

1. The U.S. application is
    a. a Paris Convention application which either
        i. validly claims priority under 35 U.S.C. 119(a) and 37 CFR 1.55 to one or more applications filed in the DKPTO, or
        ii. validly claims priority to a PCT application that contains no priority claims, or
    b. a national stage application under the PCT (an application which entered the national stage in the U.S. from a PCT international application after compliance with 35 U.S.C. 371), which PCT application
        i. validly claims priority to an application filed in the DKPTO, or
        ii. validly claims priority to a PCT application that contains no priority claims, or
        iii. contains no priority claim, or
    c. a so-called bypass application filed under 35 U.S.C. 111(a) which validly claims benefit under 35 U.S.C. 120 to a PCT application, which PCT application
        i. validly claims priority to an application filed in the DKPTO, or
        ii. validly claims priority to a PCT application that contains no priority claims, or
        iii. contains no priority claim;
2. Applicant must submit a copy of:
    a. The allowable/patentable claim(s) from the DKPTO application(s);
    b. An English translation of the allowable/patentable claim(s) and

c. A statement that the English translation is accurate;

3. Applicant must:
   a. Ensure all the claims in the U.S. application must sufficiently correspond or be amended to sufficiently correspond to the allowable/patentable claim(s) in the DKPTO application(s) and
   b. Submit a claims correspondence table in English;
4. Examination of the U.S. application has not begun;
5. Applicant must submit:
   a. Documentation of prior office action:
      i. a copy of the office action(s) just prior to the "Decision to Grant a Patent" from each of the DKPTO application(s) containing the allowable/patentable claim(s) or
      ii. if the allowable/patentable claims(s) are from a "Notification of Reasons for Refusal" then the Notification of Reasons for Refusal or
      iii. if the DKPTO application is a first action allowance then no office action from the DKPTO is necessary should be indicated on the request/petition form;
   b. An English language translation of the DKPTO Office action from (5)(a)(i)-(ii) above
   c. A statement that the English translation is accurate;
6. Applicant must submit:
   a. An IDS listing the documents cited by the DKPTO examiner in the DKPTO office action (unless already submitted in this application)
   b. Copies of the documents except U.S. patents or U.S. patent application publications (unless already submitted in this application);

The request to participate in the PPH pilot program and petition comply with the above requirements. Accordingly, the above-identified application has been accorded "special" status.

Inquiries concerning this decision should be directed to Michelle R. Eason at 571-272-4231.

All other inquiries concerning the examination or status of the application is accessible in the PAIR system at http://www.uspto.gov/ebc.index.html.

This application will be forwarded to the examiner for action on the merits commensurate with this decision.

Thurman K. Page
Petitions Examiner
Office of Petitions

UNITED STATES PATENT AND TRADEMARK OFFICE

UNITED STATES DEPARTMENT OF COMMERCE
United States Patent and Trademark Office
Address: COMMISSIONER FOR PATENTS
P.O. Box 1450
Alexandria, Virginia 22313-1450
www.uspto.gov

APPLICATION NO.	FILING DATE	FIRST NAMED INVENTOR	ATTORNEY DOCKET NO.	CONFIRMATION NO.
12/887,549	09/22/2010	Takashi Watanabe	367557US2SRD CONT	2723

7590 04/04/2012

OBLON, SPIVAK, MCCLELLAND MAIER & NEUSTADT, L.L.P.
1940 DUKE STREET
ALEXANDRIA, VA 22314

EXAMINER	
KELLEY, CHRISTOPHER S	

ART UNIT	PAPER NUMBER
2482	

NOTIFICATION DATE	DELIVERY MODE
04/04/2012	ELECTRONIC

DECISION GRANTING PETITION UNDER 37 CFR 1.138(d)

The declaration of express abandonment is recognized

This is in response to the petition under 37 CFR 1.138(d), requesting for a refund of any previously paid search fee and excess claims fee in the above-identified application.

The petition is granted.

The express abandonment is recognized. Any previously paid search fee and excess claims fee are hereby refunded.

Telephone inquiries should be directed to the Office of Data Management at (571) 272-4200.

Betty Powell

Patent Publication Branch
Office of Data Management

UNITED STATES PATENT AND TRADEMARK OFFICE

UNITED STATES DEPARTMENT OF COMMERCE
United States Patent and Trademark Office
Address: COMMISSIONER FOR PATENTS
P.O. Box 1450
Alexandria, Virginia 22313-1450
www.uspto.gov

APPLICATION NO.	FILING DATE	FIRST NAMED INVENTOR	ATTORNEY DOCKET NO.	CONFIRMATION NO.
12/887,563	09/22/2010	Joon-hyuk RYU	Q116606	2744

7590 07/18/2011

SUGHRUE MION, PLLC
2100 PENNSYLVANIA AVENUE, N.W.
SUITE 800
WASHINGTON, DC 20037

EXAMINER	
KOENIG, ANDREW Y	
ART UNIT	**PAPER NUMBER**
2423	
NOTIFICATION DATE	**DELIVERY MODE**
07/18/2011	ELECTRONIC

DECISION GRANTING PETITION UNDER 37 CFR 1.138(d)

The declaration of express abandonment is recognized

This is in response to the petition under 37 CFR 1.138(d), requesting for a refund of any previously paid search fee and excess claims fee in the above-identified application.

The petition is granted.

The express abandonment is recognized. Any previously paid search fee and excess claims fee are hereby refunded.

Telephone inquiries should be directed to the Office of Data Management at (571) 272-4200.

Patent Publication Branch
Office of Data Management

UNITED STATES PATENT AND TRADEMARK OFFICE

Commissioner for Patents
United States Patent and Trademark Office
P.O. Box 1450
Alexandria, VA 22313-1450
www.uspto.gov

In re Application of
Robert L. Hirsch

Application No. 12887589

Filed:

Attorney Docket No. 17/9

:DECISION ON PETITION TO MAKE SPECIAL
:UNDER 37 CFR 1.102(c)(1)

This is a decision on the electronic petition under 37 CFR 1.102 (c)(1), filed 27-SEP-2010 to make the above-identified application special based on applicant's age as set forth in MPEP § 708.02, Section IV.

The petition is **GRANTED**.

A grantable petition to make an application special under 37 CFR 1.102(c)(1), MPEP § 708.02, Section IV: Applicant's Age must include a statement by applicant or a registered practitioner having evidence that applicant is at least 65 years of age. No fee is required.

Accordingly, the above-identified application has been accorded "special" status and will be taken up for action by the examiner upon the completion of all pre-examination processing.

Telephone inquiries concerning this electronic decision should be directed to the Electronic Business Center at 866-217-9197.

All other inquiries concerning either the examination or status of the application should be directed to the Technology Center.

UNITED STATES PATENT AND TRADEMARK OFFICE

Commissioner for Patents
United States Patent and Trademark Office
P.O. Box 1450
Alexandria, VA 22313-1450
www.uspto.gov

In re Application of
David C. Orlowski

Application No. 12887622

Filed:

Attorney Docket No. USPA-0232

:
:
:DECISION ON PETITION TO MAKE SPECIAL
:UNDER 37 CFR 1.102(c)(1)
:

This is a decision on the electronic petition under 37 CFR 1.102 (c)(1), filed 22-SEP-2010 to make the above-identified application special based on applicant's age as set forth in MPEP § 708.02, Section IV.

The petition is **GRANTED**.

A grantable petition to make an application special under 37 CFR 1.102(c)(1), MPEP § 708.02, Section IV: Applicant's Age must include a statement by applicant or a registered practitioner having evidence that applicant is at least 65 years of age. No fee is required.

Accordingly, the above-identified application has been accorded "special" status and will be taken up for action by the examiner upon the completion of all pre-examination processing.

Telephone inquiries concerning this electronic decision should be directed to the Electronic Business Center at 866-217-9197.

All other inquiries concerning either the examination or status of the application should be directed to the Technology Center.

UNITED STATES PATENT AND TRADEMARK OFFICE

Commissioner for Patents
United States Patent and Trademark Office
P.O. Box 1450
Alexandria, VA 22313-1450
www.uspto.gov

MAIL

DEC 08 2010

DIRECTOR'S OFFICE
TECHNOLOGY CENTER 2600

KELLY LOWRY & KELLEY, LLP
6320 CANOGA AVENUE
SUITE 1650
WOODLAND HILLS CA 91367

In re Application of:
STEVENSON, ROBERT A., et al.
Serial No.: 12/887,720
Filed: September 3, 2010

Title: **MINIATURE HERMETICALLY SEALED RFID MICROELECTRONIC CHIP CONNECTED TO A BIOCOMPATIBLE RFID ANTENNA FOR USE IN CONJUNCTION WITH AN AIMD**

DECISION ON PETITION TO MAKE SPECIAL FOR NEW APPLICATION UNDER 37 C.F.R. § 1.102 & M.P.E.P. § 708.02

This is a decision on the petition filed on September 22, 2010 to make the above-identified application special for accelerated examination procedure under 37 C.F.R. § 1.102(d).

The petition to make the application special is **DISMISSED**.

REGULATION AND PRACTICE

A grantable petition to make special under 37 C.F.R. § 1.102(d) and pursuant to the "Change to Practice for Petitions in Patent Applications to Make Special and for Accelerated Examination" published in the Federal Register on June 26, 2006 (71 Fed. Reg. 36323), must satisfy the following conditions:

I. Conditions Regarding the Application:

1. the application must be a non-reissue utility or design application filed under 37 CFR 1.111(a);

2. the application, the petition and the required fees must be filed electronically using the USPTO's electronic filing system (EFS), or EFS-web; if not filed electronically, a statement asserting that EFS and EFS-web were not available during the normal business hours.

3. at the time of filing, the application must be complete under 37 CFR 1.51 and in condition for examination;

4. the application must contain three or fewer independent claims and twenty or fewer total claims and the claims must be directed to a single invention.

II. Conditions Regarding the Petition:

The petition must:

1. be filed with the application;

2. include a statement that applicant agrees not to separately argue the patentability of any independent claim during any appeal in the application;

3. include a statement that applicant agrees to make an election without traverse in a telephone interview.

4. include a statement that applicant agrees to conduct such an interview when requested by the examiner.

5. include a statement, made based on a good faith belief, that a preexamination search in compliance with the following requirements, was conducted, including an identification of the filed of search by United States class and subclass, where applicable, and for database searches, the search logic or chemical structure or sequence used as a query, the name of the file(s) searched and the database service, and the date of the search.

The preexamination search must:

5.1 involve U.S. patents and patent application publications, foreign patent documents, and non-patent literature, unless the applicant can justify with reasonable certainty that no references more pertinent than those already identified are likely to be found in the eliminated sources and includes such a justification with this statement;

5.2. be directed to the claimed invention and encompass all of the features of the claims, giving the claims the broadest reasonable interpretation;

5.3. encompass the disclosed features that may be claimed.

6. must provide in support of the petition an accelerated examination support document. An accelerated examination support document must include:

6.1. an information disclosure statement (IDS) in compliance with 37 CFR 1.98 citing each reference deemed most closely related to the subject matter of each of the claims;

6.2. an identification of all the limitations in the claims that are disclosed by the reference specifying where the limitation is disclosed in the cited reference;

6.3. a detailed explanation of how each of the claims are patentable over the references cited with particularity required by 37 CFR 1.111(b) and (c);

6.4. a concise statement of the utility of the invention as defined in each of the independent claims (unless the application is a design application);

6.5. a showing of where each limitation of the claims finds support under 35 USC 112, first paragraph, in the written description of the specification. If applicable, the showing must also identify: (1) each means- (or step) plus-function claim element that invokes consideration under 35 USC 112, sixth paragraph; and (2) the structure, material, or acts in the specification that corresponds to each means- (or step) plus-function claim element that invokes consideration under 35 USC 112, sixth paragraph; if the application claims the benefit of one or more applications under title 35, United States Code, the showing must also include where each limitation of the claims finds support under 35 USC 112, first paragraph, in each such application in which such supports exists;

6.6. an identification of any cited references that may be disqualified under 35 USC 103(c).

REVIEW OF FACTS

The conditions set forth under section I. above are considered to have been met. However, the petition fails to comply with conditions set forth under section II items 5.2, 5.3.

For these reasons cited above, the petition fails to meet the required conditions to be accorded special status under the accelerated examination procedure.

Regarding the requirement in item 5.2 and 5.3 above, the preexamination search document provided with the instant petition is deficient as follows: The US field of search which is to be provided under section 8(A) is not sufficient. In addition to the search areas provided, applicant would also need to search in the following class/ subclasses: 340/572.1-572.9; 340/10.1-10.6; 235/375-385 as well as subclasses in classes 600 and 604 which pertain to implants or implantable devices.

If any request for reconsideration is filed, an updated preexamination search must be conducted as per items 5.2 and 5.3 above, and the Preexamination Search Document must be amended to indicate such; a new Information Disclosure Statement should be filed to cite any newly found prior art, and the Accelerated Examination Support Document must also be amended to include the necessary reference and discussion of any newly found and cited prior art in accordance with all of items 6 through 6.6 above; as well as the necessary updated discussion of patentability for each of the dependent claims (or a statement that claims stand or fall together) as set forth above.

DECISION

For the above-stated reasons, the petition is **dismissed**. The application will therefore be taken up by the examiner for action in its regular turn.

Petitioner is given a single opportunity to perfect the petition. Any request for reconsideration of this decision must be submitted within 1 (one) month or 30 (thirty) days, whichever is longer, (no extension of time under 37 CFR 1.136(a)) from the date of this decision in order to be considered timely. Any request for reconsideration must address the deficiencies indicated above.

Petitioner is reminded that, upon granting of the special status of the application on request for reconsideration, the application will be processed expeditiously. However, due to the dismissal of the instant petition, examination may not be completed within twelve months of the filing date of the application.

Any inquiry regarding this decision should be directed to Ken Wieder, Quality Assurance Specialist, at (571) 272-2986.

Kenneth A. Wieder
Quality Assurance Specialist
Technology Center 2600
Communications

UNITED STATES PATENT AND TRADEMARK OFFICE

UNITED STATES DEPARTMENT OF COMMERCE
United States Patent and Trademark Office
Address: COMMISSIONER FOR PATENTS
P.O. Box 1450
Alexandria, Virginia 22313-1450
www.uspto.gov

APPLICATION NO.	FILING DATE	FIRST NAMED INVENTOR	ATTORNEY DOCKET NO.	CONFIRMATION NO.
12/887,793	09/22/2010	Ahmet Erbil	21816-74398	3177

24728 7590 02/08/2011
MORRIS MANNING MARTIN LLP
3343 PEACHTREE ROAD, NE
1600 ATLANTA FINANCIAL CENTER
ATLANTA, GA 30326

EXAMINER	
TAMAI, KARL I	

ART UNIT	PAPER NUMBER
2834	

NOTIFICATION DATE	DELIVERY MODE
02/08/2011	ELECTRONIC

Please find below and/or attached an Office communication concerning this application or proceeding.

The time period for reply, if any, is set in the attached communication.

Notice of the Office communication was sent electronically on above-indicated "Notification Date" to the following e-mail address(es):

jxs@mmmlaw.com
ipdocket@mmmlaw.com
ppz@mmmlaw.com

UNITED STATES PATENT AND TRADEMARK OFFICE

Commissioner for Patents
United States Patent and Trademark Office
P.O. Box 1450
Alexandria, VA 22313-1450
www.uspto.gov

MORRIS MANNING MARTIN LLP
3343 PEACHTREE ROAD, NE
1600 ATLANTA FINANCIAL CENTER
ATLANTA GA 30326

In re Application of: ERBIL et al. Serial No.: 12/887,793 Filed: September 22, 2010 Title: APPARATUS AND METHOD FOR FERROELECTRIC CONVERSION OF HEAT TO ELECTRICAL ENERGY	: : : : : :	DECISION ON PETITION TO MAKE SPECIAL FOR NEW APPLICATION UNDER 37 C.F.R. § 1.102 & M.P.E.P. § 708.2

This is a decision on the petition filed on September 22, 2010 to make the above-identified application special for accelerated examination procedure under 37 C.F.R. § 1.102(d).

The petition to make the application special is **DISMISSED**.

REGULATION AND PRACTICE

A grantable petition to make special under 37 C.F.R. § 1.102(d) and pursuant to the "Change to Practice for Petitions in Patent Applications to Make Special and for Accelerated Examination" published in the Federal Register on June 26, 2006 (71 Fed. Reg. 36323), must satisfy the following conditions:

I. Conditions Regarding the Application:

1. the application must be a non-reissue utility or design application filed under 37 CFR 1.111(a);

2. the application, the petition and the required fees must be filed electronically using the USPTO's electronic filing system (EFS), or EFS-web; if not filed electronically, a statement asserting that EFS and EFS-web were not available during the normal business hours.

3. at the time of filing, the application must be complete under 37 CFR 1.51 and in condition for examination;

4. the application must contain three or fewer independent claims and twenty or fewer total claims and the claims must be directed to a single invention.

II. Conditions Regarding the Petition:

The petition must:

1. be filed with the application;

2. include a statement that applicant agrees not to separately argue the patentability of any dependent claim during any appeal in the application;

3. include a statement that applicant agrees to make an election without traverse in a telephone interview;

4. include a statement that applicant agrees to conduct such an interview when requested by the examiner; and

5. include a statement, made based on a good faith belief, that a preexamination search in compliance with the following requirements, was conducted, including an identification of the field of search by United States class and subclass, where applicable, and for database searches, the search logic or chemical structure or sequence used as a query, the name of the file(s) searched and the database service, and the date of the search.

The preexamination search must:

5.1 involve U.S. patents and patent application publications, foreign patent documents, and non-patent literature, unless the applicant can justify with reasonable certainty that no references more pertinent than those already identified are likely to be found in the eliminated sources and includes such a justification with this statement;

5.2. be directed to the claimed invention and encompass all of the features of the claims, giving the claims the broadest reasonable expectation; and

5.3. encompass the disclosed features that may be claimed.

6. must provide in support of the petition an accelerated examination support document. An accelerated examination support document must include:

6.1. an information disclosure statement (IDS) in compliance with 37 CFR 1.98 citing each reference deemed most closely related to the subject matter of each of the claims;

6.2. an identification of all the limitations in the claims that are disclosed by the reference specifying where the limitation is disclosed in the cited reference;

6.3. a detailed explanation of how each of the claims are patentable over the references cited with particularity required by 37 CFR 1.111(b) and (c);

6.4. a concise statement of the utility of the invention as defined in each of the independent claims (unless the application is a design application);

6.5. a showing of where each limitation of the claims finds support under 35 USC 112, first paragraph, in the written description of the specification. If applicable, the showing must also identify: (1) each means- (or step) plus-function claim element that invokes consideration under 35 USC 112, sixth paragraph; and (2) the structure, material, or acts in the specification that corresponds to each means- (or step) plus-function claim element that invokes consideration under 35 USC 112, sixth paragraph; if the application claims the benefit of one or more applications under title 35, United States Code, the showing must also include where each limitation of the claims finds support under 35 USC 112, first paragraph, in each such application in which such supports exists; and

6.6. an identification of any cited references that may be disqualified under 35 USC 103(c).

REVIEW OF FACTS

The conditions regarding the application (section I, subsections 1-4) discussed above are considered to have been met. Additionally, the conditions regarding the petition (section II, subsections 1-4) are considered to have been met. However, the petition fails to comply with the all the conditions set forth in section II, subsections 5 and 6. Therefore, the petition fails to meet the required conditions to be accorded special status under the accelerated examination procedure.

Regarding the requirements of section II, subsection 5.1, it appears the search outlined in the petition omitted critical search areas by not searching in class 290 subclass 1r, class 322 subclasses 2a and 2r, class 333 subclass 193 and class 374 subclass 16 at a minimum to include an electrostatic non-magnetic-type generator, coupling networks using surface acoustic waves and transformation point determination. Any renewed petition should include the above outlined additional searching.

Regarding the requirements of section II, subsection 6.5, the petition is required to provide a showing of where ***each limitation*** (italics added) of the claims finds support under 35 USC 112, first paragraph in the ***written description*** (italics added) of the specification. While the examination support document provides a showing for the current application, as set forth in item 6.5 on page 2 of this decision, "if the application claims the benefit of one or more applications under title 35, United States Code, the showing must also include where each limitation of the claims finds support under 35 USC 112, first paragraph, in each such application in which such supports exists." The current application claims the benefit of parent application under title 35, United States Code 120 to US patent application 12/465,924, as noted on page 1 of the specification, but the examination support document fails to provide a showing of support in this application. For these reasons, the petition does not meet the requirement of section II, subsection 6.5.

DECISION

For the above-stated reasons, the petition is **dismissed**. The application will therefore be taken up by the examiner for action in its regular turn.

Petitioner is given a single opportunity to perfect the petition. Any request for reconsideration of this decision must be submitted within 1 (one) month or 30 (thirty) days, whichever is longer, from the date of this decision in order to be considered timely. Any request for reconsideration must address the deficiencies indicated above.

Petition is reminded that, upon granting of the special status of the application on request for reconsideration, the application will be processed expeditiously. However, due to the dismissal of the instant petition, examination may not be completed within twelve months of the filing date of the application.

Any inquiries regarding this decision should be directed to Quality Assurance Specialist Jose' G. Dees at (571) 272-1569.

Jose' G. Dees, Quality Assurance Specialist
Technology Center 2800
Semiconductors, Electrical and Optical
Systems and Components

UNITED STATES PATENT AND TRADEMARK OFFICE

UNITED STATES DEPARTMENT OF COMMERCE
United States Patent and Trademark Office
Address: COMMISSIONER FOR PATENTS
P.O. Box 1450
Alexandria, Virginia 22313-1450
www.uspto.gov

APPLICATION NO.	FILING DATE	FIRST NAMED INVENTOR	ATTORNEY DOCKET NO.	CONFIRMATION NO.
12/887,793	09/22/2010	Ahmet Erbil	21816-74398	3177

24728 7590 03/08/2011

MORRIS MANNING MARTIN LLP
3343 PEACHTREE ROAD, NE
1600 ATLANTA FINANCIAL CENTER
ATLANTA, GA 30326

EXAMINER	
TAMAI, KARL I	
ART UNIT	**PAPER NUMBER**
2834	

NOTIFICATION DATE	DELIVERY MODE
03/08/2011	ELECTRONIC

Please find below and/or attached an Office communication concerning this application or proceeding.

The time period for reply, if any, is set in the attached communication.

Notice of the Office communication was sent electronically on above-indicated "Notification Date" to the following e-mail address(es):

jxs@mmmlaw.com
ipdocket@mmmlaw.com
ppz@mmmlaw.com

UNITED STATES PATENT AND TRADEMARK OFFICE

Commissioner for Patents
United States Patent and Trademark Office
P.O. Box 1450
Alexandria, VA 22313-1450
www.uspto.gov

MORRIS MANNING MARTIN LLP
3343 PEACHTREE ROAD, NE
1600 ATLANTA FINANCIAL CENTER
ATLANTA GA 30326

In re Application of:
ERBIL et al.
Serial No.: 12/887,793
Filed: September 22, 2010
Title: APPARATUS AND METHOD FOR FERROELECTRIC CONVERSION OF HEAT TO ELECTRICAL ENERGY

DECISION ON PETITION TO MAKE SPECIAL FOR NEW APPLICATION UNDER 37 C.F.R. § 1.102 & M.P.E.P. § 708.02

This is a decision on the request for reconsideration of the petition to make the above-identified application special for accelerated examination procedure under 37 C.F.R. § 1.102(d) filed February 24, 2011. The petition to make special under 37 C.F.R. § 1.102(d) was dismissed on February 8, 2011.

The petition to make the application special is GRANTED.

The application is eligible for accelerated examination and the petition complies with the conditions for granting the application special status pursuant to the "Change to Practice for Petitions in Patent Applications to Make Special and for Accelerated Examination" published June 26, 2006, in the Federal Register. (71 Fed. Reg. 36323).

The prosecution of the instant application will be conducted expeditiously according to the following guidelines.

1. The application will be docketed to an examiner and taken up for action within two weeks of the date of this decision.

2. Restriction Practice:
   If the examiner determines that the claims are not directed to a single invention, a telephone request to elect one single invention will be made pursuant to MPEP 812.01. As a prerequisite to the grant of this petition, the applicant has agreed to make an oral election, by telephone, without traverse. If the applicant refuses to make an election

without traverse, or the examiner cannot reach the applicant after a reasonable effort, the examiner will treat the first claimed invention (invention defined by claim 1) as having being constructively elected without traverse for examination.

3. Office action:
If it is determined that, after appropriate consultation, there is a potential rejection or any other issue to be addressed, the examiner will telephone the applicant and arrange an interview to discuss and resolve the issue. An Office action, other than a Notice of Allowance and Fee(s) Due (Notice of Allowance), will not be issued unless either: 1) an interview was conducted but did not result in agreed to action that places the application in condition for allowance, or, 2) a determination is made that an interview would be unlikely to result in the application being placed in condition for allowance, and 3) an internal conference has been held to review any rejection of any claim.

4. Time for Reply:
An Office action other than a Notice of Allowance or a final Office action will set a shortened statutory period of one month or thirty days, whichever is longer, for reply with no extension of time available under 37 CFR 1.136(a). Failure to timely file a reply within this non-extendible period for reply will result in the abandonment of the application.

5. Reply by Applicant:
A timely reply to an Office action other than the Notice of Allowance must be submitted electronically via EFS or EFS-web and limited to addressing the rejections, objections and requirement made. Any amendment that attempts to: 1) add claims which would result in more than three pending independent claims or more than twenty pending total claims; 2) present claims not encompassed by the pre-examination search or an updated accelerated examination support document; or 3) present claims that are directed a non-elected invention or an invention other than that previously claimed and examined in the application, will be treated as not fully responsive and will not be entered.

For any amendment to the claims (including any new claim) that is not encompassed by the accelerated examination support document, applicant must provide an updated accelerated examination support document that encompasses the amended or new claims at the time of filing of the amendment.

To proceed expeditiously with the examination, it is recommended that a reply with amendments made to any claim or with any new claim being added be accompanied by an updated accelerated examination support document or a statement explaining how the amended or new claim is supported by the original accelerated examination support document.

6. Information Disclosure Statement (IDS):
Any IDS filed during prosecution must be submitted electronically via EFS or EFS-web, accompanied by an updated accelerated examination support document, and be in compliance with 37 CFR 1.97 and 1.98.

7. Post-Allowance Processing:
   To expedite processing of the allowed application into a patent, the applicant must: 1) pay the required fees within one month of the date of the Notice of Allowance, and 2) not file any post allowance papers not required by the Office. In no event may the issue fee be paid and accepted later than three months from the date of the Notice of Allowance.

8. After-Final and Appeal Procedures:
   To expedite prosecution, after receiving the final Office action, applicant must: 1) promptly file a notice of appeal, an appeal brief and appeal fees; and 2) not request a pre-appeal brief conference.

   Any amendment, affidavit or other evidence filed after final Office action must comply with applicable rules and the requirements outlined in numbered paragraphs 5 and 6 above.

   On appeal, the application will proceed according to normal appeal procedures. After appeal, the application will again be treated special.

9. Proceedings Outside the Normal Examination Process:
   If the application becomes involved in a proceeding that is outside the normal examination process (e.g., a secrecy order, national security review, interference proceeding, petitions under 37 CFR 1.181, 182 or 183), the application will be treated special before and after such proceeding.

10. Final Disposition:
    The twelve month goal of this accelerated examination procedure ends with a final disposition. The mailing of a final Office action, a Notice of Allowance, the filing of a Notice of Appeal, or the filing of a Request for Continued Examination (RCE) is the final disposition.

If, during prosecution, a paper is not filed electronically using EFS-web, a reply is filed but is not fully responsive, the application is involved in an appeal, or a proceeding outside normal examination process, the application will still be examined expeditiously, however, the final disposition may occur more than twelve months from the filing of the application.

Any inquiry regarding this decision should be directed to Quality Assurance Specialist Jose' G. Dees at (571) 272-1569.

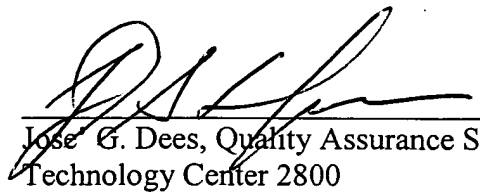

Jose' G. Dees, Quality Assurance Specialist
Technology Center 2800
Semiconductors, Electrical and Optical
Systems and Components

UNITED STATES PATENT AND TRADEMARK OFFICE

UNITED STATES DEPARTMENT OF COMMERCE
United States Patent and Trademark Office
Address: COMMISSIONER FOR PATENTS
P.O. Box 1450
Alexandria, Virginia 22313-1450
www.uspto.gov

APPLICATION NO.	FILING DATE	FIRST NAMED INVENTOR	ATTORNEY DOCKET NO.	CONFIRMATION NO.
12/887,925	09/22/2010	Noriko TANAKA	070456-0304	3426

20277 7590 11/08/2010
MCDERMOTT WILL & EMERY LLP
600 13TH STREET, N.W.
WASHINGTON, DC 20005-3096

EXAMINER	
ART UNIT	PAPER NUMBER
2823	

MAIL DATE	DELIVERY MODE
11/08/2010	PAPER

Please find below and/or attached an Office communication concerning this application or proceeding.

The time period for reply, if any, is set in the attached communication.

UNITED STATES PATENT AND TRADEMARK OFFICE

Commissioner for Patents
United States Patent and Trademark Office
P.O. Box 1450
Alexandria, VA 22313-1450
www.uspto.gov

MCDERMOTT WILL & EMERY LLP
600 13TH STREET, N.W.
WASHINGTON DC 20005-3096

In re Application of
Noriko TANAKA
Application No.: 12/887,925
Filed: 22 September 2010
Attorney Docket No.: 070456-0304
For: GAN CRYSTAL SUBSTRATE AND METHOD OF MANUFACTURING THE SAME, AND METHOD OF MANUFACTURING SEMICONDUCTOR DEVICE

: DECISION ON REQUEST TO
: PARTICIPATE IN THE PATENT
: PROSECUTION HIGHWAY
: PROGRAM AND PETITION
: TO MAKE SPECIAL UNDER
: 37 CFR 1.102(d)

This is a decision on the request to participate in the Patent Prosecution Highway (PPH) program and the petition under 37 CFR 1.102(a), filed 24 September 2010, to make the above-identified application special.

The request and petition are **GRANTED**.

Discussion

A grantable request to participate in the PPH pilot program and petition to make special require:

1. The U.S. application is
    a. a Paris Convention application which either
        i. validly claims priority under 35 U.S.C. 119(a) and 37 CFR 1.55 to one or more applications filed in the JPO, or
        ii. validly claims priority to a PCT application that contains no priority claims, or
    b. a national stage application under the PCT (an application which entered the national stage in the U.S. from a PCT international application after compliance with 35 U.S.C. 371), which PCT application
        i. validly claims priority to an application filed in the JPO, or
        ii. validly claims priority to a PCT application that contains no priority claims, or
        iii. contains no priority claim, or
    c. a so-called bypass application filed under 35 U.S.C. 111(a) which validly claims benefit under 35 U.S.C. 120 to a PCT application, which PCT application
        i. validly claims priority to an application filed in the JPO, or

ii. validly claims priority to a PCT application that contains no priority claims, or
iii. contains no priority claim;

2. Applicant must submit a copy of:
   a. The allowable/patentable claim(s) from the JPO application(s);
   b. An English translation of the allowable/patentable claim(s) and
   c. A statement that the English translation is accurate;
3. Applicant must:
   a. Ensure all the claims in the U.S. application must sufficiently correspond or be amended to sufficiently correspond to the allowable/patentable claim(s) in the JPO application(s) and
   b. Submit a claims correspondence table in English;
4. Examination of the U.S. application has not begun;
5. Applicant must submit:
   a. Documentation of prior office action:
      i. a copy of the office action(s) just prior to the "Decision to Grant a Patent" from each of the JPO application(s) containing the allowable/patentable claim(s) or
      ii. if the allowable/patentable claims(s) are from a "Notification of Reasons for Refusal" then the Notification of Reasons for Refusal or
      iii. if the JPO application is a first action allowance then no office action from the JPO is necessary should be indicated on the request/petition form;
   b. An English language translation of the JPO Office action from (5)(a)(i)-(ii) above
   c. A statement that the English translation is accurate;
6. Applicant must submit:
   a. An IDS listing the documents cited by the JPO examiner in the JPO office action (unless already submitted in this application)
   b. Copies of the documents except U.S. patents or U.S. patent application publications (unless already submitted in this application);

The request to participate in the PPH pilot program and petition comply with the above requirements. Accordingly, the above-identified application has been accorded "special" status.

Inquiries concerning this decision should be directed to Lee W. Young at 571-272-4549.

All other inquiries concerning the examination or status of the application is accessible in the PAIR system at http://www.uspto.gov/ebc.index.html.

This application will be forwarded to the examiner for action on the merits commensurate with this decision.

Lee W. Young
TQAS
Technology Center 2800

UNITED STATES PATENT AND TRADEMARK OFFICE

Commissioner for Patents
United States Patent and Trademark Office
P.O. Box 1450
Alexandria, VA 22313-1450
www.uspto.gov

In re Application of
William Ryle Darnell

Application No. 12887940

Filed:

Attorney Docket No. 1564.012A

:DECISION ON PETITION TO MAKE SPECIAL
:UNDER 37 CFR 1.102(c)(1)

This is a decision on the electronic petition under 37 CFR 1.102 (c)(1), filed 22-SEP-2010 to make the above-identified application special based on applicant's age as set forth in MPEP § 708.02, Section IV.

The petition is **GRANTED**.

A grantable petition to make an application special under 37 CFR 1.102(c)(1), MPEP § 708.02, Section IV: Applicant's Age must include a statement by applicant or a registered practitioner having evidence that applicant is at least 65 years of age. No fee is required.

Accordingly, the above-identified application has been accorded "special" status and will be taken up for action by the examiner upon the completion of all pre-examination processing.

Telephone inquiries concerning this electronic decision should be directed to the Electronic Business Center at 866-217-9197.

All other inquiries concerning either the examination or status of the application should be directed to the Technology Center.

PATENT
Attorney Docket No.: 906RO-015200US

IN THE UNITED STATES PATENT AND TRADEMARK OFFICE

In re application of:	Confirmation No. 3652
Abhay MAHESHWARI et al.	Examiner: Unassigned
Application No.: 12/888,037	Technology Center/Art Unit: 1725
Filed: September 22, 2010	STATEMENTS OF SPECIAL STATUS FOR THE ELIGIBILITY REQUIREMENT FOR PETITION TO MAKE SPECIAL UNDER THE GREEN TECHNOLOGY PILOT PROGRAM
For: SYSTEM AND METHOD FOR LAMINATING PHOTOVOLTAIC STRUCTURES	
Customer No.: 83275	

Commissioner for Patents
P.O. Box 1450
Alexandria, VA 22313-1450

Sir:

Applicants hereby request participation in the Green Technology Pilot Program for the above-identified application, pursuant to 37 C.F.R. 1.102.

The application is a non-reissue, non-provisional utility application filed under 35 USC 111(a). As submitted herewith, the application contains no more than three independent claims, twenty or fewer total claims, and no multiple dependent claims.

The pending claims are directed to a single invention that materially contributes to the discovery or development of renewable energy resources. The pending claims are directed to a laminated photovoltaic structure that is employed in photovoltaic energy sources and a method for forming the laminated photovoltaic structure, the photovoltaic structure being used to convert solar energy into electrical energy.

By filing this petition, Applicants hereby agree to make an election without traverse in a telephonic interview and elect an invention that meets the eligibility requirements for the Green Technology Pilot Programs if the Office determines that the claims are not obviously directed to a single invention. In addition, by filing this petition, Applicants hereby request early

publication under 37 CFR 1.219. The publication fee set forth in 37 CFR 1.18(d) has been submitted with this request.

CONCLUSION

The Commissioner is authorized to charge any deficiency in any fees required under 37 C.F.R. 1.16 and/or 1.17, including extension of time fees, and credit any overpayment to Deposit Account No. 50-4713.

If a telephone conference would expedite prosecution of this application, please telephone the undersigned at 425-348-3500.

Respectfully submitted,

/ Kevin W. Raudebaugh /

Kevin W. Raudebaugh
Reg. No. 65,587

AMPACC Law Group, PLLC
6100 219th Street SW, Suite 580
Mountlake Terrace, WA 98043
Tel: 425-348-3500
Fax: 425-968-9795

Doc Code: PET.GREEN
Document Description: Petition for Green Tech Pilot

PTO/SB/420 (03-11)

PETITION TO MAKE SPECIAL UNDER THE GREEN TECHNOLOGY PILOT PROGRAM

Attorney Docket Number: 906RO-015200US	Application Number (if known): 12/888,037	Filing date: 9/22/2010

First Named Inventor: Abhay MAHESHWARI

Title: SYSTEM AND METHOD FOR LAMINATING PHOTOVOLTAIC STRUCTURES

APPLICANT HEREBY REQUESTS TO PARTICIPATE IN THE GREEN TECHNOLOGY PILOT PROGRAM FOR THE ABOVE-IDENTIFIED APPLICATION. See Instruction Sheet on page 2.

This petition must be timely filed electronically using the USPTO electronic filing system, EFS-Web.

1. By filing this petition:

   Applicant is requesting early publication: Applicant hereby requests early publication under 37 CFR 1.219 and the publication fee set forth in 37 CFR 1.18(d) accompanies this request.

2. By filing this petition: applicant is agreeing to make an election without traverse in a telephonic interview and elect an invention that meets the eligibility requirements for the Green Technology Pilot Program, if the Office determines that the claims are not obviously directed to a single invention. See Instruction Sheet.

3. This request is accompanied by statements of special status for the eligibility requirement.

4. The application contains no more than three (3) independent claims and twenty (20) total claims.

5. The application does not contain any multiple dependent claims.

6. Other attachments: _____

Signature /Kevin W. Raudebaugh/	Date 01/20/2012
Name (Print/Typed) Kevin W. Raudebaugh	Registration Number 65,587

Note: *Signatures of all the inventors or assignees of record of the entire interest or their representative(s) are required in accordance with 37 CFR 1.33 and 11.18. Please see 37 CFR 1.4(d) for the form of the signature. If necessary, submit multiple forms for more than one signature, see below*.*

☐ *Total of 2 forms are submitted.

If you need assistance in completing the form, call 1-800-PTO-9199 and select option 2.

Instruction Sheet for
Petition to Make Special Under the Green Technology Pilot Program

(Not to be Submitted to the USPTO)

The following is a summary of the requirements (for more information see the notices (i) "Pilot Program for Green Technologies Including Greenhouse Gas Reduction," (ii) "Elimination of Classification Requirement in the Green Technology Pilot Program," and (iii) "Expansion and Extension of the Green Technology Pilot Program," available on the USPTO web site at http://www.uspto.gov/patents/init_events/green_tech.jsp):

(1) The application must be a non-reissue, non-provisional utility application filed under 35 U.S.C. 111(a), or an international application that has entered the national stage in compliance with 35 U.S.C. 371, irrespective of the filing date of the application. Reexamination proceedings are excluded from this pilot program.

(2) The application must contain three or fewer independent claims and twenty or fewer total claims. The application must not contain any multiple dependent claims. For an application that contains more than three independent claims or twenty total claims, or multiple dependent claims, applicant must file a preliminary amendment in compliance with 37 CFR 1.121 to cancel the excess claims and/or the multiple dependent claims at the time the petition to make special is filed.

(3) The claims must be directed to a single invention that materially enhances the quality of the environment, or that materially contributes to: (1) the discovery or development of renewable energy resources; (2) the more efficient utilization and conservation of energy resources; or (3) green house gas emission reduction (see the eligibility requirements of sections II and III of the notice (i) cited above). The petition must include a statement that, if the USPTO determines that the claims are directed to multiple inventions (e.g., in a restriction requirement), applicant will agree to make an election without traverse in a telephonic interview, and elect an invention that meets the eligibility requirements in section II or III of the notice (i) cited above.

(4) The petition to make special must be timely filed electronically using the USPTO electronic filing system, EFS-Web, and selecting the document description of "Petition for Green Tech Pilot" on the EFS-Web screen. Applicant should use form PTO/SB/420, which is available as a Portable Document Format (PDF) fillable form in EFS-Web and on the USPTO Web site.

(5) The petition to make special must be filed at least one day prior to the date that a first Office action (which may be an Office action containing only a restriction requirement) appears in the Patent Application Information Retrieval (PAIR) system. Applicant may check the status of the application using PAIR.

(6) The petition to make special must be accompanied by a request for early publication in compliance with 37 CFR 1.219 and the publication fee set forth in 37 CFR 1.18(d).

Privacy Act Statement

The **Privacy Act of 1974 (P.L. 93-579)** requires that you be given certain information in connection with your submission of the attached form related to a patent application or patent. Accordingly, pursuant to the requirements of the Act, please be advised that: (1) the general authority for the collection of this information is 35 U.S.C. 2(b)(2); (2) furnishing of the information solicited is voluntary; and (3) the principal purpose for which the information is used by the U.S. Patent and Trademark Office is to process and/or examine your submission related to a patent application or patent. If you do not furnish the requested information, the U.S. Patent and Trademark Office may not be able to process and/or examine your submission, which may result in termination of proceedings or abandonment of the application or expiration of the patent.

The information provided by you in this form will be subject to the following routine uses:

1. The information on this form will be treated confidentially to the extent allowed under the Freedom of Information Act (5 U.S.C. 552) and the Privacy Act (5 U.S.C 552a). Records from this system of records may be disclosed to the Department of Justice to determine whether disclosure of these records is required by the Freedom of Information Act.
2. A record from this system of records may be disclosed, as a routine use, in the course of presenting evidence to a court, magistrate, or administrative tribunal, including disclosures to opposing counsel in the course of settlement negotiations.
3. A record in this system of records may be disclosed, as a routine use, to a Member of Congress submitting a request involving an individual, to whom the record pertains, when the individual has requested assistance from the Member with respect to the subject matter of the record.
4. A record in this system of records may be disclosed, as a routine use, to a contractor of the Agency having need for the information in order to perform a contract. Recipients of information shall be required to comply with the requirements of the Privacy Act of 1974, as amended, pursuant to 5 U.S.C. 552a(m).
5. A record related to an International Application filed under the Patent Cooperation Treaty in this system of records may be disclosed, as a routine use, to the International Bureau of the World Intellectual Property Organization, pursuant to the Patent Cooperation Treaty.
6. A record in this system of records may be disclosed, as a routine use, to another federal agency for purposes of National Security review (35 U.S.C. 181) and for review pursuant to the Atomic Energy Act (42 U.S.C. 218(c)).
7. A record from this system of records may be disclosed, as a routine use, to the Administrator, General Services, or his/her designee, during an inspection of records conducted by GSA as part of that agency's responsibility to recommend improvements in records management practices and programs, under authority of 44 U.S.C. 2904 and 2906. Such disclosure shall be made in accordance with the GSA regulations governing inspection of records for this purpose, and any other relevant (*i.e.*, GSA or Commerce) directive. Such disclosure shall not be used to make determinations about individuals.
8. A record from this system of records may be disclosed, as a routine use, to the public after either publication of the application pursuant to 35 U.S.C. 122(b) or issuance of a patent pursuant to 35 U.S.C. 151. Further, a record may be disclosed, subject to the limitations of 37 CFR 1.14, as a routine use, to the public if the record was filed in an application which became abandoned or in which the proceedings were terminated and which application is referenced by either a published application, an application open to public inspection or an issued patent.
9. A record from this system of records may be disclosed, as a routine use, to a Federal, State, or local law enforcement agency, if the USPTO becomes aware of a violation or potential violation of law or regulation.

UNITED STATES PATENT AND TRADEMARK OFFICE

UNITED STATES DEPARTMENT OF COMMERCE
United States Patent and Trademark Office
Address: COMMISSIONER FOR PATENTS
P.O. Box 1450
Alexandria, Virginia 22313-1450
www.uspto.gov

APPLICATION NO.	FILING DATE	FIRST NAMED INVENTOR	ATTORNEY DOCKET NO.	CONFIRMATION NO.
12/888,037	09/22/2010	Abhay MAHESHWARI	906RO-015200US	3652

83275 7590 02/02/2012

AMPACC Law Group, PLLC
6100 219th Street SW, Suite 580
Mountlake Terrace, WA 98043

EXAMINER	
ART UNIT	PAPER NUMBER
1725	

NOTIFICATION DATE	DELIVERY MODE
02/02/2012	ELECTRONIC

Please find below and/or attached an Office communication concerning this application or proceeding.

The time period for reply, if any, is set in the attached communication.

Notice of the Office communication was sent electronically on above-indicated "Notification Date" to the following e-mail address(es):

docketing@ampacc.com

UNITED STATES PATENT AND TRADEMARK OFFICE

Commissioner for Patents
United States Patent and Trademark Office
P.O. Box 1450
Alexandria, VA 22313-1450
www.uspto.gov

2/2/12

AMPACC Law Group, PLLC
6100 219th Street SW, Suite 580
Mountlake Terrace WA 98043

In re Application of	:	
Maheshwari et al.	:	DECISION ON PETITION
Application No. 12/888,037	:	TO MAKE SPECIAL UNDER
Filed: 9/22/2010	:	THE GREEN TECHNOLOGY
Attorney Docket No. **906RO-015200US**	:	PILOT PROGRAM

This is a decision on the petition under 37 CFR 1.102, filed 1/20/2012, to make the above-identified application special under the pilot program for applications pertaining to Green Technologies as set forth in 74 Federal Register Notice 64666 (December 8, 2009) and amended by 75 Federal Register Notice 28554 (May 21, 2010) and 75 Federal Register Notice 69049 (November 10, 2010).

The petition is **GRANTED**.

A grantable petition to make an application special under 37 CFR 1.102 and the pilot program as set forth in 74 FR 64666 must be directed to a nonprovisional application filed under 35 USC 111(a) or be a national stage entry under 35 USC 371, exclusive of any reissue applications.

In order to qualify for special status, the following requirements must be met. 1) The application must have no more than 3 independent claims and no more than 20 total claims. 2) The application must not contain any multiple dependent claims. 3) The petition must state the basis for seeking special status, i.e., the claimed invention either: A) materially enhances the quality of the environment or B) materially contributes to: i) the discovery or development of renewable energy resources, ii) the more efficient utilization and conservation of energy resources, or iii) greenhouse gas emission reduction. 4) If the disclosure is not clear on its face that the claimed invention materially contributes under category (A) or (B), the petition must be accompanied by a statement by the applicant, assignee, or an attorney/agent registered to practice before the Office explaining how the materiality standard is met. 5) A statement that applicant will agree to make an election without traverse in a telephonic interview if a restriction requirement is made by the examiner. 6) The petition to make special must be filed electronically. 7) The petition must be filed at least one day prior to the date that a first Office Action appears in the Patent Application Information Retrieval (PAIR) system. 8) The petition must be accompanied by a request for early publication in compliance with 37 CFR 1.219 and include the publication fee as set forth in 37 CFR 1.18(d).

The requirement for a fee for consideration of the petition to make special for applications pertaining to Green Technologies has been waived.

The instant petition complies with items 1 – 8 above. Accordingly, the above-identified application has been accorded "special" status.

Telephone inquires concerning this decision should be directed to Tom Dunn at 571-272-1171.

The application is being forwarded to the Technology Center Art Unit 1725 for action on the merits commensurate with this decision.

/Tom Dunn/

Tom Dunn
Quality Assurance Specialist
Technology Center 1700

UNITED STATES PATENT AND TRADEMARK OFFICE

UNITED STATES DEPARTMENT OF COMMERCE
United States Patent and Trademark Office
Address: COMMISSIONER FOR PATENTS
P.O. Box 1450
Alexandria, Virginia 22313-1450
www.uspto.gov

APPLICATION NO.	FILING DATE	FIRST NAMED INVENTOR	ATTORNEY DOCKET NO.	CONFIRMATION NO.
12/888,049	09/22/2010	Kyle E. Litz	AUTE.6885-NY	3666

5409 7590 11/17/2011

SCHMEISER, OLSEN & WATTS
22 CENTURY HILL DRIVE
SUITE 302
LATHAM, NY 12110

EXAMINER	
BULLOCK, IN SUK C	
ART UNIT	PAPER NUMBER
1772	
MAIL DATE	DELIVERY MODE
11/17/2011	PAPER

Please find below and/or attached an Office communication concerning this application or proceeding.

The time period for reply, if any, is set in the attached communication.

UNITED STATES PATENT AND TRADEMARK OFFICE

Commissioner for Patents
United States Patent and Trademark Office
P.O. Box 1450
Alexandria, VA 22313-1450
www.uspto.gov

11/17/2011

SCHMEISER, OLSEN & WATTS
22 CENTURY HILL DRIVE
SUITE 302
LATHAM NY 12110

In re Application of	:	
Litz et al.	:	DECISION ON PETITION
Application No. 12/888,049	:	TO MAKE SPECIAL UNDER
Filed: 9/22/2010	:	THE GREEN TECHNOLOGY
Attorney Docket No. **AUTE.6885-NY**	:	PILOT PROGRAM

This is a decision on the petition under 37 CFR 1.102, filed 11/9/2011, to make the above-identified application special. It is noted that as of August 25, 2006, the Office revised the procedures for requesting expedited examination based on environmental quality (See Federal register: June 26, 2006; volume 71, number 122; pages 36323-36327). Accordingly, the instant petition will be treated as a request to make the above-identified application special under the pilot program for applications pertaining to Green Technologies as set forth in 74 Federal Register Notice 64666 (December 8, 2009) and amended by 75 Federal Register Notice 28554 (May 21, 2010) and 75 Federal Register Notice 69049 (November 10, 2010).

The petition is **DISMISSED**.

If reconsideration of this decision is desired, a petition for reconsideration must be filed within ONE (1) MONTH OR THIRTY (30) DAYS from the mail date of this decision, whichever is longer. No extension of this time limit can be granted under 37 CFR 1.136(a) or (b). The petition for reconsideration should include an exhaustive attempt to provide the lacking item(s) noted below, since, after a decision on the petition for reconsideration, no further reconsideration or review of the matter will be undertaken by the Director.

A grantable petition to make an application special under 37 CFR 1.102 and the pilot program as set forth in 74 FR 64666 must be directed to a nonprovisional application filed under 35 USC 111(a) or be a national stage entry under 35 USC 371, exclusive of any reissue applications.

In order to qualify for special status, the following requirements must be met. 1) The application must have no more than 3 independent claims and no more than 20 total claims. 2) The application must not contain any multiple dependent claims. 3) The petition must state the basis for seeking special status, i.e., the claimed invention either: A) materially enhances the quality of the environment or B) materially contributes to: i) the discovery or development of renewable

energy resources, ii) the more efficient utilization and conservation of energy resources, or iii) greenhouse gas emission reduction. 4) If the disclosure is not clear on its face that the claimed invention materially contributes under category (A) or (B), the petition must be accompanied by a statement by the applicant, assignee, or an attorney/agent registered to practice before the Office explaining how the materiality standard is met. 5) A statement that applicant will agree to make an election without traverse in a telephonic interview if a restriction requirement is made by the examiner. 6) The petition to make special must be filed electronically. 7) The petition must be filed at least one day prior to the date that a first Office Action appears in the Patent Application Information Retrieval (PAIR) system. 8) The petition must be accompanied by a request for early publication in compliance with 37 CFR 1.219 and include the publication fee as set forth in 37 CFR 1.18(d).

The requirement for a fee for consideration of the petition to make special for applications pertaining to Green Technologies has been waived.

The petition lacks item(s) 1, 5 and 8.

In regard to item 1, petitioner should note that a review of the application claims has been made for the purposes of determining the number of claims contained therein. This application contains more than 3 independent claims and more than 20 total claims. As set forth in the Notice, if the application contains more than 3 independent claims or more than 20 total claims, it will not be eligible to participate in the "Pilot Program for Green Technologies Including Greenhouse Gas Reduction."

In regard to item 5, petitioner should note that a statement has not been provided that states that applicant will agree to make an election without traverse in a telephonic interview if a restriction requirement is made by the examiner as required by the Notice. Accordingly, the petition cannot be granted without such a statement.

In regard to item 8, petitioner should note that since no request in compliance with 37 CFR 1.219 has been made for the early publication of the present application and the publication fee as set forth in 37 CFR 1.18(d) has not been received, the petition is dismissed.

Any reconsideration of this decision should be submitted through the USPTO electronic filing system, EFS-Web, and selecting the document description of "Petition for Green Tech Pilot" on the EFS-Web screen.

Telephone inquiries concerning this decision should be directed to Tom Dunn at 571-272-1171.

The application is being forwarded to the Technology Center Art Unit 1772 for action in its regular turn.

/Tom Dunn/

Tom Dunn
Quality Assurance Specialist
Technology Center 1700

IN THE UNITED STATES PATENT AND TRADEMARK OFFICE

Applicant(s): Kyle E. Litz et al.

Examiner: Bullock, In Suk C

Serial No.: 12/888,049

Group Art Unit: 1772 / Conf. No. 3666

Filed: 9/22/2010

Docket No.: AUTE.6885-NY

Title: **REACTION SYSTEM AND PRODUCTS THEREFROM**

Commissioner for Patents
P.O. Box 1450
Alexandria, VA 22313-1450

PETITION TO MAKE SPECIAL UNDER 37 C.F.R. § 1.102(c)-
REQUEST FOR RECONSIDERATION

Dear Sir:

This is a request for reconsideration of the Decision of Dismissal (hereinafter the "Decision") of the *Petition to Make Special* (hereinafter the "Petition") mailed November 17, 2011. The Petition was filed on November 8, 2011, to advance the above identified patent application out of turn for examination and expedite the prosecution thereof. The Decision sets forth the requirement for qualifying for special status:

1) the application must have no more than 3 independent claims and no more than 20 total claims;
2) the application must not contain any multiple dependent claims;
3) the petition must state the basis for seeking special status; the claimed invention either
    A) materially enhances the quality of the environment or
    B) materially contributes to
        i) the discovery or development of renewable energy resources, ii) the more efficient utilization and conservation of energy resources, or iii) greenhouse gas emission reductionThe basis for this petition under 37 CFR § 1.102(c) is that the claimed invention will materially:

(i) Enhance the quality of the environment; and/or

(ii) Contribute to the development or conservation of energy resources;

4) if the disclosure is not clear on its face that the claimed invention materially contributes under category (A) or (B), the petition must be accompanied by a statement by the applicant, assignee, or an attorney/agent registered to practice before the Office explaining how the materiality standard is met;

5) a statement that applicant will agree to make an election without traverse in a telephonic interview if a restriction requirement is made by the Examiner;

6) the petition to make special must be filed electronically;

7) the petition must be filed at least one day prior to the date a first Office Action appears in the PAIR system; and

8) the petition must be accompanied by a request for early publication in compliance with 37 CFR 1.219 and include the publication fee as set forth in 37 CFR 1.18(d),

The Decision indicates that Applicants lack items 1), 5), and 8); therefore, Applicants have satisfied items 2), 3), 4), 6), and 7). To satisfy items 1) and 8), Applicants attach/submit the following documents to the Office:

1) a copy of a preliminary amendment to be filed concurrently with this request, evidencing the that application contains no more than 3 independent claims, and a total of 20 or less claims; and

2) a copy of a request for early publication under 37 CFR 1.219 to be filed concurrently with this request, including the publication fee as set forth under 37 CFR 1.18(d).

Additionally, to satisfy item 5), Applicants hereby agree to make an election without traverse in a telephonic interview if a restriction requirement is made by the Examiner.

CONCLUSION

Applicants believe that this request for reconsideration and the referenced attachments satisfy all criteria set forth by the Office. Therefore, Applicant respectfully requests reconsideration of the Decision, and that the Office should grant the Petition. Should the Office have any further questions, or requirements, Applicants encourage the personnel handling this matter to contact Applicants representatives listed below. Furthermore, should any fees arise in connection with this request for reconsideration, the Director is authorized to charge Deposit Account No. 19-0513.

Date: December 19, 2011

/Arlen L. Olsen/
Arlen L. Olsen
Registration No. 37,543
Customer No. 5409
Schmeiser, Olsen & Watts
22 Century Hill Drive, Suite 302
Latham, New York 12110
(518) 220-1850

UNITED STATES PATENT AND TRADEMARK OFFICE

UNITED STATES DEPARTMENT OF COMMERCE
United States Patent and Trademark Office
Address: COMMISSIONER FOR PATENTS
P.O. Box 1450
Alexandria, Virginia 22313-1450
www.uspto.gov

APPLICATION NO.	FILING DATE	FIRST NAMED INVENTOR	ATTORNEY DOCKET NO.	CONFIRMATION NO.
12/888,049	09/22/2010	Kyle E. Litz	AUTE.6885-NY	3666

5409 7590 01/06/2012

SCHMEISER, OLSEN & WATTS
22 CENTURY HILL DRIVE
SUITE 302
LATHAM, NY 12110

EXAMINER	
BULLOCK, IN SUK C	
ART UNIT	PAPER NUMBER
1772	
MAIL DATE	DELIVERY MODE
01/06/2012	PAPER

Please find below and/or attached an Office communication concerning this application or proceeding.

The time period for reply, if any, is set in the attached communication.

UNITED STATES PATENT AND TRADEMARK OFFICE

Commissioner for Patents
United States Patent and Trademark Office
P.O. Box 1450
Alexandria, VA 22313-1450
www.uspto.gov

SCHMEISER, OLSEN & WATTS
22 CENTURY HILL DRIVE
SUITE 302
LATHAM NY 12110

JAN 0 6 2012

In re Application of	:	
Litz et al.	:	DECISION ON PETITION
Application No. 12/888,049	:	TO MAKE SPECIAL UNDER
Filed: 9/22/2010	:	THE GREEN TECHNOLOGY
Attorney Docket No. **AUTE.6885-NY**	:	PILOT PROGRAM

This is a decision on the request for reconsideration, filed 12/19/2011, to make the above-identified application special under the pilot program for applications pertaining to Green Technologies as set forth in 74 Federal Register Notice 64666 (December 8, 2009) and amended by 75 Federal Register Notice 28554 (May 21, 2010) and 75 Federal Register Notice 69049 (November 10, 2010).

The petition is **GRANTED**.

A grantable petition to make an application special under 37 CFR 1.102 and the pilot program as set forth in 74 FR 64666 must be directed to a nonprovisional application filed under 35 USC 111(a) or be a national stage entry under 35 USC 371, exclusive of any reissue applications.

In order to qualify for special status, the following requirements must be met. 1) The application must have no more than 3 independent claims and no more than 20 total claims. 2) The application must not contain any multiple dependent claims. 3) The petition must state the basis for seeking special status, i.e., the claimed invention either: A) materially enhances the quality of the environment or B) materially contributes to: i) the discovery or development of renewable energy resources, ii) the more efficient utilization and conservation of energy resources, or iii) greenhouse gas emission reduction. 4) If the disclosure is not clear on its face that the claimed invention materially contributes under category (A) or (B), the petition must be accompanied by a statement by the applicant, assignee, or an attorney/agent registered to practice before the Office explaining how the materiality standard is met. 5) A statement that applicant will agree to make an election without traverse in a telephonic interview if a restriction requirement is made by the examiner. 6) The petition to make special must be filed electronically. 7) The petition must be filed at least one day prior to the date that a first Office Action appears in the Patent Application Information Retrieval (PAIR) system. 8) The petition must be accompanied by a

request for early publication in compliance with 37 CFR 1.219 and include the publication fee as set forth in 37 CFR 1.18(d).

The requirement for a fee for consideration of the petition to make special for applications pertaining to Green Technologies has been waived.

The instant petition complies with items 1 – 8 above. Accordingly, the above-identified application has been accorded "special" status.

Telephone inquires concerning this decision should be directed to Tom Dunn at 571-272-1171.

The application is being forwarded to the Technology Center Art Unit 1772 for action on the merits commensurate with this decision.

/Tom Dunn/

Tom Dunn
Quality Assurance Specialist
Technology Center 1700

Doc Code: PET.GREEN
Document Description: Petition for Green Tech Pilot

PTO/SB/420 (12-09)
Approved for use through 05/31/2010. OMB 0651-0062
U.S. Patent and Trademark Office; U. S. DEPARTMENT OF COMMERCE
Under the Paperwork Reduction Act of 1995, no persons are required to respond to a collection of information unless it displays a valid OMB control number.

PETITION TO MAKE SPECIAL UNDER THE GREEN TECHNOLOGY PILOT PROGRAM

Attorney Docket Number: 54986	Application Number (if known): 12/888,055	Filing date: 9/22/2010
First Named Inventor: Hasnain		
Title: Distributed LED-Based Light Source		

APPLICANT HEREBY REQUESTS TO PARTICIPATE IN THE GREEN TECHNOLOGY PILOT PROGRAM FOR THE ABOVE-IDENTIFIED APPLICATION. See Instruction Sheet on page 2.

This petition must be timely filed electronically using the USPTO electronic filing system, EFS-Web.

1. By filing this petition:

   Applicant is requesting early publication: Applicant hereby requests early publication under 37 CFR 1.219 and the publication fee set forth in 37 CFR 1.18(d) accompanies this request. Applicant hereby rescinds under 37 CFR 1.213(b) any previous filed request that the above-identified application not be published under 35 U.S.C. 122(b).

   If the application has been published, the petition must still be accompanied by the publication fee set forth in 37 CFR 1.18(d) and a statement that the application has been published.

2. By filing this petition: applicant is agreeing to make an election without traverse in a telephonic interview and elect an invention that meets the eligibility requirement and classification requirement set forth in the notice entitled "Pilot Program for Green Technologies Including Greenhouse Gas Reduction" that was published in the Federal Register if the Office determines that the claims are not obviously directed to a single invention.

3. This request is accompanied by statements of special status for the eligibility requirement.

4. The application contains no more than three (3) independent claims and twenty (20) total claims.

5. The application does not contain any multiple dependent claims.

6. Other attachments: _____

Signature	Date November 18, 2010
Name (Print/Typed) Calvin B. Ward	Registration Number 30,896

Note: Signatures of all the inventors or assignees of record of the entire interest or their representative(s) are required in accordance with 37 CFR 1.33 and 11.18. Please see 37 CFR 1.4(d) for the form of the signature. If necessary, submit multiple forms for more than one signature, see below.*

☐ *Total of _____ forms are submitted.

The information is required to obtain or retain a benefit by the public which is to file (and by the USPTO to process) an application. Confidentiality is governed by 35 U.S.C. 122 and 37 CFR 1.11 and 1.14. This collection is estimated to take 12 hours to complete, including gathering, preparing, and submitting the completed application form to the USPTO. Time will vary depending upon the individual case. Any comments on the amount of time you require to complete this form and/or suggestions for reducing this burden, should be sent to the Chief Information Officer, U.S. Patent and Trademark Office, U.S. Department of Commerce, P.O. Box 1450, Alexandria, VA 22313-1450. DO NOT SEND FEES OR COMPLETED FORMS TO THIS ADDRESS. **SEND TO: Commissioner for Patents, P.O. Box 1450, Alexandria, VA 22313-1450.**

If you need assistance in completing the form, call 1-800-PTO-9199 and select option 2.

PATENT APPLICATION
Attorney Docket: 54986

IN THE UNITED STATES PATENT AND TRADEMARK OFFICE

Applicant:	Hasnain, Ghulam	
Serial No.:	12/888,055	
Filed:	9/22/2010	
For:	Distributed LED-Based Light Source	
Group Art Unit:	not yet assigned	Examiner: not yet assigned

STATEMENT OF SPECIAL STATUS

Commissioner for Patents
P.O. Box 1450
Alexandria, VA 22313-1450

Sir:

Applicant submits that the above-identified patent application should be afforded special status under the green technology pilot program as pertaining to energy conservation. Applicant suggests the classification 257/79 as an appropriate classification for this application, as the subject matter of the invention specifically concerns light emitting diode structures, which are not only active solid state devices, as covered by classification 257, but also incoherent light emitters, as covered by sub-classification 79.

Respectfully Submitted,

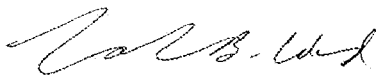

Calvin B. Ward
Registration No. 30,896
Date November 18, 2010

18 Crow Canyon Court, Suite 305
San Ramon, CA 94583
Telephone (925) 855-0413
Telefax (925) 855-9214

UNITED STATES PATENT AND TRADEMARK OFFICE

UNITED STATES DEPARTMENT OF COMMERCE
United States Patent and Trademark Office
Address: COMMISSIONER FOR PATENTS
P.O. Box 1450
Alexandria, Virginia 22313-1450
www.uspto.gov

APPLICATION NO.	FILING DATE	FIRST NAMED INVENTOR	ATTORNEY DOCKET NO.	CONFIRMATION NO.
12/888,055	09/22/2010	Ghulam Hasnain	54986	3675

28241 7590 11/30/2010

THE LAW OFFICES OF CALVIN B. WARD
18 CROW CANYON COURT, SUITE 305
SAN RAMON, CA 94583

EXAMINER	
ART UNIT	PAPER NUMBER
2879	

MAIL DATE	DELIVERY MODE
11/30/2010	PAPER

Please find below and/or attached an Office communication concerning this application or proceeding.

The time period for reply, if any, is set in the attached communication.

UNITED STATES PATENT AND TRADEMARK OFFICE

Commissioner for Patents
United States Patent and Trademark Office
P.O. Box 1450
Alexandria, VA 22313-1450
www.uspto.gov

THE LAW OFFICES OF CALVIN B. WARD
18 CROW CANYON COURT, SUITE 305
SAN RAMON CA 94583

In re Application of	:	
Ghulam HASNAIN	:	DECISION ON PETITION
Application No. 12/888,055	:	TO MAKE SPECIAL UNDER
Filed: September 22, 2010	:	THE GREEN TECHNOLOGY
Attorney Docket No. 54986	:	PILOT PROGRAM

This is a decision on the petition under 37 CFR 1.102, filed on November 18, 2010, to make the above-identified application special under the pilot program for applications pertaining to Green Technologies as set forth 74 Federal Register Notice 64666 (December 8, 2009) and amended by 75 Federal Register Notice 28554 (May 21, 2010) and 75 Federal Register Notice 69049 (November 10, 2010).

The petition is **GRANTED**.

A grantable petition to make an application special under 37 CFR 1.102 and the pilot program as set forth in 74 FR 64666 must be directed to a nonprovisional application filed under 35 USC 111(a) or be a national stage entry under 35 USC 371, exclusive of any reissue applications.

In order to qualify for special status, the following requirements must be met. 1) The application must have no more than 3 independent claims and no more than 20 total claims. 2) The application must not contain any multiple dependent claims. 3) The petition must state the basis for seeking special status, i.e., the claimed invention either: A) materially enhances the quality of the environment or B) materially contributes to: i) the discovery or development of renewable energy resources, ii) the more efficient utilization and conservation of energy resources, or iii) greenhouse gas emission reduction. 4) If the disclosure is not clear on its face that the claimed invention materially contributes under category (A) or (B), the petition must be accompanied by a statement by the applicant, assignee, or an attorney/agent registered to practice before the Office explaining how the materiality standard is met. 5) A statement that applicant will agree to make an election without traverse in a telephonic interview if a restriction requirement is made by the examiner. 6) The petition to make special must be filed electronically. 7) The petition must be filed at least one day prior to the date that a first Office Action appears in the Patent Application Information Retrieval (PAIR) system. 8) The petition must be accompanied by a request for early publication in compliance with 37 CFR 1.219 and include the publication fee as set forth in 37 CFR 1.18(d).

The requirement for a fee for consideration of the petition to make special for applications pertaining to Green Technologies has been waived.

The instant petition complies with items 1 – 8 above. Accordingly, the above-identified application has been accorded "special" status.

Telephone inquires concerning this decision should be directed to Lee W. Young at 571-272-4549.

The application is being forwarded to the Technology Center Art Unit 2879 for action in its regular turn.

Lee W. Young
Quality Assurance Specialist
Technology Center 2800

UNITED STATES PATENT AND TRADEMARK OFFICE

COMMISSIONER FOR PATENTS
UNITED STATES PATENT AND TRADEMARK OFFICE
P.O. BOX 1450
ALEXANDRIA, VA 22313-1450
www.uspto.gov

THE LAW OFFICES OF CALVIN B. WARD
18 CROW CANYON COURT, SUITE 305
SAN RAMON CA 94583

MAILED

DEC 15 2010

OFFICE OF PETITIONS

In re Application of :
HASNAIN, GHULAM :
Application No. 12/888,055 : NOTICE
Filed: 09/22/2010 :
Attorney Docket No. 54986 :

This is a Notice regarding your request for acceptance of a fee deficiency submission under 37 CFR 1.28 filed October 22, 2010.

The Office no longer investigates or rejects original or reissue applications under 37 CFR 1.56. **1098 Off. Gaz. Pat. Office 502 (January 3, 1989)**. Therefore, nothing in this Notice is intended to imply that an investigation was done.

Your fee deficiency submission under 37 CFR 1.28 is hereby **ACCEPTED**.

This application is no longer entitled to small entity status. Accordingly, all future fees paid in this application must be paid at the large entity rate.

This application is being referred to Technology Center Art Unit 2879 for examination in due course.

Inquiries related to this communication should be directed to the undersigned at (571) 272-3211.

C. T. Donnell

Christina Tartera Donnell
Senior Petitions Attorney
Office of Petitions

UNITED STATES PATENT AND TRADEMARK OFFICE

Commissioner for Patents
United States Patent and Trademark Office
P.O. Box 1450
Alexandria, VA 22313-1450
www.uspto.gov

MAIL

APR 01 2011

DIRECTOR'S OFFICE
TECHNOLOGY CENTER 2600

VANTAGE LAW PLLC
P.O. BOX 1305
ISSAQUAH WA 98027

In re Application of:
HENSON, DONALD, et al.
Serial No.: 12/888,107
Filed: September 22, 2010

Title: **DISPLAY FOR HAND-HELD ELECTRONICS**

DECISION ON PETITION TO MAKE SPECIAL FOR NEW APPLICATION UNDER 37 C.F.R. § 1.102 & M.P.E.P. § 708.02

This is a decision on the petition filed on November 19, 2010 to make the above-identified application special for accelerated examination procedure under 37 C.F.R. § 1.102(d).

The petition to make the application special is **DENIED**.

REGULATION AND PRACTICE

To be eligible for accelerated examination under 37 C.F.R. § 1.102(d) and pursuant to the "Change to Practice for Petitions in Patent Applications to Make Special and for Accelerated Examination" published in the Federal Register on June 26, 2006 (71 Fed. Reg. 36323), the following conditions must be satisfied:

1. The application must be a non-reissue utility or design application filed under 37 CFR 1.111(a);
2. The application, the petition and the required fees must be filed electronically using the USPTO's electronic filing system (EFS), or EFS-web; if not filed electronically, a statement asserting that EFS and EFS-web were not available during the normal business hours;
3. The application, at the time of filing, must be complete under 37 CFR 1.51 and in condition for examination;
4. The application must contain three or fewer independent claims and twenty or fewer total claims and the claims must be directed to a single invention.

The application as filed is not eligible for accelerated examination under 37 C.F.R. § 1.102(d) because the application, at the time of filing, is not in compliance with items 2 and 3 above.

The petition was filed November 19, 2010 subsequent to the September 22, 2010 filing date of the application. Additionally, the application was incomplete at the time of filing as evidenced by the Notice to File Missing Parts of Non-provisional Application mailed October 12, 2010.

As a result, the application will be taken up by the examiner for action in its regular turn.

Any inquiry regarding this decision should be directed to Ken Wieder, Quality Assurance Specialist, at (571) 272-2986.

/Kenneth A. Wieder/

Kenneth A. Wieder
Quality Assurance Specialist
Technology Center 2600
Communications

UNITED STATES PATENT AND TRADEMARK OFFICE

Commissioner for Patents
United States Patent and Trademark Office
P.O. Box 1450
Alexandria, VA 22313-1450
www.uspto.gov

THE LAW OFFICES OF CALVIN B. WARD
18 CROW CANYON COURT, SUITE 305
SAN RAMON CA 94583

MAILED

NOV 22 2010

OFFICE OF PETITIONS

In re Application of :
Ghulam Hasain, et al. :
Application No. 12/888,111 : DECISION ON PETITION
Filed: September 22, 2010 : TO MAKE SPECIAL UNDER
Attorney Docket No. 54989 : 37 CFR 1.102(c)(1)
:

This is a decision on the petition under 37 CFR 1.102(c)(1), filed October 29, 2010, to make the above-identified application special based on applicant's age as set forth in M.P.E.P. § 708.02, Section IV.

The petition is **GRANTED**.

A grantable petition to make an application special under 37 CFR 1.102(c)(1) and MPEP § 708.02, Section IV: Applicant's Age must be accompanied by evidence showing that at least one of the applicants is 65 years of age, or more, such as a birth certificate or a statement by applicant. No fee is required

The instant petition includes a statement from the attorney of record declaring that he/she is in possession of evidence, and will retain such in the application file record proving that the applicant, Calvin B. Ward is 65 years of age or older. Accordingly, the above-identified application has been accorded "special" status.

Telephone inquiries concerning this decision should be directed to Terri Johnson at 571-272-2991.

All other inquiries concerning either the examination or status of the application should be directed to the Technology Center.

The application is being forwarded to the Technology Center Art Unit 2821 for action on the merits commensurate with this decision.

/Terri Johnson/
Terri Johnson
Petitions Examiner
Office of Petitions

UNITED STATES PATENT AND TRADEMARK OFFICE

Commissioner for Patents
United States Patent and Trademark Office
P.O. Box 1450
Alexandria, VA 22313-1450
www.uspto.gov

THE LAW OFFICES OF CALVIN B. WARD
18 CROW CANYON COURT, SUITE 305
SAN RAMON CA 94583

MAILED

DEC 02 2010

OFFICE OF PETITIONS

In re Application of :
Hasnain et al. :
Application No. 12/888,111 : NOTICE
Filed: 09/22/2010 :
Attorney Docket No. 54989 :

This is a Notice regarding your request for acceptance of a fee deficiency submission under 37 CFR 1.28 filed October 22, 2010.

The Office no longer investigates or rejects original or reissue applications under 37 CFR 1.56. **1098 Off. Gaz. Pat. Office 502 (January 3, 1989)**. Therefore, nothing in this Notice is intended to imply that an investigation was done.

Your fee deficiency submission under 37 CFR 1.28 is hereby **ACCEPTED**.

This application is no longer entitled to small entity status. Accordingly, all future fees paid in this application must be paid at the large entity rate.

This application is being referred to Technology Center Art Unit 2821 for examination in due course.

Inquiries related to this communication should be directed to the undersigned at (571) 272-3211.

Christina Tartera Donnell

Christina Tartera Donnell
Senior Petitions Attorney
Office of Petitions

UNITED STATES PATENT AND TRADEMARK OFFICE

UNITED STATES DEPARTMENT OF COMMERCE
United States Patent and Trademark Office
Address: COMMISSIONER FOR PATENTS
P.O. Box 1450
Alexandria, Virginia 22313-1450
www.uspto.gov

APPLICATION NO.	FILING DATE	FIRST NAMED INVENTOR	ATTORNEY DOCKET NO.	CONFIRMATION NO.
12/888,120	09/22/2010	Kazumi Sawayanagi	325772062600	3802

25227 7590 11/09/2011

MORRISON & FOERSTER LLP
1650 TYSONS BOULEVARD
SUITE 400
MCLEAN, VA 22102

EXAMINER	
ZIMMERMAN, MARK K	

ART UNIT	PAPER NUMBER
2625	

NOTIFICATION DATE	DELIVERY MODE
11/09/2011	ELECTRONIC

Please find below and/or attached an Office communication concerning this application or proceeding.

The time period for reply, if any, is set in the attached communication.

Notice of the Office communication was sent electronically on above-indicated "Notification Date" to the following e-mail address(es):

EOfficeVA@mofo.com
drcaldwell@mofo.com
PatentDocket@mofo.com

UNITED STATES PATENT AND TRADEMARK OFFICE

Commissioner for Patents
United States Patent and Trademark Office
P.O. Box 1450
Alexandria, VA 22313-1450
www.uspto.gov

MORRISON & FOERSTER LLP
1650 TYSONS BOULEVARD
SUITE 400
MCLEAN VA 22102

In re Application of	
SAWAYANAGI et al.	**: DECISION ON REQUEST TO**
Application No.: 12/888,120	**: PARTICIPATE IN THE PATENT**
Filed: 22 September 2010	**: PROSECUTION HIGHWAY**
Attorney Docket No.: 325772062600	**: PROGRAM AND PETITION**
For: SYSTEM FOR HANDLING	**: TO MAKE SPECIAL UNDER**
IMAGE DATA...	**: 37 CFR 1.102(a)**

This is a decision on the request to participate in the Patent Prosecution Highway (PPH) program and the petition under 37 CFR 1.102(a), filed 25 October 2011, to make the above-identified application special.

The request and petition are **GRANTED**.

Discussion

A grantable request to participate in the PPH pilot program and petition to make special require:

1. The U.S. application is

    a. a Paris Convention application which either
        i. validly claims priority under 35 U.S.C. 119(a) and 37 CFR 1.55 to one or more applications filed in the JPO, or
        ii. validly claims priority to a PCT application that contains no priority claims, or
    b. a national stage application under the PCT (an application which entered the national stage in the U.S. from a PCT international application after compliance with 35 U.S.C. 371), which PCT application
        i. validly claims priority to an application filed in the JPO, or
        ii. validly claims priority to a PCT application that contains no priority claims, or
        iii. contains no priority claim, or
    c. a so-called bypass application filed under 35 U.S.C. 111(a) which validly claims benefit under 35 U.S.C. 120 to a PCT application, which PCT application
        i. validly claims priority to an application filed in the JPO, or
        ii. validly claims priority to a PCT application that contains no priority claims, or

iii. contains no priority claim;

2. Applicant must submit a copy of:
   a. The allowable/patentable claim(s) from the JPO application(s);
   b. An English translation of the allowable/patentable claim(s) and
   c. A statement that the English translation is accurate;
3. Applicant must:
   a. Ensure all the claims in the U.S. application must sufficiently correspond or be amended to sufficiently correspond to the allowable/patentable claim(s) in the JPO application(s) and
   b. Submit a claims correspondence table in English;
4. Examination of the U.S. application has not begun;
5. Applicant must submit:
   a. Documentation of prior office action:
      i. a copy of the office action(s) just prior to the "Decision to Grant a Patent" from each of the JPO application(s) containing the allowable/patentable claim(s) or
      ii. if the allowable/patentable claims(s) are from a "Notification of Reasons for Refusal" then the Notification of Reasons for Refusal or
      iii. if the JPO application is a first action allowance then no office action from the JPO is necessary should be indicated on the request/petition form;
   b. An English language translation of the JPO Office action from (5)(a)(i)-(ii) above
   c. A statement that the English translation is accurate;
6. Applicant must submit:
   a. An IDS listing the documents cited by the JPO examiner in the JPO office action (unless already submitted in this application)
   b. Copies of the documents except U.S. patents or U.S. patent application publications (unless already submitted in this application);

The request to participate in the PPH pilot program and petition comply with the above requirements. Accordingly, the above-identified application has been accorded "special" status.

Inquiries concerning this decision should be directed to Lee W. Young at 571-272-4549.

All other inquiries concerning the examination or status of the application is accessible in the PAIR system at http://www.uspto.gov/ebc.index.html.

This application will be forwarded to the examiner for action on the merits commensurate with this decision once this application's formality reviews have been completed.

Lee W. Young
Quality Assurance Specialist
Technology Center 2600

Doc Code: PPH.PCT.652

Document Description: Petition to make special under PCT-Patent Pros Hwy

PTO/SB/20PCT-KR (06-10)
Approved for use through 01/31/2015. OMB 0651-0058
U.S. Patent and Trademark Office; U.S DEPARTMENT OF COMMERCE

Under the Paperwork Reduction Act of 1995, no persons are required to respond to a collection of information unless it displays a valid OMB control number.

REQUEST FOR PARTICIPATION IN THE PATENT COOPERATION TREATY – PATENT PROSECUTION HIGHWAY (PCT-PPH) PILOT PROGRAM BETWEEN THE KOREAN INTELLECTUAL PROPERTY OFFICE (KIPO) AND THE USPTO

Application No.:	12/888,129	First Named Inventor:	Mark A. Ross
Filing Date:	September 22, 2010	Attorney Docket No.:	K1088.10001US01
Title of the Invention:	BARCODE RENDERING DEVICE		

THIS REQUEST FOR PARTICIPATION IN THE PCT-PPH PILOT PROGRAM ALONG WITH THE REQUIRED DOCUMENTS MUST BE SUBMITTED VIA EFS-WEB. INFORMATION REGARDING EFS-WEB IS AVAILABLE AT HTTP://WWW.USPTO.GOV/EBC/EFS_HELP.HTML.

APPLICANT HEREBY REQUESTS PARTICIPATION IN THE PCT-PPH PILOT PROGRAM AND PETITIONS TO MAKE THE ABOVE-IDENTIFIED APPLICATION SPECIAL UNDER THE PCT-PPH PILOT PROGRAM.

The above-identified application is (1) a national stage entry of the corresponding PCT application, or (2) a national stage entry of another PCT application which claims priority to the corresponding PCT application, or (3) a national application that claims domestic/ foreign priority to the corresponding PCT application, or (4) a national application which forms the basis for the priority claim in the corresponding PCT application, or (5) a continuing application of a U.S. application that satisfies one of (1) to (4) above, or (6) a U.S. application that claims domestic benefit to a U.S. provisional application which forms the basis for the priority claim in the corresponding PCT application.

The corresponding PCT application number(s) is/are: PCT/US2011/052792

The international filing date of the corresponding PCT application(s) is/are: September 22, 2011

I. List of Required Documents:

a. **A copy of the latest international work product (WO/ISA, WO/IPEA, or IPER) in the above-identified corresponding PCT application(s)**

☑ is attached.

☐ is not attached because the document is already in the U.S. application.

b. **A copy of all claims which were indicated as having novelty, inventive step and industrial applicability in the above-identified corresponding PCT application(s)**

☑ is attached.

☐ is not attached because the document is already in the U.S. application.

c. **English translations of the documents in a. and b. above are attached (if the documents are not in the English language). A statement that the English translation is accurate is attached for the document in b. above.**

d. **(1) An information disclosure statement listing the documents cited in the international work products (ISR, WO/ISA, WO/IPEA, IPER) of the corresponding PCT application.**

☑ is attached.

☐ has already been filed in the above-identified U.S. application on _____

(2) Copies of all documents (except for U.S. patents or U.S. patent application publications)

☑ are attached.

☐ have already been filed in the above-identified U.S. application on _____

This collection of information is required by 35 U.S.C. 119, 37 CFR 1.55, and 37 CFR 1.102(d). The information is required to obtain or retain a benefit by the public, which is to file (and by the USPTO to process) an application. Confidentiality is governed by 35 U.S.C. 122 and 37 CFR 1.11 and 1.14. This collection is estimated to take 2 hours to complete, including gathering, preparing, and submitting the completed application form to the USPTO. Time will vary depending upon the individual case. Any comments on the amount of time you require to complete this form and/or suggestions for reducing this burden should be sent to the Chief Information Officer, U.S. Patent and Trademark Office, U.S. Department of Commerce, P.O. Box 1450, Alexandria, VA 22313-1450. DO NOT SEND FEES OR COMPLETED FORMS TO THIS ADDRESS.

PTO/SB/20PCT-KR (06-10)
Approved for use through 01/31/2015. OMB 0651-0058
U.S. Patent and Trademark Office; U.S DEPARTMENT OF COMMERCE
Under the Paperwork Reduction Act of 1995, no persons are required to respond to a collection of information unless it displays a valid OMB control number.

REQUEST FOR PARTICIPATION IN THE PCT-PPH PILOT PROGRAM BETWEEN THE KIPO AND THE USPTO

(continued)

Application No.:	12/888,129	First Named Inventor:	Mark A. Ross

II. Claims Correspondence Table:

Claims in US Application	Patentable Claims in the corresponding PCT application	Explanation regarding the correspondence
1-33	1-33	Substantially identical.

III. All the claims in the US application sufficiently correspond to the patentable claims in the corresponding PCT application.

Signature /R. Burns Israelsen, Reg. #42685/	Date April 17, 2012
Name (Print/Typed) R. Burns Israelsen	Registration Number 42685

Privacy Act Statement

The **Privacy Act of 1974 (P.L. 93-579)** requires that you be given certain information in connection with your submission of the attached form related to a patent application or patent. Accordingly, pursuant to the requirements of the Act, please be advised that: (1) the general authority for the collection of this information is 35 U.S.C. 2(b)(2); (2) furnishing of the information solicited is voluntary; and (3) the principal purpose for which the information is used by the U.S. Patent and Trademark Office is to process and/or examine your submission related to a patent application or patent. If you do not furnish the requested information, the U.S. Patent and Trademark Office may not be able to process and/or examine your submission, which may result in termination of proceedings or abandonment of the application or expiration of the patent.

The information provided by you in this form will be subject to the following routine uses:

1. The information on this form will be treated confidentially to the extent allowed under the Freedom of Information Act (5 U.S.C. 552) and the Privacy Act (5 U.S.C 552a). Records from this system of records may be disclosed to the Department of Justice to determine whether disclosure of these records is required by the Freedom of Information Act.
2. A record from this system of records may be disclosed, as a routine use, in the course of presenting evidence to a court, magistrate, or administrative tribunal, including disclosures to opposing counsel in the course of settlement negotiations.
3. A record in this system of records may be disclosed, as a routine use, to a Member of Congress submitting a request involving an individual, to whom the record pertains, when the individual has requested assistance from the Member with respect to the subject matter of the record.
4. A record in this system of records may be disclosed, as a routine use, to a contractor of the Agency having need for the information in order to perform a contract. Recipients of information shall be required to comply with the requirements of the Privacy Act of 1974, as amended, pursuant to 5 U.S.C. 552a(m).
5. A record related to an International Application filed under the Patent Cooperation Treaty in this system of records may be disclosed, as a routine use, to the International Bureau of the World Intellectual Property Organization, pursuant to the Patent Cooperation Treaty.
6. A record in this system of records may be disclosed, as a routine use, to another federal agency for purposes of National Security review (35 U.S.C. 181) and for review pursuant to the Atomic Energy Act (42 U.S.C. 218(c)).
7. A record from this system of records may be disclosed, as a routine use, to the Administrator, General Services, or his/her designee, during an inspection of records conducted by GSA as part of that agency's responsibility to recommend improvements in records management practices and programs, under authority of 44 U.S.C. 2904 and 2906. Such disclosure shall be made in accordance with the GSA regulations governing inspection of records for this purpose, and any other relevant (*i.e.*, GSA or Commerce) directive. Such disclosure shall not be used to make determinations about individuals.
8. A record from this system of records may be disclosed, as a routine use, to the public after either publication of the application pursuant to 35 U.S.C. 122(b) or issuance of a patent pursuant to 35 U.S.C. 151. Further, a record may be disclosed, subject to the limitations of 37 CFR 1.14, as a routine use, to the public if the record was filed in an application which became abandoned or in which the proceedings were terminated and which application is referenced by either a published application, an application open to public inspection or an issued patent.
9. A record from this system of records may be disclosed, as a routine use, to a Federal, State, or local law enforcement agency, if the USPTO becomes aware of a violation or potential violation of law or regulation.

UNITED STATES PATENT AND TRADEMARK OFFICE

Commissioner for Patents
United States Patent and Trademark Office
P.O. Box 1450
Alexandria, VA 22313-1450
www.uspto.gov

THE LAW OFFICES OF CALVIN B. WARD
18 CROW CANYON COURT, SUITE 305
SAN RAMON CA 94583

MAILED

NOV 30 2010

OFFICE OF PETITIONS

In re Application of	:	
Calvin B. Ward	:	
Application No. 12/888,153	:	DECISION ON PETITION
Filed: September 22, 2010	:	TO MAKE SPECIAL UNDER
Attorney Docket No. 54990	:	37 CFR 1.102(c)(1)
	:	

This is a decision on the petition under 37 CFR 1.102(c)(1), filed October 29, 2010, to make the above-identified application special based on applicant's age as set forth in M.P.E.P. § 708.02, Section IV.

The petition is **GRANTED**.

A grantable petition to make an application special under 37 CFR 1.102(c)(1) and MPEP § 708.02, Section IV: Applicant's Age must be accompanied by evidence showing that at least one of the applicants is 65 years of age, or more, such as a birth certificate or a statement by applicant. No fee is required

The instant petition includes a statement from the attorney of record declaring that he/she is in possession of evidence, and will retain such in the application file record proving that the applicant, Calvin B. Ward is 65 years of age or older. Accordingly, the above-identified application has been accorded "special" status.

Telephone inquiries concerning this decision should be directed to Terri Johnson at 571-272-2991.

All other inquiries concerning either the examination or status of the application should be directed to the Technology Center.

The application is being forwarded to the Technology Center Art Unit 2821 for action on the merits commensurate with this decision.

/Terri Johnson/
Terri Johnson
Petitions Examiner
Office of Petitions

UNITED STATES PATENT AND TRADEMARK OFFICE

Commissioner for Patents
United States Patent and Trademark Office
P.O. Box 1450
Alexandria, VA 22313-1450
www.uspto.gov

THE LAW OFFICES OF CALVIN B. WARD
18 CROW CANYON COURT, SUITE 305
SAN RAMON CA 94583

MAILED

DEC 0 2 2010

OFFICE OF PETITIONS

In re Application of :
Ward :
Application No. 12/888,153 : NOTICE
Filed: 09/22/2010 :
Attorney Docket No. 54990 :

This is a Notice regarding your request for acceptance of a fee deficiency submission under 37 CFR 1.28 filed October 22, 2010.

The Office no longer investigates or rejects original or reissue applications under 37 CFR 1.56. **1098 Off. Gaz. Pat. Office 502 (January 3, 1989)**. Therefore, nothing in this Notice is intended to imply that an investigation was done.

Your fee deficiency submission under 37 CFR 1.28 is hereby **ACCEPTED**.

This application is no longer entitled to small entity status. Accordingly, all future fees paid in this application must be paid at the large entity rate.

This application is being referred to Technology Center Art Unit 2821 for examination in due course.

Inquiries related to this communication should be directed to the undersigned at (571) 272-3211.

C. T. Donnell

Christina Tartera Donnell
Senior Petitions Attorney
Office of Petitions

UNITED STATES PATENT AND TRADEMARK OFFICE

Commissioner for Patents
United States Patent and Trademark Office
P.O. Box 1450
Alexandria, VA 22313-1450
www.uspto.gov

THE LAW OFFICES OF CALVIN B. WARD
18 CROW CANYON COURT, SUITE 305
SAN RAMON CA 94583

MAILED

DEC 09 2010

OFFICE OF PETITIONS

In re Application of	:	
Calvin B. Ward	:	
Application No. 12/888,196	:	ON PETITION
Filed: September 22, 2010		
Attorney Docket No. 54992	:	
	:	

This is a decision on the petition under 37 CFR 1.102(c)(1), filed October 29, 2010, to make the above-identified application special based on applicant's age as set forth in M.P.E.P. § 708.02, Section IV.

The petition is **GRANTED**.

A grantable petition to make an application special under 37 CFR 1.102(c)(1) and MPEP § 708.02, Section IV: Applicant's Age must be accompanied by evidence showing that at least one of the applicants is 65 years of age, or more, such as a birth certificate or a statement by applicant. No fee is required

The instant petition includes a statement (PTO/SB/130 form) by the applicant's attorney that applicant is 65 years of age. Accordingly, the above-identified application has been accorded "special" status.

Telephone inquiries concerning this decision should be directed to the undersigned at 571-272-7751. All other inquiries concerning either the examination or status of the application should be directed to the Technology Center.

This matter is being referred to the Technology Center Art Unit 2821 for action on the merits commensurate with this decision.

Joan Olszewski
Petitions Examiner
Office of Petitions

UNITED STATES PATENT AND TRADEMARK OFFICE

Commissioner for Patents
United States Patent and Trademark Office
P.O. Box 1450
Alexandria, VA 22313-1450
www.uspto.gov

THE LAW OFFICES OF CALVIN B. WARD
18 CROW CANYON COURT, SUITE 305
SAN RAMON CA 94583

MAILED
DEC 09 2010
OFFICE OF PETITIONS

In re Application:
Calvin B. Ward
Application No. 12/888,196
Filed: September 22, 2010
Attorney Docket No. 54992

ON PETITION

This is a notice regarding your request for acceptance of a fee deficiency submission under 37 CFR 1.28 filed October 22, 2010.

On September 1, 1998, the Court of Appeals for the Federal Circuit held that 37 CFR 1.28(c) is the sole provision governing the time for correction of the erroneous payment of the issue fee as a small entity. **See DH Technology v. Synergystex International, Inc. 154 F.3d 1333, 47 USPQ2d 1865 (Fed. Cir. Sept. 1, 1998).**

The Office no longer investigates or rejects original or reissue applications under 37 CFR 1.56. **1098 Off. Gaz. Pat. Office 502 (January 3, 1989).** Therefore, nothing in this Notice is intended to imply that an investigation was done.

Your fee deficiency submission under 37 CFR 1.28 is hereby **ACCEPTED**.

This application is no longer entitled to small entity status. Accordingly, all future fees paid in this application must be paid at the large entity rate.

Telephone inquires concerning this decision should be directed to the undersigned at (571) 272-7751.

Joan Olszewski
Petitions Examiner
Office of Petitions

Doc Code: PET.GREEN
Document Description: Petition for Green Tech Pilot

PTO/SB/420 (11-10)
Approved for use through 01/31/2011. OMB 0651-0062
U.S. Patent and Trademark Office; U. S. DEPARTMENT OF COMMERCE
Under the Paperwork Reduction Act of 1995, no persons are required to respond to a collection of information unless it displays a valid OMB control number.

PETITION TO MAKE SPECIAL UNDER THE GREEN TECHNOLOGY PILOT PROGRAM

Attorney Docket Number: 20079.0004.CNUS00	Application Number (if known): 12/888,293	Filing date: September 22, 2010
First Named Inventor: Frank T. Shum		
Title: LOW OPTICAL LOSS ELECTRODE STRUCTURES FOR LEDS		

APPLICANT HEREBY REQUESTS TO PARTICIPATE IN THE GREEN TECHNOLOGY PILOT PROGRAM FOR THE ABOVE-IDENTIFIED APPLICATION. See Instruction Sheet on page 2.

This petition must be timely filed electronically using the USPTO electronic filing system, EFS-Web.

1. By filing this petition:

   Applicant is requesting early publication: Applicant hereby requests early publication under 37 CFR 1.219 and the publication fee set forth in 37 CFR 1.18(d) accompanies this request.

2. By filing this petition: applicant is agreeing to make an election without traverse in a telephonic interview and elect an invention that meets the eligibility requirements for the Green Technology Pilot Program, if the Office determines that the claims are not obviously directed to a single invention. See Instruction Sheet.

3. This request is accompanied by statements of special status for the eligibility requirement.

4. The application contains no more than three (3) independent claims and twenty (20) total claims.

5. The application does not contain any multiple dependent claims.

6. Other attachments: _____

Signature /Michael S. Garrabrants/	Date November 18, 2010
Name (Print/Typed) Michael S. Garrabrants	Registration Number 51,230

Note: *Signatures of all the inventors or assignees of record of the entire interest or their representative(s) are required in accordance with 37 CFR 1.33 and 11.18. Please see 37 CFR 1.4(d) for the form of the signature. If necessary, submit multiple forms for more than one signature see below*.*

☐ *Total of ..... forms are submitted.

The information is required to obtain or retain a benefit by the public which is to file (and by the USPTO to process) an application. Confidentiality is governed by 35 U.S.C. 122 and 37 CFR 1.11 and 1.14. This collection is estimated to take 12 hours to complete, including gathering, preparing, and submitting the completed application form to the USPTO. Time will vary depending upon the individual case. Any comments on the amount of time you require to complete this form and/or suggestions for reducing this burden, should be sent to the Chief Information Officer, U.S. Patent and Trademark Office, U.S. Department of Commerce, P.O. Box 1450, Alexandria, VA 22313-1450. DO NOT SEND FEES OR COMPLETED FORMS TO THIS ADDRESS. **SEND TO: Commissioner for Patents, P.O. Box 1450, Alexandria, VA 22313-1450.**

If you need assistance in completing the form, call 1-800-PTO-9199 and select option 2.

Attorney Docket No.: 20079.0004.CNUS00
Client Ref. BL060001US-CON-1

IN THE UNITED STATES PATENT AND TRADEMARK OFFICE

In re Patent Application of: Frank T. Shum et al.	Conf. No.: 4167
Serial No.: 12/888,293	Art Unit: 2818
Filing Date: September 22, 2010	Examiner: not yet assigned
Title: LOW OPTICAL LOSS ELECTRODE STRUCTURES FOR LEDS	

STATEMENT UNDER THE GREEN TECHNOLOGY PILOT PROGRAM

Commissioner for Patents
P.O. Box 1450
Alexandria, Virginia 22313-1450

Dear Sir:

The basis for this Petition to Make Special Under the Green Technology Pilot Program is energy conservation. This invention contributes to energy conservation because the invention facilitates the manufacture and/or use of light emitting diodes (LEDs) that use substantially less energy than contemporary incandescent and fluorescent lights. Because the invention allows reduced electrical energy consumption, the invention provides for more efficient utilization and conservation of energy resources. Thus, it is respectfully submitted that the materiality standard is met.

****

The undersigned representative authorizes the Commissioner to charge any additional fees that may be required, or credit any overpayment, to Deposit Account No. 14-1437, referencing Attorney Docket No.: 20079.0004.CNUS00.

In order to facilitate the resolution of any issues or questions presented by this paper, the Examiner may directly contact the undersigned by phone to further the discussion.

Dated: November 18, 2010

Respectfully submitted,

By /Michael S. Garrabrants/

Michael S. Garrabrants
Registration No. 51,230
NOVAK DRUCE & QUIGG LLP
555 Mission Street, 34th Floor
San Francisco, California 94105
Tel.: (415) 814-6161
Fax: (415) 814-6165

UNITED STATES PATENT AND TRADEMARK OFFICE

UNITED STATES DEPARTMENT OF COMMERCE
United States Patent and Trademark Office
Address: COMMISSIONER FOR PATENTS
P.O. Box 1450
Alexandria, Virginia 22313-1450
www.uspto.gov

APPLICATION NO.	FILING DATE	FIRST NAMED INVENTOR	ATTORNEY DOCKET NO.	CONFIRMATION NO.
12/888,293	09/22/2010	Frank T. Shum	20079.0004.CNUS00	4167

65761 7590 11/30/2010

SAN FRANCISCO OFFICE OF
NOVAK DRUCE + QUIGG LLP
1000 LOUISIANA STREET
FIFTY-THIRD FLOOR
HOUSTON, TX 77002

EXAMINER	
ART UNIT	PAPER NUMBER
2818	

MAIL DATE	DELIVERY MODE
11/30/2010	PAPER

Please find below and/or attached an Office communication concerning this application or proceeding.

The time period for reply, if any, is set in the attached communication.

UNITED STATES PATENT AND TRADEMARK OFFICE

Commissioner for Patents
United States Patent and Trademark Office
P.O. Box 1450
Alexandria, VA 22313-1450
www.uspto.gov

SAN FRANCISCO OFFICE OF
NOVAK DRUCE + QUIGG LLP
1000 LOUISIANA STREET
FIFTY-THIRD FLOOR
HOUSTON TX 77002

In re Application of	:	
SHUM et al.	:	DECISION ON PETITION
Application No. 12/888,293	:	TO MAKE SPECIAL UNDER
Filed: September 22, 2010	:	THE GREEN TECHNOLOGY
Attorney Docket No. 20079.0004.CNUS00	:	PILOT PROGRAM

This is a decision on the petition under 37 CFR 1.102, filed on November 18, 2010, to make the above-identified application special under the pilot program for applications pertaining to Green Technologies as set forth 74 Federal Register Notice 64666 (December 8, 2009) and amended by 75 Federal Register Notice 28554 (May 21, 2010) and 75 Federal Register Notice 69049 (November 10, 2010).

The petition is **DISMISSED**.

If reconsideration of this decision is desired, a petition for reconsideration must be filed within ONE (1) MONTH OR THIRTY (30) DAYS from the mail date of this decision, whichever is longer. No extension of this time limit can be granted under 37 CFR 1.136(a) or (b). The petition for reconsideration should include an exhaustive attempt to provide the lacking item(s) noted below, since, after a decision on the petition for reconsideration, no further reconsideration or review of the matter will be undertaken by the Director.

A grantable petition to make an application special under 37 CFR 1.102 and the pilot program as set forth in 74 FR 64666 must be directed to a nonprovisional application filed under 35 USC 111(a) or be a national stage entry under 35 USC 371, exclusive of any reissue applications and be filed prior to the date of the notice, December 8, 2009.

In order to qualify for special status, the following requirements must be met. 1) The application must have no more than 3 independent claims and no more than 20 total claims. 2) The application must not contain any multiple dependent claims. 3) The petition must state the basis for seeking special status, i.e., the claimed invention either: A) materially enhances the quality of the environment or B) materially contributes to: i) the discovery or development of renewable energy resources, ii) the more efficient utilization and conservation of energy resources, or iii) greenhouse gas emission reduction. 4) If the disclosure is not clear on its face that the claimed invention materially contributes under category (A) or (B), the petition must be accompanied by

a statement by the applicant, assignee, or an attorney/agent registered to practice before the Office explaining how the materiality standard is met. 5) A statement that applicant will agree to make an election without traverse in a telephonic interview if a restriction requirement is made by the examiner. 6) The petition to make special must be filed electronically. 7) The petition must be filed at least one day prior to the date that a first Office Action appears in the Patent Application Information Retrieval (PAIR) system. 8) The petition must be accompanied by a request for early publication in compliance with 37 CFR 1.219 and include the publication fee as set forth in 37 CFR 1.18(d).

The requirement for a fee for consideration of the petition to make special for applications pertaining to Green Technologies has been waived.

The petition lacks item 4.

In regard to item 4, applicant's statement pertaining to how the materiality standard is met does not satisfy the requirements for this pilot. The instant petition includes a statement identifying the basis for the special status as contributing to energy conservation. Specifically, the petition indicates that the present invention relates to facilitating the manufacture and/or use of light emitting diodes (LEDs). However, the materiality standard does not permit an applicant to speculate as to how a hypothetical end-user might specially apply the invention in a manner that could contribute to energy conservation. The claims are directed to an electrode structure which is capable of being used with LEDs or other structures. Any argument that the claimed invention can be used to facilitate the manufacture and/or use of (LEDs) is considered speculate as to how a hypothetical end-user might specially apply the claimed invention. Favorable consideration would be give if applicant presents at least one claim directed to an LED having the electrode structure of the current claims.

Any reconsideration of this decision should be submitted through the USPTO electronic filing system, EFS-Web, and selecting the document description of "Petition for Green Tech Pilot" on the EFS-Web screen.

Telephone inquiries concerning this decision should be directed to Lee W. Young at 571-272-4549.

The application is being forwarded to the Technology Center Art Unit 2818 for action in its regular turn.

Lee W. Young
Quality Assurance Specialist
Technology Center 2800

IN THE UNITED STATES PATENT AND TRADEMARK OFFICE

In re Patent Application of: Frank T. Shum et al.	Conf. No.: 4167
Serial No.: 12/888,293	Art Unit: 2818
Filing Date: September 22, 2010	Examiner: Dao H. Nguyen
Title: LOW OPTICAL LOSS ELECTRODE STRUCTURES FOR LEDS	

REQUEST FOR RECONSIDERATION OF DISMISSED PETITION TO MAKE SPECIAL & STATEMENT UNDER THE GREEN TECHNOLOGY PILOT PROGRAM

Commissioner for Patents
P.O. Box 1450
Alexandria, Virginia 22313-1450

Dear Sir:

A petition to make special under the Green Technology Pilot Program was filed on November 18, 2010. The petition was with respect to the original claims filed on September 22, 2010.

The rationale for dismissing the petition was that the Statement of the basis to make special did not have an adequate nexus with these claims, in that the claimed subject matter could be used with or in a Light Emitting Diode (LED), but that the claims did not necessarily require such usage. The paper describing the petition dismissal indicated that if there was at least one claim that required the presence of an LED, or incorporation of the claimed technology in an LED, then the nexus requirement would be satisfied.

A preliminary amendment was filed on December 14, 2010, which added a new claim (claim 14), directed to an LED that incorporates the subject matter of independent claim 1. As such, Applicants submit that the Petition is in condition for reconsideration in view of the revised

claimset. Because the nexus requirement is now satisfied, Applicants further submit that the petition to make special can be granted.

STATEMENT UNDER THE GREEN TECHNOLOGY PILOT PROGRAM

This Statement was provided in the original petition and is repeated below for convenience.

The basis for this Petition to Make Special Under the Green Technology Pilot Program is energy conservation. This invention contributes to energy conservation because the invention facilitates the manufacture and/or use of light emitting diodes (LEDs) that use substantially less energy than contemporary incandescent and fluorescent lights. Because the invention allows reduced electrical energy consumption, the invention provides for more efficient utilization and conservation of energy resources. Thus, it is respectfully submitted that the materiality standard is met.

CONCLUSION

****

The undersigned representative authorizes the Commissioner to charge any additional fees that may be required, or credit any overpayment, to Deposit Account No. 14-1437, referencing Attorney Docket No.: 20079.0004.CNUS00.

In order to facilitate the resolution of any issues or questions presented by this paper, the Examiner may directly contact the undersigned by phone to further the discussion.

Dated: December 29, 2010

Respectfully submitted,

By /Michael S. Garrabrants/

Michael S. Garrabrants
Registration No. 51,230
NOVAK DRUCE & QUIGG LLP
555 Mission Street, 34th Floor
San Francisco, California 94105
Tel.: (415) 814-6161
Fax: (415) 814-6165

UNITED STATES PATENT AND TRADEMARK OFFICE

UNITED STATES DEPARTMENT OF COMMERCE
United States Patent and Trademark Office
Address: COMMISSIONER FOR PATENTS
P.O. Box 1450
Alexandria, Virginia 22313-1450
www.uspto.gov

APPLICATION NO.	FILING DATE	FIRST NAMED INVENTOR	ATTORNEY DOCKET NO.	CONFIRMATION NO.
12/888,293	09/22/2010	Frank T. Shum	20079.0004.CNUS00	4167

99483 7590 01/12/2011

Bridgelux, Inc. c/o Novak Druce + Quigg LLP
1000 Lousiana Street, Fifty- Third Floor
Houston, TX 77002

EXAMINER	
NGUYEN, DAO H	

ART UNIT	PAPER NUMBER
2818	

MAIL DATE	DELIVERY MODE
01/12/2011	PAPER

Please find below and/or attached an Office communication concerning this application or proceeding.

The time period for reply, if any, is set in the attached communication.

UNITED STATES PATENT AND TRADEMARK OFFICE

Commissioner for Patents
United States Patent and Trademark Office
P.O. Box 1450
Alexandria, VA 22313-1450
www.uspto.gov

Bridgelux, Inc. c/o Novak Druce + Quigg LLP
1000 Lousiana Street, Fifty- Third Floor
Houston TX 77002

In re Application of	:	
SHUM et al.	:	DECISION ON PETITION
Application No. 12/888,293	:	TO MAKE SPECIAL UNDER
Filed: September 22, 2010	:	THE GREEN TECHNOLOGY
Attorney Docket No. 20079.0004.CNUS00	:	PILOT PROGRAM

This is a decision on the petition under 37 CFR 1.102, filed on November 18, 2010 and renewed on December 29, 2010, to make the above-identified application special under the pilot program for applications pertaining to Green Technologies as set forth 74 Federal Register Notice 64666 (December 8, 2009) and amended by 75 Federal Register Notice 28554 (May 21, 2010) and 75 Federal Register Notice 69049 (November 10, 2010).

The petition is **GRANTED**.

A grantable petition to make an application special under 37 CFR 1.102 and the pilot program as set forth in 74 FR 64666 must be directed to a nonprovisional application filed under 35 USC 111(a) or be a national stage entry under 35 USC 371, exclusive of any reissue applications.

In order to qualify for special status, the following requirements must be met. 1) The application must have no more than 3 independent claims and no more than 20 total claims. 2) The application must not contain any multiple dependent claims. 3) The petition must state the basis for seeking special status, i.e., the claimed invention either: A) materially enhances the quality of the environment or B) materially contributes to: i) the discovery or development of renewable energy resources, ii) the more efficient utilization and conservation of energy resources, or iii) greenhouse gas emission reduction. 4) If the disclosure is not clear on its face that the claimed invention materially contributes under category (A) or (B), the petition must be accompanied by a statement by the applicant, assignee, or an attorney/agent registered to practice before the Office explaining how the materiality standard is met. 5) A statement that applicant will agree to make an election without traverse in a telephonic interview if a restriction requirement is made by the examiner. 6) The petition to make special must be filed electronically. 7) The petition must be filed at least one day prior to the date that a first Office Action appears in the Patent Application Information Retrieval (PAIR) system. 8) The petition must be accompanied by a request for early publication in compliance with 37 CFR 1.219 and include the publication fee as set forth in 37 CFR 1.18(d).

The requirement for a fee for consideration of the petition to make special for applications pertaining to Green Technologies has been waived.

The instant petition complies with items 1 – 8 above. Accordingly, the above-identified application has been accorded "special" status.

Telephone inquires concerning this decision should be directed to Lee W. Young at 571-272-4549.

The application is being forwarded to the Technology Center Art Unit 2818 for action in its regular turn.

Lee W. Young
Quality Assurance Specialist
Technology Center 2800

UNITED STATES PATENT AND TRADEMARK OFFICE

Commissioner for Patents
United States Patent and Trademark Office
P.O. Box 1450
Alexandria, VA 22313-1450
www.uspto.gov

VLP LAW GROUP LLP
555 BRYANT STREET
SUITE 820
PALO ALTO CA 94301

MAILED

AUG 0 9 2011

OFFICE OF PETITIONS

In re Application of :
Reder, et al. :
Application No. 12/888,298 : ON PETITION
Filed: September 22, 2010 :
Attorney Docket No. 901-001-002 :

This is a decision on the petition to revive under 37 CFR 1.137(b), filed July 20, 2011.

The petition under 37 CFR 1.137(b) is **GRANTED.**

The above-identified application became abandoned for failure to timely file a substitute specification and replacement drawings as required by the Notice to File Corrected Application Papers, mailed October 8, 2010. This Notice set an extendable period for reply of two months. No reply having been received, the application became abandoned on December 9, 2010. The Office mailed a Notice of Abandonment on June 24, 2011.

With the instant petition, applicants paid the petition fee, made the proper statement of unintentional delay, and submitted the required reply in the form of a substitute specification and replacement drawings.

The file does not indicate a change of address has been submitted, although the address given on the petition differs from the address of record. If appropriate, a change of address should be filed in accordance with MPEP 601.03. A courtesy copy of this decision is being mailed to the address given on the petition; however, the Office will mail all future correspondence solely to the address of record.

The application is being forwarded to the Office of Patent Application Processing for pre-examination processing.

Telephone inquiries concerning this decision should be directed to the undersigned at (571)272-3207.

Cliff Congo
Petitions Attorney
Office of Petitions

cc: James G. Markey
VLP Law Group LLP
1979 Marcus Ave
Suite 210
Lake Success, New York 11042

UNITED STATES PATENT AND TRADEMARK OFFICE

UNITED STATES DEPARTMENT OF COMMERCE
United States Patent and Trademark Office
Address: COMMISSIONER FOR PATENTS
P.O. Box 1450
Alexandria, Virginia 22313-1450
www.uspto.gov

APPLICATION NO.	FILING DATE	FIRST NAMED INVENTOR	ATTORNEY DOCKET NO.	CONFIRMATION NO.
12/888,321	09/22/2010	Kimio Miseki	8616P1029	4224

8791 7590 07/19/2011

BLAKELY SOKOLOFF TAYLOR & ZAFMAN LLP
1279 OAKMEAD PARKWAY
SUNNYVALE, CA 94085-4040

EXAMINER	
ART UNIT	PAPER NUMBER
2614	

MAIL DATE	DELIVERY MODE
07/19/2011	PAPER

Please find below and/or attached an Office communication concerning this application or proceeding.

The time period for reply, if any, is set in the attached communication.

UNITED STATES PATENT AND TRADEMARK OFFICE

Commissioner for Patents
United States Patent and Trademark Office
P.O. Box 1450
Alexandria, VA 22313-1450
www.uspto.gov

BLAKELY SOKOLOFF TAYLOR & ZAFMAN LLP
1279 OAKMEAD PARKWAY
SUNNYVALE CA 94085-4040

In re Application of
MISEKI et al.
Application No.: 12/888,321
Filed: 22 September 2010
Attorney Docket No.: 8616P1029
For: ACOUSTIC SIGNAL COMPENSATOR AND ACOUSTIC SIGNAL COMPENSATION METHOD

: DECISION ON REQUEST TO
: PARTICIPATE IN THE PATENT
: PROSECUTION HIGHWAY
: PROGRAM AND PETITION
: TO MAKE SPECIAL UNDER
: 37 CFR 1.102(a)

This is a decision on the request to participate in the Patent Prosecution Highway (PPH) program and the petition under 37 CFR 1.102(a), filed 02 June 2011, to make the above-identified application special.

The request and petition are **GRANTED**.

Discussion

A grantable request to participate in the PPH pilot program and petition to make special require:

1. The U.S. application is

    a. a Paris Convention application which either
        i. validly claims priority under 35 U.S.C. 119(a) and 37 CFR 1.55 to one or more applications filed in the JPO, or
        ii. validly claims priority to a PCT application that contains no priority claims, or
    b. a national stage application under the PCT (an application which entered the national stage in the U.S. from a PCT international application after compliance with 35 U.S.C. 371), which PCT application
        i. validly claims priority to an application filed in the JPO, or
        ii. validly claims priority to a PCT application that contains no priority claims, or
        iii. contains no priority claim, or
    c. a so-called bypass application filed under 35 U.S.C. 111(a) which validly claims benefit under 35 U.S.C. 120 to a PCT application, which PCT application
        i. validly claims priority to an application filed in the JPO, or
        ii. validly claims priority to a PCT application that contains no priority claims, or

iii. contains no priority claim;

2. Applicant must submit a copy of:
    a. The allowable/patentable claim(s) from the JPO application(s);
    b. An English translation of the allowable/patentable claim(s) and
    c. A statement that the English translation is accurate;
3. Applicant must:
    a. Ensure all the claims in the U.S. application must sufficiently correspond or be amended to sufficiently correspond to the allowable/patentable claim(s) in the JPO application(s) and
    b. Submit a claims correspondence table in English;
4. Examination of the U.S. application has not begun;
5. Applicant must submit:
    a. Documentation of prior office action:
        i. a copy of the office action(s) just prior to the "Decision to Grant a Patent" from each of the JPO application(s) containing the allowable/patentable claim(s) or
        ii. if the allowable/patentable claims(s) are from a "Notification of Reasons for Refusal" then the Notification of Reasons for Refusal or
        iii. if the JPO application is a first action allowance then no office action from the JPO is necessary should be indicated on the request/petition form;
    b. An English language translation of the JPO Office action from (5)(a)(i)-(ii) above
    c. A statement that the English translation is accurate;
6. Applicant must submit:
    a. An IDS listing the documents cited by the JPO examiner in the JPO office action (unless already submitted in this application)
    b. Copies of the documents except U.S. patents or U.S. patent application publications (unless already submitted in this application);

The request to participate in the PPH pilot program and petition comply with the above requirements. Accordingly, the above-identified application has been accorded "special" status.

Inquiries concerning this decision should be directed to Lee W. Young at 571-272-4549.

All other inquiries concerning the examination or status of the application is accessible in the PAIR system at http://www.uspto.gov/ebc.index.html.

This application will be forwarded to the examiner for action on the merits commensurate with this decision once this application's formality reviews have been completed.

Lee W. Young
TQAS Technology Center 2600

UNITED STATES PATENT AND TRADEMARK OFFICE

Commissioner for Patents
United States Patent and Trademark Office
P.O. Box 1450
Alexandria, VA 22313-1450
www.uspto.gov

MAILED NOV 22 2010

NOVAK DRUCE AND QUIGG, LLP (Thule)
1000 LOUISIANA STREET
FIFTY-THIRD FLOOR
HOUSTON TX 77002

In re Application of: Flaherty et al.
Application No.: 12/888341
Filed: September 22, 2010
Title: ANTI-SWAY APPARATUS FOR A RACK ARRANGEMENT

DECISION ON PETITION TO MAKE SPECIAL FOR NEW APPLICATION UNDER 37 C.F.R. § 1.102 & M.P.E.P. § 708.02

This is a decision on the petition filed on September 22, 2010 to make the above-identified application special for accelerated examination procedure under 37 C.F.R. § 1.102(d).

The petition to make the application special is **DISMISSED**.

REGULATION AND PRACTICE

A grantable petition to make special under 37 C.F.R. § 1.102(d) and pursuant to the "Change to Practice for Petitions in Patent Applications to Make Special and for Accelerated Examination" published in the Federal Register on June 26, 2006 (71 Fed. Reg. 36323), must satisfy the following conditions:

I. Conditions Regarding the Application:

1. the application must be a non-reissue utility or design application filed under 37 CFR 1.111(a);

2. the application, the petition and the required fees must be filed electronically using the USPTO's electronic filing system (EFS), or EFS-web; if not filed electronically, a statement asserting that EFS and EFS-web were not available during the normal business hours.

3. at the time of filing, the application must be complete under 37 CFR 1.51 and in condition for examination;

4. the application must contain three or fewer independent claims and twenty or fewer total claims and the claims must be directed to a single invention.

II. Conditions Regarding the Petition:

The petition must:

1. be filed with the application;

2. include a statement that applicant agrees not to separately argue the patentability of any independent claim during any appeal in the application;

3. include a statement that applicant agrees to make an election without traverse in a telephone interview.

4. include a statement that applicant agrees to conduct such an interview when requested by the examiner.

5. include a statement, made based on a good faith belief, that a preexamination search in compliance with the following requirements, was conducted, including an identification of the field of search by United States class and subclass, where applicable, and for database searches, the search logic or chemical structure or sequence used as a query, the name of the file(s) searched and the database service, and the date of the search.

The preexamination search must:

5.1 involve U.S. patents and patent application publications, foreign patent documents, and non-patent literature, unless the applicant can justify with reasonable certainty that no references more pertinent than those already identified are likely to be found in the eliminated sources and includes such a justification with this statement;

5.2. be directed to the claimed invention and encompass all of the features of the claims, giving the claims the broadest reasonable interpretation;

5.3. encompass the disclosed features that may be claimed.

6. must provide in support of the petition an accelerated examination support document. An accelerated examination support document must include:

6.1. an information disclosure statement (IDS) in compliance with 37 CFR 1.98 citing each reference deemed most closely related to the subject matter of each of the claims;

6.2. an identification of all the limitations in the claims that are disclosed by the reference specifying where the limitation is disclosed in the cited reference;

6.3. a detailed explanation of how each of the claims are patentable over the references cited with particularity required by 37 CFR 1.111(b) and (c);

6.4. a concise statement of the utility of the invention as defined in each of the independent claims (unless the application is a design application);

6.5. a showing of where each limitation of the claims finds support under 35 U.S.C. 112, first paragraph, in the written description of the specification. If applicable, the showing must also identify: (1) each means- (or step) plus-function claim element that invokes consideration under 35 U.S.C. 112, sixth paragraph; and (2) the structure, material, or acts in the specification that corresponds to each means- (or step) plus-function claim element that invokes consideration under 35 U.S.C. 112, sixth paragraph; if the application claims the benefit of one or more applications under title 35, United States Code, the showing must also include where each limitation of the claims finds support under 35 U.S.C. 112, first paragraph, in each such application in which such supports exists;

6.6. an identification of any cited references that may be disqualified under 35 U.S.C. 103(c).

REVIEW OF FACTS

The conditions I:1-4, II: 1-5, 5.3, 6, 6.1, 6.3, 6.4 and 6.6 above are considered to have been met. However, the petition fails to comply with conditions II : 5.1, 5.2, 6.2, and 6.5 above. Therefore,

the petition fails to meet the required conditions to be accorded special status under the accelerated examination procedure.

Discussion

When referring to "the petition" hereinbelow, the received papers under consideration include the PTO/SB/28 form, the "pre-examination search document" including pages ***; the "accelerated examination support document" comprising pages ***, and an Information Disclosure Statement including form PTO/SB/08A.

Regarding the requirements of section II element 5.1 and 5.2 outlined above, it appears the search outlined in the petition omitted a critical search area by not searching in class 224 subclasses 553 and 924.
The following text searches should be done (East search format):
(224/$.ccls.) and (bike or bicycle) and (stabiliz$3 or sway$3)
(D12/407 or D12/408) and (stabiliz$3 or sway$3)

Regarding the requirements of section II element 6.2 outlined above, the petition fails to identify all of the limitations in the application claims that are disclosed in each of the reference(s) and where the limitation is disclosed in each of the cited reference. As stated in the policy published in the Federal Register on June 26, 2006 (71 Fed. Reg. 36323), for each reference cited, the examination support document must include an identification of all the limitations in the claims that are disclosed by the reference specifying where the limitation is disclosed in the cited reference. The policy statement does not caveat "the independent claims", nor does it allow for grouping and general discussions. A grantable petition must delineate every limitation of every claim and identify where the equivalent limitation is disclosed in each piece of prior art cited on the IDS. As is published on www.uspto.gov/web/patents/accelerated/ in "Guidelines for Applicants under the new accelerated examination procedures"):

> *For each reference cited, the accelerated examination support document must include an identification of all the limitations in the claims that are disclosed by the reference specifying where the limitation is disclosed in the cited reference. Applicants should specify where in each of the cited references the particular claim limitations are found. This process is intended to be analogous to the analysis an examiner uses when locating a relevant prior art reference and then determining whether the reference contains the claimed limitation. For each claimed limitation, the examiner would consider the disclosure of the reference and all reasonable portions in the reference where the limitation is shown. When preparing an Office Action, the examiner would correlate the limitation to the portion of reference which best characterizes the limitation. This part of the AESD is not intended to be an exhaustive listing of every conceivable subjective interpretation of how a claim limitation may read on the reference. Applicants should point out what are considered to be the relevant representations of the limitation in the reference. A limitation may be found in more than one portion of the reference and should be pointed out, yet the intention is not to have applicants point out every conceivable interpretation. The USPTO will adopt a rule of reason when evaluating this portion of the AESD. Unless the representation is so deficient that it would materially effect examination of the application (e.g., numerous instances where the limitations are*

not shown where applicant states they are), the representation will be deemed to be sufficient for this part of the AESD.

In the instant petition, on page 7 of the AESD petitioner makes reference to "Imam" in the heading for claim elements not apparently disclosed. It is not clear whether petitioner intended to include this additional reference as part of the AESD. Clarification must be made with regard to this reference.

Regarding the requirements of section II element 6.5 outlined above, the requirements of this section are not met. A grantable petition requires petitioner to provide a showing of where each limitation of the claims finds support under 35 U.S.C. 112, first paragraph, in the written description of the specification. If applicable, the showing must also identify: (1) each means- (or step) plus-function claim element that invokes consideration under 35 U.S.C. 112, sixth paragraph; and (2) the structure, material, or acts in the specification that corresponds to each means- (or step) plus-function claim element that invokes consideration under 35 U.S.C. 112, sixth paragraph; if the application claims the benefit of one or more applications under title 35, United States Code, the showing must also include where each limitation of the claims finds support under 35 U.S.C. 112, first paragraph, in each such application in which such supports exists. In the instant petition, 35 U.S.C. 112 support has not been shown for the priority document, provisional application 61/244850.

DECISION

For the above-stated reasons, the petition is **dismissed**. The application will therefore be taken up by the examiner for action in its regular turn.

Petitioner is given a single opportunity to perfect the petition. Any request for reconsideration of this decision must be submitted within 1 (one) month or 30 (thirty) days, whichever is longer, (no extension of time under 37 CFR 1.136(a)) from the date of this decision in order to be considered timely. Any request for reconsideration must address all of the deficiencies indicated above.

Petitioner is reminded that, upon granting of the special status of the application on request for reconsideration, the application will be processed expeditiously. However, due to the dismissal of the instant petition, examination may not be completed within twelve months of the filing date of the application.

Any inquiry regarding this decision should be directed to Linda J. Sholl, TC 3700 Special Programs Examiner, at (571) 272-4391.

/Linda J. Sholl/
Linda J. Sholl
Special Programs Examiner
Technology Center 3700

UNITED STATES PATENT AND TRADEMARK OFFICE

Commissioner for Patents
United States Patent and Trademark Office
P.O. Box 1450
Alexandria, VA 22313-1450
www.uspto.gov

NOVAK DRUCE AND QUIGG, LLP (Thule)
1000 LOUISIANA STREET
FIFTY-THIRD FLOOR
HOUSTON TX 77002

Mail Date: Feb. 14, 2011

In re Application of: Flaherty et al.
Application No.: 12/888341
Filed: September 22, 2010
Title: ANTI-SWAY APPARATUS FOR A RACK ARRANGEMENT

DECISION ON PETITION TO MAKE SPECIAL FOR NEW APPLICATION UNDER 37 C.F.R. § 1.102 & M.P.E.P. § 708.02

This is a decision on the renewed petition filed on December 17, 2010 to make the above-identified application special for accelerated examination procedure under 37 C.F.R. § 1.102(d).

The petition to make the application special is GRANTED.

The application is eligible for accelerated examination and the petition complies with the conditions for granting the application special status pursuant to the "Change to Practice for Petitions in Patent Applications to Make Special and for Accelerated Examination" published June 26, 2006, in the Federal Register. (71 Fed. Reg. 36323).

The prosecution of the instant application will be conducted expeditiously according to the following guidelines.

1. The application will be docketed to an examiner and taken up for action within two weeks of the date of this decision.

2. Restriction Practice:
   If the examiner determines that the claims are not directed to a single invention, a telephone request to elect one single invention will be made pursuant to MPEP 812.01. As a prerequisite to the grant of this petition, the applicant has agreed to make an oral election, by telephone, without traverse. If the applicant refuses to make an election without traverse, or the examiner cannot reach the applicant after a reasonable effort, the examiner will treat the first claimed invention (invention defined by claim 1) as having being constructively elected without traverse for examination.

3. Office action:
   If it is determined that, after appropriate consultation, there is a potential rejection or any other issue to be addressed, the examiner will telephone the applicant and arrange an interview to discuss and resolve the issue. An Office action, other than a Notice of Allowance and Fee(s) Due (Notice of Allowance), will not be issued unless either: 1) an interview was conducted but did not result in agreed to action that places the application in condition for allowance, or, 2) a determination is made that an interview would be unlikely to result in the application being placed in condition for allowance, and 3) an internal conference has been held to review any rejection of any claim.

4. Time for Reply:
   An Office action other than a Notice of Allowance or a final Office action will set a shortened statutory period of one month or thirty days, whichever is longer, for reply with no extension of time available under 37 CFR 1.136(a). Failure to timely file a reply within this non-extendible period for reply will result in the abandonment of the application.

5. Reply by Applicant:
   A timely reply to an Office action other than the Notice of Allowance must be submitted electronically via EFS or EFS-web and limited to addressing the rejections, objections and requirement made. Any amendment that attempts to: 1) add claims which would result in more than three pending independent claims or more than twenty pending total claims; 2) present claims not encompassed by the pre-examination search or an updated accelerated examination support document; or 3) present claims that are directed a non-elected invention or an invention other than that previously claimed and examined in the application, will be treated as not fully responsive and will not be entered.

   For any amendment to the claims (including any new claim) that is not encompassed by the accelerated examination support document, applicant must provide an updated accelerated examination support document that encompasses the amended or new claims at the time of filing of the amendment.

   To proceed expeditiously with the examination, it is recommended that a reply with amendments made to any claim or with any new claim being added be accompanied by an updated accelerated examination support document or a statement explaining how the amended or new claim is supported by the original accelerated examination support document.

6. Information Disclosure Statement (IDS):
   Any IDS filed during prosecution must be submitted electronically via EFS or EFS-web, accompanied by an updated accelerated examination support document, and be in compliance with 37 CFR 1.97 and 1.98.

7. Post-Allowance Processing:
   To expedite processing of the allowed application into a patent, the applicant must: 1) pay the required fees within one month of the date of the Notice of Allowance, and 2) not file any post allowance papers not required by the Office. In no event may the issue fee be paid and accepted later than three months from the date of the Notice of Allowance.

8. After-Final and Appeal Procedures:
   To expedite prosecution, after receiving the final Office action, applicant must: 1) promptly file a notice of appeal, an appeal brief and appeal fees; and 2) not request a pre-appeal brief conference.

   Any amendment, affidavit or other evidence filed after final Office action must comply with applicable rules and the requirements outlined in numbered paragraphs 5 and 6 above.

   On appeal, the application will proceed according to normal appeal procedures. After appeal, the application will again be treated special.

9. Proceedings Outside the Normal Examination Process:
   If the application becomes involved in a proceeding that is outside the normal examination process (e.g., a secrecy order, national security review, interference proceeding, petitions under 37 CFR 1.181, 182 or 183), the application will be treated special before and after such proceeding.

10. Final Disposition:
    The twelve month goal of this accelerated examination procedure ends with a final disposition. The mailing of a final Office action, a Notice of Allowance, the filing of a Notice of Appeal, or the filing of a Request for Continued Examination (RCE) is the final disposition.

If, during prosecution, a paper is not filed electronically using EFS-web, a reply is filed but is not fully responsive, the application is involved in an appeal, or a proceeding outside normal examination process, the application will still be examined expeditiously, however, the final disposition may occur more than twelve months from the filing of the application.

Any inquiry regarding this decision should be directed to Linda Sholl at (571) 272-4391

/Linda Sholl/
Linda Sholl
Special Programs Examiner
Technology Center 3700

UNITED STATES PATENT AND TRADEMARK OFFICE

Commissioner for Patents
United States Patent and Trademark Office
P.O. Box 1450
Alexandria, VA 22313-1450
www.uspto.gov

SHAY GLENN LLP
2755 CAMPUS DRIVE
SUITE 210
SAN MATEO CA 94403

MAILED

MAY 23 2011

OFFICE OF PETITIONS

In re Application of :
MCCLELLAN, William T. et al. :
Application No. 12/888,357 : DECISION ON PETITION
Filed: September 22, 2010 : TO MAKE SPECIAL UNDER
Attorney Docket No. **11546-702.501** : 37 CFR 1.102(c)(1)
:

This is a decision on the petition under 37 CFR 1.102(c)(1), filed May 16, 2011 to make the above-identified application special based on applicant's age as set forth in M.P.E.P. § 708.02, Section IV.

The petition is **GRANTED**.

A grantable petition to make an application special under 37 CFR 1.102(c)(1) and MPEP § 708.02, Section IV: Applicant's Age must be accompanied by evidence showing that at least one of the applicants is 65 years of age, or more, such as a birth certificate or a statement by applicant. No fee is required

The instant petition includes a statement by John Krumme attesting to his age. Accordingly, the above-identified application will be accorded "special" status.

Telephone inquiries concerning this decision should be directed to Tredelle Jackson at 571-272-2783.

All other inquiries concerning either the examination or status of the application should be directed to the Technology Center.

This application is being referred to the Office of Patent Application Processing. This application will be accorded "special" status when pre-examination processing is done.

/Tredelle D. Jackson/
Paralegal Specialist
Office of Petitions

Doc Code: PET.GREEN
Document Description: Petition for Green Tech Pilot

PTO/SB/420 (11-10)
Approved for use through 01/31/2011. OMB 0651-0062
U.S. Patent and Trademark Office; U. S. DEPARTMENT OF COMMERCE
Under the Paperwork Reduction Act of 1995, no persons are required to respond to a collection of information unless it displays a valid OMB control number.

PETITION TO MAKE SPECIAL UNDER THE GREEN TECHNOLOGY PILOT PROGRAM

Attorney Docket Number: 20079.0004.CNUS01	Application Number (if known): 12/888,360	Filing date: September 22, 2010
First Named Inventor: Frank T. Shum		
Title: LEDs with LOW OPTICAL LOSS ELECTRODE STRUCTURES		

APPLICANT HEREBY REQUESTS TO PARTICIPATE IN THE GREEN TECHNOLOGY PILOT PROGRAM FOR THE ABOVE-IDENTIFIED APPLICATION. See Instruction Sheet on page 2.

This petition must be timely filed electronically using the USPTO electronic filing system, EFS-Web.

1. By filing this petition:

   Applicant is requesting early publication: Applicant hereby requests early publication under 37 CFR 1.219 and the publication fee set forth in 37 CFR 1.18(d) accompanies this request.

2. By filing this petition: applicant is agreeing to make an election without traverse in a telephonic interview and elect an invention that meets the eligibility requirements for the Green Technology Pilot Program, if the Office determines that the claims are not obviously directed to a single invention. See Instruction Sheet.

3. This request is accompanied by statements of special status for the eligibility requirement.

4. The application contains no more than three (3) independent claims and twenty (20) total claims.

5. The application does not contain any multiple dependent claims.

6. Other attachments: _____

Signature /Michael S. Garrabrants/	Date November 18, 2010
Name (Print/Typed) Michael S. Garrabrants	Registration Number 51,230

Note: *Signatures of all the inventors or assignees of record of the entire interest or their representative(s) are required in accordance with 37 CFR 1.33 and 11.18. Please see 37 CFR 1.4(d) for the form of the signature. If necessary, submit multiple forms for more than one signature see below*.*

☐ *Total of ..... forms are submitted.

The information is required to obtain or retain a benefit by the public which is to file (and by the USPTO to process) an application. Confidentiality is governed by 35 U.S.C. 122 and 37 CFR 1.11 and 1.14. This collection is estimated to take 12 hours to complete, including gathering, preparing, and submitting the completed application form to the USPTO. Time will vary depending upon the individual case. Any comments on the amount of time you require to complete this form and/or suggestions for reducing this burden, should be sent to the Chief Information Officer, U.S. Patent and Trademark Office, U.S. Department of Commerce, P.O. Box 1450, Alexandria, VA 22313-1450. DO NOT SEND FEES OR COMPLETED FORMS TO THIS ADDRESS. **SEND TO: Commissioner for Patents, P.O. Box 1450, Alexandria, VA 22313-1450.**

If you need assistance in completing the form, call 1-800-PTO-9199 and select option 2.

Attorney Docket No.: 20079.0004.CNUS01
Client Ref. BL060001US-CON-2

IN THE UNITED STATES PATENT AND TRADEMARK OFFICE

In re Patent Application of: Frank T. Shum et al.	Conf. No.: 4315
Serial No.: 12/888,360	Art Unit: 2818
Filing Date: September 22, 2010	Examiner: Dao H. Nguyen
Title: LEDs with LOW OPTICAL LOSS ELECTRODE STRUCTURES	

STATEMENT UNDER THE GREEN TECHNOLOGY PILOT PROGRAM

Commissioner for Patents
P.O. Box 1450
Alexandria, Virginia 22313-1450

Dear Sir:

The basis for this Petition to Make Special Under the Green Technology Pilot Program is energy conservation. This invention contributes to energy conservation because the invention facilitates the manufacture and/or use of light emitting diodes (LEDs) that use substantially less energy than contemporary incandescent and fluorescent lights. Because the invention allows reduced electrical energy consumption, the invention provides for more efficient utilization and conservation of energy resources. Thus, it is respectfully submitted that the materiality standard is met.

****

The undersigned representative authorizes the Commissioner to charge any additional fees that may be required, or credit any overpayment, to Deposit Account No. 14-1437, referencing Attorney Docket No.: 20079.0004.CNUS01.

In order to facilitate the resolution of any issues or questions presented by this paper, the Examiner may directly contact the undersigned by phone to further the discussion.

Dated: November 18, 2010

Respectfully submitted,

By /Michael S. Garrabrants/

Michael S. Garrabrants
Registration No. 51,230
NOVAK DRUCE & QUIGG LLP
555 Mission Street, 34th Floor
San Francisco, California 94105
Tel.: (415) 814-6161
Fax: (415) 814-6165

UNITED STATES PATENT AND TRADEMARK OFFICE

UNITED STATES DEPARTMENT OF COMMERCE
United States Patent and Trademark Office
Address: COMMISSIONER FOR PATENTS
P.O. Box 1450
Alexandria, Virginia 22313-1450
www.uspto.gov

APPLICATION NO.	FILING DATE	FIRST NAMED INVENTOR	ATTORNEY DOCKET NO.	CONFIRMATION NO.
12/888,360	09/22/2010	Frank T. Shum	20079.0004.CNUS01	4315

99483 7590 11/30/2010

Bridgelux, Inc. c/o Novak Druce + Quigg LLP
1000 Lousiana Street, Fifty- Third Floor
Houston, TX 77002

EXAMINER	
NGUYEN, DAO H	
ART UNIT	PAPER NUMBER
2818	

MAIL DATE	DELIVERY MODE
11/30/2010	PAPER

Please find below and/or attached an Office communication concerning this application or proceeding.

The time period for reply, if any, is set in the attached communication.

UNITED STATES PATENT AND TRADEMARK OFFICE

Commissioner for Patents
United States Patent and Trademark Office
P.O. Box 1450
Alexandria, VA 22313-1450
www.uspto.gov

Bridgelux, Inc. c/o Novak Druce + Quigg LLP
1000 Lousiana Street, Fifty- Third Floor
Houston TX 77002

In re Application of	:	
SHUM et al.	:	DECISION ON PETITION
Application No. 12/888,360	:	TO MAKE SPECIAL UNDER
Filed: September 22, 2010	:	THE GREEN TECHNOLOGY
Attorney Docket No. 20079.0004.CNUS01	:	PILOT PROGRAM

This is a decision on the petition under 37 CFR 1.102, filed on November 18, 2010, to make the above-identified application special under the pilot program for applications pertaining to Green Technologies as set forth 74 Federal Register Notice 64666 (December 8, 2009) and amended by 75 Federal Register Notice 28554 (May 21, 2010) and 75 Federal Register Notice 69049 (November 10, 2010).

The petition is **GRANTED**.

A grantable petition to make an application special under 37 CFR 1.102 and the pilot program as set forth in 74 FR 64666 must be directed to a nonprovisional application filed under 35 USC 111(a) or be a national stage entry under 35 USC 371, exclusive of any reissue applications.

In order to qualify for special status, the following requirements must be met. 1) The application must have no more than 3 independent claims and no more than 20 total claims. 2) The application must not contain any multiple dependent claims. 3) The petition must state the basis for seeking special status, i.e., the claimed invention either: A) materially enhances the quality of the environment or B) materially contributes to: i) the discovery or development of renewable energy resources, ii) the more efficient utilization and conservation of energy resources, or iii) greenhouse gas emission reduction. 4) If the disclosure is not clear on its face that the claimed invention materially contributes under category (A) or (B), the petition must be accompanied by a statement by the applicant, assignee, or an attorney/agent registered to practice before the Office explaining how the materiality standard is met. 5) A statement that applicant will agree to make an election without traverse in a telephonic interview if a restriction requirement is made by the examiner. 6) The petition to make special must be filed electronically. 7) The petition must be filed at least one day prior to the date that a first Office Action appears in the Patent Application Information Retrieval (PAIR) system. 8) The petition must be accompanied by a request for early publication in compliance with 37 CFR 1.219 and include the publication fee as set forth in 37 CFR 1.18(d).

The requirement for a fee for consideration of the petition to make special for applications pertaining to Green Technologies has been waived.

The instant petition complies with items 1 – 8 above. Accordingly, the above-identified application has been accorded "special" status.

Telephone inquires concerning this decision should be directed to Lee W. Young at 571-272-4549.

The application is being forwarded to the Technology Center Art Unit 2818 for action in its regular turn.

Lee W. Young
Quality Assurance Specialist
Technology Center 2800

Doc Code: PET.GREEN
Document Description: Petition for Green Tech Pilot

PTO/SB/420 (11-10)
Approved for use through 01/31/2011. OMB 0651-0062
U.S. Patent and Trademark Office; U. S. DEPARTMENT OF COMMERCE
Under the Paperwork Reduction Act of 1995, no persons are required to respond to a collection of information unless it displays a valid OMB control number.

PETITION TO MAKE SPECIAL UNDER THE GREEN TECHNOLOGY PILOT PROGRAM

Attorney Docket Number: 20079.0004.CNUS02	Application Number (if known): 12/888,379	Filing date: September 22, 2010
First Named Inventor: Frank T. Shum		
Title: METHODS OF LOW LOSS ELECTRODE STRUCTURES FOR LEDS		

APPLICANT HEREBY REQUESTS TO PARTICIPATE IN THE GREEN TECHNOLOGY PILOT PROGRAM FOR THE ABOVE-IDENTIFIED APPLICATION. See Instruction Sheet on page 2.

This petition must be timely filed electronically using the USPTO electronic filing system, EFS-Web.

1. By filing this petition:

   Applicant is requesting early publication: Applicant hereby requests early publication under 37 CFR 1.219 and the publication fee set forth in 37 CFR 1.18(d) accompanies this request.

2. By filing this petition: applicant is agreeing to make an election without traverse in a telephonic interview and elect an invention that meets the eligibility requirements for the Green Technology Pilot Program, if the Office determines that the claims are not obviously directed to a single invention. See Instruction Sheet.

3. This request is accompanied by statements of special status for the eligibility requirement.

4. The application contains no more than three (3) independent claims and twenty (20) total claims.

5. The application does not contain any multiple dependent claims.

6. Other attachments: _____

Signature /Michael S. Garrabrants/	Date November 18, 2010
Name (Print/Typed) Michael S. Garrabrants	Registration Number 51,230

Note: *Signatures of all the inventors or assignees of record of the entire interest or their representative(s) are required in accordance with 37 CFR 1.33 and 11.18. Please see 37 CFR 1.4(d) for the form of the signature. If necessary, submit multiple forms for more than one signature see below*.*

☐ *Total of ..... forms are submitted.

The information is required to obtain or retain a benefit by the public which is to file (and by the USPTO to process) an application. Confidentiality is governed by 35 U.S.C. 122 and 37 CFR 1.11 and 1.14. This collection is estimated to take 12 hours to complete, including gathering, preparing, and submitting the completed application form to the USPTO. Time will vary depending upon the individual case. Any comments on the amount of time you require to complete this form and/or suggestions for reducing this burden, should be sent to the Chief Information Officer, U.S. Patent and Trademark Office, U.S. Department of Commerce, P.O. Box 1450, Alexandria, VA 22313-1450. DO NOT SEND FEES OR COMPLETED FORMS TO THIS ADDRESS. **SEND TO: Commissioner for Patents, P.O. Box 1450, Alexandria, VA 22313-1450.**

If you need assistance in completing the form, call 1-800-PTO-9199 and select option 2.

Attorney Docket No.: 20079.0004.CNUS02
Client Ref. BL060001US-CON-3

IN THE UNITED STATES PATENT AND TRADEMARK OFFICE

In re Patent Application of: Frank T. Shum et al.	Conf. No.: 4352
Serial No.: 12/888,379	Art Unit: 2818
Filing Date: September 22, 2010	Examiner: not yet assigned
Title: METHODS OF LOW LOSS ELECTRODE STRUCTURES FOR LEDS	

STATEMENT UNDER THE GREEN TECHNOLOGY PILOT PROGRAM

Commissioner for Patents
P.O. Box 1450
Alexandria, Virginia 22313-1450

Dear Sir:

The basis for this Petition to Make Special Under the Green Technology Pilot Program is energy conservation. This invention contributes to energy conservation because the invention facilitates the manufacture and/or use of light emitting diodes (LEDs) that use substantially less energy than contemporary incandescent and fluorescent lights. Because the invention allows reduced electrical energy consumption, the invention provides for more efficient utilization and conservation of energy resources. Thus, it is respectfully submitted that the materiality standard is met.

****

The undersigned representative authorizes the Commissioner to charge any additional fees that may be required, or credit any overpayment, to Deposit Account No. 14-1437, referencing Attorney Docket No.: 20079.0004.CNUS02.

In order to facilitate the resolution of any issues or questions presented by this paper, the Examiner may directly contact the undersigned by phone to further the discussion.

Dated: November 18, 2010

Respectfully submitted,

By /Michael S. Garrabrants/

Michael S. Garrabrants
Registration No. 51,230
NOVAK DRUCE & QUIGG LLP
555 Mission Street, 34th Floor
San Francisco, California 94105
Tel.: (415) 814-6161
Fax: (415) 814-6165

UNITED STATES PATENT AND TRADEMARK OFFICE

UNITED STATES DEPARTMENT OF COMMERCE
United States Patent and Trademark Office
Address: COMMISSIONER FOR PATENTS
P.O. Box 1450
Alexandria, Virginia 22313-1450
www.uspto.gov

APPLICATION NO.	FILING DATE	FIRST NAMED INVENTOR	ATTORNEY DOCKET NO.	CONFIRMATION NO.
12/888,379	09/22/2010	Frank T. Shum	20079.0004.CNUS02	4352

99483 7590 11/30/2010

Bridgelux, Inc. c/o Novak Druce + Quigg LLP
1000 Lousiana Street, Fifty- Third Floor
Houston, TX 77002

EXAMINER	
ART UNIT	PAPER NUMBER
2818	

MAIL DATE	DELIVERY MODE
11/30/2010	PAPER

Please find below and/or attached an Office communication concerning this application or proceeding.

The time period for reply, if any, is set in the attached communication.

UNITED STATES PATENT AND TRADEMARK OFFICE

Commissioner for Patents
United States Patent and Trademark Office
P.O. Box 1450
Alexandria, VA 22313-1450
www.uspto.gov

Bridgelux, Inc. c/o Novak Druce + Quigg LLP
1000 Lousiana Street, Fifty- Third Floor
Houston TX 77002

In re Application of	:	
SHUM et al.	:	DECISION ON PETITION
Application No. 12/888,379	:	TO MAKE SPECIAL UNDER
Filed: September 22, 2010	:	THE GREEN TECHNOLOGY
Attorney Docket No. 20079.0004.CNUS02	:	PILOT PROGRAM

This is a decision on the petition under 37 CFR 1.102, filed on November 18, 2010, to make the above-identified application special under the pilot program for applications pertaining to Green Technologies as set forth 74 Federal Register Notice 64666 (December 8, 2009) and amended by 75 Federal Register Notice 28554 (May 21, 2010) and 75 Federal Register Notice 69049 (November 10, 2010).

The petition is **GRANTED**.

A grantable petition to make an application special under 37 CFR 1.102 and the pilot program as set forth in 74 FR 64666 must be directed to a nonprovisional application filed under 35 USC 111(a) or be a national stage entry under 35 USC 371, exclusive of any reissue applications.

In order to qualify for special status, the following requirements must be met. 1) The application must have no more than 3 independent claims and no more than 20 total claims. 2) The application must not contain any multiple dependent claims. 3) The petition must state the basis for seeking special status, i.e., the claimed invention either: A) materially enhances the quality of the environment or B) materially contributes to: i) the discovery or development of renewable energy resources, ii) the more efficient utilization and conservation of energy resources, or iii) greenhouse gas emission reduction. 4) If the disclosure is not clear on its face that the claimed invention materially contributes under category (A) or (B), the petition must be accompanied by a statement by the applicant, assignee, or an attorney/agent registered to practice before the Office explaining how the materiality standard is met. 5) A statement that applicant will agree to make an election without traverse in a telephonic interview if a restriction requirement is made by the examiner. 6) The petition to make special must be filed electronically. 7) The petition must be filed at least one day prior to the date that a first Office Action appears in the Patent Application Information Retrieval (PAIR) system. 8) The petition must be accompanied by a request for early publication in compliance with 37 CFR 1.219 and include the publication fee as set forth in 37 CFR 1.18(d).

The requirement for a fee for consideration of the petition to make special for applications pertaining to Green Technologies has been waived.

The instant petition complies with items 1 – 8 above. Accordingly, the above-identified application has been accorded "special" status.

Telephone inquires concerning this decision should be directed to Lee W. Young at 571-272-4549.

The application is being forwarded to the Technology Center Art Unit 2818 for action in its regular turn.

Lee W. Young
Quality Assurance Specialist
Technology Center 2800

UNITED STATES PATENT AND TRADEMARK OFFICE

Commissioner for Patents
United States Patent and Trademark Office
P.O. Box 1450
Alexandria, VA 22313-1450
www.uspto.gov

Date Mailed September 19, 2011

Patent No. :7999415
Inventor :Christopher Vance Beckman,
Patent Issued :Aug. 16, 2011
Title :ELECTRONIC LEAKAGE REDUCTION TECHNIQUES

Re: Request for Certificate of Correction

Consideration has been given your request for the issuance of a certificate of correction for the above-identified patent under the provisions of Rule(s) 1.322.

Inspection of the application for the patent reveals that in connection with the alleged error pertaining to the title page, item (63) and in Col. 1, lines 7-12; the requested change as presented in applicants request is unwarranted as found in the records of the Patent and Trademark Office. See MPEP 1.78(a)(3).

In view of the foregoing applicants request in this matter is hereby denied. Any telephone inquiry concerning this communication should be directed to Ms. A. Green at (571) 272-9005.

Mary Diggs, Supervisor
Decisions & Certificates
of Correction Branch
(703) 756-1580 or (571) 272- 9005

Chrisopher Beckman
1383 6th Avenue, Suite 226
New York, NY 10019

/arg

UNITED STATES PATENT AND TRADEMARK OFFICE

Commissioner for Patents
United States Patent and Trademark Office
P.O. Box 1450
Alexandria, VA 22313-1450
www.uspto.gov

ALTORR CORPORATION
8076 – 114TH AVE. NORTH
SUITE 400
LARGO, FL 33773

MAILED
NOV 17 2011
OFFICE OF PETITIONS

In re Application of :
Bradford A. Clough :
Application No. 12/888,438 : DECISION ON PETITION
Filed: September 23, 2010 :
Attorney Docket No. Altorr.0005 :

This is a decision on the petition under the unintentional provisions of 37 CFR 1.137(b), filed October 11, 2011, to revive the above-identified application.

The application became abandoned for failure to reply in a timely manner to the Notice of Incomplete Reply (Notice), mailed October 7, 2010, which continued to from the original Notice to File Missing Parts (Notice) mailed October 7, 2010. The Notice to File Missing Parts set a period for reply of two (2) months from the mail date of the Notice. No extensions of time under the provisions of 37 CFR 1.136(a) were obtained. Accordingly, the application became abandoned on December 8, 2010.

The petition satisfies the requirements of 37 CFR 1.137(b) in that petitioner has supplied (1) the reply in the form of an oath/declaration, (2) the petition fee of $930, and (3) a proper statement of unintentional delay.

In view of the above, the petition is **GRANTED**.

An extension of time under 37 CFR 1.136 must be filed prior to the expiration of the maximum extendable period for reply. See In re Application of S., 8 USPQ2d 1630, 1631 (Comm'r Pats. 1988). Since the $75 extension of time fee submitted with the petition on October 11, 2011 was subsequent to the maximum extendable period for reply, this fee is unnecessary and will be credited to petitioner's credit card.

Telephone inquiries concerning this decision should be directed to undersigned at (571) 272-1642. All other inquiries concerning the examination or status of this application should be directed to the Office of Patent Application Processing at their hotline 571-272-4000.

This application is being referred to the Office of Patent Application Processing for pre-examination processing of the reply received December 14, 2010.

April M. Wise
Petitions Examiner
Office of Petitions

UNITED STATES PATENT AND TRADEMARK OFFICE

Commissioner for Patents
United States Patent and Trademark Office
P.O. Box 1450
Alexandria, VA 22313-1450
www.uspto.gov

PARKER-HANNIFIN CORPORATION
HUNTER MOLNAR BAKER MORGAN
6035 PARKLAND BOULEVARD
CLEVELAND OH 44124-4141

MAILED

MAR 24 2011

OFFICE OF PETITIONS

In re Application of
Daniel L. Bantz
Application No. 12/888,501
Filed: September 23, 2010
Attorney Docket No: **2802-165-029**

: DECISION ON PETITION

This is a decision on the petition, filed September 23, 2010 under 37 CFR 1.137(b) to revive the instant nonprovisional application for failure to timely notify the U.S. Patent and Trademark (USPTO) of the filing of an application in a foreign country, or under a multinational treaty that requires publication of applications eighteen months after filing. *See* 37 CFR 1.137(f).

The petition is **DISMISSED**.

Any request for reconsideration of this decision must be submitted within TWO (2) MONTHS from the mail date of this decision. Extensions of time under 37 CFR 1.136(a) are permitted. The reconsideration request should include a cover letter entitled "Renewed Petition under 37 CFR 1.137(b)." This is **not** final agency action within the meaning of 5 U.S.C. § 704. No additional petition fee is required.

Petitioner states that the instant non-provisional application is the subject of an application filed in a foreign country and the U. S. Patent and Trademark Office was unintentionally not notified of this filing within 45 days subsequent to the filing of the subject application in a foreign country. While the petition seeks revival, petitioner has not provided the exact filing date of the foreign application or applications. Before a proper determination on the merits of the petition can be decided, petitioner must supply the filing date of the foreign application(s).

Further correspondence with respect to this matter should be addressed as follows:

By mail: Mail Stop PETITION
Commissioner for Patents

Post Office Box 1450
Alexandria, VA 22313-1450

By Fax: (571) 273-8300
ATTN: Office of Petitions

Telephone inquiries related to this decision should be directed to the undersigned Petitions Attorney at (571) 272-3212.

Patricia Faison-Ball
Senior Petitions Attorney
Office of Petitions

UNITED STATES PATENT AND TRADEMARK OFFICE

Commissioner for Patents
United States Patent and Trademark Office
P.O. Box 1450
Alexandria, VA 22313-1450
www.uspto.gov

PARKER-HANNIFIN CORPORATION
HUNTER MOLNAR BAKER MORGAN
6035 PARKLAND BOULEVARD
CLEVELAND OH 44124-4141

MAILED

JUL 05 2011

OFFICE OF PETITIONS

In re Application of :
Daniel L. Bantz :
Application No. 12/888,501 : DECISION ON PETITION
Filed: September 23, 2010 :
Attorney Docket No: **2802-165-029** :

This is a decision on the renewed petition, filed June 10, 2011 under 37 CFR 1.137(b) to revive the instant nonprovisional application.

The petition is **DISMISSED** as involving moot issues .

While the instant petition seeks to revive the application, petitioner is advised that the application is not abandoned.

The instant application claims priority to PCT/US2008/005802. If it is petitioner's intention to revive the PCT application for purposes of copendency with the present application, it is suggested that a petition to revive be filed in that matter.

As the instant application is not abandoned, no further action is warrented from the Office of Petitions and no further action will be taken.

This matter will be referred to Technology Center 3679 for examination in due course.

Telephone inquiries related to this decision should be directed to the undersigned Petitions Attorney at (571) 272-3212.

Patricia Faison-Ball
Senior Petitions Attorney
Office of Petitions

UNITED STATES PATENT AND TRADEMARK OFFICE

Commissioner for Patents
United States Patent and Trademark Office
P.O. Box 1450
Alexandria, VA 22313-1450
www.uspto.gov

MAILED

MAR 23 2012

PCT LEGAL ADMINISTRATION

Parker-Hannifin Corporation
Hunter Molnar Baker Morgan
6035 Parkland Boulevard
Cleveland, OH 44124-4141

In re Application of:
Daniel L. Bantz
U.S. Application No. 12/888,501
Filing Date: September 23, 2010
Attorney Docket No.: 2802-165-029
For: HIGH PRESSURE MAKE AND BRAKE FLUIDIC SEAL SYSTEM

DECISION ON PETITION

This is a decision on the petition under 37 CFR 1.78(a)(3) filed March 08, 2012 to accept an unintentionally delayed claim under 35 U.S.C. § 120 and 365(c) for the benefit of priority to the prior-filed international application set forth in the amendment filed September 15, 2011. Because the application claims priority to a prior filed provisional application, the petition is also being treated as a petition under 37 CFR 1.78(a)(6) to accept an unintentionally delayed claim under 35 U.S.C. §119(e) for the benefit of the prior-filed provisional application.

The petitions are GRANTED.

A petition for acceptance of a claim for late priority under 37 CFR §§ 1.78(a)(3) and 1.78(a)(6) is only applicable to those applications filed on or after November 29, 2000. Further, the petition is appropriate only after the expiration of the period specified in 37 CFR §§ 1.78(a)(2)(ii) and 1.78(a)(5)(ii). In addition, the petition under 37 CFR §§ 1.78(a)(3) and 1.78(a)(6) must be accompanied by:

(1) the reference required by 35 U.S.C. §§ 120 and 119(e) and 37 CFR §§ 1.78(a)(2)(i) and 1.78(a)(5)(i) of the prior-filed application, unless previously submitted;
(2) the surcharge set forth in § 1.17(t); and
(3) a statement that the entire delay between the date the claim was due under 37 CFR §§ 1.78(a)(2)(ii) and 1.78(a)(5)(ii) and the date the claim was filed was unintentional. The Commissioner may require additional where there is a question whether the delay was unintentional.

The petition complies with the requirements for a grantable petition under 37 CFR §§1.78(a)(3) and 1.78(a)(6) in that (1) a proper reference to the prior-filed applications has been included in an amendment to the first sentence of the specification, as provided by 37 CFR §§ 1.78(a)(2)(iii) and 1.78(a)(5)(iii); (2) the surcharge fee required by 37 CFR 1.17(t) has been submitted; and (3) applicant's statement that "the entire delay between the date the claim was due under 37 CFR 1.78(a)(2)(ii) of this section and the date the claim was filed was unintentional" is construed as meaning that "the entire delay between the date the claim was due under 37 CFR 1.78(a)(3) and 1.78(a)(6) and the date the claim was filed was unintentional." If this is incorrect, petitioner must immediately notify the Office of PCT Legal Administration. As construed, petitioner's statement satisfied item (3) above. Accordingly, having found that the petition for acceptance of an unintentionally delayed claim for the benefit of priority under 35 U.S.C. §§ 120 and 119(e) to the prior-filed applications satisfies the conditions of 37 CFR §§ 1.78(a)(3) and 1.78(a)(6), the petition is granted.

The granting of the petition to accept the delayed benefit claim to the prior-filed applications under 37 CFR §§ 1.78(a)(3) and 1.78(a)(6) should not be construed as meaning that the instant application is entitled to the benefit of the filing date of the prior-filed applications. In order for the instant application to be entitled to the benefit of the prior-filed applications, all other requirements under 35 U.S.C. §120 and 1.78(a)(1) and (a)(2) and under 35 U.S.C. §119(e) and 37 CFR 1.78(a)(4) and (a)(5) must be met. Accordingly, the examiner will, in due course, consider this benefit claim and determine whether the instant application is entitled to the benefit of the earlier filing date.

Any questions concerning this matter may be directed to Anthony Smith at (571) 272-3298.

A corrected Filing Receipt, which includes the benefit claim to the prior-filed international application and provisional application, accompanies this decision on petition.

Any inquiries concerning this decision may be directed to Anthony Smith, Attorney Advisor, at (571) 272-3298. All other inquiries concerning either the examination procedures or status of the application should be directed to the Technology Center.

Boris Milef
Legal Examiner
PCT Legal Administration

UNITED STATES PATENT AND TRADEMARK OFFICE

UNITED STATES DEPARTMENT OF COMMERCE
United States Patent and Trademark Office
Address: COMMISSIONER FOR PATENTS
P.O. Box 1450
Alexandria, Virginia 22313-1450
www.uspto.gov

APPLICATION NUMBER	FILING or 371(c) DATE	GRP ART UNIT	FIL FEE REC'D	ATTY.DOCKET.NO	TOT CLAIMS	IND CLAIMS
12/888,501	09/23/2010	3679	1090	2802-165-029	18	3

CONFIRMATION NO. 4553

CORRECTED FILING RECEIPT

24045
PARKER-HANNIFIN CORPORATION
HUNTER MOLNAR BAKER MORGAN
6035 PARKLAND BOULEVARD
CLEVELAND, OH 44124-4141

OC000000053286159

Date Mailed: 03/22/2012

Receipt is acknowledged of this non-provisional patent application. The application will be taken up for examination in due course. Applicant will be notified as to the results of the examination. Any correspondence concerning the application must include the following identification information: the U.S. APPLICATION NUMBER, FILING DATE, NAME OF APPLICANT, and TITLE OF INVENTION. Fees transmitted by check or draft are subject to collection. Please verify the accuracy of the data presented on this receipt. **If an error is noted on this Filing Receipt, please submit a written request for a Filing Receipt Correction. Please provide a copy of this Filing Receipt with the changes noted thereon. If you received a "Notice to File Missing Parts" for this application, please submit any corrections to this Filing Receipt with your reply to the Notice. When the USPTO processes the reply to the Notice, the USPTO will generate another Filing Receipt incorporating the requested corrections**

Applicant(s)

DANIEL L. BANTZ, Brookline, NH;

Power of Attorney: None

Domestic Priority data as claimed by applicant

This application is a CON of PCT/US2008/005802 05/06/2008
which claims benefit of 60/917,084 05/10/2007

Foreign Applications (You may be eligible to benefit from the **Patent Prosecution Highway** program at the USPTO. Please see http://www.uspto.gov for more information.)

If Required, Foreign Filing License Granted: 10/06/2010

The country code and number of your priority application, to be used for filing abroad under the Paris Convention, is **US 12/888,501**

Projected Publication Date: 03/29/2012

Non-Publication Request: No

Early Publication Request: No

Title

HIGH PRESSURE MAKE AND BREAK FLUIDIC SEAL SYSTEM

Preliminary Class

285

PROTECTING YOUR INVENTION OUTSIDE THE UNITED STATES

Since the rights granted by a U.S. patent extend only throughout the territory of the United States and have no effect in a foreign country, an inventor who wishes patent protection in another country must apply for a patent in a specific country or in regional patent offices. Applicants may wish to consider the filing of an international application under the Patent Cooperation Treaty (PCT). An international (PCT) application generally has the same effect as a regular national patent application in each PCT-member country. The PCT process **simplifies** the filing of patent applications on the same invention in member countries, but **does not result** in a grant of "an international patent" and does not eliminate the need of applicants to file additional documents and fees in countries where patent protection is desired.

Almost every country has its own patent law, and a person desiring a patent in a particular country must make an application for patent in that country in accordance with its particular laws. Since the laws of many countries differ in various respects from the patent law of the United States, applicants are advised to seek guidance from specific foreign countries to ensure that patent rights are not lost prematurely.

Applicants also are advised that in the case of inventions made in the United States, the Director of the USPTO must issue a license before applicants can apply for a patent in a foreign country. The filing of a U.S. patent application serves as a request for a foreign filing license. The application's filing receipt contains further information and guidance as to the status of applicant's license for foreign filing.

Applicants may wish to consult the USPTO booklet, "General Information Concerning Patents" (specifically, the section entitled "Treaties and Foreign Patents") for more information on timeframes and deadlines for filing foreign patent applications. The guide is available either by contacting the USPTO Contact Center at 800-786-9199, or it can be viewed on the USPTO website at http://www.uspto.gov/web/offices/pac/doc/general/index.html.

For information on preventing theft of your intellectual property (patents, trademarks and copyrights), you may wish to consult the U.S. Government website, http://www.stopfakes.gov. Part of a Department of Commerce initiative, this website includes self-help "toolkits" giving innovators guidance on how to protect intellectual property in specific countries such as China, Korea and Mexico. For questions regarding patent enforcement issues, applicants may call the U.S. Government hotline at 1-866-999-HALT (1-866-999-4158).

LICENSE FOR FOREIGN FILING UNDER

Title 35, United States Code, Section 184

Title 37, Code of Federal Regulations, 5.11 & 5.15

GRANTED

The applicant has been granted a license under 35 U.S.C. 184, if the phrase "IF REQUIRED, FOREIGN FILING LICENSE GRANTED" followed by a date appears on this form. Such licenses are issued in all applications where the conditions for issuance of a license have been met, regardless of whether or not a license may be required as

set forth in 37 CFR 5.15. The scope and limitations of this license are set forth in 37 CFR 5.15(a) unless an earlier license has been issued under 37 CFR 5.15(b). The license is subject to revocation upon written notification. The date indicated is the effective date of the license, unless an earlier license of similar scope has been granted under 37 CFR 5.13 or 5.14.

This license is to be retained by the licensee and may be used at any time on or after the effective date thereof unless it is revoked. This license is automatically transferred to any related applications(s) filed under 37 CFR 1.53(d). This license is not retroactive.

The grant of a license does not in any way lessen the responsibility of a licensee for the security of the subject matter as imposed by any Government contract or the provisions of existing laws relating to espionage and the national security or the export of technical data. Licensees should apprise themselves of current regulations especially with respect to certain countries, of other agencies, particularly the Office of Defense Trade Controls, Department of State (with respect to Arms, Munitions and Implements of War (22 CFR 121-128)); the Bureau of Industry and Security, Department of Commerce (15 CFR parts 730-774); the Office of Foreign AssetsControl, Department of Treasury (31 CFR Parts 500+) and the Department of Energy.

NOT GRANTED

No license under 35 U.S.C. 184 has been granted at this time, if the phrase "IF REQUIRED, FOREIGN FILING LICENSE GRANTED" DOES NOT appear on this form. Applicant may still petition for a license under 37 CFR 5.12, if a license is desired before the expiration of 6 months from the filing date of the application. If 6 months has lapsed from the filing date of this application and the licensee has not received any indication of a secrecy order under 35 U.S.C. 181, the licensee may foreign file the application pursuant to 37 CFR 5.15(b).

SelectUSA

The United States represents the largest, most dynamic marketplace in the world and is an unparalleled location for business investment, innovation and commercialization of new technologies. The USA offers tremendous resources and advantages for those who invest and manufacture goods here. Through SelectUSA, our nation works to encourage, facilitate, and accelerate business investment. To learn more about why the USA is the best country in the world to develop technology, manufacture products, and grow your business, visit SelectUSA.gov.

UNITED STATES PATENT AND TRADEMARK OFFICE

Commissioner for Patents
United States Patent and Trademark Office
P.O. Box 1450
Alexandria, VA 22313-1450
www.uspto.gov

In re Application of
WAI MUN LEE

Application No. 12888569

Filed: September 23,2010

Attorney Docket No. 091708-0001

:
:
:DECISION ON PETITION TO MAKE SPECIAL
:UNDER 37 CFR 1.102(c)(1)
:

This is a decision on the electronic petition under 37 CFR 1.102 (c)(1), filed 15-FEB-2011 to make the above-identified application special based on applicant's age as set forth in MPEP § 708.02, Section IV.

The petition is **GRANTED**.

A grantable petition to make an application special under 37 CFR 1.102(c)(1), MPEP § 708.02, Section IV: Applicant's Age must include a statement by applicant or a registered practitioner having evidence that applicant is at least 65 years of age. No fee is required.

Accordingly, the above-identified application has been accorded "special" status and will be taken up for action by the examiner upon the completion of all pre-examination processing.

Telephone inquiries concerning this electronic decision should be directed to the Electronic Business Center at 866-217-9197.

All other inquiries concerning either the examination or status of the application should be directed to the Technology Center.

UNITED STATES PATENT AND TRADEMARK OFFICE

Commissioner for Patents
United States Patent and Trademark Office
P.O. Box 1450
Alexandria, VA 22313-1450
www.uspto.gov

MAILED

SEP 21 2011

OFFICE OF PETITIONS

MISSION/BSTZ
BLAKELY SOKOLOFF TAYLOR & ZAFMAN LLP
1279 OAKMEAD PARKWAY
SUNNYVALE CA 94085-4040

In re Application of :
Kolar, et al. :
Application No. 12/888,575 : ON PETITION
Filed: September 23, 2010 :
Attorney Docket No. 42P35479 :

This is a decision on the petition under the unintentional provisions of 37 CFR 1.137(b), filed September 16, 2011, to revive the above-identified application.

The petition is GRANTED.

The application became abandoned December 14, 2010 for failure to timely submit a proper reply to the Notice of File Missing Parts (Notice) mailed October 13, 2010. The Notice set a two month shortened statutory period of time for reply. Notice of Abandonment was mailed June 21, 2011.

A grantable petition under 37 CFR 1.137(b) must be accompanied by: (1) the required reply, unless previously filed; (2) the petition fee as set forth in 37 CFR 1.17(m); (3) a statement that the entire delay in filing the required reply from the due date for the reply until the filing of a grantable petition pursuant to 37 CFR 1.137(b) was unintentional; and (4) any terminal disclaimer (and fee as set forth in 37 CFR 1.20(d)) required by 37 CFR 1.137(d): Where there is a question as to whether either the abandonment or the delay in filing a petition under 37 CFR 1.137 was unintentional, the Director may require additional information. See MPEP 711.03(c)(II)(C) and (D).

The instant petition has been carefully reviewed and found in compliance with the requirements set forth above.

This application is being directed to the Office of Patent Application Processing for further processing.

/ALESIA M. BROWN/

Alesia M. Brown
Attorney Advisor
Office of Petitions

UNITED STATES PATENT AND TRADEMARK OFFICE

Commissioner for Patents
United States Patent and Trademark Office
P.O. Box 1450
Alexandria, VA 22313-1450
www.uspto.gov

In re Application of
Mark A. Raymond

Application No. 12888584

Filed:

Attorney Docket No. 50383-00047

:
:
:DECISION ON PETITION TO MAKE SPECIAL
:UNDER 37 CFR 1.102(c)(1)
:

This is a decision on the electronic petition under 37 CFR 1.102 (c)(1), filed 23-SEP-2010 to make the above-identified application special based on applicant's age as set forth in MPEP § 708.02, Section IV.

The petition is **GRANTED**.

A grantable petition to make an application special under 37 CFR 1.102(c)(1), MPEP § 708.02, Section IV: Applicant's Age must include a statement by applicant or a registered practitioner having evidence that applicant is at least 65 years of age. No fee is required.

Accordingly, the above-identified application has been accorded "special" status and will be taken up for action by the examiner upon the completion of all pre-examination processing.

Telephone inquiries concerning this electronic decision should be directed to the Electronic Business Center at 866-217-9197.

All other inquiries concerning either the examination or status of the application should be directed to the Technology Center.

Doc Code: PPH.PCT.652
Document Description: Petition to make special under PCT-Patent Pros Hwy

PTO/SB/20PCT-KR (06-10)
Approved for use through 01/31/2012. OMB 0651-0058
U.S. Patent and Trademark Office; U. S. DEPARTMENT OF COMMERCE
Under the Paperwork Reduction Act of 1995, no persons are required to respond to a collection of information unless it displays a valid OMB control number.

REQUEST FOR PARTICIPATION IN THE PATENT COOPERATION TREATY - PATENT PROSECUTION HIGHWAY (PCT-PPH) PILOT PROGRAM BETWEEN THE KOREAN INTELLECTUAL PROPERTY OFFICE (KIPO) AND THE USPTO

Application No:	12888607	Filing date:	9.23.2010
First Named Inventor:	Stephen Michael Greci		
Title of the Invention:	Sand Control Screen Assembly having a Mechanically Attached Screen Jacket		

THIS REQUEST FOR PARTICIPATION IN THE PCT-PPH PILOT PROGRAM ALONG WITH THE REQUIRED DOCUMENTS MUST BE SUBMITTED VIA EFS-WEB. INFORMATION REGARDING EFS-WEB IS AVAILABLE AT HTTP://WWW.USPTO.GOV/EBC/EFS_HELP.HTML

APPLICANT HEREBY REQUESTS PARTICIPATION IN THE PCT-PPH PROGRAM AND PETITIONS TO MAKE THE ABOVE-IDENTIFIED APPLICATION SPECIAL UNDER THE PCT-PPH PROGRAM.

The above-identified application is (1) a national stage entry of the corresponding PCT application, or (2) a national stage entry of another PCT application which claims priority to the corresponding PCT application, or (3) a national application that claims domestic/ foreign priority to the corresponding PCT application, or (4) a national application which forms the basis for the priority claim in the corresponding PCT application, or (5) a continuing application of a U.S. application that satisfies one of (1) to (4) above, or (6) a U.S. application that claims domestic benefit to a U.S. provisional application which forms the basis for the priority claim in the corresponding PCT application.

The corresponding PCT application number(s) is/are: PCT/US2011/049471

The international filing date of the corresponding PCT application(s) is/are: 8.27.2011

I. List of Required Documents:

a. **A copy of the latest international work product (WO/ISA, WO/IPEA, or IPER) in the above–identified corresponding PCT application(s)**

☑ Is attached.

☐ Is not attached because the document is already in the U.S. application.

b. **A copy of all claims which were indicated as having novelty, inventive step and industrial applicability in the above-identified corresponding PCT application(s).**

☑ Is attached.

☐ Is not attached because the document is already in the U.S. application.

c. **English translations of the documents in a. and b. above are attached (if the documents are not in the English language). A statement that the English translation is accurate is attached for the document in b. above.**

This collection of information is required by 35 U.S.C. 119, 37 CFR 1.55, and 37 CFR 1.102(d). The information is required to obtain or retain a benefit by the public, which is to file (and by the USPTO to process) an application. Confidentiality is governed by 35 U.S.C. 122 and 37 CFR 1.11 and 1.14. This collection is estimated to take 2 hours to complete, including gathering, preparing, and submitting the completed application form to the USPTO. Time will vary depending upon the individual case. Any comments on the amount of time you require to complete this form and/or suggestions for reducing this burden should be sent to the Chief Information Officer, U.S. Patent and Trademark Office, U.S. Department of Commerce, P.O. Box 1450, Alexandria, VA 22313-1450. DO NOT SEND FEES OR COMPLETED FORMS TO THIS ADDRESS.

PTO/SB/20PCT-KR (06-10)
Approved for use through 01/31/2012. OMB 0651-0058
U.S.Patent and Trademark Office; U.S. DEPARTMENT OF COMMERCE
Under the Paperwork Reduction Act of 1995, no persons are required to respond to a collection of information unless it displays a valid OMB control number.

REQUEST FOR PARTICIPATION IN THE PCT-PPH PILOT PROGRAM BETWEEN THE KIPO AND THE USPTO

(continued)

Application No.:	12888607
First Named Inventor:	Stephen Michael Greci

d. **(1) An information disclosure statement listing the documents cited in the international work products (ISR, WO/ISA, WO/IPEA, IPER) of the corresponding PCT application.**

☐ Is attached

☑ Has already been filed in the above-identified U.S. application on 10.11.2011 and 2.19.2012

(2) Copies of all documents (except) for U.S. patents or U.S. patent application publications)

☐ Are attached.

☑ Have already been filed in the above-identified U.S. application on 2.19.2012

II. Claims Correspondence Table:

Claims in US Application	Patentable Claims in the corresponding PCT Application	Explanation regarding the correspondence
1-2		
3	3	Identical Correspondence
4-5		
6	6	Identical Correspondence
7		
8-10	8-10	Identical Correspondence
11-12		
13-15	13-15	Identical Correspondence
16-17		
18-20	18-20	Identical Correspondence

III. All the claims in the US application sufficiently correspond to the patentable claims in the corresponding PCT application.

Signature /Lawrence R. Youst/	Date 4.8.2012
Name (Print/Typed) Lawrence R. Youst	Registration Number 38795

PATENT COOPERATION TREATY

From the
INTERNATIONAL SEARCHING AUTHORITY

To:
YOUST LAWRENCE R.

LAWRENCE YOUST PLLC ONE WATERWAY COURT,
SUITE 3B THE WOODLANDS TX 77380 USA

PCT

WRITTEN OPINION OF THE INTERNATIONAL SEARCHING AUTHORITY

(PCT Rule 43bis.1)

Date of mailing *(day/month/year)*	**10 FEBRUARY 2012 (10.02.2012)**
Applicant's or agent's file reference 10-033156 U1	**FOR FURTHER ACTION** See paragraph 2 below

International application No.	International filing date *(day/month/year)*	Priority date *(day/month/year)*
PCT/US2011/049471	**27 AUGUST 2011 (27.08.2011)**	23 SEPTEMBER 2010 (23.09.2010)

International Patent Classification (IPC) or both national classification and IPC

E21B 43/08(2006.01)i, E21B 43/10(2006.01)i

Applicant

HALLIBURTON ENERGY SERVICES, INC. et al

1. This opinion contains indications relating to the following items:

- ☒ Box No. I Basis of the opinion
- ☐ Box No. II Priority
- ☐ Box No. III Non-establishment of opinion with regard to novelty, inventive step and industrial applicability
- ☐ Box No. IV Lack of unity of invention
- ☒ Box No. V Reasoned statement under Rule 43bis.1(a)(i) with regard to novelty, inventive step or industrial applicability; citations and explanations supporting such statement
- ☐ Box No. VI Certain documents cited
- ☐ Box No. VII Certain defects in the international application
- ☐ Box No. VIII Certain observations on the international application

2. **FURTHER ACTION**

If a demand for international preliminary examination is made, this opinion will be considered to be a written opinion of the International Preliminary Examining Authority ("IPEA") except that this does not apply where the applicant chooses an Authority other than this one to be the IPEA and the chosen IPEA has notified the International Bureau under Rule 66.1bis(b) that written opinions of this International Searching Authority will not be so considered.

If this opinion is, as provided above, considered to be a written opinion of the IPEA, the applicant is invited to submit to the IPEA a written reply together, where appropriate, with amendments, before the expiration of 3 months from the date of mailing of Form PCT/ISA/220 or before the expiration of 22 months from the priority date, whichever expires later.
For further options, see Form PCT/ISA/220.

Name and mailing address of the ISA/KR	Date of completion of this opinion	Authorized officer
Korean Intellectual Property Office Government Complex-Daejeon, 189 Cheongsa-ro, Seo-gu, Daejeon 302-701, Republic of Korea Facsimile No. 82-42-472-7140	09 FEBRUARY 2012 (09.02.2012)	BAHNG, Seung Hoon Telephone No.82-42-481-8444

WRITTEN OPINION OF THE INTERNATIONAL SEARCHING AUTHORITY

International application No.
PCT/US2011/049471

Box No. I Basis of this opinion

1. With regard to the **language**, this opinion has been established on the basis of :

   ☒ the international application in the language in which it was filed

   ☐ a translation of the international application into _____, which is the language of a translation furnished for the purposes of international search (Rules 12.3(a) and 23.1(b))

2. ☐ This opinion has been established taking into account the **rectification of an obvious mistake** authorized by or notified to this Authority under Rule 91 (Rule 43*bis*.1(a))

3. With regard to any **nucleotide and/or amino acid sequence** disclosed in the international application, this opinion has been established on the basis of:

   a. a sequence listing filed or furnished
      ☐ on paper
      ☐ in electronic form

   b. time of filing or furnishing
      ☐ contained in the international application as filed.
      ☐ filed together with the international application in electronic form.
      ☐ furnished subsequently to this Authority for the purposes of search.

4. ☐ In addition, in the case that more than one version or copy of a sequence listing has been filed or furnished, the required statements that the information in the subsequent or additioanl copies is identical to that in the application as filed or does not go beyond the application as filed, as appropriate, were furnished.

5. Additional comments:

WRITTEN OPINION OF THE INTERNATIONAL SEARCHING AUTHORITY

International application No.
PCT/US2011/049471

Box No. V Reasoned statement under Rule 43bis.1(a)(i) with regard to novelty, inventive step or industrial applicability; citations and explanations supporting such statement

1. Statement

Novelty (N)	Claims	3,6,8-10,13-15,18-20	YES
	Claims	1-2,4-5,7,11-12,16-17	NO
Inventive step (IS)	Claims	3,6,8-10,13-15,18-20	YES
	Claims	1-2,4-5,7,11-12,16-17	NO
Industrial applicability (IA)	Claims	1-20	YES
	Claims	NONE	NO

2. Citations and explanations :

Reference is made to the following documents:

D1: US 2003-0056959 A1 (ANA M. CASTANO-MEARS et al.) 27 March 2003
D2: US 05842522 A (ECHOLS; RALPH H. et al.) 01 December 1998
D3: US 2003-0029614 A1 (DONALD H. MICHEL) 13 February 2003
D4: US 2002-0129935 A1 (ANA M. CASTANO-MEARS et al.) 19 September 2002

1. Novelty and Inventive Step

1.1 Independent Claims 1, 12, 17
D1, which is considered to represent the most relevant state of the art, discloses the apparatus comprising : a) a base pipe, b) a screen jacket assembly having a screen and a shroud, c) rings connecting the screen shroud to the base pipe. As all of the features of claims 1, 12 and 17 are disclosed in D1, these claims are anticipated by D1. Therefore, claims 1, 12 and 17 lack novelty under PCT Article 33(2).

1.2 Dependent Claims

1.2.1 Claims 2, 4, 5, 7, 11, 16
The additional features of claims 2, 4, 5, 7, 11 and 16 are known from document D1 (see abstract, paragraphs 27, 28, 32 and figures 2, 6). Therefore, claims 2, 4, 5, 7, 11 and 16 lack novelty under PCT Article 33(2).

1.2.2 Claims 3, 6, 8-10, 13-15, 18-20
The feature defined in claims 3, 6, 8-10, 13-15 and 18-20 has no corresponding features in D1-D4. Accordingly, claims 3, 6, 8-10, 13-15 and 18-20 are not anticipated by any of the documents, nor are they obvious by the documents, taken alone or in combination. Therefore, claims 3, 6, 8-10, 13-15 and 18-20 are novel and involve an inventive step under PCT Article 33(2) and (3).

2. Industrial Applicability
Claims 1-20 are industrially applicable under PCT Article 33(4).

(12) INTERNATIONAL APPLICATION PUBLISHED UNDER THE PATENT COOPERATION TREATY (PCT)

(19) World Intellectual Property Organization
International Bureau

(43) International Publication Date
29 March 2012 (29.03.2012)

PCT

(10) International Publication Number
WO 2012/039892 A1

(51) International Patent Classification:
E21B 43/08 (2006.01) *E21B 43/10* (2006.01)

(21) International Application Number:
PCT/US2011/049471

(22) International Filing Date:
27 August 2011 (27.08.2011)

(25) Filing Language: English

(26) Publication Language: English

(30) Priority Data:
12/888,607 23 September 2010 (23.09.2010) US

(71) Applicant *(for all designated States except US)*: **HALLIBURTON ENERGY SERVICES, INC.** [US/US]; 2601 Beltline Road, Carrollton, TX 75006 (US).

(72) Inventors; and

(75) Inventors/Applicants *(for US only)*: **GRECI, Stephen, Michael** [US/US]; 4416 San Mateo Ln., McKinney, TX 75070 (US). **HOLDERMAN, Luke, William** [US/US]; 3709 Campstone, Plano, TX 75023 (US). **LOPEZ, Jean-Marc** [FR/US]; 7308 Stoddard Ln., Plano, TX 75025 (US).

(74) Agent: **YOUST, Lawrence, R.**; Lawrence Youst PLLC, One Waterway Court, Suite 3B, The Woodlands, TX 77380 (US).

[Continued on next page]

(54) Title: SAND CONTROL SCREEN ASSEMBLY HAVING A MECHANICALLY ATTACHED SCREEN JACKET

(57) Abstract: A sand control screen assembly (100) for use in a subterranean well. The sand control screen assembly (100) includes a base pipe (102) having an outer surface and at least one opening (104). A screen jacket (106) is disposed around the base pipe (102). The screen jacket (106) has a filter medium (112) and an outer shroud (114). The outer shroud (114) has first and second ends (124, 126) with inner and outer surfaces. Connector rings (120, 122) form mechanical interfaces between the base pipe (102) and the first and second ends (124, 126), respectively, of the outer shroud (114). Each of the connector rings (120, 122) is operable to mechanically induce permanent deformation in the outer surface of the base pipe (102) and at least one of the inner surface and the outer surface of the outer shroud (114), thereby connecting the screen jacket (106) to the base pipe (102).

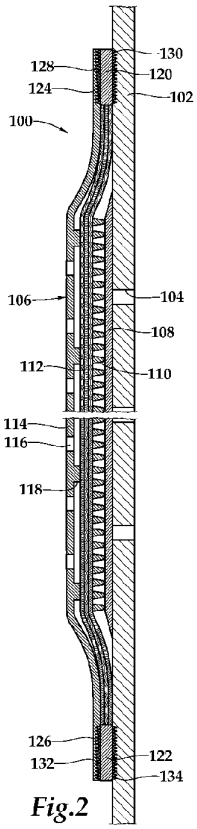

Fig.2

WO 2012/039892 A1

(81) **Designated States** *(unless otherwise indicated, for every kind of national protection available)*: AE, AG, AL, AM, AO, AT, AU, AZ, BA, BB, BG, BH, BR, BW, BY, BZ, CA, CH, CL, CN, CO, CR, CU, CZ, DE, DK, DM, DO, DZ, EC, EE, EG, ES, FI, GB, GD, GE, GH, GM, GT, HN, HR, HU, ID, IL, IN, IS, JP, KE, KG, KM, KN, KP, KR, KZ, LA, LC, LK, LR, LS, LT, LU, LY, MA, MD, ME, MG, MK, MN, MW, MX, MY, MZ, NA, NG, NI, NO, NZ, OM, PE, PG, PH, PL, PT, QA, RO, RS, RU, SC, SD, SE, SG, SK, SL, SM, ST, SV, SY, TH, TJ, TM, TN, TR, TT, TZ, UA, UG, US, UZ, VC, VN, ZA, ZM, ZW.

(84) **Designated States** *(unless otherwise indicated, for every kind of regional protection available)*: ARIPO (BW, GH, GM, KE, LR, LS, MW, MZ, NA, SD, SL, SZ, TZ, UG, ZM, ZW), Eurasian (AM, AZ, BY, KG, KZ, MD, RU, TJ, TM), European (AL, AT, BE, BG, CH, CY, CZ, DE, DK, EE, ES, FI, FR, GB, GR, HR, HU, IE, IS, IT, LT, LU, LV, MC, MK, MT, NL, NO, PL, PT, RO, RS, SE, SI, SK, SM, TR), OAPI (BF, BJ, CF, CG, CI, CM, GA, GN, GQ, GW, ML, MR, NE, SN, TD, TG).

Declarations under Rule 4.17:

— *as to applicant's entitlement to apply for and be granted a patent (Rule 4.17(ii))*

Published:

— *with international search report (Art. 21(3))*

— *before the expiration of the time limit for amending the claims and to be republished in the event of receipt of amendments (Rule 48.2(h))*

SAND CONTROL SCREEN ASSEMBLY HAVING A MECHANICALLY ATTACHED SCREEN JACKET

TECHNICAL FIELD OF THE INVENTION

[0001] This invention relates, in general, to equipment utilized in conjunction with operations performed in subterranean wells and, in particular, to a sand control screen assembly having a mechanically attached screen jacket.

BACKGROUND OF THE INVENTION

[0002] Without limiting the scope of the present invention, its background will be described with reference to producing fluid from a hydrocarbon bearing subterranean formation, as an example.

[0003] Since the beginning of oil production from subsurface formations, the industry has been concerned with efficient control of the movement of unconsolidated formation particles, such as sand, into the wellbore. For example, such formation movement commonly occurs during production from completions in loose sandstone or following hydraulic fracture of a formation. Production of these materials causes numerous problems in the operation of oil, gas or water wells. These problems include plugged formations, tubing and subsurface flow lines, as well as erosion of casing, downhole equipment and surface equipment. These problems lead to high maintenance costs and unacceptable well downtime. Accordingly, numerous methods have been utilized to control the movement of these unconsolidated formation particles during the production of fluids.

[0004] For example, one or more sand control screen assemblies are commonly included in the completion string to control the movement of formation particles. Such sand control screen assemblies are commonly constructed by installing one or more screen jackets on a perforated base pipe. The screen jackets may include one or more drainage layers, one or more screen elements such as a wire wrapped screen or single or multi layer wire mesh screen and a perforated outer shroud. Conventionally, screen jackets have been secured to the base pipe by welding.

[0005] It has been found, however, that the process of welding a screen jacket to a base pipe is sometimes very difficult due to the difference in metallurgy of the components. For example, the material used for the base pipe may be 13 chrome while the material used for

the screen jacket may be a special alloy such as 304L stainless steel, 316L stainless steel, Inconel, Hastelloy or Monel. In addition, it has been found that welding a screen jacket to a base pipe typically requires a post weld stress relief process which can be time consuming. Further, it has been found that welding a screen jacket to a base pipe can cause damage to the screen jacket resulting in numerous types of failures in the sand control screen assemblies.

[0006] Accordingly, a need has arisen for an apparatus for attaching a screen jacket to a base pipe that does not require welding incompatibly different materials. A need has also arisen for such an apparatus for attaching a screen jacket to a base pipe that does not require a post weld stress relief process. Further, a need has arisen for such an apparatus for attaching a screen jacket to a base pipe that does not result in damage to the screen jacket.

SUMMARY OF THE INVENTION

[0007] The present invention disclosed herein comprises a sand control screen assembly for preventing the inflow of formation particles during production. The sand control screen assembly of the present invention does not require welding incompatibly different materials to connect a screen jacket to the base pipe. In addition, the sand control screen assembly of the present invention does not require a post weld stress relief process or result in damage to the screen jacket.

[0008] In one aspect, the present invention is directed to a sand control screen assembly for use in a subterranean well. The sand control screen assembly includes a base pipe having an outer surface and at least one opening in a side wall portion thereof. A screen jacket is disposed around the base pipe. The screen jacket has a filter medium and an outer shroud. The outer shroud has first and second ends with inner and outer surfaces. Connector rings form a mechanical interface between the base pipe and the first and second ends, respectively, of the outer shroud. Each of the connector rings is operable to mechanically induce permanent deformation in the outer surface of the base pipe and at least one of the inner surface and the outer surface of the outer shroud, thereby connecting the screen jacket to the base pipe.

[0009] In one embodiment, the connector rings prevent longitudinal movement of the screen jacket relative to the base pipe. In another embodiment, the connector rings prevent rotational movement of the screen jacket relative to the base pipe. In certain embodiments, each connector ring is disposed between the outer surface of the base pipe and an inner surface of the outer shroud. In other embodiments, each connector ring is disposed around

the outer surface of the base pipe and an outer surface of the outer shroud. In one embodiment, the mechanically induced permanent deformation is achieved by crimping the connector rings to create penetrations into the base pipe and the outer shroud.

[0010] Preferably, the connector rings take the form of cylindrical rings having a cross sectional shape selected from the group consisting of a substantially rectangular shape, a substantially triangular shape and a substantially pyramidal shape. In some embodiments, the connector rings include spikes extending outwardly from an inner surface of the connector rings, an outer surface of the connector rings or both. In these embodiments the spikes may be removable inserts. In other embodiments, the connector rings include a plurality of friction riser extending outwardly from an inner surface of the connector rings, an outer surface of the connector rings or both.

[0011] In another aspect, the present invention is directed to a sand control screen assembly for use in a subterranean well. The sand control screen assembly includes a base pipe having an outer surface and at least one opening in a side wall portion thereof. A screen jacket is disposed around the base pipe. The screen jacket has a filter medium and an outer shroud. The outer shroud has first and second ends with inner surfaces. Connector rings are disposed between the base pipe and the first and second ends, respectively, of the outer shroud. Each of the connector rings is operably connected to the inner surface of the outer shroud and operable to mechanically induce permanent deformation in the outer surface of the base pipe, thereby connecting the screen jacket to the base pipe.

[0012] In a further aspect, the present invention is directed to a sand control screen assembly for use in a subterranean well. The sand control screen assembly includes a base pipe having an outer surface and at least one opening in a side wall portion thereof. A screen jacket is disposed around the base pipe. The screen jacket has a filter medium and an outer shroud. The outer shroud has first and second ends with outer surfaces. Connector rings are disposed around the outer surface of the base pipe and the first and second ends, respectively, of the outer shroud forming a mechanical interface therebetween. Each of the connector rings is operable to mechanically induce permanent deformation in the outer surface of the base pipe and the outer surface of the outer shroud, thereby connecting the screen jacket to the base pipe.

BRIEF DESCRIPTION OF THE DRAWINGS

[0013] For a more complete understanding of the features and advantages of the present invention, reference is now made to the detailed description of the invention along with the accompanying figures in which corresponding numerals in the different figures refer to corresponding parts and in which:

[0014] Figure 1 is a schematic illustration of a well system operating a plurality of sand control screen assemblies according to an embodiment of the present invention;

[0015] Figure 2 is a cross sectional view of a sand control screen assembly according to an embodiment of the present invention;

[0016] Figure 3 is an isometric view of one embodiment of a connector ring for use in a sand control screen assembly of the present invention;

[0017] Figure 4 is an isometric view of one embodiment of a connector ring for use in a sand control screen assembly of the present invention;

[0018] Figure 5 is an isometric view of one embodiment of a connector ring for use in a sand control screen assembly of the present invention;

[0019] Figure 6 is a cross sectional view of a sand control screen assembly according to an embodiment of the present invention;

[0020] Figure 7 is a cross sectional view of a sand control screen assembly according to an embodiment of the present invention;

[0021] Figure 8 is a cross sectional view of a sand control screen assembly according to an embodiment of the present invention;

[0022] Figure 9 is a cross sectional view of a sand control screen assembly according to an embodiment of the present invention;

[0023] Figure 10 is a cross sectional view of a sand control screen assembly according to an embodiment of the present invention; and

[0024] Figure 11 is a cross sectional view of a sand control screen assembly according to an embodiment of the present invention.

DETAILED DESCRIPTION OF THE INVENTION

[0025] While the making and using of various embodiments of the present invention are discussed in detail below, it should be appreciated that the present invention provides many applicable inventive concepts which can be embodied in a wide variety of specific contexts.

The specific embodiments discussed herein are merely illustrative of specific ways to make and use the invention, and do not delimit the scope of the present invention.

[0026] Referring initially to figure 1, therein is depicted a well system including a plurality of sand control screen assemblies embodying principles of the present invention that is schematically illustrated and generally designated 10. In the illustrated embodiment, a wellbore 12 extends through the various earth strata. Wellbore 12 has a substantially vertical section 14, the upper portion of which has cemented therein a casing string 16. Wellbore 12 also has a substantially horizontal section 18 that extends through a hydrocarbon bearing subterranean formation 20. As illustrated, substantially horizontal section 18 of wellbore 12 is open hole.

[0027] Positioned within wellbore 12 and extending from the surface is a tubing string 22. Tubing string 22 provides a conduit for formation fluids to travel from formation 20 to the surface. At its lower end, tubing string 22 is coupled to a completion string that has been installed in wellbore 12 and divides the completion interval into various production intervals adjacent to formation 20. The completion string includes a plurality of sand control screen assemblies 24, each of which is positioned between a pair of packers 26 that provides a fluid seal between the completion string and wellbore 12, thereby defining the production intervals. Sand control screen assemblies 24 serve the primary function of filtering particulate matter out of the production fluid stream.

[0028] Even though figure 1 depicts sand control screen assemblies of the present invention in an open hole environment, it should be understood by those skilled in the art that the sand control screen assemblies of the present invention are equally well suited for use in cased wells. Also, even though figure 1 depicts one sand control screen assembly in each production interval, it should be understood by those skilled in the art that any number of sand control screen assemblies of the present invention may be deployed within a production interval without departing from the principles of the present invention. In addition, even though figure 1 depicts multiple production intervals separated by packers, it should be understood by those skilled in the art that the completion interval may have any number of production intervals including a single interval with a corresponding number of packers or no packers. Further, even though figure 1 depicts the sand control screen assemblies of the present invention in a horizontal section of the wellbore, it should be understood by those skilled in the art that the sand control screen assemblies of the present invention are equally well suited for use in wells having other directional configurations including vertical wells,

deviated wellbores, slanted wells, multilateral well and the like. Accordingly, it should be understood by those skilled in the art that the use of directional terms such as above, below, upper, lower, upward, downward, left, right, uphole, downhole and the like are used in relation to the illustrative embodiments as they are depicted in the figures, the upward direction being toward the top of the corresponding figure and the downward direction being toward the bottom of the corresponding figure, the uphole direction being toward the surface of the well and the downhole direction being toward the toe of the well.

[0029] Referring next to figure 2, an embodiment of a sand control screen assembly of the present invention is depicted and generally designated 100. Sand control screen assembly 100 includes a base pipe 102 having a plurality of openings or perforations 104. Sand control screen assembly 100 has a screen jacket 106 that is attached to base pipe 102 according to the present invention. In the illustrated embodiment, screen jacket 106 includes plurality of circumferentially distributed axially extending ribs 108 with a screen wire 110 wrapped therearound that serves as the drainage layer for screen jacket 106. Screen jacket 106 also includes a filter medium 112, designed to allow fluids to flow therethrough but prevent particulate matter of a predetermined size from flowing therethrough. As illustrated, filter medium 112 consist of a fluid-porous, particulate restricting material in the form of a plurality of layers of a wire mesh that are diffusion bonded or sintered together to form a fluid porous wire mesh screen. In one embodiment, filter medium 112 has multiple layers of a plain Dutch weave or a twilled Dutch weave wire mesh material preferably having a uniform pore structure and a controlled pore size that is determined based upon formation properties. In other embodiments, filter medium 112 may be a single layer of wire mesh, multiple layers of wire mesh that are not bonded together, a single layer of wire wrap, multiple layers of wire wrap or the like, that may or may not operate with a drainage layer. Screen jacket 106 further includes an outer shroud 114 positioned around filter medium 112. As depicted, outer shroud 114 has a plurality of openings 116 and a plurality of dimples 118 that provide standoff between outer shroud 114 and filter medium 112.

[0030] Screen jacket 106 is mechanically coupled to base pipe 102 with a pair of connector rings 120, 122. In the illustrated embodiment, connector rings 120, 122 form mechanical interfaces between the outer surface of base pipe 102 and the inner surface of end portions 124, 126 of outer shroud 114. As best seen in figure 3, connector ring 120 is a cylindrical ring having a substantially rectangular cross sectional shape. Preferably, connector ring 120 is formed from a metal such as 13 chrome, 304L stainless steel, 316L

stainless steel, 420 stainless steel, 410 stainless steel, Incoloy 825 or similar alloy. In addition, connector ring 120 includes spikes 128 extending outwardly from its outer surface and spikes 130 extending outwardly from its inner surface. Preferably, spikes 128, 130 are formed from a hardened material including a surface hardened material and are operable to mechanically induced permanent deformation in base pipe 102 and outer shroud 114 such as through a crimping process which causes spikes 128 to create penetrations into outer shroud 114 and spikes 130 to create penetrations into base pipe 102. Similarly, connector ring 122 includes spikes 132 extending outwardly from its outer surface and spikes 134 extending outwardly from its inner surface that respectively, create penetrations into outer shroud 114 and base pipe 102 during a crimping or similar mechanical process. Once the mechanical connections are made between outer shroud 114 and base pipe 102 using connector rings 120, 122, longitudinal and rotational movement of screen jacket 106 relative to base pipe 102 is prevented. Alternatively, connector rings 120, 122 could be have spikes extending from only their inner surfaces to mechanically induced permanent deformation in base pipe 102 while being connected to outer shroud 114 using other techniques such as welding.

[0031] Referring next to figure 4, an alternate embodiment of a connector ring is depicted and generally designated 140. Connector ring 140 is a cylindrical ring having a substantially rectangular cross sectional shape. Preferably, connector ring 140 is formed from a metal or metal alloy. In addition, connector ring 140 includes a plurality of friction risers 142 extending outwardly from its outer surface and friction risers 144 extending outwardly from its inner surface. Friction risers 142, 144 may be in the form of an uneven surface such as a knurled surface formed by machining, etching or otherwise reshaping the surfaces of connector ring 140. Alternatively, friction risers 142, 144 may be in the form of a surface coating such as a particle coating including, for example, a tungsten carbide particle coating. Friction risers 142, 144 are operable to mechanically induced permanent deformation in the base pipe and the outer shroud such as through a crimping process which causes friction risers 142 to create penetrations into the outer shroud and friction risers 144 to create penetrations into the base pipe.

[0032] Referring next to figure 5, another alternate embodiment of a connector ring is depicted and generally designated 150. Connector ring 150 is a cylindrical ring having a substantially rectangular cross sectional shape. Preferably, connector ring 150 is formed from a polymer or rubber material or may be formed from a high strength adhesive material.

Connector ring 150 may be used to mechanically couple the outer shroud to the base pipe using a crimping process.

[0033] Referring next to figure 6, an embodiment of a sand control screen assembly of the present invention is depicted and generally designated 200. Sand control screen assembly 200 includes a base pipe 202 having a plurality of openings or perforations 204. Sand control screen assembly 200 has a screen jacket 206 that is attached to base pipe 202 according to the present invention. Screen jacket 206 includes plurality of circumferentially distributed axially extending ribs 208 with a screen wire 210 wrapped therearound, a filter medium 212 and an outer shroud 214 having a plurality of openings 216 and a plurality of dimples 218.

[0034] Screen jacket 206 is mechanically coupled to base pipe 202 with a pair of connector rings 220, 222. In the illustrated embodiment, connector rings 220, 222 form mechanical interfaces between the outer surface of base pipe 202 and the inner surface of end portions 224, 226 of outer shroud 214. Connector rings 220, 222 are in the form of cylindrical rings having substantially triangular cross sectional shapes and are preferably formed from a metal or metal alloy. In the illustrated embodiment, connector rings 220, 222 includes outwardly extending spikes that are preferably formed from a hardened material and are operable to mechanically induced permanent deformation in base pipe 202 and outer shroud 214 such as through a crimping process to create penetrations into base pipe 202 and outer shroud 214. Once the mechanical connections are made between outer shroud 214 and base pipe 202 using connector rings 220, 222, longitudinal and rotational movement of screen jacket 206 relative to base pipe 202 is prevented. Alternatively, connector rings 220, 222 could have other types of friction riser as described above with reference to figure 4. As another alternative, connector rings 220, 222 could have spikes or friction risers extending from only their inner surfaces to mechanically induce permanent deformation in base pipe 202 while being connected to outer shroud 214 using other techniques such as welding.

[0035] Referring next to figure 7, an embodiment of a sand control screen assembly of the present invention is depicted and generally designated 300. Sand control screen assembly 300 includes a base pipe 302 having a plurality of openings or perforations 304. Sand control screen assembly 300 has a screen jacket 306 that is attached to base pipe 302 according to the present invention. Screen jacket 306 includes plurality of circumferentially distributed axially extending ribs 308 with a screen wire 310 wrapped therearound, a filter medium 312 and an outer shroud 314 having a plurality of openings 316 and a plurality of dimples 318.

[0036] Screen jacket 306 is mechanically coupled to base pipe 302 with a pair of connector rings 320, 322. In the illustrated embodiment, connector rings 320, 322 form mechanical interfaces between the outer surface of base pipe 302 and the inner surface of end portions 324, 326 of outer shroud 314. Connector rings 320, 322 are in the form of cylindrical rings having substantially pyramidal cross sectional shapes and are preferably formed from a metal or metal alloy. In the illustrated embodiment, connector rings 320, 322 includes outwardly extending spikes that are preferably formed from a hardened material and are operable to mechanically induced permanent deformation in base pipe 302 and outer shroud 314 such as through a crimping process to create penetrations into base pipe 302 and outer shroud 314. Once the mechanical connections are made between outer shroud 314 and base pipe 302 using connector rings 320, 322, longitudinal and rotational movement of screen jacket 306 relative to base pipe 302 is prevented. Alternatively, connector rings 320, 322 could have other types of friction riser as described above with reference to figure 4. As another alternative, connector rings 320, 322 could have spikes or friction risers extending from only their inner surfaces to mechanically induce permanent deformation in base pipe 302 while being connected to outer shroud 314 using other techniques such as welding.

[0037] Referring next to figure 8, an embodiment of a sand control screen assembly of the present invention is depicted and generally designated 400. Sand control screen assembly 400 includes a base pipe 402 having a plurality of openings or perforations 404. Sand control screen assembly 400 has a screen jacket 406 that is attached to base pipe 402 according to the present invention. Screen jacket 406 includes plurality of circumferentially distributed axially extending ribs 408 with a screen wire 410 wrapped therearound, a filter medium 412 and an outer shroud 414 having a plurality of openings 416 and a plurality of dimples 418.

[0038] Screen jacket 406 is mechanically coupled to base pipe 402 with a pair of connector rings 420, 422. In the illustrated embodiment, connector rings 420, 422 form mechanical interfaces between the outer surface of base pipe 402 and the outer surface of end portions 424, 426 of outer shroud 414. Connector rings 420, 422 are preferably formed from a metal or metal alloy. In the illustrated embodiment, connector rings 420, 422 include outwardly extending spikes that are preferably formed from a hardened material and are operable to mechanically induced permanent deformation in base pipe 402 and outer shroud 414 such as through a crimping process to create penetrations into base pipe 402 and outer shroud 414. Once the mechanical connections are made between outer shroud 414 and base pipe 402 using connector rings 420, 422, longitudinal and rotational movement of screen

jacket 406 relative to base pipe 402 is prevented. Alternatively, connector rings 420, 422 could have other types of friction riser as described above with reference to figure 4.

[0039] Referring next to figure 9, an embodiment of a sand control screen assembly of the present invention is depicted and generally designated 500. Sand control screen assembly 500 includes a base pipe 502 having a plurality of openings or perforations 504. Sand control screen assembly 500 has a screen jacket 506 that is attached to base pipe 502 according to the present invention. Screen jacket 506 includes plurality of circumferentially distributed axially extending ribs 508 with a screen wire 510 wrapped therearound, a filter medium 512 and an outer shroud 514 having a plurality of openings 516 and a plurality of dimples 518.

[0040] Screen jacket 506 is mechanically coupled to base pipe 502 with a pair of connector rings 520, 522. In the illustrated embodiment, connector rings 520, 522 form mechanical interfaces between the outer surface of base pipe 502 and the outer surface of end portions 524, 526 of outer shroud 514. Connector rings 520, 522 are preferably formed from a metal or metal alloy. In the illustrated embodiment, connector rings 520, 522 include outwardly extending spikes depicted as removable inserts 528 that are preferably formed from a hardened material and are operable to mechanically induced permanent deformation in base pipe 502 and outer shroud 514 such as through a crimping process to create penetrations into base pipe 502 and outer shroud 514. Once the mechanical connections are made between outer shroud 514 and base pipe 502 using connector rings 520, 522, longitudinal and rotational movement of screen jacket 506 relative to base pipe 502 is prevented.

[0041] Referring next to figure 10, an embodiment of a sand control screen assembly of the present invention is depicted and generally designated 600. Sand control screen assembly 600 includes a base pipe 602 having a plurality of openings or perforations 604. Sand control screen assembly 600 has a screen jacket 606 that is attached to base pipe 602 according to the present invention. Screen jacket 606 includes plurality of circumferentially distributed axially extending ribs 608 with a screen wire 610 wrapped therearound, a filter medium 612 and an outer shroud 614 having a plurality of openings 616 and a plurality of dimples 618.

[0042] Screen jacket 606 is mechanically coupled to base pipe 602 with a pair of connector rings 620, 622. In the illustrated embodiment, connector rings 620, 622 form mechanical interfaces between the outer surface of base pipe 602 and outer shroud 614. Connector rings 620, 622 are preferably formed from a metal or metal alloy. In the illustrated embodiment, connector rings 620, 622 are welded at 624, 626 to outer shroud 614 and include outwardly extending spikes that are preferably formed from a hardened material and

are operable to mechanically induced permanent deformation in base pipe 602 such as through a crimping process to create penetrations into base pipe 602. Once the mechanical connections are made between outer shroud 614 and base pipe 602 using connector rings 620, 622, longitudinal and rotational movement of screen jacket 606 relative to base pipe 602 is prevented.

[0043] Referring next to figure 11, an embodiment of a sand control screen assembly of the present invention is depicted and generally designated 700. Sand control screen assembly 700 includes a base pipe 702 having a plurality of openings or perforations 704. Sand control screen assembly 700 has a screen jacket 706 that is attached to base pipe 702 according to the present invention. Screen jacket 706 includes plurality of circumferentially distributed axially extending ribs 708 with a screen wire 710 wrapped therearound, a filter medium 712 and an outer shroud 714 having a plurality of openings 716 and a plurality of dimples 718.

[0044] Screen jacket 706 is mechanically coupled to base pipe 702 with a pair of connector rings 720, 722 that are integrally formed on the ends of outer shroud 714 or are otherwise coupled thereto mechanically or by welds. In the illustrated embodiment, connector rings 720, 722 form mechanical interfaces between outer shroud 714 and base pipe 702. In the illustrated embodiment, connector rings 720, 722 include outwardly extending spikes that are preferably formed from a hardened material and are operable to mechanically induced permanent deformation in base pipe 702 such as through a crimping process to create penetrations into base pipe 702. Once the mechanical connections are made between outer shroud 714 and base pipe 702 using connector rings 720, 722, longitudinal and rotational movement of screen jacket 706 relative to base pipe 702 is prevented.

[0045] While this invention has been described with reference to illustrative embodiments, this description is not intended to be construed in a limiting sense. Various modifications and combinations of the illustrative embodiments as well as other embodiments of the invention will be apparent to persons skilled in the art upon reference to the description. It is, therefore, intended that the appended claims encompass any such modifications or embodiments.

What is claimed is:

1. A sand control screen assembly for use in a subterranean well, the sand control screen assembly comprising:

a base pipe having an outer surface and at least one opening in a side wall portion thereof;

a screen jacket disposed around the base pipe, the screen jacket having a filter medium and an outer shroud, the outer shroud having first and second ends with inner and outer surfaces; and

connector rings forming a mechanical interface between the base pipe and the first and second ends, respectively, of the outer shroud, each of the connector rings operable to mechanically induce permanent deformation in the outer surface of the base pipe and at least one of the inner surface and the outer surface of the outer shroud, thereby connecting the screen jacket to the base pipe.

2. The sand control screen assembly as recited in claim 1 wherein the connector rings prevent longitudinal movement of the screen jacket relative to the base pipe.

3. The sand control screen assembly as recited in claim 1 wherein the connector rings prevent rotational movement of the screen jacket relative to the base pipe.

4. The sand control screen assembly as recited in claim 1 wherein each connector ring is disposed between the outer surface of the base pipe and one of the inner surfaces of the outer shroud.

5. The sand control screen assembly as recited in claim 1 wherein each connector ring is disposed around the outer surface of the base pipe and one of the outer surfaces of the outer shroud.

6. The sand control screen assembly as recited in claim 1 wherein the mechanically induced permanent deformation further comprises crimping the connector rings to create penetrations into the base pipe and the outer shroud.

7. The sand control screen assembly as recited in claim 1 wherein the connector rings further comprise cylindrical rings.

8. The sand control screen assembly as recited in claim 1 wherein the connector rings further comprise a plurality of spikes extending outwardly from at least one of an inner surface and an outer surface of the connector rings.

9. The sand control screen assembly as recited in claim 8 wherein the spikes further comprise removable inserts.

10. The sand control screen assembly as recited in claim 1 wherein the connector rings further comprise a plurality of friction riser extending outwardly from at least one of an inner surface and an outer surface of the connector rings.

11. The sand control screen assembly as recited in claim 1 wherein the connector rings have a cross sectional shape selected from the group consisting of a substantially rectangular shape, a substantially triangular shape and a substantially pyramidal shape.

12. A sand control screen assembly for use in a subterranean well, the sand control screen assembly comprising:

a base pipe having an outer surface and at least one opening in a side wall portion thereof;

a screen jacket disposed around the base pipe, the screen jacket having a filter medium and an outer shroud, the outer shroud having first and second ends with inner surfaces; and

connector rings disposed between the base pipe and the first and second ends, respectively, of the outer shroud, each of the connector rings operably coupled to the outer shroud and operable to mechanically induce permanent deformation in the outer surface of the base pipe, thereby connecting the screen jacket to the base pipe.

13. The sand control screen assembly as recited in claim 12 wherein the mechanically induced permanent deformation further comprises crimping the connector rings to create penetrations into the base pipe.

14. The sand control screen assembly as recited in claim 12 wherein the connector rings further comprise a plurality of spikes extending outwardly from an inner surface of the connector rings.

15. The sand control screen assembly as recited in claim 12 wherein the connector rings further comprise a plurality of friction riser extending outwardly from an inner surface of the connector rings.

16. The sand control screen assembly as recited in claim 12 wherein the connector rings have a cross sectional shape selected from the group consisting of a substantially rectangular shape, a substantially triangular shape and a substantially pyramidal shape.

17. A sand control screen assembly for use in a subterranean well, the sand control screen assembly comprising:

a base pipe having an outer surface and at least one opening in a side wall portion thereof;

a screen jacket disposed around the base pipe, the screen jacket having a filter medium and an outer shroud, the outer shroud having first and second ends with outer surfaces; and

connector rings disposed around the outer surface of the base pipe and the first and second ends, respectively, of the outer shroud forming a mechanical interface therebetween, each of the connector rings operable to mechanically induce permanent deformation in the outer surface of the base pipe and the outer surface of the outer shroud, thereby connecting the screen jacket to the base pipe.

18. The sand control screen assembly as recited in claim 17 wherein the mechanically induced permanent deformation further comprises crimping the connector rings to create penetrations into the base pipe and the outer shroud.

19. The sand control screen assembly as recited in claim 17 wherein the connector rings further comprise a plurality of spikes extending outwardly from an inner surface of the connector rings.

20. The sand control screen assembly as recited in claim 17 wherein the connector rings further comprise a plurality of friction riser extending outwardly from an outer surface of the connector rings.

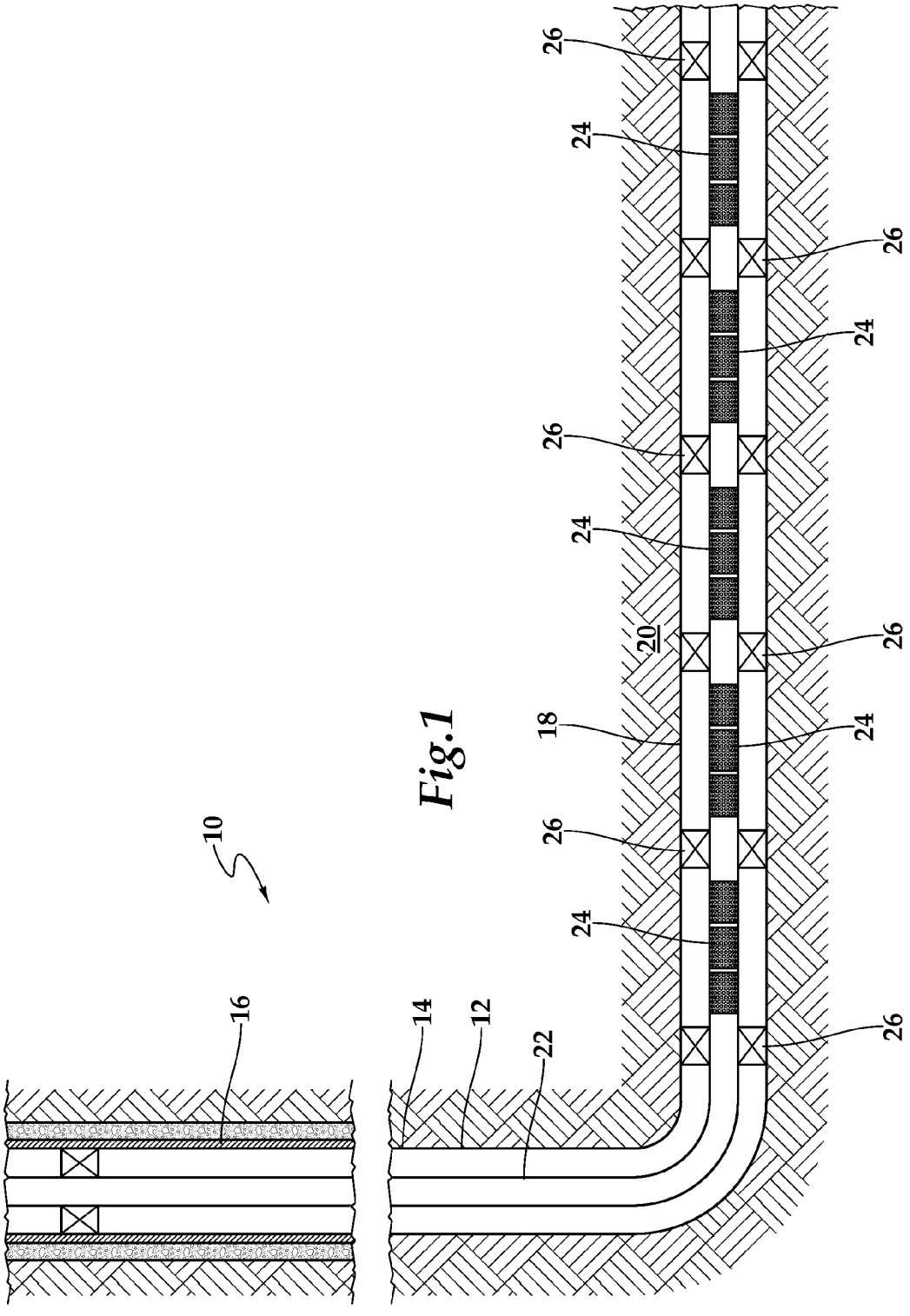

Fig.1

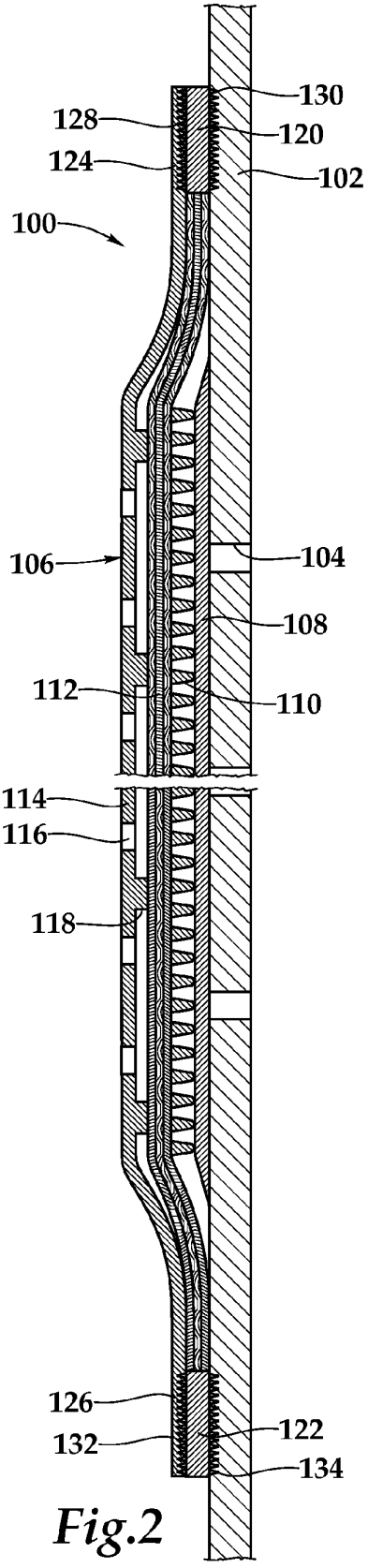

Fig.2

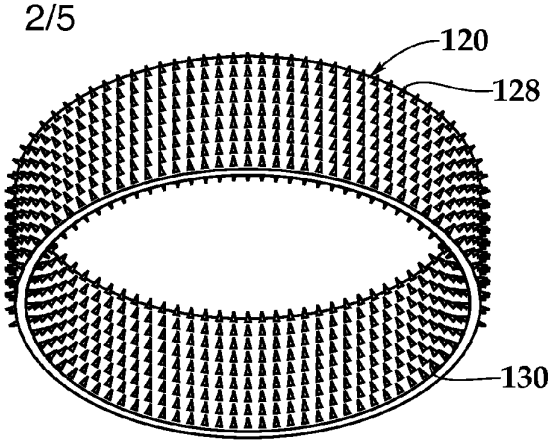

Fig.3

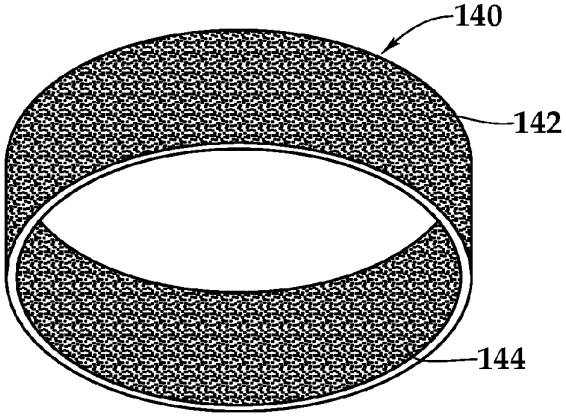

Fig.4

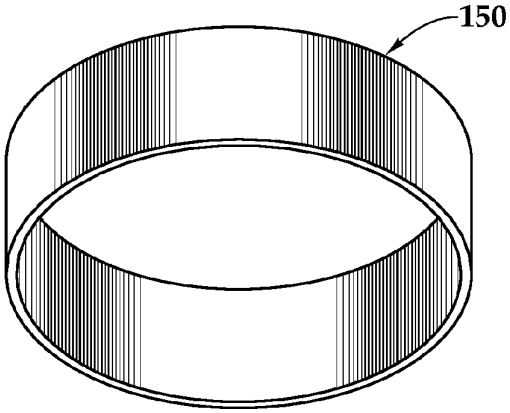

Fig.5

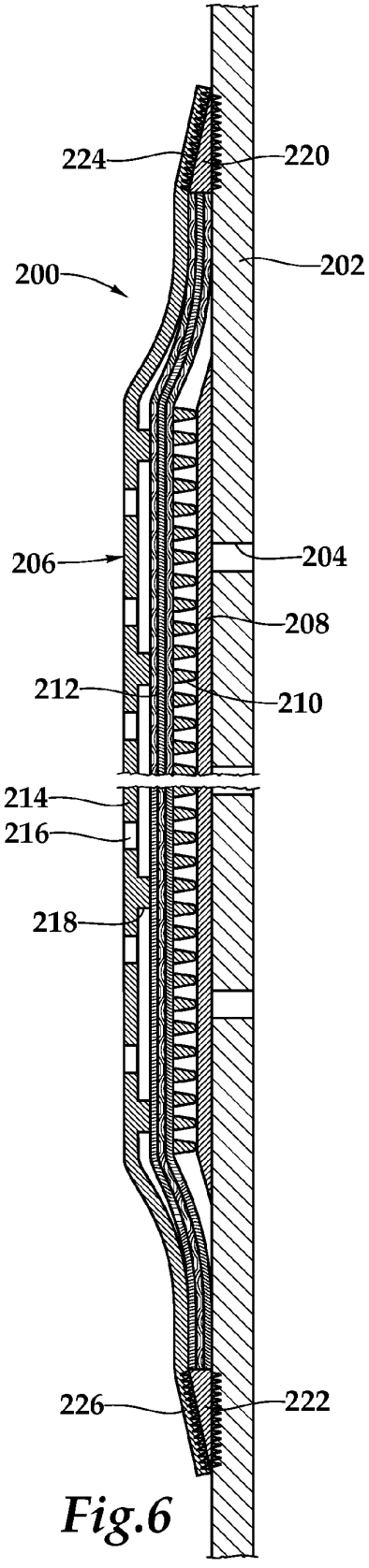
224
220
200
202
206
204
208
212
210
214
216
218
226
222

Fig.6

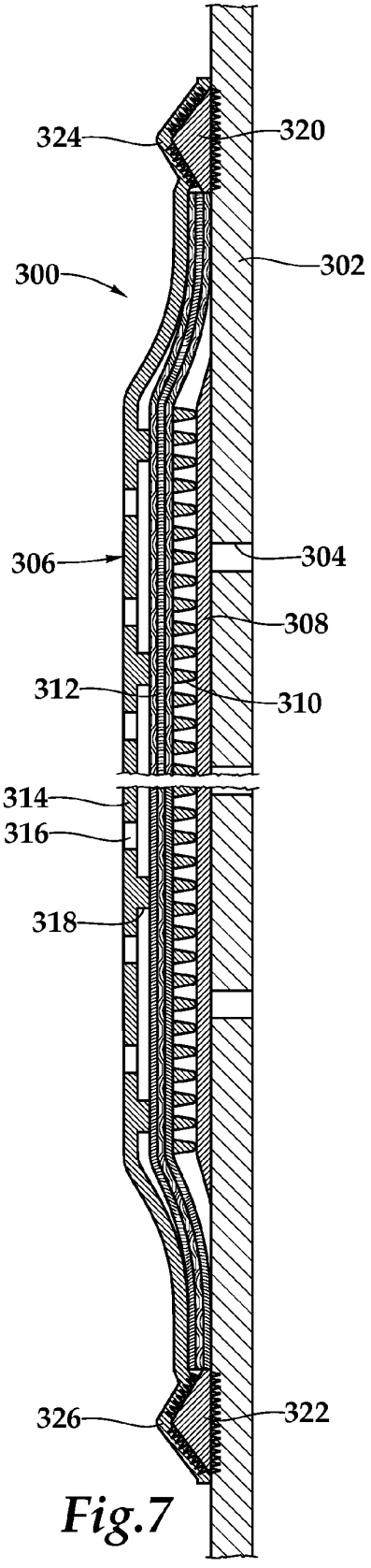
324
320
300
302
306
304
308
312
310
314
316
318
326
322

Fig.7

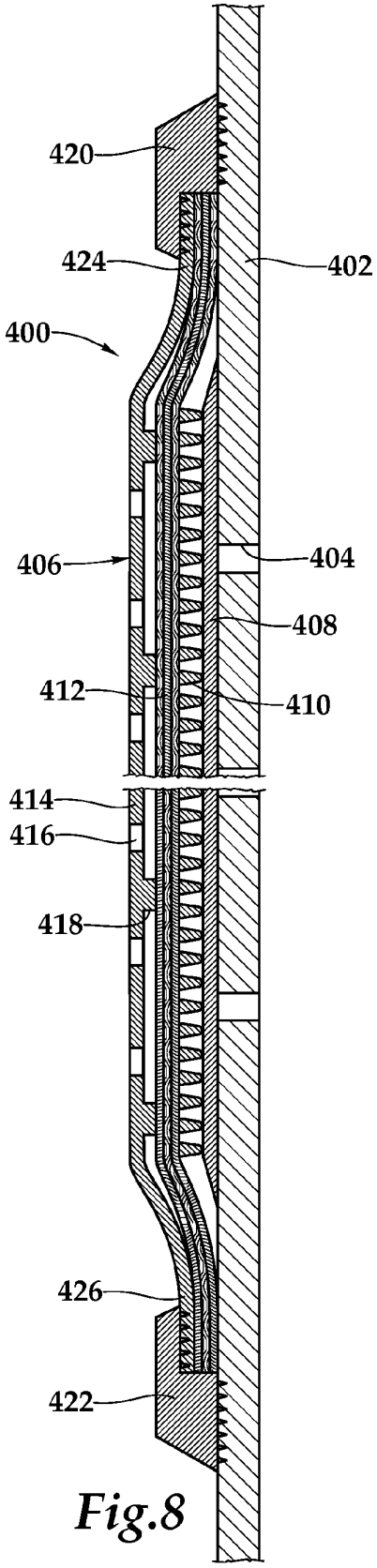
420
424
402
400
406
404
408
412
410
414
416
418
426
422

Fig.8

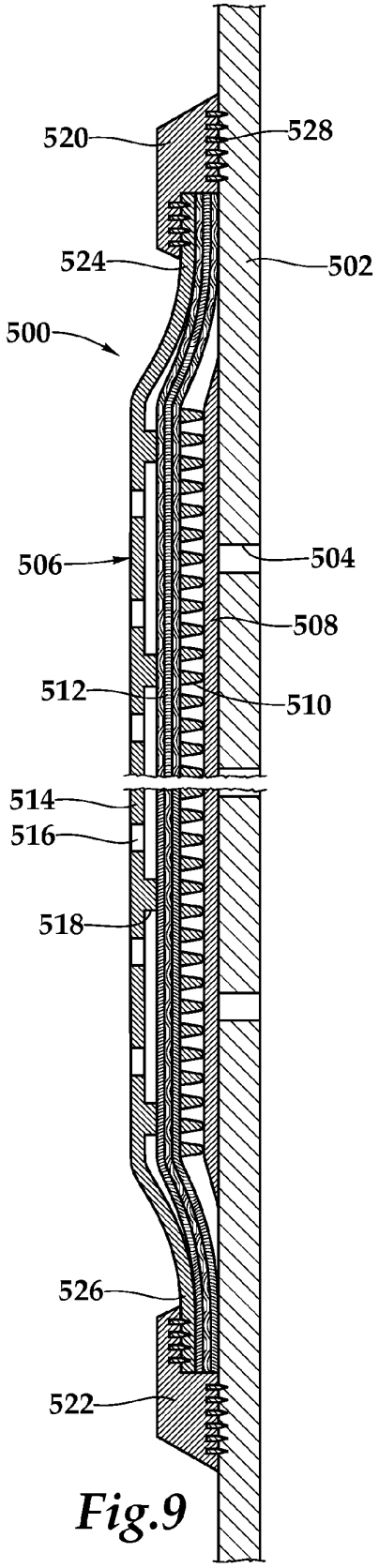
520
528
524
502
500
506
504
508
512
510
514
516
518
526
522

Fig.9

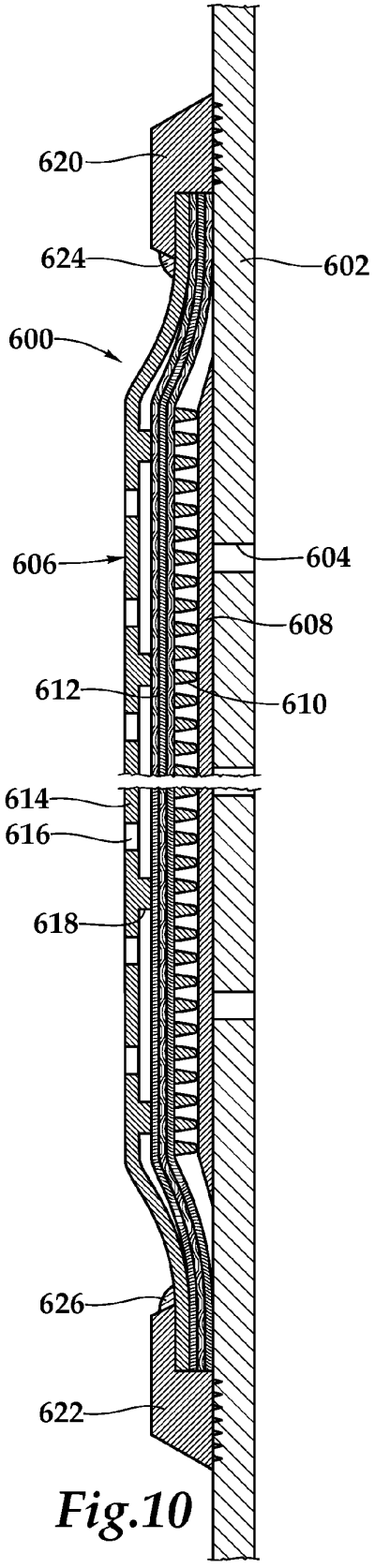
620
624
602
600
606
604
608
612
610
614
616
618
626
622

Fig.10

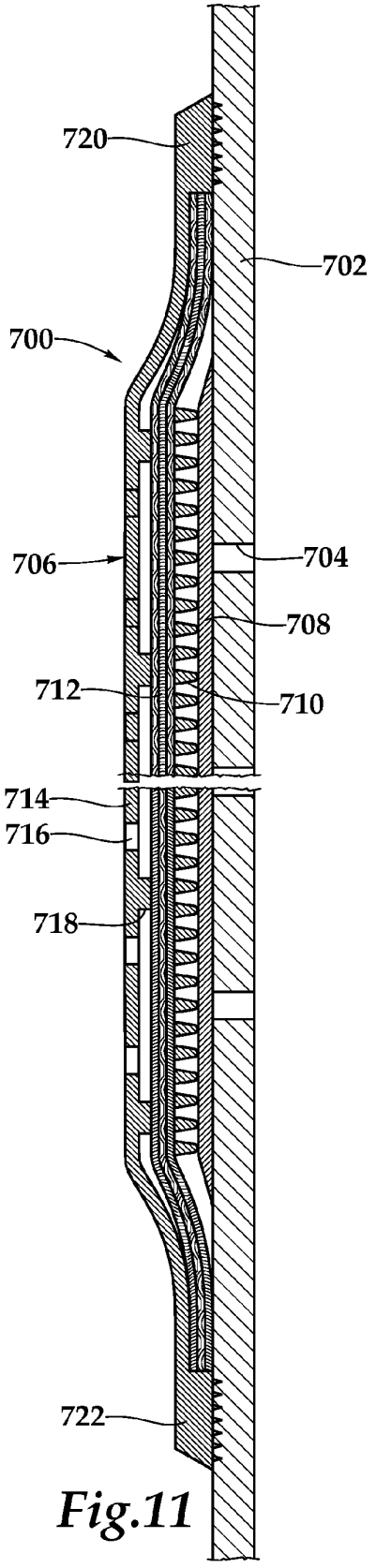
720
702
700
706
704
708
712
710
714
716
718
722

Fig.11

INTERNATIONAL SEARCH REPORT

International application No.
PCT/US2011/049471

A. CLASSIFICATION OF SUBJECT MATTER

E21B 43/08(2006.01)i, E21B 43/10(2006.01)i

According to International Patent Classification (IPC) or to both national classification and IPC

B. FIELDS SEARCHED

Minimum documentation searched (classification system followed by classification symbols)

E21B 43/08; E21B 43/04; E21B 43/10

Documentation searched other than minimum documentation to the extent that such documents are included in the fields searched

Korean utility models and applications for utility models
Japanese utility models and applications for utility models

Electronic data base consulted during the international search (name of data base and, where practicable, search terms used)

eKOMPASS(KIPO internal) & Keywords: screen, jacket, shroud, connect, attach, combinate, couple, ring, filter

C. DOCUMENTS CONSIDERED TO BE RELEVANT

Category*	Citation of document, with indication, where appropriate, of the relevant passages	Relevant to claim No.
X	US 2003-0056959 A1 (ANA M. CASTANO-MEARS et al.) 27 March 2003 See abstract, paragraphs 27,28,32 and figures 2,6	1,2,4,5,7,11,12,16,17
A	US 05842522 A (ECHOLS; RALPH H. et al.) 01 December 1998 See abstract, column 4 and figure 1	1-20
A	US 2003-0029614 A1 (DONALD H. MICHEL) 13 February 2003 See abstract, paragraphs 22,23 and figure 2	1-20
A	US 2002-0129935 A1 (ANA M. CASTANO-MEARS et al.) 19 September 2002 See abstract, paragraph 40 and figure 2	1-20

☐ Further documents are listed in the continuation of Box C.

☒ See patent family annex.

* Special categories of cited documents:
"A" document defining the general state of the art which is not considered to be of particular relevance
"E" earlier application or patent but published on or after the international filing date
"L" document which may throw doubts on priority claim(s) or which is cited to establish the publication date of citation or other special reason (as specified)
"O" document referring to an oral disclosure, use, exhibition or other means
"P" document published prior to the international filing date but later than the priority date claimed
"T" later document published after the international filing date or priority date and not in conflict with the application but cited to understand the principle or theory underlying the invention
"X" document of particular relevance; the claimed invention cannot be considered novel or cannot be considered to involve an inventive step when the document is taken alone
"Y" document of particular relevance; the claimed invention cannot be considered to involve an inventive step when the document is combined with one or more other such documents,such combination being obvious to a person skilled in the art
"&" document member of the same patent family

Date of the actual completion of the international search	Date of mailing of the international search report
09 FEBRUARY 2012 (09.02.2012)	**10 FEBRUARY 2012 (10.02.2012)**
Name and mailing address of the ISA/KR Korean Intellectual Property Office Government Complex-Daejeon, 189 Cheongsa-ro, Seo-gu, Daejeon 302-701, Republic of Korea Facsimile No. 82-42-472-7140	Authorized officer BAHNG, Seung Hoon Telephone No. 82-42-481-8444

Form PCT/ISA/210 (second sheet) (July 2009)

INTERNATIONAL SEARCH REPORT

Information on patent family members

International application No.

PCT/US2011/049471

Patent document cited in search report	Publication date	Patent family member(s)	Publication date
US 2003-0056959 A1	27.03.2003	DE 60113336 D1	20.10.2005
		EP 1167686 A2	02.01.2002
		EP 1167686 A3	16.10.2002
		EP 1167686 B1	14.09.2005
		US 6530431 B1	11.03.2003
		US 6776241 B2	17.08.2004
US 05842522 A	01.12.1998	EP 0783074 A2	09.07.1997
		EP 0783074 A3	26.08.1998
		US 05931232 A	03.08.1999
US 2003-0029614 A1	13.02.2003	US 2005-0178547 A1	18.08.2005
		US 2007-0119590 A1	31.05.2007
		US 6837308 B2	04.01.2005
		US 7178595 B2	20.02.2007
		US 7377320 B2	27.05.2008
		WO 03-014521 A1	20.02.2003
US 2002-0129935 A1	19.09.2002	AU 2001-38786 A1	08.11.2001
		AU 2001-38786 B2	27.05.2004
		BR 0101997 A	26.12.2001
		CA 2346441 A1	05.11.2001
		EP 1152120 A2	07.11.2001
		EP 1152120 A3	12.06.2002
		SG91921A1	15.10.2002
		US 2004-0060695 A1	01.04.2004
		US 6457518 B1	01.10.2002
		US 7108062 B2	19.09.2006

UNITED STATES PATENT AND TRADEMARK OFFICE

UNITED STATES DEPARTMENT OF COMMERCE
United States Patent and Trademark Office
Address: COMMISSIONER FOR PATENTS
P.O. Box 1450
Alexandria, Virginia 22313-1450
www.uspto.gov

APPLICATION NO.	FILING DATE	FIRST NAMED INVENTOR	ATTORNEY DOCKET NO.	CONFIRMATION NO.
12/888,683	09/23/2010	Ein-Yiao Shen	18106-203	4900

60951 7590 04/04/2011

WPAT, PC
INTELLECTUAL PROPERTY ATTORNEYS
1100 Quail Street, Suite 202
Newport Beach, CA 92660

EXAMINER	
BELLA, MATTHEW C	

ART UNIT	PAPER NUMBER
2624	

MAIL DATE	DELIVERY MODE
04/04/2011	PAPER

Please find below and/or attached an Office communication concerning this application or proceeding.

The time period for reply, if any, is set in the attached communication.

UNITED STATES PATENT AND TRADEMARK OFFICE

Commissioner for Patents
United States Patent and Trademark Office
P.O. Box 1450
Alexandria, VA 22313-1450
www.uspto.gov

WPAT, PC
INTELLECTUAL PROPERTY ATTORNEYS
1100 Quail Street, Suite 202
Newport Beach CA 92660

APR 4 2011

In re Application of :
Shen, Ein-Yiao *et al.* :
Serial No.: 12/888,683 :
Filed: September 23, 2010 : DECISION ON PETITION
For: **SYSTEM FOR ENHANCING COMPARATIVE GRAYSCALIZED AND COLORIZED MEDICAL IMAGES** : *ACCEPTANCE OF COLOR PHOTOGRAPHS*

This is a decision on the petition under 37 C.F.R. §1.84(b)(2) filed December 9, 2010, requesting acceptance of colored photographs. The petition requests that the color photographs be accepted in lieu of black and white drawings.

The petition requests that the color photographs identified in Figures 2, 3, 4, 5, 6 and 7 be accepted in lieu of black and white drawings.

A grantable petition under 37 C.F.R. §1.84(a)(2) must be accompanied by a fee set forth under 37 C.F.R. § 1.17(h), 3 (three) sets of the color drawings in question, and the specification must contain, or be amended to contain, the following language as the first paragraph in that portion of the specification relating to the brief description of the drawings:

"The file of this patent contains at least one drawing executed in color. Copies of this patent with color drawing(s) will be provided by the Patent and Trademark Office upon request and payment of the necessary fee."

The *petition* is **GRANTED**.

John Peng
Special Program Examiner
Technology Center 2600
Communications

UNITED STATES PATENT AND TRADEMARK OFFICE

Commissioner for Patents
United States Patent and Trademark Office
P.O. Box 1450
Alexandria, VA 22313-1450
www.uspto.gov

HONEYWELL/PERKOWSKI
PATENT SERVICES
101 COLUMBLA ROAD
PO BOX 2245
MORRISTOWN NJ 07962

MAILED
MAY 16 2011
OFFICE OF PETITIONS

In re Application of :
George Plesko :
Application No. 12/888,716 : DECISION REFUSING STATUS
Filed: September 23, 2010 : UNDER 37 CFR 1.47(b)
Attorney Docket No. 101-335USA000 :

This is in response to the petition under 37 CFR 1.47(b), filed April 13, 2011.

The petition under 37 CFR 1.47(b) is **DISMISSED**.

Rule 47 applicant is given TWO MONTHS from the mailing date of this decision to reply, correcting the below-noted deficiencies. Any reply should be entitled "Request for Reconsideration of Petition Under 37 C.F.R. § 1.47(b)," and should only address the deficiencies noted below, except that the reply may include an oath or declaration executed by the non-signing inventor. **Failure to respond will result in abandonment of the application.** Any extensions of time will be governed by 37 C.F.R. § 1.136(a).

A grantable petition under 37 CFR 1.47(b) requires: (1) proof that the non-signing inventor cannot be reached or refuses to sign the oath or declaration after having been presented with the application papers (specification, claims and drawings); (2) an acceptable oath or declaration in compliance with 37 CFR 1.63; (3) the petition fee; (4) a statement of the last known address of the non-signing inventor; (5) proof that the Rule 47(b) applicant has sufficient proprietary interest in the subject matter to justify the filing of the application; and (6) proof of

irreparable damage. The instant petition does not satisfy requirements (2) and (3).

As to requirement (2), Rule 47 applicant has not submitted an acceptable oath or declaration. As set forth in MPEP 409.03(b), the "37 CFR 1.47(b) applicant must make the oath required by 37 CFR 1.63 and 1.64 or 1.175." The title or position of the person signing must be stated if signing on behalf of a corporation. Where a corporation is the 37 CFR 1.47(b) applicant, an officer (President, Vice-President, Secretary, Treasurer, or Chief Executive Officer) thereof should normally sign the necessary oath or declaration. A corporation may authorize any person, including a registered attorney or agent, to sign the oath or declaration on its behalf. Where an oath or declaration is signed by a registered attorney or agent on behalf of a corporation, proof of the attorney's or agent's authority in the form of a statement signed by the appropriate corporate officer must be submitted (i.e. by submitting a Rule 3.73(b) statement), or the attorney or agent can simply state that he or she is authorized to sign on behalf of the corporation.

Here, the declaration submitted was not executed by the Rule 47 applicant. In addition, the declaration does not identify the citizenship and residence of the non-signing inventor as required by 37 CFR 1.63.

As to requirement (3), petitioner submitted $130 for the petition fee. However, a petition under Rule 47 requires a $200 fee. Accordingly, on renewed petition, petitioner must submit the $70 balance of the petition fee due.

The file does not indicate a change of address has been submitted, although the address given on the petition differs from the address of record. If appropriate, a change of address should be filed in accordance with MPEP 601.03. A courtesy copy of this decision is being mailed to the address given on the petition; however, the Office will mail all future correspondence solely to the address of record.

Further correspondence with respect to this matter should be addressed as follows:

By mail: Mail Stop Petitions
Commissioner for Patents
P.O. Box 1450
Alexandria VA 22313-1450

By FAX: (571)273-8300
Attn: Office of Petitions

Telephone inquiries related to this decision may be directed to the undersigned at (571)272-3207.

Cliff Congo
Petitions Attorney
Office of Petitions

cc: Thomas J. Perkowski, Esq.
22 Thorndale Circle
Darien, CT 06820

UNITED STATES PATENT AND TRADEMARK OFFICE

Commissioner for Patents
United States Patent and Trademark Office
P.O. Box 1450
Alexandria, VA 22313-1450
www.uspto.gov

MAILED
JUN 28 2011
OFFICE OF PETITIONS

HONEYWELL/PERKOWSKI
PATENT SERVICES
101 COLUMBLA ROAD
PO BOX 2245
MORRISTOWN NJ 07962

In re Application of :
George Plesko :
Application No. 12/888,716 : DECISION ACCORDING STATUS
Filed: September 23, 2010 : UNDER 37 CFR 1.47(b)
Attorney Docket No. 101-335USA000 :

This is in response to the renewed petition under 37 CFR 1.47(b), filed June 22, 2011.

The petition under 37 CFR 1.47(b) is **GRANTED**.

Rule 47 applicant filed a petition under 37 CFR 1.47(b) on April 13, 2011. However, the petition was dismissed in a decision mailed on May 16, 2011. The petition was dismissed because applicant did not submit a proper 37 CFR 1.63 declaration. In addition, applicant did not pay the entire $200 petition fee required under 37 CFR 1.47 (applicant only submitted $130).

The petition and declaration have been reviewed and determined to be in compliance with 37 C.F.R. § 1.47(b).

The application is hereby accorded Rule 47 status.

As provided in 37 C.F.R. § 1.47(c), the Office will provide notice of this application's filing to the non-signing inventor at the last known address provided in the petition. Notice will also be provided in the Official Gazette.

The file does not indicate a change of address has been submitted, although the address given on the petition differs from the address of record. If appropriate, a change of address should be filed in accordance with MPEP 601.03. A courtesy copy of this decision is being mailed to the address given on the petition; however, the Office will mail all future correspondence solely to the address of record.

Further correspondence with respect to this matter should be addressed as follows:

By mail: Mail Stop Petitions
Commissioner for Patents
P.O. Box 1450
Alexandria VA 22313-1450

By FAX: (571)273-8300
Attn: Office of Petitions

Telephone inquiries related to this decision may be directed to the undersigned at (571)272-3207.

Cliff Congo
Petitions Attorney
Office of Petitions

cc: Thomas J. Perkowski, Esq.
22 Thorndale Circle
Darien, CT 06820

UNITED STATES PATENT AND TRADEMARK OFFICE

Commissioner for Patents
United States Patent and Trademark Office
P.O. Box 1450
Alexandria, VA 22313-1450
www.uspto.gov

MAILED

JUN 28 2011

OFFICE OF PETITIONS

GEORGE A PLESKO
7 MAGNOLIA WAY
CHADDS FORD PA 19317

In re Application of :
George A. Plesko :
Application No. 12/888,716 :
Filed: September 23, 2010 : LETTER
Title: Molded Elastomeric Flexible :
Elements for Use in a Laser Scanning
Assemblies

Dear Mr. Plesko:

You are named as the sole inventor in the above-identified United States patent application filed under the provisions of 35 USC 116 (United States Code) and 37 CFR 1.47(b), Rules of Practice in Patent Cases. Should a patent be granted on the application you will be designated therein as the sole inventor.

As the named inventor you are entitled to inspect any paper in the file wrapper of the application, order copies of all or any part thereof (at a prepaid cost per 37 CFR 1.19) or make your position of record in the application. Alternatively, you may arrange to do any of the preceding through a registered patent attorney or agent presenting written authorization from you. If you care to join the application, agent of record would presumably assist you. Joining in the application would entail the filing of an appropriate oath or declaration by you pursuant to 37 CFR 1.63.

Telephone inquiries regarding this communication should be directed to Petitions Attorney Cliff Congo at (571)272-3207. Requests for information regarding your application should be directed to the File Information Unit at (703) 308-2733. Information regarding how to pay for and order a copy of the application, or a specific paper in the application, should be directed to the Certification Division at (703) 308-9726 or 1-800-972-6382 (outside the Washington D.C. area).

Cliff Congo
Petitions Attorney
Office of Petitions

UNITED STATES PATENT AND TRADEMARK OFFICE

Commissioner for Patents
United States Patent and Trademark Office
P.O. Box 1450
Alexandria, VA 22313-1450
www.uspto.gov

HONEYWELL/PERKOWSKI
PATENT SERVICES
101 COLUMBIA ROAD
P.O. BOX 2245
MORRISTOWN NJ 07962

MAILED
JUL 06 2011
OFFICE OF PETITIONS

In re Application of
George Plesko
Application No. 12/888,716
Filed: September 23, 2010
Attorney Docket No. H28949

DECISION ON REQUEST FOR REFUND

This is a decision on the Request For Refund filed June 28, 2011.

The request is **GRANTED**.

Applicant files the above request for refund and states that "On April 13, 2011, Attorney for Assignee filed a Petition under 37 CFR 1.47, and paid a petition fee of $130.00 under 37 CFR 17(h), which was paid via credit card on the USPTO website.

On May 16, 2011, the USPTO mailed a Decision Refusing Status under 37 CFR 1.47, which cited that a petition fee of $200.00 under 37 CFR 17(g) was required, and that the balance of $70.00 was due.

On June 22, 2011, Attorney for Assignee filed a Request for Reconsideration of Petition Under 37 CFR 1.47(b) on EFS-Web, but had to pay the entire petition fee of $200.00, instead of the balance of $70.00, because the USPTO website does not allow for partial payment of fees."

In view of the above, the petition fee of $130.00 submitted on April 13, 2011, is being credited to petitioner's credit card account as it is the method in which the fee was paid.

The file does not indicate a change of address has been submitted, although the address given on the request differs from the address of record. If appropriate, a change of address should be filed in accordance with MPEP 601.03. A courtesy copy of this decision is being mailed to the address given on the request; however, the Office will mail all future correspondence solely to the address of record.

Any questions concerning this matter may be directed to the undersigned at (571) 272-3208.

/KOC/
Karen Creasy
Petitions Examiner
Office of Petitions

Cc:

THOMAS J. PERKOWSKI, ESQ., P.C.
22 THORNDAL CIRCLE
DARIEN, CONNECTICUT 06820

UNITED STATES PATENT AND TRADEMARK OFFICE

Commissioner for Patents
United States Patent and Trademark Office
P.O. Box 1450
Alexandria, VA 22313-1450
www.uspto.gov

MAILED

OCT 12 2010

OFFICE OF PETITIONS

REISING ETHINGTON P.C.
PO BOX 4390
TROY MI 48099-4390

In re Application of :
Robert LOKAR :
Application No. 12/888,773 : DECISION ON PETITION
Filed: September 23, 2010 : TO MAKE SPECIAL UNDER
Attorney Docket No. 2103.3001.002 : 37 CFR 1.102(c)(1)
:

This is a decision on the petition under 37 CFR 1.102(c)(1), filed September 23, 2010, to make the above-identified application special based on applicant's age as set forth in M.P.E.P. § 708.02, Section IV.

The petition is **GRANTED**.

A grantable petition to make an application special under 37 CFR 1.102(c)(1) and MPEP § 708.02, Section IV: Applicant's Age must be accompanied by evidence showing that at least one of the applicants is 65 years of age, or more, such as a birth certificate or a statement by applicant. No fee is required

The instant petition includes a declaration statement signed by the applicant, which is evidence showing that at least one of the applicants is 65 years of age or more. Accordingly, the above-identified application has been accorded "special" status.

Telephone inquiries concerning this decision should be directed to the undersigned at (571) 272-6735.

All other inquiries should be directed to the Office of Data Management at (571) 272-4000.

This application is being referred to the Office of Data Management for further processing. This application will be accorded "special" status when pre-examination processing is done.

/DCG/
Diane C. Goodwyn
Petitions Examiner
Office of Petitions

UNITED STATES PATENT AND TRADEMARK OFFICE

Commissioner for Patents
United States Patent and Trademark Office
P.O. Box 1450
Alexandria, VA 22313-1450
www.uspto.gov

BARNES & THORNBURG LLP
600 ONE SUMMIT SQUARE
FORT WAYNE, IN 46802

MAILED
DEC 16 2010
OFFICE OF PETITIONS

In re Application of

Malik M. Hasan, et al.
Application No. 12/888,776
Filed: September 3, 2010
Attorney Docket No. 47789/83758

DECISION ON PETITION
TO MAKE SPECIAL UNDER
37 CFR 1.102(c)(1)

This is a decision on the petition under 37 CFR 1.102(c)(1), filed October 20, 2010, to make the above-identified application special based on applicant's age as set forth in M.P.E.P. § 708.02, Section IV.

The petition is **GRANTED**.

A grantable petition to make an application special under 37 CFR 1.102(c)(1) and MPEP § 708.02, Section IV: Applicant's Age must be accompanied by evidence showing that at least one of the applicants is 65 years of age, or more, such as a birth certificate or a statement by applicant. No fee is required

The instant petition includes a declaration statement signed by applicant Malik M. Hasan. Accordingly, the above-identified application has been accorded "special" status.

Telephone inquiries concerning this decision should be directed to undersigned at 571-272-1642.

All other inquiries concerning either the examination or status of the application should be directed to the Technology Center.

The application is being forwarded to the Technology Center Art Unit 3626 for action on the merits commensurate with this decision.

/AMW/
April M. Wise
Petitions Examiner
Office of Petitions

UNITED STATES PATENT AND TRADEMARK OFFICE

Commissioner for Patents
United States Patent and Trademark Office
P.O. Box 1450
Alexandria, VA 22313-1450
www.uspto.gov

REALD INC. - PATENT DEPARTMENT
BY BAKER & MCKENZIE LLP
2001 ROSS AVENUE, SUITE 2300
DALLAS TX 75201

MAILED

DEC 08 2010

OFFICE OF PETITIONS

In re Application of	:	
Lipton, Lenny et al.	:	
Application No. 12/888,843	:	DECISION ON PETITION
Filed: September 23, 2010	:	TO MAKE SPECIAL UNDER
Attorney Docket No. **95194936.096121**	:	37 CFR 1.102(c)(1)
	:	

This is a decision on the petition under 37 CFR 1.102(c)(1), filed November 05, 2010, to make the above-identified application special based on applicant's age as set forth in M.P.E.P. § 708.02, Section IV.

The petition is **GRANTED**.

A grantable petition to make an application special under 37 CFR 1.102(c)(1) and MPEP § 708.02, Section IV: Applicant's Age must be accompanied by evidence showing that at least one of the applicants is 65 years of age, or more, such as a birth certificate or a statement by applicant. No fee is required

The instant petition includes a statement by Lenny Lipton attesting to his age. Accordingly, the above-identified application has been accorded "special" status.

Telephone inquiries concerning this decision should be directed to Tredelle Jackson at 571-272-2783.

All other inquiries concerning either the examination or status of the application should be directed to the Technology Center.

The application is being forwarded to the Technology Center Art Unit 2624 for action on the merits commensurate with this decision.

/Tredelle D. Jackson/
Paralegal Specialist
Office of Petitions

UNITED STATES PATENT AND TRADEMARK OFFICE

Commissioner for Patents
United States Patent and Trademark Office
P.O. Box 1450Alexandria, VA 22313-1450
www.uspto.gov

KENYON & KENYON LLP
ONE BROADWAY
NEW YORK NY 10004

MAILED

NOV 22 2010

OFFICE OF PETITIONS

In re Application of :
William Brian Lathrop et al. :
Application No. 12/889,003 : DECISION REFUSING STATUS
Filed: September 23, 2010 : UNDER 37 CFR 1.47(a)
Attorney Docket No. **14620/46603** :

This decision is in response to the petition filed October 26, 2010 under 37 CFR 1.47(a).

The petition is **DISMISSED**.

Rule 47 applicant is given TWO MONTHS from the mailing date of this decision to respond, correcting the below-noted deficiencies. Any response should be entitled "Request for Reconsideration of Petition Under 37 CFR 1.47(a)" and may include an oath or declaration executed by the inventor. **Failure to respond will result in abandonment of the application.** Any extensions of time will be governed by 37 CFR 1.136(a).

The above-identified application was filed on September 23, 2010 without an executed oath or declaration. Accordingly, on October 12, a Notice to File Missing Parts of Application, requiring, *inter alia*, an executed oath or declaration and a surcharge for its late filing.

In response, petitioners filed the instant request and a declaration naming Lathrop, Small and Finn as joint inventors. Petitioners assert that joint inventor Finn is now deceased and that his legal representative, Deborah Garcia refuses to sign the declaration for this patent application. The declaration has been signed by Lathrop and Small and has been submitted with the present petition, and the late filing surcharge.

A grantable petition under 37 CFR 1.47(a) requires:

(1) proof that the non-signing inventor, or legal representative thereof, cannot be reached or refuses to sign the oath or declaration after having been presented with the application papers (specification, claims and drawings);

(2) an acceptable oath or declaration in compliance with 35 U.S.C. §§ 115 and 116;

(3) the petition fee; and

(4) a statement of the last known address of the non-signing inventor, or legal representative thereof.

The present petition lacks item (2).

In regards to item (2), the oath or declaration must identify the name, residence, mailing address, and citizenship of the legal representative of the deceased inventor, and state that the legal representative is signing on behalf of the deceased joint inventor. A new oath or declaration in compliance with 37 CFR 1.63 and 1.64, containing the information described in this paragraph, is required.

Furthermore, the declaration provided does not comply with 37 CFR 1,63 in that it: does not identify the complete mailing or post office address of each inventor and it does not identify the citizenship of each inventor.

Further correspondence with respect to this matter should be addressed as follows:

By mail: Mail Stop Petitions
Commissioner for Patents
P.O. Box 1450
Alexandria, VA 22313-1450

By FAX: (571) 273-8300
Office of Petitions

Telephone inquiries concerning this matter may be directed to the undersigned Petitions Attorney at (571) 272-3212.

Patricia Faison-Ball
Senior Petitions Attorney
Office of Petitions

UNITED STATES PATENT AND TRADEMARK OFFICE

Commissioner for Patents
United States Patent and Trademark Office
P.O. Box 1450Alexandria, VA 22313-1450
www.uspto.gov

KENYON & KENYON LLP
ONE BROADWAY
NEW YORK NY 10004

MAILED

MAR 24 2011

OFFICE OF PETITIONS

In re Application of
William Brian Lathrop et al.
Application No. 12/889,003
Filed: September 23, 2010
Attorney Docket No. **14620/46603**

: DECISION REFUSING STATUS
: UNDER 37 CFR 1.47(a)

This decision is in response to the REQUEST FOR RECONSIDERATION OF PETITION UNDER 37 C.F.R. 1.47(a), filed February 3, 2011.

The petition is **GRANTED**.

The above-identified application was filed on September 23, 2010 without an executed oath or declaration. Accordingly, on October 12, 2010 a Notice to File Missing Parts of Application, requiring, *inter alia*, an executed oath or declaration and a surcharge for its late filing was mailed. In response, a petition under 37 CFR 1.47 was filed October 26, 2010 with a declaration naming Lathrop, Small and Finn as joint inventors, the required petition fee and surcharge for late filing; request and payment of the fee for a two (2) month extension of the time for reply to the Notice to File Missing Part. The declaration was signed by Lathrop and Small and petitioners asserted that joint inventor Finn is now deceased and that his legal representative, Deborah Garcia refuses to sign the declaration for this patent application. While the other requirements had been met, the petition was dismissed in a decision mailed November 22, 2010 because the petition lacked item (2), an acceptable oath or declaration in compliance with 35 U.S.C. §§ 115 and 116.

The oath or declaration must indicate that the inventor is deceased and identify the name, residence, mailing address, and citizenship of the legal representative of the deceased inventor, even if the legal representative has refused to sign on behalf of the deceased joint inventor or cannot be located.

The instant request for reconsideration has provided an oath or declaration with the signatures of joint inventors Lathrop and Small and a signature block for the legal representative signing on behalf of the deceased inventor, in compliance with 37 CFR 1.63 and 1.64, and a one month extension of time request, including the appropriate fee.

The above-identified application and papers have been reviewed and found in compliance with 37 CFR 1.47(a). In view thereof, this application is hereby accorded

Rule 1.47(a) status. All requirements under 37 CFR 1.47(a) therefore having been met, as provided in Rule 1.47(c), this Office will forward notice of this application's filing to the Legal Representative at the address given in the petition. Notice of the filing of this application will also be published in the Official Gazette.

This matter is being referred to Technology Center 3663 for examination in due course.

Telephone inquiries concerning this matter may be directed to the undersigned Petitions Attorney at (571) 272-3212.

Patricia Faison-Ball

Patricia Faison-Ball
Senior Petitions Attorney
Office of Petitions

Doc Code: PPH.PCT.652
Document Description: Petition to make special under PCT-Patent Pros Hwy

PTO/SB/20PCT-KR (06-10)
Approved for use through 01/31/2012. OMB 0651-0058
U.S. Patent and Trademark Office; U. S. DEPARTMENT OF COMMERCE
Under the Paperwork Reduction Act of 1995, no persons are required to respond to a collection of information unless it displays a valid OMB control number.

REQUEST FOR PARTICIPATION IN THE PATENT COOPERATION TREATY - PATENT PROSECUTION HIGHWAY (PCT-PPH) PILOT PROGRAM BETWEEN THE KOREAN INTELLECTUAL PROPERTY OFFICE (KIPO) AND THE USPTO

Application No:	12/889007	Filing date:	09/23/2010
First Named Inventor:	Mandecki		
Title of the Invention:	APPARATUS AND METHOD TO DELIVER A MICROCHIP		

THIS REQUEST FOR PARTICIPATION IN THE PCT-PPH PILOT PROGRAM ALONG WITH THE REQUIRED DOCUMENTS MUST BE SUBMITTED VIA EFS-WEB. INFORMATION REGARDING EFS-WEB IS AVAILABLE AT HTTP://WWW.USPTO.GOV/EBC/EFS_HELP.HTML

APPLICANT HEREBY REQUESTS PARTICIPATION IN THE PCT-PPH PROGRAM AND PETITIONS TO MAKE THE ABOVE-IDENTIFIED APPLICATION SPECIAL UNDER THE PCT-PPH PROGRAM.

The above-identified application is (1) a national stage entry of the corresponding PCT application, or (2) a national stage entry of another PCT application which claims priority to the corresponding PCT application, or (3) a national application that claims domestic/ foreign priority to the corresponding PCT application, or (4) a national application which forms the basis for the priority claim in the corresponding PCT application, or (5) a continuing application of a U.S. application that satisfies one of (1) to (4) above, or (6) a U.S. application that claims domestic benefit to a U.S. provisional application which forms the basis for the priority claim in the corresponding PCT application.

The corresponding PCT application number(s) is/are: PCT/US2010/049942

The international filing date of the corresponding PCT application(s) is/are:

23 Sep. 2010

I. List of Required Documents:

a. **A copy of the latest international work product (WO/ISA, WO/IPEA, or IPER) in the above–identified corresponding PCT application(s)**

☑ Is attached.

☐ Is not attached because the document is already in the U.S. application.

b. **A copy of all claims which were indicated as having novelty, inventive step and industrial applicability in the above-identified corresponding PCT application(s).**

☑ Is attached.

☐ Is not attached because the document is already in the U.S. application.

c. **English translations of the documents in a. and b. above are attached (if the documents are not in the English language). A statement that the English translation is accurate is attached for the document in b. above.**

This collection of information is required by 35 U.S.C. 119, 37 CFR 1.55, and 37 CFR 1.102(d). The information is required to obtain or retain a benefit by the public, which is to file (and by the USPTO to process) an application. Confidentiality is governed by 35 U.S.C. 122 and 37 CFR 1.11 and 1.14. This collection is estimated to take 2 hours to complete, including gathering, preparing, and submitting the completed application form to the USPTO. Time will vary depending upon the individual case. Any comments on the amount of time you require to complete this form and/or suggestions for reducing this burden should be sent to the Chief Information Officer, U.S. Patent and Trademark Office, U.S. Department of Commerce, P.O. Box 1450, Alexandria, VA 22313-1450. DO NOT SEND FEES OR COMPLETED FORMS TO THIS ADDRESS.

PTO/SB/20PCT-KR (06-10)
Approved for use through 01/31/2012. OMB 0651-0058
U.S.Patent and Trademark Office; U.S. DEPARTMENT OF COMMERCE
Under the Paperwork Reduction Act of 1995, no persons are required to respond to a collection of information unless it displays a valid OMB control number.

REQUEST FOR PARTICIPATION IN THE PCT-PPH PILOT PROGRAM BETWEEN THE KIPO AND THE USPTO

(continued)

Application No.:	12/889007
First Named Inventor:	Mandecki

d. **(1) An information disclosure statement listing the documents cited in the international work products (ISR, WO/ISA, WO/IPEA, IPER) of the corresponding PCT application.**

☑ Is attached

☐ Has already been filed in the above-identified U.S. application on _____

(2) Copies of all documents (except) for U.S. patents or U.S. patent application publications)

☑ Are attached.

☐ Have already been filed in the above-identified U.S. application on _____

II. Claims Correspondence Table:

Claims in US Application	Patentable Claims in the corresponding PCT Application	Explanation regarding the correspondence
1	1	Same
2		By dependence US claim 2 is clearly within the scope of PCT Claim 1
3		By dependence US claim 3 is clearly within the scope of PCT Claim 1
4		By dependence US claim 4 is clearly within the scope of PCT Claim 1
5		By dependence US claim 5 is clearly within the scope of PCT Claim 1
6	2	Same
7	3	Same
8	4	Same
9	5	Same
10	6	Same
11		By dependence US claim 11 is clearly within the scope of PCT Claims 1 and 6
12		By dependence US claim 12 is clearly within the scope of PCT Claim 1 and 6
13		By dependence US claim 13 is clearly within the scope of PCT Claim 1 and 6
14	10	Same
15	11	Same
16	12	Same
17	13	Same
18	14	Same

III. All the claims in the US application sufficiently correspond to the patentable claims in the corresponding PCT application.

Signature /Arthur E. Jackson/	Date July 1, 2011
Name (Print/Typed) Arthur E Jackson	Registration Number 34,354

CONTINUATION SHEETS:

MISC. NOTES

PCT claims 7-9 are said in Box No. VII of the Written Opinion to have defects in their multiple dependency. None of the US claims have multiple dependency, and all are ultimately dependent from, and hence narrower than, US claim 1 (which corresponds to PCT claim 1).

UNITED STATES PATENT AND TRADEMARK OFFICE

UNITED STATES DEPARTMENT OF COMMERCE
United States Patent and Trademark Office
Address: COMMISSIONER FOR PATENTS
P.O. Box 1450
Alexandria, Virginia 22313-1450
www.uspto.gov

APPLICATION NO.	FILING DATE	FIRST NAMED INVENTOR	ATTORNEY DOCKET NO.	CONFIRMATION NO.
12/889,007	09/23/2010	Wlodek Mandecki	PHSQ001	5511

39731 7590 07/11/2011

Moser Taboada / Art Jackson
1030 BROAD STREET, SUITE 203
SHREWSBURY, NJ 07702

EXAMINER	
ART UNIT	PAPER NUMBER
3731	

MAIL DATE	DELIVERY MODE
07/11/2011	PAPER

Please find below and/or attached an Office communication concerning this application or proceeding.

The time period for reply, if any, is set in the attached communication.

UNITED STATES PATENT AND TRADEMARK OFFICE

Commissioner for Patents
United States Patent and Trademark Office
P.O. Box 1450
Alexandria, VA 22313-1450
www.uspto.gov

Moser Taboada / Art Jackson
1030 BROAD STREET, SUITE 203
SHREWSBURY NJ 07702

In re Application of: MANDECKI, WLODEK Serial No.: 12/889007 Filed: September 23, 2010 Attorney Docket No. : PHSQ001 Title: APPARATUS AND METHOD TO DELIVER A MICROCHIP	: DECISION ON A REQUEST TO : PARTICIPATE IN PATENT : PCT/PROSECUTION HIGHWAY : PROGRAM AND PETITION : TO MAKE SPECIAL UNDER : CFR 1.102(a)

This is a decision on the request to participate in the Patent Prosecution Highway (PPH) program and the petition under 37 CFR 1.102(a), filed July 1, 2011 to make the above-identified application special.

The request and petition are **granted**.

A grantable request to participate in the PPH pilot program and petition to make special require:

(1) The U.S. application must validly claim priority under 35 U.S.C. 119(a) to one or more PCT applications filed in the JPO, EPO, KIPO, or USPTO;
(2) Applicant must submit a copy of the allowable/patentable claim(s) from the PCT application(s) latest international work product (the written opinion or the IPER) along with an English translation thereof and a statement that the English translation is accurate;
(3) All the claims in the U.S. application must sufficiently correspond or be amended to sufficiently correspond to the allowable/patentable claim(s) in the PCT application(s);
(4) Examination of the U.S. application has not begun;
(5) Applicant must submit a copy of the latest international work product from the PCT application containing the allowable/patentable claim(s) along with an English translation thereof and a statement that the English translation is accurate; and
(6) Applicant must submit an IDS listing the documents cited by the PCT examiner in the international work product along with copies of documents except U.S. patents or U.S. patent application publications.

In light of the petition being properly submitted, the request to participate in the PPH program and the petition comply with the above requirements. Accordingly, the above-identified application has been accorded "special" status.

The applicant is encouraged to cite and submit all relevant prior art references, if any, to facilitate examination in this application.

Response must be filed via EFS-Web. Telephone inquiries concerning this decision should be directed to Henry C. Yuen, at 571-272-4856.

Petition is **granted**.

/Henry C. Yuen/

Henry C. Yuen
Special Programs Examiner
Technology Center 3700
Tel: 571-272-4856