Doc Code: PET.GREEN
Document Description: Petition for Green Tech Pilot

PTO/SB/420 (11-10)
Approved for use through 01/31/2011. OMB 0651-0062
U.S. Patent and Trademark Office; U. S. DEPARTMENT OF COMMERCE
Under the Paperwork Reduction Act of 1995, no persons are required to respond to a collection of information unless it displays a valid OMB control number.

PETITION TO MAKE SPECIAL UNDER THE GREEN TECHNOLOGY PILOT PROGRAM

Attorney Docket Number: 81196i37	Application Number (if known): 12912095	Filing date: 2010-10-26
First Named Inventor: Yisun Cheng et al.		
Title: EMISSION SCR NOX AFTERTREATMENT SYSTEM HAVING REDUCED SO3 GENERATION AND IMPROVED DURABILITY		

APPLICANT HEREBY REQUESTS TO PARTICIPATE IN THE GREEN TECHNOLOGY PILOT PROGRAM FOR THE ABOVE-IDENTIFIED APPLICATION. See Instruction Sheet on page 2.

This petition must be timely filed electronically using the USPTO electronic filing system, EFS-Web.

1. By filing this petition:

   Applicant is requesting early publication: Applicant hereby requests early publication under 37 CFR 1.219 and the publication fee set forth in 37 CFR 1.18(d) accompanies this request.

2. By filing this petition: applicant is agreeing to make an election without traverse in a telephonic interview and elect an invention that meets the eligibility requirements for the Green Technology Pilot Program, if the Office determines that the claims are not obviously directed to a single invention. See Instruction Sheet.

3. This request is accompanied by statements of special status for the eligibility requirement.

4. The application contains no more than three (3) independent claims and twenty (20) total claims.

5. The application does not contain any multiple dependent claims.

6. Other attachments: _____

Signature /Michael S. Brodbine/	Date 2011-03-09
Name (Print/Typed) Michael S. Brodbine	Registration Number 38392

Note: *Signatures of all the inventors or assignees of record of the entire interest or their representative(s) are required in accordance with 37 CFR 1.33 and 11.18. Please see 37 CFR 1.4(d) for the form of the signature. If necessary, submit multiple forms for more than one signature see below*.*

☐ *Total of ..... forms are submitted.

The information is required to obtain or retain a benefit by the public which is to file (and by the USPTO to process) an application. Confidentiality is governed by 35 U.S.C. 122 and 37 CFR 1.11 and 1.14. This collection is estimated to take 12 hours to complete, including gathering, preparing, and submitting the completed application form to the USPTO. Time will vary depending upon the individual case. Any comments on the amount of time you require to complete this form and/or suggestions for reducing this burden, should be sent to the Chief Information Officer, U.S. Patent and Trademark Office, U.S. Department of Commerce, P.O. Box 1450, Alexandria, VA 22313-1450. DO NOT SEND FEES OR COMPLETED FORMS TO THIS ADDRESS. **SEND TO: Commissioner for Patents, P.O. Box 1450, Alexandria, VA 22313-1450.**

If you need assistance in completing the form, call 1-800-PTO-9199 and select option 2.

Under the Paperwork Reduction Act of 1995, no persons are required to respond to a collection of information unless it displays a valid OMB control number.

Instruction Sheet for Petition to Make Special Under the Green Technology Pilot Program

(Not to be Submitted to the USPTO)

The following is a summary of the requirements (for more information see the notices (i) "Pilot Program for Green Technologies Including Greenhouse Gas Reduction," (ii) "Elimination of Classification Requirement in the Green Technology Pilot Program," and (iii) "Expansion and Extension of the Green Technology Pilot Program," available on the USPTO web site at http://www.uspto.gov/patents/init_events/green_tech.jsp):

1) The application must be a non-reissue, non-provisional utility application filed under 35 U.S.C. 111 (a), or an international application that has entered the national stage in compliance with 35 U.S.C. 371, irrespective of the filing date of the application. Reexamination proceedings are excluded from this pilot program.

2) The application must contain three or fewer independent claims and twenty or fewer total claims. The application must not contain any multiple dependent claims. For an application that contains more than three independent claims or twenty total claims, or multiple dependent claims, applicant must file a preliminary amendment in compliance with 37 CFR 1.121 to cancel the excess claims and/or the multiple dependent claims at the time the petition to make special is filed.

3) The claims must be directed to a single invention that materially enhances the quality of the environment, or that materially contributes to: (1) the discovery or development of renewable energy resources; (2) the more efficient utilization and conservation of energy resources; or (3) green house gas emission reduction (see the eligibility requirements of sections II and III of the notice (i) cited above). The petition must include a statement that, if the USPTO determines that the claims are directed to multiple inventions (e.g., in a restriction requirement), applicant will agree to make an election without traverse in a telephonic interview, and elect an invention that meets the eligibility requirements in section II or III of the notice (i) cited above.

4) The petition to make special must be timely filed electronically using the USPTO electronic filing system, EFS-Web, and selecting the document description of "Petition for Green Tech Pilot" on the EFS-Web screen. Applicant should use form PTO/SB/420, which is available as a Portable Document Format (PDF) fillable form in EFS-Web and on the USPTO Web site.

5) The petition to make special must be filed at least one day prior to the date that a first Office action (which may be an Office action containing only a restriction requirement) appears in the Patent Application Information Retrieval (PAIR) system. Applicant may check the status of the application using PAIR.

6) The petition to make special must be accompanied by a request for early publication in compliance with 37 CFR 1.219 and the publication fee set forth in 37 CFR 1.18(d).

Privacy Act Statement

The **Privacy Act of 1974 (P.L. 93-579)** requires that you be given certain information in connection with your submission of the attached form related to a patent application or patent. Accordingly, pursuant to the requirements of the Act, please be advised that: (1) the general authority for the collection of this information is 35 U.S.C. 2(b)(2); (2) furnishing of the information solicited is voluntary; and (3) the principal purpose for which the information is used by the U.S. Patent and Trademark Office is to process and/or examine your submission related to a patent application or patent. If you do not furnish the requested information, the U.S. Patent and Trademark Office may not be able to process and/or examine your submission, which may result in termination of proceedings or abandonment of the application or expiration of the patent.

The information provided by you in this form will be subject to the following routine uses:

1. The information on this form will be treated confidentially to the extent allowed under the Freedom of Information Act (5 U.S.C. 552) and the Privacy Act (5 U.S.C 552a). Records from this system of records may be disclosed to the Department of Justice to determine whether disclosure of these records is required by the Freedom of Information Act.
2. A record from this system of records may be disclosed, as a routine use, in the course of presenting evidence to a court, magistrate, or administrative tribunal, including disclosures to opposing counsel in the course of settlement negotiations.
3. A record in this system of records may be disclosed, as a routine use, to a Member of Congress submitting a request involving an individual, to whom the record pertains, when the individual has requested assistance from the Member with respect to the subject matter of the record.
4. A record in this system of records may be disclosed, as a routine use, to a contractor of the Agency having need for the information in order to perform a contract. Recipients of information shall be required to comply with the requirements of the Privacy Act of 1974, as amended, pursuant to 5 U.S.C. 552a(m).
5. A record related to an International Application filed under the Patent Cooperation Treaty in this system of records may be disclosed, as a routine use, to the International Bureau of the World Intellectual Property Organization, pursuant to the Patent Cooperation Treaty.
6. A record in this system of records may be disclosed, as a routine use, to another federal agency for purposes of National Security review (35 U.S.C. 181) and for review pursuant to the Atomic Energy Act (42 U.S.C. 218(c)).
7. A record from this system of records may be disclosed, as a routine use, to the Administrator, General Services, or his/her designee, during an inspection of records conducted by GSA as part of that agency's responsibility to recommend improvements in records management practices and programs, under authority of 44 U.S.C. 2904 and 2906. Such disclosure shall be made in accordance with the GSA regulations governing inspection of records for this purpose, and any other relevant (*i.e.*, GSA or Commerce) directive. Such disclosure shall not be used to make determinations about individuals.
8. A record from this system of records may be disclosed, as a routine use, to the public after either publication of the application pursuant to 35 U.S.C. 122(b) or issuance of a patent pursuant to 35 U.S.C. 151. Further, a record may be disclosed, subject to the limitations of 37 CFR 1.14, as a routine use, to the public if the record was filed in an application which became abandoned or in which the proceedings were terminated and which application is referenced by either a published application, an application open to public inspection or an issued patent.
9. A record from this system of records may be disclosed, as a routine use, to a Federal, State, or local law enforcement agency, if the USPTO becomes aware of a violation or potential violation of law or regulation.

IN THE UNITED STATES PATENT AND TRADEMARK OFFICE

In re application of:

YISUN CHENG ET AL.

Group Art Unit: 3748

Examiner: Unknown

Serial No.: 12/912,095

Filed: October 26, 2010

For: EMISSION SCR NOX AFTERTREATMENT SYSTEM HAVING REDUCED SO3 GENERATION AND IMPROVED DURABILITY

Attorney Docket No.: 81196937

STATEMENT SUPPORTING ELIGBILITY REQUIREMENT OF THE GREEN TECHNOLOGY PILOT PROGRAM

Commissioner for Patents
U.S. Patent and Trademark Office
P.O. Box 1450
Alexandria, VA 22313-1450

Dear Sir:

This Statement of Special Status for the Eligibility Requirement is being filed concurrently with a Petition To Make Special Under the Green Technology Pilot Program (PTO/SB/420), and pursuant to the requirements of 74 Fed. Reg. 64,666 (Dec. 8, 2009), as amended by 75 Fed. Reg. 28, 554 (May 21, 2010) and 75 Fed. Reg. 68049 (Nov. 10, 2010).

Applicant respectfully submits that the above-identified application is eligible for the "Green Technology Pilot Program" as materially contributing to the more efficient utilization and conservation of energy resources or the reduction of greenhouse gas emissions.

As explained in the specification, exhaust from a combustion engine typically contains a variety of combustion components or gases such as unburned hydrocarbon (HC), carbon monoxide (CO), particulate matter (PM), nitric oxide (NO), and nitrogen dioxide (NO_2), with NO and NO_2, collectively referred to as nitrogen oxide or NO_x.

Exhaust emission control or treatment systems have used Selective Catalytic Reduction (SCR) catalysts with NH_3 for NO_x control on engines, such as lean-burn gasoline engines and diesel engines. SCR catalysts use base metals to promote the reaction between NO_x and NH_3 to produce N_2 under lean conditions. Moreover, exhaust emission control systems have employed oxidation catalysts, such as a diesel oxidation catalyst (DOC), to reduce the amount of HC and CO in the exhaust gas.

Base metal/zeolite SCR catalysts are among the leading candidates for treatment of NO_x emissions for North American diesel applications using urea as a reducing agent. It is known that these SCR catalysts are sensitive to sulfur poisoning, especially the copper-zeolite formulations. Even with the use of ultra low sulfur fuel, sulfur poisoning is still a durability issue that impacts on SCR catalyst activity.

Sulfur is usually present as SO_2 in the feed gas. Insofar as diesel oxidation catalysts (DOCs) will be employed upstream of the SCR catalysts for most applications, it is likely that a portion of the SO_2 will be oxidized into SO_3.

There is thus a continuing need to provide an emission treatment system that provides a relatively high NO_x reduction efficiency while minimizing system complexity and substantially avoiding the effects of SO_3 aging. Such a system can reduce SO_3 generation and thus minimize catalyst deactivation by SO_3 aging.

The claimed invention is directed to an emission treatment system that includes an exhaust passage for transporting the exhaust from the engine, a particulate filter disposed within the passage, a selective catalytic reduction (SCR) catalyst disposed within the passage, and an oxidation catalyst disposed in the passage upstream of the SCR catalyst, wherein the oxidation catalyst has platinum group metal (PGM), and at least 90 wt. % of the platinum group metal comprising palladium (Pd).

A purpose of the emission treatment system is to reduce gases from the exhaust of an engine.

Because the claimed invention is an improvement to emission treatment systems to reduce gases from the exhaust of an engine, the claimed invention materially contributes to the reduction of greenhouse gas emissions.

The Application is a non-reissue, non-provisional utility application filed under 35 U.S.C. §111(a). The Application contains no more than three (3) independent claims and twenty (20) total claims. The Application does not contain multiple dependent claims. A first Office action has not yet appeared in the Patent Application Information Retrieval System (PAIR).

The publication fee under 37 C.F.R. § 1.18(d) of $300 has been paid upon filing. Please charge any additional required fees to Deposit Account No. 06-1510 (Ford Global Technologies, LLC).

Respectfully submitted,

YISUN CHENG ET AL.

By:_____

Michael S. Brodbine
Reg. No. 38,392
Attorney for Applicant

Date: March 9, 2011

BROOKS KUSHMAN P.C.
1000 Town Center, 22nd Floor
Southfield, MI 48075-1238
Phone: 248-358-4400
Fax: 248-358-3351

UNITED STATES PATENT AND TRADEMARK OFFICE

UNITED STATES DEPARTMENT OF COMMERCE
United States Patent and Trademark Office
Address: COMMISSIONER FOR PATENTS
P.O. Box 1450
Alexandria, Virginia 22313-1450
www.uspto.gov

APPLICATION NO.	FILING DATE	FIRST NAMED INVENTOR	ATTORNEY DOCKET NO.	CONFIRMATION NO.
12/912,095	10/26/2010	Yisun Cheng	81196937	1468

28395 7590 03/22/2011
BROOKS KUSHMAN P.C./FGTL
1000 TOWN CENTER
22ND FLOOR
SOUTHFIELD, MI 48075-1238

EXAMINER

ART UNIT	PAPER NUMBER
3748	

MAIL DATE	DELIVERY MODE
03/22/2011	PAPER

Please find below and/or attached an Office communication concerning this application or proceeding.

The time period for reply, if any, is set in the attached communication.

UNITED STATES PATENT AND TRADEMARK OFFICE

Commissioner for Patents
United States Patent and Trademark Office
P.O. Box 1450
Alexandria, VA 22313-1450
www.uspto.gov

BROOKS KUSHMAN P.C./FGTL
1000 TOWN CENTER
22ND FLOOR
SOUTHFIELD MI 48075-1238

In re Application of	:	
CHENG, YISUN et al	:	DECISION ON PETITION
Application No. 12/912,095	:	TO MAKE SPECIAL UNDER
Filed: Oct. 26, 2010	:	THE GREEN TECHNOLOGY
Attorney Docket No. 81196937	:	PILOT PROGRAM

This is a decision on the petition under 37 CFR 1.102, filed March 9, 2011 to make the above-identified application special under the pilot program for applications pertaining to Green Technologies as set forth in 74 Federal Register Notice 64666 (December 8, 2009) and amended by 75 Federal Register Notice 28554 (May 21, 2010) and 75 Federal Register Notice 69049 (November 10, 2010).

The petition is **granted.**

If reconsideration of this decision is desired, a petition for reconsideration must be filed within ONE (1) MONTH OR THIRTY (30) DAYS from the mail date of this decision, whichever is longer. No extension of this time limit can be granted under 37 CFR 1.136(a) or (b). The petition for reconsideration should include an exhaustive attempt to provide the lacking item(s) noted below, since, after a decision on the petition for reconsideration, no further reconsideration or review of the matter will be undertaken by the Director.

A grantable petition to make an application special under 37 CFR 1.102 and the pilot program as set forth in 74 FR 64666 must be directed to a nonprovisional application filed under 35 USC 111(a) or be a national stage entry under 35 USC 371, exclusive of any reissue applications.

In order to qualify for special status, the following requirements must be met. 1) The application must have no more than 3 independent claims and no more than 20 total claims. 2) The application must not contain any multiple dependent claims. 3) The petition must state the basis for seeking special status, i.e., the claimed invention either: A) materially enhances the quality of the environment or B) materially contributes to: i) the discovery or development of renewable energy resources, ii) the more efficient utilization and conservation of energy resources, or iii) greenhouse gas emission reduction. 4) If the disclosure is not clear on its face that the claimed

invention materially contributes under category (A) or (B), the petition must be accompanied by a statement by the applicant, assignee, or an attorney/agent registered to practice before the Office explaining how the materiality standard is met. 5) A statement that applicant will agree to make an election without traverse in a telephonic interview if a restriction requirement is made by the examiner. 6) The petition to make special must be filed electronically. 7) The petition must be filed at least one day prior to the date that a first Office Action appears in the Patent Application Information Retrieval (PAIR) system. 8) The petition must be accompanied by a request for early publication in compliance with 37 CFR 1.219 and include the publication fee as set forth in 37 CFR 1.18(d).

The requirement for a fee for consideration of the petition to make special for applications pertaining to Green Technologies has been waived.

The instant petition complies with items 1 – 8 above. Accordingly, the above-identified application has been accorded "special" status.

Telephone inquires concerning this decision should be directed to Henry C. Yuen at 571-272-4856.

This application will be forwarded to the Technology Center Art Unit 3748 for action on the merits commensurate with this decision.

/Henry C. Yuen/

Henry C. Yuen
Quality Assurance Specialist
Technology Center TC 3700

Doc code : PET.OP.AGE
Description : Petition to make special based on Age/Health

PTO/SB/130 (07-09)
Approved for use through 07/31/2012. OMB 0651- 0031
U.S. Patent and Trademark Office; U.S. DEPARTMENT OF COMMERCE
Under the Paperwork Reduction Act of 1995, no persons are required to respond to a collection of information unless it contains a valid OMB control number

PETITION TO MAKE SPECIAL BASED ON AGE FOR ADVANCEMENT OF EXAMINATION UNDER 37 CFR 1.102(c)(1)

Application Information

Application Number	12/912,171	Confirmation Number	1584	Filing Date	2010-10-26
Attorney Docket Number (optional)	8091.3003.002	Art Unit	1616	Examiner	Unknown
First Named Inventor	John Alex Lopes				
Title of Invention	Cleaning, Disinfecting And Microbicidal Compositions				

Attention: Office of Petitions
An application may be made special for advancement of examination upon filing of a petition showing that the applicant is 65 years of age, or more. No fee is required with such a petition. See 37 CFR 1.102(c)(1) and MPEP 708.02 (IV).

APPLICANT HEREBY PETITIONS TO MAKE SPECIAL FOR ADVANCEMENT OF EXAMINATION IN THIS APPLICATION UNDER 37 CFR 1.102(c)(1) and MPEP 708.02 (IV) ON THE BASIS OF THE APPLICANT'S AGE.

A grantable petition requires one of the following items:
(1) Statement by one named inventor in the application that he/she is 65 years of age, or more; or
(2) Certification by a registered attorney/agent having evidence such as a birth certificate, passport, driver's license, etc. showing one named inventor in the application is 65 years of age, or more.

Name of Inventor who is 65 years of age, or older

Given Name	Middle Name	Family Name	Suffix
John	Alex	Lopes	

A signature of the applicant or representative is required in accordance with 37 CFR 1.33 and 10.18.
Please see 37 CFR 1.4(d) for the format of the signature.

Select (1) or (2) :

○ (1) I am an inventor in this application and I am 65 years of age, or more.

● (2) I am an attorney or agent registered to practice before the Patent and Trademark Office, and I certify that I am in possession of evidence, and will retain such in the application file record, showing that the inventor listed above is 65 years of age, or more.

Signature	/Richard W. Hoffmann, Reg. No. 33711/	Date (YYYY-MM-DD)	2011-12-28
Name	RICHARD W. HOFFMANN	Registration Number	33711

PTO/SB/130 (07-09)
Approved for use through 07/31/2012. OMB 0651- 0031
U.S. Patent and Trademark Office; U.S. DEPARTMENT OF COMMERCE
Under the Paperwork Reduction Act of 1995, no persons are required to respond to a collection of information unless it contains a valid OMB control number

Privacy Act Statement

The Privacy Act of 1974 (P.L. 93-579) requires that you be given certain information in connection with your submission of the attached form related to a patent application or patent. Accordingly, pursuant to the requirements of the Act, please be advised that: (1) the general authority for the collection of this information is 35 U.S.C. 2(b)(2); (2) furnishing of the information solicited is voluntary; and (3) the principal purpose for which the information is used by the U.S. Patent and Trademark Office is to process and/or examine your submission related to a patent application or patent. If you do not furnish the requested information, the U.S. Patent and Trademark Office may not be able to process and/or examine your submission, which may result in termination of proceedings or abandonment of the application or expiration of the patent.

The information provided by you in this form will be subject to the following routine uses:

1. The information on this form will be treated confidentially to the extent allowed under the Freedom of Information Act (5 U.S.C. 552) and the Privacy Act (5 U.S.C. 552a). Records from this system of records may be disclosed to the Department of Justice to determine whether the Fr eedom of Information Act requires disclosure of these records.

2. A record from this system of records may be disclosed, as a routine use, in the course of presenting evidence to a court, magistrate, or administrative tribunal, including disclosures to opposing counsel in the course of settlement negotiations.

3. A record in this system of records may be disclosed, as a routine use, to a Member of Congress submitting a request involving an individual, to whom the record pertains, when the individual has requested assistance from the Member with respect to the subject matter of the record.

4. A record in this system of records may be disclosed, as a routine use, to a contractor of the Agency having need for the information in order to perform a contract. Recipients of information shall be required to comply with the requirements of the Privacy Act of 1974, as amended, pursuant to 5 U.S.C. 552a(m).

5. A record related to an International Application filed under the Patent Cooperation Treaty in this system of records may be disclosed, as a routine use, to the International Bureau of the World Intellectual Property Organization, pursuant to the Patent Cooperation Treaty.

6. A record in this system of records may be disclosed, as a routine use, to another federal agency for purposes of National Security review (35 U.S.C. 181) and for review pursuant to the Atomic Energy Act (42 U.S.C. 218(c)).

7. A record from this system of records may be disclosed, as a routine use, to the Administrator, General Services, or his/her designee, during an inspection of records conducted by GSA as part of that agency's responsibility to recommend improvements in records management practices and programs, under authority of 44 U.S.C. 2904 and 2906. Such disclosure shall be made in accordance with the GSA regulations governing inspection of records for this purpose, and any other relevant (i.e., GSA or Commerce) directive. Such disclosure shall not be used to make determinations about indivi duals.

8. A record from this system of records may be disclosed, as a routine use, to the public after either publication of the application pursuant to 35 U.S.C. 122(b) or issuance of a patent pursuant to 35 U.S.C. 151. Further, a record may be disclosed, subject to the limitations of 37 CFR 1.14, as a routine use, to the public if the record was filed in an application which became abandoned or in which the proceedings were terminated and which application is referenced by either a published application, an application open to public inspections or an issued patent.

9. A record from this system of records may be disclosed, as a routine use, to a Federal, State, or local law enforcement agency, if the USPTO becomes aware of a violation or potential violation of law or regulation.

UNITED STATES PATENT AND TRADEMARK OFFICE

Commissioner for Patents
United States Patent and Trademark Office
P.O. Box 1450
Alexandria, VA 22313-1450
www.uspto.gov

In re Application of
John Alex Lopes

Application No. 12912171

Filed: October 26,2010

Attorney Docket No. 8091.3003.002

:DECISION ON PETITION TO MAKE SPECIAL
:UNDER 37 CFR 1.102(c)(1)

This is a decision on the electronic petition under 37 CFR 1.102 (c)(1), filed 28-DEC-2011 to make the above-identified application special based on applicant's age as set forth in MPEP § 708.02, Section IV.

The petition is **GRANTED**.

A grantable petition to make an application special under 37 CFR 1.102(c)(1), MPEP § 708.02, Section IV: Applicant's Age must include a statement by applicant or a registered practitioner having evidence that applicant is at least 65 years of age. No fee is required.

Accordingly, the above-identified application has been accorded "special" status and will be taken up for action by the examiner upon the completion of all pre-examination processing.

Telephone inquiries concerning this electronic decision should be directed to the Electronic Business Center at 866-217-9197.

All other inquiries concerning either the examination or status of the application should be directed to the Technology Center.

UNITED STATES PATENT AND TRADEMARK OFFICE

UNITED STATES DEPARTMENT OF COMMERCE
United States Patent and Trademark Office
Address: COMMISSIONER FOR PATENTS
P.O. Box 1450
Alexandria, Virginia 22313-1450
www.uspto.gov

APPLICATION NO.	FILING DATE	FIRST NAMED INVENTOR	ATTORNEY DOCKET NO.	CONFIRMATION NO.
12/912,175	10/26/2010	David Ernest Hartley	PA-6805-RAP	1588

9896 7590 03/10/2011
COOK GROUP PATENT OFFICE
P.O. BOX 2269
BLOOMINGTON, IN 47402

EXAMINER

ART UNIT	PAPER NUMBER
3738	

MAIL DATE	DELIVERY MODE
03/10/2011	PAPER

Please find below and/or attached an Office communication concerning this application or proceeding.

The time period for reply, if any, is set in the attached communication.

UNITED STATES PATENT AND TRADEMARK OFFICE

Commissioner for Patents
United States Patent and Trademark Office
P.O. Box 1450
Alexandria, VA 22313-1450
www.uspto.gov

COOK GROUP PATENT OFFICE
P.O. BOX 2269
BLOOMINGTON IN 47402

In re Application of	:	
HARTLEY, DAVID ERNEST et al	:	DECISION ON REQUEST TO
Application No. 12/912,175	:	PARTICIPATE IN PATENT
Filed: Oct. 26, 2010	:	PROSECUTION HIGHWAY
Attorney Docket No. PA/6805/RAP	:	PILOT PROGRAM AND PETITION
For: SIDE BRANCH STENT GRAFT	:	TO MAKE SPECIAL UNDER
	:	37 CFR 1.102(d)

This is a decision on the renewed request to participate in the Patent Prosecution Highway (PPH) pilot program under 37 CFR 1.102(d), filed November 2, 2010, to make the above-identified application special.

The request and petition are GRANTED.

A grantable request to participate in the PPH pilot program and petition to make special require:

(1) The U.S. application must validly claim priority under 35 U.S.C. 119(a) to one or more applications filed in the IPAU;
(2) Applicant must submit a copy of the allowable/patentable claim(s) from the IPAU application(s);
(3) All the claims in the U.S. application must sufficiently correspond or be amended to sufficiently correspond to the allowable/patentable claim(s) in the IPAU application(s);
(4) Examination of the U.S. application has not begun;
(5) Applicant must submit a copy of all the office actions from each of the IPAU application(s) containing the allowable/patentable claim(s); and
(6) Applicant must submit an IDS listing the documents cited by the IPAU examiner in the IPAU office action along with copies of documents except U.S. patents or U.S. patent application publications.

The request to participate in the PPH pilot program and petition comply with the above requirements. Accordingly, the above-identified application has been accorded "special" status.

Telephone inquiries concerning this decision should be directed to Henry C. Yuen at 571-272-4856.

All other inquiries concerning the examination or status of the application should be directed to the Supervisory Patent Examiner, Corrine McDermott at 571-272-4754.

This application will be being forwarded to the examiner for action on the merits commensurate with this decision.

Petition is **granted**.

/Henry C. Yuen/

Henry C. Yuen, Special Programs Examiner
Technology Center 3700 – Mechanical Engineering,
Manufacturing and Products
571-272-4856

UNITED STATES PATENT AND TRADEMARK OFFICE

Commissioner for Patents
United States Patent and Trademark Office
P.O. Box 1450
Alexandria, VA 22313-1450
www.uspto.gov

STROOCK & STROOCK & LAVAN LLP
180 MAIDEN LANE
NEW YORK, NY 10038

MAILED

MAR 26 2012

OFFICE OF PETITIONS

In re Application of

James Cornwell
Application No. 12/912,274
Filed: October 26, 2010
Attorney Docket No. 002561/0047

DECISION ON PETITION
TO WITHDRAW
FROM RECORD

This is a decision on the Request to Withdraw as attorney or agent of record under 37 C.F.R. § 1.36(b), filed February 29, 2012.

The request is **APPROVED**.

A grantable request to withdraw as attorney/agent of record must be signed by every attorney/agent seeking to withdraw or contain a clear indication that one attorney is signing on behalf of another/others.

The request was signed by Brian M. Rothery on behalf of all attorneys of record who are associated with customer No. 26610. All attorneys/agents associated with the Customer Number 26610 have been withdrawn. Applicant is reminded that there is no attorney of record at this time.

The correspondence address of record has been changed and the new correspondence address is the address indicated below.

There are no pending Office actions at the present time.

Telephone inquiries concerning this decision should be directed to undersigned at 571-272-1642. All other inquiries concerning the examination or status of this application should be directed to the Technology Center.

/AMW/
April M. Wise
Petitions Examiner
Office of Petitions

cc: KAONETICS TECHNOLOGY, INC.
C/O FIRST CAPITAL BUSINESS DEVELOPMENT, LLC
16293 EAST DORADO PLACE
CENTENNIAL, CO 80015

UNITED STATES PATENT AND TRADEMARK OFFICE

UNITED STATES DEPARTMENT OF COMMERCE
United States Patent and Trademark Office
Address: COMMISSIONER FOR PATENTS
P.O. Box 1450
Alexandria, Virginia 22313-1450
www.uspto.gov

APPLICATION NUMBER	FILING OR 371(C) DATE	FIRST NAMED APPLICANT	ATTY. DOCKET NO./TITLE
12/912,274	10/26/2010	James Cornwell	002561/0047

CONFIRMATION NO. 1750

POWER OF ATTORNEY NOTICE

26610
STROOCK & STROOCK & LAVAN LLP
180 MAIDEN LANE
NEW YORK, NY 10038

OC000000053164676

Date Mailed: 03/15/2012

NOTICE REGARDING CHANGE OF POWER OF ATTORNEY

This is in response to the Power of Attorney filed 02/29/2012.

- The withdrawal as attorney in this application has been accepted. Future correspondence will be mailed to the new address of record. 37 CFR 1.33.

/amwise/

Office of Data Management, Application Assistance Unit (571) 272-4000, or (571) 272-4200, or 1-888-786-0101

UNITED STATES PATENT AND TRADEMARK OFFICE

Commissioner for Patents
United States Patent and Trademark Office
P.O. Box 1450
Alexandria, VA 22313-1450
www.uspto.gov

BLANK ROME LLP
WATERGATE
600 NEW HAMPSHIRE AVENUE, N.W.
WASHINGTON, DC 20037

MAILED

AUG 01 2011

OFFICE OF PETITIONS

In re Application of Scott et al. Application No. 12/912,285 Filed: October 26, 2010 Attorney Docket No. 000687-0538	: : : : :	DECISION ON PETITION TO WITHDRAW FROM RECORD

This is a decision on the Request to Withdraw as attorney or agent of record under 37 C.F.R. § 1.36(b), filed July 14, 2011.

The request is **NOT APPROVED**.

The Office will only accept correspondence address changes to the most current address information provided for the assignee of the entire interest *who properly became of record under 37 CFR 3.71,* or, if no assignee of the entire interest has properly been made of record, the most current address information provided for the first named inventor. 37 CFR 3.71(c) states:

> *An assignee becomes of record either in a national patent application or a reexamination proceeding by filing a statement in compliance with § 3.73(b) that is signed by a party who is authorized to act on behalf of the assignee.*

A review of the file record does not indicate that a Statement Under 37 CFR 3.73(b) has been filed by the assignee in the instant application, therefore the request cannot be approved at this time.

There is an outstanding Office action mailed February 28, 2011, that requires a reply from the applicant.

All future communications from the Office will be directed to above-listed address until otherwise properly notified by the applicant or a proper change of correspondence address have been submitted

Telephone inquires concerning this decision should be directed to the undersigned at (571) 272-6059.

A. Kelley

Alicia Kelley-Collier
Petitions Examiner
Office of Petitions

PTO/SB/20PCT-JP (05-10)
Approved for use through 01/31/2012. OMB 0651-0058
U.S. Patent and Trademark Office; U. S. DEPARTMENT OF COMMERCE
Under the Paperwork Reduction Act of 1995, no persons are required to respond to a collection of information unless it displays a valid OMB control number.

REQUEST FOR PARTICIPATION IN THE PATENT COOPERATION TREATY - PATENT PROSECUTION HIGHWAY (PCT-PPH) PILOT PROGRAM BETWEEN THE JAPAN PATENT OFFICE (JPO) AND THE USPTO

Application No:	12/912,347	Filing date:	October 26, 2010
First Named Inventor:	Takashi OOSAKO		
Title of the Invention:	ORGANIC ELECTROLUMINESCENCE ELEMENT AND MANUFACTURING METHOD THEREOF		

THIS REQUEST FOR PARTICIPATION IN THE PCT-PPH PILOT PROGRAM ALONG WITH THE REQUIRED DOCUMENTS MUST BE SUBMITTED VIA EFS-WEB. INFORMATION REGARDING EFS-WEB IS AVAILABLE AT HTTP://WWW.USPTO.GOV/EBC/EFS_HELP.HTML

APPLICANT HEREBY REQUESTS PARTICIPATION IN THE PCT-PPH PROGRAM AND PETITIONS TO MAKE THE ABOVE-IDENTIFIED APPLICATION SPECIAL UNDER THE PCT-PPH PROGRAM.

The above-identified application is (1) a national stage entry of the corresponding PCT application, or (2) a national stage entry of another PCT application which claims priority to the corresponding PCT application, or (3) a national application that claims domestic/ foreign priority to the corresponding PCT application, or (4) a national application which forms the basis for the priority claim in the corresponding PCT application, or (5) a continuing application of a U.S. application that satisfies one of (1) to (4) above, or (6) a U.S. application that claims domestic benefit to a U.S. provisional application which forms the basis for the priority claim in the corresponding PCT application.

The corresponding PCT application number(s) is/are: PCT/JP2009/006026

The international date of the corresponding PCT application(s) is/are: November 11, 2009

I. List of Required Documents:

a. **A copy of the latest international work product (WO/ISA, WO/IPEA, or IPER) in the above–identified corresponding PCT application(s)**

☑ Is attached.

☐ Is not attached because the document is already in the U.S. application.

b. **A copy of all claims which were indicated as having novelty, inventive step and industrial applicability in the above-identified corresponding PCT application(s).**

☑ Is attached.

☐ Is not attached because the document is already in the U.S. application.

c. **English translations of the documents in a. and b. above are attached (if the documents are not in the English language). A statement that the English translation is accurate is attached for the document in b. above.**

This collection of information is required by 35 U.S.C. 119, 37 CFR 1.55, and 37 CFR 1.102(d). The information is required to obtain or retain a benefit by the public, which is to file (and by the USPTO to process) an application. Confidentiality is governed by 35 U.S.C. 122 and 37 CFR 1.11 and 1.14. This collection is estimated to take 2 hours to complete, including gathering, preparing, and submitting the completed application form to the USPTO. Time will vary depending upon the individual case. Any comments on the amount of time you require to complete this form and/or suggestions for reducing this burden should be sent to the Chief Information Officer, U.S. Patent and Trademark Office, U.S. Department of Commerce, P.O. Box 1450, Alexandria, VA 22313-1450. DO NOT SEND FEES OR COMPLETED FORMS TO THIS ADDRESS.

Approved for use through 01/31/2012. OMB 0651-0058
U.S.Patent and Trademark Office; U.S. DEPARTMENT OF COMMERCE

Under the Paperwork Reduction Act of 1995, no persons are required to respond to a collection of information unless it displays a valid OMB control number.

REQUEST FOR PARTICIPATION IN THE PCT-PPH PILOT PROGRAM BETWEEN THE JPO AND THE USPTO

(continued)

Application No.:	12/912,347
First Named Inventor:	Takashi OOSAKO

d. **(1) An information disclosure statement listing the documents cited in the international work products (ISR, WO/ISA, WO/IPEA, IPER) of the corresponding PCT application.**

☐ Is attached

☑ Has already been filed in the above-identified U.S. application on January 25, 2011

(2) Copies of all documents (except) for U.S. patents or U.S. patent application publications)

☐ Are attached.

☑ Have already been filed in the above-identified U.S. application on January 25, 2011

II. Claims Correspondence Table:

Claims in US Application	Patentable Claims in the corresponding PCT Application	Explanation regarding the correspondence
1	1	Independent claims 1 and 10 of the present application are each submitted
2	2	to "substantially correspond" to claims 1 and 8 of the corresponding PCT
3	2	Application, respectively. Dependent claims 2-9 and 11-13 are each
4	3	submitted to "substantially correspond" to dependent claims 2-7 and 9-11
5	3	of the corresponding PCT Application, respectively, and/or be dependent
6	4	claims narrower in scope than one of independent claims 1 and 8.
7	5	New claims 14 and 15 are dependent claims narrower in scope than one of
8	6	independent claim 1 and 8.
9	7	In addition, various claims in the U.S. application have been amended
10	8	to improve clarity, grammar and syntax, as well as to eliminate language
11	9	informalities.
12	10	A further explanation of the correspondence is set forth in the
13	11	Statement in Support of Request submitted concurrently with this Request.
14		
15		

III. All the claims in the US application sufficiently correspond to the patentable claims in the corresponding PCT application.

Signature	Date 12-12-11
Name (Print/Typed) Bruce H. Bernstein	Registration Number 29,027

Privacy Act Statement

The **Privacy Act of 1974 (P.L. 93-579)** requires that you be given certain information in connection with your submission of the attached form related to a patent application or patent. Accordingly, pursuant to the requirements of the Act, please be advised that: (1) the general authority for the collection of this information is 35 U.S.C. 2(b)(2); (2) furnishing of the information solicited is voluntary; and (3) the principal purpose for which the information is used by the U.S. Patent and Trademark Office is to process and/or examine your submission related to a patent application or patent. If you do not furnish the requested information, the U.S. Patent and Trademark Office may not be able to process and/or examine your submission, which may result in termination of proceedings or abandonment of the application or expiration of the patent.

The information provided by you in this form will be subject to the following routine uses:

1. The information on this form will be treated confidentially to the extent allowed under the Freedom of Information Act (5 U.S.C. 552) and the Privacy Act (5 U.S.C 552a). Records from this system of records may be disclosed to the Department of Justice to determine whether disclosure of these records is required by the Freedom of Information Act.
2. A record from this system of records may be disclosed, as a routine use, in the course of presenting evidence to a court, magistrate, or administrative tribunal, including disclosures to opposing counsel in the course of settlement negotiations.
3. A record in this system of records may be disclosed, as a routine use, to a Member of Congress submitting a request involving an individual, to whom the record pertains, when the individual has requested assistance from the Member with respect to the subject matter of the record.
4. A record in this system of records may be disclosed, as a routine use, to a contractor of the Agency having need for the information in order to perform a contract. Recipients of information shall be required to comply with the requirements of the Privacy Act of 1974, as amended, pursuant to 5 U.S.C. 552a(m).
5. A record related to an International Application filed under the Patent Cooperation Treaty in this system of records may be disclosed, as a routine use, to the International Bureau of the World Intellectual Property Organization, pursuant to the Patent Cooperation Treaty.
6. A record in this system of records may be disclosed, as a routine use, to another federal agency for purposes of National Security review (35 U.S.C. 181) and for review pursuant to the Atomic Energy Act (42 U.S.C. 218(c)).
7. A record from this system of records may be disclosed, as a routine use, to the Administrator, General Services, or his/her designee, during an inspection of records conducted by GSA as part of that agency's responsibility to recommend improvements in records management practices and programs, under authority of 44 U.S.C. 2904 and 2906. Such disclosure shall be made in accordance with the GSA regulations governing inspection of records for this purpose, and any other relevant (*i.e.*, GSA or Commerce) directive. Such disclosure shall not be used to make determinations about individuals.
8. A record from this system of records may be disclosed, as a routine use, to the public after either publication of the application pursuant to 35 U.S.C. 122(b) or issuance of a patent pursuant to 35 U.S.C. 151. Further, a record may be disclosed, subject to the limitations of 37 CFR 1.14, as a routine use, to the public if the record was filed in an application which became abandoned or in which the proceedings were terminated and which application is referenced by either a published application, an application open to public inspection or an issued patent.
9. A record from this system of records may be disclosed, as a routine use, to a Federal, State, or local law enforcement agency, if the USPTO becomes aware of a violation or potential violation of law or regulation.

IN THE UNITED STATES PATENT AND TRADEMARK OFFICE

Applicants	: Takashi OOSAKO	Group Art Unit: 2879
Serial No.	: 12/912,347	Examiner: Not Yet Assigned
Filed	: October 26, 2010	Confirmation No.: 1879
For	: ORGANIC ELECTROLUMINESCENCE ELEMENT AND MANUFACTURING METHOD THEREOF	

STATEMENT IN SUPPORT OF REQUEST FOR PARTICIPATION IN THE PATENT COOPERATION TREATY - PATENT PROSECUTION HIGHWAY (PCT-PPH) PROGRAM BETWEEN THE JAPAN PATENT OFFICE AND THE USPTO

Commissioner for Patents
U.S. Patent and Trademark Office
Customer Service Window, Mail Stop PPH
Randolph Building
401 Dulany Street
Alexandria VA 22314

Sir:

In support of the concurrently filed Request for Participation in the Patent Cooperation Treaty - Patent Prosecution Highway (PCT-PPH) Program between the Japan Patent Office (JPO) and the USPTO, Applicant brings the following information to the attention of the U.S. Patent and Trademark Office:

1. The present US application is a national application of International Application No. PCT/JP2009/006026, which contains the claims indicated as having novelty, inventive step, and industrial applicability. In other words, the present application is a continuation of PCT/JP2009/006026.

2. A copy of the latest international work product (Written Opinion), and a partial English language translation thereof, containing the indication that claims 1-11 have novelty, inventive step and industrial applicability, are submitted concurrently with this Request.

3. The Written Opinion of the International Searching Authority does not include any observation described in Box VIII, and thus, Applicant does not identify and explain why the claim(s) is/are not subject to an observation described in Box VIII.

4. A copy of the claims in PCT/JP2009/006026 indicated as having novelty, inventive step, and industrial applicability, and a verified English language translation thereof, are submitted concurrently with this Request.

5. Copies of the documents cited in the latest international work product were submitted in an Information Disclosure Statement filed on January 2, 2011.

6. Claims 1-13 of the present application are submitted to "sufficiently correspond" to claims 1-11 of PCT/JP2009/006026, respectively. Applicant notes that the claims have been amended to improve clarity, grammar, and syntax, to utilize proper claim format, and to eliminate language formalities.

In this regard, such amendments are submitted to place the present application in better condition for examination and allowance.

In addition, dependent claims 2 and 3 of the International application have been divided into claims 2 and 4 and 4 and 5, respectively, of the instant application o enhance clarity. Newly submitted claims 14 and 15 are dependent claims narrower in scope than the claims indicated as having novelty, inventive step and industrial applicability and depend from one of the claims indicated as having novelty, inventive step and industrial applicability.

If there should be any questions concerning this application, the Examiner is invited to contact the undersigned at the telephone number listed below.

Respectfully submitted,
Takashi OOSAKO
/William Pieprz/
Reg. No. 33,630
William Pieprz

Bruce H. Bernstein
Reg. No. 29027

December 12, 2011
GREENBLUM & BERNSTEIN, P.L.C.
1950 Roland Clarke Place
Reston, VA 20191
(703) 716-1191

WRITTEN OPINION OF THE INTERNATIONAL SEARCHING AUTHORITY

International application No.
PCT/JP2009/006026

Box No. V Reasoned statement under Rule 43*bis*. 2.1(a)(i) with regard to novelty, inventive step and industrial applicability; citations and explanations supporting such statement

1. Statement

Novelty (N)	Claims	1 - 11	Yes
	Claims		No
Inventive step (IS)	Claims	1 – 11	Yes
	Claims		No
Industrial applicability (IA)	Claims	1 – 11	Yes
	Claims		No

2. Citations and explanations

The invention as claimed in Claims 1 to 11 is not disclosed in any of the documents cited in the International Search Report, and therefore has novelty. In particular, the invention-defining matter of "An organic electroluminescence (EL) element comprising: pixel electrodes; a bank which is placed between adjacent ones of said pixel electrodes and includes apertures each of which corresponds to one of said pixel electrodes; an organic luminescent layer which is placed within each of said apertures; and an upper electrode which is placed above said bank and said organic luminescent layer, wherein a shape of a part of a contour of each of said apertures is a shape that includes curves and cusps, said curves bulging inwards of said aperture, and said cusps each being a connection point of adjacent ones of said curves" is not disclosed in any of the cited documents.

特許協力条約

発信人　日本国特許庁（国際調査機関）

代理人
新居広守
様

あて名
〒532-0011
日本国大阪府大阪市淀川区西中島５丁目３番１０号タナカ・イトーピア新大阪ビル６階新居国際特許事務所内

09.12.16

ＰＣＴ

国際調査報告及び国際調査機関の見解書
又は国際調査報告を作成しない旨の決定
の送付の通知書
（法施行規則第41条）
〔ＰＣＴ規則44.1〕

発送日（日.月.年）	１５．１２．２００９
出願人又は代理人の書類記号　P054361P0	今後の手続きについては、下記１及び４を参照。
国際出願番号　ＰＣＴ／ＪＰ２００９／００６０２６	国際出願日（日.月.年）　１１．１１．２００９
出願人（氏名又は名称）パナソニック株式会社	

1．☑ 国際調査報告及び国際調査機関の見解書が作成されたこと、及びこの送付書とともに送付することを、出願人に通知する。
ＰＣＴ19条の規定に基づく補正書及び説明書の提出
出願人は、国際出願の請求の範囲を補正することができる（ＰＣＴ規則46参照）。
いつ　補正書の提出期間は、通常国際調査報告の送付の日から２月である。
どこへ　直接次の場所へ　The International Bureau of WIPO
34, chemin des Colombettes
1211 Geneva 20, Switzerland
Facsimile No.: +41 22 338 82 70
詳細な手続については、添付用紙の備考を参照すること。

2．☐ 国際調査報告が作成されないこと、及び法第8条第2項（ＰＣＴ17条(2)(a)）の規定による国際調査報告を作成しない旨の決定及び国際調査機関の見解書をこの送付書とともに送付することを、出願人に通知する。

3．☐ 法施行規則第44条（ＰＣＴ規則40.2）に規定する追加手数料の納付に対する異議の申立てに関して、出願人に下記の点を通知する。
☐ 異議の申立てと当該異議についての決定を、その異議の申し立てと当該異議についての決定の両方を指定官庁へ送付することを求める出願人の請求とともに、国際事務局へ送付した。
☐ 当該異議についての決定は、まだ行われていない。決定されしだい出願人に通知する。

4．今後の手続：　出願人は次の点に注意すること。
優先日から１８月経過後、国際出願は国際事務局によりすみやかに国際公開される。出願人が公開の延期を望むときは、国際出願又は優先権の主張の取下げの通知がＰＣＴ規則90の2.1及び90の2.3にそれぞれ規定されているように、国際公開の事務的な準備が完了する前に国際事務局に到達しなければならない。
いくつかの指定官庁については、出願人が国内段階の開始を優先日から３０月まで（官庁によってはさらに遅くまで）延期することを望むときは、優先日から１９月以内に、国際予備審査の請求書が提出されなければならない。そうでなければ、出願人はそれらの指定官庁に対して優先日から２０月以内に、国内段階の開始のための所定の手続を取らなければならない。
その他の指定官庁については、１９月以内に国際予備審査の請求書が提出されない場合にも、３０月の（あるいはさらに遅い）期限が適用される。
様式PCT/IB/301の付属書類を参照。個々の指定官庁で適用される期限の詳細については、ＰＣＴ出願人の手引、第Ⅱ巻、国内段階およびＷＩＰＯインターネットサイトを参照。

名称及びあて名 日本国特許庁（ＩＳＡ／ＪＰ） 郵便番号１００－８９１５ 東京都千代田区霞が関三丁目４番３号	権限のある職員　２０　４４０７ 特　許　庁　長　官 電話番号　０３－３５８１－１１０１　内線　３２７１

注　　意

1．国際調査報告の発送日から起算する条約第19条（1）及び規則46.1に従う国際事務局への補正期間に注意してください。

2．条約22条（2）に規定する期間に注意してください。

3．法律又は契約等の制限により、国際調査報告に記載した非特許文献の写しの一部又は全てが送付されない場合があります。

4．文献の写しの請求について

国際調査報告に記載した文献の複写

特許庁にこれらの引用文献の写しを請求することもできますが、独立行政法人工業所有権情報・研修館（特許庁庁舎２階）で公報類の閲覧・複写および公報以外の文献複写等の取り扱いをしています。

〔担当及び照会先〕

〒１００－００１３　東京都千代田区霞が関３丁目４番３号（特許庁庁舎２階）
独立行政法人工業所有権情報・研修館
【公 報 類】　閲覧部　ＴＥＬ　03－3581－1101　内線3811～2
【公報以外】　資料部　ＴＥＬ　03－3581－1101　内線3831～3

また、（財）日本特許情報機構でも取り扱いをしています。
これらの引用文献の複写を請求する場合は下記の点に注意してください。

〔申込方法〕

（１）特許（実用新案・意匠）公報については、下記の点を明記してください。
○特許・実用新案及び意匠の種類
○出願公告又は出願公開の年次及び番号（又は特許番号、登録番号）
○必要部数

（２）公報以外の文献の場合は、下記の点に注意してください。
○国際調査報告の写しを添付してください（返却します）。

〔申込み及び照会先〕

〒１３５－００１６　東京都江東区東陽４－１－７　佐藤ダイヤビルディング
財団法人　日本特許情報機構　情報業務部業務課
ＴＥＬ　０３－３５０８－２３１３

注意　特許庁に対して文献の写しの請求をすることができる期間は、国際出願日から７年です。

様式ＰＣＴ／ＩＳＡ／２２０の備考

この備考は、ＰＣＴ19条の規定に基づく補正書の提出に関する基本的な指示を与えるためのものである。この備考は特許協力条約並びにこの条約に基づく規則及び実施細則の規定に基づいている。この備考とそれらの規定とが相違する場合には、後者が適用される。詳細な情報については、ＷＩＰＯの出版物であるＰＣＴ出願人の手引も参照すること。

ＰＣＴ19条の規定に基づく補正書の提出に関する指示

出願人は、国際調査報告及び国際調査機関の見解書を受領した後、国際出願の請求の範囲を補正する機会が一回ある。しかし、国際出願のすべての部分（請求の範囲、明細書及び図面）が、国際予備審査の手続においても補正できるもので、例えば出願人が仮保護のために補正書を公開することを希望する場合又は国際公開前に請求の範囲を補正する別の理由がある場合を除き、通常ＰＣＴ19条の規定に基づく補正書を提出する必要はないことを強調しておく。さらに、仮保護は一部の国のみで与えられるだけであることも強調しておく（ＰＣＴ出願人の手引、附録Ｂ１及びＢ２参照）。

補正の対象となるもの

ＰＣＴ19条の規定により請求の範囲のみ補正することができる。
国際段階においてＰＣＴ34条の規定に基づく国際予備審査の手続きにおいて請求の範囲を（更に）補正することができる。
明細書及び図面は、ＰＣＴ34条の規定に基づく国際予備審査の手続においてのみ補正することができる。
国内段階に移行する際、ＰＣＴ28条（又はＰＣＴ41条）の規定により、国際出願のすべての部分を補正することができる。

いつ

国際調査報告の送付の日から２月又は優先日から１６月の内どちらか遅く満了するほうの期間内。しかし、その期間の満了後であっても国際公開の技術的な準備の完了前に国際事務局が補正を受領した場合には、その補正書は、期間内に受理されたものとみなすことを強調しておく（ＰＣＴ規則46.1）。

補正書を提出すべきところ

補正書は、国際事務局のみに提出でき、受理官庁又は国際調査機関には提出してはいけない（ＰＣＴ規則46.2）。
国際予備審査の請求書を提出した／する場合については、以下を参照すること。

どのように

１以上の請求の範囲の削除、１以上の新たな請求の範囲の追加、又は１以上の請求の範囲の記載の補正による。
差替え用紙は、補正の結果、出願当初の用紙と相違する請求の範囲の各用紙毎に提出する。
差替え用紙に記載されているすべての請求の範囲には、アラビア数字を付さなければならない。請求の範囲を削除する場合、その他の請求の範囲の番号を付け直す必要はない。請求の範囲の番号を付け直す場合には、連続番号で付け直さなければならない（ＰＣＴ実施細則第205号(b)）。
補正は国際公開の言語で行う。

補正書にどのような書類を添付しなければならないか

書簡（ＰＣＴ実施細則第205号(b)）

補正書には書簡を添付しなければならない。
書簡は国際出願及び補正された請求の範囲とともに公開されることはない。これを「ＰＣＴ19条(1)に規定する説明書」と混同してはならない（「ＰＣＴ19条(1)に規定する説明書」については、以下を参照）。
書簡は、英語又は仏語を選択しなければならない。ただし、国際出願の言語が英語の場合、書簡は英語で、仏語の場合、書簡は仏語で記載しなければならない。
書簡には、出願時の請求の範囲と補正された請求の範囲との相違について表示しなければならない。特に、国際出願に記載した各請求の範囲との関連で次の表示（２以上の請求の範囲についての同一の表示する場合は、まとめることができる。）をしなければならない。

(i) この請求の範囲は変更しない。
(ii) この請求の範囲は削除する。
(iii) この請求の範囲は追加である。
(iv) この請求の範囲は出願時の１以上の請求の範囲と差し替える。
(v) この請求の範囲は出願時の請求の範囲の分割の結果である。

次に、添付する書簡中での、補正についての説明の例を示す。

１．［請求の範囲の一部の補正によって請求の範囲の項数が４８から５１になった場合］：
“請求の範囲１－２９、３１、３２、３４、３５、３７－４８項は、同じ番号のもとに補正された請求の範囲と置き換えられた。請求の範囲３０、３３及び３６項は変更なし。新たに請求の範囲４９－５１項が追加された。”

２．［請求の範囲の全部の補正によって請求の範囲の項数が１５から１１になった場合］：
“請求の範囲１－１５項は、補正された請求の範囲１－１１項に置き換えられた。”

３．［原請求の範囲の項数が１４で、補正が一部の請求の範囲の削除と新たな請求の範囲の追加を含む場合］：
“請求の範囲１－６及び１４項は変更なし。請求の範囲７－１３は削除。新たに請求の範囲１５、１６及び１７項を追加。”又は
“請求の範囲７－１３は削除。新たに請求の範囲１５、１６及び１７項を追加。その他の全ての請求の範囲は変更なし。”

４．［各種の補正がある場合］：
“請求の範囲１－１０項は変更なし。請求の範囲１１－１３、１８及び１９項は削除。請求の範囲１４、１５及び１６項は補正された請求の範囲１４項に置き換えられた。請求の範囲１７項は補正された請求の範囲１５、１６及び１７項に分割された。新たに請求の範囲２０及び２１項が追加された。”

“ＰＣＴ19条(1)の規定に基づく説明書”（ＰＣＴ規則46.4）

補正書には、補正並びにその補正が明細書及び図面に与える影響についての説明書を提出することができる（明細書及び図面はＰＣＴ19条(1)の規定に基づいては補正できない）。

説明書は、国際出願及び補正された請求の範囲とともに公開される。

説明書は、国際公開の言語で作成しなければならない。

説明書は、簡潔でなければならず、英語の場合又は英語に翻訳した場合に５００語を越えてはならない。

説明書は、出願時の請求の範囲と補正された請求の範囲との相違を示す書簡と混同してはならない。説明書を、その書簡に代えることはできない。説明書は別紙で提出しなければならず、見出しを付すものとし、その見出しは“ＰＣＴ19条(1)の規定に基づく説明書”の語句を用いることが望ましい。

説明書には、国際調査報告又は国際調査報告に列記された文献との関連性に関して、これらを誹謗する意見を記載してはならない。国際調査報告に列記された特定の請求の範囲に関連する文献についての言及は、当該請求の範囲の補正に関してのみ行うことができる。

国際予備審査の請求書が提出されている場合

ＰＣＴ19条の規定に基づく補正書及び添付する説明書の提出の時に国際予備審査の請求書が既に提出されている場合には、出願人は、補正書（及び説明書）を国際事務局に提出すると同時にその写し及び必要な場合、その翻訳文を国際予備審査機関にも提出することが望ましい（ＰＣＴ規則55.3(a)、62.2の第１文を参照）。詳細は国際予備審査請求書（ＰＣＴ／ＩＰＥＡ／４０１）の注意書参照。

国際予備審査の請求がされた場合は、見解書を作成した国際調査機関が国際予備審査機関としては行動しないという特定の場合を除いて、国際調査機関の見解書は国際予備審査機関の見解書とみなされる。この場合、様式ＰＣＴ／ＩＳＡ／２２０の送付日から３月又は優先日から２２月のうちいずれか遅く満了する期限が経過するまでに、出願人は国際予備審査機関に、適当な場合は補正書とともに、答弁書を提出することができる（ＰＣＴ規則43の2.1(c)）。

国内段階に移行するための国際出願の翻訳に関して

国内段階に移行する際、ＰＣＴ19条の規定に基づいて補正された請求の範囲の翻訳を出願時の請求の範囲の翻訳の代わりに又は追加して、指定官庁／選択官庁に提出しなければならないこともあるので、出願人は注意されたい。

指定官庁／選択官庁の詳細な要求については、ＰＣＴ出願人の手引きの第Ⅱ巻を参照。

特 許 協 力 条 約

PCT

09.12.16

国際調査報告

（法８条、法施行規則第40、41条）
〔ＰＣＴ18条、ＰＣＴ規則43、44〕

出願人又は代理人の書類記号 P054361P0	今後の手続きについては、様式ＰＣＴ／ＩＳＡ／２２０及び下記５を参照すること。	
国際出願番号 ＰＣＴ／ＪＰ２００９／００６０２６	国際出願日 (日.月.年) １１．１１．２００９	優先日 (日.月.年)
出願人（氏名又は名称） パナソニック株式会社		

国際調査機関が作成したこの国際調査報告を法施行規則第41条（ＰＣＴ18条）の規定に従い出願人に送付する。
この写しは国際事務局にも送付される。

この国際調査報告は、全部で ３ ページである。

☐ この調査報告に引用された先行技術文献の写しも添付されている。

１．国際調査報告の基礎
ａ．言語に関し、この国際調査は以下のものに基づき行った。
☑ 出願時の言語による国際出願
☐ 出願時の言語から国際調査のための言語である ＿＿＿＿＿＿ 語に翻訳された、この国際出願の翻訳文（ＰＣＴ規則12.3(a)及び23.1(b)）

ｂ．☐ この国際調査報告は、ＰＣＴ規則91の規定により国際調査機関が認めた又は国際調査機関に通知された明らかな誤りの訂正を考慮して作成した（ＰＣＴ規則43.6の2(a)）。

ｃ．☐ この国際出願は、ヌクレオチド又はアミノ酸配列を含んでいる（第Ｉ欄参照）。

２．☐ 請求の範囲の一部の調査ができない（第Ⅱ欄参照）。

３．☐ 発明の単一性が欠如している（第Ⅲ欄参照）。

４．発明の名称は ☑ 出願人が提出したものを承認する。
☐ 次に示すように国際調査機関が作成した。

＿＿＿＿＿＿＿＿＿＿＿＿＿＿＿＿

５．要約は ☑ 出願人が提出したものを承認する。
☐ 第Ⅳ欄に示されているように、法施行規則第47条第１項（ＰＣＴ規則38.2）の規定により国際調査機関が作成した。出願人は、この国際調査報告の発送の日から１月以内にこの国際調査機関に意見を提出することができる。

６．図面に関して
ａ．要約書とともに公表される図は、
第 １ 図とする。 ☑ 出願人が示したとおりである。
☐ 出願人は図を示さなかったので、国際調査機関が選択した。
☐ 本図は発明の特徴を一層よく表しているので、国際調査機関が選択した。

ｂ．☐ 要約とともに公表される図はない。

国際調査報告

国際出願番号　ＰＣＴ／ＪＰ２００９／００６０２６

Ａ．　発明の属する分野の分類（国際特許分類（ＩＰＣ））

Int.Cl.　H05B33/22(2006.01)i, H01L51/50(2006.01)i, H05B33/10(2006.01)i, H05B33/12(2006.01)i

Ｂ．　調査を行った分野

調査を行った最小限資料（国際特許分類（ＩＰＣ））

Int.Cl.　H05B33/22, H01L51/50, H05B33/10, H05B33/12

最小限資料以外の資料で調査を行った分野に含まれるもの

日本国実用新案公報	１９２２－１９９６年
日本国公開実用新案公報	１９７１－２００９年
日本国実用新案登録公報	１９９６－２００９年
日本国登録実用新案公報	１９９４－２００９年

国際調査で使用した電子データベース（データベースの名称、調査に使用した用語）

Ｃ．　関連すると認められる文献

引用文献のカテゴリー＊	引用文献名　及び一部の箇所が関連するときは、その関連する箇所の表示	関連する請求項の番号
A	JP 2006-75746 A (セイコーエプソン株式会社) 2006.03.23, 【0095】-【0100】, 【図5】 (ファミリーなし)	1-11
A	JP 2008-226747 A (ソニー株式会社) 2008.09.25, 【0065】-【0070】, 【図6】, 【図7】 & US 2008/0224963 A1 & CN 101267700 A	1-11
A	JP 11-326625 A (セイコーエプソン株式会社) 1999.11.26, 【0033】, 【0034】, 【図8】 (ファミリーなし)	1-11

☑　Ｃ欄の続きにも文献が列挙されている。

☐　パテントファミリーに関する別紙を参照。

＊　引用文献のカテゴリー

「Ａ」特に関連のある文献ではなく、一般的技術水準を示すもの

「Ｅ」国際出願日前の出願または特許であるが、国際出願日以後に公表されたもの

「Ｌ」優先権主張に疑義を提起する文献又は他の文献の発行日若しくは他の特別な理由を確立するために引用する文献（理由を付す）

「Ｏ」口頭による開示、使用、展示等に言及する文献

「Ｐ」国際出願日前で、かつ優先権の主張の基礎となる出願の日の後に公表された文献

「Ｔ」国際出願日又は優先日後に公表された文献であって出願と矛盾するものではなく、発明の原理又は理論の理解のために引用するもの

「Ｘ」特に関連のある文献であって、当該文献のみで発明の新規性又は進歩性がないと考えられるもの

「Ｙ」特に関連のある文献であって、当該文献と他の１以上の文献との、当業者にとって自明である組合せによって進歩性がないと考えられるもの

「&」同一パテントファミリー文献

国際調査を完了した日	国際調査報告の発送日
０７．１２．２００９	１５．１２．２００９

国際調査機関の名称及びあて先
日本国特許庁（ＩＳＡ／ＪＰ）
郵便番号１００－８９１５
東京都千代田区霞が関三丁目４番３号

特許庁審査官（権限のある職員）　２Ｏ　４４０７
本田　博幸

電話番号　０３－３５８１－１１０１　内線　３２７１

Ｃ（続き）．　関連すると認められる文献

引用文献のカテゴリー＊	引用文献名　及び一部の箇所が関連するときは、その関連する箇所の表示	関連する請求項の番号
A	JP 2009-245816 A (パナソニック株式会社) 2009.10.22, 【0029】, 【0054】 (ファミリーなし)	6,10,11
A	JP 2005-268062 A (株式会社日立ディスプレイズ) 2005.09.29, 【0078】, 【図4】 & US 2005/0212413 A1	7

特 許 協 力 条 約

発信人　日本国特許庁（国際調査機関）

代理人
新居広守
様

あて名
〒532-0011
日本国大阪府大阪市淀川区西中島５丁目３番１０号
タナカ・イトーピア新大阪ビル６階新居国際特許事務所内

09.12.16

ＰＣＴ
国際調査機関の見解書
（法施行規則第40条の2）
〔ＰＣＴ規則43の2.1〕

発送日 (日.月.年)　　１５．１２．２００９	
出願人又は代理人 の書類記号　P054361P0	今後の手続きについては、下記２を参照すること。

国際出願番号	国際出願日	優先日
ＰＣＴ／ＪＰ２００９／００６０２６	(日.月.年)　１１．１１．２００９	(日.月.年)

国際特許分類（ＩＰＣ）Int.Cl. H05B33/22(2006.01)i, H01L51/50(2006.01)i, H05B33/10(2006.01)i, H05B33/12(2006.01)i

出願人（氏名又は名称）
パナソニック株式会社

１．この見解書は次の内容を含む。

- ☑ 第Ⅰ欄　見解の基礎
- ☐ 第Ⅱ欄　優先権
- ☐ 第Ⅲ欄　新規性、進歩性又は産業上の利用可能性についての見解の不作成
- ☐ 第Ⅳ欄　発明の単一性の欠如
- ☑ 第Ⅴ欄　ＰＣＴ規則43の2.1(a)(i)に規定する新規性、進歩性又は産業上の利用可能性についての見解、それを裏付けるための文献及び説明
- ☐ 第Ⅵ欄　ある種の引用文献
- ☐ 第Ⅶ欄　国際出願の不備
- ☐ 第Ⅷ欄　国際出願に対する意見

２．今後の手続き
国際予備審査の請求がされた場合は、出願人がこの国際調査機関とは異なる国際予備審査機関を選択し、かつ、その国際予備審査機関がＰＣＴ規則66.1の2(b)の規定に基づいて国際調査機関の見解書を国際予備審査機関の見解書とみなさない旨を国際事務局に通知していた場合を除いて、この見解書は国際予備審査機関の最初の見解書とみなされる。

この見解書が上記のように国際予備審査機関の見解書とみなされる場合、様式ＰＣＴ／ＩＳＡ／２２０を送付した日から３月又は優先日から２２月のうちいずれか遅く満了する期限が経過するまでに、出願人は国際予備審査機関に、適当な場合は補正書とともに、答弁書を提出することができる。

さらなる選択肢は、様式ＰＣＴ／ＩＳＡ／２２０を参照すること。

３．さらなる詳細は、様式ＰＣＴ／ＩＳＡ／２２０の備考を参照すること。

見解書を作成した日
０７．１２．２００９

名称及びあて先	特許庁審査官（権限のある職員）	２０	４４０７
日本国特許庁（ＩＳＡ／ＪＰ） 郵便番号１００－８９１５ 東京都千代田区霞が関三丁目４番３号	本田　博幸 電話番号　０３－３５８１－１１０１　内線　３２７１		

国際調査機関の見解書

国際出願番号　ＰＣＴ／ＪＰ２００９／００６０２６

第Ｉ欄　見解の基礎

１．言語に関し、この見解書は以下のものに基づき作成した。

☑ 出願時の言語による国際出願

☐ 出願時の言語から国際調査のための言語である ＿＿＿＿＿＿ 語に翻訳された、この国際出願の翻訳文（ＰＣＴ規則12.3(a)及び23.1(b)）

２．☐ この見解書は、ＰＣＴ規則 91 の規定により国際調査機関が認めた又は国際調査機関に通知された明らかな誤りの訂正を考慮して作成した（ＰＣＴ規則 43 の 2.1(b)）。

３．この国際出願で開示されたヌクレオチド又はアミノ酸配列に関して、以下に基づき見解書を作成した。

ａ．タイプ　☐ 配列表

☐ 配列表に関連するテーブル

ｂ．フォーマット　☐ 紙形式

☐ 電子形式

ｃ．提出時期　☐ 出願時の国際出願に含まれていたもの

☐ この国際出願と共に電子形式により提出されたもの

☐ 出願後に、調査のために、この国際調査機関に提出されたもの

４．☐ さらに、配列表又は配列表に関連するテーブルを提出した場合に、出願後に提出した配列若しくは追加して提出した配列が出願時に提出した配列と同一である旨、又は、出願時の開示を超える事項を含まない旨の陳述書の提出があった。

５．補足意見：

国際調査機関の見解書

国際出願番号　ＰＣＴ／ＪＰ２００９／００６０２６

第Ｖ欄　新規性、進歩性又は産業上の利用可能性についてのＰＣＴ規則 43 の 2.1(a)(i)に定める見解、それを裏付ける文献及び説明

1．　見解

新規性（N）	請求項	1-11	有
	請求項		無
進歩性（ＩＳ）	請求項	1-11	有
	請求項		無
産業上の利用可能性（ＩＡ）	請求項	1-11	有
	請求項		無

2．　文献及び説明

請求項 1-11 に係る発明は、国際調査報告が引用するいずれの文献にも開示されておらず、新規性を有する。特に、請求項 1-11 に係る発明の特定事項である、「複数の画素電極と、該複数の画素電極間に配置され、各画素電極に対応した開口部を有するバンクと、該開口部に配置された有機発光層と、前記バンク及び前記有機発光層の上方に配置された上部電極とを具備し、前記開口部の輪郭線の一部の形状が、開口部の内方へ膨らんだ複数の曲線と、隣接する前記曲線の接続点である尖点とを含む形状である、有機ＥＬ素子」については、いずれの文献にも記載されていない。

IN THE UNITED STATES PATENT AND TRADEMARK OFFICE

In re Application of

Serial NO.:12/912,347
Filing Date: October 26, 2010
For: ORGANIC ELECTROLUMINESCENCE ELEMENT AND MANUFACTURING METHOD THEREOF

VERIFICATION OF TRANSLATION

Honorable Commissioner of Patents and Trademarks
Washington, D.C. 20231

Sir:

Kazumi KAWATA, c/o NII Patent Firm, 6F, Tanaka Ito Pia Shin-Osaka Bldg., 3-10, Nishi Nakajima 5-chome, Yodogawa-ku, Osaka-city, Osaka 532-0011, Japan declares:

(1) that he knows well both the Japanese and English languages;
(2) that he translated the claims from PCT/JP2009/006026 from Japanese to English;
(3) that the attached English translation is a true and correct translation of the claims from PCT/JP2009/006026 to the best of his knowledge and belief; and
(4) that all statements made of his own knowledge are true and that all statements made on information and belief are believed to be true, and further that these statements are made with the knowledge that willful false statements and the like are punishable by fine or imprisonment, or both, under 18 U.S.C. 1001, and that such false statements may jeopardize the validity of the application or any patent thereon.

This 17th day of November, 2011

Kazumi KAWATA

[CLAIMS]

[Claim 1]

An organic electroluminescence (EL) element comprising:

pixel electrodes;

a bank which is placed between adjacent ones of said pixel electrodes and includes apertures each of which corresponds to one of said pixel electrodes;

an organic luminescent layer which is placed within each of said apertures; and

an upper electrode which is placed above said bank and said organic luminescent layer,

wherein a shape of a part of a contour of each of said apertures is a shape that includes curves and cusps, said curves bulging inwards of said aperture, and said cusps each being a connection point of adjacent ones of said curves.

[Claim 2]

The organic EL element according to Claim 1,

wherein an overall shape of the contour is one of (i) a rough oval shape which includes two opposing straight-line parts and two rough-curve parts each connecting corresponding ends of said straight-line parts, and (ii) a rough-rectangular shape which includes a total of four straight-line parts in two opposing pairs, and four rough-curve parts connecting adjacent ends of said straight-line parts, and

the shape of the part of the contour is a shape of the rough-curve parts.

[Claim 3]

The organic EL element according to Claim 1,

wherein each of said curves is a circular arc or an elliptic arc.

[Claim 4]

The organic EL element according to Claim 1,

wherein the number of said cusps ranges from 6 to 1000.

[Claim 5]

The organic EL element according to Claim 1,

wherein a connection angle, which is an angle formed between respective tangents to two of said curves at each of said cusps, is 90 degrees or greater.

[Claim 6]

The organic EL element according to Claim 1,

wherein said organic luminescent layer is formed through hardening of ink.

[Claim 7]

The organic EL element according to Claim 1, further comprising:

a sealing layer provided with projections,

wherein each of said projections abuts against a part corresponding to an apex-part of said bank.

[Claim 8]

A method of manufacturing an organic EL element, said method comprising:

forming pixel electrodes;

forming, between adjacent ones of the pixel electrodes, a bank which includes apertures each of which corresponds to one of the pixel electrodes;

forming an organic luminescent layer within each of the apertures; and

forming an upper electrode above the bank and the organic luminescent layer,

wherein, in said forming of a bank, the bank is formed such that a shape of a part of a contour of each of the apertures is a shape that includes curves and cusps, the curves bulging inwards of the aperture, and said cusps each being a connection point of adjacent ones of the curves.

[Claim 9]

The method of manufacturing an organic EL element according to Claim 8,

wherein photolithography using a negative-type photosensitive material is employed in said forming of a bank.

[Claim 10]

The method of manufacturing an organic EL element according to Claim 8,

wherein, in said forming of an organic luminescent layer, the organic luminescent layer is formed through hardening of ink.

[Claim 11]

The method of manufacturing an organic EL element according to Claim 10,

wherein viscosity of the ink ranges from 20 to 30 cps.

請求の範囲

[請求項1]　複数の画素電極と、

該複数の画素電極間に配置され、各画素電極に対応した開口部を有するバンクと、

該開口部内に配置された有機発光層と、

前記バンク及び前記有機発光層の上方に配置された上部電極と

を具備し、

前記開口部の輪郭線の一部の形状が、開口部の内方へ膨らんだ複数の曲線と、隣接する前記曲線の接続点である尖点とを含む形状である、

有機ＥＬ素子。

[請求項2]　前記輪郭線の全体形状が、対向する２つの直線部と、該直線部の端部同士を連結する２つの略湾曲部とを含む略長円形状、若しくは対向する２組、計４つの直線部と、該直線部の端部同士を連結する４つの略湾曲部とを含む略矩形状であって、

前記輪郭線の一部の形状が、前記略湾曲部の形状である、

請求項１に記載の有機ＥＬ素子。

[請求項3]　前記複数の曲線の各々が、円弧または楕円弧である、

請求項１に記載の有機ＥＬ素子。

[請求項4]　前記尖点の数が、６～１０００である、

請求項１に記載の有機ＥＬ素子。

[請求項5]　前記尖点において２つの曲線の接線がなす角度である接続角が、９０度以上である、

請求項１に記載の有機ＥＬ素子。

[請求項6]　前記有機発光層が、インクを硬化させて形成されたものである、

請求項１に記載の有機ＥＬ素子。

[請求項7]　前記有機ＥＬ素子は、さらに、

突起部が設けられた封止層を具備し、

該突起部が、前記バンクの頂部に対応する部分に当接している、

請求項１に記載の有機ＥＬ素子。

[請求項8]　複数の画素電極を形成する工程と、

該複数の画素電極間に、各画素電極に対応した開口部を有するバンクを形成する工程と、

該開口部内に有機発光層を形成する工程と、

前記バンク及び前記有機発光層の上方に上部電極を形成する工程とを含み、

前記バンクを形成する工程において、前記開口部の輪郭線の一部の形状が、開口部の内方へ膨らんだ複数の曲線と、隣接する前記曲線の接続点である尖点とを含む形状となるように形成する、

有機ＥＬ素子の製造方法。

[請求項9]　前記バンクを形成する工程において、ネガ型感光材料を用いたフォトリソグラフィー法を使用する、

請求項８に記載の有機ＥＬ素子の製造方法。

[請求項10]　前記有機発光層を形成する工程において、インクを硬化させて発光層を形成する、

請求項８に記載の有機ＥＬ素子の製造方法。

[請求項11]　前記インクの粘度が、２０～３０ｃｐｓである、

請求項１０に記載の有機ＥＬ素子の製造方法。

UNITED STATES PATENT AND TRADEMARK OFFICE

Commissioner for Patents
United States Patent and Trademark Office
P.O. Box 1450
Alexandria, VA 22313-1450
www.uspto.gov

GREENBLUM & BERNSTEIN, P.L.C.
1950 ROLAND CLARKE PLACE
RESTON, VA 20191

MAILED
FEB 09 2012
OFFICE OF PETITIONS

In re Application of
Takashi Oosako
Application No.: 12/912,347
Filed: October 26, 2010
Attorney Docket No.: P38266
For: ORGANIC ELECTROLUMINESCENCE ELEMENT AND MANUFACTURING METHOD THEREOF

: DECISION ON REQUEST TO PARTICIPATE IN THE PATENT PROSECUTION HIGHWAY PROGRAM AND PETITION TO MAKE SPECIAL UNDER 37 CFR 1.102(a)

This is a decision on the request to participate in the PCT Patent Prosecution Highway (PCT-PPH) pilot program and the petition under 37 CFR 1.102(a), filed on December 13, 2011, to make the above-identified application special.

The request and petition are **DISMISSED**.

Discussion

A grantable request to participate in the PCT-PPH pilot program and petition to make special require:

(1) The U.S. application must have an eligible relationship to one or more PCT applications where the ISA or IPEA are the Australia, Austria, EPO, Finland, JPO, KIPO, NPI, NBPR, Spain, Sweden, USPTO, or CHINA;

(2) At least one claim in the PCT application has novelty, inventive step, and industrial applicability and must be free of any observations in Box VIII in the latest work product in the international stage or applicant must identify and explain why the claim(s) is/are not subject to the observation in Box VIII;

(3) Applicant must submit a copy of the claim(s) from the PCT application(s) that have novelty, inventive step, and industrial applicability along with an English translation thereof and a statement that the English translation is accurate, if the claims are not in the English language;

(4) All the claims in the U.S. application must sufficiently correspond or be amended to sufficiently correspond to the claim(s) that have novelty, inventive step, and industrial applicability in the PCT application(s);

(5) Examination of the U.S. application has not begun;

(6) Applicant must submit a copy of the latest international work product from the PCT application indicating that the claim(s) have novelty, inventive step, and industrial applicability along with an English translation thereof.

(7) Applicant must submit an IDS listing the documents cited by the PCT examiner in the international work product along with copies of documents except U.S. patents or U.S. patent application publications.

(8) Applicant is required to submit a claims correspondence table in English which indicates how all the claims in the U.S. application correspond to the claims indicated as having novelty, inventive step and industrial applicability in the latest international work product.

Requirements (1-5) and (7-8) above are considered to have been met. However, the request to participate in the PPH pilot program and petition fails to meet requirement (6).

Regarding the requirement of condition (6), petitioner has not submitted an entire copy of the latest international work product from the PCT application indicating that the claim(s) have novelty, inventive step, and industrial applicability along with an English translation thereof. Therefore, this request and petition cannot be granted at this time.

Applicant is given **ONE** opportunity within a time period of **ONE MONTH or THIRTY DAYS**, whichever is longer, from the mailing date of this decision to correct the deficiencies. **NO EXTENSION OF TIME UNDER 37 CFR 1.136 IS PERMITTED.** If the deficiencies are not corrected with the time period given, the application will await action in its regular turn.

Response must be filed via the Electronic Filing System (EFS) using the document description: Petition to make special under PCT – Patent Pros Hwy. Any preliminary amendments and IDS submitted with the PPH documents must be separately indexed as a preliminary amendment and IDS, respectively.

Telephone inquiries concerning this decision should be directed to the undersigned at (571) 272-3226. All other inquiries concerning the examination or status of the application is accessible in the PAIR system at http://www.uspto.gov/ebc/index.html.

/Andrea Smith/
Andrea Smith
Petitions Examiner
Office of Petitions

IN THE UNITED STATES PATENT AND TRADEMARK OFFICE

Applicants	: Takashi OOSAKO	Group Art Unit: 2879
Serial No.	: 12/912,347	Examiner: Not Yet Assigned
Filed	: October 26, 2010	Confirmation No.1879
For	: ORGANIC ELECTROLUMINESCENCE ELEMENT AND MANUFACTURING METHOD THEREOF	

REQUEST FOR RECONSIDERATION OF DISMISSAL OF REQUEST TO PARTICIPATE IN THE PATENT PROSECUTION HIGHWAY PROGRAM

Commissioner for Patents
U.S. Patent and Trademark Office
Customer Service Window, Mail Stop PPH
Randolph Building
401 Dulany Street
Alexandria VA 22314

Sir:

In response to the decision of dismissal, dated February 9, 2012, that was issued in response to the petition filed December 13, 2011 under 37 CFR 1.102(a), Applicant respectfully requests reconsideration of the dismissal in view of the following remarks, the complete English-language translation of the latest international work product attached hereto, as well as the documents supplied with and the discussion in the original petition filed on December 13, 2011.

Remarks begin on page 2 of this paper.

REMARKS

In the Decision on Petition issued on February 9, 2012, the petition was dismissed for failing to adequately meet the requirement of the PPH-PCT program to submit a copy of the latest international work product from the PCT application indicating that the claims have novelty, inventive step, and industrial applicability, along with an English translation thereof. In particular, the Petitions Examiner asserted that petitioner has not submitted an entire copy of the latest international work product from the PCT application together with an entire English translation thereof.

On the other hand, in the above noted Decision on Petition, the Petitions Examiner explicitly noted that all the other requirements of the PPH-PCT program are considered to have been met.

In response to the above noted Decision on Petition, Applicant is submitting, attached to the present paper, a full translation of the international work product (Form PCT/ISA/237). This document indicates that the claims have novelty, inventive step, and industrial applicability. A copy of the entire Japanese language international work product, indicating that the claims have novelty, inventive step and industrial applicability, was attached to the originally filed petition (i.e. Request).

In view of the above submission, taken together with the original Request filed on December 13, 2011, it is respectfully submitted that all of the requirements for a grantable Request to Participate in the PCT-PPH program have been satisfied.

Accordingly, Applicant respectfully requests a decision granting the Request to Participate in the Patent Prosecution Highway Program (PCT-PPH) and granting of the petition under 37 CFR 1.102(a).

Should the Petitions Examiner have any questions regarding the above noted matter or this application, the Examiner is respectfully requested to contact the undersigned at the below listed telephone number.

Respectfully submitted,
Takashi OOSAKO
/William Pieprz/
Reg. No. 33,630
William Pieprz

Bruce H. Bernstein
Reg. No. 29027

February 24, 2012
GREENBLUM & BERNSTEIN, P.L.C.
1950 Roland Clarke Place
Reston, VA 20191
(703) 716-1191

PATENT COOPERATION TREATY

From the
INTERNATIONAL SEARCHING AUTHORITY

To:

PCT

WRITTEN OPINION OF THE
INTERNATIONAL SEARCHING AUTHORITY

(PCT Rule 43*bis*.1)

Date of mailing *(day/month/year)*	15.12.2009
Applicant's or agent's file reference P054361P0	**FOR FURTHER ACTION** See paragraph 2 below

International application No.	International filing date *(day/month/year)*	Priority date *(day/month/year)*
PCT/JP2009/006026	11.11.2009	

International Patent Classification (IPC) or both national classification and IPC
H05B33/22(2006.01)i,H01L51/50(2006.01)i,H05B33/10(2006.01)i,H05B33/12(2006.01)i

Applicant
PANASONIC CORPORATION

1. This opinion contains indications relating to the following items:

- [x] Box No. I Basis of the opinion
- [ ] Box No. II Priority
- [ ] Box No. III Non-establishment of opinion with regard to novelty, inventive step and industrial applicability
- [ ] Box No. IV Lack of unity of invention
- [x] Box No. V Reasoned statement under Rule 43*bis*.1(a)(i) with regard to novelty, inventive step and industrial applicability; citations and explanations supporting such statement
- [ ] Box No. VI Certain documents cited
- [ ] Box No. VII Certain defects in the international application
- [ ] Box No. VIII Certain observations on the international application

2. **FURTHER ACTION**

If a demand for international preliminary examination is made, this opinion will be considered to be a written opinion of the International Preliminary Examining Authority ("IPEA") except that this does not apply where the applicant chooses an Authority other than this one to be the IPEA and the chosen IPEA has notified the International Bureau under Rule 66.1*bis*(b) that written opinions of this International Searching Authority will not be so considered.

If this opinion is, as provided above, considered to be a written opinion of the IPEA, the applicant is invited to submit to the IPEA a written reply together, where appropriate, with amendments, before the expiration of 3 months from the date of mailing of Form PCT/ISA/220 or before the expiration of 22 months from the priority date, whichever expires later.

For further options, see Form PCT/ISA/220.

3. For further details, see notes to Form PCT/ISA/220.

Name and mailing address of the ISA/	Date of completion of this opinion	Authorized officer
Japan Patent Office (ISA/JP) Facsimile No.	07.12.2009	Telephone No.

WRITTEN OPINION OF THE INTERNATIONAL SEARCHING AUTHORITY

International application No.
PCT/JP2009/006026

Box No. I Basis of this opinion

1. With regard to the **language**, this opinion has been established on the basis of:

   ☒ the international application in the language in which it was filed.

   ☐ a translation of the international application into _____ which is the language of a translation furnished for the purposes of international search (Rules 12.3(a) and 23.1(b)).

2. ☐ This opinion has been established taking into account the **rectification of an obvious mistake** authorized by or notified to this Authority under Rule 91 (Rule 43*bis*.1(a))

3. With regard to any **nucleotide and/or amino acid sequence** disclosed in the international application, this opinion has been established on the basis of a sequence listing filed or furnished:

   a. (means)

   ☐ on paper

   ☐ in electronic form

   b. (time)

   ☐ in the international application as filed

   ☐ together with the international application in electronic form

   ☐ subsequently to this Authority for the purposes of search

4. ☐ In addition, in the case that more than one version or copy of a sequence listing has been filed or furnished, the required statements that the information in the subsequent or additional copies is identical to that in the application as filed or does not go beyond the application as filed, as appropriate, were furnished.

5. Additional comments:

WRITTEN OPINION OF THE
INTERNATIONAL SEARCHING AUTHORITY

International application No.
PCT/JP2009/006026

Box No. V Reasoned statement under Rule 43*bis*. 2.1(a)(i) with regard to novelty, inventive step and industrial applicability; citations and explanations supporting such statement

1. Statement

Novelty (N)	Claims	1 - 11	Yes
	Claims		No
Inventive step (IS)	Claims	1 – 11	Yes
	Claims		No
Industrial applicability (IA)	Claims	1 – 11	Yes
	Claims		No

2. Citations and explanations

The invention as claimed in Claims 1 to 11 is not disclosed in any of the documents cited in the International Search Report, and therefore has novelty. In particular, the invention-defining matter of "An organic electroluminescence (EL) element comprising: pixel electrodes; a bank which is placed between adjacent ones of said pixel electrodes and includes apertures each of which corresponds to one of said pixel electrodes; an organic luminescent layer which is placed within each of said apertures; and an upper electrode which is placed above said bank and said organic luminescent layer, wherein a shape of a part of a contour of each of said apertures is a shape that includes curves and cusps, said curves bulging inwards of said aperture, and said cusps each being a connection point of adjacent ones of said curves" is not disclosed in any of the cited documents.

UNITED STATES PATENT AND TRADEMARK OFFICE

Commissioner for Patents
United States Patent and Trademark Office
P.O. Box 1450
Alexandria, VA 22313-1450
www.uspto.gov

GREENBLUM & BERNSTEIN, P.L.C.
1950 ROLAND CLARKE PLACE
RESTON, VA 20191

MAILED
MAR 15 2012
OFFICE OF PETITIONS

In re Application of
Takashi Oosako
Application No.: 12/912,347
Filed: October 26, 2010
Attorney Docket No.: P38266
For: ORGANIC ELECTROLUMINESCENCE ELEMENT AND MANUFACTURING METHOD THEREOF

: DECISION ON REQUEST TO PARTICIPATE IN THE PATENT PROSECUTION HIGHWAY PROGRAM AND PETITION TO MAKE SPECIAL UNDER 37 CFR 1.102(a)

This is a decision on the renewed request to participate in the PCT Patent Prosecution Highway (PCT-PPH) pilot program and the petition under 37 CFR 1.102(a), filed on February 24, 2012, to make the above-identified application special.

The request and petition are **GRANTED**.

Discussion

A grantable request to participate in the PCT-PPH pilot program and petition to make special require:

(1) The U.S. application must have an eligible relationship to one or more PCT applications where the ISA or IPEA are the Australia, Austria, EPO, Finland, JPO, KIPO, NPI, NBPR, Spain, Sweden, USPTO, or CHINA;

(2) At least one claim in the PCT application has novelty, inventive step, and industrial applicability and must be free of any observations in Box VIII in the latest work product in the international stage or applicant must identify and explain why the claim(s) is/are not subject to the observation in Box VIII;

(3) Applicant must submit a copy of the claim(s) from the PCT application(s) that have novelty, inventive step, and industrial applicability along with an English translation thereof and a statement that the English translation is accurate, if the claims are not in the English language;

(4) All the claims in the U.S. application must sufficiently correspond or be amended to sufficiently correspond to the claim(s) that have novelty, inventive step, and industrial applicability in the PCT application(s);

(5) Examination of the U.S. application has not begun;

(6) Applicant must submit a copy of the latest international work product from the PCT application indicating that the claim(s) have novelty, inventive step, and industrial applicability along with an English translation thereof and a statement that the English translation is accurate if the latest international work product is not in the English language;

(7) Applicant must submit an IDS listing the documents cited by the PCT examiner in the international work product along with copies of documents except U.S. patents or U.S. patent application publications.

The request to participate in the PCT-PPH pilot program and petition comply with the above requirements. Accordingly, the above-identified application has been accorded "special" status.

Telephone inquiries concerning this decision should be directed to the undersigned at (571) 272-3226. All other inquiries concerning the examination or status of the application is accessible in the PAIR system at http://www.uspto.gov/ebc.index.html.

This application will be forwarded to the examiner for action on the merits commensurate with this decision.

/Andrea Smith/
Andrea Smith
Petitions Examiner
Office of Petitions

UNITED STATES PATENT AND TRADEMARK OFFICE

UNITED STATES DEPARTMENT OF COMMERCE
United States Patent and Trademark Office
Address: COMMISSIONER FOR PATENTS
P.O. Box 1450
Alexandria, Virginia 22313-1450
www.uspto.gov

APPLICATION NO.	FILING DATE	FIRST NAMED INVENTOR	ATTORNEY DOCKET NO.	CONFIRMATION NO.
12/912,370	10/26/2010	Thomas E. RAMSAY	AVS/101/US	1928

68733 7590 05/06/2011
Rene A. Vazquez
Alix, Yale & Ristas, LLP
750 Main Street
Hartford, CT 06103-2721

EXAMINER
CARTER, AARON W

ART UNIT	PAPER NUMBER
2624	

NOTIFICATION DATE	DELIVERY MODE
05/06/2011	ELECTRONIC

Please find below and/or attached an Office communication concerning this application or proceeding.

The time period for reply, if any, is set in the attached communication.

Notice of the Office communication was sent electronically on above-indicated "Notification Date" to the following e-mail address(es):

rvazquez@pctlaw.com
mouellette@pctlaw.com
nsamuels@pctlaw.com

UNITED STATES PATENT AND TRADEMARK OFFICE

Commissioner for Patents
United States Patent and Trademark Office
P.O. Box 1450
Alexandria, VA 22313-1450
www.uspto.gov

Rene A. Vazquez
Alix, Yale & Ristas, LLP
750 Main Street
Hartford CT 06103-2721

MAY 6 2011

In re Application of :
Ramsay, Thomas E. *et al* :
Serial No.: 12/912,370 :
Filed: October 26, 2010 : DECISION ON PETITION
For: **SYSTEM AND METHOD FOR IDENTIFYING SIGNATURES FOR FEATURES OF INTEREST USING PREDETERMINED COLOR SPACES** : *ACCEPTANCE OF COLOR DRAWINGS*

This is a decision on the petition under 37 CFR §1.184(a) (2), filed October 29, 2010 requesting acceptance color drawings.

The petition requests that the color drawings identified in Figures 1, 2, 6A, 6B, 8A, 8B, 8C, 8E, 8F, 8G, 8H, 8I, 8J, 8K, 8L, 8M, 8N, 9, 10, 11, 12, 15A, 15B, 15C, 16A, 16B,17, 18, 19A, 19B, 20, 21, 22, 23A, 23B, 24A, 24B, 25B, 26, 27, 28, 29, 30, 31, 32, 33, 34, 35, 37, 38, 39, 40, 41, 42, 43, 44 & 45 be accepted in lieu of white drawings.

A grantable petition under 37 C.F.R. §1.84(a) (2) must be accompanied by a fee set forth under 37 C.F.R. § 1.17(h), 3 (three) sets of the color drawings in question, and the specification must contain, or be amended to contain, the following language as the first paragraph in that portion of the specification relating to the brief description of the drawings:

"The file of this patent contains at least one drawing executed in color. Copies of this patent with color drawing(s) will be provided by the Patent and Trademark Office upon request and payment of the necessary fee."

The petition is **GRANTED**.

John Peng
Quality Assurance Specialist
Technology Center 2600
Communications

UNITED STATES PATENT AND TRADEMARK OFFICE

Commissioner for Patents
United States Patent and Trademark Office
P.O. Box 1450
Alexandria, VA 22313-1450
www.uspto.gov

LAW OFFICE OF ALAN W. CANNON
1999 SOUTH BASCOM AVE., SUITE 700
CAMPBELL, CA 95008

MAILED

NOV 03 2011

OFFICE OF PETITIONS

Applicant: William Harrison Zurn
Appl. No.: 12/912,383
Filing Date: October 26, 2010
Title: AUTOMATED VESSEL REPAIR SYSTEM, DEVICES AND METHODS
Attorney Docket No.: ZURN-002DIV
Pub. No.: US 2011/0040177 A1
Pub. Date: February 17, 2011

This is a decision on the request for correction of patent application publication under 37 CFR 1.221(b), received on March 18, 2011, for the above-identified application.

The request is DISMISSED.

Applicant requests that the application be republished because the patent application publication contains a material error on the front page of the publication wherein the inventor's last name was misprinted.

37 CFR 1.221 (b) is applicable "only when the Office makes a material mistake which is apparent from Office records.... Any request for a corrected publication or revised patent application publication other than provided as provided in paragraph (a) of this section must be filed within two months from the date of the patent application publication. This period is not extendable." A material mistake must affect the public's ability to appreciate the technical disclosure of the patent application publication, to determine the scope of the patent application publication or determine the scope of the provisional rights that an applicant may seek to enforce upon issuance of a patent. [1]

The error on the front page of the publication wherein the spelling of the inventor's last name "Zurn" was misprinted as "Zum" may be Office error, but is not a material error under 37 CFR 1.221(b). The typographical error of the inventor's name does not affect the understanding of the application. The mistake does not affect the public's ability to appreciate the technical disclosure of the patent application publication, or determine the scope of the patent application publication or determine the scope of the provisional rights that an applicant may seek to enforce upon issuance of a patent.

[1] Changes to Implement Eighteen-Month Publication of Patent Applications, 65 FR 57023, 57038 (Sept. 20, 2000), 1239, Off. Gaz. Pat. Office Notices 63, 75 (Oct. 10, 2000) (final rule).

On November 5, 2010, a Filing Receipt was mailed by the Office, which improperly listed the last name of the inventor. To avoid this type of problem in the future, applicant's representative should correct the error, if applicable and make a request for a corrected filing receipt prior to export of the application to the publisher and publication of the application. The request for a Corrected Filing Receipt on January 3, 2011 was received too late for the Office to update the Office's records and for use in the publication.

Applicant is encouraged to use and submit an eADS (PTO/SB/14) as an EFS-Web Fillable Form, rather than a scanned PDF image, to benefit from having the data loaded directly into USPTO electronic systems. For questions, contact the Patent EBC (Electronic Business Center):

Telephone: 1-866-217-9197 (toll-free) or E-mail: ebc@uspto.gov.
571-272-4100 (local)

The applicant is advised that a "request for republication of an application previously published" may be filed under 37 CFR 1.221(a). Such a request for republication "must include a copy of the application compliance with the Office's electronic filing system requirements and be accompanied by the publication fee set forth in § 1.18(d) and the processing fee set forth in § 1.17(i)." If the request for republication does not comply with the electronic filing system requirements, the republication will not take place and the publication fee set forth in § 1.18(d) will be refunded. The processing fee will be retained.

A guide for filing a request for a Pre-Grant Publication, such as a request for republication, may be found on the link below:

http://www.uspto.gov/patents/process/file/efs/guidance/index.jsp

http://www.uspto.gov/ebc/portal/efs/pgpub_quickstart.pdf

Any request for republication under 37 CFR 1.221(a), must be submitted via the EFS system, as a "Pre-Grant Publication".

The file does not indicate a change of address has been submitted, although the address given on the petition differs from the address of record. If appropriate, a change of address should be filed in accordance with MPEP 601.03. A courtesy copy of this decision is being mailed to the address given on the petition; however, the Office will mail all future correspondence solely to the address of record.

Inquiries relating to this matter may be directed to Sherry D. Brinkley at (571) 272-3204.

/Christopher Bottorff/

Christopher Bottorff
Petitions Examiner
Office of Petitions

cc: ALAN W. CANNON
LAW OFFICE OF ALAN W. CANNON
942 MESA OAK COURT
SUNNYVALE, CA 94086

UNITED STATES PATENT AND TRADEMARK OFFICE

UNITED STATES DEPARTMENT OF COMMERCE
United States Patent and Trademark Office
Address: COMMISSIONER FOR PATENTS
P.O. Box 1450
Alexandria, Virginia 22313-1450
www.uspto.gov

APPLICATION NO.	FILING DATE	FIRST NAMED INVENTOR	ATTORNEY DOCKET NO.	CONFIRMATION NO.
12/912,388	10/26/2010	Takanari Matsui	04536/234001	1955

22511 7590 05/05/2011
OSHA LIANG L.L.P.
TWO HOUSTON CENTER
909 FANNIN, SUITE 3500
HOUSTON, TX 77010

EXAMINER
WALCZAK, DAVID J

ART UNIT	PAPER NUMBER
3751	

NOTIFICATION DATE	DELIVERY MODE
05/05/2011	ELECTRONIC

Please find below and/or attached an Office communication concerning this application or proceeding.

The time period for reply, if any, is set in the attached communication.

Notice of the Office communication was sent electronically on above-indicated "Notification Date" to the following e-mail address(es):

docketing@oshaliang.com
hathaway@oshaliang.com
kennedy@oshaliang.com

UNITED STATES PATENT AND TRADEMARK OFFICE

Commissioner for Patents
United States Patent and Trademark Office
P.O. Box 1450
Alexandria, VA 22313-1450

OSHA LIANG L.L.P.
TWO HOUSTON CENTER
909 FANNIN, SUITE 3500
HOUSTON TX 77010

In re Application of: MATSUI, TAKANARI Serial No.: 12/912,388 Filed: Oct. 26, 2010 Docket: 04536/234001 Title: ILLUSTRATING TOOL	DECISION ON REQUEST TO PARTICIPATE IN PATENT PROSECUTION HIGHWAY (PPH) AND PETITION TO MAKE SPECIAL UNDER 37 CFR 1.102(a)

This is a decision on the request to participate in the Patent Prosecution Highway (PPH) program and the petition under 37 CFR 1.102(a), filed May 3, 2011, to make the above-identified application special.

The request and petition are **GRANTED**.

A grantable request to participate in the PPH program and petition to make special require:

(1) The U.S. application must validly claim priority under 35 U.S.C. 119(a) to one or more corresponding application(s) filed in the JPO or to a PCT application that does not contain any priority claim, or the U.S. application must be a national stage entry of a PCT application that does not contain any priority claim;
(2) Applicant must submit a copy of the allowable/patentable claim(s) from the JPO application(s) along with an English translation thereof and a statement that the English translation is accurate;
(3) All the claims in the U.S. application must sufficiently correspond or be amended to sufficiently correspond to the allowable/patentable claim(s) in the JPO application(s);
(4) Examination of the U.S. application has not begun;
(5) Applicant must submit a copy of all the office actions from each of the JPO application(s) containing the allowable/patentable claim(s) along with an English translation thereof and a statement that the English translation is accurate; and
(6) Applicant must submit an IDS listing the documents cited by the JPO examiner in the JPO office action along with copies of documents except U.S. patents or U.S. patent application publications.

In light of the petition being properly submitted, the request to participate in the PPH program and the petition comply with the above requirements. Accordingly, the above-identified application has been accorded "special" status.

The applicant is encouraged to cite and submit all relevant prior art references, if any, to facilitate examination in this application. This application will be forwarded to an examiner for examination.

Telephone inquiries concerning this decision should be directed to Henry C. Yuen at 571-272-4856. All other inquiries concerning the examination or status of the application should be directed to Greg Huson, SPE of Art Unit 3751, and 571-272-4487 for Class 401/1 and also accessible in the PAIR system at http://www.uspto.gov/ebc.index.html.

Petition is **granted**.

/Henry C. Yuen/

Henry C. Yuen, Special Programs Examiner
Technology Center 3700 – Mechanical Engineering,
Manufacturing and Products
571-272-4856

UNITED STATES PATENT AND TRADEMARK OFFICE

Commissioner for Patents
United States Patent and Trademark Office
P.O. Box 1450
Alexandria, VA 22313-1450
www.uspto.gov

DLA PIPER LLP (US)
4365 EXECUTIVE DRIVE
SUITE 1100
SAN DIEGO CA 92121-2133

MAILED

FEB 27 2012

OFFICE OF PETITIONS

In re Application of	:	
Kenneth W. Carpenter et al.	:	
Application No. 12/912,440	:	DECISION ON PETITION
Filed: October 26, 2010	:	TO WITHDRAW
Attorney Docket No. **MEDIV2030-5**	:	FROM RECORD
	:	

This is a decision on the Request to Withdraw as attorney or agent of record under 37 CFR § 1.36(b), filed February 14, 2012.

The request is **NOT APPROVED**.

A review of the file record indicates that Lisa A Haile or any attorneys/agents associated with Customer Number 28213 does not have power of attorney or was ever given power of attorney in the above-identified application. Accordingly, the request to withdraw under 37 CFR § 1.36(b) is not applicable.

All future communications from the Office will continue to be directed to the address of record until otherwise properly notified by the applicant.

Telephone inquires concerning this decision should be directed to the undersigned at 571-272-4584.

/JoAnne Burke/
JoAnne Burke
Petitions Examiner
Office of Petitions

Doc code : PET.OP.AGE
Description : Petition to make special based on Age/Health

PTO/SB/130 (07-09)
Approved for use through 07/31/2012. OMB 0651- 0031
U.S. Patent and Trademark Office; U.S. DEPARTMENT OF COMMERCE
Under the Paperwork Reduction Act of 1995, no persons are required to respond to a collection of information unless it contains a valid OMB control number

PETITION TO MAKE SPECIAL BASED ON AGE FOR ADVANCEMENT OF EXAMINATION UNDER 37 CFR 1.102(c)(1)

Application Information

Application Number	12912518	Confirmation Number	2210	Filing Date	2010-10-26
Attorney Docket Number (optional)	08895-0059003	Art Unit		Examiner	
First Named Inventor	Marshall MEDOFF				
Title of Invention	Processing Biomass				

Attention: Office of Petitions
An application may be made special for advancement of examination upon filing of a petition showing that the applicant is 65 years of age, or more. No fee is required with such a petition. See 37 CFR 1.102(c)(1) and MPEP 708.02 (IV).

APPLICANT HEREBY PETITIONS TO MAKE SPECIAL FOR ADVANCEMENT OF EXAMINATION IN THIS APPLICATION UNDER 37 CFR 1.102(c)(1) and MPEP 708.02 (IV) ON THE BASIS OF THE APPLICANT'S AGE.

A grantable petition requires one of the following items:
(1) Statement by one named inventor in the application that he/she is 65 years of age, or more; or
(2) Certification by a registered attorney/agent having evidence such as a birth certificate, passport, driver's license, etc. showing one named inventor in the application is 65 years of age, or more.

Name of Inventor who is 65 years of age, or older

Given Name	Middle Name	Family Name	Suffix
Marshall		MEDOFF	

A signature of the applicant or representative is required in accordance with 37 CFR 1.33 and 10.18.
Please see 37 CFR 1.4(d) for the format of the signature.

Select (1) or (2) :

○ (1) I am an inventor in this application and I am 65 years of age, or more.

◉ (2) I am an attorney or agent registered to practice before the Patent and Trademark Office, and I certify that I am in possession of evidence, and will retain such in the application file record, showing that the inventor listed above is 65 years of age, or more.

Signature	/Celia H. Leber/	Date (YYYY-MM-DD)	2010-10-26
Name	Celia H. Leber	Registration Number	33524

PTO/SB/130 (07-09)
Approved for use through 07/31/2012. OMB 0651- 0031
U.S. Patent and Trademark Office; U.S. DEPARTMENT OF COMMERCE
Under the Paperwork Reduction Act of 1995, no persons are required to respond to a collection of information unless it contains a valid OMB control number

Privacy Act Statement

The Privacy Act of 1974 (P.L. 93-579) requires that you be given certain information in connection with your submission of the attached form related to a patent application or patent. Accordingly, pursuant to the requirements of the Act, please be advised that: (1) the general authority for the collection of this information is 35 U.S.C. 2(b)(2); (2) furnishing of the information solicited is voluntary; and (3) the principal purpose for which the information is used by the U.S. Patent and Trademark Office is to process and/or examine your submission related to a patent application or patent. If you do not furnish the requested information, the U.S. Patent and Trademark Office may not be able to process and/or examine your submission, which may result in termination of proceedings or abandonment of the application or expiration of the patent.

The information provided by you in this form will be subject to the following routine uses:

1. The information on this form will be treated confidentially to the extent allowed under the Freedom of Information Act (5 U.S.C. 552) and the Privacy Act (5 U.S.C. 552a). Records from this system of records may be disclosed to the Department of Justice to determine whether the Fr eedom of Information Act requires disclosure of these records.

2. A record from this system of records may be disclosed, as a routine use, in the course of presenting evidence to a court, magistrate, or administrative tribunal, including disclosures to opposing counsel in the course of settlement negotiations.

3. A record in this system of records may be disclosed, as a routine use, to a Member of Congress submitting a request involving an individual, to whom the record pertains, when the individual has requested assistance from the Member with respect to the subject matter of the record.

4. A record in this system of records may be disclosed, as a routine use, to a contractor of the Agency having need for the information in order to perform a contract. Recipients of information shall be required to comply with the requirements of the Privacy Act of 1974, as amended, pursuant to 5 U.S.C. 552a(m).

5. A record related to an International Application filed under the Patent Cooperation Treaty in this system of records may be disclosed, as a routine use, to the International Bureau of the World Intellectual Property Organization, pursuant to the Patent Cooperation Treaty.

6. A record in this system of records may be disclosed, as a routine use, to another federal agency for purposes of National Security review (35 U.S.C. 181) and for review pursuant to the Atomic Energy Act (42 U.S.C. 218(c)).

7. A record from this system of records may be disclosed, as a routine use, to the Administrator, General Services, or his/her designee, during an inspection of records conducted by GSA as part of that agency's responsibility to recommend improvements in records management practices and programs, under authority of 44 U.S.C. 2904 and 2906. Such disclosure shall be made in accordance with the GSA regulations governing inspection of records for this purpose, and any other relevant (i.e., GSA or Commerce) directive. Such disclosure shall not be used to make determinations about indivi duals.

8. A record from this system of records may be disclosed, as a routine use, to the public after either publication of the application pursuant to 35 U.S.C. 122(b) or issuance of a patent pursuant to 35 U.S.C. 151. Further, a record may be disclosed, subject to the limitations of 37 CFR 1.14, as a routine use, to the public if the record was filed in an application which became abandoned or in which the proceedings were terminated and which application is referenced by either a published application, an application open to public inspections or an issued patent.

9. A record from this system of records may be disclosed, as a routine use, to a Federal, State, or local law enforcement agency, if the USPTO becomes aware of a violation or potential violation of law or regulation.

UNITED STATES PATENT AND TRADEMARK OFFICE

Commissioner for Patents
United States Patent and Trademark Office
P.O. Box 1450
Alexandria, VA 22313-1450
www.uspto.gov

In re Application of
Marshall MEDOFF

Application No. 12912518

Filed:

Attorney Docket No. 08895-0059003

:DECISION ON PETITION TO MAKE SPECIAL
:UNDER 37 CFR 1.102(c)(1)

This is a decision on the electronic petition under 37 CFR 1.102 (c)(1), filed 26-OCT-2010 to make the above-identified application special based on applicant's age as set forth in MPEP § 708.02, Section IV.

The petition is **GRANTED**.

A grantable petition to make an application special under 37 CFR 1.102(c)(1), MPEP § 708.02, Section IV: Applicant's Age must include a statement by applicant or a registered practitioner having evidence that applicant is at least 65 years of age. No fee is required.

Accordingly, the above-identified application has been accorded "special" status and will be taken up for action by the examiner upon the completion of all pre-examination processing.

Telephone inquiries concerning this electronic decision should be directed to the Electronic Business Center at 866-217-9197.

All other inquiries concerning either the examination or status of the application should be directed to the Technology Center.

Doc Code: PET.GREEN
Document Description: Petition for Green Tech Pilot

PTO/SB/420 (11-10)
Approved for use through 01/31/2011. OMB 0651-0062
U.S. Patent and Trademark Office; U. S. DEPARTMENT OF COMMERCE
Under the Paperwork Reduction Act of 1995, no persons are required to respond to a collection of information unless it displays a valid OMB control number.

PETITION TO MAKE SPECIAL UNDER THE GREEN TECHNOLOGY PILOT PROGRAM

Attorney Docket Number: L435 0022/GNM	Application Number (if known): 12/912576	Filing date: 26 October 2010
First Named Inventor: GROTKOWSKI, Miroslaw Marek		
Title: EFFICIENT ELECTRICALLY ISOLATED LIGHT SOURCES		

APPLICANT HEREBY REQUESTS TO PARTICIPATE IN THE GREEN TECHNOLOGY PILOT PROGRAM FOR THE ABOVE-IDENTIFIED APPLICATION. See Instruction Sheet on page 2.

This petition must be timely filed electronically using the USPTO electronic filing system, EFS-Web.

1. By filing this petition:

   Applicant is requesting early publication: Applicant hereby requests early publication under 37 CFR 1.219 and the publication fee set forth in 37 CFR 1.18(d) accompanies this request.

2. By filing this petition: applicant is agreeing to make an election without traverse in a telephonic interview and elect an invention that meets the eligibility requirements for the Green Technology Pilot Program, if the Office determines that the claims are not obviously directed to a single invention. See Instruction Sheet.

3. This request is accompanied by statements of special status for the eligibility requirement.

4. The application contains no more than three (3) independent claims and twenty (20) total claims.

5. The application does not contain any multiple dependent claims.

6. Other attachments: _____

Signature /GavinNManning/	Date 2011-01-07
Name (Print/Typed) Gavin N. Manning	Registration Number 36412

Note: *Signatures of all the inventors or assignees of record of the entire interest or their representative(s) are required in accordance with 37 CFR 1.33 and 11.18. Please see 37 CFR 1.4(d) for the form of the signature. If necessary, submit multiple forms for more than one signature see below*.*

☒ *Total of 1 forms are submitted.

The information is required to obtain or retain a benefit by the public which is to file (and by the USPTO to process) an application. Confidentiality is governed by 35 U.S.C. 122 and 37 CFR 1.11 and 1.14. This collection is estimated to take 12 hours to complete, including gathering, preparing, and submitting the completed application form to the USPTO. Time will vary depending upon the individual case. Any comments on the amount of time you require to complete this form and/or suggestions for reducing this burden, should be sent to the Chief Information Officer, U.S. Patent and Trademark Office, U.S. Department of Commerce, P.O. Box 1450, Alexandria, VA 22313-1450. DO NOT SEND FEES OR COMPLETED FORMS TO THIS ADDRESS. **SEND TO: Commissioner for Patents, P.O. Box 1450, Alexandria, VA 22313-1450.**

If you need assistance in completing the form, call 1-800-PTO-9199 and select option 2.

Under the Paperwork Reduction Act of 1995, no persons are required to respond to a collection of information unless it displays a valid OMB control number.

Instruction Sheet for Petition to Make Special Under the Green Technology Pilot Program

(Not to be Submitted to the USPTO)

The following is a summary of the requirements (for more information see the notices (i) "Pilot Program for Green Technologies Including Greenhouse Gas Reduction," (ii) "Elimination of Classification Requirement in the Green Technology Pilot Program," and (iii) "Expansion and Extension of the Green Technology Pilot Program," available on the USPTO web site at http://www.uspto.gov/patents/init_events/green_tech.jsp):

1) The application must be a non-reissue, non-provisional utility application filed under 35 U.S.C. 111 (a), or an international application that has entered the national stage in compliance with 35 U.S.C. 371, irrespective of the filing date of the application. Reexamination proceedings are excluded from this pilot program.

2) The application must contain three or fewer independent claims and twenty or fewer total claims. The application must not contain any multiple dependent claims. For an application that contains more than three independent claims or twenty total claims, or multiple dependent claims, applicant must file a preliminary amendment in compliance with 37 CFR 1.121 to cancel the excess claims and/or the multiple dependent claims at the time the petition to make special is filed.

3) The claims must be directed to a single invention that materially enhances the quality of the environment, or that materially contributes to: (1) the discovery or development of renewable energy resources; (2) the more efficient utilization and conservation of energy resources; or (3) green house gas emission reduction (see the eligibility requirements of sections II and III of the notice (i) cited above). The petition must include a statement that, if the USPTO determines that the claims are directed to multiple inventions (e.g., in a restriction requirement), applicant will agree to make an election without traverse in a telephonic interview, and elect an invention that meets the eligibility requirements in section II or III of the notice (i) cited above.

4) The petition to make special must be timely filed electronically using the USPTO electronic filing system, EFS-Web, and selecting the document description of "Petition for Green Tech Pilot" on the EFS-Web screen. Applicant should use form PTO/SB/420, which is available as a Portable Document Format (PDF) fillable form in EFS-Web and on the USPTO Web site.

5) The petition to make special must be filed at least one day prior to the date that a first Office action (which may be an Office action containing only a restriction requirement) appears in the Patent Application Information Retrieval (PAIR) system. Applicant may check the status of the application using PAIR.

6) The petition to make special must be accompanied by a request for early publication in compliance with 37 CFR 1.219 and the publication fee set forth in 37 CFR 1.18(d).

Privacy Act Statement

The **Privacy Act of 1974 (P.L. 93-579)** requires that you be given certain information in connection with your submission of the attached form related to a patent application or patent. Accordingly, pursuant to the requirements of the Act, please be advised that: (1) the general authority for the collection of this information is 35 U.S.C. 2(b)(2); (2) furnishing of the information solicited is voluntary; and (3) the principal purpose for which the information is used by the U.S. Patent and Trademark Office is to process and/or examine your submission related to a patent application or patent. If you do not furnish the requested information, the U.S. Patent and Trademark Office may not be able to process and/or examine your submission, which may result in termination of proceedings or abandonment of the application or expiration of the patent.

The information provided by you in this form will be subject to the following routine uses:

1. The information on this form will be treated confidentially to the extent allowed under the Freedom of Information Act (5 U.S.C. 552) and the Privacy Act (5 U.S.C 552a). Records from this system of records may be disclosed to the Department of Justice to determine whether disclosure of these records is required by the Freedom of Information Act.
2. A record from this system of records may be disclosed, as a routine use, in the course of presenting evidence to a court, magistrate, or administrative tribunal, including disclosures to opposing counsel in the course of settlement negotiations.
3. A record in this system of records may be disclosed, as a routine use, to a Member of Congress submitting a request involving an individual, to whom the record pertains, when the individual has requested assistance from the Member with respect to the subject matter of the record.
4. A record in this system of records may be disclosed, as a routine use, to a contractor of the Agency having need for the information in order to perform a contract. Recipients of information shall be required to comply with the requirements of the Privacy Act of 1974, as amended, pursuant to 5 U.S.C. 552a(m).
5. A record related to an International Application filed under the Patent Cooperation Treaty in this system of records may be disclosed, as a routine use, to the International Bureau of the World Intellectual Property Organization, pursuant to the Patent Cooperation Treaty.
6. A record in this system of records may be disclosed, as a routine use, to another federal agency for purposes of National Security review (35 U.S.C. 181) and for review pursuant to the Atomic Energy Act (42 U.S.C. 218(c)).
7. A record from this system of records may be disclosed, as a routine use, to the Administrator, General Services, or his/her designee, during an inspection of records conducted by GSA as part of that agency's responsibility to recommend improvements in records management practices and programs, under authority of 44 U.S.C. 2904 and 2906. Such disclosure shall be made in accordance with the GSA regulations governing inspection of records for this purpose, and any other relevant (*i.e.*, GSA or Commerce) directive. Such disclosure shall not be used to make determinations about individuals.
8. A record from this system of records may be disclosed, as a routine use, to the public after either publication of the application pursuant to 35 U.S.C. 122(b) or issuance of a patent pursuant to 35 U.S.C. 151. Further, a record may be disclosed, subject to the limitations of 37 CFR 1.14, as a routine use, to the public if the record was filed in an application which became abandoned or in which the proceedings were terminated and which application is referenced by either a published application, an application open to public inspection or an issued patent.
9. A record from this system of records may be disclosed, as a routine use, to a Federal, State, or local law enforcement agency, if the USPTO becomes aware of a violation or potential violation of law or regulation.

UNITED STATES PATENT AND TRADEMARK OFFICE

UNITED STATES DEPARTMENT OF COMMERCE
United States Patent and Trademark Office
Address: COMMISSIONER FOR PATENTS
P.O. Box 1450
Alexandria, Virginia 22313-1450
www.uspto.gov

APPLICATION NO.	FILING DATE	FIRST NAMED INVENTOR	ATTORNEY DOCKET NO.	CONFIRMATION NO.
12/912,576	10/26/2010	Miroslaw Marek Grotkowski	L435 0022/GNM	2328

720 7590 05/26/2011
OYEN, WIGGS, GREEN & MUTALA LLP
480 - THE STATION
601 WEST CORDOVA STREET
VANCOUVER, BC V6B 1G1
CANADA

EXAMINER

ART UNIT	PAPER NUMBER
2838	

NOTIFICATION DATE	DELIVERY MODE
05/26/2011	ELECTRONIC

Please find below and/or attached an Office communication concerning this application or proceeding.

The time period for reply, if any, is set in the attached communication.

Notice of the Office communication was sent electronically on above-indicated "Notification Date" to the following e-mail address(es):

mail@patentable.com

UNITED STATES PATENT AND TRADEMARK OFFICE

Commissioner for Patents
United States Patent and Trademark Office
P.O. Box 1450
Alexandria, VA 22313-1450
www.uspto.gov

OYEN, WIGGS, GREEN & MUTALA LLP
480 - THE STATION
601 WEST CORDOVA STREET
VANCOUVER BC V6B 1G1 CA CANADA

In re Application of	:	
GROTKOWSKI et al.	:	DECISION ON PETITION
Application No. 12/912,576	:	TO MAKE SPECIAL UNDER
Filed: October 26, 2011	:	THE GREEN TECHNOLOGY
Attorney Docket No. L435 0022/GNM	:	PILOT PROGRAM

This is a decision on the petition under 37 CFR 1.102, filed on January 07, 2011, to make the above-identified application special under the pilot program for applications pertaining to Green Technologies as set forth 74 Federal Register Notice 64666 (December 8, 2009) and amended by 75 Federal Register Notice 28554 (May 21, 2010) and 75 Federal Register Notice 69049 (November 10, 2010).

The petition is **GRANTED**.

A grantable petition to make an application special under 37 CFR 1.102 and the pilot program as set forth in 74 FR 64666 must be directed to a nonprovisional application filed under 35 USC 111(a) or be a national stage entry under 35 USC 371, exclusive of any reissue applications.

In order to qualify for special status, the following requirements must be met. 1) The application must have no more than 3 independent claims and no more than 20 total claims. 2) The application must not contain any multiple dependent claims. 3) The petition must state the basis for seeking special status, i.e., the claimed invention either: A) materially enhances the quality of the environment or B) materially contributes to: i) the discovery or development of renewable energy resources, ii) the more efficient utilization and conservation of energy resources, or iii) greenhouse gas emission reduction. 4) If the disclosure is not clear on its face that the claimed invention materially contributes under category (A) or (B), the petition must be accompanied by a statement by the applicant, assignee, or an attorney/agent registered to practice before the Office explaining how the materiality standard is met. 5) A statement that applicant will agree to make an election without traverse in a telephonic interview if a restriction requirement is made by the examiner. 6) The petition to make special must be filed electronically. 7) The petition must be filed at least one day prior to the date that a first Office Action appears in the Patent Application Information Retrieval (PAIR) system. 8) The petition must be accompanied by a request for early publication in compliance with 37 CFR 1.219 and include the publication fee as set forth in 37 CFR 1.18(d).

The requirement for a fee for consideration of the petition to make special for applications pertaining to Green Technologies has been waived.

The instant petition complies with items 1 – 8 above. Accordingly, the above-identified application has been accorded "special" status.

Telephone inquires concerning this decision should be directed to Lee W. Young at 571-272-4549.

The application is being forwarded to the Technology Center Art Unit 2838 for action on the merits commensurate with this decision.

Lee W. Young
Quality Assurance Specialist
Technology Center 2800

UNITED STATES PATENT AND TRADEMARK OFFICE

Commissioner for Patents
United States Patent and Trademark Office
P.O. Box 1450
Alexandria, VA 22313-1450
www.uspto.gov

In re Application of
Charles A. Lavens

Application No. 12912585

Filed: October 26,2010

Attorney Docket No. 5019.300

:DECISION ON PETITION TO MAKE SPECIAL
:UNDER 37 CFR 1.102(c)(1)

This is a decision on the electronic petition under 37 CFR 1.102 (c)(1), filed 30-JAN-2011 to make the above-identified application special based on applicant's age as set forth in MPEP § 708.02, Section IV.

The petition is **GRANTED**.

A grantable petition to make an application special under 37 CFR 1.102(c)(1), MPEP § 708.02, Section IV: Applicant's Age must include a statement by applicant or a registered practitioner having evidence that applicant is at least 65 years of age. No fee is required.

Accordingly, the above-identified application has been accorded "special" status and will be taken up for action by the examiner upon the completion of all pre-examination processing.

Telephone inquiries concerning this electronic decision should be directed to the Electronic Business Center at 866-217-9197.

All other inquiries concerning either the examination or status of the application should be directed to the Technology Center.

UNITED STATES PATENT AND TRADEMARK OFFICE

Commissioner for Patents
United States Patent and Trademark Office
P.O. Box 1450
Alexandria, VA 22313-1450
www.uspto.gov

MAILED
JUN 20 2011
OFFICE OF PETITIONS

FOLEY & LARDNER LLP
PO BOX 80278
SAN DIEGO CA 92138-0278

In re Application of	:	
Albitar, et al.	:	
Application No. 12/912,600	:	DECISION ACCORDING STATUS
Filed: June 9, 2011	:	UNDER 37 CFR 1.47(a)
Attorney Docket No. 034827-0961	:	

This is in response to the petition under 37 CFR 1.47(a), filed June 9, 2011.

The petition under 37 CFR 1.47(a) is **GRANTED**.

With the instant petition, petitioner has shown that a copy of the application papers was forwarded to Albitar on January 14, 2011. Petitioner has included a copy of an e-mail from Albitar, stating his refusal to sign the declaration.

Accordingly, it is concluded that petitioner has demonstrated that inventor Albitar has refused to sign the declaration after having been presented with the application papers.

The above-identified application and papers have been reviewed and found to be in compliance with 37 CFR 1.47(a). Accordingly, the above-identified application is hereby accorded Rule 1.47(a) status. As provided in 37 CFR 1.47(c), this Office will forward notice of this application's filing to the non-signing inventor at the last known address provided in the petition. Notice of the filing of this application will also be published in the Official Gazette.

The matter is being forwarded to Office of Patent Application Processing for pre-examination processing.

Telephone inquiries related to this decision may be directed to the undersigned at (571)272-3207.

Cliff Congo
Petitions Attorney
Office of Petitions

UNITED STATES PATENT AND TRADEMARK OFFICE

Commissioner for Patents
United States Patent and Trademark Office
P.O. Box 1450
Alexandria, VA 22313-1450
www.uspto.gov

MAHER ALBITAR
3 RIVER ROCK RD
COTO DE CAZA CA 92679

MAILED
JUN 20 2011
OFFICE OF PETITIONS

In re Application of
Albitar, et al.
Application No. 12/912,600
Filed: October 26, 2010
Title: Ubiquitin Proteasome System Profiling for Diagnosis of Chronic Liver Disease

LETTER

Dear Mr. Albitar:

You are named as a joint inventor in the above-identified United States patent application filed under the provisions of 35 USC 116 (United States Code) and 37 CFR 1.47(a), Rules of Practice in Patent Cases. Should a patent be granted on the application you will be designated therein as a joint inventor.

As a joint inventor, you are entitled to inspect any paper in the file wrapper of the application, order copies of all or any part thereof (at a prepaid cost per 37 CFR 1.19) or make your position of record in the application. Alternatively, you may arrange to do any of the preceding through a registered patent attorney or agent presenting written authorization from you. If you care to join the application, agent of record would presumably assist you. Joining in the application would entail the filing of an appropriate oath or declaration by you pursuant to 37 CFR 1.63.

Telephone inquiries regarding this communication should be directed to Petitions Attorney Cliff Congo at (571)272-3207. Requests for information regarding your application should be directed to the File Information Unit at (703) 308-2733. Information regarding how to pay for and order a copy of the application, or a specific paper in the application, should be directed to the Certification Division at (703) 308-9726 or 1-800-972-6382 (outside the Washington D.C. area).

Cliff Congo
Petitions Attorney
Office of Petitions

UNITED STATES PATENT AND TRADEMARK OFFICE

Commissioner for Patents
United States Patent and Trademark Office
P.O. Box 1450
Alexandria, VA 22313-1450
www.uspto.gov

LEVINE BAGADE HAN LLP
2400 GENG ROAD, SUITE 120
PALO ALTO, CA 94303

MAILED

OCT 03 2011

OFFICE OF PETITIONS

In re Application of
Raman K. Rao, et al.
Application No. 12/912,607
Filed: October 26, 2010
Attorney Docket No. PA5400US

DECISION ON REQUEST FOR REVOCATION OF POWER OF ATTORNEY

This is a decision on the Request to Revoke the attorney or agent of record under 37 C.F.R. § 1.36(a), filed September 27, 2011.

The request is **NOT APPROVED**.

A power of attorney, pursuant to § 1.32(b), may be revoked at any stage in the proceeding of a case by an applicant for patent (§ 1.41(b)) or an assignee of the entire interest of the applicant under § 3.71(b). Fewer than all of the applicants (or by fewer than the assignee of the entire interest of the applicant) may only revoke the power of attorney upon a showing of sufficient cause, and payment of the petition fee set forth § 1.17(h). For the assignee to take action a proper statement under § 3.73(b) is required.

The request cannot be approved because the statement under 3.73(b) is not proper or no statement under 3.73(b) was filed.

In order to request or take action in a patent matter, the assignee must establish its ownership of the patent to the satisfaction of the Director. In this regard, a Statement under 37 CFR 3.73(b) must have either: (i) documentary evidence of a chain of title from the original owner to the assignee (*e.g.*, copy of an executed assignment), and a statement affirming that the documentary evidence of the chain of title from the original owner to the assignee was or concurrently is being submitted for recordation pursuant to § 3.11; or (ii) a statement specifying where documentary evidence of a chain of title from the original owner to the assignee is recorded in the assignment records of the Office (*e.g.*, reel and frame number). The power of attorney filed on September 27, 2011 does not include the proper reel and frame number on the statement under 37 CFR 3.73(b).

All future communications from the Office will continue to be directed to the above-listed address until otherwise notified by applicant.

Telephone inquiries concerning this decision should be directed to undersigned at 571-272-1642.

/AMW/
April M. Wise
Petitions Examiner
Office of Petitions

Doc Code: PET.GREEN
Document Description: Petition for Green Tech Pilot

PTO/SB/420 (03-11)

PETITION TO MAKE SPECIAL UNDER THE GREEN TECHNOLOGY PILOT PROGRAM

Attorney Docket Number: L435 0017/RAJ	Application Number (if known): 12912613	Filing date: 2010-10-26

First Named Inventor: GROTKOWSKI, Miroslaw Marek

Title: HOLDING CURRENT CIRCUIT FOR PHASE-CUT POWER CONTROL

APPLICANT HEREBY REQUESTS TO PARTICIPATE IN THE GREEN TECHNOLOGY PILOT PROGRAM FOR THE ABOVE-IDENTIFIED APPLICATION. See Instruction Sheet on page 2.

This petition must be timely filed electronically using the USPTO electronic filing system, EFS-Web.

1. By filing this petition:

   Applicant is requesting early publication: Applicant hereby requests early publication under 37 CFR 1.219 and the publication fee set forth in 37 CFR 1.18(d) accompanies this request.

2. By filing this petition: applicant is agreeing to make an election without traverse in a telephonic interview and elect an invention that meets the eligibility requirements for the Green Technology Pilot Program, if the Office determines that the claims are not obviously directed to a single invention. See Instruction Sheet.

3. This request is accompanied by statements of special status for the eligibility requirement.

4. The application contains no more than three (3) independent claims and twenty (20) total claims.

5. The application does not contain any multiple dependent claims.

6. Other attachments: _____

Signature /RichardAJohnson/	Date 2011-07-29
Name (Print/Typed) Richard A. Johnson	Registration Number 56080

Note: *Signatures of all the inventors or assignees of record of the entire interest or their representative(s) are required in accordance with 37 CFR 1.33 and 11.18. Please see 37 CFR 1.4(d) for the form of the signature. If necessary, submit multiple forms for more than one signature, see below*.*

☒ *Total of 1 forms are submitted.

If you need assistance in completing the form, call 1-800-PTO-9199 and select option 2.

Instruction Sheet for
Petition to Make Special Under the Green Technology Pilot Program

(Not to be Submitted to the USPTO)

The following is a summary of the requirements (for more information see the notices (i) "Pilot Program for Green Technologies Including Greenhouse Gas Reduction," (ii) "Elimination of Classification Requirement in the Green Technology Pilot Program," and (iii) "Expansion and Extension of the Green Technology Pilot Program," available on the USPTO web site at http://www.uspto.gov/patents/init_events/green_tech.jsp):

(1) The application must be a non-reissue, non-provisional utility application filed under 35 U.S.C. 111(a), or an international application that has entered the national stage in compliance with 35 U.S.C. 371, irrespective of the filing date of the application. Reexamination proceedings are excluded from this pilot program.

(2) The application must contain three or fewer independent claims and twenty or fewer total claims. The application must not contain any multiple dependent claims. For an application that contains more than three independent claims or twenty total claims, or multiple dependent claims, applicant must file a preliminary amendment in compliance with 37 CFR 1.121 to cancel the excess claims and/or the multiple dependent claims at the time the petition to make special is filed.

(3) The claims must be directed to a single invention that materially enhances the quality of the environment, or that materially contributes to: (1) the discovery or development of renewable energy resources; (2) the more efficient utilization and conservation of energy resources; or (3) green house gas emission reduction (see the eligibility requirements of sections II and III of the notice (i) cited above). The petition must include a statement that, if the USPTO determines that the claims are directed to multiple inventions (e.g., in a restriction requirement), applicant will agree to make an election without traverse in a telephonic interview, and elect an invention that meets the eligibility requirements in section II or III of the notice (i) cited above.

(4) The petition to make special must be timely filed electronically using the USPTO electronic filing system, EFS-Web, and selecting the document description of "Petition for Green Tech Pilot" on the EFS-Web screen. Applicant should use form PTO/SB/420, which is available as a Portable Document Format (PDF) fillable form in EFS-Web and on the USPTO Web site.

(5) The petition to make special must be filed at least one day prior to the date that a first Office action (which may be an Office action containing only a restriction requirement) appears in the Patent Application Information Retrieval (PAIR) system. Applicant may check the status of the application using PAIR.

(6) The petition to make special must be accompanied by a request for early publication in compliance with 37 CFR 1.219 and the publication fee set forth in 37 CFR 1.18(d).

Privacy Act Statement

The **Privacy Act of 1974 (P.L. 93-579)** requires that you be given certain information in connection with your submission of the attached form related to a patent application or patent. Accordingly, pursuant to the requirements of the Act, please be advised that: (1) the general authority for the collection of this information is 35 U.S.C. 2(b)(2); (2) furnishing of the information solicited is voluntary; and (3) the principal purpose for which the information is used by the U.S. Patent and Trademark Office is to process and/or examine your submission related to a patent application or patent. If you do not furnish the requested information, the U.S. Patent and Trademark Office may not be able to process and/or examine your submission, which may result in termination of proceedings or abandonment of the application or expiration of the patent.

The information provided by you in this form will be subject to the following routine uses:

1. The information on this form will be treated confidentially to the extent allowed under the Freedom of Information Act (5 U.S.C. 552) and the Privacy Act (5 U.S.C 552a). Records from this system of records may be disclosed to the Department of Justice to determine whether disclosure of these records is required by the Freedom of Information Act.
2. A record from this system of records may be disclosed, as a routine use, in the course of presenting evidence to a court, magistrate, or administrative tribunal, including disclosures to opposing counsel in the course of settlement negotiations.
3. A record in this system of records may be disclosed, as a routine use, to a Member of Congress submitting a request involving an individual, to whom the record pertains, when the individual has requested assistance from the Member with respect to the subject matter of the record.
4. A record in this system of records may be disclosed, as a routine use, to a contractor of the Agency having need for the information in order to perform a contract. Recipients of information shall be required to comply with the requirements of the Privacy Act of 1974, as amended, pursuant to 5 U.S.C. 552a(m).
5. A record related to an International Application filed under the Patent Cooperation Treaty in this system of records may be disclosed, as a routine use, to the International Bureau of the World Intellectual Property Organization, pursuant to the Patent Cooperation Treaty.
6. A record in this system of records may be disclosed, as a routine use, to another federal agency for purposes of National Security review (35 U.S.C. 181) and for review pursuant to the Atomic Energy Act (42 U.S.C. 218(c)).
7. A record from this system of records may be disclosed, as a routine use, to the Administrator, General Services, or his/her designee, during an inspection of records conducted by GSA as part of that agency's responsibility to recommend improvements in records management practices and programs, under authority of 44 U.S.C. 2904 and 2906. Such disclosure shall be made in accordance with the GSA regulations governing inspection of records for this purpose, and any other relevant (*i.e.*, GSA or Commerce) directive. Such disclosure shall not be used to make determinations about individuals.
8. A record from this system of records may be disclosed, as a routine use, to the public after either publication of the application pursuant to 35 U.S.C. 122(b) or issuance of a patent pursuant to 35 U.S.C. 151. Further, a record may be disclosed, subject to the limitations of 37 CFR 1.14, as a routine use, to the public if the record was filed in an application which became abandoned or in which the proceedings were terminated and which application is referenced by either a published application, an application open to public inspection or an issued patent.
9. A record from this system of records may be disclosed, as a routine use, to a Federal, State, or local law enforcement agency, if the USPTO becomes aware of a violation or potential violation of law or regulation.

L435 0017/RAJ
RAJ/gmk

Paper No.:___

IN THE UNITED STATES PATENT & TRADEMARK OFFICE

Inventor(s):	GROTKOWSKI, Miroslaw Marek; MOUSSAKOV, Milen; SHEEHAN, Gregory Bernard; THORNTON, Tom William; FOXALL, Thomas George
Title:	HOLDING CURRENT CIRCUIT FOR PHASE-CUT POWER CONTROL
Serial No.:	12/912613 Confirmation No.: 2383
Filed:	26 October 2010
Art Unit:	2821
Date:	29 July 2011

Commissioner for Patents
P.O. Box 1450
Alexandria, VA 22313-1450

Dear Sir:

STATEMENT OF SPECIAL STATUS FOR THE ELIGIBILITY REQUIREMENT

Dear Sir:

The Applicant claims special status for the invention described in the above-identified patent application on the basis that it materially contributes to the more efficient utilization and conservation of energy resources.

The present invention is related to solid-state light sources, which can be employed in various lighting applications. Solid-state light sources contribute to the more efficient utilization of energy resources via improved efficiency, reduced costs, and lower environmental impact over conventional lighting sources such as incandescent and fluorescent lights. This is recognized by the United States Department of Energy as it has made a "long-term commitment to advance the development and market introduction of energy-efficient white-light sources for general illumination" including solid-state lighting (see http://www1.eere.energy.gov/buildings/ssl/).

The Department of Energy estimates that if conventional light sources were replaced by solid state light sources there would be cost savings of $15 billion per year and a reduction in greenhouse gas emissions of 31.4 million metric tons of carbon by 2030.

The present invention directly contributes to the development of efficient solid-state light sources. The claimed invention relates to solid-state light sources that can replace incandescent and fluorescent light sources that operate with conventional residential and commercial dimming systems. Embodiments of the present invention significantly reduce the requirement for very efficient and low wattage solid-state light sources to draw excess power to operate on conventional types of wall dimmers. This excess power can, in some cases, equal the total power used to emit light and significantly reduce the overall system efficiency. The improved energy efficiency provided by certain embodiments is discussed, for example, in paragraphs [0040], [0053], and [0141]. Such improved energy efficiency may be achieved by minimizing the need to consume excess power to maintain compatibility with existing dimming systems for solid-state light sources.

It is therefore submitted that this application qualifies for special status under the Green Technology Pilot Program.

Respectfully submitted,

By: /RichardAJohnson/

Richard A. Johnson
Registration No. 56,080
tel: 604.669.3432 ext. 9046
fax: 604.681.4081
e-mail: rjohnson@patentable.com

UNITED STATES PATENT AND TRADEMARK OFFICE

UNITED STATES DEPARTMENT OF COMMERCE
United States Patent and Trademark Office
Address: COMMISSIONER FOR PATENTS
P.O. Box 1450
Alexandria, Virginia 22313-1450
www.uspto.gov

APPLICATION NO.	FILING DATE	FIRST NAMED INVENTOR	ATTORNEY DOCKET NO.	CONFIRMATION NO.
12/912,613	10/26/2010	Miroslaw Marek GROTKOWSKI	L435 0017/RAJ/GNM	2383

720 7590 08/19/2011
OYEN, WIGGS, GREEN & MUTALA LLP
480 - THE STATION
601 WEST CORDOVA STREET
VANCOUVER, BC V6B 1G1
CANADA

EXAMINER

ART UNIT	PAPER NUMBER
2821	

NOTIFICATION DATE	DELIVERY MODE
08/19/2011	ELECTRONIC

Please find below and/or attached an Office communication concerning this application or proceeding.

The time period for reply, if any, is set in the attached communication.

Notice of the Office communication was sent electronically on above-indicated "Notification Date" to the following e-mail address(es):

mail@patentable.com

UNITED STATES PATENT AND TRADEMARK OFFICE

Commissioner for Patents
United States Patent and Trademark Office
P.O. Box 1450
Alexandria, VA 22313-1450
www.uspto.gov

OYEN, WIGGS, GREEN & MUTALA LLP
480 - THE STATION
601 WEST CORDOVA STREET
VANCOUVER BC V6B 1G1 CA CANADA

In re Application of	:	
Grotkowski et al.	:	DECISION ON PETITION
Application No. 12912613	:	TO MAKE SPECIAL UNDER
Filed: October 26, 2010	:	THE GREEN TECHNOLOGY
Attorney Docket No. L435 0017/RAJ/GNM	:	PILOT PROGRAM

This is a decision on the petition under 37 CFR 1.102, filed on July 29, 2011, to make the above-identified application special under the pilot program for applications pertaining to Green Technologies as set forth 74 Federal Register Notice 64666 (December 8, 2009) and amended by 75 Federal Register Notice 28554 (May 21, 2010) and 75 Federal Register Notice 69049 (November 10, 2010).

The petition is **GRANTED**.

A grantable petition to make an application special under 37 CFR 1.102 and the pilot program as set forth in 74 FR 64666 must be directed to a nonprovisional application filed under 35 USC 111(a) or be a national stage entry under 35 USC 371, exclusive of any reissue applications.

In order to qualify for special status, the following requirements must be met. 1) The application must have no more than 3 independent claims and no more than 20 total claims. 2) The application must not contain any multiple dependent claims. 3) The petition must state the basis for seeking special status, i.e., the claimed invention either: A) materially enhances the quality of the environment or B) materially contributes to: i) the discovery or development of renewable energy resources, ii) the more efficient utilization and conservation of energy resources, or iii) greenhouse gas emission reduction. 4) If the disclosure is not clear on its face that the claimed invention materially contributes under category (A) or (B), the petition must be accompanied by a statement by the applicant, assignee, or an attorney/agent registered to practice before the Office explaining how the materiality standard is met. 5) A statement that applicant will agree to make an election without traverse in a telephonic interview if a restriction requirement is made by the examiner. 6) The petition to make special must be filed electronically. 7) The petition must be filed at least one day prior to the date that a first Office Action appears in the Patent Application Information Retrieval (PAIR) system. 8) The petition must be accompanied by a request for early publication in compliance with 37 CFR 1.219 and include the publication fee as set forth in 37 CFR 1.18(d).

The requirement for a fee for consideration of the petition to make special for applications pertaining to Green Technologies has been waived.

The instant petition complies with items 1 – 8 above. Accordingly, the above-identified application has been accorded "special" status.

Telephone inquires concerning this decision should be directed to Colleen Dunn at 571-272-1170.

The application is being forwarded to the appropriate Technology Center Art Unit for action on the merits commensurate with this decision.

/Colleen Dunn/

Colleen Dunn
Quality Assurance Specialist
Technology Center 2800

UNITED STATES PATENT AND TRADEMARK OFFICE

Commissioner for Patents
United States Patent and Trademark Office
P.O. Box 1450
Alexandria, VA 22313-1450
www.uspto.gov

SHEPPARD, MULLIN, RICHTER
& HAMPTON LLP
390 LYTTON AVENUE
PALO ALTO, CA 94301

MAILED

APR 05 2011

OFFICE OF PETITIONS

In re Application of	:	
Robert W. Rosentel, et al.	:	
Application No. 12/912,677	:	DECISION ON PETITION
Filed: October 26, 2010	:	TO WITHDRAW
Attorney Docket No. 24803-9	:	FROM RECORD
	:	

This is a decision on the Request to Withdraw as attorney or agent of record under 37 C.F.R. § 1.36(b), filed February 23, 2011.

The request is **NOT APPROVED** because it is moot.

A review of the file record indicates that the power of attorney to Sheppard, Mullin, Richter & Hampton LLP has been revoked by the assignee of the patent application on March 4, 2011. Accordingly, the request to withdraw under 37 C.F.R. § 1.36(b) is moot.

All future communications from the Office will continue to be directed to the below-listed address until otherwise notified by applicant.

Telephone inquires concerning this decision should be directed to Terri Johnson at 571-272-2991.

/Terri Johnson/
Terri Johnson
Petitions Examiner
Office of Petitions

cc: **PATENT DOCKET ADMINISTRATOR**
LOWENSTEIN SANDLER PC
65 LIVINGTON AVENUE
ROSELAND, NJ 07068

IN THE UNITED STATES PATENT AND TRADEMARK OFFICE

APPLICANTS:	Charles Huizenga et al.
APPLICATION NO.:	12/912,717
FILED:	October 26, 2010
EXAMINER:	Unknown
TITLE:	Sensor Interface for Wireless Control
GROUP ART UNIT:	2612
CONF. NO.:	2586
ATTY.DKT.NO.:	PA4783US

MAIL STOP PETITION
COMMISSIONER FOR PATENTS
P.O. BOX 1450
ALEXANDRIA, VA 22313-1450

STATEMENT OF SPECIAL STATUS
IN SUPPORT OF PETITION TO MAKE SPECIAL UNDER THE GREEN TECHNOLOGY PILOT PROGRAM

The Applicants respectfully request that the present application be advanced out of turn for examination (i.e. accelerate examination) through the submission of the present petition. This petition is presented in accordance with 37 C.F.R. § 1.102(c)(2)(ii) and the conditions set forth for such a petition as detailed in MPEP § 708.02(VI), 74 Fed. Reg. 234 (8 Dec. 2009), pp. 64666-64669, 75 Fed. Reg. 98 (21 May 2010), pp. 28554-28555, and 75 Fed. Reg. 217 (10 Nov. 2010), pp. 69049-69050.

I. Requirements and Conditions

1. The present application is a non-reissue, non-provisional utility application filed under 35 U.S.C. § 111(a). In addition, the present application was filed on or after December 8, 2009.

2. The present petition is being filed electronically before December 31, 2011.

3. Based on a review of the status of the application as reflected in the PAIR system, the Applicants believe that no first action has issued as of the date of the present petition.

4. The present petition is accompanied by a request for early publication in compliance with 37 C.F.R. § 1.219 and the publication fee set for in 37 C.F.R. § 18(d).

II. Eligibility under MPEP § 708.02(VI)

MPEP § 708.02(VI) notes that "[t]he U.S. Patent and Trademark Office will, on petition, accord "special" status to all patent applications for inventions which materially contribute to (A) the discovery or development of energy resources, or (B) the more efficient utilization and conservation of energy resources." MPEP § 708.02(VI).

The presently claimed invention is directed towards "a sensor interface for enabling wireless communication with a wired sensor" for wireless control. *Specification* [0002]. The presently claimed invention seeks to address the issue of implementing wireless control to more efficiently use energy. Such use is described as follows:

> [G]rowing concern over environmental responsibility and viability has prompted various measures to reduce energy consumption and ensuing

> costs. In commercial and residential settings, one solution is the use of a sensor for detecting certain environmental conditions and initiating an adjustment of an electrical load device (*i.e.*, electricity-consuming device) in response to the detected condition(s). For example, some building installations (*e.g.*, offices) have installed occupancy sensors to detect motion in a given location. An occupancy sensor wired to a lighting fixture, for example, may detect movement or lack of movement in a particular room and cause the lighting fixture to turn on or off in response. Such sensor may initiate such response by communicating with an actuator or switch of the electrical load device.
>
> Issues with such a scheme may include inflexibility and difficulty and expense associated with retrofitting for changing and/or growing installations. For example, a sensor may have to be rewired when electrical load devices are added, removed, or relocated and when user preferences change. Such situations may require rewiring and reconfiguration of sensor settings to reflect the new arrangement and requirements thereof. While wireless control solutions may allows for increased flexibility, implementing wireless solutions may include installing new wireless sensors, which may be costly for some installations.

Specification, [0003]-[0004]. The present invention may allow for electrical loads to be controlled in a focused, responsive manner, thereby efficiently utilizing electrical energy:

> The present invention provides systems and methods for enabling wireless communication with a wired sensor. These systems and methods may be used to retrofit building installations by adapting pre-existing, wired sensors for wireless communication with wireless control systems. A sensor interface may be communicatively coupled with a sensor that provides information about a detected environmental condition. The sensor interface may wirelessly transmit information received from the sensor to a controller that may control an electrical load device based on the wirelessly transmitted information. Controlling an electrical load device, for example, may allow a building owner or facility manager to adapt to changing conditions and optimize operation of electrical load devices (*e.g.*, lighting, room temperature), thereby reducing waste and energy costs.
>
> FIGURE 1 is a network environment **100** in which may be implemented an exemplary system for enabling wireless communication with a wired sensor.

> The network environment **100** of FIGURE 1 includes communications network **105** and **110**, firewall **115**, gateway **120**, database **125**, administrator station **130**, sensor interface **135**, wired sensor **140**, controller **145**, and electrical load device **150**. Although only a single controller and electrical load device are shown in FIGURE 1, alternative embodiments may include multiple controllers each controlling one or more electrical load devices. The number of sensors, controllers, and electrical load devices may vary for different implementations. Network environment **100** may be implemented among various public or private, indoor or outdoor locations, such as office buildings, retail facilities, restaurants, warehouses, schools, campuses, parks, stadiums, or parking garages.
>
> …
>
> Providing for wireless control allows for more sophisticated controls than were previously possible. For example, the controller **145** may control multiple relays, each exercising individual control over electrical load device (*e.g.*, a lamp in a lighting device with multiple lamps). As such, the controller **145** may individually turn on one, two, three or more lamps in the lighting device. Such individual control allows for stepped lighting levels, which can serve to produce the same result as a dimmer without requiring installation of a dimmer. Providing for stepped lighting levels further allows for conservation of energy in situations where activation of all lights is unnecessary. Presently available systems for stepped lighting (*e.g.*, lacking wireless control) usually involves multiple wall switches, each switch being associated with a different set of lights. Wireless control allows for such stepped lighting without rewiring existing installations of light.

Specification, [0016], [0017] and [0041].

The Applicants therefore believe that the present application materially contributes to "(B) the more efficient utilization and conservation of energy resources" and is thus eligible for special status.

III. Conclusion

The Applicants believe that this Petition to Make Special has met all requirements set forth by 37 C.F.R. § 1.102(c)(2)(ii), MPEP § 708.02(VI), 74 Fed. Reg. 234 (8 Dec. 2009), pp. 64666-64669, 75 Fed. Reg. 98 (21 May 2010), pp. 28554-28555, and 75 Fed. Reg. 217 (10 Nov. 2010), pp. 69049-69050. The Applicants therefore respectfully request that the petition be granted.

Respectfully submitted,
Charles Huizenga et al.

February 10, 2011

By: /Stephanie Gehling/

Stephanie L. Gehling, Reg. No. 65,801
Carr & Ferrell *LLP*
120 Constitution Drive
Menlo Park, California 94025
Phone (650) 812-3400
Fax (650) 812-3444

Doc Code: PET.GREEN
Document Description: Petition for Green Tech Pilot

PTO/SB/420 (12-09)
Approved for use through 05/31/2010. OMB 0651-0062
U.S. Patent and Trademark Office; U. S. DEPARTMENT OF COMMERCE
Under the Paperwork Reduction Act of 1995, no persons are required to respond to a collection of information unless it displays a valid OMB control number.

PETITION TO MAKE SPECIAL UNDER THE GREEN TECHNOLOGY PILOT PROGRAM

Attorney Docket Number: PA4783US	Application Number (if known): 12/912,717	Filing date: October 26, 2010

First Named Inventor: Charles Huizenga

Title: Sensor Interface for Wireless Control

APPLICANT HEREBY REQUESTS TO PARTICIPATE IN THE GREEN TECHNOLOGY PILOT PROGRAM FOR THE ABOVE-IDENTIFIED APPLICATION. See Instruction Sheet on page 2.

This petition must be timely filed electronically using the USPTO electronic filing system, EFS-Web.

1. By filing this petition:

   Applicant is requesting early publication: Applicant hereby requests early publication under 37 CFR 1.219 and the publication fee set forth in 37 CFR 1.18(d) accompanies this request. Applicant hereby rescinds under 37 CFR 1.213(b) any previous filed request that the above-identified application not be published under 35 U.S.C. 122(b).

   If the application has been published, the petition must still be accompanied by the publication fee set forth in 37 CFR 1.18(d) and a statement that the application has been published.

2. By filing this petition: applicant is agreeing to make an election without traverse in a telephonic interview and elect an invention that meets the eligibility requirement and classification requirement set forth in the notice entitled "Pilot Program for Green Technologies Including Greenhouse Gas Reduction" that was published in the Federal Register if the Office determines that the claims are not obviously directed to a single invention.

3. This request is accompanied by statements of special status for the eligibility requirement.

4. The application contains no more than three (3) independent claims and twenty (20) total claims.

5. The application does not contain any multiple dependent claims.

6. Other attachments: _____

Signature /Stephanie Gehling/	Date February 10, 2011
Name (Print/Typed) Stephanie Gehling	Registration Number 65,801

***Note**: Signatures of all the inventors or assignees of record of the entire interest or their representative(s) are required in accordance with 37 CFR 1.33 and 11.18. Please see 37 CFR 1.4(d) for the form of the signature. If necessary, submit multiple forms for more than one signature, see below*.*

☐ *Total of 1 forms are submitted.

The information is required to obtain or retain a benefit by the public which is to file (and by the USPTO to process) an application. Confidentiality is governed by 35 U.S.C. 122 and 37 CFR 1.11 and 1.14. This collection is estimated to take 12 hours to complete, including gathering, preparing, and submitting the completed application form to the USPTO. Time will vary depending upon the individual case. Any comments on the amount of time you require to complete this form and/or suggestions for reducing this burden, should be sent to the Chief Information Officer, U.S. Patent and Trademark Office, U.S. Department of Commerce, P.O. Box 1450, Alexandria, VA 22313-1450. DO NOT SEND FEES OR COMPLETED FORMS TO THIS ADDRESS. **SEND TO: Commissioner for Patents, P.O. Box 1450, Alexandria, VA 22313-1450.**

If you need assistance in completing the form, call 1-800-PTO-9199 and select option 2.

UNITED STATES PATENT AND TRADEMARK OFFICE

UNITED STATES DEPARTMENT OF COMMERCE
United States Patent and Trademark Office
Address: COMMISSIONER FOR PATENTS
P.O. Box 1450
Alexandria, Virginia 22313-1450
www.uspto.gov

APPLICATION NO.	FILING DATE	FIRST NAMED INVENTOR	ATTORNEY DOCKET NO.	CONFIRMATION NO.
12/912,717	10/26/2010	Charles Huizenga	PA4783US	2586

22830 7590 02/26/2011
CARR & FERRELL LLP
120 CONSTITUTION DRIVE
MENLO PARK, CA 94025

EXAMINER

ART UNIT	PAPER NUMBER
2121	

MAIL DATE	DELIVERY MODE
02/26/2011	PAPER

Please find below and/or attached an Office communication concerning this application or proceeding.

The time period for reply, if any, is set in the attached communication.

UNITED STATES PATENT AND TRADEMARK OFFICE

Commissioner for Patents
United States Patent and Trademark Office
P.O. Box 1450
Alexandria, VA 22313-1450
www.uspto.gov

CARR & FERRELL LLP
120 CONSTITUTION DRIVE
MENLO PARK CA 94025

In re Application of	:	
HUIZENGA, Charles et al.	:	DECISION ON PETITION
Application No. 12/912,717	:	TO MAKE SPECIAL UNDER
Filed: October 26, 2010	:	THE GREEN TECHNOLOGY
Attorney Docket No. **PA4783US**	:	PILOT PROGRAM

This is a decision on the petition under 37 CFR 1.102, filed February 10, 2011, to make the above-identified application special under the pilot program for applications pertaining to Green Technologies as set forth in 74 Federal Register Notice 64666 (December 8, 2009) and amended by 75 Federal Register Notice 28554 (May 21, 2010) and 75 Federal Register Notice 69049 (November 10, 2010).

The petition is **GRANTED**.

A grantable petition to make an application special under 37 CFR 1.102 and the pilot program as set forth in 74 FR 64666 must be directed to a nonprovisional application filed under 35 USC 111(a) or be a national stage entry under 35 USC 371, exclusive of any reissue applications.

In order to qualify for special status, the following requirements must be met. 1) The application must have no more than 3 independent claims and no more than 20 total claims. 2) The application must not contain any multiple dependent claims. 3) The petition must state the basis for seeking special status, i.e., the claimed invention either: A) materially enhances the quality of the environment or B) materially contributes to: i) the discovery or development of renewable energy resources, ii) the more efficient utilization and conservation of energy resources, or iii) greenhouse gas emission reduction. 4) If the disclosure is not clear on its face that the claimed invention materially contributes under category (A) or (B), the petition must be accompanied by a statement by the applicant, assignee, or an attorney/agent registered to practice before the Office explaining how the materiality standard is met. 5) A statement that applicant will agree to make an election without traverse in a telephonic interview if a restriction requirement is made by the examiner. 6) The petition to make special must be filed electronically. 7) The petition must be filed at least one day prior to the date that a first Office Action appears in the Patent Application Information Retrieval (PAIR) system. 8) The petition must be accompanied by a

request for early publication in compliance with 37 CFR 1.219 and include the publication fee as set forth in 37 CFR 1.18(d).

The requirement for a fee for consideration of the petition to make special for applications pertaining to Green Technologies has been waived.

The instant petition complies with items 1 – 8 above. Accordingly, the above-identified application has been accorded "special" status.

The application is being forwarded to the Technology Center Art Unit 2121 for action on the merits commensurate with this decision.

Telephone inquires concerning this decision should be directed to Eddie C. Lee at 571-272-1732.

/Eddie C. Lee/

Eddie C. Lee
Quality Assurance Specialist
Technology Center 2100

UNITED STATES PATENT AND TRADEMARK OFFICE

UNITED STATES DEPARTMENT OF COMMERCE
United States Patent and Trademark Office
Address: COMMISSIONER FOR PATENTS
P.O. Box 1450
Alexandria, Virginia 22313-1450
www.uspto.gov

APPLICATION NO.	FILING DATE	FIRST NAMED INVENTOR	ATTORNEY DOCKET NO.	CONFIRMATION NO.
12/912,788		Scott Schneider	2009057-US2	2703

69289 7590 11/02/2010
COLOPLAST A/S
Attention: Corporate Patents
Holtedam 1
DK-3050 Humlebaek,
DENMARK

EXAMINER

ART UNIT	PAPER NUMBER
3773	

NOTIFICATION DATE	DELIVERY MODE
11/02/2010	ELECTRONIC

Please find below and/or attached an Office communication concerning this application or proceeding.

The time period for reply, if any, is set in the attached communication.

Notice of the Office communication was sent electronically on above-indicated "Notification Date" to the following e-mail address(es):

patent@coloplast.com
dkbvd@coloplast.com

UNITED STATES PATENT AND TRADEMARK OFFICE

Commissioner for Patents
United States Patent and Trademark Office
P.O. Box 1450
Alexandria, VA 22313-1450
www.uspto.gov

COLOPLAST A/S
Attention: Corporate Patents
Holtedam 1
DK-3050 Humlebaek DK DENMARK

In re Application of	:	
SCHNEIDER, SCOTT et al	:	DECISION ON REQUEST TO
Application No. 12/912,788	:	PARTICIPATE IN PATENT
Filed: Oct. 27, 2010	:	PROSECUTION HIGHWAY
Attorney Docket No. 2010057-US2	:	PILOT PROGRAM AND PETITION
For: DIGITAL SUTURE FIXATION	:	TO MAKE SPECIAL UNDER
SYSTEM	:	37 CFR 1.102(d)

This is a decision on the renewed request to participate in the Patent Prosecution Highway (PPH) pilot program under 37 CFR 1.102(d), filed October 27, 2010, to make the above-identified application special.

The request and petition are GRANTED.

A grantable request to participate in the PPH pilot program and petition to make special require:

(1) The U.S. application must validly claim priority under 35 U.S.C. 119(a) to one or more applications filed in the DKPTO;
(2) Applicant must submit a copy of the allowable/patentable claim(s) from the DKPTO application(s);
(3) All the claims in the U.S. application must sufficiently correspond or be amended to sufficiently correspond to the allowable/patentable claim(s) in the DKPTO application(s);
(4) Examination of the U.S. application has not begun;
(5) Applicant must submit a copy of all the office actions from each of the DKPTO application(s) containing the allowable/patentable claim(s); and
(6) Applicant must submit an IDS listing the documents cited by the DKPTO examiner in the DKPTO office action along with copies of documents except U.S. patents or U.S. patent application publications.

The request to participate in the PPH pilot program and petition comply with the above requirements. Receipt of the IDS statement is acknowledged. Accordingly, the above-identified application has been accorded "special" status.

Telephone inquiries concerning this decision should be directed to Henry C. Yuen, at 571-272-4856.

All other inquiries concerning the examination or status of the application should be directed to Jackie Ho, SPE of Art Unit 3773 and 571-272-4696.

The application is undergoing pre-examination processing. Once it is released for examination, the application will be forwarded to the examiner for action on the merits commensurate with this decision. The applicant is reminded that the foreign priority claim must be perfected during the course of the examination.

Petition is **granted**.

/Henry C. Yuen/

Henry C. Yuen, Special Programs Examiner
Technology Center 3700 – Mechanical Engineering,
Manufacturing and Products
571-272-4856

UNITED STATES PATENT AND TRADEMARK OFFICE

Commissioner for Patents
United States Patent and Trademark Office
P.O. Box 1450
Alexandria, VA 22313-1450
www.uspto.gov

Raj Abhyanker, P.C.
1580 W. El Camino Real, Suite 8
Mountain View CA 94040

MAILED
JUL 06 2011
OFFICE OF PETITIONS

In re Application of	:	
Jonathan Byrn	:	
Application No. 12/912,791	:	DECISION ON PETITION
Filed: October 27, 2010	:	
Attorney Docket No. 05-0786-1D	:	

This is a decision on the petition under the unintentional provisions of 37 CFR 1.137(b), filed June 13, 2011, to revive the above-identified application.

The petition is **GRANTED**.

This application became abandoned for failure to timely pay the issue and publication fees on or before June 18, 2011, as required by the Notice of Allowance and Fee(s) Due, mailed February 18, 2011. Accordingly, the date of abandonment of this application is June 19, 2011. The Notice of Abandonment was mailed June 9, 2011.

The petition satisfies the requirements of 37 CFR 1.137(b) in that petitioner has supplied (1) the reply in the form of payment of the issue fee of $1,510 and the publication fee of $300, (2) the petition fee of $1,620; and (3) a proper statement of unintentional delay.

Telephone inquiries concerning this decision should be directed to Terri Johnson at (571) 272-2991.

This application is being referred to Office of Data Management for processing into a patent.

/Terri Johnson/
Terri Johnson
Petitions Examiner
Office of Petitions

UNITED STATES PATENT AND TRADEMARK OFFICE

UNITED STATES DEPARTMENT OF COMMERCE
United States Patent and Trademark Office
Address: COMMISSIONER FOR PATENTS
P.O. Box 1450
Alexandria, Virginia 22313-1450
www.uspto.gov

APPLICATION NO.	FILING DATE	FIRST NAMED INVENTOR	ATTORNEY DOCKET NO.	CONFIRMATION NO.
12/912,809	10/27/2010	DROR SELIKTAR	49940	2752

67801 7590 11/08/2010
MARTIN D. MOYNIHAN d/b/a PRTSI, INC.
P.O. BOX 16446
ARLINGTON, VA 22215

EXAMINER

ART UNIT	PAPER NUMBER
1656	

MAIL DATE	DELIVERY MODE
11/08/2010	PAPER

Please find below and/or attached an Office communication concerning this application or proceeding.

The time period for reply, if any, is set in the attached communication.

UNITED STATES PATENT AND TRADEMARK OFFICE

Commissioner for Patents
United States Patent and Trademark Office
P.O. Box 1450
Alexandria, VA 22313-1450
www.uspto.gov

NOV 0 8 2010

MARTIN D. MOYNIHAN d/b/a PRTSI, INC.
P.O. BOX 16446
ARLINGTON VA 22215

In re Application of	:
Seliktar et al.	:
Serial No.: 12/912,809	: PETITION DECISION
Filed: October 27, 2010	:
Attorney Docket No.: **49940**	:

This is a decision on the PETITION FOR ACCEPTANCE OF COLOR DRAWINGS UNDER 37 CFR 1.84(a)(2). The petition was filed October 27, 2010. Entry of color drawings requires: 1) three sets of the color drawings, 2) a proper amendment to the specification indicating color photographs or drawings are present in the file, and 3) the required fee of $130.00 under 37 CFR 1.17(h).

A review of the application record indicates that the petition fails to meet all of the requirements for acceptance of color drawings. Specifically, three set of color drawings were not provided.

The petition is **DENIED**.

Any new or renewed petition must be filed within TWO MONTHS of the mail date of this decision.

Should there be any questions with respect to this decision, please contact Marianne C. Seidel, by mail addressed to: Director, Technology Center 1600, at the address listed above, or by telephone at 571-272-0584or by facsimile transmission at 571-273-8300.

Marianne C. Seidel
Quality Assurance Specialist
Technology Center 1600

Doc Code: PET.GREEN
Document Description: Petition for Green Tech Pilot

PTO/SB/420 (03-11)

PETITION TO MAKE SPECIAL UNDER THE GREEN TECHNOLOGY PILOT PROGRAM

Attorney Docket Number: 245026	Application Number (if known): 12/912,871	Filing date: 10/27/2010

First Named Inventor: Joseph Mark Brian

Title: ENERGY MANAGEMENT SYSTEM INCORPORATING A GAS POWERED GENERATOR

APPLICANT HEREBY REQUESTS TO PARTICIPATE IN THE GREEN TECHNOLOGY PILOT PROGRAM FOR THE ABOVE-IDENTIFIED APPLICATION. See Instruction Sheet on page 2.

This petition must be timely filed electronically using the USPTO electronic filing system, EFS-Web.

1. By filing this petition:

   Applicant is requesting early publication: Applicant hereby requests early publication under 37 CFR 1.219 and the publication fee set forth in 37 CFR 1.18(d) accompanies this request.

2. By filing this petition: applicant is agreeing to make an election without traverse in a telephonic interview and elect an invention that meets the eligibility requirements for the Green Technology Pilot Program, if the Office determines that the claims are not obviously directed to a single invention. See Instruction Sheet.

3. This request is accompanied by statements of special status for the eligibility requirement.

4. The application contains no more than three (3) independent claims and twenty (20) total claims.

5. The application does not contain any multiple dependent claims.

6. Other attachments: Statement Concerning the Basis for the Special Status

Signature /Allison W. Mages/	Date 11/28/11
Name (Print/Typed) Allison W. Mages	Registration Number 57,275

Note: Signatures of all the inventors or assignees of record of the entire interest or their representative(s) are required in accordance with 37 CFR 1.33 and 11.18. Please see 37 CFR 1.4(d) for the form of the signature. If necessary, submit multiple forms for more than one signature, see below.*

☐ *Total of _____ forms are submitted.

If you need assistance in completing the form, call 1-800-PTO-9199 and select option 2.

IN THE UNITED STATES PATENT AND TRADEMARK OFFICE

First Named Inventor: Joseph Mark Brian	)
Confirmation No.: 2847	)
	)
Serial No.: 12/912,871	)
	)
Filing Date: 10/27/2010	)
	)
Atty Docket No.: 245026	)

VIA EFS
Commissioner for Patents
P.O. Box 1450
Alexandria, VA 22313-1450

Statement Concerning the Basis for the Special Status

SIR:

This disclosure relates to an energy management system and more particularly to the management of devices in an energy management system. The disclosure finds particular application to incorporating an emergency power device, such as a generator, in energy management platforms. (See [0001]).

Many utilities are currently experiencing a shortage of electric generating capacity due to increasing consumer demand for electricity. Currently utilities charge a flat rate, but with increasing cost of fuel prices and high energy usage at certain parts of the day, utilities have to buy more energy to supply customers during peak demand. Lowering peak demand provides a huge cost savings and lessens the peak load that the utility has to accommodate. In order to reduce high peak power demand, many utilities have instituted time of use (TOU) metering and rates which include higher rates for energy usage during on-peak times and lower rates for energy usage during off-peak times. As a result,

consumers are provided with an incentive to use electricity at off-peak times rather than on-peak times and to reduce overall energy consumption of appliances at all times. (See [0002]).

Home energy management systems have been developed that can automatically operate and disable power consuming devices in a designated home network in response to signals received from a utility. An exemplary system includes a central controller that is in communication with each of the power consuming devices and provides a homeowner the means to monitor and manage their energy consumption through a combination of behavior modification and programmed control logic. Active and real time communication of energy costs of power consuming devices to the consumer enables informed choices for operating those power consuming functions. (See [0003]).

The home energy management system is designed to manage the operation of power consuming devices in a home network and provide homeowners with power and cost saving information. It would be advantageous, however, to further include additional devices into the system, such as an emergency power device, and enable users to obtain information regarding the device that would be relevant in operating, not only the emergency power device, but also the energy management system as a whole. It would be particularly advantageous to obtain such information using the hardware already in place with the home energy management system. (See [0004]).

In one aspect of the present disclosure, an energy management system for a home network is provided. The energy management system comprises one

or more power consuming devices and a central controller having a memory and a communication module. The controller is operationally connected to the power consuming devices. The energy management system further includes a user interface capable of providing energy data to a user, and an emergency power device provided with a communication device communicatively linked to the communication module, such that information relating to the emergency power device may be transmitted by one of the communication device and communication module, and received by the other of the communication device and communication module. (See [0005]).

In another aspect of the present disclosure, a method for providing information from an emergency power device to a central controller of an energy management system that includes at least one power consuming device and a central controller having a memory and a communication module operationally connected to the at least one power consuming device is provided. The method comprises establishing a communication path between an emergency power device and the central controller, transmitting real-time information from the emergency power device to the central controller, receiving the information into the central controller, and displaying the information to a user through a user interface. (See [0006]).

In yet another aspect of the present disclosure, an energy management system is provided comprising a network of energy consuming devices operationally connected to a controller. The system includes a power generator including a communication device and microprocessor, and a central controller

comprising a communication module, wherein the microprocessor is capable of processing real-time information with respect to the generator and said communication device is configured to transmit the real-time information to the communication module of the central controller. (See [0007]).

Accordingly, Applicant respectfully submits that Special Status is sought on the basis that the embodiments disclosed herein materially contribute to the more efficient utilization and conservation of energy resources. Said embodiments provide for more efficient control of the operation of accessories in a home energy management system which manages a plurality of communication networks. Amongst several benefits, said embodiments allow for greater informational awareness and control of energy flow, which has been shown to encourage reductions in energy consumption, and results in greater energy efficiency on the part of consumers and utilities.

The undersigned representative may be contacted at the number below to facilitate the resolution of any matters. Please charge any fees that are incurred in connection with this Statement to deposit account no. 09-0470.

Respectfully submitted,

General Electric Company

By : /Allison W. Mages/
Allison W. Mages
Reg. No. 57,275

Dated: November 28, 2011
GE Global Patent Operation
2 Corporate Drive, Suite 648
Shelton, CT 06484
203-944-6730

UNITED STATES PATENT AND TRADEMARK OFFICE

UNITED STATES DEPARTMENT OF COMMERCE
United States Patent and Trademark Office
Address: COMMISSIONER FOR PATENTS
P.O. Box 1450
Alexandria, Virginia 22313-1450
www.uspto.gov

APPLICATION NO.	FILING DATE	FIRST NAMED INVENTOR	ATTORNEY DOCKET NO.	CONFIRMATION NO.
12/912,871	10/27/2010	Joseph Mark Brian	245026 (GECZ 201118US01)	2847

27885 7590 12/21/2011
FAY SHARPE LLP
1228 Euclid Avenue, 5th Floor
The Halle Building
Cleveland, OH 44115

EXAMINER
DECADY, ALBERT

ART UNIT	PAPER NUMBER
2121	

MAIL DATE	DELIVERY MODE
12/21/2011	PAPER

Please find below and/or attached an Office communication concerning this application or proceeding.

The time period for reply, if any, is set in the attached communication.

UNITED STATES PATENT AND TRADEMARK OFFICE

Commissioner for Patents
United States Patent and Trademark Office
P.O. Box 1450
Alexandria, VA 22313-1450
www.uspto.gov

FAY SHARPE LLP
1228 Euclid Avenue, 5th Floor
The Halle Building
Cleveland OH 44115

In re Application of	:	
BRIAN, Joseph et al.	:	**DECISION ON PETITION**
Application No. 12/912,871	:	**TO MAKE SPECIAL UNDER**
Filed: October 27, 2010	:	**THE GREEN TECHNOLOGY**
For: **ENERGY MANAGEMENT SYSTEM INCORPORATING A GAS POWERED GENERATOR**	:	**PILOT PROGRAM**

The petition filed November 28, 2011 has been treated as a petition under 37 CFR 1.102 to make the above-identified application special under the pilot program for applications pertaining to Green Technologies as set forth in 74 Federal Register Notice 64666 (December 8, 2009) and amended by 75 Federal Register Notice 28554 (May 21, 2010).

The petition is **DISMISSED**.

If reconsideration of this decision is desired, a petition for reconsideration must be filed within ONE (1) MONTH OR THIRTY (30) DAYS from the mail date of this decision, whichever is longer. No extension of this time limit can be granted under 37 CFR 1.136(a) or (b). The petition for reconsideration should include an exhaustive attempt to provide the lacking item(s) noted below, since, after a decision on the petition for reconsideration, no further reconsideration or review of the matter will be undertaken by the Director.

A grantable petition to make an application special under 37 CFR 1.102 and the pilot program as set forth in 74 FR 64666 must be directed to a nonprovisional application filed under 35 USC 111(a) or be a national stage entry under 35 USC 371, exclusive of any reissue applications and be filed prior to the date of the notice, December 8, 2009.

In order to qualify for special status, the following requirements must be met. 1) The application must have no more than 3 independent claims and no more than 20 total claims. 2) The application must not contain any multiple dependent claims. 3) The petition must state the basis for seeking special status, i.e., the claimed invention either: A) materially enhances the quality of the environment or B) materially contributes to: i) the discovery or development of renewable energy resources, ii) the more efficient utilization and conservation of energy resources, or iii) greenhouse gas emission reduction. 4) If the disclosure is not clear on its face that the claimed

invention materially contributes under category (A) or (B), the petition must be accompanied by a statement by the applicant, assignee, or an attorney/agent registered to practice before the Office explaining how the materiality standard is met. 5) A statement that applicant will agree to make an election without traverse in a telephonic interview if a restriction requirement is made by the examiner. 6) The petition to make special must be filed electronically. 7) The petition must be filed at least one day prior to the date that a first Office Action appears in the Patent Application Information Retrieval (PAIR) system. 8) The petition must be accompanied by a request for early publication in compliance with 37 CFR 1.219 and include the publication fee as set forth in 37 CFR 1.18(d).

The requirement for a fee for consideration of the petition to make special for applications pertaining to Green Technologies has been waived.

The petition lacks item(s) 4 above for the reasons explained in more detail below.

In the "Statement Concerning the Basis for the Special Status," petitioner states that "home energy management system is designed to manage the operation of power consuming devices in a home network and provide homeowners with power and cost saving information. It would be advantageous, however, to further include additional devices into the system, such as an emergency power device, and enable users to obtain information regarding the device that would be relevant in operating, not only the emergency power device, but also the energy management system as a whole. It would be particularly advantageous to obtain such information using the hardware already in place with the home energy management system. (See [0004])." The "Statement" goes on to further describe other aspects of the invention. However, these statements fail to "explain[ ] how the materiality standard is met." Since the "disclosure is not clear on its face that the claimed invention contributes under category (A) or (B)," applicant is required to provide a more detail "[explanation] of how the materiality standard is met." This is because the claimed invention includes "a gas-powered generator" which do not utilize renewable energy resources, reduce greenhouse gas emission or regarded as an efficient source of energy. Furthermore, any request for reconsideration will be reviewed pursuant to Section II of the Pilot Program for Green Technologies as set forth in 74 Federal Register Notice 64666, which specifies that "materiality standard does not permit an applicant to speculate as to how a hypothetical end-user might specially apply the invention in a manner that could materially enhance the quality of the environment. Nor dies such standard permit an applicant to enjoy the benefit of advanced examination merely because some minor aspect of the claimed invention may enhance the quality of the environment."

Any reconsideration of this decision should be submitted through the USPTO electronic filing system, EFS-Web, and selecting the document description of "Petition for Green Tech Pilot" on the EFS-Web screen.

Any inquiry regarding this decision should be directed to Eddie C. Lee at (571) 272 - 1732.

/Eddie C. Lee/

Eddie C. Lee
Quality Assurance Specialist, TC 2100

IN THE UNITED STATES PATENT AND TRADEMARK OFFICE

First Named Inventor: Joseph Mark BRIAN	)
Confirmation No.: 2847	)
	)
Serial No.: 12/912,871	)
	)
Filing Date: 10-27-2010	)
	)
Atty Docket No.: 245026-1 (GECZ 201118US01)	)

Commissioner for Patents
P.O. Box 1450
Alexandria, VA 22313-1450

Request for Reconsideration

SIR:

This is responsive to the Decision on Petition, dated as mailed 21 December 2011, in the above-referenced application.

Applicant respectfully requests reconsideration of Applicant's Petition to Make Special on the basis that the present invention materially contributes to energy conservation.

The Decision to Make Special Under the Green Technology Pilot Program (hereinafter "the Decision") states that it is not agreed that the application on its face meets the materiality standard. The Decision alleges that the claimed invention includes a gas-powered generator which does not utilize renewable energy resources, reduce greenhouse gas emission or regarded as an efficient source of energy. The Decision also implies that Applicant speculates as to how a hypothetical end-user might specially apply the invention in a manner that could materially enhance the quality of the environment. Applicant does not agree with the comments made in the Decision.

Applicant respectfully submits that embodiments of the present invention relate to an energy management system and more particularly to the management of devices in an energy management system. The disclosure finds particular application to incorporating an emergency power device, such as a generator, in energy management platforms. (see at least paragraph [0001]).

Smart technology generally relates to a class of technology that uses computer-based remote control and automation. These systems are made possible by two-way communication technology and computer processing and offer many benefits to utilities and consumers; mostly seen in big improvements in energy efficiency. Amongst several benefits, smart energy technologies allow for greater informational awareness and control of energy flow. This informational awareness allows consumers to interface with their energy consumption, providing new levels of detail on how, and how much, electricity is being consumed and at what cost in real time, and give them the tools to increase or decrease their consumption. It also allows utilities to more efficiently manage and adjust electricity transmission, reducing the likelihood of outages and congestion while improving billing accuracy for consumers. Smart energy generally provides consumers and utilities a greater ability to adapt to changing market conditions for greater energy efficiency. ("Smart Grid", Office of Electricity Delivery & Energy Reliability. 2011. Web. 28 July 2011).

Many utilities are currently experiencing a shortage of electric generating capacity due to increasing consumer demand for electricity. Currently utilities charge a flat rate, but with increasing cost of fuel prices and high energy usage at

certain parts of the day, utilities have to buy more energy to supply customers during peak demand. Lowering peak demand provides a huge cost savings and lessens the peak load that the utility has to accommodate. In order to reduce high peak power demand, many utilities have instituted time of use (TOU) metering and rates which include higher rates for energy usage during on-peak times and lower rates for energy usage during off-peak times. As a result, consumers are provided with an incentive to use electricity at off-peak times rather than on-peak times and to reduce overall energy consumption of appliances at all times. (see at least paragraph [0002]).

A home energy management system may include a central controller that is in communication with each of the power consuming devices and provides a homeowner the means to monitor and manage their energy consumption through a combination of behavior modification and programmed control logic. Active and real time communication of energy costs of power consuming devices to the consumer enables informed choices for operating those power consuming functions. (see at least paragraph [0003]).

The home energy management system is designed to manage the operation of power consuming devices in a home network and provide homeowners with power and cost saving information. It would be advantageous, however, to further include additional devices into the system, such as an emergency power device, and enable users to obtain information regarding the device that would be relevant in operating, not only the emergency power device, but also the energy management system as a whole. It would be particularly

advantageous to obtain such information using the hardware already in place with the home energy management system. (see at least paragraph [0004]).

As briefly described above, the home energy management system is an electrical system having a central controller operationally coupled to a home network of power consuming devices that provides a homeowner the means to monitor and manage their energy consumption through a combination of behavior modification and programmed control logic. The central controller provides real-time feedback on electricity, water, and natural gas consumption as well as providing data on renewable energy generation occurring at the home, such as solar photovoltaic generation, wind generation, or any other type of renewable energy generation. (see at least paragraph [0012]). The central controller also stores consumption data and provides data to a user via an associated user interface display. (see at least paragraph [0013]).

Based on the information presented to a homeowner via the user interface on the display or through a client application on to a user via a client device, a homeowner can make informed choices on usage and maintenance of the generator along with choices regarding the energy management system itself. (see at least paragraph [0024]).

The embodiments disclosed in the present application provide a user with the information necessary to make informed choices on energy usage. Amongst several benefits, embodiments of the present invention allow for greater informational awareness and control of energy flow, which has been shown to encourage reductions in energy consumption, and results in greater energy

efficiency on the part of consumers and utilities. As such, the present invention promotes the more efficient utilization of and conservation of energy.

The undersigned attorney may be contacted at the number below to facilitate the resolution of any matters. Please charge any fees that are incurred in connection with this Statement to deposit account no. 09-0470.

Respectfully submitted,

General Electric Company

By : /Allison W Mages/
Allison Weiner Mages
Reg. No. 57,275

Dated: January 20, 2012

GE Global Patent Operation
2 Corporate Drive, Suite 648
Shelton, CT 06484
203-944-6730

UNITED STATES PATENT AND TRADEMARK OFFICE

UNITED STATES DEPARTMENT OF COMMERCE
United States Patent and Trademark Office
Address: COMMISSIONER FOR PATENTS
P.O. Box 1450
Alexandria, Virginia 22313-1450
www.uspto.gov

APPLICATION NO.	FILING DATE	FIRST NAMED INVENTOR	ATTORNEY DOCKET NO.	CONFIRMATION NO.
12/912,871	10/27/2010	Joseph Mark Brian	245026 (GECZ 201118US01)	2847

27885 7590 01/30/2012
FAY SHARPE LLP
1228 Euclid Avenue, 5th Floor
The Halle Building
Cleveland, OH 44115

EXAMINER
DECADY, ALBERT

ART UNIT	PAPER NUMBER
2121	

MAIL DATE	DELIVERY MODE
01/30/2012	PAPER

Please find below and/or attached an Office communication concerning this application or proceeding.

The time period for reply, if any, is set in the attached communication.

UNITED STATES PATENT AND TRADEMARK OFFICE

Commissioner for Patents
United States Patent and Trademark Office
P.O. Box 1450
Alexandria, VA 22313-1450
www.uspto.gov

FAY SHARPE LLP
1228 Euclid Avenue, 5th Floor
The Halle Building
Cleveland OH 44115

1/30/12

In re Application of	:	
Joseph M. Brian et al.	:	DECISION ON PETITION
Application No. 12/912,871	:	TO MAKE SPECIAL UNDER
Filed: October 27, 2010	:	THE GREEN TECHNOLOGY
Attorney Docket No. 245026 (GECZ 201118US01)	:	PILOT PROGRAM

This is a decision on the petition under 37 CFR 1.102, filed January 20, 2012, to make the above-identified application special under the pilot program for applications pertaining to Green Technologies as set forth in 74 Federal Register Notice 64666 (December 8, 2009) and amended by 75 Federal Register Notice 28554 (May 21, 2010), 75 Federal Register Notice 69049 (November 10, 2010) and 76 Federal Register Notice 77979 (December 15, 2011).

The petition is **GRANTED**.

A grantable petition to make an application special under 37 CFR 1.102 and the pilot program as set forth in 74 FR 64666 must be directed to a nonprovisional application filed under 35 USC 111(a) or be a national stage entry under 35 USC 371, exclusive of any reissue applications.

In order to qualify for special status, the following requirements must be met. 1) The application must have no more than 3 independent claims and no more than 20 total claims. 2) The application must not contain any multiple dependent claims. 3) The petition must state the basis for seeking special status, i.e., the claimed invention either: A) materially enhances the quality of the environment or B) materially contributes to: i) the discovery or development of renewable energy resources, ii) the more efficient utilization and conservation of energy resources, or iii) greenhouse gas emission reduction. 4) If the disclosure is not clear on its face that the claimed invention materially contributes under category (A) or (B), the petition must be accompanied by a statement by the applicant, assignee, or an attorney/agent registered to practice before the Office explaining how the materiality standard is met. 5) A statement that applicant will agree to make an election without traverse in a telephonic interview if a restriction requirement is made by the examiner. 6) The petition to make special must be filed electronically. 7) The petition must be filed at least one day prior to the date that a first Office Action appears in the Patent Application Information Retrieval (PAIR) system. 8) The petition must be accompanied by a request for early publication in compliance with 37 CFR 1.219 and include the publication fee as set forth in 37 CFR 1.18(d).

The requirement for a fee for consideration of the petition to make special for applications pertaining to Green Technologies has been waived.

The instant petition complies with items 1 – 8 above. Accordingly, the above-identified application has been accorded "special" status.

Telephone inquires concerning this decision should be directed to Blaine Copenheaver at 571-272-1156.

/Blaine Copenheaver/

Blaine Copenheaver
Quality Assurance Specialist
Technology Center 1700

UNITED STATES PATENT AND TRADEMARK OFFICE

Commissioner for Patents
United States Patent and Trademark Office
P.O. Box 1450
Alexandria, VA 22313-1450
www.uspto.gov

Roy Kiesel Ford Doody & Thurmon
9100 Bluebonnet Centre Blvd, Suite 100
BATON ROUGE LA 70809

MAILED

AUG 24 2011

OFFICE OF PETITIONS

In re Application of	:	
Eduardo Fonseca	:	
Application No. 12/912,911	:	DECISION ON PETITION
Filed: October 27, 2010	:	TO WITHDRAW
Attorney Docket No. 11895.001	:	FROM RECORD
	:	

This is a decision on the Request to Withdraw as attorney or agent of record under 37 C.F.R. § 1.36(b), filed August 11, 2011.

The request is **NOT APPROVED.**

The Office will no longer accept address changes to a new practitioner or law firm filed with a Request, absent the filing of a power of attorney to the new representative. The Office will either change the correspondence address of record to the most current address information provided for the assignee of the entire interest who properly became of record under 37 CFR 3.71 or, if no assignee of the entire interest has properly been made of record under 37 CFR 3.71, the most current address information provided for the first named inventor.

Accordingly, the request to withdraw from record cannot be approved because a proper forwarding address was not provided. The request to change the correspondence address should be that of the: (1) the first named inventor; or (2) an assignee of the entire interest under 37 C.F.R 3.71, who has properly intervened. If an assignee has intervened in this application then a Statement under 37 CFR 3.73(b), or a copy of the actual assignment, must be submitted with a renewed request.

All future communications from the Office will continue to be directed to the above-identified address until otherwise properly notified.

Telephone inquiries concerning this decision should be directed to the undersigned at 571-272- 4618.

/Kimberly Inabinet/

Kimberly Inabinet
Petitions Examiner
Office of Petitions

UNITED STATES PATENT AND TRADEMARK OFFICE

Commissioner for Patents
United States Patent and Trademark Office
P.O. Box 1450
Alexandria, VA 22313-1450
www.uspto.gov

THE LAW FIRM OF SUSANNE M. MOORE
SUSANNE M. MOORE
1014 BROADWAY
LUBBOCK TX 79401-3302

MAILED
NOV 26 2010
OFFICE OF PETITIONS

In re Application of	:	
Aubrey Eugene HAMBY	:	
Application No. 12/912,918	:	DECISION ON PETITION
Filed: October 27, 2010	:	TO MAKE SPECIAL UNDER
Attorney Docket No. HAMBY002	:	37 CFR 1.102(c)(1)
	:	

This is a decision on the petition under 37 CFR 1.102(c)(1), filed October 27, 2010, to make the above-identified application special based on applicant's age as set forth in M.P.E.P. § 708.02, Section IV.

The petition is **GRANTED**.

A grantable petition to make an application special under 37 CFR 1.102(c)(1) and MPEP § 708.02, Section IV: Applicant's Age must be accompanied by evidence showing that at least one of the applicants is 65 years of age, or more, such as a birth certificate or a statement by applicant. No fee is required

The instant petition includes a statement made by registered attorney Susanne M. Moore, which will be treated as the result of the attorney having evidence that at least one of the applicants is 65 years of age or more. In the event that such evidence is not with the attorney, the Office should be notified immediately. Accordingly, the above-identified application has been accorded "special" status.

Telephone inquiries concerning this decision should be directed to the undersigned at (571) 272-6735.

All other inquiries should be directed to the Office of Data Management at (571) 271-4000.

This matter is being referred to the Office of Data Management for processing. This application will be accorded "special" status when pre-examination processing is done.

/DCG/
Diane C. Goodwyn
Petitions Examiner
Office of Petitions

UNITED STATES PATENT AND TRADEMARK OFFICE

Commissioner for Patents
United States Patent and Trademark Office
P.O. Box 1450
Alexandria, VA 22313-1450
www.uspto.gov

MOTOROLA MOBILITY, INC
600 NORTH US HIGHWAY 45
W2-55BB
LIBERTYVILLE, IL 60048-5343

MAILED
OCT 19 2011
OFFICE OF PETITIONS

In re Application of :
Fabrice Quinard et al :
Application No. 12/912,961 :
Filed: October 27, 2010 :
Attorney Docket No. TER00177 C01 :

ON PETITION

This is a decision on the petition under 37 CFR 1.137(b), filed October 11, 2011, to revive the above-identified application.

The petition is **GRANTED.**

The above-identified application became abandoned for failure to reply in a timely manner to the non-final Office action mailed February 4, 2011, which set a shortened statutory period for reply of three (3) months. No extension of time under the provisions of 37 CFR 1.136(a) was obtained. Accordingly, the above-identified application became abandoned on May 5, 2011.

Telephone inquiries concerning this decision should be directed to Irvin Dingle at (571) 272-3210.

This matter is being referred to Technology Center AU 2611 for further processing.

Irvin Dingle
Petitions Examiner
Office of Petitions

UNITED STATES PATENT AND TRADEMARK OFFICE

Commissioner for Patents
United States Patent and Trademark Office
P.O. Box 1450
Alexandria, VA 22313-1450
www.uspto.gov

KING & SPALDING LLP
401 CONGRESS AVENUE
SUITE 3200
AUSTIN, TX 78701

MAILED
JUN 16 2011
OFFICE OF PETITIONS

In re Application of	:	
James B. Nolan, et al.	:	
Application No.: 12/913,066	:	ON PETITION
Filed: October 27, 2010	:	
Attorney Docket No.: 68354.118381	:	

This is a decision on the petition, filed June 15, 2011, under 37 CFR 1.313(c)(2) to withdraw the above-identified application from issue after payment of the issue fee.

The petition is **GRANTED**.

The above-identified application is withdrawn from issue for consideration of a submission under 37 CFR 1.114 (request for continued examination). See 37 CFR 1.313(c)(2).

Petitioner is advised that the issue fee paid on June 1, 2011, cannot be refunded. If, however, this application is again allowed, petitioner may request that it be applied towards the issue fee required by the new Notice of Allowance.[1]

Telephone inquiries relating to this decision should be directed to the undersigned at (571) 272-3204.

The application is being referred to Technology Center AU 2817 for further processing of the request for continued examination under 37 CFR 1.114 and for consideration of the concurrently filed Information Disclosure Statement (IDS).

/SDB/

Sherry D. Brinkley
Petitions Examiner
Office of Petitions

[1] *The request to apply the issue fee to the new Notice may be satisfied by completing and returning the new Part B – Fee(s) Transmittal Form (along with any balance due at the time of submission). Petitioner is advised that the Issue Fee Transmittal Form must be completed and timely submitted to avoid abandonment of the application.*

UNITED STATES PATENT AND TRADEMARK OFFICE

UNITED STATES DEPARTMENT OF COMMERCE
United States Patent and Trademark Office
Address: COMMISSIONER FOR PATENTS
P.O. Box 1450
Alexandria, Virginia 22313-1450
www.uspto.gov

APPLICATION NO.	FILING DATE	FIRST NAMED INVENTOR	ATTORNEY DOCKET NO.	CONFIRMATION NO.
12/913,074	10/27/2010	Ju Heon Lee	87383(309204)	3196

90238 7590 05/03/2011
Edwards Angell Palmer & Dodge LLP
P.O. Box 55874
Boston, MA 02205

EXAMINER
STAMBER, ERIC W

ART UNIT	PAPER NUMBER
3622	

NOTIFICATION DATE	DELIVERY MODE
05/03/2011	ELECTRONIC

Please find below and/or attached an Office communication concerning this application or proceeding.

The time period for reply, if any, is set in the attached communication.

Notice of the Office communication was sent electronically on above-indicated "Notification Date" to the following e-mail address(es):

patent@eapdlaw.com

UNITED STATES PATENT AND TRADEMARK OFFICE

Commissioner for Patents
United States Patent and Trademark Office
P.O. Box 1450
Alexandria, VA 22313-1450
www.uspto.gov

MAY 0 2 2011

Edwards Angell Palmer & Dodge LLP
P.O. Box 55874
Boston MA 02205

In re application of:	:	**DECISION ON REQUEST TO**
Lee, Ju Heon	:	**PARTICIPATE IN PATENT**
Application No.: 12/913,074	:	**PROSECUTION HIGHWAY**
Filed: October 27, 2010	:	**PROGRAM AND PETITION**
For: METHOD FOR PROCESSING	:	**TO MAKE SPECIAL UNDER**
MOBILE ADVERTISEMENT	:	**37 C.F.R. 1.102(d)**

This is a decision on the request to participate in the Patent Prosecution Highway (PPH) program between the USPTO and the KIPO and the petition under 37 C.F.R. § 1.102(d), filed March 18, 2011, to make the above-identified application special.

The request and petition are **GRANTED**.

A grantable request to participate in this PPH program and petition to make special, at the date of the request, require:

(1) The U.S. application must validly claim priority under 35 USC 119(a) to one or more applications filed in the KIPO;

2) Applicant must submit a copy of the allowable/patentable claim(s) from the KIPO application(s) along with an English translation thereof and a statement that the English translation is accurate;

(3) All the claims in the U.S. application must sufficiently correspond or be amended to sufficiently correspond to the allowable/patentable claims in the KIPO application(s);

(4) Examination of the U.S. application for which participation in the PPH program is requested has not begun;

(5) Applicant must submit a copy of the latest Office action from each of the KIPO application(s) containing the allowable/patentable claim(s)

along with an English translation thereof and a statement that the English translation is accurate;

(6) Applicant must submit an IDS listing the documents cited by the KIPO examiner in the KIPO Office action along with copies of documents except U.S. patents or U.S. patent application publications; and

In light of the petition, the supporting documents filed March 18, 2011, and the IDS filed October 27, 2010, the request to participate in the PPH program complies with the above requirements and the above identified application has been accorded "special" status.

The application is being forwarded to the examiner for action on the merits commensurate with this decision.

Any inquiry regarding this decision should be directed to Robert Weinhardt, Business Practice Specialist, at (571) 272-6633.

All other queries concerning the examination or status of the application should be directed to the Patent Application Information Retrieval (PAIR) system or the examiner of record in the application.

Robert Weinhardt
Business Practice Specialist
Technology Center 3600

RW/4/29/11

IN THE UNITED STATES PATENT AND TRADEMARK OFFICE

First Named Inventor: Brian Steurer	)
Confirmation No.: 3326	)
	)
Serial No.: 12/913129	)
	)
Filing Date: 10-27-2010	)
	)
Atty Docket No.: 241042-1	)

VIA EFS
Commissioner for Patents
P.O. Box 1450
Alexandria, VA 22313-1450

Statement Concerning the Basis for the Special Status

SIR:

This disclosure relates to energy management, and more particularly to energy management of household consumer appliances. The disclosure finds particular application to changing existing appliances via add-on features or modules, and incorporating new energy saving features and functions into new appliances. (See [0002]).

Currently utilities charge a flat rate, but with increasing cost of fuel prices and high energy usage at certain parts of the day, utilities have to buy more energy to supply customers during peak demand. Utility companies have to find ways to temporarily provide for this higher energy use, which comes at great expense to utility companies. Consequently, utilities are charging higher rates during peak demand. If the utility company can communicate that power is in high demand, home appliances, such as ranges that are typically used during peak time (later afternoon), could notify the consumer that demand is high and

reduce peak power usage of the appliance and allow the utility company to shed load. This “demand response” capability in cooking appliances spread over thousands of customers would allow the utility company to shed a significant amount of peak load. (See [0003]).

One proposed solution is to provide a system where a control module "switches" the actual energy supply to the appliance or control unit on and off. However, there is no active control beyond the mere on/off switching. It is believed that others in the industry cease some operations in a refrigerator during on-peak time. (See [0004]).

There are also currently different methods used to determine when variable electricity-pricing schemes go into effect. There are phone lines, schedules, and wireless signals sent by the electrical company. One difficulty is that no peak shaving method for an appliance such as a refrigerator will provide a maximal benefit. Further, different electrical companies use different methods of communicating periods of high electrical demand to their consumers. Other electrical companies simply have rate schedules for different times of day. (See [0005]).

Surface burners are used 2-3 times more often than the oven, and consume about the same peak power as the oven, but over half the amount of the time cycle. The best opportunity to shed power on surface burners is during high settings. At low settings, reducing power can result in undercooked food that may affect food safety, and since surface cooking is attended, the consumer can merely increase the power. High settings are typically initiated to perform

non-direct-cooking related activities, such as boiling water. Normal cooking occurs at 30% or less max power on a surface burner, while bringing water to a boil utilizes 100% power. (See [0006]).

It is common during cooking for the oven and the surface burners to be used at the same time. During oven pre-heat, the oven operates at nearly 100% power. During this time, the surface burners are often also operated at high power for functions such as boiling water or heating a pan. Both the oven and the surface burners are typically duty cycle driven, such that cycling on both the oven and surface burners at the same time may pull 6kW or more of power. (See [0007]).

While electronic surface burner controls can change or limit duty cycles in response to a “high demand”, many ranges use electromechanical power switching devices that are not electronic. Additionally, most ranges produced today implement control surface elements with series (current sensitive) or parallel (voltage sensitive) infinite switches. These devices operate independently of the oven control and do not interact with a microprocessor. This system aims to provide a way to reduce peak and average power with minimal changes to currently produced non-electronically controlled surface cooking elements, in a cost effective manner. By implementing a simple control, this system is able to react to either a discrete normal demand or higher demand signal. Therefore, this system is a simple, low cost method to shed both peak and average power that does not require expensive range control systems. It is proposed for the surface burners and the oven to share power and still perform

their intended functions by operating at full power when no energy is being used, and running at a reduced power level when another part of the range is running. This reduces the peak and average power consumed by the appliance. This system may be installed on existing products without adding expensive electronic surface control devices that require extensive system level software developments, safety critical hardware & and software interactions, etc. (See [0008]).

In one aspect of the invention, a method for sharing power between at least one primary and at least one secondary heating element in a cooking appliance is provided. The method includes receiving a peak demand signal from an associated DSM indicative of the current state of an associated utility being a peak demand period; initiating an energy saving mode by opening a demand response relay associated with the secondary heating element and switching the relay from a power line to a neutral line; and closing the demand response relay after the peak demand period is over. (See [0009]).

In another aspect, a power sharing system on a cooking appliance. The system includes an appliance including at least one primary heating element and at least one secondary heating element and at least one demand response relay operatively associated with the at least one cooking cavity. The at least one demand response is capable of receiving and processing signals from a DSM indicative of the current state of an associated utility, said state being one of an off-peak and peak demand period, wherein upon receiving a signal indicative of a

peak demand period, said demand response relay initiates energy saving mode. (See [0010]).

In yet another aspect, a power sharing method for reducing the peak power demand on a cooking appliance is provided. The method includes providing an appliance comprising at least one surface heating element and at least one cooking cavity, attaching at least one demand response relay upstream from an associated infinite switch of the appliance, the relay being capable of receiving and processing signals from a demand side management module indicative of the current state of an associated utility, initiating an energy saving mode when a peak demand period signal is received by the relay and at least one surface heating element is used in conjunction with at least one cooking cavity, and opening the relay, thereby reducing the voltage provided to the cooking cavity at by half, wherein the peak demand power is reduced by at least 40%. (See [0011]).

The present disclosure reduces power consumption during on-peak hours by reducing the energy demand on the power generation facility, and also enabling the user/consumer to pay less to operate the appliance on an annual basis. (See [0012]).

Accordingly, Applicant respectfully submits that Special Status is sought on the basis that the embodiments disclosed herein materially contribute to the more efficient utilization and conservation of energy resources.

The undersigned representative may be contacted at the number below to facilitate the resolution of any matters. Please charge any fees that are incurred in connection with this Statement to deposit account no. 09-0470.

Respectfully submitted,

General Electric Company

By : /Allison W. Mages/
Allison W. Mages
Reg. No. 57,275

Dated: December 14, 2011

GE Global Patent Operation
2 Corporate Drive, Suite 648
Shelton, CT 06484
203-944-6730

Doc Code: PET.GREEN
Document Description: Petition for Green Tech Pilot

PTO/SB/420 (11-10)
Approved for use through 01/31/2011. OMB 0651-0062
U.S. Patent and Trademark Office; U. S. DEPARTMENT OF COMMERCE
Under the Paperwork Reduction Act of 1995, no persons are required to respond to a collection of information unless it displays a valid OMB control number.

PETITION TO MAKE SPECIAL UNDER THE GREEN TECHNOLOGY PILOT PROGRAM

Attorney Docket Number: 241042-1	Application Number (if known): 12/913129	Filing date: 10-27-2010
First Named Inventor: Brian Steurer		
Title: SYSTEM FOR REDUCED PEAK POWER CONSUMPTION BY A COOKING APPLIANCE		

APPLICANT HEREBY REQUESTS TO PARTICIPATE IN THE GREEN TECHNOLOGY PILOT PROGRAM FOR THE ABOVE-IDENTIFIED APPLICATION. See Instruction Sheet on page 2.

This petition must be timely filed electronically using the USPTO electronic filing system, EFS-Web.

1. By filing this petition:

   Applicant is requesting early publication: Applicant hereby requests early publication under 37 CFR 1.219 and the publication fee set forth in 37 CFR 1.18(d) accompanies this request.

2. By filing this petition: applicant is agreeing to make an election without traverse in a telephonic interview and elect an invention that meets the eligibility requirements for the Green Technology Pilot Program, if the Office determines that the claims are not obviously directed to a single invention. See Instruction Sheet.

3. This request is accompanied by statements of special status for the eligibility requirement.

4. The application contains no more than three (3) independent claims and twenty (20) total claims.

5. The application does not contain any multiple dependent claims.

6. Other attachments: Statement Concerning the Basis for the Special Status

Signature /Allison W. Mages/	Date 12-14-2011
Name (Print/Typed) Allison W .Mages	Registration Number 57,275

Note: *Signatures of all the inventors or assignees of record of the entire interest or their representative(s) are required in accordance with 37 CFR 1.33 and 11.18. Please see 37 CFR 1.4(d) for the form of the signature. If necessary, submit multiple forms for more than one signature see below*.*

☐ *Total of ..... forms are submitted.

The information is required to obtain or retain a benefit by the public which is to file (and by the USPTO to process) an application. Confidentiality is governed by 35 U.S.C. 122 and 37 CFR 1.11 and 1.14. This collection is estimated to take 12 hours to complete, including gathering, preparing, and submitting the completed application form to the USPTO. Time will vary depending upon the individual case. Any comments on the amount of time you require to complete this form and/or suggestions for reducing this burden, should be sent to the Chief Information Officer, U.S. Patent and Trademark Office, U.S. Department of Commerce, P.O. Box 1450, Alexandria, VA 22313-1450. DO NOT SEND FEES OR COMPLETED FORMS TO THIS ADDRESS. **SEND TO: Commissioner for Patents, P.O. Box 1450, Alexandria, VA 22313-1450.**

If you need assistance in completing the form, call 1-800-PTO-9199 and select option 2.

Under the Paperwork Reduction Act of 1995, no persons are required to respond to a collection of information unless it displays a valid OMB control number.

Instruction Sheet for Petition to Make Special Under the Green Technology Pilot Program

(Not to be Submitted to the USPTO)

The following is a summary of the requirements (for more information see the notices (i) "Pilot Program for Green Technologies Including Greenhouse Gas Reduction," (ii) "Elimination of Classification Requirement in the Green Technology Pilot Program," and (iii) "Expansion and Extension of the Green Technology Pilot Program," available on the USPTO web site at http://www.uspto.gov/patents/init_events/green_tech.jsp):

1) The application must be a non-reissue, non-provisional utility application filed under 35 U.S.C. 111 (a), or an international application that has entered the national stage in compliance with 35 U.S.C. 371, irrespective of the filing date of the application. Reexamination proceedings are excluded from this pilot program.

2) The application must contain three or fewer independent claims and twenty or fewer total claims. The application must not contain any multiple dependent claims. For an application that contains more than three independent claims or twenty total claims, or multiple dependent claims, applicant must file a preliminary amendment in compliance with 37 CFR 1.121 to cancel the excess claims and/or the multiple dependent claims at the time the petition to make special is filed.

3) The claims must be directed to a single invention that materially enhances the quality of the environment, or that materially contributes to: (1) the discovery or development of renewable energy resources; (2) the more efficient utilization and conservation of energy resources; or (3) green house gas emission reduction (see the eligibility requirements of sections II and III of the notice (i) cited above). The petition must include a statement that, if the USPTO determines that the claims are directed to multiple inventions (e.g., in a restriction requirement), applicant will agree to make an election without traverse in a telephonic interview, and elect an invention that meets the eligibility requirements in section II or III of the notice (i) cited above.

4) The petition to make special must be timely filed electronically using the USPTO electronic filing system, EFS-Web, and selecting the document description of "Petition for Green Tech Pilot" on the EFS-Web screen. Applicant should use form PTO/SB/420, which is available as a Portable Document Format (PDF) fillable form in EFS-Web and on the USPTO Web site.

5) The petition to make special must be filed at least one day prior to the date that a first Office action (which may be an Office action containing only a restriction requirement) appears in the Patent Application Information Retrieval (PAIR) system. Applicant may check the status of the application using PAIR.

6) The petition to make special must be accompanied by a request for early publication in compliance with 37 CFR 1.219 and the publication fee set forth in 37 CFR 1.18(d).

Privacy Act Statement

The **Privacy Act of 1974 (P.L. 93-579)** requires that you be given certain information in connection with your submission of the attached form related to a patent application or patent. Accordingly, pursuant to the requirements of the Act, please be advised that: (1) the general authority for the collection of this information is 35 U.S.C. 2(b)(2); (2) furnishing of the information solicited is voluntary; and (3) the principal purpose for which the information is used by the U.S. Patent and Trademark Office is to process and/or examine your submission related to a patent application or patent. If you do not furnish the requested information, the U.S. Patent and Trademark Office may not be able to process and/or examine your submission, which may result in termination of proceedings or abandonment of the application or expiration of the patent.

The information provided by you in this form will be subject to the following routine uses:

1. The information on this form will be treated confidentially to the extent allowed under the Freedom of Information Act (5 U.S.C. 552) and the Privacy Act (5 U.S.C 552a). Records from this system of records may be disclosed to the Department of Justice to determine whether disclosure of these records is required by the Freedom of Information Act.
2. A record from this system of records may be disclosed, as a routine use, in the course of presenting evidence to a court, magistrate, or administrative tribunal, including disclosures to opposing counsel in the course of settlement negotiations.
3. A record in this system of records may be disclosed, as a routine use, to a Member of Congress submitting a request involving an individual, to whom the record pertains, when the individual has requested assistance from the Member with respect to the subject matter of the record.
4. A record in this system of records may be disclosed, as a routine use, to a contractor of the Agency having need for the information in order to perform a contract. Recipients of information shall be required to comply with the requirements of the Privacy Act of 1974, as amended, pursuant to 5 U.S.C. 552a(m).
5. A record related to an International Application filed under the Patent Cooperation Treaty in this system of records may be disclosed, as a routine use, to the International Bureau of the World Intellectual Property Organization, pursuant to the Patent Cooperation Treaty.
6. A record in this system of records may be disclosed, as a routine use, to another federal agency for purposes of National Security review (35 U.S.C. 181) and for review pursuant to the Atomic Energy Act (42 U.S.C. 218(c)).
7. A record from this system of records may be disclosed, as a routine use, to the Administrator, General Services, or his/her designee, during an inspection of records conducted by GSA as part of that agency's responsibility to recommend improvements in records management practices and programs, under authority of 44 U.S.C. 2904 and 2906. Such disclosure shall be made in accordance with the GSA regulations governing inspection of records for this purpose, and any other relevant (*i.e.*, GSA or Commerce) directive. Such disclosure shall not be used to make determinations about individuals.
8. A record from this system of records may be disclosed, as a routine use, to the public after either publication of the application pursuant to 35 U.S.C. 122(b) or issuance of a patent pursuant to 35 U.S.C. 151. Further, a record may be disclosed, subject to the limitations of 37 CFR 1.14, as a routine use, to the public if the record was filed in an application which became abandoned or in which the proceedings were terminated and which application is referenced by either a published application, an application open to public inspection or an issued patent.
9. A record from this system of records may be disclosed, as a routine use, to a Federal, State, or local law enforcement agency, if the USPTO becomes aware of a violation or potential violation of law or regulation.

UNITED STATES PATENT AND TRADEMARK OFFICE

UNITED STATES DEPARTMENT OF COMMERCE
United States Patent and Trademark Office
Address: COMMISSIONER FOR PATENTS
P.O. Box 1450
Alexandria, Virginia 22313-1450
www.uspto.gov

APPLICATION NO.	FILING DATE	FIRST NAMED INVENTOR	ATTORNEY DOCKET NO.	CONFIRMATION NO.
12/913,129	10/27/2010	Brian M. Steurer	241042 (GECZ 201078US01)	3326

27885 7590 12/20/2011
FAY SHARPE LLP
1228 Euclid Avenue, 5th Floor
The Halle Building
Cleveland, OH 44115

EXAMINER
YUEN, HENRY C

ART UNIT	PAPER NUMBER
3742	

MAIL DATE	DELIVERY MODE
12/20/2011	PAPER

Please find below and/or attached an Office communication concerning this application or proceeding.

The time period for reply, if any, is set in the attached communication.

UNITED STATES PATENT AND TRADEMARK OFFICE

Commissioner for Patents
United States Patent and Trademark Office
P.O. Box 1450
Alexandria, VA 22313-1450
www.uspto.gov

FAY SHARPE LLP
1228 Euclid Avenue, 5th Floor
The Halle Building
Cleveland OH 44115

In re Application of
STEURER, BRIAN M.
Application No. 12/913,129
Filed: Oct. 27, 2010
Attorney Docket No. 241042/GECZ-201078US01

DECISION ON PETITION TO MAKE SPECIAL UNDER THE GREEN TECHNOLOGY PILOT PROGRAM

This is a decision on the petition under 37 CFR 1.102, filed Dec. 14, 2011, to make the above-identified application special under the pilot program for applications pertaining to Green Technologies as set forth in 74 Federal Register Notice 64666 (December 8, 2009) and amended by 75 Federal Register Notice 28554 (May 21, 2010) and 75 Federal Register Notice 69049 (November 10, 2010).

The petition is **dismissed**.

A grantable petition to make an application special under 37 CFR 1.102 and the pilot program as set forth in 74 FR 64666 must be directed to a nonprovisional application filed under 35 USC 111(a) or be a national stage entry under 35 USC 371, exclusive of any reissue applications.

If reconsideration of this decision is desired, a petition for reconsideration must be filed within ONE (1) MONTH OR THIRTY (30) DAYS from the mail date of this decision, whichever is longer. No extension of this time limit can be granted under 37 CFR 1.136(a) or (b). The petition for reconsideration should include an exhaustive attempt to provide the lacking item(s) noted below, since, after a decision on the petition for reconsideration, no further reconsideration or review of the matter will be undertaken by the Director.

In order to qualify for special status, the following requirements must be met. 1) The application must have no more than 3 independent claims and no more than 20 total claims. 2) The application must not contain any multiple dependent claims. 3) The petition must state the basis for seeking special status, i.e., the claimed invention either: A) materially enhances the quality of the environment or B) materially contributes to: i) the discovery or development of renewable energy resources, ii) the more efficient utilization and conservation of energy resources, or iii)

greenhouse gas emission reduction. 4) If the disclosure is not clear on its face that the claimed invention materially contributes under category (A) or (B), the petition must be accompanied by a statement by the applicant, assignee, or an attorney/agent registered to practice before the Office explaining how the materiality standard is met. 5) A statement that applicant will agree to make an election without traverse in a telephonic interview if a restriction requirement is made by the examiner. 6) The petition to make special must be filed electronically. 7) The petition must be filed at least one day prior to the date that a first Office Action appears in the Patent Application Information Retrieval (PAIR) system. 8) The petition must be accompanied by a request for early publication in compliance with 37 CFR 1.219 and include the publication fee as set forth in 37 CFR 1.18(d).

The requirement for a fee for consideration of the petition to make special for applications pertaining to Green Technologies has been waived. The petition lacks item # 4.

In regard to item 4, petitioner should note that the instant petition includes a statement identifying the basis for the special status (i.e., whether the instant invention (1) materially enhances the quality of the environment or materially contributes to (2) development of renewable energy resources or energy conservation, or (3) greenhouse gas reduction) as required by sections II and III of the notice. However, as stated in the notice, applicant must also provide a statement pertaining to the materiality standard if the application disclosure is not clear on its face as to the materiality of the basis for the special status of the invention. This petition lacks such a statement and it is not agreed that the application on its face meets that materiality standard. Petitioner states that the claimed peal power reduction relates to green technology. This is not convincing. For example, it is not clear how the claimed signal responsive of switching between a high voltage power supply to a low voltage power supply will provide and enhance the quality of the environment or contribute to development of renewable energy resources or energy conservation or greenhouse gas reduction. There is no power savings at all.

Any reconsideration of this decision should be submitted through the USPTO electronic filing system, EFS-Web, and selecting the document description of "Petition for Green Tech Pilot" on the EFS-Web screen. Telephone inquiries concerning this decision should be directed to Henry C. Yuen at 571-272-4856. The application will be forwarded to the Technology Center Art Unit 3742 for action in its regular turn.

/Henry C. Yuen/

Henry C. Yuen
Quality Assurance Specialist
Technology Center 3700

IN THE UNITED STATES PATENT AND TRADEMARK OFFICE

First Named Inventor: Brian M. STEURER	)
Confirmation No.: 3326	)
	)
Serial No.: 12/913,129	)
	)
Filing Date: 10-27-2010	)
	)
Atty Docket No.: 241042-1 (GECZ 201078US01)	)

Commissioner for Patents
P.O. Box 1450
Alexandria, VA 22313-1450

Request for Reconsideration

SIR:

This is responsive to the Decision on Petition, dated as mailed 20 December 2011, in the above-referenced application.

Applicant respectfully requests reconsideration of Applicant's Petition to Make Special on the basis that the present invention materially contributes to more efficient utilization of and conservation of energy resources.

The Decision to Make Special Under the Green Technology Pilot Program (hereinafter "the Decision") states that it is not agreed that the application on its face meets the materiality standard. The Decision alleges that Applicant's statement that the claimed peal power reduction relates to green technology is not convincing. The Decision states that it is not clear how the claimed signal responsive of switching between a high voltage power supply to a low voltage power supply will provide and enhance the quality of the environment or contribute to the development of renewable energy resources or energy conservation or greenhouse gas reduction. The Decision alleges that there is no

power savings at all. Applicant does not agree with the comments made in the Decision.

Applicant respectfully submits that the present invention relates to energy management, and more particularly to energy management of household consumer appliances. The disclosure finds particular application to changing existing appliances via add-on features or modules, and incorporating new energy saving features and functions into new appliances. (see at least paragraph [0002]).

Smart technology generally relates to a class of technology that uses computer-based remote control and automation. These systems are made possible by two-way communication technology and computer processing and offer many benefits to utilities and consumers; mostly seen in big improvements in energy efficiency. Amongst several benefits, smart energy technologies allow for greater informational awareness and control of energy flow. This informational awareness allows consumers to interface with their energy consumption, providing new levels of detail on how, and how much, electricity is being consumed and at what cost in real time, and give them the tools to increase or decrease their consumption. It also allows utilities to more efficiently manage and adjust electricity transmission, reducing the likelihood of outages and congestion while improving billing accuracy for consumers. Smart energy generally provides consumers and utilities a greater ability to adapt to changing market conditions for greater energy efficiency. ("Smart Grid", Office of Electricity Delivery & Energy Reliability. 2011. Web. 28 July 2011).

Currently utilities charge a flat rate, but with increasing cost of fuel prices and high energy usage at certain parts of the day, utilities have to buy more energy to supply customers during peak demand. Utility companies have to find ways to temporarily provide for this higher energy use, which comes at great expense to utility companies. Consequently, utilities are charging higher rates during peak demand. If the utility company can communicate that power is in high demand, home appliances, such as ranges that are typically used during peak time (later afternoon), could notify the consumer that demand is high and reduce peak power usage of the appliance and allow the utility company to shed load. This "demand response" capability in cooking appliances spread over thousands of customers would allow the utility company to shed a significant amount of peak load. (see at least paragraph [0003]).

One proposed third party solution is to provide a system where a control module "switches" the actual energy supply to the appliance or control unit on and off. However, there is no active control beyond the mere on/off switching. It is believed that others in the industry cease some operations in a refrigerator during on-peak time. (see at least paragraph [0004]).

There are also currently different methods used to determine when variable electricity-pricing schemes go into effect. There are phone lines, schedules, and wireless signals sent by the electrical company. One difficulty is that no peak shaving method for an appliance such as a refrigerator will provide a maximal benefit. Further, different electrical companies use different methods of communicating periods of high electrical demand to their consumers. Other

electrical companies simply have rate schedules for different times of day. (see at least paragraph [0005]).

Surface burners are used 2-3 times more often than the oven, and consume about the same peak power as the oven, but over half the amount of the time cycle. The best opportunity to shed power on surface burners is during high settings. At low settings, reducing power can result in undercooked food that may affect food safety, and since surface cooking is attended, the consumer can merely increase the power. High settings are typically initiated to perform non-direct-cooking related activities, such as boiling water. Normal cooking occurs at 30% or less max power on a surface burner, while bringing water to a boil utilizes 100% power. (see at least paragraph [0006]).

It is common during cooking for the oven and the surface burners to be used at the same time. During oven pre-heat, the oven operates at nearly 100% power. During this time, the surface burners are often also operated at high power for functions such as boiling water or heating a pan. Both the oven and the surface burners are typically duty cycle driven, such that cycling on both the oven and surface burners at the same time may pull 6kW or more of power. (see at least paragraph [0007]).

While electronic surface burner controls can change or limit duty cycles in response to a "high demand", many ranges use electromechanical power switching devices that are not electronic. Additionally, most ranges produced today implement control surface elements with series (current sensitive) or parallel (voltage sensitive) infinite switches. These devices operate

independently of the oven control and do not interact with a microprocessor. (see at least paragraph [0008]).

Embodiments of the present invention aim to provide a way to reduce peak and average power with minimal changes to currently produced non-electronically controlled surface cooking elements, in a cost effective manner. By implementing a simple control, this system is able to react to either a discrete normal demand or higher demand signal. Therefore, this system is a simple, low cost method to shed both peak and average power that does not require expensive range control systems. It is proposed for the surface burners and the oven to share power and still perform their intended functions by operating at full power when no energy is being used, and running at a reduced power level when another part of the range is running. This reduces the peak and average power consumed by the appliance. This system may be installed on existing products without adding expensive electronic surface control devices that require extensive system level software developments, safety critical hardware & and software interactions, etc. (see at least paragraph [0008]).

In one embodiment, a more advanced system is provided to handle energy management between the utility and the homeowner's appliances. The system can include one or more of the following: a controller, utility meter, communication network, intelligent appliances, local storage, local generator, demand server, and/or a multi-zone heating element. Less advanced systems may actually allow the appliance to "communicate directly with the utility meter or mesh network through the DSMM (Demand Side Management Module). The

demand server is a computer system that notifies the controller when the utility is in peak demand and what is the utility's current demand limit. A utility meter can also provide the controller the occurrence of peak demand and demand limit. The demand limit can also be set by the home owner. Additionally, the homeowner can choose to force various modes in the appliance control based on the rate the utility is charging at different times of the day. The controller will look at the energy consumption currently used by the home via the utility meter and see if the home is exceeding the demand limit read from the server. If the demand limit is exceeded, the controller will notify the intelligent appliances, lighting and thermostat/HVAC. (see at least paragraph [0024]).

The interaction between controller and appliances can occur in various ways. For example, in one scenario during a peak demand period, the controller will receive a demand limit from the utility, demand server or user. The controller will then allocate the home's demand based on two factors: priority of the appliance and energy need level (Figure 3). The priority dictates which appliances have higher priority to be in full or partial energy mode than other appliances. Energy need dictates how much energy is required for a certain time period in order for that appliance to function properly. If the appliance's energy need is too low to function properly, the appliance moves to a normal mode or a higher energy need level. The energy saving mode is typically a lower energy usage mode for the appliance such as shutdowns of compressors and motors, delayed cycles, higher operating temperatures in summer or lower operating temperatures in winter until the peak demand period is over. Once the demand

limit is reached, the appliances will stay in their energy mode until peak demand is over, or a user overrides, or appliance finishes need cycle or priority changes. The controller constantly receives status updates from the appliances in order to determine which state they are in and in order to determine if priorities need to change to accomplish the system goals. (see at least paragraph [0025]).

The embodiments disclosed in the present application provide for the operation of appliances in an efficient and/or cost effective manner. Amongst several benefits, embodiments of the present invention allow for greater informational awareness and control of energy flow, which has been shown to encourage reductions in energy consumption, and results in greater energy efficiency on the part of consumers and utilities. As such, the present invention promotes the more efficient utilization of and conservation of energy.

The undersigned attorney may be contacted at the number below to facilitate the resolution of any matters. Please charge any fees that are incurred in connection with this Statement to deposit account no. 09-0470.

Respectfully submitted,

General Electric Company

By : /Allison W Mages /
Allison Weiner Mages
Reg. No. 57,275

Dated: January 20, 2012

GE Global Patent Operation
2 Corporate Drive, Suite 648
Shelton, CT 06484
203-944-6755

UNITED STATES PATENT AND TRADEMARK OFFICE

UNITED STATES DEPARTMENT OF COMMERCE
United States Patent and Trademark Office
Address: COMMISSIONER FOR PATENTS
P.O. Box 1450
Alexandria, Virginia 22313-1450
www.uspto.gov

APPLICATION NO.	FILING DATE	FIRST NAMED INVENTOR	ATTORNEY DOCKET NO.	CONFIRMATION NO.
12/913,129	10/27/2010	Brian M. Steurer	241042 (GECZ 201078US01)	3326

27885 7590 01/30/2012
FAY SHARPE LLP
1228 Euclid Avenue, 5th Floor
The Halle Building
Cleveland, OH 44115

EXAMINER
YUEN, HENRY C

ART UNIT	PAPER NUMBER
3742	

MAIL DATE	DELIVERY MODE
01/30/2012	PAPER

Please find below and/or attached an Office communication concerning this application or proceeding.

The time period for reply, if any, is set in the attached communication.

UNITED STATES PATENT AND TRADEMARK OFFICE

Commissioner for Patents
United States Patent and Trademark Office
P.O. Box 1450
Alexandria, VA 22313-1450
www.uspto.gov

FAY SHARPE LLP
1228 Euclid Avenue, 5th Floor
The Halle Building
Cleveland OH 44115

1/30/12

In re Application of	:	
Brian M. Steurer	:	DECISION ON PETITION
Application No. 12/913,129	:	TO MAKE SPECIAL UNDER
Filed: October 27, 2010	:	THE GREEN TECHNOLOGY
Attorney Docket No. 241042 (GECZ 201078US01)	:	PILOT PROGRAM

This is a decision on the petition under 37 CFR 1.102, filed January 20, 2012, to make the above-identified application special under the pilot program for applications pertaining to Green Technologies as set forth in 74 Federal Register Notice 64666 (December 8, 2009) and amended by 75 Federal Register Notice 28554 (May 21, 2010), 75 Federal Register Notice 69049 (November 10, 2010) and 76 Federal Register Notice 77979 (December 15, 2011).

The petition is **GRANTED**.

A grantable petition to make an application special under 37 CFR 1.102 and the pilot program as set forth in 74 FR 64666 must be directed to a nonprovisional application filed under 35 USC 111(a) or be a national stage entry under 35 USC 371, exclusive of any reissue applications.

In order to qualify for special status, the following requirements must be met. 1) The application must have no more than 3 independent claims and no more than 20 total claims. 2) The application must not contain any multiple dependent claims. 3) The petition must state the basis for seeking special status, i.e., the claimed invention either: A) materially enhances the quality of the environment or B) materially contributes to: i) the discovery or development of renewable energy resources, ii) the more efficient utilization and conservation of energy resources, or iii) greenhouse gas emission reduction. 4) If the disclosure is not clear on its face that the claimed invention materially contributes under category (A) or (B), the petition must be accompanied by a statement by the applicant, assignee, or an attorney/agent registered to practice before the Office explaining how the materiality standard is met. 5) A statement that applicant will agree to make an election without traverse in a telephonic interview if a restriction requirement is made by the examiner. 6) The petition to make special must be filed electronically. 7) The petition must be filed at least one day prior to the date that a first Office Action appears in the Patent Application Information Retrieval (PAIR) system. 8) The petition must be accompanied by a request for early publication in compliance with 37 CFR 1.219 and include the publication fee as set forth in 37 CFR 1.18(d).

The requirement for a fee for consideration of the petition to make special for applications pertaining to Green Technologies has been waived.

The instant petition complies with items 1 – 8 above. Accordingly, the above-identified application has been accorded "special" status.

Telephone inquires concerning this decision should be directed to Blaine Copenheaver at 571-272-1156.

/Blaine Copenheaver/

Blaine Copenheaver
Quality Assurance Specialist
Technology Center 1700

IN THE UNITED STATES PATENT AND TRADEMARK OFFICE

First Named Inventor: JohnK. BESORE	)
Confirmation No.: 3331	)
	)
Serial No.: 12/913,133	)
	)
Filing Date: 10-27-2010	)
	)
Atty Docket No.: 246786-1 (GECZ 201141US01)	)

VIA EFS
Commissioner for Patents
P.O. Box 1450
Alexandria, VA 22313-1450

Statement Concerning the Basis for the Special Status

SIR:

This application relates to a demand supply response associated with an appliance, and particularly a refrigerated appliance where operation of the refrigerated appliance may be altered in response to a high demand for energy and peak pricing. (See [0002])

In response to utility companies beginning to charge higher rates during peak demand periods, there is a desire to control or reduce energy use by appliances which also results in a potential cost savings for the consumer/homeowner. Various responses have been proposed for different appliances, including refrigerators, when higher rates are being charged during peak demand periods. Generally speaking, inactivating or disabling anti-sweat heaters is sometimes avoided as a viable demand response option during peak pricing because of the potential concern that moisture or water could reach the floor. It is recognized that peak pricing periods could last two to four hours or

more and, in this time frame, there is the possibility that sweat could develop in such regions. Therefore, because there is a concern about sweat developing on the mullion bar during an extended high or critical rate (particularly in high humidity environments) and that such sweat formation will possibly be exacerbated because the home air conditioning will also be concurrently "controlled" to a condition that will produce increased humidity in the conditioned space, the anti-sweat heaters are typically left operational during peak demand periods. Moreover, 8-12 watts is deemed to be a relatively small energy value and thus proposed demand responses have focused on other energy and cost saving areas that could result in a greater energy savings. (See [0007])

In one aspect of the invention, a refrigerated appliance includes a housing having a cooled storage compartment. An anti-sweat heater warms at least a portion of the housing. A controller operatively connected to one or more power consuming features of the refrigerated appliance is configured to receive and process a demand response signal. In response, the controller inactivates the anti-sweat heater in at least an energy savings mode and selectively activates the anti-sweat heater for at least a limited time period during the energy savings mode. A first temperature sensor and humidity sensor detect an air dry-bulb temperature and humidity, respectively, of an ambient environment near the refrigerated appliance and convey data to the controller to calculate a dew point temperature. A second temperature sensor is operative to detect a surface temperature of a preselected region of the housing and convey this temperature data to the controller. The controller compares the preselected region

temperature data with the calculated dew point temperature to determine whether to activate the anti-sweat heater. (See [0009])

A control method for a refrigerated appliance includes receiving a demand response signal indicative of at least a peak demand period and an off-peak demand period. The method further includes operating the appliance in a normal mode during the off-peak demand period and in an energy savings mode during the peak demand period. The method includes disabling an anti-sweat heater during the peak demand period. In response to sensing a surface temperature of an external surface portion of the appliance, calculating an ambient dew point by monitoring the air dry-bulb temperature and humidity of the ambient air adjacent the appliance, comparing the surface temperature with the calculated dew point, the method includes enabling the anti-sweat heater during the peak demand period when the surface temperature approaches the calculated dew point. (See [0014])

A primary advantage of the present disclosure is the ability to provide a low cost solution to taking advantage of load shedding in a peak demand period for a refrigerated appliance. (See [0017])

Therefore, Applicant respectfully submits that Special Status is sought on the basis that the present invention materially contributes to the more efficient utilization and conservation of energy resources.

The undersigned representative may be contacted at the number below to facilitate the resolution of any matters. Please charge any fees that are incurred in connection with this Statement to deposit account no. 09-0470.

Respectfully submitted,

General Electric Company

By : /Allison W. Mages/
Allison W. Mages
Reg. No. 57,275

Dated: November 12, 2011

GE Global Patent Operation
2 Corporate Drive, Suite 648
Shelton, CT 06484
203-944-6730

Doc Code: PET.GREEN
Document Description: Petition for Green Tech Pilot

PTO/SB/420 (03-11)

PETITION TO MAKE SPECIAL UNDER THE GREEN TECHNOLOGY PILOT PROGRAM

Attorney Docket Number: 246786-1 (GECZ 201141US01)	Application Number (if known): 12/913,133	Filing date: 10-27-2010

First Named Inventor: John K. BESORE

Title: ANTI-SWEAT HEATER DEMAND SUPPPLY MODULE USING TEMPERATURE AND HUMIDITY CONTROL

APPLICANT HEREBY REQUESTS TO PARTICIPATE IN THE GREEN TECHNOLOGY PILOT PROGRAM FOR THE ABOVE-IDENTIFIED APPLICATION. See Instruction Sheet on page 2.

This petition must be timely filed electronically using the USPTO electronic filing system, EFS-Web.

1. By filing this petition:

   Applicant is requesting early publication: Applicant hereby requests early publication under 37 CFR 1.219 and the publication fee set forth in 37 CFR 1.18(d) accompanies this request.

2. By filing this petition: applicant is agreeing to make an election without traverse in a telephonic interview and elect an invention that meets the eligibility requirements for the Green Technology Pilot Program, if the Office determines that the claims are not obviously directed to a single invention. See Instruction Sheet.

3. This request is accompanied by statements of special status for the eligibility requirement.

4. The application contains no more than three (3) independent claims and twenty (20) total claims.

5. The application does not contain any multiple dependent claims.

6. Other attachments: Statement Concerning the Basis for the Special Status

Signature /Allison W. Mages/	Date November 12, 2011
Name (Print/Typed) Allison W. Mages	Registration Number 57,275

Note: *Signatures of all the inventors or assignees of record of the entire interest or their representative(s) are required in accordance with 37 CFR 1.33 and 11.18. Please see 37 CFR 1.4(d) for the form of the signature. If necessary, submit multiple forms for more than one signature, see below*.*

☐ *Total of _____ forms are submitted.

If you need assistance in completing the form, call 1-800-PTO-9199 and select option 2.

Instruction Sheet for
Petition to Make Special Under the Green Technology Pilot Program

(Not to be Submitted to the USPTO)

The following is a summary of the requirements (for more information see the notices (i) "Pilot Program for Green Technologies Including Greenhouse Gas Reduction," (ii) "Elimination of Classification Requirement in the Green Technology Pilot Program," and (iii) "Expansion and Extension of the Green Technology Pilot Program," available on the USPTO web site at http://www.uspto.gov/patents/init_events/green_tech.jsp):

(1) The application must be a non-reissue, non-provisional utility application filed under 35 U.S.C. 111(a), or an international application that has entered the national stage in compliance with 35 U.S.C. 371, irrespective of the filing date of the application. Reexamination proceedings are excluded from this pilot program.

(2) The application must contain three or fewer independent claims and twenty or fewer total claims. The application must not contain any multiple dependent claims. For an application that contains more than three independent claims or twenty total claims, or multiple dependent claims, applicant must file a preliminary amendment in compliance with 37 CFR 1.121 to cancel the excess claims and/or the multiple dependent claims at the time the petition to make special is filed.

(3) The claims must be directed to a single invention that materially enhances the quality of the environment, or that materially contributes to: (1) the discovery or development of renewable energy resources; (2) the more efficient utilization and conservation of energy resources; or (3) green house gas emission reduction (see the eligibility requirements of sections II and III of the notice (i) cited above). The petition must include a statement that, if the USPTO determines that the claims are directed to multiple inventions (e.g., in a restriction requirement), applicant will agree to make an election without traverse in a telephonic interview, and elect an invention that meets the eligibility requirements in section II or III of the notice (i) cited above.

(4) The petition to make special must be timely filed electronically using the USPTO electronic filing system, EFS-Web, and selecting the document description of "Petition for Green Tech Pilot" on the EFS-Web screen. Applicant should use form PTO/SB/420, which is available as a Portable Document Format (PDF) fillable form in EFS-Web and on the USPTO Web site.

(5) The petition to make special must be filed at least one day prior to the date that a first Office action (which may be an Office action containing only a restriction requirement) appears in the Patent Application Information Retrieval (PAIR) system. Applicant may check the status of the application using PAIR.

(6) The petition to make special must be accompanied by a request for early publication in compliance with 37 CFR 1.219 and the publication fee set forth in 37 CFR 1.18(d).

Privacy Act Statement

The **Privacy Act of 1974 (P.L. 93-579)** requires that you be given certain information in connection with your submission of the attached form related to a patent application or patent. Accordingly, pursuant to the requirements of the Act, please be advised that: (1) the general authority for the collection of this information is 35 U.S.C. 2(b)(2); (2) furnishing of the information solicited is voluntary; and (3) the principal purpose for which the information is used by the U.S. Patent and Trademark Office is to process and/or examine your submission related to a patent application or patent. If you do not furnish the requested information, the U.S. Patent and Trademark Office may not be able to process and/or examine your submission, which may result in termination of proceedings or abandonment of the application or expiration of the patent.

The information provided by you in this form will be subject to the following routine uses:

1. The information on this form will be treated confidentially to the extent allowed under the Freedom of Information Act (5 U.S.C. 552) and the Privacy Act (5 U.S.C 552a). Records from this system of records may be disclosed to the Department of Justice to determine whether disclosure of these records is required by the Freedom of Information Act.
2. A record from this system of records may be disclosed, as a routine use, in the course of presenting evidence to a court, magistrate, or administrative tribunal, including disclosures to opposing counsel in the course of settlement negotiations.
3. A record in this system of records may be disclosed, as a routine use, to a Member of Congress submitting a request involving an individual, to whom the record pertains, when the individual has requested assistance from the Member with respect to the subject matter of the record.
4. A record in this system of records may be disclosed, as a routine use, to a contractor of the Agency having need for the information in order to perform a contract. Recipients of information shall be required to comply with the requirements of the Privacy Act of 1974, as amended, pursuant to 5 U.S.C. 552a(m).
5. A record related to an International Application filed under the Patent Cooperation Treaty in this system of records may be disclosed, as a routine use, to the International Bureau of the World Intellectual Property Organization, pursuant to the Patent Cooperation Treaty.
6. A record in this system of records may be disclosed, as a routine use, to another federal agency for purposes of National Security review (35 U.S.C. 181) and for review pursuant to the Atomic Energy Act (42 U.S.C. 218(c)).
7. A record from this system of records may be disclosed, as a routine use, to the Administrator, General Services, or his/her designee, during an inspection of records conducted by GSA as part of that agency's responsibility to recommend improvements in records management practices and programs, under authority of 44 U.S.C. 2904 and 2906. Such disclosure shall be made in accordance with the GSA regulations governing inspection of records for this purpose, and any other relevant (*i.e.*, GSA or Commerce) directive. Such disclosure shall not be used to make determinations about individuals.
8. A record from this system of records may be disclosed, as a routine use, to the public after either publication of the application pursuant to 35 U.S.C. 122(b) or issuance of a patent pursuant to 35 U.S.C. 151. Further, a record may be disclosed, subject to the limitations of 37 CFR 1.14, as a routine use, to the public if the record was filed in an application which became abandoned or in which the proceedings were terminated and which application is referenced by either a published application, an application open to public inspection or an issued patent.
9. A record from this system of records may be disclosed, as a routine use, to a Federal, State, or local law enforcement agency, if the USPTO becomes aware of a violation or potential violation of law or regulation.

UNITED STATES PATENT AND TRADEMARK OFFICE

UNITED STATES DEPARTMENT OF COMMERCE
United States Patent and Trademark Office
Address: COMMISSIONER FOR PATENTS
P.O. Box 1450
Alexandria, Virginia 22313-1450
www.uspto.gov

APPLICATION NO.	FILING DATE	FIRST NAMED INVENTOR	ATTORNEY DOCKET NO.	CONFIRMATION NO.
12/913,133	10/27/2010	John K. Besore	246786 (GECZ 201141US01)	3331

27885 7590 12/07/2011
FAY SHARPE LLP
1228 Euclid Avenue, 5th Floor
The Halle Building
Cleveland, OH 44115

EXAMINER

ART UNIT	PAPER NUMBER
3744	

MAIL DATE	DELIVERY MODE
12/07/2011	PAPER

Please find below and/or attached an Office communication concerning this application or proceeding.

The time period for reply, if any, is set in the attached communication.

UNITED STATES PATENT AND TRADEMARK OFFICE

Commissioner for Patents
United States Patent and Trademark Office
P.O. Box 1450
Alexandria, VA 22313-1450
www.uspto.gov

FAY SHARPE LLP
1228 Euclid Avenue, 5th Floor
The Halle Building
Cleveland OH 44115

In re Application of	:	
BESORE, JOHN K.	:	DECISION ON PETITION
Application No. 12/913,133	:	TO MAKE SPECIAL UNDER
Filed: October 27, 2010	:	THE GREEN TECHNOLOGY
Attorney Docket No. 246786 (GECZ 201141US01)	:	PILOT PROGRAM

This is a decision on the petition under 37 CFR 1.102, filed November 15, 2011, to make the above-identified application special under the pilot program for applications pertaining to Green Technologies as set forth in 74 Federal Register Notice 64666 (December 8, 2009) and amended by 75 Federal Register Notice 28554 (May 21, 2010) and 75 Federal Register Notice 69049 (November 10, 2010).

The petition is **granted**.

A grantable petition to make an application special under 37 CFR 1.102 and the pilot program as set forth in 74 FR 64666 must be directed to a nonprovisional application filed under 35 USC 111(a) or be a national stage entry under 35 USC 371, exclusive of any reissue applications.

If reconsideration of this decision is desired, a petition for reconsideration must be filed within ONE (1) MONTH OR THIRTY (30) DAYS from the mail date of this decision, whichever is longer. No extension of this time limit can be granted under 37 CFR 1.136(a) or (b). The petition for reconsideration should include an exhaustive attempt to provide the lacking item(s) noted below, since, after a decision on the petition for reconsideration, no further reconsideration or review of the matter will be undertaken by the Director.

In order to qualify for special status, the following requirements must be met. 1) The application must have no more than 3 independent claims and no more than 20 total claims. 2) The application must not contain any multiple dependent claims. 3) The petition must state the basis for seeking special status, i.e., the claimed invention either: A) materially enhances the quality of the environment or B) materially contributes to: i) the discovery or development of renewable energy resources, ii) the more efficient utilization and conservation of energy resources, or iii) greenhouse gas emission reduction. 4) If the disclosure is not clear on its face that the claimed invention materially contributes under category (A) or (B), the petition must be accompanied by

a statement by the applicant, assignee, or an attorney/agent registered to practice before the Office explaining how the materiality standard is met. 5) A statement that applicant will agree to make an election without traverse in a telephonic interview if a restriction requirement is made by the examiner. 6) The petition to make special must be filed electronically. 7) The petition must be filed at least one day prior to the date that a first Office Action appears in the Patent Application Information Retrieval (PAIR) system. 8) The petition must be accompanied by a request for early publication in compliance with 37 CFR 1.219 and include the publication fee as set forth in 37 CFR 1.18(d).

The requirement for a fee for consideration of the petition to make special for applications pertaining to Green Technologies has been waived.

The instant petition complies with items 1 – 8 above. Accordingly, the above-identified application has been accorded "special" status.

Telephone inquires concerning this decision should be directed to Henry C. Yuen at 571-272-4856.

This application will be forwarded to the Technology Center Art Unit 3744 for action on the merits commensurate with this decision.

/Henry C. Yuen/

Henry C. Yuen
Quality Assurance Specialist
Technology Center TC 3700

UNITED STATES PATENT AND TRADEMARK OFFICE

Commissioner for Patents
United States Patent and Trademark Office
P.O. Box 1450
Alexandria, VA 22313-1450
www.uspto.gov

WEYERHAEUSER COMPANY
INTELLECTUAL PROPERTY DEPT., CH 1J27
P.O. BOX 9777
FEDERAL WAY WA 98063

MAILED
SEP 13 2011
OFFICE OF PETITIONS

In re Application of	:	
Mark A. STANISH et al.	:	
Application No. 12/913,160	:	DECISION ON PETITION
Filing Date: October 27, 2010	:	
Attorney Docket No. 26786A	:	

This is a decision on the petition under the unintentional provisions of 37 CFR 1.137(b), filed August 08, 2011, to revive the above-identified application.

The petition is **GRANTED**.

The application became abandoned for failure to reply in a timely manner to the Notice to File Corrected Application Papers mailed November 16, 2010. The Notice set a period for reply of two (2) months from the mail date of the Notice. No extensions of time under the provisions of 37 CFR 1.136(a) was obtained. Accordingly, the application became abandoned on January 17, 2011.

The petition satisfies the requirements of 37 CFR 1.137(b) in that petitioner has supplied (1) the reply in the form of replacement drawings; (2) the petition fee of $1,620.00; and (3) a proper statement of unintentional delay. Accordingly, the reply to the Notice to File Corrected Application Papers of November 16, 2010 is accepted as having been unintentionally delayed.

It is not apparent whether the person signing the statement of unintentional delay was in a position to have firsthand or direct knowledge of the facts and circumstances of the delay at issue. Nevertheless, such statement is being treated as having been made as the result of a reasonable inquiry into the facts and circumstances of such delay. See 37 CFR 10.18(b) and Changes to Patent Practice and Procedure; Final Rule Notice, 62 Fed. Reg. 53131, 53178 (October 10, 1997), 1203 Off. Gaz. Pat. Office 63, 103 (October 21, 1997). In the event that such an inquiry has not been made, petitioner must make such an inquiry. If such inquiry results

in the discovery that it is not correct that the entire delay in filing the required reply from the due date for the reply until the filing of a grantable petition pursuant to 37 CFR 1.137(b) was unintentional, petitioner must notify the Office.

There is no indication that the person signing the petition was ever given a power of attorney to prosecute the application. If the person signing the petition desires to receive future correspondence regarding this application, the appropriate power of attorney document must be submitted.

Telephone inquiries concerning this decision should be directed to Michelle R. Eason at 571-272-4231.

This application is being referred to the Office Patent Application Processing for further processing.

Michelle R. Eason
Paralegal Specialist
Office of Petitions

UNITED STATES PATENT AND TRADEMARK OFFICE

Commissioner for Patents
United States Patent and Trademark Office
P.O. Box 1450
Alexandria, VA 22313-1450
www.uspto.gov

Decision Date : May 19,2011

In re Application of :

Sam Heidari

Application No : 12913200

Filed : 27-Oct-2010

Attorney Docket No : 63832-8027.US01

DECISION ON REQUEST TO WITHDRAW AS ATTORNEY/AGENTOF RECORD

This is an electronic decision on the Request to Withdraw as attorney or agent of record under 37 CFR § 1.36(b), filed May 19,2011

The request is **APPROVED.**

The request was signed by Jordan M. Becker (registration no. 39602) on behalf of all attorneys/agents associated with Customer Number 22918 . All attorneys/agents associated with Cusotmer Number 22918 have been withdrawn.

Since there are no remaining attorneys of record, all future communications from the Office will be directed to the first named inventor or assignee that has properly made itself of record pursuant to 37 CFR 3.71, with correspondence address:

Name	Quantenna Coummunications, Inc.
Name2	
Address 1	3450 W. Warren Avenue
Address 2	
City	Fremont
State	CA
Postal Code	94538
Country	US

As a reminder, requester is required to inform the first named inventor or assignee that has properly made itself of record pursuant to 37 CFR 3.71 of the electronically processed petition.

Telephone inquiries concerning this decision should be directed to the Patent Electronic Business Center (EBC) at 866-217-9197.

Office of Petitions

Doc Code: PET.AUTO **Document Description: Petition automatically granted by EFS-Web**	PTO/SB/83 U.S. Patent and Trademark Office Department of Commerce

Electronic Petition Request	**REQUEST FOR WITHDRAWAL AS ATTORNEY OR AGENT AND CHANGE OF CORRESPONDENCE ADDRESS**
Application Number	12913200
Filing Date	27-Oct-2010
First Named Inventor	Sam Heidari
Art Unit	2469
Examiner Name	
Attorney Docket Number	63832-8027.US01
Title	CHANNEL SCANNING AND CHANNEL SELECTION IN A WIRELESS COMMUNICATION NETWORK

◉ Please withdraw me as attorney or agent for the above identified patent application and the practitioners of record associated with Customer Number: 22918

The reason(s) for this request are those described in 37 CFR:

10.40(b)(4)

Certifications

☒ I/We have given reasonable notice to the client, prior to the expiration of the response period, that the practitioner(s) intend to withdraw from employment

☒ I/We have delivered to the client or a duly authorized representative of the client all papers and property (including funds) to which the client is entitled

☒ I/We have notified the client of any responses that may be due and the time frame within which the client must respond

Change the correspondence address and direct all future correspondence to the first named inventor or assignee that has properly made itself of record pursuant to 37 CFR 3.71:

Name	Quantenna Coummunications, Inc.
Address	3450 W. Warren Avenue
City	Fremont
State	CA
Postal Code	94538
Country	US

I am authorized to sign on behalf of myself and all withdrawing practitioners.	
Signature	/Jordan M. Becker/
Name	Jordan M. Becker
Registration Number	39602

UNITED STATES PATENT AND TRADEMARK OFFICE

Commissioner for Patents
United States Patent and Trademark Office
P.O. Box 1450
Alexandria, VA 22313-1450
www.uspto.gov

Sheppard, Mullin, Richter & Hampton, LLP
390 Lytton Avenue
Palo Alto, CA 94301

MAILED
NOV 07 2011
OFFICE OF PETITIONS

In re Application of	:	
Sam Heidari et al.	:	
Application No. 12/913,200	:	DECISION ON PETITION
Filed: October 27, 2010	:	TO WITHDRAW
Attorney Docket No. 25DX-162263	:	FROM RECORD
	:	

This is a decision on the Request to Withdraw as attorney or agent of record under 37 C.F.R. § 1.36(b), filed October 21, 2011.

The request is **moot because a revocation of power of attorney has been filed.**

A review of the file record indicates that the power of attorney to Sheppard, Mullin, Richter & Hampton, LLP and all attorneys/agents of record has been revoked by the assignee of the patent application on October 23, 2011. Accordingly, the request to withdraw under 37 C.F.R. § 1.36(b) is moot.

All future communications from the Office will continue to be directed to the below-listed address until otherwise notified by applicant.

Telephone inquires concerning this decision should be directed to Kimberly Inabinet at 571-272-4618.

/Kimberly Inabinet/

Kimberly Inabinet
Petitions Examiner
Office of Petitions

cc: IP Creators
P.O. Box 2789
Cupertino, CA 95015

UNITED STATES PATENT AND TRADEMARK OFFICE

Commissioner for Patents
United States Patent and Trademark Office
P.O. Box 1450
Alexandria, VA 22313-1450
www.uspto.gov

MAILED
MAR 30 2011
OFFICE OF PETITIONS

THE MARBURY LAW GROUP, PLLC
11800 SUNRISE VALLEY DRIVE
SUITE 1000
RESTON VA 20191

In re Application of	:	
Waite, et al.	:	
Application No. 12/913,230	:	DECISION ACCORDING STATUS
Filed: October 27, 2010	:	UNDER 37 CFR 1.47(a)
Attorney Docket No. 2008-026	:	
	:	

This is in response to petition under 37 CFR 1.47(b), filed February 7, 2011, which is properly treated as a petition under 37 CFR 1.47(a).[1]

The petition under 37 CFR 1.47(a) is **GRANTED**.

Rule 47 applicant has stated that a copy of the application papers were forwarded to inventor Terry Fischer. In support thereof, petitioner has included a copy of an e-mail transmitting the papers. However, according to Rule 47 applicant, Fisher did not respond.

While Rule 47 applicant did not provide a statement of the last known address of Fisher, it is presumed to be the address listed on the declaration. Applicant should inform the Office if this is not correct.

---

[1] A petition under 37 CFR 1.47(b) is only applicable when all of the inventors have refused to sign the oath or declaration.

The above-identified application and papers have been reviewed and found to be in compliance with 37 CFR 1.47(a). Accordingly, the above-identified application is hereby accorded Rule 1.47(a) status.

As provided in 37 CFR 1.47(c), this Office will forward notice of this application's filing to the non-signing inventor at the last known address provided in the petition. Notice of the filing of this application will also be published in the Official Gazette.

The $200 petition fee has been charged to Deposit Account No. 18-1579, as authorized.

The application is being forwarded to the Office of Patent Application Processing for pre-examination processing.

Telephone inquiries regarding this decision should be directed to the undersigned at (571)272-3207.

Cliff Congo
Petitions Attorney
Office of Petitions

UNITED STATES PATENT AND TRADEMARK OFFICE

Commissioner for Patents
United States Patent and Trademark Office
P.O. Box 1450
Alexandria, VA 22313-1450
www.uspto.gov

TERRY FISCHER
4908 PIONEER TRAIL
MANTUA OH 44255

MAILED
MAR 30 2011
OFFICE OF PETITIONS

In re Application of Waite, et al. Application No. 12/913,230 Filed: October 27, 2010 Title: Transportable Wastewater Treatment Tank	: : : : : : :	LETTER

Dear Mr. Fisher:

You are named as a joint inventor in the above-identified United States patent application filed under the provisions of 35 USC 116 (United States Code) and 37 CFR 1.47(a), Rules of Practice in Patent Cases. Should a patent be granted on the application you will be designated therein as a joint inventor.

As a joint inventor, you are entitled to inspect any paper in the file wrapper of the application, order copies of all or any part thereof (at a prepaid cost per 37 CFR 1.19) or make your position of record in the application. Alternatively, you may arrange to do any of the preceding through a registered patent attorney or agent presenting written authorization from you. If you care to join the application, agent of record would presumably assist you. Joining in the application would entail the filing of an appropriate oath or declaration by you pursuant to 37 CFR 1.63.

Telephone inquiries regarding this communication should be directed to Petitions Attorney Cliff Congo at (571)272-3207. Requests for information regarding your application should be directed to the File Information Unit at (703) 308-2733. Information regarding how to pay for and order a copy of the application, or a specific paper in the application, should be directed to the Certification Division at (703) 308-9726 or 1-800-972-6382 (outside the Washington D.C. area).

Cliff Congo
Petitions Attorney
Office of Petitions

UNITED STATES PATENT AND TRADEMARK OFFICE

Commissioner for Patents
United States Patent and Trademark Office
P.O. Box 1450
Alexandria, VA 22313-1450
www.uspto.gov

Schwabe Williamson & Wyatt
PACWEST CENTER, SUITE 1900
1211 SW FIFTH AVENUE
PORTLAND OR 97204

MAILED

FEB 14 2011

OFFICE OF PETITIONS

In re Application of	:	
Stanley Andersen	:	
Application No. 12/913,280	:	DECISION ON PETITION
Filed: October 27, 2010	:	TO WITHDRAW
Attorney Docket No. **110397-178568**	:	FROM RECORD

This is a decision on the Request to Withdraw as attorney or agent of record under 37 CFR § 1.36(b), filed January 5, 2011.

The request is **NOT APPROVED**.

A grantable request to withdraw as attorney/agent of record must be signed by every attorney/agent seeking to withdraw or contain a clear indication that one attorney is signing on behalf of another/others. The Office requires the practitioner(s) requesting withdrawal to certify that he, she, or they have: (1) given reasonable notice to the client, prior to the expiration of the response period, that the practitioner(s) intends to withdraw from employment; (2) delivered to the client or a duly authorized representative of the client all papers and property (including funds) to which the client is entitled; and (3) notified the client of any responses that may be due and the time frame within which the client must respond , pursuant to 37 CFR 10.40.

The request is not approved because the practitioner(s) lacks items (1) and (2) certifications mention above that is required under 37 CFR 10.40.

The Office will only accept correspondence address changes to the most current address information provided for the assignee of the entire interest *who properly became of record under 37 CFR 3.71,* or, if no assignee of the entire interest has properly been made of record, the most current address information provided for the first named inventor. 37 CFR 3.71(c) states:

> *An assignee becomes of record either in a national patent application or a reexamination proceeding by filing a statement in compliance with § 3.73(b) that is signed by a party who is authorized to act on behalf of the assignee.*

The assignee must establish its ownership of the patent to the satisfaction of the Director. In this regard, the statement under 37 CFR 3.73(b) must have either: (i) documentary evidence of a chain of title from the original owner to the assignee (*e.g.*, copy of an executed assignment), and a statement affirming that the documentary evidence of the chain of title from the original owner to the assignee was or concurrently is being submitted for recordation pursuant to § 3.11; or (ii) a statement specifying where documentary evidence of a chain of title from the original owner to the assignee is recorded in the assignment records of the Office (*e.g.*, reel and frame number).

All future communications from the Office will continue to be directed to the above-listed address until otherwise notified by applicant.

Telephone inquires concerning this decision should be directed to the undersigned at (571) 272-4584.

/JoAnne Burke/
JoAnne Burke
Petitions Examiner
Office of Petitions

UNITED STATES PATENT AND TRADEMARK OFFICE

Commissioner for Patents
United States Patent and Trademark Office
P.O. Box 1450
Alexandria, VA 22313-1450
www.uspto.gov

Schwabe Williamson & Wyatt
PACWEST CENTER, SUITE 1900
1211 SW FIFTH AVENUE
PORTLAND OR 97204

MAILED

MAR 28 2011

OFFICE OF PETITIONS

In re Application of :

Stanley Andersen :
Application No. 12/913,280 : DECISION ON PETITION
Filed: October 27, 2010 : TO WITHDRAW
Attorney Docket No. **110397-178568** : FROM RECORD

This is a decision on the renewed Request to Withdraw as attorney or agent of record under 37 CFR § 1.36(b), filed February 28, 2011.

The request is **APPROVED**.

A grantable request to withdraw as attorney/agent of record must be signed by every attorney/agent seeking to withdraw or contain a clear indication that one attorney is signing on behalf of another/others. The Office requires the practitioner(s) requesting withdrawal to certify that he, she, or they have: (1) given reasonable notice to the client, prior to the expiration of the response period, that the practitioner(s) intends to withdraw from employment; (2) delivered to the client or a duly authorized representative of the client all papers and property (including funds) to which the client is entitled; and (3) notified the client of any responses that may be due and the time frame within which the client must respond , pursuant to 37 CFR 10.40.

The request was signed by Steven J. Prewitt on behalf of all attorneys of record who are associated with Customer Number 25943.

All attorneys/agents associated with Customer Number 25943 have been withdrawn. Applicant is reminded that there is no attorney of record at this time.

The correspondence address of record has been changed and all future correspondence will be directed to the first named inventor Stanley Andersen at the address indicated below.

There is no outstanding Office action mailed that requires a reply from the applicant.

Telephone inquiries concerning this decision should be directed to the undersigned at 571-272-4584.

/JoAnne Burke/
JoAnne Burke
Petitions Examiner
Office of Petitions

cc: Stanley Andersen
251 Spragus Landing Road
Stevenson, WA 98648

UNITED STATES PATENT AND TRADEMARK OFFICE

Commissioner for Patents
United States Patent and Trademark Office
P.O. Box 1450
Alexandria, VA 22313-1450
www.uspto.gov

DORITY & MANNING, P.A.
POST OFFICE BOX 1449
GREENVILLE SC 29602-1449

MAILED

JAN 12 2011

OFFICE OF PETITIONS

In re Application of	:	
Rajala et al.	:	
Application No. 12/913334	:	DECISION GRANTING
Filing or 371(c) Date: 10/27/2010	:	STATUS UNDER
Attorney Docket No.	:	37 CFR 1.47(a)
KCX-800-DV2CN1CPCON	:	

This is in response to the Petition Under 37 CFR § 1.47(a), filed October 27, 2010. Applicant files a copy of a Decision granting a petition according status under 37 CFR 1.47(a) in prior application, no. 12/240262, of which the above-identified application is a Continuation application. A review of the oath/declaration filed with the application papers on October 27, 2010, reveal that the oath/declaration is a copy of the oath/declaration from prior application 11/240262.

As provided in 37 CFR 1.63(d)

> (1) A newly executed oath or declaration is not required under § 1.51(b)(2) and § 1.53(f) in a continuation or divisional application, provided that:
> (i) The prior nonprovisional application contained an oath or declaration as prescribed by paragraphs (a) through (c) of this section;
> (ii) The continuation or divisional application was filed by all or by fewer than all of the inventors named in the prior application;
> (iii) The specification and drawings filed in the continuation or divisional application contain no matter that would have been new matter in the prior application; and
> (iv) A copy of the executed oath or declaration filed in the prior application, showing the signature or an indication thereon that it was signed, is submitted for the continuation or divisional application.
> (2) The copy of the executed oath or declaration submitted under this paragraph for a continuation or divisional application must be accompanied by a statement requesting the deletion of the name or names of the person or persons who are not inventors in the continuation or divisional application.
> (3) Where the executed oath or declaration of which a copy is submitted for a continuation or divisional application was originally filed in a prior application accorded status under § 1.47, the copy of the executed oath or declaration

for such prior application must be accompanied by:
(i) A copy of the decision granting a petition to accord § 1.47 status to the prior application, unless all inventors or legal representatives have filed an oath or declaration to join in an application accorded status under § 1.47 of which the continuation or divisional application claims a benefit under 35 U.S.C. 120, 121, or 365(c); and
(ii) If one or more inventor(s) or legal representative(s) who refused to join in the prior application or could not be found or reached has subsequently joined in the prior application or another application of which the continuation or divisional application claims a benefit under 35 U.S.C. 120, 121, or 365(c), a copy of the subsequently executed oath(s) or declaration(s) filed by the inventor or legal representative to join in the application.

The above-identified application and papers have been reviewed and found in compliance with 37 CFR 1.63(d). This application is hereby accorded Rule 1.47(a) status. The Office will dispense with the Notice to the nonsigning inventor and the announcement in the Official Gazette.[1].

The application file is being referred to Technology Center Art Unit 3761 for examination in the normal course of business.

Telephone inquiries related to this decision may be directed to the undersigned at (571) 272-3232.

/DLW/

Derek L. Woods
Attorney
Office of Petitions

[1] See 37 CFR 1.47(c) and MPEP 201.06(c).

UNITED STATES PATENT AND TRADEMARK OFFICE

UNITED STATES DEPARTMENT OF COMMERCE
United States Patent and Trademark Office
Address: COMMISSIONER FOR PATENTS
P.O. Box 1450
Alexandria, Virginia 22313-1450
www.uspto.gov

APPLICATION NO.	FILING DATE	FIRST NAMED INVENTOR	ATTORNEY DOCKET NO.	CONFIRMATION NO.
12/913,345	10/27/2010	Kevin Geisner	MSFT-6709/326248.03	3703

41505 7590 12/15/2010
WOODCOCK WASHBURN LLP (MICROSOFT CORPORATION)
CIRA CENTRE, 12TH FLOOR
2929 ARCH STREET
PHILADELPHIA, PA 19104-2891

EXAMINER
LO, WEILUN

ART UNIT	PAPER NUMBER
2179	

NOTIFICATION DATE	DELIVERY MODE
12/15/2010	ELECTRONIC

Please find below and/or attached an Office communication concerning this application or proceeding.

The time period for reply, if any, is set in the attached communication.

Notice of the Office communication was sent electronically on above-indicated "Notification Date" to the following e-mail address(es):

eofficemonitor@woodcock.com

UNITED STATES PATENT AND TRADEMARK OFFICE

Commissioner for Patents
United States Patent and Trademark Office
P.O. Box 1450
Alexandria, VA 22313-1450
www.uspto.gov

WOODCOCK WASHBURN LLP (MICROSOFT CORPORATION)
CIRA CENTRE, 12TH FLOOR
2929 ARCH STREET
PHILADELPHIA PA 19104-2891

In re Application of:
GEISNER, Kevin et al.
Serial No.: 12/913,345
Filed: October 27, 2010
Docket: **MSFT-6709/326248.03**
Title:
SHOW BODY POSITION

DECISION ON PETITION TO MAKE SPECIAL FOR NEW APPLICATION UNDER 37 C.F.R. § 1.102 & M.P.E.P. § 708.02

This is a decision on the petition filed on October 27, 2010 to make the above-identified application special for accelerated examination procedure under 37 C.F.R. § 1.102(d).

The petition to make the application special is **DISMISSED**.

REGULATION AND PRACTICE

A grantable petition to make special under 37 C.F.R. § 1.102(d) and pursuant to the "Change to Practice for Petitions in Patent Applications to Make Special and for Accelerated Examination" published in the Federal Register on June 26, 2006 (71 Fed. Reg. 36323), must satisfy the following conditions:

I. Conditions Regarding the Application:

1. the application must be a non-reissue utility or design application filed under 37 CFR 1.111(a);

2. the application, the petition and the required fees must be filed electronically using the USPTO's electronic filing system (EFS), or EFS-web; if not filed electronically, a statement asserting that EFS and EFS-web were not available during the normal business hours.

3. at the time of filing, the application must be complete under 37 CFR 1.51 and in condition for examination;

4. The application must contain three or fewer independent claims and twenty or fewer total claims and the claims must be directed to a single invention.

II. Conditions Regarding the Petition:

The petition must:

1. be filed with the application;

2. include a statement that applicant agrees not to separately argue the patentability of any independent claim during any appeal in the application;

3. include a statement that applicant agrees to make an election without traverse in a telephone interview.

4. include a statement that applicant agrees to conduct such an interview when requested by the examiner.

5. include a statement, made based on a good faith belief, that a preexamination search in compliance with the following requirements, was conducted, including an identification of the filed of search by United States class and subclass, where applicable, and for database searches, the search logic or chemical structure or sequence used as a query, the name of the file(s) searched and the database service, and the date of the search.

The preexamination search must:

5.1 involve U.S. patents and patent application publications, foreign patent documents, and non-patent literature, unless the applicant can justify with reasonable certainty that no references more pertinent than those already identified are likely to be found in the eliminated sources and includes such a justification with this statement;

5.2. be directed to the claimed invention and encompass all of the features of the claims, giving the claims the broadest reasonable expectation;

5.3. encompass the disclosed features that may be claimed.

6. must provide in support of the petition an accelerated examination support document. An accelerated examination support document must include:

6.1. an information disclosure statement (IDS) in compliance with 37 CFR 1.98 citing each reference deemed most closely related to the subject matter of each of the claims;

6.2. an identification of all the limitations in the claims that are disclosed by the reference specifying where the limitation is disclosed in the cited reference;

6.3. a detailed explanation of how each of the claims are patentable over the references cited with particularity required by 37 CFR 1.111(b) and (c);

6.4. a concise statement of the utility of the invention as defined in each of the independent claims (unless the application is a design application);

6.5. a showing of where each limitation of the claims finds support under 35 USC 112, first paragraph, in the written description of the specification. If applicable, the showing must also identify: (1) each means- (or step) plus-function claim element that invokes consideration under 35 UDC 112, sixth paragraph; and (2) the structure, material, or acts in the specification that corresponds to each means- (or step) plus-function claim element that invokes consideration under 35 UDC 112, sixth paragraph; if the application claims the benefit of one or more applications under title 35, United States Code, the showing must also include where each limitation of the claims finds support under 35 USC 112, first paragraph, in each such application in which such supports exists;

6.6. an identification of any cited references that may be disqualified under 35 USC 103(c).

REVIEW OF FACTS

The conditions I1-I4, II1-II5, II5.1, II5.2, II6.1-II6.4, and II6.6 above are considered to have been met.

However, the petition fails to comply with conditions II5.3 and II6.5 above, for the reasons listed below. Therefore, the petition fails to meet the required conditions to be accorded special status under the accelerated examination procedure.

ANALYSIS

Item II5.3 states that the "pre-examination search must: [ ] encompass the disclosed features that may be claimed." Upon carefully reviewing the pre-examination search statement and the accelerated examination support document, no evidence or statement can be found with respect to searching "the disclosed features that may be claimed."

A requirement under item II.6.5 is that "if the application claims the benefit of one or more applications under title 35, United States Code, the showing must also include where each limitation of the claims finds support under 35 USC 112, first paragraph, in each such application in which such supports exists." The instant application is a continuation of 12/434,545, accordingly, in order to comply with this item, the accelerated examination support document must include where each limitation of the claims finds support under 35 USC 112, first paragraph, in the specification of the parent application.

DECISION

For the above-stated reasons, the petition is **DISMISSED**.

Petitioner is given a single opportunity to perfect the petition. Any request for reconsideration of this decision must be submitted within 1 (one) month or 30 (thirty) days, whichever is longer, (no extension of time under 37 CFR 1.136(a)) from the date of this decision in order to be considered timely. Any request for reconsideration must address the deficiencies indicated above.

Petitioner is reminded that, upon granting of the special status of the application on request for reconsideration, the application will be processed expeditiously. However, due to the dismissal of the instant petition, examination may not be completed within twelve months of the filing date of the application.

Any inquiry regarding this decision should be directed to Eddie C. Lee at (571) 272-1732.

/Eddie C. Lee/

Eddie C. Lee
Quality Assurance Specialist
Technology Center 2100

UNITED STATES PATENT AND TRADEMARK OFFICE

UNITED STATES DEPARTMENT OF COMMERCE
United States Patent and Trademark Office
Address: COMMISSIONER FOR PATENTS
P.O. Box 1450
Alexandria, Virginia 22313-1450
www.uspto.gov

APPLICATION NO.	FILING DATE	FIRST NAMED INVENTOR	ATTORNEY DOCKET NO.	CONFIRMATION NO.
12/913,345	10/27/2010	Kevin Geisner	MSFT-6709/326248.03	3703

41505 7590 01/31/2011
WOODCOCK WASHBURN LLP (MICROSOFT CORPORATION)
CIRA CENTRE, 12TH FLOOR
2929 ARCH STREET
PHILADELPHIA, PA 19104-2891

EXAMINER
LO, WEILUN

ART UNIT	PAPER NUMBER
2179	

NOTIFICATION DATE	DELIVERY MODE
01/31/2011	ELECTRONIC

Please find below and/or attached an Office communication concerning this application or proceeding.

The time period for reply, if any, is set in the attached communication.

Notice of the Office communication was sent electronically on above-indicated "Notification Date" to the following e-mail address(es):

eofficemonitor@woodcock.com

UNITED STATES PATENT AND TRADEMARK OFFICE

Commissioner for Patents
United States Patent and Trademark Office
P.O. Box 1450
Alexandria, VA 22313-1450
www.uspto.gov

WOODCOCK WASHBURN LLP (MICROSOFT CORPORATION)
CIRA CENTRE, 12TH FLOOR
2929 ARCH STREET
PHILADELPHIA PA 19104-2891

In re Application of: GEISNER, Kevin, et al. Serial No.: 12/913,345 Filed: October 27, 2010 Docket: **MSFT-6709/326248.03** Title: **SHOW BODY POSITION**	DECISION ON PETITION TO MAKE SPECIAL FOR NEW APPLICATION UNDER 37 C.F.R. § 1.102 & M.P.E.P. § 708.02

This is a decision on the request for reconsideration of the petition to make special filed on October 27, 2010 to make the above-identified application special for accelerated examination procedure under 37 C.F.R. § 1.102(d). The decision herein is pursuant to the filing of the request for reconsideration dated January 12, 2011.

The petition to make the application special is **GRANTED**.

The application is eligible for accelerated examination and the petition complies with the conditions for granting the application special status pursuant to the "Change to Practice for Petitions in Patent Applications to Make Special and for Accelerated Examination" issued June 26, 2006, in the Federal Register. (71 Fed. Reg. 36323).

The prosecution of the instant application will be conducted expeditiously according to the following guidelines.

1. The application will be docketed to an examiner and taken up for action within two weeks of the date of this decision.

2. Restriction Practice:
   If the examiner determines that the claims are not directed to a single invention, a telephone request to elect one single invention will be made pursuant to MPEP 812.01. As a prerequisite to the grant of this petition, the applicant has agreed to make an oral election, by telephone, without traverse. If the applicant refuses to make an election without traverse, or the examiner cannot reach the applicant after a reasonable effort, the

examiner will treat the first claimed invention (invention defined by claim 1) as having being constructively elected without traverse for examination.

3. Office action:
If it is determined that, after appropriate consultation, there is a potential rejection or any other issue to be addressed, the examiner will telephone the applicant and arrange an interview to discuss and resolve the issue. An Office action, other than a Notice of Allowance and Fee(s) Due (Notice of Allowance), will not be issued unless either: 1) an interview was conducted but did not result in agreed to action that places the application in condition for allowance, or, 2) a determination is made that an interview would be unlikely to result in the application being placed in condition for allowance, and 3) an internal conference has been held to review any rejection of any claim.

4. Time for Reply:
An Office action other than a Notice of Allowance or a final Office action will set a shortened statutory period of one month or thirty days, whichever is longer, for reply with no extension of time available under 37 CFR 1.136(a). Failure to timely file a reply within this non-extendible period for reply will result in the abandonment of the application.

5. Reply by Applicant:
A timely reply to an Office action other than the Notice of Allowance must be submitted electronically via EFS or EFS-web and limited to addressing the rejections, objections and requirement made. Any amendment that attempts to: 1) add claims which would result in more than three pending independent claims or more than twenty pending total claims; 2) present claims not encompassed by the pre-examination search or an updated accelerated examination support document; or 3) present claims that are directed a non-elected invention or an invention other than that previously claimed and examined in the application, will be treated as not fully responsive and will not be entered.

For any amendment to the claims (including any new claim) that is not encompassed by the accelerated examination support document, applicant must provide an updated accelerated examination support document that encompasses the amended or new claims at the time of filing of the amendment.

To proceed expeditiously with the examination, it is recommended that a reply with amendments made to any claim or with any new claim being added be accompanied by an updated accelerated examination support document or a statement explaining how the amended or new claim is supported by the original accelerated examination support document.

6. Information Disclosure Statement (IDS):
   Any IDS filed during prosecution must be submitted electronically via EFS or EFS-web, accompanied by an updated accelerated examination support document, and be in compliance with 37 CFR 1.97 and 1.98.

7. Post-Allowance Processing:
   To expedite processing of the allowed application into a patent, the applicant must: 1) pay the required fees within one month of the date of the Notice of Allowance, and 2) not file any post allowance papers not required by the Office. In no event may the issue fee be paid and accepted later than three months from the date of the Notice of Allowance.

8. After-Final and Appeal Procedures:
   To expedite prosecution, after receiving the final Office action, applicant must: 1) promptly file a notice of appeal, an appeal brief and appeal fees; and 2) not request a pre-appeal brief conference.

   Any amendment, affidavit or other evidence filed after final Office action must comply with applicable rules and the requirements outlined in numbered paragraphs 5 and 6 above.

   On appeal, the application will proceed according to normal appeal procedures. After appeal, the application will again be treated special.

9. Proceedings Outside the Normal Examination Process:
   If the application becomes involved in a proceeding that is outside the normal examination process (e.g., a secrecy order, national security review, interference proceeding, petitions under 37 CFR 1.181, 182 or 183), the application will be treated special before and after such proceeding.

10. Final Disposition:
    The twelve month goal of this accelerated examination procedure ends with a final disposition. The mailing of a final Office action, a Notice of Allowance, the filing of a Notice of Appeal, or the filing of a Request for Continued Examination (RCE) is the final disposition.

If, during prosecution, a paper is not filed electronically using EFS-web, a reply is filed but is not fully responsive, the application is involved in an appeal, or a proceeding outside normal examination process, the application will still be examined expeditiously, however, the final disposition may occur more than twelve months from the filing of the application.

Any inquiry regarding this decision should be directed to Eddie C. Lee at (571) 272-1732.

/Eddie C. Lee/

Eddie C. Lee
Quality Assurance Specialist
Technology Center 2100

Doc Code: PET.GREEN
Document Description: Petition for Green Tech Pilot

PTO/SB/420 (03-11)

PETITION TO MAKE SPECIAL UNDER THE GREEN TECHNOLOGY PILOT PROGRAM

Attorney Docket Number: 245667_1	Application Number (if known): 12/913,357	Filing date: 10-27-2010

First Named Inventor: Scott Daniel Feldman-Peabody

Title: METHODS OF FORMING A CONDUCTIVE TRANSPARENT OXIDE FILM LAYER FOR USE IN A CADMIUM TELLURIDE BASED THIN FILM PHOTOVOLTAIC DEVICE

APPLICANT HEREBY REQUESTS TO PARTICIPATE IN THE GREEN TECHNOLOGY PILOT PROGRAM FOR THE ABOVE-IDENTIFIED APPLICATION. See Instruction Sheet on page 2.

This petition must be timely filed electronically using the USPTO electronic filing system, EFS-Web.

1. By filing this petition:

   Applicant is requesting early publication: Applicant hereby requests early publication under 37 CFR 1.219 and the publication fee set forth in 37 CFR 1.18(d) accompanies this request.

2. By filing this petition: applicant is agreeing to make an election without traverse in a telephonic interview and elect an invention that meets the eligibility requirements for the Green Technology Pilot Program, if the Office determines that the claims are not obviously directed to a single invention. See Instruction Sheet.

3. This request is accompanied by statements of special status for the eligibility requirement.

4. The application contains no more than three (3) independent claims and twenty (20) total claims.

5. The application does not contain any multiple dependent claims.

6. Other attachments: Statement Concerning the Basis for the Special Status

Signature /Allison W. Mages/	Date 10/10/11
Name (Print/Typed) Allison W. Mages	Registration Number 57,275

Note: *Signatures of all the inventors or assignees of record of the entire interest or their representative(s) are required in accordance with 37 CFR 1.33 and 11.18. Please see 37 CFR 1.4(d) for the form of the signature. If necessary, submit multiple forms for more than one signature, see below*.*

☐ *Total of..... forms are submitted.

If you need assistance in completing the form, call 1-800-PTO-9199 and select option 2.

IN THE UNITED STATES PATENT AND TRADEMARK OFFICE

First Named Inventor: Scott Daniel Feldman-Peabody	)
Confirmation No.: 3723	)
	)
Serial No.: 12/913,357	)
	)
Filing Date: October 27, 2010	)
	)
Atty Docket No.: 245667_1	)

VIA EFS
Commissioner for Patents
P.O. Box 1450
Alexandria, VA 22313-1450

Statement Concerning the Basis for the Special Status

SIR:

The application relates generally to cadmium sulfide thin film layers and their methods of deposition. More particularly, the subject matter disclosed herein relates to cadmium sulfide layers for use in cadmium telluride thin film photovoltaic devices and their methods of manufacture. (See [0001])

Applicant respectfully submits that Special Status is sought on the basis that the present invention materially contributes to the discovery or development of renewable energy resources

The undersigned representative may be contacted at the number below to facilitate the resolution of any matters. Please charge any fees that are incurred in connection with this Statement to deposit account no. 09-0470.

Respectfully submitted,

General Electric Company

By : /Allison W. Mages/

Allison W. Mages
Reg. No. 57,275

Dated: October 10, 2011

GE Global Patent Operation
2 Corporate Drive, Suite 648
Shelton, CT 06484
203-944-6730

UNITED STATES PATENT AND TRADEMARK OFFICE

UNITED STATES DEPARTMENT OF COMMERCE
United States Patent and Trademark Office
Address: COMMISSIONER FOR PATENTS
P.O. Box 1450
Alexandria, Virginia 22313-1450
www.uspto.gov

APPLICATION NO.	FILING DATE	FIRST NAMED INVENTOR	ATTORNEY DOCKET NO.	CONFIRMATION NO.
12/913,357	10/27/2010	Scott Daniel Feldman-Peabody	245667_1	3723

93081 7590 11/09/2011
Dority & Manning, P.A. and Primestar Solar Inc.
Post Office Box 1449
Greenville, SC 29602

EXAMINER

ART UNIT	PAPER NUMBER
1724	

MAIL DATE	DELIVERY MODE
11/09/2011	PAPER

Please find below and/or attached an Office communication concerning this application or proceeding.

The time period for reply, if any, is set in the attached communication.

UNITED STATES PATENT AND TRADEMARK OFFICE

Commissioner for Patents
United States Patent and Trademark Office
P.O. Box 1450
Alexandria, VA 22313-1450
www.uspto.gov

11/9/11

Dority & Manning, P.A. and Primestar Solar Inc.
Post Office Box 1449
Greenville SC 29602

In re Application of	:	
Feldman-Peabody et al.	:	DECISION ON PETITION
Application No. 12/913,357	:	TO MAKE SPECIAL UNDER
Filed: 10/27/2010	:	THE GREEN TECHNOLOGY
Attorney Docket No. **245667_1**	:	PILOT PROGRAM

This is a decision on the petition under 37 CFR 1.102, filed 10/10/2011, to make the above-identified application special under the pilot program for applications pertaining to Green Technologies as set forth in 74 Federal Register Notice 64666 (December 8, 2009) and amended by 75 Federal Register Notice 28554 (May 21, 2010) and 75 Federal Register Notice 69049 (November 10, 2010).

The petition is **GRANTED**.

A grantable petition to make an application special under 37 CFR 1.102 and the pilot program as set forth in 74 FR 64666 must be directed to a nonprovisional application filed under 35 USC 111(a) or be a national stage entry under 35 USC 371, exclusive of any reissue applications.

In order to qualify for special status, the following requirements must be met. 1) The application must have no more than 3 independent claims and no more than 20 total claims. 2) The application must not contain any multiple dependent claims. 3) The petition must state the basis for seeking special status, i.e., the claimed invention either: A) materially enhances the quality of the environment or B) materially contributes to: i) the discovery or development of renewable energy resources, ii) the more efficient utilization and conservation of energy resources, or iii) greenhouse gas emission reduction. 4) If the disclosure is not clear on its face that the claimed invention materially contributes under category (A) or (B), the petition must be accompanied by a statement by the applicant, assignee, or an attorney/agent registered to practice before the Office explaining how the materiality standard is met. 5) A statement that applicant will agree to make an election without traverse in a telephonic interview if a restriction requirement is made by the examiner. 6) The petition to make special must be filed electronically. 7) The petition must be filed at least one day prior to the date that a first Office Action appears in the Patent Application Information Retrieval (PAIR) system. 8) The petition must be accompanied by a request for early publication in compliance with 37 CFR 1.219 and include the publication fee as set forth in 37 CFR 1.18(d).

The requirement for a fee for consideration of the petition to make special for applications pertaining to Green Technologies has been waived.

The instant petition complies with items 1 – 8 above. Accordingly, the above-identified application has been accorded "special" status.

Telephone inquires concerning this decision should be directed to Tom Dunn at 571-272-1171.

The application is being forwarded to the Technology Center Art Unit 1724 for action on the merits commensurate with this decision.

/Tom Dunn/

Tom Dunn
Quality Assurance Specialist
Technology Center 1700

UNITED STATES PATENT AND TRADEMARK OFFICE

Commissioner for Patents
United States Patent and Trademark Office
P.O. Box 1450
Alexandria, VA 22313-1450
www.uspto.gov

DORITY & MANNING, P.A.
POST OFFICE BOX 1449
GREENVILLE SC 29602-1449

MAILED

JAN 12 2011

OFFICE OF PETITIONS

In re Application of	:	
Rajala et al.	:	
Application No. 12/913362	:	DECISION GRANTING
Filing or 371(c) Date: 10/27/2010	:	STATUS UNDER
Attorney Docket No.	:	37 CFR 1.47(a)
KCX-800-DV2CN1CPCON2	:	

This is in response to the Petition Under 37 CFR § 1.47(a), filed October 27, 2010. Applicant files a copy of a Decision granting a petition according status under 37 CFR 1.47(a) in prior application, no. 12/240262, of which the above-identified application is a Continuation application. A review of the oath/declaration filed with the application papers on October 27, 2010, reveal that the oath/declaration is a copy of the oath/declaration from prior application 11/240262.

As provided in 37 CFR 1.63(d)

> (1) A newly executed oath or declaration is not required under § 1.51(b)(2) and § 1.53(f) in a continuation or divisional application, provided that:
> (i) The prior nonprovisional application contained an oath or declaration as prescribed by paragraphs (a) through (c) of this section;
> (ii) The continuation or divisional application was filed by all or by fewer than all of the inventors named in the prior application;
> (iii) The specification and drawings filed in the continuation or divisional application contain no matter that would have been new matter in the prior application; and
> (iv) A copy of the executed oath or declaration filed in the prior application, showing the signature or an indication thereon that it was signed, is submitted for the continuation or divisional application.
> (2) The copy of the executed oath or declaration submitted under this paragraph for a continuation or divisional application must be accompanied by a statement requesting the deletion of the name or names of the person or persons who are not inventors in the continuation or divisional application.
> (3) Where the executed oath or declaration of which a copy is submitted for a continuation or divisional application was originally filed in a prior application accorded status under § 1.47, the copy of the executed oath or declaration

for such prior application must be accompanied by:
(i) A copy of the decision granting a petition to accord § 1.47 status to the prior application, unless all inventors or legal representatives have filed an oath or declaration to join in an application accorded status under § 1.47 of which the continuation or divisional application claims a benefit under 35 U.S.C. 120, 121, or 365(c); and
(ii) If one or more inventor(s) or legal representative(s) who refused to join in the prior application or could not be found or reached has subsequently joined in the prior application or another application of which the continuation or divisional application claims a benefit under 35 U.S.C. 120, 121, or 365(c), a copy of the subsequently executed oath(s) or declaration(s) filed by the inventor or legal representative to join in the application.

The above-identified application and papers have been reviewed and found in compliance with 37 CFR 1.63(d). This application is hereby accorded Rule 1.47(a) status. The Office will dispense with the Notice to the nonsigning inventor and the announcement in the Official Gazette.[1].

The application file is being referred to Technology Center Art Unit 3761 for examination in the normal course of business.

Telephone inquiries related to this decision may be directed to the undersigned at (571) 272-3232.

/DLW/

Derek L. Woods
Attorney
Office of Petitions

[1] See 37 CFR 1.47(c) and MPEP 201.06(c).

UNITED STATES PATENT AND TRADEMARK OFFICE

Commissioner for Patents
United States Patent and Trademark Office
P.O. Box 1450
Alexandria, VA 22313-1450
www.uspto.gov

OBLON, SPIVAK, MCCLELLAND MAIER & NEUSTADT, L.L.P.
1940 DUKE STREET
ALEXANDRIA VA 22314

MAILED

FEB 02 2011

OFFICE OF PETITIONS

In re Application:	:	
Tong et al.	:	
Application No. 12/913,385	:	ON PETITION
Filed: October 27, 2010	:	
Attorney Docket No. 368191US20 CONT	:	

This is a notice regarding your request for acceptance of a fee deficiency submission under 37 CFR 1.28 filed December 3, 2010.

On September 1, 1998, the Court of Appeals for the Federal Circuit held that 37 CFR 1.28(c) is the sole provision governing the time for correction of the erroneous payment of the issue fee as a small entity. **See DH Technology v. Synergystex International, Inc. 154 F.3d 1333, 47 USPQ2d 1865 (Fed. Cir. Sept. 1, 1998).**

The Office no longer investigates or rejects original or reissue applications under 37 CFR 1.56. **1098 Off. Gaz. Pat. Office 502 (January 3, 1989)**. Therefore, nothing in this Notice is intended to imply that an investigation was done.

Your fee deficiency submission under 37 CFR 1.28 is hereby **ACCEPTED**.

This application is no longer entitled to small entity status. Accordingly, all future fees paid in this application must be paid at the large entity rate.

Telephone inquires concerning this decision should be directed to the undersigned at (571) 272-7751.

Joan Olszewski
Petitions Examiner
Office of Petitions

Doc Code: PET.GREEN
Document Description: Petition for Green Tech Pilot

PTO/SB/420 (03-11)

PETITION TO MAKE SPECIAL UNDER THE GREEN TECHNOLOGY PILOT PROGRAM

Attorney Docket Number: 244826_1	Application Number (if known): 12/913,419	Filing date: 10-27-2010

First Named Inventor: Scott Daniel Feldman-Peabody

Title: INTERMIXING OF CADMIUM SULFIDE LAYERS AND CADMIUM TELLURIDE LAYERS FOR THIN FILM PHOTOVOLTAIC DEVICES AND METHODS OF THEIR MANUFACTURE

APPLICANT HEREBY REQUESTS TO PARTICIPATE IN THE GREEN TECHNOLOGY PILOT PROGRAM FOR THE ABOVE-IDENTIFIED APPLICATION. See Instruction Sheet on page 2.

This petition must be timely filed electronically using the USPTO electronic filing system, EFS-Web.

1. By filing this petition:

   Applicant is requesting early publication: Applicant hereby requests early publication under 37 CFR 1.219 and the publication fee set forth in 37 CFR 1.18(d) accompanies this request.

2. By filing this petition: applicant is agreeing to make an election without traverse in a telephonic interview and elect an invention that meets the eligibility requirements for the Green Technology Pilot Program, if the Office determines that the claims are not obviously directed to a single invention. See Instruction Sheet.

3. This request is accompanied by statements of special status for the eligibility requirement.

4. The application contains no more than three (3) independent claims and twenty (20) total claims.

5. The application does not contain any multiple dependent claims.

6. Other attachments: Statement Concerning the Basis for the Special Status

Signature /Allison W. Mages/	Date 10/10/11
Name (Print/Typed) Allison W. Mages	Registration Number 57,275

Note: *Signatures of all the inventors or assignees of record of the entire interest or their representative(s) are required in accordance with 37 CFR 1.33 and 11.18. Please see 37 CFR 1.4(d) for the form of the signature. If necessary, submit multiple forms for more than one signature, see below*.*

☐ *Total of..... forms are submitted.

If you need assistance in completing the form, call 1-800-PTO-9199 and select option 2.

IN THE UNITED STATES PATENT AND TRADEMARK OFFICE

First Named Inventor: Scott Daniel Feldman-Peabody	)
Confirmation No.: 3840	)
	)
Serial No.: 12/913,419	)
	)
Filing Date: October 27, 2010	)
	)
Atty Docket No.: 244826_1	)

VIA EFS
Commissioner for Patents
P.O. Box 1450
Alexandria, VA 22313-1450

Statement Concerning the Basis for the Special Status

SIR:

The application relates generally to intermixed thin film layers containing cadmium sulfide and cadmium telluride, along with their methods of deposition. More particularly, the subject matter disclosed herein relates to intermixed thin film layers of cadmium sulfide and cadmium telluride for use in cadmium telluride thin film photovoltaic devices and their methods of manufacture. (See [0001])

Applicant respectfully submits that Special Status is sought on the basis that the present invention materially contributes to the discovery or development of renewable energy resources

The undersigned representative may be contacted at the number below to facilitate the resolution of any matters. Please charge any fees that are incurred in connection with this Statement to deposit account no. 09-0470.

Respectfully submitted,

General Electric Company

By : /Allison W. Mages/
Allison W. Mages
Reg. No. 57,275

Dated: October 10, 2011

GE Global Patent Operation
2 Corporate Drive, Suite 648
Shelton, CT 06484
203-944-6730

UNITED STATES PATENT AND TRADEMARK OFFICE

UNITED STATES DEPARTMENT OF COMMERCE
United States Patent and Trademark Office
Address: COMMISSIONER FOR PATENTS
P.O. Box 1450
Alexandria, Virginia 22313-1450
www.uspto.gov

APPLICATION NO.	FILING DATE	FIRST NAMED INVENTOR	ATTORNEY DOCKET NO.	CONFIRMATION NO.
12/913,419	10/27/2010	Scott Daniel Feldman-Peabody	244826_1	3840

93081 7590 11/09/2011
Dority & Manning, P.A. and Primestar Solar Inc.
Post Office Box 1449
Greenville, SC 29602

EXAMINER

ART UNIT	PAPER NUMBER
1725	

MAIL DATE	DELIVERY MODE
11/09/2011	PAPER

Please find below and/or attached an Office communication concerning this application or proceeding.

The time period for reply, if any, is set in the attached communication.

UNITED STATES PATENT AND TRADEMARK OFFICE

Commissioner for Patents
United States Patent and Trademark Office
P.O. Box 1450
Alexandria, VA 22313-1450
www.uspto.gov

11/09/11

Dority & Manning, P.A. and Primestar Solar Inc.
Post Office Box 1449
Greenville SC 29602

In re Application of	:	
Feldman-Peabody et al.	:	DECISION ON PETITION
Application No. 12/913,419	:	TO MAKE SPECIAL UNDER
Filed: 10/27/2010	:	THE GREEN TECHNOLOGY
Attorney Docket No. **244826_1**	:	PILOT PROGRAM

This is a decision on the petition under 37 CFR 1.102, filed 10/10/2011, to make the above-identified application special under the pilot program for applications pertaining to Green Technologies as set forth in 74 Federal Register Notice 64666 (December 8, 2009) and amended by 75 Federal Register Notice 28554 (May 21, 2010) and 75 Federal Register Notice 69049 (November 10, 2010).

The petition is **GRANTED**.

A grantable petition to make an application special under 37 CFR 1.102 and the pilot program as set forth in 74 FR 64666 must be directed to a nonprovisional application filed under 35 USC 111(a) or be a national stage entry under 35 USC 371, exclusive of any reissue applications.

In order to qualify for special status, the following requirements must be met. 1) The application must have no more than 3 independent claims and no more than 20 total claims. 2) The application must not contain any multiple dependent claims. 3) The petition must state the basis for seeking special status, i.e., the claimed invention either: A) materially enhances the quality of the environment or B) materially contributes to: i) the discovery or development of renewable energy resources, ii) the more efficient utilization and conservation of energy resources, or iii) greenhouse gas emission reduction. 4) If the disclosure is not clear on its face that the claimed invention materially contributes under category (A) or (B), the petition must be accompanied by a statement by the applicant, assignee, or an attorney/agent registered to practice before the Office explaining how the materiality standard is met. 5) A statement that applicant will agree to make an election without traverse in a telephonic interview if a restriction requirement is made by the examiner. 6) The petition to make special must be filed electronically. 7) The petition must be filed at least one day prior to the date that a first Office Action appears in the Patent Application Information Retrieval (PAIR) system. 8) The petition must be accompanied by a request for early publication in compliance with 37 CFR 1.219 and include the publication fee as set forth in 37 CFR 1.18(d).

The requirement for a fee for consideration of the petition to make special for applications pertaining to Green Technologies has been waived.

The instant petition complies with items 1 – 8 above. Accordingly, the above-identified application has been accorded "special" status.

Telephone inquires concerning this decision should be directed to Tom Dunn at 571-272-1171.

The application is being forwarded to the Technology Center Art Unit 1725 for action on the merits commensurate with this decision.

/Tom Dunn/

Tom Dunn
Quality Assurance Specialist
Technology Center 1700

Doc Code: PET.GREEN
Document Description: Petition for Green Tech Pilot

PTO/SB/420 (11-10)
Approved for use through 01/31/2011. OMB 0651-0062
U.S. Patent and Trademark Office; U. S. DEPARTMENT OF COMMERCE
Under the Paperwork Reduction Act of 1995, no persons are required to respond to a collection of information unless it displays a valid OMB control number.

PETITION TO MAKE SPECIAL UNDER THE GREEN TECHNOLOGY PILOT PROGRAM

Attorney Docket Number: 83149335(FMC3149PUS)	Application Number (if known): 12/913,421	Filing date: October 27, 2010
First Named Inventor: Marc Jonathon Lucas		
Title: Apparatus for On-Board Storage of Electric Vehicle Charging Cord		

APPLICANT HEREBY REQUESTS TO PARTICIPATE IN THE GREEN TECHNOLOGY PILOT PROGRAM FOR THE ABOVE-IDENTIFIED APPLICATION. See Instruction Sheet on page 2.

This petition must be timely filed electronically using the USPTO electronic filing system, EFS-Web.

1. By filing this petition:

   Applicant is requesting early publication: Applicant hereby requests early publication under 37 CFR 1.219 and the publication fee set forth in 37 CFR 1.18(d) accompanies this request.

2. By filing this petition: applicant is agreeing to make an election without traverse in a telephonic interview and elect an invention that meets the eligibility requirements for the Green Technology Pilot Program, if the Office determines that the claims are not obviously directed to a single invention. See Instruction Sheet.

3. This request is accompanied by statements of special status for the eligibility requirement.

4. The application contains no more than three (3) independent claims and twenty (20) total claims.

5. The application does not contain any multiple dependent claims.

6. Other attachments: Statement to Make Special

Signature /Gary A. Smith/	Date March 9, 2011
Name (Print/Typed) Gary A. Smith	Registration Number 39376

Note: *Signatures of all the inventors or assignees of record of the entire interest or their representative(s) are required in accordance with 37 CFR 1.33 and 11.18. Please see 37 CFR 1.4(d) for the form of the signature. If necessary, submit multiple forms for more than one signature see below*.*

☐ *Total of ..... forms are submitted.

The information is required to obtain or retain a benefit by the public which is to file (and by the USPTO to process) an application. Confidentiality is governed by 35 U.S.C. 122 and 37 CFR 1.11 and 1.14. This collection is estimated to take 12 hours to complete, including gathering, preparing, and submitting the completed application form to the USPTO. Time will vary depending upon the individual case. Any comments on the amount of time you require to complete this form and/or suggestions for reducing this burden, should be sent to the Chief Information Officer, U.S. Patent and Trademark Office, U.S. Department of Commerce, P.O. Box 1450, Alexandria, VA 22313-1450. DO NOT SEND FEES OR COMPLETED FORMS TO THIS ADDRESS. **SEND TO: Commissioner for Patents, P.O. Box 1450, Alexandria, VA 22313-1450.**

If you need assistance in completing the form, call 1-800-PTO-9199 and select option 2.

IN THE UNITED STATES PATENT AND TRADEMARK OFFICE

In re application of:

Marc Jonathon Lucas et al.

Group Art Unit: 3728

Examiner: Unknown

Serial No.: 12/913,421

Filed: October 27, 2010

For: Apparatus for On-Board Storage of Electric Vehicle Charging Cord

Attorney Docket No.: 83149335 (FMC 3149 PUS)

STATEMENT SUPPORTING ELIGIBILITY REQUIREMENT OF THE GREEN TECHNOLOGY PILOT PROGRAM

Commissioner for Patents
U.S. Patent and Trademark Office
P.O. Box 1450
Alexandria, VA 22313-1450

Dear Sir:

This Statement of Special Status for the Eligibility Requirement is being filed concurrently with a Petition To Make Special Under the Green Technology Pilot Program (PTO/SB/420), and pursuant to the requirements of 74 Fed. Reg. 64,666 (Dec. 8, 2009), as amended by 75 Fed. Reg. 28, 554 (May 21, 2010) and 75 Fed. Reg. 68049 (Nov. 10, 2010).

Applicant respectfully submits that the above-identified application is eligible for the "Green Technology Pilot Program" as materially contributing to the more efficient utilization and conservation of energy resources or the reduction of greenhouse gas emissions.

As explained in the specification in the Background Art section, for example, the above-identified application describes and claims an invention that increases the convenience of operation of a rechargeable electric vehicle. This solution to the problem of how and where to store a recharging cord will increase the level of customer acceptance of electric vehicles, and

thereby encourage the transition to wider use of those vehicles in the United States. Accordingly, the claimed invention materially contributes to conservation of energy resources and/or the reduction of greenhouse gas emissions.

The Application is a non-reissue, non-provisional utility application filed under 35 U.S.C. §111(a). The Application contains no more than three (3) independent claims and twenty (20) total claims. The Application does not contain multiple dependent claims. A first Office action has not yet appeared in the Patent Application Information Retrieval System (PAIR).

The publication fee under 37 C.F.R. § 1.18(d) of $300 has been paid upon filing. Please charge any additional required fees to Deposit Account No. 06-1510 (Ford Global Technologies, LLC).

Respectfully submitted,

By: /Gary A. Smith/
Gary A. Smith
Reg. No. 39,376
Attorney for Applicant

Date: March 9, 2011

BROOKS KUSHMAN P.C.
1000 Town Center, 22nd Floor
Southfield, MI 48075-1238
Phone: 248-358-4400
Fax: 248-358-3351

Doc Code: PET.GREEN
Document Description: Petition for Green Tech Pilot

PTO/SB/420 (11-10)
Approved for use through 01/31/2011. OMB 0651-0062
U.S. Patent and Trademark Office; U. S. DEPARTMENT OF COMMERCE
Under the Paperwork Reduction Act of 1995, no persons are required to respond to a collection of information unless it displays a valid OMB control number.

PETITION TO MAKE SPECIAL UNDER THE GREEN TECHNOLOGY PILOT PROGRAM

Attorney Docket Number: 83149335(FMC3149PUS)	Application Number (if known): 12/913,421	Filing date: October 27, 2010
First Named Inventor: Marc Jonathon Lucas		
Title: Apparatus for On-Board Storage of Electric Vehicle Charging Cord		

APPLICANT HEREBY REQUESTS TO PARTICIPATE IN THE GREEN TECHNOLOGY PILOT PROGRAM FOR THE ABOVE-IDENTIFIED APPLICATION. See Instruction Sheet on page 2.

This petition must be timely filed electronically using the USPTO electronic filing system, EFS-Web.

1. By filing this petition:

   Applicant is requesting early publication: Applicant hereby requests early publication under 37 CFR 1.219 and the publication fee set forth in 37 CFR 1.18(d) accompanies this request.

2. By filing this petition: applicant is agreeing to make an election without traverse in a telephonic interview and elect an invention that meets the eligibility requirements for the Green Technology Pilot Program, if the Office determines that the claims are not obviously directed to a single invention. See Instruction Sheet.

3. This request is accompanied by statements of special status for the eligibility requirement.

4. The application contains no more than three (3) independent claims and twenty (20) total claims.

5. The application does not contain any multiple dependent claims.

6. Other attachments: Statement to Make Special

Signature /Gary A. Smith/	Date March 9, 2011
Name (Print/Typed) Gary A. Smith	Registration Number 39376

Note: *Signatures of all the inventors or assignees of record of the entire interest or their representative(s) are required in accordance with 37 CFR 1.33 and 11.18. Please see 37 CFR 1.4(d) for the form of the signature. If necessary, submit multiple forms for more than one signature see below*.*

☐ *Total of ..... forms are submitted.

The information is required to obtain or retain a benefit by the public which is to file (and by the USPTO to process) an application. Confidentiality is governed by 35 U.S.C. 122 and 37 CFR 1.11 and 1.14. This collection is estimated to take 12 hours to complete, including gathering, preparing, and submitting the completed application form to the USPTO. Time will vary depending upon the individual case. Any comments on the amount of time you require to complete this form and/or suggestions for reducing this burden, should be sent to the Chief Information Officer, U.S. Patent and Trademark Office, U.S. Department of Commerce, P.O. Box 1450, Alexandria, VA 22313-1450. DO NOT SEND FEES OR COMPLETED FORMS TO THIS ADDRESS. **SEND TO: Commissioner for Patents, P.O. Box 1450, Alexandria, VA 22313-1450.**

If you need assistance in completing the form, call 1-800-PTO-9199 and select option 2.

UNITED STATES PATENT AND TRADEMARK OFFICE

UNITED STATES DEPARTMENT OF COMMERCE
United States Patent and Trademark Office
Address: COMMISSIONER FOR PATENTS
P.O. Box 1450
Alexandria, Virginia 22313-1450
www.uspto.gov

APPLICATION NO.	FILING DATE	FIRST NAMED INVENTOR	ATTORNEY DOCKET NO.	CONFIRMATION NO.
12/913,421	10/27/2010	Marc Jonathon Lucas	83149335	3842

28395 7590 03/22/2011
BROOKS KUSHMAN P.C./FGTL
1000 TOWN CENTER
22ND FLOOR
SOUTHFIELD, MI 48075-1238

EXAMINER

ART UNIT	PAPER NUMBER
3782	

MAIL DATE	DELIVERY MODE
03/22/2011	PAPER

Please find below and/or attached an Office communication concerning this application or proceeding.

The time period for reply, if any, is set in the attached communication.

UNITED STATES PATENT AND TRADEMARK OFFICE

Commissioner for Patents
United States Patent and Trademark Office
P.O. Box 1450
Alexandria, VA 22313-1450
www.uspto.gov

BROOKS KUSHMAN P.C./FGTL
1000 TOWN CENTER
22ND FLOOR
SOUTHFIELD MI 48075-1238

In re Application of	:	
LUCAS, MARC JONATHON	:	DECISION ON PETITION
Application No. 12/913,421	:	TO MAKE SPECIAL UNDER
Filed: Oct. 27, 2010	:	THE GREEN TECHNOLOGY
Attorney Docket No. 83149335	:	PILOT PROGRAM

This is a decision on the petitions under 37 CFR 1.102, filed March 9, 2011 and March 11, 2011, to make the above-identified application special under the pilot program for applications pertaining to Green Technologies as set forth in 74 Federal Register Notice 64666 (December 8, 2009) and amended by 75 Federal Register Notice 28554 (May 21, 2010) and 75 Federal Register Notice 69049 (November 10, 2010).

The petition is **dismissed**.

If reconsideration of this decision is desired, a petition for reconsideration must be filed within ONE (1) MONTH OR THIRTY (30) DAYS from the mail date of this decision, whichever is longer. No extension of this time limit can be granted under 37 CFR 1.136(a) or (b). The petition for reconsideration should include an exhaustive attempt to provide the lacking item(s) noted below, since, after a decision on the petition for reconsideration, no further reconsideration or review of the matter will be undertaken by the Director.

A grantable petition to make an application special under 37 CFR 1.102 and the pilot program as set forth in 74 FR 64666 must be directed to a nonprovisional application filed under 35 USC 111(a) or be a national stage entry under 35 USC 371, exclusive of any reissue applications.

In order to qualify for special status, the following requirements must be met. 1) The application must have no more than 3 independent claims and no more than 20 total claims. 2) The application must not contain any multiple dependent claims. 3) The petition must state the basis for seeking special status, i.e., the claimed invention either: A) materially enhances the quality of the environment or B) materially contributes to: i) the discovery or development of renewable energy resources, ii) the more efficient utilization and conservation of energy resources, or iii) greenhouse gas emission reduction. 4) If the disclosure is not clear on its face that the claimed

invention materially contributes under category (A) or (B), the petition must be accompanied by a statement by the applicant, assignee, or an attorney/agent registered to practice before the Office explaining how the materiality standard is met. 5) A statement that applicant will agree to make an election without traverse in a telephonic interview if a restriction requirement is made by the examiner. 6) The petition to make special must be filed electronically. 7) The petition must be filed at least one day prior to the date that a first Office Action appears in the Patent Application Information Retrieval (PAIR) system. 8) The petition must be accompanied by a request for early publication in compliance with 37 CFR 1.219 and include the publication fee as set forth in 37 CFR 1.18(d).

The requirement for a fee for consideration of the petition to make special for applications pertaining to Green Technologies has been waived. The petition lacks item # 4.

In regard to item 4, petitioner should note that the instant petition includes a statement identifying the basis for the special status (i.e., whether the instant invention (1) materially enhances the quality of the environment or materially contributes to (2) development of renewable energy resources or energy conservation, or (3) greenhouse gas reduction) as required by sections II and III of the notice. However, as stated in the notice, applicant must also provide a statement pertaining to the materiality standard if the application disclosure is not clear on its face as to the materiality of the basis for the special status of the invention. This petition lacks such a statement and it is not agreed that the application on its face meets that materiality standard. For example, it is not clear how the claimed cord storage and a mounting bracket will provide and enhance the quality of the environment or contribute to energy conservation or greenhouse gas reduction

Any reconsideration of this decision should be submitted through the USPTO electronic filing system, EFS-Web, and selecting the document description of "Petition for Green Tech Pilot" on the EFS-Web screen.

Telephone inquiries concerning this decision should be directed to Henry C. Yuen at 571-272-4856.

The application is currently undergoing pre-examination processing. The application will be forwarded to the Technology Center Art Unit 3782 for action in its regular turn.

/Henry C. Yuen/

Henry C. Yuen
Quality Assurance Specialist
Technology Center 3700

UNITED STATES PATENT AND TRADEMARK OFFICE

UNITED STATES DEPARTMENT OF COMMERCE
United States Patent and Trademark Office
Address: COMMISSIONER FOR PATENTS
P.O. Box 1450
Alexandria, Virginia 22313-1450
www.uspto.gov

APPLICATION NO.	FILING DATE	FIRST NAMED INVENTOR	ATTORNEY DOCKET NO.	CONFIRMATION NO.
12/913,428	10/27/2010	Hiroki USUI	Q119932	3854

EXAMINER

7590 12/09/2011
SUGHRUE MION, PLLC
2100 PENNSYLVANIA AVENUE, N.W.
SUITE 800
WASHINGTON, DC 20037

ART UNIT	PAPER NUMBER
1725	

NOTIFICATION DATE	DELIVERY MODE
12/09/2011	ELECTRONIC

DECISION GRANTING PETITION UNDER 37 CFR 1.138(d)

The declaration of express abandonment is recognized

This is in response to the petition under 37 CFR 1.138(d), requesting for a refund of any previously paid search fee and excess claims fee in the above-identified application.

The petition is granted.

The express abandonment is recognized. Any previously paid search fee and excess claims fee are hereby refunded.

Telephone inquiries should be directed to the Office of Data Management at (571) 272-4200.

Patent Publication Branch
Office of Data Management

FORM PET651G (Rev. 08/07)

Doc Code: PET.GREEN
Document Description: Petition for Green Tech Pilot

PTO/SB/420 (03-11)

PETITION TO MAKE SPECIAL UNDER THE GREEN TECHNOLOGY PILOT PROGRAM

Attorney Docket Number: 244826-2	Application Number (if known): 12/913,454	Filing date: 10-27-2010

First Named Inventor: Scott Daniel Feldman-Peabody

Title: MIXED SPUTTERING TARGET OF CADMIUM SULFIDE AND CADMIUM TELLURIDE AND METHODS OF THEIR USE

APPLICANT HEREBY REQUESTS TO PARTICIPATE IN THE GREEN TECHNOLOGY PILOT PROGRAM FOR THE ABOVE-IDENTIFIED APPLICATION. See Instruction Sheet on page 2.

This petition must be timely filed electronically using the USPTO electronic filing system, EFS-Web.

1. By filing this petition:

   Applicant is requesting early publication: Applicant hereby requests early publication under 37 CFR 1.219 and the publication fee set forth in 37 CFR 1.18(d) accompanies this request.

2. By filing this petition: applicant is agreeing to make an election without traverse in a telephonic interview and elect an invention that meets the eligibility requirements for the Green Technology Pilot Program, if the Office determines that the claims are not obviously directed to a single invention. See Instruction Sheet.

3. This request is accompanied by statements of special status for the eligibility requirement.

4. The application contains no more than three (3) independent claims and twenty (20) total claims.

5. The application does not contain any multiple dependent claims.

6. Other attachments: Statement Concerning the Basis for the Special Status

Signature /Allison W. Mages/	Date 11/16/11
Name (Print/Typed) Allison W. Mages	Registration Number 57,275

Note: Signatures of all the inventors or assignees of record of the entire interest or their representative(s) are required in accordance with 37 CFR 1.33 and 11.18. Please see 37 CFR 1.4(d) for the form of the signature. If necessary, submit multiple forms for more than one signature, see below.*

☐ *Total of _____ forms are submitted.

If you need assistance in completing the form, call 1-800-PTO-9199 and select option 2.

IN THE UNITED STATES PATENT AND TRADEMARK OFFICE

First Named Inventor: Scott Daniel Feldman-Peabody	)
Confirmation No.: 3914	)
	)
Serial No.: 12/913,454	)
	)
Filing Date: 10-27-2010	)
	)
Atty Docket No.: 244826-2	)

VIA EFS
Commissioner for Patents
P.O. Box 1450
Alexandria, VA 22313-1450

Statement Concerning the Basis for the Special Status

SIR:

The subject matter disclosed herein relates generally to mixed sputtering targets of cadmium sulfide and cadmium telluride, along with their methods of their use. More particularly, the subject matter disclosed herein relates to the formation of an intermixed thin film layer including both cadmium sulfide and cadmium telluride for use in cadmium telluride thin film photovoltaic devices. (See [0001]).

Thin film photovoltaic (PV) modules (also referred to as "solar panels") based on cadmium telluride (CdTe) paired with cadmium sulfide (CdS) as the photo-reactive components are gaining wide acceptance and interest in the industry. CdTe is a semiconductor material having characteristics particularly suited for conversion of solar energy to electricity. For example, CdTe has an energy bandgap of about 1.45 eV, which enables it to convert more energy from the solar spectrum as compared to lower bandgap semiconductor materials

historically used in solar cell applications (e.g., about 1.1 eV for silicon). Also, CdTe converts radiation energy in lower or diffuse light conditions as compared to the lower bandgap materials and, thus, has a longer effective conversion time over the course of a day or in cloudy conditions as compared to other conventional materials. (See [0002]).

The junction of the n-type layer and the p-type layer is generally responsible for the generation of electric potential and electric current when the CdTe PV module is exposed to light energy, such as sunlight. Specifically, the cadmium telluride (CdTe) layer and the cadmium sulfide (CdS) form a p-n heterojunction, where the CdTe layer acts as a p-type layer (i.e., a positive, electron accepting layer) and the CdS layer acts as a n-type layer (i.e., a negative, electron donating layer). Free carrier pairs are created by light energy and then separated by the p-n heterojunction to produce an electrical current. (See [0003]).

Intermixing at the surfaces of the cadmium sulfide and cadmium telluride layers can occur during the annealing process after deposition of the cadmium telluride layer. This intermixing can increase the minority carrier lifetime in the cadmium telluride, thereby increasing the open circuit voltage (Voc) and the fill factor, and therefore the efficiency of the device. However, intermixing caused by the annealing process is dependent upon several manufacturing variables including the annealing temperature, length of anneal, thin film and surface uniformity (especially at the p-n junction), dopant concentration(s), annealing atmosphere (e.g., humidity), etc. These manufacturing variables can create

problems in forming substantially uniform PV devices during a large scale manufacturing process, resulting in varying efficiencies of the manufactured PV devices. (See [0004]).

Thus, a need exists for cadmium telluride photovoltaic devices having improved p-n junctions defined by controlled intermixed layers of cadmium sulfide and cadmium telluride. (See [0005]).

Mixed targets are generally disclosed for sputtering an intermixed layer of cadmium sulfide and cadmium telluride. The mixed target can include cadmium sulfide and cadmium telluride. Methods of forming the mixed target are also provided. For example, a powdered blend can be formed from powdered cadmium sulfide and powdered cadmium telluride, and pressed into a mixed target. (See [0007]).

Methods are also generally disclosed for manufacturing a cadmium telluride based thin film photovoltaic device having an intermixed layer. For example, a mixed target of cadmium sulfide and cadmium telluride can be sputtered directly on a cadmium sulfide layer to form an intermixed layer, and a cadmium telluride layer can be formed on the intermixed layer. (See [0008]).

Accordingly, Applicant respectfully submits that Special Status is sought on the basis that the present invention materially contributes to the discovery or development of renewable energy resources for at least the reason that the claimed embodiments reduce unwanted variances occurring during large-scale manufacturing of thin film CdTe PV modules (solar panels) used in solar energy systems, thereby enhancing the reliability and uniformity of said systems, which

are generally recognized as the most cost efficient of the commercially available solar systems in terms of cost per watt of power generated.

The undersigned representative may be contacted at the number below to facilitate the resolution of any matters. Please charge any fees that are incurred in connection with this Statement to deposit account no. 09-0470.

Respectfully submitted,

General Electric Company

By : /Allison W. Mages/
Allison W. Mages
Reg. No. 57,275

Dated: November 16, 2011

GE Global Patent Operation
2 Corporate Drive, Suite 648
Shelton, CT 06484
203-944-6730

UNITED STATES PATENT AND TRADEMARK OFFICE

UNITED STATES DEPARTMENT OF COMMERCE
United States Patent and Trademark Office
Address: COMMISSIONER FOR PATENTS
P.O. Box 1450
Alexandria, Virginia 22313-1450
www.uspto.gov

APPLICATION NO.	FILING DATE	FIRST NAMED INVENTOR	ATTORNEY DOCKET NO.	CONFIRMATION NO.
12/913,454	10/27/2010	Scott Daniel Feldman-Peabody	244826-2/PRSS-51B	3914

93081 7590 12/16/2011
Dority & Manning, P.A. and Primestar Solar Inc.
Post Office Box 1449
Greenville, SC 29602

EXAMINER

ART UNIT	PAPER NUMBER
1724	

MAIL DATE	DELIVERY MODE
12/16/2011	PAPER

Please find below and/or attached an Office communication concerning this application or proceeding.

The time period for reply, if any, is set in the attached communication.

UNITED STATES PATENT AND TRADEMARK OFFICE

Commissioner for Patents
United States Patent and Trademark Office
P.O. Box 1450
Alexandria, VA 22313-1450
www.uspto.gov

12/16/11

Dority & Manning, P.A. and Primestar Solar Inc.
Post Office Box 1449
Greenville SC 29602

In re Application of	:	
Feldman-Peabody	:	DECISION ON PETITION
Application No. 12/913,454	:	TO MAKE SPECIAL UNDER
Filed: 10/27/2010	:	THE GREEN TECHNOLOGY
Attorney Docket No. **244826-2/PRSS-51B**	:	PILOT PROGRAM

This is a decision on the petition under 37 CFR 1.102, filed 10/17/2011, to make the above-identified application special under the pilot program for applications pertaining to Green Technologies as set forth in 74 Federal Register Notice 64666 (December 8, 2009) and amended by 75 Federal Register Notice 28554 (May 21, 2010) and 75 Federal Register Notice 69049 (November 10, 2010).

The petition is **GRANTED**.

A grantable petition to make an application special under 37 CFR 1.102 and the pilot program as set forth in 74 FR 64666 must be directed to a nonprovisional application filed under 35 USC 111(a) or be a national stage entry under 35 USC 371, exclusive of any reissue applications.

In order to qualify for special status, the following requirements must be met. 1) The application must have no more than 3 independent claims and no more than 20 total claims. 2) The application must not contain any multiple dependent claims. 3) The petition must state the basis for seeking special status, i.e., the claimed invention either: A) materially enhances the quality of the environment or B) materially contributes to: i) the discovery or development of renewable energy resources, ii) the more efficient utilization and conservation of energy resources, or iii) greenhouse gas emission reduction. 4) If the disclosure is not clear on its face that the claimed invention materially contributes under category (A) or (B), the petition must be accompanied by a statement by the applicant, assignee, or an attorney/agent registered to practice before the Office explaining how the materiality standard is met. 5) A statement that applicant will agree to make an election without traverse in a telephonic interview if a restriction requirement is made by the examiner. 6) The petition to make special must be filed electronically. 7) The petition must be filed at least one day prior to the date that a first Office Action appears in the Patent Application Information Retrieval (PAIR) system. 8) The petition must be accompanied by a request for early publication in compliance with 37 CFR 1.219 and include the publication fee as set forth in 37 CFR 1.18(d).

The requirement for a fee for consideration of the petition to make special for applications pertaining to Green Technologies has been waived.

The instant petition complies with items 1 – 8 above. Accordingly, the above-identified application has been accorded "special" status.

Telephone inquires concerning this decision should be directed to Tom Dunn at 571-272-1171.

The application is being forwarded to the Technology Center Art Unit 1724 for action on the merits commensurate with this decision.

/Tom Dunn/

Tom Dunn
Quality Assurance Specialist
Technology Center 1700

UNITED STATES PATENT AND TRADEMARK OFFICE

Commissioner for Patents
United States Patent and Trademark Office
P.O. Box 1450
Alexandria, VA 22313-1450
www.uspto.gov

HEAD, JOHNSON & KACHIGIAN
228 W 17TH PLACE
TULSA OK 74119

MAILED

OCT 04 2011

OFFICE OF PETITIONS

In re Application of :
Kadrmas, et al. :
Application No. 12/913,519 : DECISION ON PETITION
Filed: October 27, 2010 :
Attorney Docket No. ROA524-00/08398B :

This is a decision on the petition, filed, September 23, 2011, which is being treated as a request under 37 CFR 3.81(b)[1] to correct the assignee's name and residence on the Fee(s) Transmittal form PTOL-85(b) by way of a certificate of correction in the patent to be issued from the above-identified application.

The petition under 37 CFR 3.81(b) is **GRANTED**.

Petitioners state that the correct assignee name is "Arr-Maz Products, L.P." and that the incorrect assignee name was included on the Fee(s) Transmittal form PTOL-85(b) at the time of payment of the issue fee. Accordingly, petitioners request that a certificate of correction be issued to reflect the correct assignee on the front page of the Letters Patent in the patent to be issued from the application.

37 CFR 3.81(b), effective June 25, 2004, reads:

> *After payment of the issue fee:* Any request for issuance of an application in the name of the assignee submitted after the date of payment of the issue fee, and any request for a patent to be corrected to state the name of the assignee, must state that the assignment was submitted for recordation as set forth in § 3.11 before issuance of the patent, and must include a request for a certificate of correction under § 1.323 of this chapter (accompanied by the fee set forth in § 1.20(a) and the processing fee set forth in § 1.17(i) of this chapter.

[1] *See* MPEP 1309, subsection II; and Official Gazette of June 22, 2004.

The requisite fees for the present petition were either paid on September 23, 2011.

A review of the above PTOL-85(B) reveals that the name of the assignee was erroneously identified in Item 3 thereof. Further, Office assignment records reflect that:

--Arr-Maz Products, L.P. --

is the correct assignee of record. Accordingly, as the request complies with the provisions of 37 CFR 3.81(b), it would be appropriate for a certificate of correction to be processed after issuance of this application into a patent.

Petitioners are requested to file a corrected patent assignment coversheet accompanied by another copy of the assignment because an incorrect assignee is listed on the patent assignment coversheet. The actual recorded assignment lists the correct assignee. However, the patent assignment coversheet lists the assignee as "Arr-Mar Products, L.P."

Inquiries related to this communication should be directed to the undersigned at (571) 272-3230.

Any questions concerning the issuance of a Certificate of Correction should be directed to the Certificates of Correction Branch at (571) 272-4200.

This matter is being referred to the Certificates of Correction Branch for processing of a certificate of correction after issuance of this application into a patent.

Shirene Willis Brantley
Senior Petitions Attorney
Office of Petitions

UNITED STATES PATENT AND TRADEMARK OFFICE

Commissioner for Patents
United States Patent and Trademark Office
P.O. Box 1450
Alexandria, VA 22313-1450
www.uspto.gov

Marshall Gerstein & Borun LLP
233 South Wacker Drive
6300 Willis Tower
Chicago, IL 60606-6357

MAILED
APR 18 2011
OFFICE OF PETITIONS

In re Application of	:	
Stephen R. Schmidt	:	
Application No. 12/913,521	:	DECISION ON PETITION
Filed: October 27, 2010	:	TO WITHDRAW
Attorney Docket No. 28748/37575B	:	FROM RECORD
	:	

This is a decision on the Request to Withdraw as attorney or agent of record under 37 C.F.R. § 1.36(b), filed March 10, 2011.

The request is **APPROVED**.

A grantable request to withdraw as attorney/agent of record must be signed by every attorney/agent seeking to withdraw or contain a clear indication that one attorney is signing on behalf of another/others. A request to withdraw will not be approved unless at least 30 (thirty) days would remain between the date of approval and the later of the expiration date of a time to file a response or the expiration date of the maximum time period which can be extended under 37 C.F.R. § 1.136(a).

The request was signed by Jeffrey S. Sharp on behalf of all attorneys of record. All attorneys/agents have been withdrawn. Applicant is reminded that there is no attorney of record at this time.

All future correspondence will be directed to the first named inventor Stephen R. Schmidt at the address indicated below.

There is in outstanding Office action mailed March 21, 2011 that requires a reply from the applicant.

Telephone inquiries concerning this decision should be directed to Terri Johnson at 571-272-2991.

/Terri Johnson/
Terri Johnson
Petitions Examiner
Office of Petitions

cc: **Stephen Schmidt**
5744 W. 77th Street
Burbank IL 60459

UNITED STATES PATENT AND TRADEMARK OFFICE

UNITED STATES DEPARTMENT OF COMMERCE
United States Patent and Trademark Office
Address: COMMISSIONER FOR PATENTS
P.O. Box 1450
Alexandria, Virginia 22313-1450
www.uspto.gov

APPLICATION NUMBER	FILING OR 371(C) DATE	FIRST NAMED APPLICANT	ATTY. DOCKET NO./TITLE
12/913,521	10/27/2010	Stephen R. Schmidt	28748/37575B

CONFIRMATION NO. 4033

POWER OF ATTORNEY NOTICE

4743
MARSHALL, GERSTEIN & BORUN LLP
233 SOUTH WACKER DRIVE
6300 WILLIS TOWER
CHICAGO, IL 60606-6357

OC000000047191622

Date Mailed: 04/15/2011

NOTICE REGARDING CHANGE OF POWER OF ATTORNEY

This is in response to the Power of Attorney filed 03/10/2011.

- The withdrawal as attorney in this application has been accepted. Future correspondence will be mailed to the new address of record. 37 CFR 1.33.

/tsjohnson/

Office of Data Management, Application Assistance Unit (571) 272-4000, or (571) 272-4200, or 1-888-786-0101

UNITED STATES PATENT AND TRADEMARK OFFICE

UNITED STATES DEPARTMENT OF COMMERCE
United States Patent and Trademark Office
Address: COMMISSIONER FOR PATENTS
P.O. Box 1450
Alexandria, Virginia 22313-1450
www.uspto.gov

APPLICATION NO.	FILING DATE	FIRST NAMED INVENTOR	ATTORNEY DOCKET NO.	CONFIRMATION NO.
12/913,535	10/27/2010	Hiroki USUI	Q119931	4066

7590 12/09/2011
SUGHRUE MION, PLLC
2100 PENNSYLVANIA AVENUE, N.W.
SUITE 800
WASHINGTON, DC 20037

EXAMINER

ART UNIT	PAPER NUMBER
1725	

NOTIFICATION DATE	DELIVERY MODE
12/09/2011	ELECTRONIC

DECISION GRANTING PETITION UNDER 37 CFR 1.138(d)

The declaration of express abandonment is recognized

This is in response to the petition under 37 CFR 1.138(d), requesting for a refund of any previously paid search fee and excess claims fee in the above-identified application.

The petition is granted.

The express abandonment is recognized. Any previously paid search fee and excess claims fee are hereby refunded.

Telephone inquiries should be directed to the Office of Data Management at (571) 272-4200.

Patent Publication Branch
Office of Data Management

Doc Code: PET.GREEN
Document Description: Petition for Green Tech Pilot

PTO/SB/420 (05-10)
Approved for use through 01/31/2011. OMB 0651-0062
U.S. Patent and Trademark Office; U. S. DEPARTMENT OF COMMERCE
Under the Paperwork Reduction Act of 1995, no persons are required to respond to a collection of information unless it displays a valid OMB control number.

PETITION TO MAKE SPECIAL UNDER THE GREEN TECHNOLOGY PILOT PROGRAM

Attorney Docket Number: 41067US	Application Number (if known): 12/913,542	Filing date: October 27, 2010

First Named Inventor: Erin Elizabeth Tullos

Title: MERCURY REMOVAL WITH SORBENTS MAGNETICALLY SEPARABLE FROM TREATED FLUIDS

APPLICANT HEREBY REQUESTS TO PARTICIPATE IN THE GREEN TECHNOLOGY PILOT PROGRAM FOR THE ABOVE-IDENTIFIED APPLICATION. See Instruction Sheet on page 2.

This petition must be timely filed electronically using the USPTO electronic filing system, EFS-Web.

1. By filing this petition:

   Applicant is requesting early publication: Applicant hereby requests early publication under 37 CFR 1.219 and the publication fee set forth in 37 CFR 1.18(d) accompanies this request.

2. By filing this petition: applicant is agreeing to make an election without traverse in a telephonic interview and elect an invention that meets the eligibility requirements set forth in the notice titled "Pilot Program for Green Technologies Including Greenhouse Gas Reduction," as modified by the notice titled "Elimination of Classification Requirement in the Green Technology Pilot Program," each of which was published in the Federal Register, if the Office determines that the claims are not obviously directed to a single invention.

3. This request is accompanied by statements of special status for the eligibility requirement.

4. The application contains no more than three (3) independent claims and twenty (20) total claims.

5. The application does not contain any multiple dependent claims.

6. Other attachments: _____

Signature /Chance E. Hardie/	Date November 11, 2010
Name (Print/Typed) Chance E. Hardie	Registration Number 55,247

Note: *Signatures of all the inventors or assignees of record of the entire interest or their representative(s) are required in accordance with 37 CFR 1.33 and 11.18. Please see 37 CFR 1.4(d) for the form of the signature. If necessary, submit multiple forms for more than one signature, see below*.*

☑ *Total of 1 forms are submitted.

The information is required to obtain or retain a benefit by the public which is to file (and by the USPTO to process) an application. Confidentiality is governed by 35 U.S.C. 122 and 37 CFR 1.11 and 1.14. This collection is estimated to take 1 hour to complete, including gathering, preparing, and submitting the completed application form to the USPTO. Time will vary depending upon the individual case. Any comments on the amount of time you require to complete this form and/or suggestions for reducing this burden, should be sent to the Chief Information Officer, U.S. Patent and Trademark Office, U.S. Department of Commerce, P.O. Box 1450, Alexandria, VA 22313-1450. DO NOT SEND FEES OR COMPLETED FORMS TO THIS ADDRESS. SEND TO: **Commissioner for Patents, P.O. Box 1450, Alexandria, VA 22313-1450.**

If you need assistance in completing the form, call 1-800-PTO-9199 and select option 2.

Appl. No.:	12/913,542	Confirmation No.: 4079
Applicant:	Erin Elizabeth Tullos	
Filed:	October 27, 2010	
TC/A.U.:	unknown	
Examiner:	unknown	
Docket No.:	41067US	
Customer No.:	28841	
Title:	MERCURY REMOVAL WITH SORBENTS MAGNETICALLY SEPARABLE FROM TREATED FLUIDS	

Commissioner for Patents
P.O. Box 1450
Alexandria VA 22313-1450

STATEMENTS OF SPECIAL STATUS

Sir:

In furtherance to the accompanying Petition to Make Special Under the Green Technology Pilot Program, Applicants submit the following in support thereof. The claimed invention in the above-identified application materially enhances the quality of the environment by contributing to the restoration or maintenance of the basic life-sustaining element air. In particular, the invention relates to methods of removing mercury from liquid hydrocarbons, which would contaminate the air if combusted during use without such removal of the mercury.

Respectfully Submitted,

Date: November 11, 2010

By: /Chance E. Hardie/
Attorney
Registration No. 55,247

CONOCOPHILLIPS COMPANY – I.P. LEGAL
ATTN: Docketing
600 N. Dairy Ashford, MA-1135
Houston, Texas 77079
(281) 293-4126
(281) 293-2127 (Fax)

UNITED STATES PATENT AND TRADEMARK OFFICE

UNITED STATES DEPARTMENT OF COMMERCE
United States Patent and Trademark Office
Address: COMMISSIONER FOR PATENTS
P.O. Box 1450
Alexandria, Virginia 22313-1450
www.uspto.gov

APPLICATION NO.	FILING DATE	FIRST NAMED INVENTOR	ATTORNEY DOCKET NO.	CONFIRMATION NO.
12/913,542	10/27/2010	Erin Elizabeth Tullos	41067US	4079

28841 7590 01/12/2011
ConocoPhillips Company - IP Services Group
Attention: DOCKETING
600 N. Dairy Ashford
Bldg. MA-1135
Houston, TX 77079

EXAMINER
BARRY, CHESTER T

ART UNIT	PAPER NUMBER
1776	

NOTIFICATION DATE	DELIVERY MODE
01/12/2011	ELECTRONIC

Please find below and/or attached an Office communication concerning this application or proceeding.

The time period for reply, if any, is set in the attached communication.

Notice of the Office communication was sent electronically on above-indicated "Notification Date" to the following e-mail address(es):

Legal-IP@conocophillips.com

UNITED STATES PATENT AND TRADEMARK OFFICE

Commissioner for Patents
United States Patent and Trademark Office
P.O. Box 1450
Alexandria, VA 22313-1450
www.uspto.gov

ConocoPhillips Company - IP Services Group
Attention: DOCKETING
600 N. Dairy Ashford
Bldg. MA-1135
Houston TX 77079

JAN 12 2011

In re Application of	:	
Tullos et al.	:	DECISION ON PETITION
Application No. 12/913,542	:	TO MAKE SPECIAL UNDER
Filed: 10/27/2010	:	THE GREEN TECHNOLOGY
Attorney Docket No. **41067US**	:	PILOT PROGRAM

This is a decision on the petition under 37 CFR 1.102, filed 11/12/2010, to make the above-identified application special under the pilot program for applications pertaining to Green Technologies as set forth in 74 Federal Register Notice 64666 (December 8, 2009) and amended by 75 Federal Register Notice 28554 (May 21, 2010) and 75 Federal Register Notice 69049 (November 10, 2010).

The petition is **GRANTED**.

A grantable petition to make an application special under 37 CFR 1.102 and the pilot program as set forth in 74 FR 64666 must be directed to a nonprovisional application filed under 35 USC 111(a) or be a national stage entry under 35 USC 371, exclusive of any reissue applications.

In order to qualify for special status, the following requirements must be met. 1) The application must have no more than 3 independent claims and no more than 20 total claims. 2) The application must not contain any multiple dependent claims. 3) The petition must state the basis for seeking special status, i.e., the claimed invention either: A) materially enhances the quality of the environment or B) materially contributes to: i) the discovery or development of renewable energy resources, ii) the more efficient utilization and conservation of energy resources, or iii) greenhouse gas emission reduction. 4) If the disclosure is not clear on its face that the claimed invention materially contributes under category (A) or (B), the petition must be accompanied by a statement by the applicant, assignee, or an attorney/agent registered to practice before the Office explaining how the materiality standard is met. 5) A statement that applicant will agree to make an election without traverse in a telephonic interview if a restriction requirement is made by the examiner. 6) The petition to make special must be filed electronically. 7) The petition must be filed at least one day prior to the date that a first Office Action appears in the Patent Application Information Retrieval (PAIR) system. 8) The petition must be accompanied by a

request for early publication in compliance wit,h 37 CFR 1.219 and include the publication fee as set forth in 37 CFR 1.18(d).

The requirement for a fee for consideration of the petition to make special for applications pertaining to Green Technologies has been waived.

The instant petition complies with items 1 – 8 above. Accordingly, the above-identified application has been accorded "special" status.

Telephone inquires concerning this decision should be directed to Tom Dunn at 571-272-1171.

The application is being forwarded to the Technology Center Art Unit 1772 for action on the merits commensurate with this decision.

/Tom Dunn/

Tom Dunn
Quality Assurance Specialist
Technology Center 1700

UNITED STATES PATENT AND TRADEMARK OFFICE

Commissioner for Patents
United States Patent and Trademark Office
P.O. Box 1450
Alexandria, VA 22313-1450
www.uspto.gov

JAMES EDWARD LEDBETTER
1875 EYE STREET
SUITE 1200
WASHINGTON, DC 20006

MAILED
DEC 19 2011
OFFICE OF PETITIONS

In re Application of	:	
Yutaka Murakami, et al.	:	
Application No. 12/913,601	:	DECISION GRANTING PETITION
Filed: October 27, 2010	:	UNDER 37 CFR 1.313(c)(2)
Attorney Docket No. 009289-51973	:	

This is a decision on the petition under 37 CFR 1.313(c)(2), filed December 16, 2011, to withdraw the above-identified application from issue after payment of the issue fee.

The petition is **GRANTED**.

The above-identified application is withdrawn from issue for consideration of a submission under 37 CFR 1.114 (request for continued examination). *See* 37 CFR 1.313(c)(2).

Petitioner is advised that the issue fee paid on November 10, 2011 cannot be refunded. If, however, this application is again allowed, petitioner may request that it be applied towards the issue fee required by the new Notice of Allowance.[1]

Telephone inquiries regarding this decision should be directed to undersigned at (571) 272-1642. All other inquiries concerning the examination or status of this application should be directed to the Technology Center.

This application is being referred to Technology Center AU 2611 for processing of the request for continued examination under 37 CFR 1.114 and for consideration of the concurrently filed information disclosure statement.

/AMW/
April M. Wise
Petitions Examiner
Office of Petitions

[1] *The request to apply the issue fee to the new Notice may be satisfied by completing and returning the new Part B – Fee(s) Transmittal Form (along with any balance due at the time of submission). Petitioner is advised that the Issue Fee Transmittal Form must be completed and timely submitted to avoid abandonment of the application.*

Doc Code: PET.GREEN
Document Description: Petition for Green Tech Pilot

PTO/SB/420 (11-10)
Approved for use through 01/31/2011. OMB 0651-0062
U.S. Patent and Trademark Office; U. S. DEPARTMENT OF COMMERCE
Under the Paperwork Reduction Act of 1995, no persons are required to respond to a collection of information unless it displays a valid OMB control number.

PETITION TO MAKE SPECIAL UNDER THE GREEN TECHNOLOGY PILOT PROGRAM

Attorney Docket Number: 83166384	Application Number (if known): 12/913,661	Filing date: October 27, 2010
First Named Inventor: Matthew Bucciero		
Title: WIRELESS FUEL LEVEL SENSOR FOR A VEHICLE FUEL TANK		

APPLICANT HEREBY REQUESTS TO PARTICIPATE IN THE GREEN TECHNOLOGY PILOT PROGRAM FOR THE ABOVE-IDENTIFIED APPLICATION. See Instruction Sheet on page 2.

This petition must be timely filed electronically using the USPTO electronic filing system, EFS-Web.

1. By filing this petition:

   Applicant is requesting early publication: Applicant hereby requests early publication under 37 CFR 1.219 and the publication fee set forth in 37 CFR 1.18(d) accompanies this request.

2. By filing this petition: applicant is agreeing to make an election without traverse in a telephonic interview and elect an invention that meets the eligibility requirements for the Green Technology Pilot Program, if the Office determines that the claims are not obviously directed to a single invention. See Instruction Sheet.

3. This request is accompanied by statements of special status for the eligibility requirement.

4. The application contains no more than three (3) independent claims and twenty (20) total claims.

5. The application does not contain any multiple dependent claims.

6. Other attachments: _____

Signature /John D. Russell/	Date April 11, 2011
Name (Print/Typed) John D. Russell	Registration Number 47,048

Note: *Signatures of all the inventors or assignees of record of the entire interest or their representative(s) are required in accordance with 37 CFR 1.33 and 11.18. Please see 37 CFR 1.4(d) for the form of the signature. If necessary, submit multiple forms for more than one signature see below*.*

☒ *Total of 1 forms are submitted.

The information is required to obtain or retain a benefit by the public which is to file (and by the USPTO to process) an application. Confidentiality is governed by 35 U.S.C. 122 and 37 CFR 1.11 and 1.14. This collection is estimated to take 12 hours to complete, including gathering, preparing, and submitting the completed application form to the USPTO. Time will vary depending upon the individual case. Any comments on the amount of time you require to complete this form and/or suggestions for reducing this burden, should be sent to the Chief Information Officer, U.S. Patent and Trademark Office, U.S. Department of Commerce, P.O. Box 1450, Alexandria, VA 22313-1450. DO NOT SEND FEES OR COMPLETED FORMS TO THIS ADDRESS. SEND TO: **Commissioner for Patents, P.O. Box 1450, Alexandria, VA 22313-1450.**

If you need assistance in completing the form, call 1-800-PTO-9199 and select option 2.

IN THE UNITED STATES PATENT AND TRADEMARK OFFICE

Applicant	:	Matthew Bucciero
Application No.	:	12/913,661
Filed	:	October 27, 2010
Title	:	WIRELESS FUEL LEVEL SENSOR FOR A VEHICLE FUEL TANK
Group Art Unit	:	2612
Confirmation No.	:	4307
Docket No.	:	83166384

Commissioner for Patents
P.O. Box 1450
Alexandria, VA 22313-1450

CERTIFICATE OF TRANSMISSION

I hereby certify that this correspondence is being transmitted via the U.S. Patent and Trademark Office electronic filing system (EFS-Web) to the USPTO on:

April 11, 2011	/Angie C. Farr/
Date	Angie C. Farr

STATEMENTS OF SPECIAL STATUS

Applicants respectfully request consideration of the following statement concerning the basis for the special status as well as the following statement pertaining to the materiality standard.

I. Statement concerning the basis for special status.

Applicants submit that special status is sought on the following bases: (1) the claimed invention materially enhances the quality of the environment.

II. Statement pertaining to the materiality standard.

As a preliminary matter, Applicants note that the following statement refers explicitly to the elements of independent claim 1, which is the broadest claim in many respects.

Regarding basis (1), Applicants submit that the claimed invention materially enhances the quality of the environment by reducing motor vehicle evaporative emissions. Specifically, the claimed invention provides a mechanism to monitor fuel tank levels without creating holes in the fuel tank. As explained in the Background and

Summary of the subject application, fuel level sensors, such as float type fuel level sensors, may be used in conjunction with a controller and display gauge to provide a current vehicle fuel level to a driver. Float sensors typically include a float coupled to a potentiometer having a variable resistor that senses fuel level as the float travels up and down in the fuel tank. A controller may receive a signal from the float sensor via a wired connection and the controller may provide an output to a fuel gauge based on the float sensor signal. However, when a float sensor and other fuel tank components are installed in a fuel tank, the manufacturer may have to put multiple holes in the fuel tank housing. The holes may create permeation pathways from which fuel (e.g., vapor, liquid) can escape, thereby increasing evaporative emission from the vehicle. The claimed invention addresses this issue by providing a wireless fuel level sensor. For example, claim 1 recites:

> A vehicle fuel tank, comprising:
>
> a housing defining an interior region;
>
> a fuel level sensor coupled to the interior region, the fuel level sensor responsive to a fuel pressure; and
>
> a radio frequency identification (RFID) device electronically coupled to the fuel level sensor configured to wirelessly transmit a signal indicative of a fuel level in the fuel tank.

A fuel level sensor within the interior of a fuel tank is coupled to a radio frequency identification device, which is configured to wirelessly transmit a signal indicative of a fuel level in the fuel tank. In this way, a fuel level sensor may be placed remotely in a fuel tank and wirelessly connected to external components. The remotely placed sensor can provide fuel level information for areas of a fuel tank that may otherwise require an additional hole in the fuel tank. Furthermore, the number of permeation pathways within the fuel tank may also be reduced due to the elimination of wires coupling the fuel level sensor to external components when an RFID device is utilized. By reducing the number of permeation pathways within the fuel tank, fuel vapors that may have otherwise escaped to the atmosphere can be contained within the fuel tank and/or evaporative emission control system, thus reducing the amount of evaporative emissions and enhancing the quality of the environment.

Please charge any cost incurred in this filing, along with any other costs, to Deposit Account No. 06-1510.

Respectfully submitted,

ALLEMAN HALL MCCOY RUSSELL & TUTTLE LLP

/John D. Russell/
John D. Russell
Registration No. 47,048
Customer No. 36865
Attorney/Agent for Applicants/Assignee
806 S.W. Broadway, Suite 600
Portland, Oregon 97205
Telephone: (503) 459-4141
Facsimile: (503) 459-4142

UNITED STATES PATENT AND TRADEMARK OFFICE

UNITED STATES DEPARTMENT OF COMMERCE
United States Patent and Trademark Office
Address: COMMISSIONER FOR PATENTS
P.O. Box 1450
Alexandria, Virginia 22313-1450
www.uspto.gov

APPLICATION NO.	FILING DATE	FIRST NAMED INVENTOR	ATTORNEY DOCKET NO.	CONFIRMATION NO.
12/913,661	10/27/2010	Matthew Bucciero	83166384	4307

36865 7590 04/26/2011
ALLEMAN HALL MCCOY RUSSELL & TUTTLE, LLP
806 S.W. BROADWAY, SUITE 600
PORTLAND, OR 97205

EXAMINER
LEE, BENJAMIN C

ART UNIT	PAPER NUMBER
2612	

MAIL DATE	DELIVERY MODE
04/26/2011	PAPER

Please find below and/or attached an Office communication concerning this application or proceeding.

The time period for reply, if any, is set in the attached communication.

UNITED STATES PATENT AND TRADEMARK OFFICE

Commissioner for Patents
United States Patent and Trademark Office
P.O. Box 1450
Alexandria, VA 22313-1450
www.uspto.gov

ALLEMAN HALL MCCOY RUSSELL & TUTTLE, LLP
806 S.W. BROADWAY, SUITE 600
PORTLAND OR 97205

In re Application of	:	
BUCCIERO, MATTHEW	:	DECISION ON PETITION
Application No. 12/913,661	:	TO MAKE SPECIAL UNDER
Filed: October 27, 2010	:	THE GREEN TECHNOLOGY
Attorney Docket No. **83166384**	:	PILOT PROGRAM
Title: WIRELESS FUEL LEVEL SENSOR FOR A VEHICLE FUEL TANK		

This is a decision on the petition under 37 CFR 1.102, filed April 11, 2011, to make the above-identified application special under the pilot program for applications pertaining to Green Technologies as set forth in 74 Federal Register Notice 64666 (December 8, 2009) and amended by 75 Federal Register Notice 28554 (May 21, 2010) and 75 Federal Register Notice 69049 (November 10, 2010).

The petition is **GRANTED**.

A grantable petition to make an application special under 37 CFR 1.102 and the pilot program as set forth in 74 FR 64666 must be directed to a nonprovisional application filed under 35 USC 111(a) or be a national stage entry under 35 USC 371, exclusive of any reissue applications.

In order to qualify for special status, the following requirements must be met. 1) The application must have no more than 3 independent claims and no more than 20 total claims. 2) The application must not contain any multiple dependent claims. 3) The petition must state the basis for seeking special status, i.e., the claimed invention either: A) materially enhances the quality of the environment or B) materially contributes to: i) the discovery or development of renewable energy resources, ii) the more efficient utilization and conservation of energy resources, or iii) greenhouse gas emission reduction. 4) If the disclosure is not clear on its face that the claimed invention materially contributes under category (A) or (B), the petition must be accompanied by a statement by the applicant, assignee, or an attorney/agent registered to practice before the Office explaining how the materiality standard is met. 5) A statement that applicant will agree to make an election without traverse in a telephonic interview if a restriction requirement is made by the examiner. 6) The petition to make special must be filed electronically. 7) The petition must be filed at least one day prior to the date that a first Office Action appears in the Patent Application Information Retrieval (PAIR) system. 8) The petition must be accompanied by a

request for early publication in compliance with 37 CFR 1.219 and include the publication fee as set forth in 37 CFR 1.18(d).

The requirement for a fee for consideration of the petition to make special for applications pertaining to Green Technologies has been waived.

The instant petition complies with items 1 – 8 above. Accordingly, the above-identified application has been accorded "special" status.

Telephone inquires concerning this decision should be directed to Wellington Chin at 571-272-3134.

The application is being forwarded to the Technology Center Art Unit 2629 for action on the merits commensurate with this decision.

/Wellington Chin/

Wellington Chin
Quality Assurance Specialist
Technology Center 2600

UNITED STATES PATENT AND TRADEMARK OFFICE

Commissioner for Patents
United States Patent and Trademark Office
P.O. Box 1450
Alexandria, VA 22313-1450
www.uspto.gov

Mail Date: March 7, 2011

CR MILES, P.C.
CRAIG R. MILES
405 MASON COURT, SUITE 119
FORT COLLINS CO 80524

In re Application of: Thomas et al. Application No.: 12/913675 Filed: October 27, 2010 Title: CUTTING GUIDE WITH SEAM ALLOWANCE RECESS	DECISION ON PETITION TO MAKE SPECIAL FOR NEW APPLICATION UNDER 37 C.F.R. § 1.102 & M.P.E.P. § 708.02

This is a decision on the petition filed on October 27, 2010 to make the above-identified application special for accelerated examination procedure under 37 C.F.R. § 1.102(d).

The petition to make the application special is **DISMISSED**.

REGULATION AND PRACTICE

A grantable petition to make special under 37 C.F.R. § 1.102(d) and pursuant to the "Change to Practice for Petitions in Patent Applications to Make Special and for Accelerated Examination" published in the Federal Register on June 26, 2006 (71 Fed. Reg. 36323), must satisfy the following conditions:

I. Conditions Regarding the Application:

1. the application must be a non-reissue utility or design application filed under 37 CFR 1.111(a);
2. the application, the petition and the required fees must be filed electronically using the USPTO's electronic filing system (EFS), or EFS-web; if not filed electronically, a statement asserting that EFS and EFS-web were not available during the normal business hours.
3. at the time of filing, the application must be complete under 37 CFR 1.51 and in condition for examination;
4. the application must contain three or fewer independent claims and twenty or fewer total claims and the claims must be directed to a single invention.

II. Conditions Regarding the Petition:

The petition must:

1. be filed with the application;
2. include a statement that applicant agrees not to separately argue the patentability of any independent claim during any appeal in the application;

3. include a statement that applicant agrees to make an election without traverse in a telephone interview.

4. include a statement that applicant agrees to conduct such an interview when requested by the examiner.

5. include a statement, made based on a good faith belief, that a preexamination search in compliance with the following requirements, was conducted, including an identification of the field of search by United States class and subclass, where applicable, and for database searches, the search logic or chemical structure or sequence used as a query, the name of the file(s) searched and the database service, and the date of the search.

The preexamination search must:

5.1 involve U.S. patents and patent application publications, foreign patent documents, and non-patent literature, unless the applicant can justify with reasonable certainty that no references more pertinent than those already identified are likely to be found in the eliminated sources and includes such a justification with this statement;

5.2. be directed to the claimed invention and encompass all of the features of the claims, giving the claims the broadest reasonable interpretation;

5.3. encompass the disclosed features that may be claimed.

6. must provide in support of the petition an accelerated examination support document. An accelerated examination support document must include:

6.1. an information disclosure statement (IDS) in compliance with 37 CFR 1.98 citing each reference deemed most closely related to the subject matter of each of the claims;

6.2. an identification of all the limitations in the claims that are disclosed by the reference specifying where the limitation is disclosed in the cited reference;

6.3. a detailed explanation of how each of the claims are patentable over the references cited with particularity required by 37 CFR 1.111(b) and (c);

6.4. a concise statement of the utility of the invention as defined in each of the independent claims (unless the application is a design application);

6.5. a showing of where each limitation of the claims finds support under 35 U.S.C. 112, first paragraph, in the written description of the specification. If applicable, the showing must also identify: (1) each means- (or step) plus-function claim element that invokes consideration under 35 U.S.C. 112, sixth paragraph; and (2) the structure, material, or acts in the specification that corresponds to each means- (or step) plus-function claim element that invokes consideration under 35 U.S.C. 112, sixth paragraph; if the application claims the benefit of one or more applications under title 35, United States Code, the showing must also include where each limitation of the claims finds support under 35 U.S.C. 112, first paragraph, in each such application in which such supports exists;

6.6. an identification of any cited references that may be disqualified under 35 U.S.C. 103(c).

REVIEW OF FACTS

The conditions I:1-4, II: 1-5, 5.3, 6, 6.1, 6.4, and 6.6 above are considered to have been met. However, the petition fails to comply with conditions II : 5.1, 5.2, 6.2, 6.3, and 6.5 above.

Therefore, the petition fails to meet the required conditions to be accorded special status under the accelerated examination procedure.

Discussion

When referring to "the petition" hereinbelow, the received papers under consideration include the PTO/SB/28 form, the "pre-examination search document" including pages 1-3; the "accelerated examination support document" comprising pages 1-14, and an Information Disclosure Statement including form PTO/SB/08A.

Regarding the requirements of section II element 5.1 and 5.2 outlined above, it appears the search outlined in the petition omitted a critical search area by not searching in:
class 83 subclasses 13, 522.11, 565, 745, 821
class 30 subclasses 294, 317, 319
class 33 subclasses 18.1, 27.12, 483, 562, 566.
It is noted that applicant indicated that in their search some of the class/subclasses searched were limited by the term "fabric" when large number of results were returned. The above noted class/subclasses, if they are of this type, must be searched patent by patent since the term fabric is too limiting for the scope of the claims.

Regarding the requirements of section II element 6.2 outlined above, the petition fails to identify all of the limitations in the application claims that are disclosed in each of the reference(s) and where the limitation is disclosed in each of the cited reference. As stated in the policy published in the Federal Register on June 26, 2006 (71 Fed. Reg. 36323), for each reference cited, the examination support document must include an identification of all the limitations in the claims that are disclosed by the reference specifying where the limitation is disclosed in the cited reference. The policy statement does not caveat "the independent claims", nor does it allow for grouping and general discussions. A grantable petition must delineate every limitation of every claim and identify where the equivalent limitation is disclosed in each piece of prior art cited on the IDS. As is published on www.uspto.gov/web/patents/accelerated/ in "Guidelines for Applicants under the new accelerated examination procedures"):

> *For each reference cited, the accelerated examination support document must include an identification of all the limitations in the claims that are disclosed by the reference specifying where the limitation is disclosed in the cited reference. Applicants should specify where in each of the cited references the particular claim limitations are found. This process is intended to be analogous to the analysis an examiner uses when locating a relevant prior art reference and then determining whether the reference contains the claimed limitation. For each claimed limitation, the examiner would consider the disclosure of the reference and all reasonable portions in the reference where the limitation is shown. When preparing an Office Action, the examiner would correlate the limitation to the portion of reference which best characterizes the limitation. This part of the AESD is not intended to be an exhaustive listing of every conceivable subjective interpretation of how a claim limitation may read on the reference. Applicants should point out what are considered to be the relevant representations of the limitation in the reference. A limitation may be found in more than one portion of the reference and should be pointed out, yet the intention is not to have applicants point out every*

conceivable interpretation. The USPTO will adopt a rule of reason when evaluating this portion of the AESD. Unless the representation is so deficient that it would materially effect examination of the application (e.g., numerous instances where the limitations are not shown where applicant states they are), the representation will be deemed to be sufficient for this part of the AESD.

In the instant petition, petitioner does not address each limitation and where it is (or state that it is not) found in each closest prior art. By not addressing all limitations, it is not clear whether a limitation was overlooked in the discussion of the reference or not found in the reference. In addition, the limitations need to be recited specifically as the use of the references to element a, b, etc does not clearly set forth the limitations and allow comparison of the limitation language to the reference language. Additionally, the documents from the internet listed on the IDS can not be properly evaluated since applicant has not provided the proper information for these documents. See MPEP 707.05(e)IV for citation requirements for internet documents. For example, it is not clear whether a 37 CFR 1.131 declaration would be necessary or could be filed since a publication date is not provided for the documents.

Similarly, with respect to the requirements of section II element 6.3 outlined above, the petition fails to provide a detailed explanation of how each of the claims are patentable over (each of) the reference(s) with particularity required by 37 CFR 1.111(b) and (c). Petitioners should be specific in their explanation and include the identification of specific claim limitations that support their position, where appropriate. Petitioners must distinguish each claim from each piece of prior art cited. General statements that the claims are neither anticipated nor rendered obvious by the cited references or that the references are not properly combinable will not be acceptable. The Office cannot infer or guess what petitioner believes the differences between the claims and the teachings of the prior art to be. Petitioner's statements must also be consistent and must be related to the claim language. In the instant petition, since each independent claim is of a different scope, they must be discussed separately from each other. Not all dependent claims are addressed. On page 8 of the AESD, applicant refers to the '086 reference in the discussion of the McEligot 5,289,150 reference, clarification is required.
Note, a statement that the dependent claims are allowable because the independent claims are patentable is not sufficient. This does not provide guidance to the examiner as to whether the limitations could provide patentability should the examiner find the independent claims unpatentable.

Regarding the requirements of section II element 6.5 outlined above, the requirements of this section are not met. A grantable petition requires petitioner to provide a showing of where <u>each limitation</u> of the claims finds support under 35 U.S.C. 112, first paragraph, in the written description of the specification. If applicable, the showing must also identify: (1) each means- (or step) plus-function claim element that invokes consideration under 35 U.S.C. 112, sixth paragraph; and (2) the structure, material, or acts in the specification that corresponds to each means- (or step) plus-function claim element that invokes consideration under 35 U.S.C. 112, sixth paragraph; if the application claims the benefit of one or more applications under title 35, United States Code, the showing must also include where each limitation of the claims finds support under 35 U.S.C. 112, first paragraph, in each such application in which such supports

exists. In the instant petition, there is no showing of each means-plus-function claim element. If there are none, a statement to such must be made.

DECISION

For the above-stated reasons, the petition is **dismissed**. The application will therefore be taken up by the examiner for action in its regular turn.

Petitioner is given a single opportunity to perfect the petition. Any request for reconsideration of this decision must be submitted within 1 (one) month or 30 (thirty) days, whichever is longer, (no extension of time under 37 CFR 1.136(a)) from the date of this decision in order to be considered timely. Any request for reconsideration must address all of the deficiencies indicated above.

Petitioner is reminded that, upon granting of the special status of the application on request for reconsideration, the application will be processed expeditiously. However, due to the dismissal of the instant petition, examination may not be completed within twelve months of the filing date of the application.

Any inquiry regarding this decision should be directed to Linda J. Sholl, TC 3700 Special Programs Examiner, at (571) 272-4391.

/Linda J. Sholl/
Linda J. Sholl
Special Programs Examiner
Technology Center 3700

UNITED STATES PATENT AND TRADEMARK OFFICE

Commissioner for Patents
United States Patent and Trademark Office
P.O. Box 1450
Alexandria, VA 22313-1450
www.uspto.gov

LEWIS AND ROCA LLP
1663 HWY 395, SUITE 201
MINDEN NV 89423

MAILED

AUG 22 2011

OFFICE OF PETITIONS

In re Application of :
Logan, et al. :
Application No. 12/913,694 :
Filed: 27 October, 2010 :
Attorney Docket No. KRYT-002CIA :

DECISION

This is a decision on the petition filed on 10 August, 2011, for revival of an application abandoned due to unintentional delay pursuant to 37 C.F.R. §1.137(b) .

NOTE:

It is not apparent whether the person signing the statement of unintentional delay was in a position to have firsthand or direct knowledge of the facts and circumstances of the delay at issue.

Nevertheless, such statement is being treated as having been made as the result of a reasonable inquiry into the facts and circumstances of such delay.[1] In the event that such an inquiry has not been made, Petitioner **must** make such an inquiry.

If such inquiry results in the discovery that it is not correct that the entire delay in filing the required reply from the due date for the reply until the filing of a grantable petition pursuant to 37 C.F.R. §1.137(b) was unintentional, Petitioner **must** notify the Office.

The petition pursuant to 37 C.F.R. §1.137(b) is **GRANTED**.

As to the Allegations
of Unintentional Delay

The requirements of a grantable petition pursuant to 37 C.F.R. §1.137(b) are the petition and fee therefor, a reply, a proper statement and/or showing of unintentional delay under the regulation, and, where applicable, a terminal disclaimer and fee

[1] See 37 C.F.R. §11.18(b), formerly §10.18(b) and Changes to Patent Practice and Procedure; Final Rule Notice, 62 Fed. Reg. 53131, 53178 (October 10, 1997), 1203 Off. Gaz. Pat. Office 63, 103 (October 21, 1997).

Petitioners' attentions always are directed to the guidance in the Commentary at MPEP §711.03(c)(II).

BACKGROUND

Former Counsel failed to reply timely and properly to the Notice to File Missing Parts mailed on 9 November, 2010, with reply due absent extension of time on or before 9 January, 2011.

The application went abandoned after midnight 9 January, 2011.

The Office mailed the Notice of Abandonment on 25 July, 2011.

On 22 July, 2011, Petitioner filed a revocation/power of attorney, but no other papers.

On 10 August, 2011, Petitioner filed, *inter alia*, a petition pursuant to 37 C.F.R. §1.137(b), with fee, a reply in the form of oath/declaration, fees, surcharge, and made the statement of unintentional delay.

Petitioners' attentions always are directed to the guidance in the Commentary at MPEP §711.03(c) as to the showing regarding unintentional delay and a petition pursuant to 37 C.F.R. §1.137(b).

The availability of applications and application papers online to applicants/practitioners who diligently associate their Customer Number with the respective application(s) now provides an applicant/practitioner on-demand information as to events/transactions in an application.

Out of an abundance of caution, Petitioners always are reminded that those registered to practice and all others who make representations before the Office **must** inquire into the underlying facts of representations made to the Office and support averments with the appropriate documentation–since all owe to the Office the continuing duty to disclose.[2]

STATUTES, REGULATIONS AND ANALYSIS

Congress has authorized the Commissioner to revive an application if the delay is shown to the satisfaction of the Commissioner to have been "unavoidable." 35 U.S.C. §133 (1994).[3]

---

[2] See supplement of 17 June, 1999. The Patent and Trademark Office is relying on petitioner's duty of candor and good faith and accepting a statement made by Petitioner. See Changes to Patent Practice and Procedure, 62 Fed. Reg. at 53160 and 53178, 1203 Off. Gaz. Pat. Office at 88 and 103 (responses to comments 64 and 109)(applicant obligated under 37 C.F.R. §10.18 to inquire into the underlying facts and circumstances when providing statements to the Patent and Trademark Office).

[3] 35 U.S.C. §133 provides:

35 U.S.C. §133 Time for prosecuting application.

Upon failure of the applicant to prosecute the application within six months after any action therein, of which notice has been given or mailed to the applicant, or within such shorter time, not less than thirty days, as fixed by the Commissioner in such action, the application shall be regarded as abandoned by the parties thereto, unless it be shown to the satisfaction of the Commissioner that such delay was unavoidable.

The regulations at 37 C.F.R. §1.137(a) and (b) set forth the requirements for a Petitioner to revive a previously unavoidably or unintentionally, respectively, abandoned application under this congressional grant of authority.

Unintentional delays are those that do not satisfy the very strict statutory and regulatory requirements of unavoidable delay, and, by definition, are not intentional.[4]))

As to Allegations of
Unintentional Delay

The requirements of a grantable petition pursuant to 37 C.F.R. §1.137(b) are the petition and fee therefor, a reply, a proper statement of unintentional delay under the regulation, and, where applicable, a terminal disclaimer and fee.

It appears that the requirements under the rule have been satisfied.

CONCLUSION

Accordingly, the petition pursuant to 37 C.F.R. §1.137(b) is **granted**.

The instant application is released to the Office of Patent Application Processing (OPAP) for further processing in due course.

Petitioner may find it beneficial to view Private PAIR within a fortnight of the instant decision to ensure that the revival has been acknowledged by the OPAP in response to this decision. It is noted that all inquiries with regard to status need be directed to the OPAP where that change of status must be effected—that does not occur in the Office of Petitions.

[4] Therefore, by example, an unintentional delay in the reply might occur if the reply and transmittal form are to be prepared for shipment by the US Postal Service, but other pressing matters distract one's attention and the mail is not timely deposited for shipment.

Telephone inquiries regarding this decision may be directed to the undersigned at (571) 272-3214—it is noted, however , that all practice before the Office is in writing (see: 37 C.F.R. §1.2[5]) and the proper authority for action on any matter in this regard are the statutes (35 U.S.C.), regulations (37 C.F.R.) and the commentary on policy (MPEP). Therefore, no telephone discussion may be controlling or considered authority for Petitioner's action(s).

/John J. Gillon, Jr./
John J. Gillon, Jr.
Senior Attorney
Office of Petitions

[5] The regulations at 37 C.F.R. §1.2 provide:
§1.2 Business to be transacted in writing.
All business with the Patent and Trademark Office should be transacted in writing. The personal attdance of applicants or their attorneys or agents at the Patent and Trademark Office is unnecessary. The action of the Patent and Trademark Office will be based exclusively on the written record in the Office. No attention will be paid to any alleged oral promise, stipulation, or understanding in relation to which there is disagreement or doubt.

UNITED STATES PATENT AND TRADEMARK OFFICE

Commissioner for Patents
United States Patent and Trademark Office
P.O. Box 1450
Alexandria, VA 22313-1450
www.uspto.gov

SUGHRUE MION, PLLC
2100 PENNSYLVANIA AVENUE, N.W.
SUITE 800
WASHINGTON, DC 20037

MAILED
OCT 31 2011
OFFICE OF PETITIONS

In re Application of	:	
Takashi Oyanagi et al	:	
Application No. 12/913,696	:	DECISION GRANTING PETITION
Filed: October 27, 2010	:	UNDER 37 CFR 1.313(c)(2)
Attorney Docket No. Q121513	:	

This is a decision on the petition under 37 CFR 1.313(c)(2), filed, October 31, 2011 to withdraw the above-identified application from issue after payment of the issue fee.

The petition is **GRANTED**.

The above-identified application is withdrawn from issue for consideration of a submission under 37 CFR 1.114 (request for continued examination). *See* 37 CFR 1.313(c)(2).

Petitioner is advised that the issue fee paid on September 24, 2011 in the above-identified application cannot be refunded. If, however, the above-identified application is again allowed, petitioner may request that it be applied towards the issue fee required by the new Notice of Allowance.[1]

Telephone inquiries should be directed to Irvin Dingle at (571) 272-3210.

This matter is being referred to Technology Center AU 1734 for processing of the request for continued examination under 37 CFR 1.114 and for consideration of the concurrently filed Information Disclosure Statement.

/Irvin Dingle/
Irvin Dingle
Petitions Examiner
Office of Petitions

[1] The request to apply the issue fee to the new Notice may be satisfied by completing and returning the new Issue Fee Transmittal Form PTOL-85(b), which includes the following language thereon: Commissioner for Patents is requested to apply the Issue Fee and Publication Fee (if any) or re-apply any previously paid issue fee to the application identified above. Petitioner is advised that, whether a fee is indicated as being due or not, the Issue Fee Transmittal Form **must** be completed and timely submitted to avoid abandonment. Note the language in bold text on the first page of the Notice of Allowance and Fee(s) Due (PTOL-85).

UNITED STATES PATENT AND TRADEMARK OFFICE

Commissioner for Patents
United States Patent and Trademark Office
P.O. Box 1450
Alexandria, VA 22313-1450
www.uspto.gov

SUGHRUE MION, PLLC
2100 PENNSYLVANIA AVENUE, N.W.
SUITE 800
WASHINGTON DC 20037

MAILED
MAR 16 2012
OFFICE OF PETITIONS

In re Application of	:	
Takashi Oyanagi, et al.	:	
Application No. 12/913,696	:	DECISION GRANTING PETITION
Filed: October 27, 2010	:	UNDER 37 CFR 1.313(c)(2)
Attorney Docket No. Q121513	:	

This is a decision on the petition under 37 CFR 1.313(c)(2), filed March 15, 2012, to withdraw the above-identified application from issue after payment of the issue fee.

The petition is **GRANTED**.

The above-identified application is withdrawn from issue for consideration of a submission under 37 CFR 1.114 (request for continued examination). *See* 37 CFR 1.313(c)(2).

Petitioner is advised that the issue fee paid on February 10, 2012 cannot be refunded. If, however, this application is again allowed, petitioner may request that it be applied towards the issue fee required by the new Notice of Allowance.[1]

Telephone inquiries regarding this decision should be directed to undersigned at (571) 272-1642. All other inquiries concerning the examination or status of this application should be directed to the Technology Center.

This application is being referred to Technology Center AU 1734 for processing of the request for continued examination under 37 CFR 1.114 and for consideration of the concurrently filed information disclosure statement.

/AMW/
April M. Wise
Petitions Examiner
Office of Petitions

[1] *The request to apply the issue fee to the new Notice may be satisfied by completing and returning the new Part B – Fee(s) Transmittal Form (along with any balance due at the time of submission). Petitioner is advised that the Issue Fee Transmittal Form must be completed and timely submitted to avoid abandonment of the application.*

UNITED STATES PATENT AND TRADEMARK OFFICE

UNITED STATES DEPARTMENT OF COMMERCE
United States Patent and Trademark Office
Address: COMMISSIONER FOR PATENTS
P.O. Box 1450
Alexandria, Virginia 22313-1450
www.uspto.gov

APPLICATION NO.	FILING DATE	FIRST NAMED INVENTOR	ATTORNEY DOCKET NO.	CONFIRMATION NO.
12/913,721	10/27/2010	Robert Kaim	2771-973	4433

23448 7590 12/20/2010
INTELLECTUAL PROPERTY / TECHNOLOGY LAW
PO BOX 14329
RESEARCH TRIANGLE PARK, NC 27709

EXAMINER
ESTRADA, MICHELLE

ART UNIT	PAPER NUMBER
2823	

MAIL DATE	DELIVERY MODE
12/20/2010	PAPER

Please find below and/or attached an Office communication concerning this application or proceeding.

The time period for reply, if any, is set in the attached communication.

UNITED STATES PATENT AND TRADEMARK OFFICE

Commissioner for Patents
United States Patent and Trademark Office
P.O. Box 1450
Alexandria, VA 22313-1450
www.uspto.gov

INTELLECTUAL PROPERTY / TECHNOLOGY LAW
PO BOX 14329
RESEARCH TRIANGLE PARK NC 27709

In re Application of: KAIM et al Serial No.: 12/913,721 Filed: October 27, 2010 Attorney Docket No.: 2771-973 Title: ISOTOPICALLY-ENRICHED BORON-CONTAINING COMPOUNDS, AND METHODS OF MAKING AND USING SAME	: : : : : : :	DECISION ON PETITION TO MAKE SPECIAL FOR NEW APPLICATION UNDER 37 C.F.R. § 1.102 & M.P.E.P. § 708.02

This is a decision on the petition filed on October 27, 2010 to make the above-identified application special for accelerated examination procedure under 37 C.F.R. § 1.102(d).

The petition to make the application special is **DENIED**.

REGULATION AND PRACTICE

To be eligible for accelerated examination under 37 C.F.R. § 1.102(d) and pursuant to the "Change to Practice for Petitions in Patent Applications to Make Special and for Accelerated Examination" published in the Federal Register on June 26, 2006 (71 Fed. Reg. 36323), the following conditions must be satisfied:

1. The application must be a non-reissue utility or design application filed under 37 CFR 1.111(a);
2. The application, the petition and the required fees must be filed electronically using the USPTO's electronic filing system (EFS), or EFS-web; if not filed electronically, a statement asserting that EFS and EFS-web were not available during the normal business hours;
3. The application, at the time of filing, must be complete under 37 CFR 1.51 and in condition for examination;
4. The application must contain three or fewer independent claims and twenty or fewer total claims and the claims must be directed to a single invention.

The application as filed is not eligible for the accelerated examination under 37 C.F.R. § 1.102(d) because the application was not complete under 37 CFR § 1.51 and in condition for examination at the time of filing. The mailing of a Notice to File Missing Parts or a Notice to File Corrected Application Papers is evidence that the application was not complete and in condition for examination at the time of filing. In this case, the oath or declaration was not submitted as indicated in the Notice to File Missing Parts of Nonprovisional Application mailed on November 2, 2010. Further, the application also contains more than three independent claims. A total of at least 10 independent claims were submitted.

For the above-stated reasons, the petition is **DENIED**. The application will therefore be taken up by the examiner for action in its regular turn.

Any inquiry regarding this decision should be directed to Quality Assurance Specialist Jose' G. Dees at (571) 272-1569.

Jose' G. Dees, Quality Assurance Specialist
Technology Center 2800
Semiconductors, Electrical and Optical
Systems and Components

IN THE UNITED STATES PATENT AND TRADEMARK OFFICE

APPLICANTS:	Charles Huizenga et al.
APPLICATION NO.:	12/913,725
FILED:	October 27, 2010
EXAMINER:	Albert William Paladini
TITLE:	System and Methods for Remotely Controlling an Electrical Load
GROUP ART UNIT:	2836
CONF. NO.:	4442
ATTY.DKT.NO.:	PA5347US

MAIL STOP PETITION
COMMISSIONER FOR PATENTS
P.O. BOX 1450
ALEXANDRIA, VA 22313-1450

STATEMENT OF SPECIAL STATUS
IN SUPPORT OF PETITION TO MAKE SPECIAL UNDER THE GREEN TECHNOLOGY PILOT PROGRAM

The Applicants respectfully request that the present application be advanced out of turn for examination (i.e. accelerate examination) through the submission of the present petition. This petition is presented in accordance with 37 C.F.R. § 1.102(c)(2)(ii) and the conditions set forth for such a petition as detailed in MPEP § 708.02(VI), 74 Fed. Reg. 234 (8 Dec. 2009), pp. 64666-64669, 75 Fed. Reg. 98 (21 May 2010), pp. 28554-28555, and 75 Fed. Reg. 217 (10 Nov. 2010), pp. 69049-69050.

I. Requirements and Conditions

1. The present application is a non-reissue, non-provisional utility application filed under 35 U.S.C. § 111(a). In addition, the present application was filed on or after December 8, 2009.

2. The present petition is being filed electronically before December 31, 2011.

3. Based on a review of the status of the application as reflected in the PAIR system, the Applicants believe that no first action has issued as of the date of the present petition.

4. The present petition is accompanied by the publication fee set for in 37 C.F.R. § 18(d).

5. The Applicants hereby state that the present application published on February 24, 2011, as patent publication no. US2011-0043052.

II. Eligibility under MPEP § 708.02(VI)

MPEP § 708.02(VI) notes that "[t]he U.S. Patent and Trademark Office will, on petition, accord "special" status to all patent applications for inventions which materially contribute to (A) the discovery or development of energy resources, or (B) the more efficient utilization and conservation of energy resources." MPEP § 708.02(VI).

The presently claimed invention is directed towards "retrofitting preexisting switches and actuators of a hardwired installation" for wireless control. *Specification* [0005]. The presently claimed invention seeks to address the issue of implementing wireless control to more efficiently use energy that would otherwise be wasted in highly centralized and/or highly localized systems. Such waste is described as follows:

> Highly localized control solutions may become difficult to maintain and operate in larger installations, particularly when energy conservation is of concern…The occupants may, for example, forget to switch off the light switches when leaving the office building.
> …
> [H]ighly centralized control solutions may be difficult to scale up to larger installations due to various limitations such as inflexibility to local dynamic conditions. Fluctuations in occupancy of certain building areas, changes in natural lighting levels, and differences in occupant lighting preferences may be some examples of such local dynamic conditions.

Specification, [0003]-[0004]. In contrast, the presently claimed invention allows for a focused, scalable control of electrical loads:

> FIGURE 2 is an exemplary wiring diagram **200** for circuitry including a remotely controlled electrical load. The wiring diagram **200** includes an adapted switch **205** and an adapted load **210**. The adapted switch **205** is not connected to the line-to-load **120**, as illustrated by the line break **215**. A bypass line **220** connects the line-in **115** directly to the line-to-load **120**. Bypass line **220** and line break **215** may be included within the same switch box that may house the adapted switch **205**.
> …
> [R]ule-based or algorithmic actuation logic executed by the microcontroller may make control decisions to actuate the load **110** to a certain state or level based on the information provided to the controller **230**. Such information may include time of day, occupancy information, schedules, light levels, signals from a centralized control system, automated signals from the utility or other entity (e.g., demand response), and signals transmitted from the adapter **225**.

Specification, [0020], [0023]. As such, electrical loads may be controlled in a focused, responsive manner, thereby efficiently utilizing electrical energy.

The Applicants therefore believe that the present application materially contributes to "(B) the more efficient utilization and conservation of energy resources" and is thus eligible for special status.

III. Conclusion

The Applicants believe that this Petition to Make Special has met all requirements set forth by 37 C.F.R. § 1.102(c)(2)(ii), MPEP § 708.02(VI), and 74 Fed. Reg. 234 (8 Dec. 2009), pp. 64666-64669, 75 Fed. Reg. 98 (21 May 2010), pp. 28554-28555, and 75 Fed. Reg. 217 (10 Nov. 2010), pp. 69049-69050. The Applicants therefore respectfully request that the petition be granted.

The Commissioner is hereby authorized to charge any necessary fees to Account Number 06-0600.

Respectfully submitted,
Charles Huizenga et al.

May 5, 2011

By: /Stephanie Gehling/

Stephanie Gehling, Reg. No. 65,801
Carr & Ferrell *LLP*
120 Constitution Drive
Menlo Park, California 94025
Phone (650) 812-3400
Fax (650) 812-3444

Doc Code: PET.GREEN
Document Description: Petition for Green Tech Pilot

PTO/SB/420 (12-09)
Approved for use through 05/31/2010. OMB 0651-0062
U.S. Patent and Trademark Office; U. S. DEPARTMENT OF COMMERCE
Under the Paperwork Reduction Act of 1995, no persons are required to respond to a collection of information unless it displays a valid OMB control number.

PETITION TO MAKE SPECIAL UNDER THE GREEN TECHNOLOGY PILOT PROGRAM

Attorney Docket Number: PA5347US	Application Number (if known): 12/913,725	Filing date: October 27, 2010

First Named Inventor: Charles Huizenga

Title: System and Method for Remotely Controlling an Electrical Load

APPLICANT HEREBY REQUESTS TO PARTICIPATE IN THE GREEN TECHNOLOGY PILOT PROGRAM FOR THE ABOVE-IDENTIFIED APPLICATION. See Instruction Sheet on page 2.

This petition must be timely filed electronically using the USPTO electronic filing system, EFS-Web.

1. By filing this petition:

   Applicant is requesting early publication: Applicant hereby requests early publication under 37 CFR 1.219 and the publication fee set forth in 37 CFR 1.18(d) accompanies this request. Applicant hereby rescinds under 37 CFR 1.213(b) any previous filed request that the above-identified application not be published under 35 U.S.C. 122(b).

   If the application has been published, the petition must still be accompanied by the publication fee set forth in 37 CFR 1.18(d) and a statement that the application has been published.

2. By filing this petition: applicant is agreeing to make an election without traverse in a telephonic interview and elect an invention that meets the eligibility requirement and classification requirement set forth in the notice entitled "Pilot Program for Green Technologies Including Greenhouse Gas Reduction" that was published in the Federal Register if the Office determines that the claims are not obviously directed to a single invention.

3. This request is accompanied by statements of special status for the eligibility requirement.

4. The application contains no more than three (3) independent claims and twenty (20) total claims.

5. The application does not contain any multiple dependent claims.

6. Other attachments: _____

Signature /Stephanie Gehling/	Date May 5, 2011
Name (Print/Typed) Stephanie Gehling	Registration Number 65,801

***Note**: Signatures of all the inventors or assignees of record of the entire interest or their representative(s) are required in accordance with 37 CFR 1.33 and 11.18. Please see 37 CFR 1.4(d) for the form of the signature. If necessary, submit multiple forms for more than one signature, see below*.*

☐ *Total of 1 forms are submitted.

The information is required to obtain or retain a benefit by the public which is to file (and by the USPTO to process) an application. Confidentiality is governed by 35 U.S.C. 122 and 37 CFR 1.11 and 1.14. This collection is estimated to take 12 hours to complete, including gathering, preparing, and submitting the completed application form to the USPTO. Time will vary depending upon the individual case. Any comments on the amount of time you require to complete this form and/or suggestions for reducing this burden, should be sent to the Chief Information Officer, U.S. Patent and Trademark Office, U.S. Department of Commerce, P.O. Box 1450, Alexandria, VA 22313-1450. DO NOT SEND FEES OR COMPLETED FORMS TO THIS ADDRESS. **SEND TO: Commissioner for Patents, P.O. Box 1450, Alexandria, VA 22313-1450.**

If you need assistance in completing the form, call 1-800-PTO-9199 and select option 2.

Under the Paperwork Reduction Act of 1995, no persons are required to respond to a collection of information unless it displays a valid OMB control number.

Instruction Sheet for Petition to Make Special Under the Green Technology Pilot Program

(Not to be Submitted to the USPTO)

The following is a summary of the requirements (for more information see notice "Pilot Program for Green Technologies Including Greenhouse Gas Reduction" available on the USPTO web site at http://www.uspto.gov/web/offices/pac/dapp/ogsheet.html):

(1) The application must be a non-reissue, non-provisional utility application filed under 35 U.S.C. 111(a), or an international application that has entered the national stage in compliance with 35 U.S.C. 371. The application must be previously filed before the publication date of the notice cited above. Reexamination proceedings are excluded from this pilot program.

(2) The application must be classified in one of the U.S. classifications listed in section VI of the notice cited above at the time of examination.

(3) The application must contain three or fewer independent claims and twenty or fewer total claims. The application must not contain any multiple dependent claims. For an application that contains more than three independent claims or twenty total claims, or multiple dependent claims, applicant must file a preliminary amendment in compliance with 37 CFR 1.121 to cancel the excess claims and/or the multiple dependent claims at the time the petition to make special is filed.

(4) The claims must be directed to a single invention that materially enhances the quality of the environment, or that materially contributes to: (1) the discovery or development of renewable energy resources; (2) the more efficient utilization and conservation of energy resources; or (3) green house gas emission reduction (see the eligibility requirements of sections II and III of the notice cited above). The petition must include a statement that, if the USPTO determines that the claims are directed to multiple inventions (e.g., in a restriction requirement), applicant will agree to make an election without traverse in a telephonic interview, and elect an invention that meets the eligibility requirements in section II or III of the notice cited above and is classified in one of the U.S. classifications listed in section VI of the notice cited above.

(5) The petition to make special must be timely filed electronically using the USPTO electronic filing system, EFS-Web, and selecting the document description of "Petition for Green Tech Pilot" on the EFS-Web screen. Applicant should use form PTO/SB/420, which will be available as a Portable Document Format (PDF) fillable form in EFS-Web and on the USPTO Web site.

(6) The petition to make special must be filed at least one day prior to the date that a first Office action (which may be an Office action containing only a restriction requirement) appears in the Patent Application Information Retrieval (PAIR) system. Applicant may check the status of the application using PAIR.

(7) The petition to make special must be accompanied by a request for early publication in compliance with 37 CFR 1.219 and the publication fee set forth in 37 CFR 1.18(d).

Privacy Act Statement

The **Privacy Act of 1974 (P.L. 93-579)** requires that you be given certain information in connection with your submission of the attached form related to a patent application or patent. Accordingly, pursuant to the requirements of the Act, please be advised that: (1) the general authority for the collection of this information is 35 U.S.C. 2(b)(2); (2) furnishing of the information solicited is voluntary; and (3) the principal purpose for which the information is used by the U.S. Patent and Trademark Office is to process and/or examine your submission related to a patent application or patent. If you do not furnish the requested information, the U.S. Patent and Trademark Office may not be able to process and/or examine your submission, which may result in termination of proceedings or abandonment of the application or expiration of the patent.

The information provided by you in this form will be subject to the following routine uses:

1. The information on this form will be treated confidentially to the extent allowed under the Freedom of Information Act (5 U.S.C. 552) and the Privacy Act (5 U.S.C 552a). Records from this system of records may be disclosed to the Department of Justice to determine whether disclosure of these records is required by the Freedom of Information Act.

2. A record from this system of records may be disclosed, as a routine use, in the course of presenting evidence to a court, magistrate, or administrative tribunal, including disclosures to opposing counsel in the course of settlement negotiations.

3. A record in this system of records may be disclosed, as a routine use, to a Member of Congress submitting a request involving an individual, to whom the record pertains, when the individual has requested assistance from the Member with respect to the subject matter of the record.

4. A record in this system of records may be disclosed, as a routine use, to a contractor of the Agency having need for the information in order to perform a contract. Recipients of information shall be required to comply with the requirements of the Privacy Act of 1974, as amended, pursuant to 5 U.S.C. 552a(m).

5. A record related to an International Application filed under the Patent Cooperation Treaty in this system of records may be disclosed, as a routine use, to the International Bureau of the World Intellectual Property Organization, pursuant to the Patent Cooperation Treaty.

6. A record in this system of records may be disclosed, as a routine use, to another federal agency for purposes of National Security review (35 U.S.C. 181) and for review pursuant to the Atomic Energy Act (42 U.S.C. 218(c)).

7. A record from this system of records may be disclosed, as a routine use, to the Administrator, General Services, or his/her designee, during an inspection of records conducted by GSA as part of that agency's responsibility to recommend improvements in records management practices and programs, under authority of 44 U.S.C. 2904 and 2906. Such disclosure shall be made in accordance with the GSA regulations governing inspection of records for this purpose, and any other relevant (*i.e.*, GSA or Commerce) directive. Such disclosure shall not be used to make determinations about individuals.

8. A record from this system of records may be disclosed, as a routine use, to the public after either publication of the application pursuant to 35 U.S.C. 122(b) or issuance of a patent pursuant to 35 U.S.C. 151. Further, a record may be disclosed, subject to the limitations of 37 CFR 1.14, as a routine use, to the public if the record was filed in an application which became abandoned or in which the proceedings were terminated and which application is referenced by either a published application, an application open to public inspection or an issued patent.

9. A record from this system of records may be disclosed, as a routine use, to a Federal, State, or local law enforcement agency, if the USPTO becomes aware of a violation or potential violation of law or regulation.

UNITED STATES PATENT AND TRADEMARK OFFICE

UNITED STATES DEPARTMENT OF COMMERCE
United States Patent and Trademark Office
Address: COMMISSIONER FOR PATENTS
P.O. Box 1450
Alexandria, Virginia 22313-1450
www.uspto.gov

APPLICATION NO.	FILING DATE	FIRST NAMED INVENTOR	ATTORNEY DOCKET NO.	CONFIRMATION NO.
12/913,725	10/27/2010	Charles Huizenga	PA5347US	4442

22830 7590 06/29/2011
CARR & FERRELL LLP
120 CONSTITUTION DRIVE
MENLO PARK, CA 94025

EXAMINER
PALADINI, ALBERT WILLIAM

ART UNIT	PAPER NUMBER
2836	

MAIL DATE	DELIVERY MODE
06/29/2011	PAPER

Please find below and/or attached an Office communication concerning this application or proceeding.

The time period for reply, if any, is set in the attached communication.

UNITED STATES PATENT AND TRADEMARK OFFICE

Commissioner for Patents
United States Patent and Trademark Office
P.O. Box 1450
Alexandria, VA 22313-1450
www.uspto.gov

CARR & FERRELL LLP
120 CONSTITUTION DRIVE
MENLO PARK CA 94025

In re Application of	:	
HUIZENGA et al.	:	DECISION ON PETITION
Application No. 12/913,725	:	TO MAKE SPECIAL UNDER
Filed: October 27, 2010	:	THE GREEN TECHNOLOGY
Attorney Docket No. PA5347US	:	PILOT PROGRAM

This is a decision on the petition under 37 CFR 1.102, filed on May 05, 2011, to make the above-identified application special under the pilot program for applications pertaining to Green Technologies as set forth 74 Federal Register Notice 64666 (December 8, 2009) and amended by 75 Federal Register Notice 28554 (May 21, 2010) and 75 Federal Register Notice 69049 (November 10, 2010).

The petition is **DISMISSED**.

If reconsideration of this decision is desired, a petition for reconsideration must be filed within ONE (1) MONTH OR THIRTY (30) DAYS from the mail date of this decision, whichever is longer. No extension of this time limit can be granted under 37 CFR 1.136(a) or (b). The petition for reconsideration should include an exhaustive attempt to provide the lacking item(s) noted below, since, after a decision on the petition for reconsideration, no further reconsideration or review of the matter will be undertaken by the Director.

A grantable petition to make an application special under 37 CFR 1.102 and the pilot program as set forth in 74 FR 64666 must be directed to a nonprovisional application filed under 35 USC 111(a) or be a national stage entry under 35 USC 371, exclusive of any reissue applications and be filed prior to the date of the notice, December 8, 2009.

In order to qualify for special status, the following requirements must be met. 1) The application must have no more than 3 independent claims and no more than 20 total claims. 2) The application must not contain any multiple dependent claims. 3) The petition must state the basis for seeking special status, i.e., the claimed invention either: A) materially enhances the quality of the environment or B) materially contributes to: i) the discovery or development of renewable energy resources, ii) the more efficient utilization and conservation of energy resources, or iii) greenhouse gas emission reduction. 4) If the disclosure is not clear on its face that the claimed invention materially contributes under category (A) or (B), the petition must be accompanied by a statement by the applicant, assignee, or an attorney/agent registered to practice before the Office explaining how the materiality standard is met. 5) A statement that applicant will agree to

make an election without traverse in a telephonic interview if a restriction requirement is made by the examiner. 6) The petition to make special must be filed electronically. 7) The petition must be filed at least one day prior to the date that a first Office Action appears in the Patent Application Information Retrieval (PAIR) system. 8) The petition must be accompanied by a request for early publication in compliance with 37 CFR 1.219 and include the publication fee as set forth in 37 CFR 1.18(d).

The requirement for a fee for consideration of the petition to make special for applications pertaining to Green Technologies has been waived.

The petition lacks item 4.

In regard to item 4, applicant's statement pertaining to how the materiality standard is met does not satisfy the requirements for this pilot. The petition alleges that the claimed invention contributes to more efficient utilization and conservation of energy. The claims are generally directed to a wireless system to control an electric load. The materiality standard does not permit an applicant to speculate as to how a hypothetical end-user might specially apply the invention in a manner that could contribute to more efficient utilization and conservation of energy. Any argument that the claimed invention can be used to reduce energy consumption is considered speculate as to how a hypothetical end-user might specially apply the claimed invention. It is not readily apparent how the claimed invention results in <u>more efficient</u> utilization of energy resources (which is required for basis B ii above). The petition also alleges that the claimed invention contributes to the discovery or development of renewable energy resources. It is not seen how the claimed invention is in any way related to renewable energy resources.

Any reconsideration of this decision should be submitted through the USPTO electronic filing system, EFS-Web, and selecting the document description of "Petition for Green Tech Pilot" on the EFS-Web screen.

Telephone inquiries concerning this decision should be directed to Lee W. Young at 571-272-4549.

The application is being forwarded to the Technology Center Art Unit 2836 for action in its regular turn.

Lee W. Young
Quality Assurance Specialist
Technology Center 2600

UNITED STATES PATENT AND TRADEMARK OFFICE

Commissioner for Patents
United States Patent and Trademark Office
P.O. Box 1450
Alexandria, VA 22313-1450
www.uspto.gov

CHARMASSON, BUCHACA & LEACH, LLP
2635 Camino Del Rio South
Suite 102
SAN DIEGO CA 92108

MAILED

OCT 19 2011

OFFICE OF PETITIONS

In re Application of	:	
Anton K. Simpson	:	
Application No. 12/913740	:	ON PETITION
Filing or 371(c) Date: 01/14/2009	:	
Attorney Docket Number:	:	
LDC-1021	:	

This is a decision on the Petition for Revival of an Application for Patent Abandoned Unintentionally Under 37 C.F.R. § 1.137, filed September 22, 2011.

This Petition is hereby **granted**.

The above-identified application became abandoned for failure to timely reply to the Notice to File Corrected Application Papers ("Notice"), mailed November 8, 2010. The Notice set a two (2) month period for reply. Extensions of time under 37 CFR 1.136(a) were available. No complete and proper reply to the Notice having been received, the application became abandoned on January 9, 2011. A Notice of Abandonment was mailed on July 25, 2011.

The petition satisfies the conditions for revival pursuant to the provisions of 37 CFR 1.137(b) in that the petition includes (1) the reply to the Notice; (2) the petition fee; and (3) the required statement of unintentional delay. Accordingly, the reply is accepted as having been unintentionally delayed.

This application is being referred to the Office of Patent Application Processing for processing of the reply, and for continued processing in due course.

Telephone inquiries concerning this decision should be directed to the undersigned at (571) 272-3232.

/DLW/

Derek L. Woods
Attorney
Office of Petitions

UNITED STATES PATENT AND TRADEMARK OFFICE

Commissioner for Patents
United States Patent and Trademark Office
P.O. Box 1450
Alexandria, VA 22313-1450
www.uspto.gov

PERKINS COIE LLP
PATENT-SEA
P.O. BOX 1247
SEATTLE WA 98111-1247

MAILED

NOV 29 2010

OFFICE OF PETITIONS

In re Application of	:	
Roy E. MCALISTER	:	
Application No. 12/913,744	:	DECISION ON PETITION
Filed: October 27, 2010	:	TO MAKE SPECIAL UNDER
Attorney Docket No. 695458039US	:	37 CFR 1.102(c)(1)
	:	

This is a decision on the petition under 37 CFR 1.102(c)(1), filed October 27, 2010, to make the above-identified application special based on applicant's age as set forth in M.P.E.P. § 708.02, Section IV.

The petition is **GRANTED.**

A grantable petition to make an application special under 37 CFR 1.102(c)(1) and MPEP § 708.02, Section IV: Applicant's Age must be accompanied by evidence showing that at least one of the applicants is 65 years of age, or more, such as a birth certificate or a statement by applicant. No fee is required

The instant petition includes a statement made by registered attorney Cameron B. Pilling, which will be treated as the result of the attorney having evidence that at least one of the applicants is 65 years of age or more. In the event that such evidence is not with the attorney, the Office should be notified immediately. Accordingly, the above-identified application has been accorded "special" status.

Telephone inquiries concerning this decision should be directed to the undersigned at (571) 272-6735.

All other inquiries should be directed to the Office of Data Management at (571) 271-4000.

This matter is being referred to the Office of Data Management for processing. This application will be accorded "special" status when pre-examination processing is done.

/DCG/
Diane C. Goodwyn
Petitions Examiner
Office of Petitions

UNITED STATES PATENT AND TRADEMARK OFFICE

Commissioner for Patents
United States Patent and Trademark Office
P.O. Box 1450
Alexandria, VA 22313-1450
www.uspto.gov

PERKINS COIE LLP
PATENT-SEA
P.O. BOX 1247
SEATTLE WA 98111-1247

MAILED

NOV 29 2010

OFFICE OF PETITIONS

In re Application of	:	
Roy E. MCALISTER	:	
Application No. 12/913,749	:	DECISION ON PETITION
Filed: October 27, 2010	:	TO MAKE SPECIAL UNDER
Attorney Docket No. 695458059US	:	37 CFR 1.102(c)(1)
	:	

This is a decision on the petition under 37 CFR 1.102(c)(1), filed October 27, 2010, to make the above-identified application special based on applicant's age as set forth in M.P.E.P. § 708.02, Section IV.

The petition is **GRANTED.**

A grantable petition to make an application special under 37 CFR 1.102(c)(1) and MPEP § 708.02, Section IV: Applicant's Age must be accompanied by evidence showing that at least one of the applicants is 65 years of age, or more, such as a birth certificate or a statement by applicant. No fee is required

The instant petition includes a statement made by registered attorney Susan D. Betcher, which will be treated as the result of the attorney having evidence that at least one of the applicants is 65 years of age or more. In the event that such evidence is not with the attorney, the Office should be notified immediately. Accordingly, the above-identified application has been accorded "special" status.

Telephone inquiries concerning this decision should be directed to the undersigned at (571) 272-6735.

All other inquiries should be directed to the Office of Data Management at (571) 271-4000.

This matter is being referred to the Office of Data Management for processing. This application will be accorded "special" status when pre-examination processing is done.

/DCG/
Diane C. Goodwyn
Petitions Examiner
Office of Petitions

PTO/SB/20PCT-KR (06-10)
Approved for use through 01/31/2012. OMB 0651-0058
U.S. Patent and Trademark Office; U.S. DEPARTMENT OF COMMERCE
Under the Paperwork Reduction Act of 1995, no persons are required to respond to a collection of information unless it displays a valid OMB control number.

REQUEST FOR PARTICIPATION IN THE PATENT COOPERATION TREATY – PATENT PROSECUTION HIGHWAY (PCT-PPH) PILOT PROGRAM BETWEEN THE KOREAN INTELLECTUAL PROPERTY OFFICE (KIPO) AND THE USPTO

Application No.:	12/913,749-Conf. #4512	Filing Date:	October 27, 2010
First Named Inventor:	Roy E. McAlister, P.E.		
Title of the Invention:	ADAPTIVE CONTROL SYSTEM FOR FUEL INJECTORS AND IGNITERS		

THIS REQUEST FOR PARTICIPATION IN THE PCT-PPH PILOT PROGRAM ALONG WITH THE REQUIRED DOCUMENTS MUST BE SUBMITTED VIA EFS-WEB. INFORMATION REGARDING EFS-WEB IS AVAILABLE AT HTTP://WWW.USPTO.GOV/EBC/EFS_HELP.HTML.

APPLICANT HEREBY REQUESTS PARTICIPATION IN THE PCT-PPH PROGRAM AND PETITIONS TO MAKE THE ABOVE-IDENTIFIED APPLICATION SPECIAL UNDER THE PCT-PPH PROGRAM.

The above-identified application is (1) a national stage entry of the corresponding PCT application, or (2) a national stage entry of another PCT application which claims priority to the corresponding PCT application, or (3) a national application that claims domestic/ foreign priority to the corresponding PCT application, or (4) a national application which forms the basis for the priority claim in the corresponding PCT application, or (5) a continuing application of a U.S. application that satisfies one of (1) to (4) above, or (6) a U.S. application that claims domestic benefit to a U.S. provisional application which forms the basis for the priority claim in the corresponding PCT application.

The corresponding PCT application number(s) is/are: PCT/US10/54364

The international date of the corresponding PCT application(s) is/are: October 27, 2010

I. **List of Required Documents:**

a. **A copy of the latest international work product (WO/ISA, WO/IPEA, or IPER) in the above-identified corresponding PCT application(s).**

[x] Is attached.

[ ] Is not attached because the document is already in the U.S. application.

b. **A copy of all claims which were indicated as having novelty, inventive step and industrial applicability in the above-identified corresponding PCT appliction(s).**

[ ] Is attached.

[ ] Is not attached because the document is already in the U.S. application.

c. **English translations of the documents in a. and b. above are attached (if the documents are not in the English language). A statement that the English translation is accurate is attached for the document in b. above.**

Under the Paperwork Reduction Act of 1995, no persons are required to respond to a collection of information unless it displays a valid OMB control number.

REQUEST FOR PARTICIPATION IN THE PCT-PPH PILOT PROGRAM BETWEEN THE KIPO AND THE USPTO
(continued)

Application No.:	12/913,749-Conf. #4512
First Named Inventor:	Roy E. McAlister, P.E.

d. **(1) An information disclosure statement listing the documents cited in the international work products (ISR, WO/ISA, WO/IPEA, IPER) of the corresponding PCT application.**

[ ] Is attached.

[x] Has already been filed in the above-identified U.S. application on Sept 26, 2011 and Sept 27, 2011

(2) Copies of all documents (except) for U.S. patents or U.S. patent application publications)

[ ] Are attached.

[x] Have already been filed in the above-identified U.S. application on Sept 26, 2011 and Sept 27, 2011

II. Claims Correspondence Table:

Claims in US Application	Patentable Claims in the corresponding PCT Application	Explanation regarding the correspondence
1-20	1-20	The claims pending in the US application are identical to their corresponding claims in the PCT Application.

III. All the claims in the US application sufficiently correspond to the patentable claims in the corresponding PCT application.

Signature	/sdb/	Date	1/23/12
Name (Print/Typed)	Susan D. Betcher	Registration Number	43,498

(12) INTERNATIONAL APPLICATION PUBLISHED UNDER THE PATENT COOPERATION TREATY (PCT)

(19) World Intellectual Property Organization
International Bureau

(43) International Publication Date
16 June 2011 (16.06.2011)

PCT

(10) International Publication Number
WO 2011/071608 A2

(51) International Patent Classification:
F02D 41/20 (2006.01) *F02D 41/14* (2006.01)
F02D 41/04 (2006.01) *F02M 51/02* (2006.01)

(21) International Application Number:
PCT/US2010/054364

(22) International Filing Date:
27 October 2010 (27.10.2010)

(25) Filing Language: English

(26) Publication Language: English

(30) Priority Data:

12/653,085	7 December 2009 (07.12.2009)	US
61/304,403	13 February 2010 (13.02.2010)	US
61/312,100	9 March 2010 (09.03.2010)	US
12/841,135	21 July 2010 (21.07.2010)	US
12/841,149	21 July 2010 (21.07.2010)	US
12/804,508	21 July 2010 (21.07.2010)	US
12/804,509	21 July 2010 (21.07.2010)	US
12/804,510	21 July 2010 (21.07.2010)	US
12/841,146	21 July 2010 (21.07.2010)	US
12/841,170	21 July 2010 (21.07.2010)	US

(72) Inventor; and
(71) Applicant : **MCALISTER, Roy, E.** [US/US]; 2350 W Shangri La, Phoenix, AZ 85029 (US).

(74) Agents: **BETCHER, Susan, D.** et al.; Perkins Coie LLP, P.O. Box 1247, Seattle, WA 98111-1247 (US).

(81) Designated States *(unless otherwise indicated, for every kind of national protection available)*: AE, AG, AL, AM, AO, AT, AU, AZ, BA, BB, BG, BH, BR, BW, BY, BZ, CA, CH, CL, CN, CO, CR, CU, CZ, DE, DK, DM, DO, DZ, EC, EE, EG, ES, FI, GB, GD, GE, GH, GM, GT, HN, HR, HU, ID, IL, IN, IS, JP, KE, KG, KM, KN, KP, KR, KZ, LA, LC, LK, LR, LS, LT, LU, LY, MA, MD, ME, MG, MK, MN, MW, MX, MY, MZ, NA, NG, NI, NO, NZ, OM, PE, PG, PH, PL, PT, RO, RS, RU, SC, SD, SE, SG, SK, SL, SM, ST, SV, SY, TH, TJ, TM, TN, TR, TT, TZ, UA, UG, US, UZ, VC, VN, ZA, ZM, ZW.

(84) Designated States *(unless otherwise indicated, for every kind of regional protection available)*: ARIPO (BW, GH, GM, KE, LR, LS, MW, MZ, NA, SD, SL, SZ, TZ, UG, ZM, ZW), Eurasian (AM, AZ, BY, KG, KZ, MD, RU, TJ, TM), European (AL, AT, BE, BG, CH, CY, CZ, DE, DK, EE, ES, FI, FR, GB, GR, HR, HU, IE, IS, IT, LT, LU, LV, MC, MK, MT, NL, NO, PL, PT, RO, RS, SE, SI, SK,

[Continued on next page]

(54) Title: ADAPTIVE CONTROL SYSTEM FOR FUEL INJECTORS AND IGNITERS

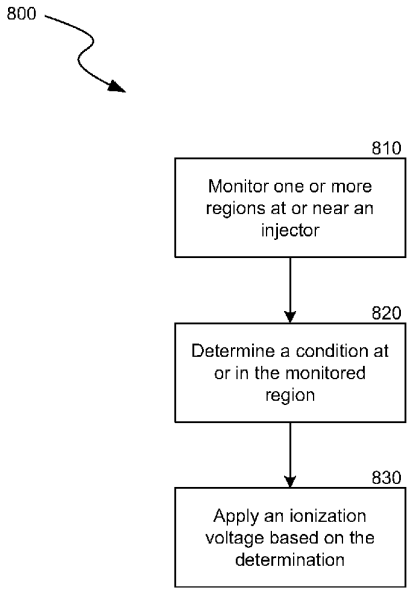

Fig. 8

(57) Abstract: The present disclosure is directed to systems and methods for adjusting the operation of a gasoline-fueled engine based on monitored conditions within a combustion chamber of the engine. In some cases, the system monitors regions within the combustion chamber, identifies or determines a satisfactory condition, and applies an ionization voltage to a fuel injector to initiate a combustion event during the satisfactory condition. In some cases, the system monitors the conditions within the combustion chamber, determines a monitored condition is associated with an adjustment, and adjusts a parameters of a combustion event in order to adjust ionization levels within a combustion chamber.

WO 2011/071608 A2

SM, TR), OAPI (BF, BJ, CF, CG, CI, CM, GA, GN, GQ, GW, ML, MR, NE, SN, TD, TG).

Published:

— *without international search report and to be republished upon receipt of that report (Rule 48.2(g))*

ADAPTIVE CONTROL SYSTEM FOR FUEL INJECTORS AND IGNITERS

TECHNICAL FIELD

[0001] The following disclosure relates generally to integrated fuel injectors and igniters and associate components for storing, injecting, and igniting various fuels.

BACKGROUND

[0002] Gasoline-fueled engines are generally designed to achieve manufacturing cost savings that allow intentional design inefficiencies and losses due to the control method and purpose of throttling (restricting) the air entering the engine and due to the production of homogeneous air-fuel mixtures that are delivered to the combustion chambers. Gasoline engines are operated throughout the designed operating speeds or RPM (Revolutions Per Minute) and torque range at approximately stoichiometric air/fuel proportions to form a homogeneous mixture that is spark ignitable everywhere in the combustion chamber. Control of the power produced is a function of the degree of throttling to reduce the air intake and corresponding reduction (limitation) of the amount of fuel that is added. In modern engines that achieve some degree of toxic emissions reduction, fuel is proportioned in response to the magnitude of the intake system vacuum to provide a homogeneous charge that is on the surplus air or "lean fuel side" of the stoichiometric air/fuel ratio for complete combustion.

[0003] Most homogeneous charge engines are operated with variable restriction (throttling) of the air entering the intake system and with electronically operated fuel injectors that spray fuel into the intake system at each location or intake manifold port of a mechanical cam operated intake valve. Thus the cam-operated intake valve provides the final timing of the entry into each combustion chamber of the resulting homogeneous air-fuel mixture.

[0004] At “idle” (lowest sustained RPM) and during deceleration of the engine, which produce the highest intake vacuum conditions, about 14.7 mass parts of air is

mixed with a little less than one mass part of fuel (or about 14.7:1) to form a homogeneous charge with the least amount of energy release upon combustion. When accelerating and traveling at a higher RPM, more air is throttled into the intake system and more fuel can be added to maintain the approximate 14.7:1 air/fuel proportions in the homogeneous charge that is provided for cruise and higher power operation.

[0005] Maintaining a vacuum in the intake system of an engine requires considerable power, which must be subtracted from the output power that the engine can deliver. In all modes of operation including idle, cruise and acceleration, substantial power of an engine is spent on parasitic losses, including the power required for intake vacuum maintenance.

[0006] Diesel engines do not throttle the air entering the combustion chambers, which provides the advantage of avoiding the loss of output power that is required to maintain an intake system vacuum. The air/fuel ratios for diesel engines under full load are between 17:1 and 29:1. When idling or under no load, this ratio can exceed 145:1. Within the combustion chamber of a direct injection operated diesel, localized air/fuel ratios vary. Because the diesel fuel injection is designed to deliver liquid fuel as streams or droplets, it may not be possible to initially achieve a homogenous mixing of the fuel with the air.

[0007] Ignition and sustained combustion can only occur after "atomization" in which high velocity sprays of liquid fuel droplets evaporate by penetrating sufficient hot air and then "crack" by penetrating additional hot air to break large molecules into smaller components that can be oxidized to release sufficient heat to produce a continuing chain reaction.

[0008] High-pressure diesel fuel injection results in better fuel atomization to reduce the amount of fuel that fails to complete the oxidation sequence to thus allow various pollutants including visible smoke particles to pass out of the combustion chamber. Recent advancements have provided increased fuel injection pressures, which causes more heat to be generated in the pumping system and requires greater power to be diverted from the engine's output power in order to accomplish the fuel pumping and fuel re-circulation requirements for cooling the high pressure fuel delivery circuits.

[0009] Combustion characteristics of diesel fuel as a result of droplet evaporation and chemical cracking in compression heated air is a function of variables such as: Compression ratio, Barometric pressure, Supercharge pressure, Temperature of air entering the combustion chamber, Temperature of the compressed air after heat losses to the piston, cylinder, and head, Timing of start of injection, Injection pressure, Injection orifice size, number, and orientation, Injection duration, Injector discharge curve, and so on.

[0010] Given particular magnitudes of compression ratio, barometric pressure, supercharge pressure, and the air temperature at the beginning of compression, and the temperature of the compressed air after heat losses to the piston, cylinder, and engine head components, the electronic timing of the start of direct diesel fuel injection may be adjusted to meet the torque requirement or engine load. In high speed diesel engines for automotive applications, optimized injection at start up, idle or no external load is about 2 crankshaft degrees Before Top Dead Center (BTDC) to 4 degrees After Top Dead Center (ATDC) in some instances to allow quicker start up.

[0011] At part load timing of the beginning of diesel fuel may be adjusted to about 8 degrees BTDC to 4 degrees ATDC. Because of the considerable "diesel delay" time needed for the diesel fuel droplets to evaporate and crack depending upon the temperature and pressure of the air as a result of the rate and degree of compression and resulting heat losses to the piston, cylinder, and engine head components, the timing of the beginning of diesel fuel injection must be advanced. To produce maximum rated toque for full load, the start of diesel fuel injection may begin at 8 to 16 degrees BTDC and the duration of combustion at the maximum fuel rate varies between about 40 to 70 degrees of crankshaft rotation.

[0012] Timing the initiation of diesel fuel injection too early during the compression stroke causes considerable combustion when the piston is still rising, reducing net torque production and compromised thermal efficiency because of greater heat losses to the piston, cylinder and engine head components. This results in an increased rate of fuel consumption and engine maintenance. However such operation may be purposely done to increase the heat delivery to catalytic reactors and other after treatment equipment. The sharp rise in cylinder pressure

during compression also increases bearing and ring wear and engine noise. In comparison, if the beginning of diesel fuel injection is too late, net torque is also reduced and incomplete combustion results, increasing the emissions of unburned hydrocarbons.

[0013] In more popular homogeneous charge engines with port fuel injected gasoline operation, the amount of fuel injected is directly proportional to the degree that the air is throttled and the injector "open" or opening time. In comparison, a modern diesel injector will more nearly vary the mass flow of diesel fuel as functions of the difference between the injection and combustion chamber pressures, the density of the fuel, which is temperature dependent, and the dynamic compressibility of the fuel.

[0014] In order to cope with the variables noted previously and in attempts to reduce problematic emissions, electronically controlled and operated diesel fuel injectors may provide several injection periods for different compromises and purposes including:

[0015] First-injection of short duration to reduce the rate of combustion pressure rise, which may reduce combustion noise and to some degree reduce Oxides of Nitrogen (NOx) production during rapid pressure rise "diesel knock" combustion;

[0016] Second-injection of the major portion of fuel delivery is then added to provide the main injection phase;

[0017] Third-injection may be added in an attempt to penetrate less spent air to reduce soot emissions by kindling an after-burn to consume otherwise quenched hydrocarbons that failed to burn completely as a result of the first and second injections; and

[0018] Fourth-injection at up to 180 crankshaft degrees later, to provide a retarded post-injection to serve as a non-power producing re-heating purpose, particularly for enabling NOx accumulator-type catalytic converters and/or to sufficiently increase the average exhaust gas temperature for "burning out" collected hydrocarbon particles in a process called "regeneration" of a ceramic particulate filter.

[0019] Typical diesel fuel injection amounts vary from about 1 cubic millimeter for First-injection or pre-injection up to about 50 cubic millimetres for full-load delivery. The injection duration is 1-2 milliseconds.

[0020] Most automotive types of diesel engines utilize common rail delivery of fuel to each diesel fuel injector. This provides separation of fuel pressurization and fuel injection functions and thus a common rail system is generally able to supply fuel over a broader range of injection timing and pressure values than previous systems with combined mechanical pressurization and timing operations.

[0021] A high-pressure pump pressurizes the fuel for delivery by the common rail. A master fuel rail control and pressure regulation valve allows the fuel pressure to be maintained at a level set by the Electronic Control Unit. The common rail pressure that is maintained serves each fuel injector. An electronic computer (ECU) receives sensor inputs of the fuel pressure, engine speed, camshaft position, accelerator pedal travel, supercharger boost pressure, intake air temperature, and engine coolant temperature. Depending upon the application, additional sensors may report vehicle speed, exhaust temperature, exhaust oxygen concentration, catalyst backpressure, and particulate trap back pressure.

[0022] In most instances common rail diesel engines still require glow plugs to preheat the air to enable start-up in cold weather. In addition to controlling the glow plugs, additional functions of the ECU are to adjust the mechanical supercharger or exhaust driven turbocharger boost pressure, the degree of exhaust gas recirculation and in some engines the intake port tunable flaps to induce swirl or other intake air flow momentums.

[0023] The high-pressure pumps supply diesel fuel at up to 1600 Bar (23,500 PSI) through the common rail system. Such pumps are driven from the crankshaft and in many instances are radial piston designs. Lubrication of these very high-pressure pump components is by carefully filtered diesel fuel. A typical pump requires the engine to contribute up to about 4kW from the net output capacity.

[0024] Fuel pressure control is typically performed by a solenoid valve in which the valve opening is varied by pulse width modulation at a frequency of 1 KHz. At times when the pressure control valve is not activated, an internal spring maintains a fuel pressure of about 100 Bar (1500 PSI). At times that the valve is activated, force

applied by the electromagnetic plunger aids the spring, reducing the net opening of the valve to increase the delivered fuel pressure. Fuel pressure control valves may also act as a mechanical pressure damper to reduce high frequency pressure pulses from the pump.

[0025] Two approaches to diesel engine emissions reduction are popular: Exhaust gas recirculation, and Urea addition in the exhaust system to provide hydrogen-induced reduction of oxides of nitrogen that have been produced by the combustion chamber operations.

[0026] Exhaust gas recirculation provides a portion of the exhaust gas for mixing with the intake air charge to reduce oxides of nitrogen emissions. It reduces the oxygen concentration and availability in the combustion chamber, the peak combustion temperature, and the exhaust gas temperature. It also greatly reduces the volumetric efficiency of the engine. Recirculation rates may be as high as 50 percent during parts of the operating conditions.

[0027] Recirculation causes many of the same efficiency compromises that throttling the air produces in homogeneous charge engine operation.

[0028] Unburned fuel oxidation-type catalytic converters are used to reduce hydrocarbon and carbon monoxide emissions by promoting reaction of unburned fuel constituents with oxygen that is preheated in the combustion chamber. Unburned fuel constituents such as carbon monoxide and hydrocarbons that escape through the exhaust valve of the combustion chamber are oxidized to form water and carbon dioxide. In order to rapidly reach their operating temperature, this type of catalytic converter is fitted close to the engine.

[0029] Accumulator-type catalytic converters are also used to attenuate oxides of nitrogen that are produced in the combustion process. This type of reactor breaks down NOx by increasing the dwell time by storing it over periods from 30 seconds to several minutes. Nitrogen oxides combine with metal oxides on the surface of the NOx accumulator to form nitrates at times that the air/fuel ratio is fuel lean to provide fuel combustion with excess oxygen.

[0030] However, such NOx storage is only short-term and when the oxides of nitrogen block the access to additional oxides of nitrogen, the "polarized" catalytic

converter must be regenerated by a process of releasing and converting the stored NOx into diatomic molecules of nitrogen and oxygen. Such regeneration requires the engine to briefly operate at a rich mixture. Illustratively, the engine must be run at a rich-fuel mixture of an air/fuel ratio of about 13.8:1 for a time sufficient to allow new arrivals of NOx to combine temporarily with metal oxides on the surfaces of the NOx accumulator.

[0031] Detecting when regeneration must occur, and then when it has been sufficiently completed, is complex and subject to false signals. One approach is to utilize a model that infers and calculates the quantity of stored nitrogen oxides on the basis of catalytic converter temperature. Another approach provides a specific NOx sensor located downstream of the accumulator catalytic converter for detection of the loss of effectiveness of the metal oxides in the accumulator assembly. Determination of sufficient regeneration is either by a model-based approach or an oxygen sensor located downstream of the catalyst bed. A change in signal from high oxygen to low oxygen may indicate the approach to the end of the regeneration operation.

[0032] In order assure that the NOx storage catalyst system works effectively from cold start or lightly loaded engine operations, an electric resistance heater is often provided to heat the exhaust gas. This creates another parasitic loss of power and increases the fuel consumption of the engine to produce the electricity, store it in a battery, and to dissipate the stored energy in a way that does not provide useful work by the engine. In addition, it is another costly maintenance item.

[0033] Another type of parasitic loss and operating expense concerns the use of a reducing agent such as dilute urea as an exhaust treatment for reducing NOx in diesel exhaust gases. In this approach, a reducing agent such as dilute urea solution is added to the exhaust in relatively small quantities. A hydrolyzing catalytic converter dissociates the urea to ammonia, which releases hydrogen to react with NOx to form nitrogen and water. This system is may be sufficiently effective for reducing NOx emissions so that leaner than normal air/fuel ratios can be used, hopefully resulting in improved fuel economy to offset some of the urea dispensing system and cost of operation. The urea tank is instrumented to alert the need to be refilled as needed to provide reduced oxides of nitrogen in the exhaust.

[0034] These and other limitations exist with respect to operating gasoline- and diesel-fueled engines.

BRIEF DESCRIPTION OF THE DRAWINGS

[0035] Figure 1 is a schematic cross-sectional side view of an injector/igniter configured in accordance with some embodiments of the disclosure.

[0036] Figure 2 is a side view of a system configured in accordance with some embodiments of the disclosure.

[0037] Figures 3A-3D illustrates several representative layered burst patterns of fuel that can be injected by the injectors configured in accordance with some embodiments of the disclosure.

[0038] Figure 4 is a block diagram illustrating a suitable system for adaptively controlling ionization in accordance with some embodiments of the disclosure.

[0039] Figure 5 is a block diagram illustrating an adaptive control system in accordance with some embodiments of the disclosure.

[0040] Figure 6 is a longitudinal section view of an adaptively controlled igniter/injector in accordance with an embodiment of the disclosure.

[0041] Figure 7 is an end view of the adaptively controlled igniter/injector of Figure 6 configured in accordance with an embodiment of the disclosure.

[0042] Figure 8 is a flow diagram illustrating a routine for combusting a fuel within a combustion chamber in accordance with some embodiments of the disclosure.

[0043] Figure 9 is a flow diagram illustrating a routine for adjusting a degree of ionization within a combustion chamber in accordance with some embodiments of the disclosure.

DETAILED DESCRIPTION

[0044] The present application incorporates by reference in their entirety the subject matter of each of the following patent applications: U.S. Patent Application No. 12/841,170, filed July 21, 2010 and titled INTEGRATED FUEL INJECTORS AND IGNITERS AND ASSOCIATED METHODS OF USE AND MANUFACTURE;

U.S. Patent Application No. 12/804,510, filed July 21, 2010 and titled FUEL INJECTOR ACTUATOR ASSEMBLIES AND ASSOCIATED METHODS OF USE AND MANUFACTURE; U.S. Patent Application No. 12/841,146, filed July 21, 2010 and titled INTEGRATED FUEL INJECTOR IGNITERS WITH CONDUCTIVE CABLE ASSEMBLIES; U.S. Patent Application No. 12/841,149, filed July 21, 2010 and titled SHAPING A FUEL CHARGE IN A COMBUSTION CHAMBER WITH MULTIPLE DRIVERS AND/OR IONIZATION CONTROL; U.S. Patent Application No. 12/841,135, filed July 21, 2010 and titled CERAMIC INSULATOR AND METHODS OF USE AND MANUFACTURE THEREOF; U.S. Patent Application No. 12/804,509, filed July 21, 2010 and titled METHOD AND SYSTEM OF THERMOCHEMICAL REGENERATION TO PROVIDE OXYGENATED FUEL, FOR EXAMPLE, WITH FUEL-COOLED FUEL INJECTORS; U.S. Patent Application No. 12/804,508, filed July 21, 2010 and titled METHODS AND SYSTEMS FOR REDUCING THE FORMATION OF OXIDES OF NITROGEN DURING COMBUSTION IN ENGINES; U.S. Patent Application No. 12/581,825, filed October 19, 2009 and titled MULTIFUEL STORAGE, METERING AND IGNITION SYSTEM; U.S. Patent Application No. 12/653,085, filed December 7, 2009 and titled INTEGRATED FUEL INJECTORS AND IGNITERS AND ASSOCIATED METHODS OF USE AND MANUFACTURE; U.S. Patent Application No. 12/006,774 (now U.S. Patent No. 7,628,137), filed January 7, 2008 and titled MULTIFUEL STORAGE, METERING AND IGNITION SYSTEM; PCT Application No. PCT/US09/67044, filed December 7, 2009 and titled INTEGRATED FUEL INJECTORS AND IGNITERS AND ASSOCIATED METHODS OF USE AND MANUFACTURE; U.S. Provisional Application No. 61/237,425, filed August 27, 2009 and titled OXYGENATED FUEL PRODUCTION; U.S. Provisional Application No. 61/237,466, filed August 27, 2009 and titled MULTIFUEL MULTIBURST; U.S. Provisional Application No. 61/237,479, filed August 27, 2009 and titled FULL SPECTRUM ENERGY; U.S. Provisional Application No. 61/304,403, filed February 13, 2010 and titled FULL SPECTRUM ENERGY AND RESOURCE INDEPENDENCE; and U.S. Provisional Application No. 61/312,100, filed March 9, 2010 and titled SYSTEM AND METHOD FOR PROVIDING HIGH VOLTAGE RF SHIELDING, FOR EXAMPLE, FOR USE WITH A FUEL INJECTOR. The present application incorporates by reference in its entirety the subject matter of the U.S. Patent Applications, filed concurrently herewith on

October 27, 2010 and titled: INTEGRATED FUEL INJECTOR IGNITERS SUITABLE FOR LARGE ENGINE APPLICATIONS AND ASSOCIATED METHODS OF USE AND MANUFACTURE (Attorney Docket No. 69545-8039US); and FUEL INJECTOR SUITABLE FOR INJECTING A PLURALITY OF DIFFERENT FUELS INTO A COMBUSTION CHAMBER (Attorney Docket No. 69545-8054US).

Overview

[0045] The present disclosure describes devices, systems, and methods for combusting a fuel within a combustion chamber. The disclosure further describes devices, systems, and methods for controlling the ionization within a combustion chamber, associated systems, assemblies, components, and methods. For example, several of the embodiments described below are directed to adaptively controlling the ionization within a combustion chamber based on various conditions within the combustion chamber and/or based on various conditions at regions at or near an igniter/injector within the combustion chamber. Certain details are set forth in the following description and in Figures 1-9 to provide a thorough understanding of various embodiments of the disclosure. However, other details describing well-known structures and systems often associated with internal combustion engines, injectors, igniters, and/or other aspects of combustion systems are not set forth below to avoid unnecessarily obscuring the description of various embodiments of the disclosure. Thus, it will be appreciated that several of the details set forth below are provided to describe the following embodiments in a manner sufficient to enable a person skilled in the relevant art to make and use the disclosed embodiments. Several of the details and advantages described below, however, may not be necessary to practice certain embodiments of the disclosure.

[0046] Many of the details, dimensions, angles, shapes, and other features shown in the Figures are merely illustrative of particular embodiments of the disclosure. Accordingly, other embodiments can have other details, dimensions, angles, and features without departing from the spirit or scope of the present disclosure. In addition, those of ordinary skill in the art will appreciate that further embodiments of the disclosure can be practiced without several of the details described below.

[0047] Reference throughout this specification to "one embodiment" or "an embodiment" means that a particular feature, structure, or characteristic described in connection with the embodiment is included in at least one embodiment of the present disclosure. Thus, the occurrences of the phrases "in one embodiment" or "in an embodiment" in various places throughout this specification are not necessarily all referring to the same embodiment. Furthermore, the particular features, structures, or characteristics may be combined in any suitable manner in one or more embodiments. The headings provided herein are for convenience only and do not interpret the scope or meaning of the claimed disclosure.

Suitable Systems and Components

[0048] Figure 1 is a schematic cross-sectional side view of an integrated injector/igniter 110 ("injector 110") configured in accordance with an embodiment of the disclosure. The injector 110 illustrated in Figure 1 is configured to inject different fuels into a combustion chamber 104, to adaptively adjust the pattern and/or frequency of the fuel injections or bursts based on combustion properties and conditions in the combustion chamber 104, and to be controlled and/or receive commands from an adaptive control system that controls the ionization within the combustion chamber 104. The injector 110 can optimize the injection of fuel for rapid ignition and complete combustion. In addition to injecting the fuel, the injector 110 includes one or more integrated ignition features that are configured to ignite the injected fuel. As such, the injector 110 can be utilized to convert conventional internal combustion engines to be able to operate on multiple choices of different fuels. Although several of the features of the illustrated injector 110 are shown schematically for purposes of illustration, several of these schematically illustrated features are described in detail below with reference to various features of embodiments of the disclosure. Accordingly, the position, size, orientation, etc. of the schematically illustrated components of the injector in Figure 1 are not intended to limit the present disclosure. Additionally, further details regarding suitable injectors may be found in U.S. Patent Application No. 12/653,085, filed December 7, 2009, entitled INTEGRATED FUEL INJECTORS AND IGNITERS AND ASSOCIATED METHODS OF USE AND MANUFACTURE, which is hereby incorporated by reference in its entirety.

[0049] In the illustrated embodiment, the injector 110 includes a body 112 having a middle portion 116 extending between a base portion 114 and a nozzle portion 118. The nozzle portion 118 extends at least partially through a port in an engine head 107 to position an end portion 119 of the nozzle portion 118 at the interface with the combustion chamber 104. The injector 110 further includes a passage or channel 123 extending through the body 112 from the base portion 114 to the nozzle portion 118. The channel 123 is configured to allow fuel to flow through the body 112. The channel 123 is also configured to allow other components, such as an actuator 122, to pass through the body 112, as well as instrumentation components and/or energy-conversion and source components of the injector 110. In certain embodiments, the actuator 122 can be a cable or rod that has a first end portion that is operatively coupled to a flow control device or valve 120 carried by the end portion 119 of the nozzle portion 118. As such, the flow valve 120 is positioned proximate to the interface with the combustion chamber 104. Although not shown in Figure 1, in certain embodiments the injector 110 can include more than one flow valve, as well as one or more check valves positioned proximate to the combustion chamber 104, as well as at other locations on the body 112.

[0050] According to another feature of the illustrated embodiment, the actuator 122 also includes a second end portion operatively coupled to a driver 124. The second end portion can further be coupled to a controller or processor 126. As explained in detail below with reference to various embodiments of the disclosure, the controller 126 and/or the driver 124 are configured to rapidly and precisely actuate the actuator 122 to inject fuel into the combustion chamber 104 via the flow valve 120. For example, in certain embodiments, the flow valve 120 can move outwardly (e.g., toward the combustion chamber 104) and in other embodiments the flow valve 120 can move inwardly (e.g., away from the combustion chamber 104) to meter and control injection of the fuel. Moreover, in certain embodiments, the driver 124 can tension the actuator 122 to retain the flow valve 120 in a closed or seated position, and the driver 124 can relax the actuator 122 to allow the flow valve 120 to inject fuel, and vice versa. The driver 124 can be responsive to the controller as well as other force inducing components (e.g., acoustic, electromagnetic and/or piezoelectric components) to achieve the desired frequency and pattern of the injected fuel bursts.

[0051] In certain embodiments, the actuator 122 can include one or more integrated sensing and/or transmitting components to detect combustion chamber properties and conditions. For example, the actuator 122 can be formed from fiber optic cables, insulated transducers integrated within a rod or cable, or can include other sensors to detect and communicate combustion chamber data. Although not shown in Figure 1, in other embodiments, and as described in detail below, the injector 110 can include other sensors or monitoring instrumentation located at various positions on the injector 110. For example, the body 112 can include optical fibers integrated into the material of the body 112, or the material of the body 112 itself can be used to communicate combustion data to one or more controllers. In addition, the flow valve 120 can be configured to sense or carry sensors in order to transmit combustion data to one or more controllers associated with the injector 110. This data can be transmitted via wireless, wired, optical or other transmission mediums. Such feedback enables extremely rapid and adaptive adjustments for optimization of fuel injection factors and characteristics including, for example, fuel delivery pressure, fuel injection initiation timing, fuel injection durations for production of multiple layered or stratified charges, the timing of one, multiple or continuous plasma ignitions or capacitive discharges, etc.

[0052] Such feedback and adaptive adjustment by the controller 126, driver 124, and/or actuator 126 also allows optimization of outcomes such as power production, fuel economy, and minimization or elimination of pollutive emissions including oxides of nitrogen. U.S. Patent Application Publication No. 2006/0238068, which is incorporated herein by reference in its entirety, describes suitable drivers for actuating ultrasonic transducers in the injector 110 and other injectors described herein.

[0053] The injector 110 can also optionally include an ignition and flow adjusting device or cover 121 (shown in broken lines in Figure 1) carried by the end portion 119 adjacent to the engine head 107. The cover 121 at least partially encloses or surrounds the flow valve 120. The cover 121 may also be configured to protect certain components of the injector 110, such as sensors or other monitoring components. The cover 121 can also act as an ignition catalyst, catalyst carrier, insulated heat retaining thermal stimulator for fuel ignition, and/or first electrode for

ignition of the injected fuels. Moreover, the cover 121 can be configured to affect the shape, pattern, and/or phase of the injected fuel. The flow valve 120 can also be configured to affect these properties of the injected fuel. For example, in certain embodiments the cover 121 and/or the flow valve 120 can be configured to create sudden gasification of the fuel flowing past these components. More specifically, the cover 121 and/or the flow valve 120 can include surfaces having sharp edges, catalysts, or other features that produce gas or vapor from the rapidly entering liquid fuel or mixture of liquid and solid fuel. The acceleration and/or frequency of the flow valve 120 actuation can also suddenly gasify the injected fuel. In operation, this sudden gasification causes the vapor or gas emitted from the nozzle portion 118 to more rapidly and completely combust. Moreover, this sudden gasification may be used in various combinations with super heating of liquid fuels and plasma or acoustical impetus of projected fuel bursts. In still further embodiments, the frequency of the flow valve 120 actuation can induce plasma projection to beneficially affect the shape and/or pattern of the injected fuel. U.S. Patent Application No. 672,636, (U.S. Patent 4,122,816) which is incorporated herein by reference in its entirety, describes suitable drivers for actuating plasma projection by injector 110 and other injectors described herein.

[0054] According to another aspect of the illustrated embodiment, and as described in detail below, at least a portion of the body 112 is made from one or more dielectric materials 117 suitable to enable the high energy ignition to combust different fuels, including unrefined fuels or low energy density fuels. These dielectric materials 117 can provide sufficient electrical insulation of the high voltage for the production, isolation, and/or delivery of spark or plasma for ignition. In certain embodiments, the body 112 can be made from a single dielectric material 117. In other embodiments, however, the body 112 can include two or more dielectric materials. For example, at least a segment of the middle portion 116 can be made from a first dielectric material having a first dielectric strength, and at least a segment of the nozzle portion 118 can be made from a dielectric material having a second dielectric strength that is greater than the first dielectric strength. With a relatively strong second dielectric strength, the second dielectric material can protect the injector 110 from thermal and mechanical shock, fouling, voltage tracking, etc.

Examples of suitable dielectric materials, as well as the locations of these materials on the body 112, are described in detail below.

[0055] In addition to the dielectric materials, the injector 110 can also be coupled to a power or high voltage source to generate the ignition event to combust the injected fuels. The first electrode can be coupled to the power source (e.g., a voltage generation and/or multiplying source such as a capacitance discharge, induction, or piezoelectric system) via one or more conductors extending through the injector 110. Regions of the nozzle portion 118, the flow valve 120, and/or the cover 121 can operate as a first electrode to generate an ignition event (e.g., spark, plasma, compression ignition operations, high energy capacitance discharge, extended induction sourced spark, and/or direct current or high frequency plasma, in conjunction with the application of ultrasound to quickly induce, impel, and complete combustion) with a corresponding second electrode of the engine head 107. As explained in detail below, the first electrode can be configured for durability and long service life. In still further embodiments of the disclosure, the injector 110 can be configured to provide energy conversion from combustion chamber sources and/or to recover waste heat or energy via thermochemical regeneration to drive one or more components of the injector 110 from the energy sourced by the combustion events.

[0056] Figure 2 is a side view illustrating the environment of a portion of an internal combustion system 200 having a fuel injector 210 configured in accordance with some embodiments of the disclosure. In the illustrated embodiment, the schematically illustrated injector 210 is merely illustrative of one type of injector that is configured to inject and ignite different fuels in a combustion chamber 202 of an internal combustion engine 204. As shown in Figure 2, the combustion chamber 202 is formed between a head portion containing injector 210 and valves, movable piston 201 and the inner surface of a cylinder 203. In other embodiments, however, the injector 210 can be used in other environments with other types of combustion chambers and/or energy transferring devices including various vanes, axial, and radial piston expanders along with numerous types of rotary combustion engines. As described in greater detail below, the injector 210 includes several features that not only allow the injection and ignition of different fuels in the combustion chamber

202, but that also enable the injector 210 to adaptively inject and ignite these different fuels according to different combustion conditions or requirements and/or adaptively modify the ionization levels within the combustion chamber 202. For example, the injector 210 includes one or more insulative materials that are configured to enable high energy ignition to combust different fuel types, including unrefined fuels or low energy density fuels. These insulative materials are also configured to withstand the harsh conditions required to combust different fuel types, including, for example, high voltage, fatigue, impact, oxidation, and corrosion degradation.

[0057] According to another aspect of the illustrated embodiment, the injector 210 can further include instrumentation for sensing various properties of the combustion processes in combustion chamber 202 (e.g., properties of the fuel penetration into air, ignition, combustion process, the combustion chamber 202, the engine 204, etc.). In response to these sensed conditions, the injector 210 can adaptively optimize the fuel injection and ignition characteristics, modify ionization levels, and so on to achieve increased fuel efficiency and power production, decrease noise, engine knock, heat losses and/or vibration to extend the engine and/or vehicle life. Moreover, the injector 210 also includes actuating components to inject the fuel into the combustion chamber 202 to achieve specific flow or spray patterns 205, as well as the phase, of the injected fuel. For example, the injector 210 can include one or more valves positioned proximate to the interface of the combustion chamber 202. The actuating components of the injector 210 provide for precise, high frequency operation of the valve to control at least the following features: the timing of fuel injection initiation and completion; the frequency and duration of repeated fuel injections; and/or the timing and selection of ignition events.

[0058] Figures 3A-3D illustrate several fuel burst patterns 305 (identified individually as first-fourth patterns 305a-305d) that can be presented by an injector configured in accordance with embodiments of the disclosure. As those of ordinary skill in the art will appreciate, the illustrated patterns 305 are merely representative of some embodiments of the present disclosure. Accordingly, the present disclosure is not limited to the patterns 305 shown in Figures 3A-3D, and in other embodiments

injectors can dispense burst patterns that differ from the illustrated patterns 305. Although the patterns 305 illustrated in Figures 3A-3D have different shapes and configurations, these patterns 305 share the feature of having sequential fuel layers 307. The individual layers 307 of the corresponding patterns 305 provide the benefit of a relatively large surface to volume ratios of the injected fuel. These large surface to volume ratios provide higher combustion rates of the fuel charges, as well as assist in insulating and accelerating complete combustion the fuel charges. Such fast and complete combustion provides several advantages over slower burning of fuel charges. For example, slower burning fuel charges require earlier ignition, cause significant heat losses to combustion chamber surfaces, and produce more backwork or output torque loss to overcome early pressure rise from the earlier ignition during the compression process of the engine cycle. Such previous combustion operations are also plagued by pollutive emissions (e.g., carbon-rich hydrocarbon particulates, oxides of nitrogen, carbon monoxide, carbon dioxide, quenched and unburned hydrocarbons, etc.) as well as harmful heating and degradation of lubricative films on the cylinder wall, piston, rings and consequent wear of pistons, rings, cylinder walls, valves, and other components of the combustion chamber.

[0059] Thus, systems and injectors according to the present disclosure provide the ability to replace conventional injectors, glow plugs, or spark plugs (e.g., diesel fuel injectors, spark plugs for gasoline, etc.) and develop full rated power with a wide variety of renewable fuels, such as hydrogen, methane, and various inexpensive fuel alcohols produced from widely available sewage, garbage, and crop and animal wastes. Although these renewable fuels may have approximately 3,000 times less energy density compared to refined fossil fuels, the systems and injectors of the present disclosure are capable of injecting and igniting these renewable fuels for efficient energy production and greatly reduced or eliminated overall production of greenhouse gases.

[0060] As discussed herein, in some embodiments an ionization control system communicates with injectors to control, modify, and/or tailor ionization levels within a combustion chamber. Figure 4 shows a system 400 for adaptively controlling ionization. The system 400 includes an adaptive control system 410 in

communication with an injector 425 or other components within a combustion chamber 420. Further details regarding the adaptive control system 410, the combustion chamber 420, and the injector 425 will now be discussed.

[0061] Systems, devices, components, and modules described herein, such as those shown in Figures 4-6, may comprise software, firmware, hardware, or any combination(s) of software, firmware, or hardware suitable for the purposes described herein. Software and other modules may reside on servers, workstations, personal computers, computerized tablets, PDAs, and other devices suitable for the purposes described herein. In other words, the software and other modules described herein may be executed by a general-purpose computer, e.g., a server computer, wireless device or personal computer. Those skilled in the relevant art will appreciate that aspects of the system can be practiced with other communications, data processing, or computer system configurations, including: Internet appliances, hand-held devices (including personal digital assistants (PDAs)), wearable computers, all manner of cellular or mobile phones, multi-processor systems, microprocessor-based or programmable consumer electronics, set-top boxes, network PCs, mini-computers, mainframe computers, and the like. Indeed, the terms “computer,” “server,” "host," "host system," and the like are generally used interchangeably herein, and refer to any of the above devices and systems, as well as any data processor. Furthermore, aspects of the system can be embodied in a special purpose computer or data processor that is specifically programmed, configured, or constructed to perform one or more of the computer-executable instructions explained in detail herein.

[0062] Software and other modules may be accessible via local memory, via a network, via a browser or other application in an ASP context, or via other means suitable for the purposes described herein. Examples of the technology can also be practiced in distributed computing environments where tasks or modules are performed by remote processing devices, which are linked through a communications network, such as a Local Area Network (LAN), Wide Area Network (WAN), or the Internet. In a distributed computing environment, program modules may be located in both local and remote memory storage devices. Data structures described herein may comprise computer files, variables, programming arrays,

programming structures, or any electronic information storage schemes or methods, or any combinations thereof, suitable for the purposes described herein. User interface elements described herein may comprise elements from graphical user interfaces, command line interfaces, and other interfaces suitable for the purposes described herein. Screenshots presented and described herein can be displayed differently as known in the art to input, access, change, manipulate, modify, alter, and work with information.

[0063] Examples of the technology may be stored or distributed on computer-readable media, including magnetically or optically readable computer discs, hard-wired or preprogrammed chips (*e.g.*, EEPROM semiconductor chips), nanotechnology memory, biological memory, or other data storage media. Indeed, computer implemented instructions, data structures, screen displays, and other data under aspects of the system may be distributed over the Internet or over other networks (including wireless networks), on a propagated signal on a propagation medium (e.g., an electromagnetic wave(s), a sound wave, etc.) over a period of time, or they may be provided on any analog or digital network (packet switched, circuit switched, or other scheme).

[0064] Figure 5 is a block diagram illustrating an adaptive control system 410 in accordance with some embodiments of the disclosure. The adaptive control system 410 includes various hardware and/or software modules configured or programmed to monitor conditions within a combustion chamber, control an injector within the combustion chamber, adjust ionization levels within the combustion chamber, and so on.

[0065] The adaptive control system 410 includes a monitoring module or component 510 that monitors conditions within a combustion chamber. For example, the monitoring module 510 may monitor a temperature within a combustion chamber during combustion, a pressure within a combustion chamber during combustion, or other conditions described herein.

[0066] The adaptive control system 410 also includes a determination module or component 520 that determines a monitored condition matches certain criteria. The determination module 520 may receive information from the monitoring module 510 regarding certain conditions within a combustion chamber and determine that the

conditions match predetermined or specified criteria associated with desirable or undesirable conditions within the combustion chamber.

[0067] In response to information received from the determination module 520, a modification module or component 530 may modify or control one or more parameters associated with a combustion event. For example, the modification module 530 may transmit control information to an injector instructing the injector to modify the application of an ionization voltage and/or current across electrodes used to combust fuel within the combustion chamber.

[0068] The adaptive control system 410 also includes a memory module or component 540 that stores information, criteria, logs, algorithms, and/or other information associated with the adaptive control of ionization levels within a combustion chamber, as well as other modules 550 or components, such as modules that communicate information to other devices on a network, modules that facilitate user interaction with the adaptive control system 410 (e.g., user interfaces, touch screens, and so on), and other components that facilitate performing the routines and methods described herein.

[0069] Figure 6 illustrates a suitable adaptively controlled igniter/injector 600, such as an injector capable of being controlled by the adaptive control system 410 to implement ionization control and modification within a combustion chamber. Figure 7 is an end view of the igniter/injector 600 of Figure 6. The injector 600 includes various components capable of measuring, monitoring, and/or detecting conditions within or near the injector 600. For example, the injector 600 includes a transparent dielectric insulator 672, that provides light pipe transmission of radiation frequencies from the combustion chamber to an optoelectronic sensor 662P, along with a varying strain signal corresponding to combustion chamber pressure conditions to a stress sensor 662D.

[0070] An embedded controller 662 receives signals from the sensors 662D and 662P for production of analog or digitized fuel-delivery and spark-ignition events as a further improvement in efficiency, power production, operational smoothness, fail-safe provisions, and longevity of engine components. The controller 662 may record sensor indications or information to determine the time between each cylinder's torque development to derive positive and negative engine acceleration as a

function of adaptive fuel-injection and spark-ignition timing, and flow data in order to determine adjustments needed for optimizing desired engine operation parameters. Accordingly, the controller 662 may act as the master computer to control various selections of operations by the injector, as well as to communicate with the adaptive control system 410 and its various modules. Of course, the injector 600 may include other components that receive control data from the adaptive control system 410.

[0071] A substantially transparent check valve 684 may protect the fiber optic bundle or cable 660 below the flow control valve 674. In some cases, the check valve 684 may be fast closing and include a ferromagnetic element encapsulated within a transparent body. Various geometries of components may assist in operation of the check valve 684, including a ferromagnetic disk within a transparent disk or a ferromagnetic ball within a transparent ball, as shown. In operation, the geometries enable the check valve 684 to be magnetically forced to the normally closed position to be very close to flow control valve 674 and the end of cable 660, as shown. When the flow control valve 674 is lifted to provide fuel flow, the check valve 684 is forced to the open position within the well bore that cages it within the intersecting slots 688 that allow fuel to flow through a magnetic valve seat 690 past the check valve 684 and through slots 688 to present a very high surface to volume penetration of fuel into the air in the combustion chamber. Accordingly, the cable 660 monitors the combustion chamber events by receiving and transmitting radiation frequencies that pass through the check valve 684. Suitable materials for the transparent portions of the check valve 684 include sapphire, quartz, high temperature polymers, ceramics, and other materials that are transparent to desired monitoring frequencies.

[0072] In some cases, it may be desirable to produce the greatest torque with the least fuel consumption. In areas such as congested city streets, where oxides of nitrogen emissions are objectionable, adaptive fuel injection and ignition timing provides maximum torque without allowing peak combustion temperatures to reach 2,200°C (4,000°F). A flame temperature detector that utilizes a small diameter fiber optic cable 660 or a larger transparent insulator 672 may be used to detect peak combustion temperatures. In such cases, the insulator 672 may be manufactured with heat and abrasion resisting coatings such as sapphire or diamond-coating on

the combustion chamber face of a high temperature polymer, or from quartz, sapphire, or glass for combined functions within the injector 600, including the light-pipe transmission of radiation produced by combustion to a sensor 662D of controller 662, as shown. Further, the controllers 662, 643, and/or 632 may monitor the signal from sensor 662D in each combustion chamber to communicate conditions to the adaptive control system 410 that can adaptively adjust the fuel-injection and/or spark-ignition timing to adapt the ionization to desired levels.

[0073] Thus, virtually any distance from the interface to the combustion chamber to a location above the tightly spaced valves and valve operators of a modern engine can be provided by fuel control forces transmitted to normally closed flow control valve 674 by insulative cable 660 along with integral spark ignition at the most optimum spark plug or diesel fuel injector location. The configuration of the fuel injector 600 allows an injector to replace the spark plug or diesel fuel injector to provide precision fuel-injection timing and adaptive spark-ignition for high efficiency stratified charge combustion of a very wide variety of fuel selections, including less expensive fuels, regardless of octane, cetane, viscosity, temperature, or fuel energy density ratings, and to provide adaptable ionization levels within a combustion chamber. Engines that were previously limited in operation to fuels with specific octane or cetane ratings are transformed to more efficient longer lived operation by the present disclosure on fuels that cost less and are far more beneficial to the environment. In addition, it is possible to operate an injector as a pilot fuel delivery and ignition system or as a spark-only ignition system to return the engine to original operation on gasoline delivered by carburetion or intake manifold fuel injection systems. Similarly, it is possible to configure injector 600 for operation with diesel fuel or alternative spark-ignited fuels according to these various fuel metering, ionization control, and other ignition combinations.

[0074] Thus, the system can adaptively control fuel-injection timing and spark-ignition timing for such purposes as maximizing fuel economy, specific power production, assuring lubricative film maintenance on combustion chamber cylinders, minimizing noise, controlling ionization levels, and so on. In some cases, the injector 600 may extend the cable 660 fixedly through the flow control valve 674 to or near the combustion chamber face of fuel distribution nozzle to view combustion

chamber events through the center of slots 688, as shown. In some cases, the cable 660 can form one or more free motion flexure extents, such as loops above armature-stop ball 635, which preferably enables armature 648 to begin movement and develop momentum before starting to lift cable 660 to thus suddenly lift flow control valve, and fixedly passes through the soft magnet core 654 to deliver radiation wavelengths from the combustion chamber to sensor 640, as shown.

[0075] In some embodiments, the sensor 640 may be separate or integrated into the controller 643 as shown. For example, an optoelectronic sensor system may comprehensively monitor combustion chamber conditions, including combustion, expansion, exhaust, intake, fuel injection and ignition events as a function of pressure and/or radiation detection in the combustion chamber of engine 630, as shown. Thus, the temperature and corresponding pressure signals from sensor 640 and/or sensor 662D and/or sensor 662P enable controller 632 to instantly or quickly correlate the temperature and time at temperature, as fuel is combusted with the combustion chamber pressure, piston position, and with the chemical nature of the products of combustion.

[0076] Such correlation is readily accomplished by operating an engine with combined data collection of piston position, combustion chamber pressure by the technology disclosed in U.S. Patents 6,015,065; 6,446,597; 6,503,584; 5,343,699; and 5,394,852; along with co-pending application 60/551,219 and combustion chamber radiation data as provided by fiber optic bundle/light pipe assembly/cable 660 to sensor 640 as shown. Correlation functions that are produced thus enable the radiation signal delivered by cable 660 to sensor 640 and piston position data to indicate the combustion chamber pressure, temperature, and pattern of combustion conditions as needed to adaptively optimize various engine functions such as maximization of fuel economy, power production, avoidance of oxides of nitrogen, avoidance of heat losses and the like. Thereafter the data provided by cable 660 and sensor 640 to controller 643 can enable rapid and adaptive control of the engine functions with a very cost effective injector.

[0077] In some embodiments, a more comprehensively adaptive injection system can incorporate both the sensor 640 and cable 660 along with one or more pressure sensors as is known in the art and/or as is disclosed in the patents and co-pending

applications included by reference herein. In some cases, the system, via one or more controllers, monitors the rotational acceleration of the engine for adaptive improvement of fuel economy and power production management. Engine acceleration accordingly may be monitored by numerous techniques including crankshaft or camshaft timing, distributor timing, gear tooth timing, piston speed detection, and so on. Engine acceleration as a function of controlled variables including fuel species selection, fuel species temperature, fuel injection timing, injection pressure, injection repetition rate, ignition timing and combustion chamber temperature mapping facilitate improvements with conventional or less-expensive fuels in engine performance, fuel economy, emissions control, engine life, and so on.

[0078] In some embodiments, a development of spark plasma ignition with adaptive timing to optimize combustion of widely varying fuel viscosities, heating values, and vapor pressures is achieved by combining the remote valve operator 648 and the flow control valve 674 to be positioned at or substantially adjacent to the combustion chamber interface. This configuration virtually eliminates harmful before or after dribble because there is little or no clearance volume between flow control valve 674 and the combustion chamber. Fuel flow impedance, ordinarily caused by channels that circuitously deliver fuel, is avoided by locating the flow control valve 674 at the combustion chamber interface. In some embodiments, the flow control valve 674 can be urged to the normally closed condition by a suitable mechanical spring or by compressive force on cable or rod 660 as a function of force applied by spring or by magnetic spring attraction to valve seat 690, including combinations of such closing actions.

[0079] In some embodiments, pressure-tolerant performance is achieved by providing free acceleration of the armature driver 648 followed by impact on the ball 635, which is fixed on cable 660 at a location that is configured to suddenly lift or displace the ball 635. In some cases, the driver 648 moves relatively freely toward the electromagnetic pole piece and past stationery cable 660, as shown. After considerable momentum has been gained, the driver 648 strikes the ball 635 within the spring well shown. The ball 635 may be attached to the cable 660 within the spring 636, as shown. Thus, in operation, the sudden application of a large or much

larger force by this impact could be developed by a direct acting solenoid valve causing the relatively smaller inertia and normally closed flow control valve 674 to suddenly lift from the upper valve seat of the passageway in seat 690.

[0080] Any suitable seat for flow control valve 674 may be utilized, however, for applications with combustion chambers of small engines, the injector may incorporate a permanent magnet within or as seat 690 to urge flow control valve 674 to the normally closed condition, as shown. Such sudden impact actuation of flow control valve 674 by armature 648 enables assured precision flow of fuel regardless of fuel temperature, viscosity, presence of slush crystals, or the applied pressure that may be necessary to assure desired fuel delivery rates. Permanent magnets such as SmCo and NdFeB readily provide the desired magnetic forces at operating temperatures up to 205°C (401°F) and assure that the flow control valve 674 is urged to the normally closed position on magnetic valve seat 690 to virtually eliminate clearance volume and after dribble.

[0081] For example, if the flow control valve 674 is incorporated with armature 648 for delivery within the bore of an insulator 664 to conductive nozzle 670, the after dribble of fuel that temporarily rested in the clearance volume shown could be as much in volume as the intended fuel delivery at the desired time in the engine cycle. Such flow of after dribble could be during the last stages of expansion or during the exhaust stroke and therefore would be mostly, if not completely, wasted, while causing flame impingement loss of protective cylinder wall lubrication, needless piston heating, and increased friction due to differential expansion, and overheating of exhaust system components. Further, conventional valve operation systems would be limited to pressure drops of about 7 atmospheres compared to more than 700 atmospheres as provided by the sudden impact of driver 648 on cable 660 and thus on flow control valve 674. Cryogenic slush fuels with prohibitively difficult textures and viscosities comparable to applesauce or cottage cheese are readily delivered through relatively large passageways to normally closed flow control valve 674, which rests upon the large diameter orifice in seat 690. Rapid acceleration, then sudden impact of large inertia electro-magnet armature 648 transfers a very large lifting force through dielectric cable 660 to suddenly and assuredly lift flow control valve 674 off the large orifice in seat 690 to open normally

closed check valve 684, if present, and jet the fuel slush mixture into the combustion chamber. The same assured delivery if provided without or with limited after dribble for fuels in any phase or mixtures of phases including hydrogen and other very low viscosity fuels at temperatures of 400°F (204°C) or higher as may be intermittently provided.

Adaptive Control of Ionization Levels in a Combustion Chamber

[0082] As described herein, in some embodiments, an injector, such as injector 100 or 600, monitors conditions within a combustion chamber, communicates monitored information to a control system, receives feedback from the control system, and adjusts operation based on the feedback. Thus, an injector receiving commands or instructions from a control system can adaptively adjust ionization levels within a combustion chamber to achieve desired levels of ionization, providing for rapid developments of sustained combustion within the combustion chamber, among other benefits. Figures 8 and 9 illustrate various routines performed by a control system instructing such injectors, such as the adaptive control system 410 or other control systems located at or remote from the injectors.

[0083] Figure 8 is a flow diagram illustrating a routine 800 for combusting a fuel within a combustion chamber. In step 810, the system monitors one or more regions at or near an injector, such as regions near electrodes or check valves, during given or specified time periods of operation of an injector. The system may utilize a monitoring module 510 in collaboration with various components of an injector that monitor conditions, such as the cable 660, the insulator 672, the sensors 662, and/or others.

[0084] Various regions may be monitored at certain time periods, such as regions located near or between electrodes, near or within check valves, and so on. Example regions of injector 600 that may be monitored include:

[0085] Regions of air in the gap between electrodes, such as a gap between electrodes 685 and 688, just before the arrival of fuel as it passes valves such as 674 and/or 684;

[0086] Regions of fuel that is controlled and metered by valve 674 to pass through the gap between electrodes, such as a gap between electrodes 685 and 688;

[0087] Regions of air and fuel in the gap between electrodes, such as a gap between electrodes 685 and 688;

[0088] Regions of air-fuel-air layers in the gap between electrodes, such as a gap between electrodes 685 and 688; and other regions.

[0089] In step 820, the system detects or determines a certain, satisfactory, and/or suitable condition at or in the monitored region. For example, the system, using various components described here, determines that a certain condition associated with a certain amount of fuel located between two electrodes has been satisfied.

[0090] In step 830, the system applies an ionization voltage to electrodes at or near the region determined to satisfy the predetermined conditions. For example, the system in response to determining that sufficient fuel is located in a gap between electrodes 685 and 688, applies a voltage across the electrodes, causing a combustion event and achieving a desired ionization level,

[0091] Thus, in some embodiments, the system employs routine 800 in order to time one or more applications of ionizing voltage to produce sufficient ionization at or near a combustion chamber interface of a region of fuel, a region of air and fuel, and/or a region of an air-fuel-air mixture.

[0092] Thus, the system can achieve sufficient and efficient ionization of these substances, causing a comparatively more rapid development of sustained combustion than can be provided by conventional engine operations. By employing routine 800, the system utilizes comparatively less energy for such ionization than required to compress the air sufficiently and pump fuel to very high pressures and to operate glow plugs when required to cause combustion after a characteristic delay.

[0093] In cases when the system operates with a diesel engine, the ionization as provided in one or more of the regions described herein is sufficient to provide substantial evaporation, molecular cracking and ionization to achieve a much more rapid sustained reaction with air in the combustion chamber. The timing of the start

of ionized air and/or fuel injection is later if not entirely after TDC (ATDC), producing comparatively more work per fuel value to increase the range and fuel efficiency of the engine, among other benefits.

[0094] In addition to adaptively controlling the application of ionization voltage to achieve certain combustion events, the system may also adaptively control ionization levels within a combustion chamber. That is, the degree of ionization may be adaptively increased or decreased to achieve a desired degree of accelerated completion of combustion of fuel that is delivered by one or more fuel injection events per power cycle of an engine. Figure 9 is a flow diagram illustrating a routine 900 for adjusting a degree of ionization within a combustion chamber.

[0095] In step 910, the system monitors one or more conditions within the combustion chamber. The system may utilize the monitoring module 510 in collaboration with various components of an injector that monitor conditions, such as the cable 660, the insulator 672, the sensors 662, and/or others. Examples of conditions that may be monitored include: the torque produced per BTU or Kcal of fuel value that is injected per each fuel injection event, the maximum temperature of combustion, the pressure produced by the combustion process, and other conditions described herein.

[0096] In step 920, the system compares the monitored conditions to desirable or ideal conditions. The system may detect or determine that one or more monitored condition satisfies a rule or threshold, or does not satisfy a rule or threshold. For example, the system may detect a maximum temperature higher than a threshold value or a pressure lower than a threshold value, and determine that a rule associated with adjusting the ionization level has been satisfied.

[0097] In step 930, the system, in response to determinations made in step 920 adjusts one or more parameters associated with a combustion event within a combustion chamber, which adjusts the degree of ionization within the combustion chamber. The system may increase or decrease the parameter. Example parameters or variables include: Compression ratio, Barometric pressure, Supercharge pressure, Temperature of air entering the combustion chamber, Temperature of the compressed air after heat losses to the piston, cylinder, and

head, Timing of start of injection, Injection pressure, Injection orientation and stratified ionization pattern, Injection duration, Injector discharge curve, and so on.

[0098] Thus, in some cases, a relatively minor amount of fuel and/or air may be ionized to trigger comparatively earlier completion of combustion than by conventional spark development in a tiny fraction of the total homogeneous mixture present, and similarly a relatively minor amount of fuel and/or air may be ionized to trigger comparatively earlier completion of diesel fuel combustion than can be accomplished by compression ignition sequences. In some cases, it may be desirable to ionize all or a majority of the fuel molecules that enter the combustion chamber to assure the most effective utilization of surplus air as an insulator of the accelerated combustion process.

[0099] In addition to the routines and methods described with respect to Figures 8 and 9, the system may accelerate the completion of combustion by utilizing certain fuel species. Table 1 shows the utilization of various fuel species, such as substances that may be derived by thermochemical regeneration of a precursor fuel to improve the heating value of ionized fuel species that are controlled by the adaptive control system 410. The table shows the precursor fuel, the new fuel species, the new fuel heat, and the advantage of reducing the energy required to ionize the new fuel species compared to the precursor fuel:

Precursor fuel	New Fuel Species	New Fuel Species	New Fuel Heat Value	+/- Req'd Ionization Energy
CH4	CO	H2	125% of CH4	- (less)
NH3	-	H2	125% of NH3	-
Gasoline	CO	H2	120% of Gasoline	-
Diesel fuel	CO	H2	120% of Diesel fuel	-
Jet fuel	CO	H2	122% of Jet Fuel	-
Urea (as fuel) (NH2)2CO	CO	H2	130% of Urea	-
CH3OH + H2O + nC	CO	H2	130 to 200% of CH3OH	-

Table 1

[00100] Particularly valuable benefits result from adaptively ionizing the substances listed in Table 1, including reduction if not elimination of the subsystems now required for operation of homogeneous charge and diesel engines. Subsystems such as those listed in Table 2 may be eliminated with great savings in the operating costs and reductions in emissions:

Exhaust System Component Eliminated	Engine Control System Eliminated
Catalytic Accumulator	Diesel Knock Detector
Urea Dissociation Reactor	Diesel Fuel Injector(s)
NOx Sensor	Gasoline Fuel Injector(s)
Electric Exhaust Heater	Urea Exhaust Injector
Recirculation Valve	Urea Storage Tank
Recirculation Pump	Glow Plugs
Recirculation Process Control	Intake Vacuum Sensor
Recirculation Pressure Sensor	Particulate Trap Pressure Sensor
Recirculation Temperature Sensor	Cat Accumulator Pressure Sensor

Table 2

Conclusion

[00101] It will be apparent that various changes and modifications can be made without departing from the scope of the disclosure. For example, the dielectric strength may be altered or varied to include alternative materials and processing means. The actuator and driver may be varied depending on fuel or the use of the injector. The cap may be used to insure the shape and integrity of the fuel distribution and the cap may vary in size, design or position to provide different functions, performance and protection. Alternatively, the injector may be varied, for example, the electrode, the optics, the actuator, various catalysts, the nozzle or the body may be made from alternative materials or may include alternative configurations than those shown and described and still be within the spirit of the disclosure.

[00102] Unless the context clearly requires otherwise, throughout the description and the claims, the words "comprise," "comprising," and the like are to be construed

in an inclusive sense as opposed to an exclusive or exhaustive sense; that is to say, in a sense of "including, but not limited to." Words using the singular or plural number also include the plural or singular number, respectively. When the claims use the word "or" in reference to a list of two or more items, that word covers all of the following interpretations of the word: any of the items in the list, all of the items in the list, and any combination of the items in the list.

[00103] The various embodiments described above can be combined to provide further embodiments. All of the U.S. patents, U.S. patent application publications, U.S. patent applications, foreign patents, foreign patent applications and non-patent publications referred to in this specification and/or listed in the Application Data Sheet are incorporated herein by reference, in their entirety. Aspects of the disclosure can be modified, if necessary, to employ fuel injectors and ignition devices with various configurations, and concepts of the various patents, applications, and publications to provide yet further embodiments of the disclosure.

[00104] These and other changes can be made to the disclosure in light of the above-detailed description. In general, in the following claims, the terms used should not be construed to limit the disclosure to the specific embodiments disclosed in the specification and the claims, but should be construed to include all systems and methods that operate in accordance with the claims. Accordingly, the invention is not limited by the disclosure, but instead its scope is to be determined broadly by the following claims.

CLAIMS

I claim:

1. A method for combusting fuel within a combustion chamber, the method comprising:

monitoring a region within a combustion chamber;

determining a certain condition at the monitored region within the combustion chamber has been satisfied; and

applying an ionization voltage across electrodes associated with the monitored region in response to determining the certain condition has been satisfied.

2. The method of claim 1, wherein determining a certain condition at the monitored region within the combustion chamber has been satisfied includes determining a certain amount of fuel is within the monitored region.

3. The method of claim 1, wherein determining a certain condition at the monitored region within the combustion chamber has been satisfied includes determining a certain ratio of fuel to air is within the monitored region.

4. The method of claim 1, wherein determining a certain condition at the monitored region within the combustion chamber has been satisfied includes determining a certain amount of air-fuel-air mixture is within the monitored region.

5. The method of claim 1, wherein determining a certain condition at the monitored region within the combustion chamber has been satisfied includes determining fuel is within the monitored region at a certain time period.

6. A method for adjusting the ionization level within a combustion chamber, the method comprising:

monitoring a condition during a combustion event within a combustion chamber;

comparing values for the monitored condition to satisfactory values for the monitored condition; and

adjusting one or more parameters associated with the combustion event within the combustion chamber.

7. The method of claim 6, wherein monitoring a condition during a combustion event within a combustion chamber includes monitoring torque produced per BTU of fuel value injected during fuel injection within the combustion event.

8. The method of claim 6, wherein monitoring a condition during a combustion event within a combustion chamber includes monitoring a maximum temperature of the combustion event.

9. The method of claim 6, wherein monitoring a condition during a combustion event within a combustion chamber includes monitoring pressure produced during the combustion event.

10. The method of claim 6, wherein adjusting one or more parameters associated with the combustion event within the combustion chamber increases an ionization level within the combustion chamber.

11. The method of claim 6, wherein adjusting one or more parameters associated with the combustion event within the combustion chamber decreases an ionization level within the combustion chamber.

12. The method of claim 6, wherein adjusting one or more parameters associated with the combustion event within the combustion chamber includes adjusting a pressure within the combustion chamber.

13. The method of claim 6, wherein adjusting one or more parameters associated with the combustion event within the combustion chamber includes adjusting a temperature of air within the combustion chamber.

14. The method of claim 6, wherein adjusting one or more parameters associated with the combustion event within the combustion chamber includes adjusting a start time for injecting fuel into the combustion chamber.

15. The method of claim 6, wherein adjusting one or more parameters associated with the combustion event within the combustion chamber includes adjusting a pressure of injection of fuel into the combustion chamber.

16. The method of claim 6, wherein adjusting one or more parameters associated with the combustion event within the combustion chamber includes adjusting a stratified ionization pattern within the combustion chamber.

17. The method of claim 6, wherein adjusting one or more parameters associated with the combustion event within the combustion chamber includes adjusting a duration for injecting fuel into the combustion chamber.

18. A system for adjusting parameters associated with a combustion event, the system comprising:

a monitoring module, wherein the monitoring module is configured to monitor conditions within a combustion chamber;

a determination module, wherein the determination module is configured to determine one or more monitored conditions satisfies a rule associated with adjusting parameters associated with the combustion chamber; and

a control module, wherein the control module is configured to adjust one or more parameters in response to the determination that one or more monitored conditions satisfies the rule.

19. The system of claim 18, wherein the monitoring module is a component of a fuel injector within the combustion chamber; and

wherein the control module transmits instructions to the fuel injector to cause the fuel injector to adjust operation of injecting fuel into the combustion chamber.

20. The system of claim 18, wherein the monitoring module is a component of a fuel injector within the combustion chamber; and

wherein the control module transmits instructions to the fuel injector to cause the fuel injector to adjust an ionization voltage applies to a fuel ignition gap between electrodes of the fuel injector.

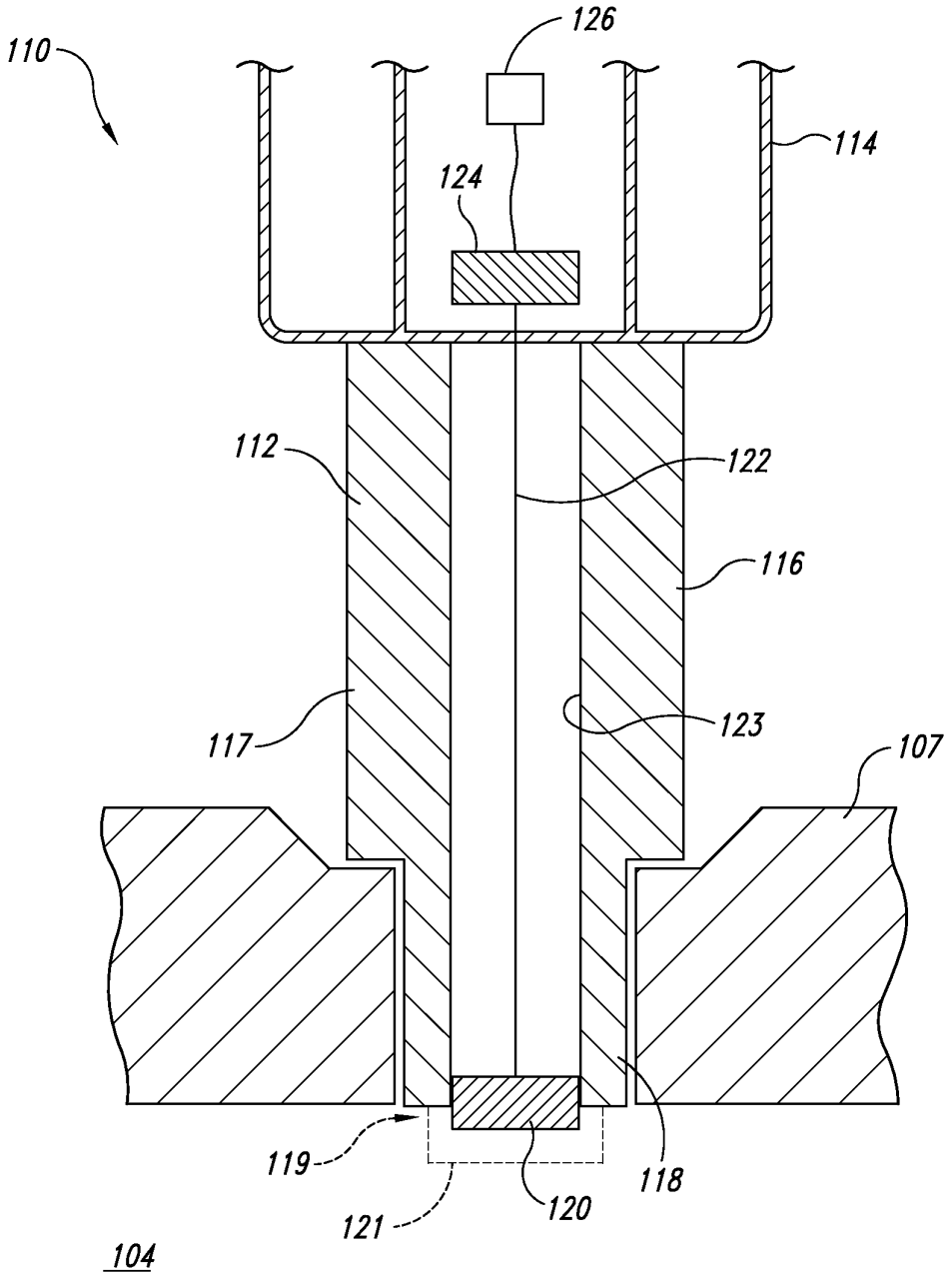

Fig. 1

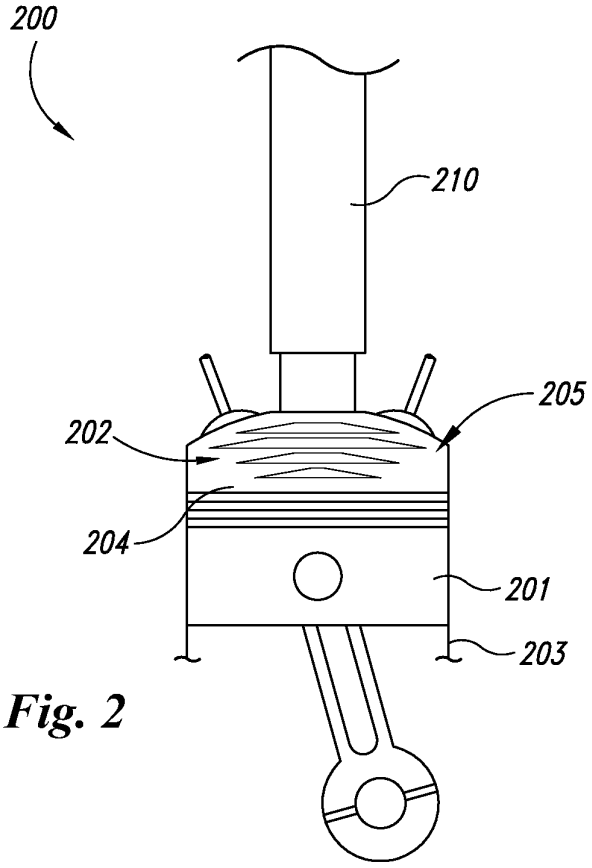

Fig. 2

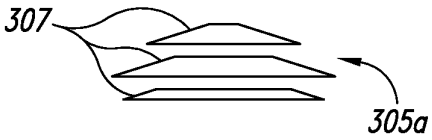

Fig. 3A

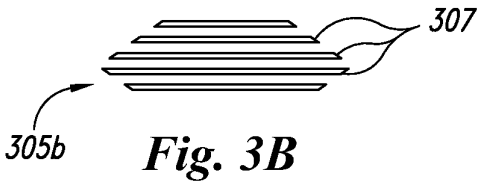

Fig. 3B

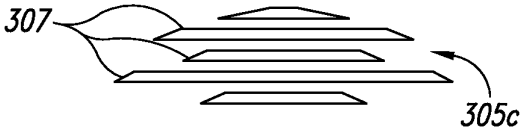

Fig. 3C

Fig. 3D

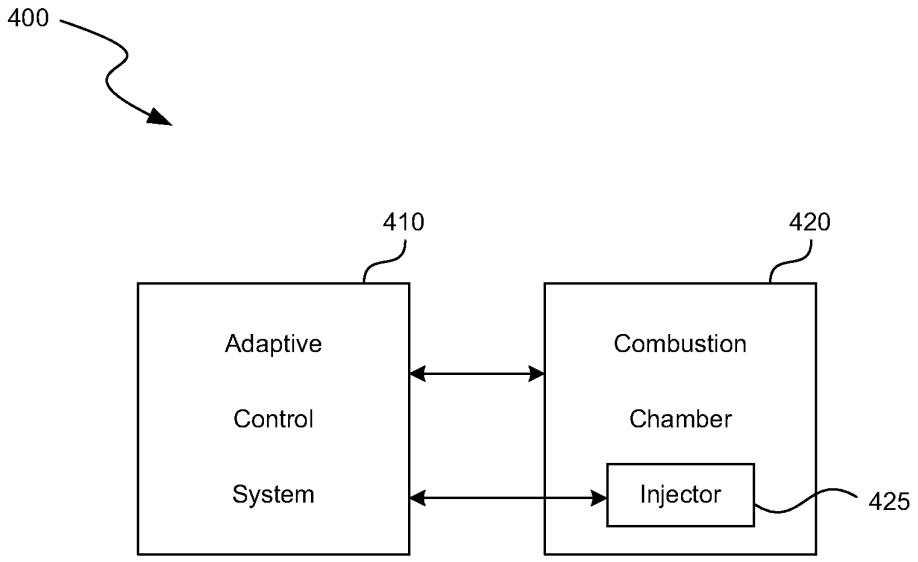
400
410
420
Adaptive
Control
System
Combustion
Chamber
Injector
425

Fig. 4

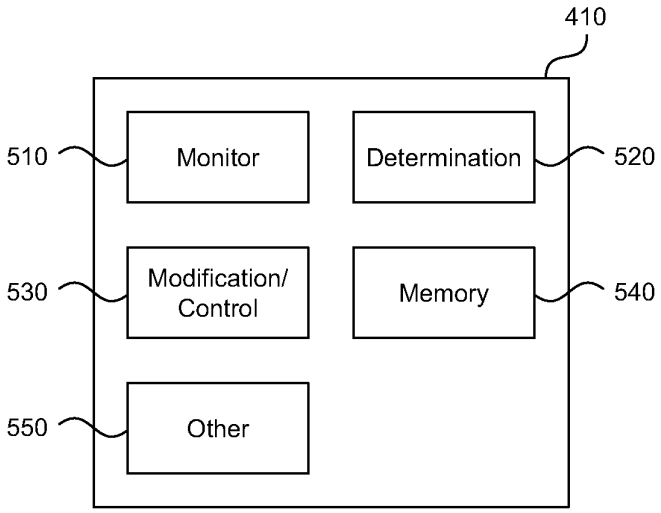
410
510
Monitor
Determination
520
530
Modification/
Control
Memory
540
550
Other

Fig. 5

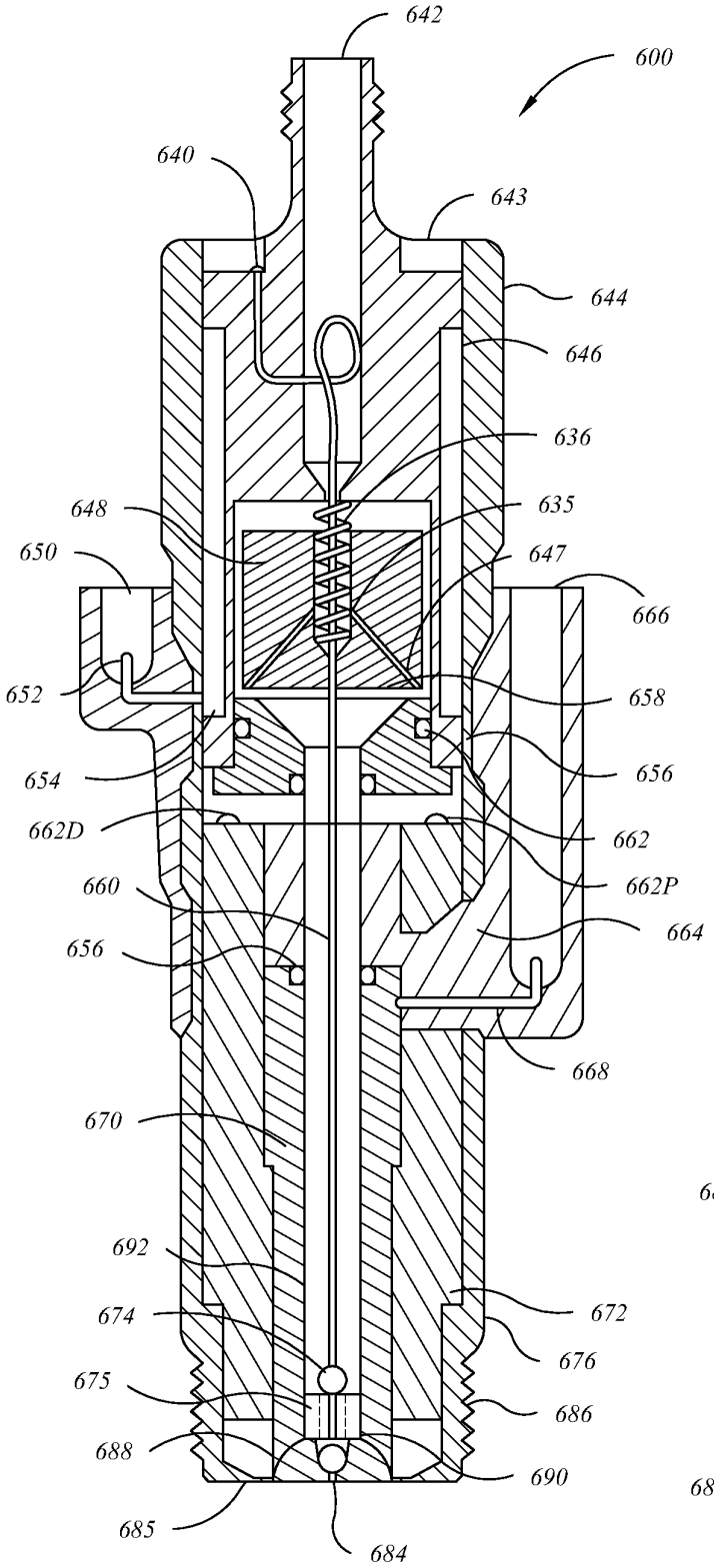
642
600
640
643
644
646
636
648
635
650
647
666
652
658
654
656
662D
662
660
662P
664
656
668
670
692
672
674
676
675
686
688
690
685
684

Fig. 6

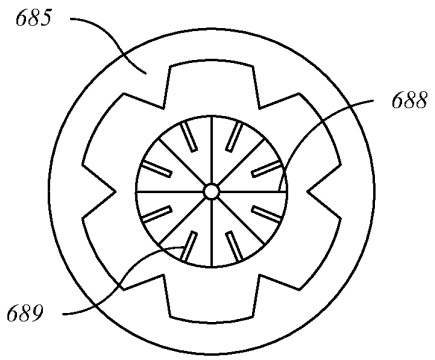
685
688
689

Fig. 7

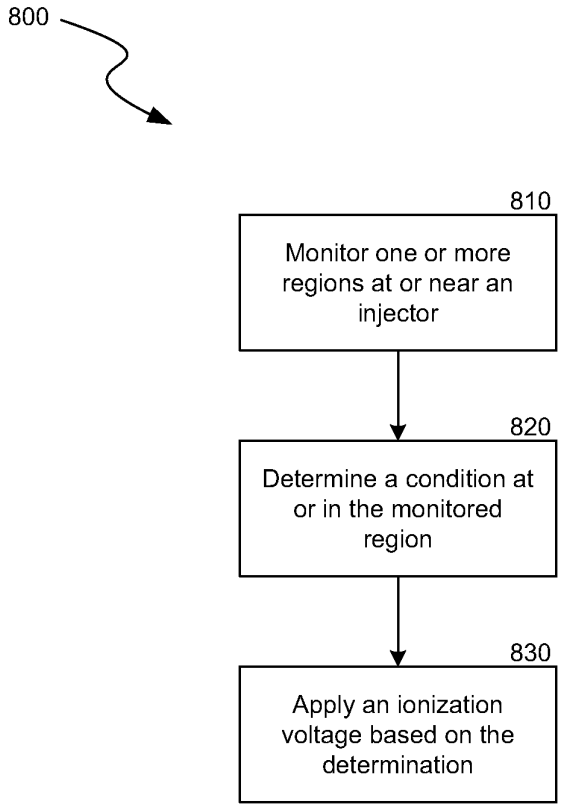
800
810
Monitor one or more regions at or near an injector
820
Determine a condition at or in the monitored region
830
Apply an ionization voltage based on the determination

Fig. 8

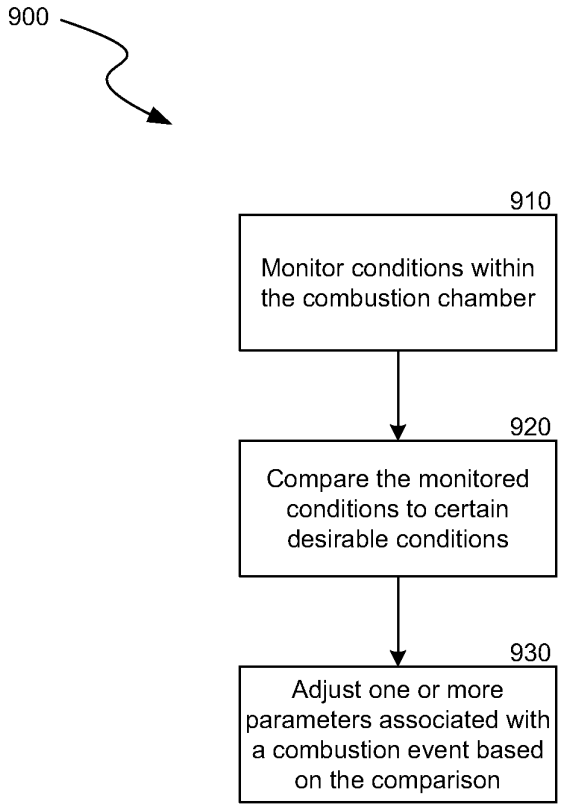
900
910
Monitor conditions within the combustion chamber
920
Compare the monitored conditions to certain desirable conditions
930
Adjust one or more parameters associated with a combustion event based on the comparison

Fig. 9

PCT/US2010/054364

PATENT COOPERATION TREATY

69545-8314.WO00
CBP/NK

From the INTERNATIONAL SEARCHING AUTHORITY

To:

BETCHER SUSAN D.

PERKINS COIE LLP P.O. BOX 1247 SEATTLE WA 98111-1247 USA

RECEIVED
PATENT DOCKETING
AUG 29 2011
PERKINS COIE LLP

PCT

NOTIFICATION OF TRANSMITTAL OF THE INTERNATIONAL SEARCH REPORT AND THE WRITTEN OPINION OF THE INTERNATIONAL SEARCHING AUTHORITY, OR THE DECLARATION

(PCT Rule 44.1)

Date of mailing *(day/month/year)* 22 AUGUST 2011 (22.08.2011)

Applicant's or agent's file reference 69545-8059.WO00

DOCKETED TO CPI
10-22-11
11-22-11
☒ Deadline
☐ Follow
☐ Previously
☐ Abandoned
☐ Transferred
☐ Dedocketed
SB

FOR FURTHER ACTION See paragraphs 1 and 4 below

International application No. **PCT/US2010/054364**

International filing date *(day/month/year)* **27 OCTOBER 2010 (27.10.2010)**

Applicant **MCALISTER ROY E.**

1. ☒ The applicant is hereby notified that the international search report and the written opinion of the International Searching Authority have been established and are transmitted herewith.

Filing of amendments and statement under Article 19:

The applicant is entitled, if he so wishes, to amend the claims of the international application (see Rule 46):

When? The time limit for filing such amendments is normally two months from the date of transmittal of the international search report.

Where? Directly to the International Bureau of WIPO, 34 chemin des Colombettes 1211 Geneva 20, Switzerland, Facsimile No.: +41 22 338 82 70

For more detailed instructions, see *PCT Applicant's Guide*, International Phase, paragraphs 9.004 - 9.011.

2. ☐ The applicant is hereby notified that no international search report will be established and that the declaration under Article 17(2)(a) to that effect and the written opinion of the International Searching Authority are transmitted herewith.

3. ☐ **With regard to any protest** against payment of (an) additional fee(s) under Rule 40.2, the applicant is notified that:

☐ the protest together with the decision thereon has been transmitted to the International Bureau together with any request to forward the texts of both the protest and the decision thereon to the designated Offices.

☐ no decision has been made yet on the protest; the applicant will be notified as soon as a decision is made.

4. **Reminders**

The applicant may submit comments on an informal basis on the written opinion of the International Searching Authority to the International Bureau. The International Bureau will send a copy of such comments to all designated Offices unless an international preliminary examination report has been or is to be established. Following the expiration of 30 months from the priority date, these comments will also be made available to the public.

Shortly after the expiration of **18 months** from the priority date, the international application will be published by the International Bureau. If the applicant wishes to avoid or postpone publication, a notice of withdrawal of the international application, or of the priority claim, must reach the International Bureau before the completion of the technical preparations for international publication (Rules 90bis.1 and 90bis.3).

Within **19 months** from the priority date, but only in respect of some designated Offices, a demand for international preliminary examination must be filed if the applicant wishes to postpone the entry into the national phase **until 30 months** from the priority date (in some Offices even later); otherwise, the applicant must, **within 20 months** from the priority date, perform the prescribed acts for entry into the national phase before those designated Offices.

In respect of other designated Offices, the time limit of **30 months** (or later) will apply even if no demand is filed within 19months.

For details about the applicable time limits, Office by Office, see www.wipo.int/pct/en/texts/time_limits.html and the PCT Applicant's Guide, National Chapters.

Name and mailing address of the ISA/KR

Korean Intellectual Property Office
Government Complex-Daejeon, 189 Cheongsa-ro, Seo-gu, Daejeon 302-701, Republic of Korea

Facsimile No. 82-42-472-7140

Authorized officer

COMMISSIONER

Telephone No. 82-42-481-8752

* Attention

Copies of the documents cited in the international search report can be searched in the following Korean Intellectual Property Office English website for three months from the date of mailing of the international search report.

http://www.kipo.go.kr/en/ => PCT Services => PCT Services

ID : PCT international application number
PW : **GZYPF63N**

Inquiries related to PCT International Search Report or Written Opinion prepared by KIPO as an International Searching Authority can be answered not only by KIPO but also through IPKC (Intellectual Property Korea Center), located in Vienna, VA, which functions as a PCT Help Desk for PCT applicants.

Homepage: http://www.ipkcenter.com
Email: ipkc@ipkcenter.com
Phone: +1 703 388 1066
Fax: +1 703 388 1084

PATENT COOPERATION TREATY

PCT

INTERNATIONAL SEARCH REPORT

(PCT Article 18 and Rules 43 and 44)

Applicant's or agent's file reference 69545-8059.WO00	FOR FURTHER ACTION	see Form PCT/ISA/220 as well as, where applicable, item 5 below.
International application No. **PCT/US2010/054364**	International filing date *(day/month/year)* **27 OCTOBER 2010 (27.10.2010)**	(Earliest) Priority Date *(day/month/year)* 07 DECEMBER 2009 (07.12.2009)
Applicant **MCALISTER ROY E.**		

This International search report has been prepared by this International Searching Authority and is transmitted to the applicant according to Article 18. A copy is being transmitted to the International Bureau.

This international search report consists of a total of 3 sheets.

☒ It is also accompanied by a copy of each prior art document cited in this report.

1. **Basis of the report**
   a. With regard to the **language**, the international search was carried out on the basis of:
      ☒ the international application in the language in which it was filed
      ☐ a translation of the international application into _____, which is the language of a translation furnished for the purposes of international search (Rules 12.3(a) and 23.1(b))
   b. ☐ This international search report has been established taking into account the **rectification of an obvious mistake** authorized by or notified to this Authority under Rule 91 (Rule 43.6*bis*(a)).
   c. ☐ With regard to any **nucleotide and/or amino acid sequence** disclosed in the international application, see Box No. I.
2. ☐ **Certain claims were found unsearchable** (See Box No. II)
3. ☐ **Unity of invention is lacking** (See Box No. III)
4. With regard to the **title**,
   ☒ the text is approved as submitted by the applicant.
   ☐ the text has been established by this Authority to read as follows:
5. With regard to the **abstract**,
   ☒ the text is approved as submitted by the applicant.
   ☐ the text has been established, according to Rule 38.2, by this Authority as it appears in Box No. IV. The applicant may, within one month from the date of mailing of this international search report, submit comments to this Authority.
6. With regard to the **drawings**,
   a. the figure of the **drawings** to be published with the abstract is Figure No. 8
      ☒ as suggested by the applicant.
      ☐ as selected by this Authority, because the applicant failed to suggest a figure.
      ☐ as selected by this Authority, because this figure better characterizes the invention.
   b. ☐ none of the figure is to be published with the abstract.

INTERNATIONAL SEARCH REPORT

International application No.
PCT/US2010/054364

A. CLASSIFICATION OF SUBJECT MATTER

F02D 41/20(2006.01)i, F02D 41/04(2006.01)i, F02D 41/14(2006.01)i, F02M 51/02(2006.01)i

According to International Patent Classification (IPC) or to both national classification and IPC

B. FIELDS SEARCHED

Minimum documentation searched (classification system followed by classification symbols)
F02D 41/20; F02D 41/14; F02D 41/00; F02P 17/00; F02D 23/00

Documentation searched other than minimum documentation to the extent that such documents are included in the fields searched
Korean utility models and applications for utility models
Japanese utility models and applications for utility models

Electronic data base consulted during the international search (name of data base and, where practicable, search terms used)
eKOMPASS(KIPO internal) & Keywords: combustion chamber, monitor, ionization, fuel and air

C. DOCUMENTS CONSIDERED TO BE RELEVANT

Category*	Citation of document, with indication, where appropriate, of the relevant passages	Relevant to claim No.
A	US 05036669A A (EARLESON; WALTER E. et al.) 06 August 1991 See the abstract, figs.2-3 and claims.	1-20
A	EP 0671555 A1 (NGK SPARK PLUG CO., LTD) 13 September 1995 See the abstract figs. 1-3 and claims.	1-20
A	US 06029627A A (VANDYNE; EDWARD) 29 February 2000 See the abstract fig.2 and claims.	1-20
A	US 6483311 B1 (KETTERER; MARKUS et al.) 19 November 2002 See the abstract figs. 1,6 and claims.	1-20

☐ Further documents are listed in the continuation of Box C. ☒ See patent family annex.

* Special categories of cited documents:
"A" document defining the general state of the art which is not considered to be of particular relevance
"E" earlier application or patent but published on or after the international filing date
"L" document which may throw doubts on priority claim(s) or which is cited to establish the publication date of citation or other special reason (as specified)
"O" document referring to an oral disclosure, use, exhibition or other means
"P" document published prior to the international filing date but later than the priority date claimed
"T" later document published after the international filing date or priority date and not in conflict with the application but cited to understand the principle or theory underlying the invention
"X" document of particular relevance; the claimed invention cannot be considered novel or cannot be considered to involve an inventive step when the document is taken alone
"Y" document of particular relevance; the claimed invention cannot be considered to involve an inventive step when the document is combined with one or more other such documents,such combination being obvious to a person skilled in the art
"&" document member of the same patent family

Date of the actual completion of the international search	Date of mailing of the international search report
19 AUGUST 2011 (19.08.2011)	**22 AUGUST 2011 (22.08.2011)**
Name and mailing address of the ISA/KR Korean Intellectual Property Office Government Complex-Daejeon, 189 Cheongsa-ro, Seo-gu, Daejeon 302-701, Republic of Korea Facsimile No. 82-42-472-7140	Authorized officer CHOI, INYONG Telephone No. 82-42-481-5475

Form PCT/ISA/210 (second sheet) (July 2009)

INTERNATIONAL SEARCH REPORT

Information on patent family members

International application No.
PCT/US2010/054364

Patent document cited in search report	Publication date	Patent family member(s)	Publication date
US 05036669A A	06.08.1991	EP 0461156 A1	18.12.1991
		EP 0461156 B1	11.10.1995
		JP 02-895620 B2	05.03.1999
		JP 4504890 T	27.08.1992
		US 05036669A A	06.08.1991
		WO 91-10064 A1	11.07.1991
EP 0671555 A1	13.09.1995	EP 0555831 A1	18.08.1993
		EP 0555831 B1	08.05.1996
		JP 06-229969 A	19.08.1994
		US 05247910A A	28.09.1993
US 06029627A A	29.02.2000	CA 2281621 A1	27.08.1998
		CA 2281621 C	22.04.2003
		EP 0966599 A1	29.12.1999
		EP 0966599 B1	03.12.2003
		JP 04-246798 B2	02.04.2009
		JP 2002-514284 A	14.05.2002
		KR 10-2000-0075508 A	15.12.2000
		WO 98-37322 A1	27.08.1998
US 6483311 B1	19.11.2002	DE 19915088 A1	05.10.2000
		EP 1084387 A1	21.03.2001
		JP 2002-541379 A	03.12.2002
		JP 2002-541379 T	03.12.2002
		WO 00-60327 A1	12.10.2000

PATENT COOPERATION TREATY

From the
INTERNATIONAL SEARCHING AUTHORITY

To:
BETCHER SUSAN D.

PERKINS COIE LLP P.O. BOX 1247 SEATTLE WA 98111-1247 USA

PCT

WRITTEN OPINION OF THE INTERNATIONAL SEARCHING AUTHORITY

(PCT Rule 43bis.1)

Date of mailing *(day/month/year)*	**22 AUGUST 2011 (22.08.2011)**
Applicant's or agent's file reference 69545-8059.WO00	**FOR FURTHER ACTION** See paragraph 2 below

International application No.	International filing date *(day/month/year)*	Priority date *(day/month/year)*
PCT/US2010/054364	**27 OCTOBER 2010 (27.10.2010)**	07 DECEMBER 2009 (07.12.2009)

International Patent Classification (IPC) or both national classification and IPC

F02D 41/20(2006.01)i, F02D 41/04(2006.01)i, F02D 41/14(2006.01)i, F02M 51/02(2006.01)i

Applicant

MCALISTER ROY E.

1. This opinion contains indications relating to the following items:

- [x] Box No. I Basis of the opinion
- [ ] Box No. II Priority
- [ ] Box No. III Non-establishment of opinion with regard to novelty, inventive step and industrial applicability
- [ ] Box No. IV Lack of unity of invention
- [x] Box No. V Reasoned statement under Rule 43bis.1(a)(i) with regard to novelty, inventive step or industrial applicability; citations and explanations supporting such statement
- [ ] Box No. VI Certain documents cited
- [ ] Box No. VII Certain defects in the international application
- [ ] Box No. VIII Certain observations on the international application

2. **FURTHER ACTION**

If a demand for international preliminary examination is made, this opinion will be considered to be a written opinion of the International Preliminary Examining Authority ("IPEA") except that this does not apply where the applicant chooses an Authority other than this one to be the IPEA and the chosen IPEA has notified the International Bureau under Rule 66.1bis(b) that written opinions of this International Searching Authority will not be so considered.

If this opinion is, as provided above, considered to be a written opinion of the IPEA, the applicant is invited to submit to the IPEA a written reply together, where appropriate, with amendments, before the expiration of 3 months from the date of mailing of Form PCT/ISA/220 or before the expiration of 22 months from the priority date, whichever expires later.
For further options, see Form PCT/ISA/220.

Name and mailing address of the ISA/KR	Date of completion of this opinion	Authorized officer
Korean Intellectual Property Office Government Complex-Daejeon, 189 Cheongsa-ro, Seo-gu, Daejeon 302-701, Republic of Korea Facsimile No. 82-42-472-7140	19 AUGUST 2011 (19.08.2011)	CHOI, INYONG Telephone No.82-42-481-5475

WRITTEN OPINION OF THE INTERNATIONAL SEARCHING AUTHORITY

International application No.
PCT/US2010/054364

Box No. I Basis of this opinion

1. With regard to the **language**, this opinion has been established on the basis of:

   ☒ the international application in the language in which it was filed

   ☐ a translation of the international application into _____, which is the language of a translation furnished for the purposes of international search (Rules 12.3(a) and 23.1(b))

2. ☐ This opinion has been established taking into account the **rectification of an obvious mistake** authorized by or notified to this Authority under Rule 91 (Rule 43*bis*.1(a))

3. With regard to any **nucleotide and/or amino acid sequence** disclosed in the international application, this opinion has been established on the basis of:

   a. a sequence listing filed or furnished
   ☐ on paper
   ☐ in electronic form

   b. time of filing or furnishing
   ☐ contained in the international application as filed.
   ☐ filed together with the international application in electronic form.
   ☐ furnished subsequently to this Authority for the purposes of search.

4. ☐ In addition, in the case that more than one version or copy of a sequence listing has been filed or furnished, the required statements that the information in the subsequent or additioanl copies is identical to that in the application as filed or does not go beyond the application as filed, as appropriate, were furnished.

5. Additional comments:

WRITTEN OPINION OF THE INTERNATIONAL SEARCHING AUTHORITY

International application No.
PCT/US2010/054364

Box No. V Reasoned statement under Rule 43bis.1(a)(i) with regard to novelty, inventive step or industrial applicability; citations and explanations supporting such statement

1. Statement

Novelty (N)	Claims	1-20	YES
	Claims	NONE	NO
Inventive step (IS)	Claims	1-20	YES
	Claims	NONE	NO
Industrial applicability (IA)	Claims	1-20	YES
	Claims	NONE	NO

2. Citations and explanations :

Reference is made to the following documents:

D1: US 05036669A A (EARLESON; WALTER E. et al.) 06 August 1991
D2: EP 0671555 A1 (NGK SPARK PLUG CO., LTD) 13 September 1995
D3: US 06029627A A (VANDYNE; EDWARD) 29 February 2000
D4: US 6483311 B1 (KETTERER; MARKUS et al.) 19 November 2002

(1) Novelty and Inventive Step

Claim 1 satisfies the criteria set out in PCT Article 33(2)-(3), because the prior art documents including D1-D4 do not disclose or suggest the method for combustion fuel within a combustion chamber comprising, monitoring a region within a combustion chamber and applying an ionization voltage associated with the monitored region.

Claim 6 satisfies the criteria set out in PCT Article 33(2)-(3), because the prior art documents including D1-D4 do not disclose or suggest the method for adjusting the ionization level within a combustion chamber comprising, monitoring a condition within a combustion chamber and adjusting one or more parameters associated with the combustion.

Claim 18 satisfies the criteria set out in PCT Article 33(2)-(3), because the prior art documents including D1-D4 do not disclose or suggest the system for adjusting parameters associated with a combustion event comprising, a monitoring module, a determination module and a control module.

Claims 2-5, 7-17 and 19-20 are dependent on claims 1, 6 and 18 respectively. Consequently, 2-5, 7-17 and 19-20 are also considered to be novel and to involve an inventive step under PCT Article 33(2) and (3).

(2) Industrial Applicability

Claims 1-20 meet the requirements of PCT Article 33(4) because the claimed inventions can be made or used in the engine apparatus industry.

UNITED STATES PATENT AND TRADEMARK OFFICE

Commissioner for Patents
United States Patent and Trademark Office
P.O. Box 1450

MAILED
FEB 23 2012
OFFICE OF PETITIONS

PERKINS COIE LLP
PATENT-SEA
P.O. BOX 1247
SEATTLE WA 98111-1247

In re Application of
Roy E. MCALISTER
Application No. 12/913,749
Filed: October 27, 2010
Atty. Docket No.: 69545-8314.US00
For: ADAPTIVE CONTROL SYSTEM FOR FUEL INJECTORS AND IGNITERS

: DECISION ON REQUEST TO
: PARTICIPATE IN PCT-PPH PROGRAM
: AND PETITION TO MAKE SPECIAL
: UNDER 37 CFR 1.102(a)

This is a decision on the request to participate in the PCT Patent Prosecution Highway (PCT-PPH) program and the petition under 37 CFR 1.102(a), filed January 23, 2012, to make the above-identified application special.

The request and petition are **DISMISSED**.

A grantable request to participate in the PCT –PPH program and petition to make special under 37 CFR 1.102(a) require:

(1) the U.S. application must have an eligible relationship to one or more PCT application where the ISA or IPEA are the JPO, EPO, KIPO, IPAU, Russia, Spain, Finland, Austria, or USPTO;

(2) at least one claim in the PCT application has novelty, inventive step, and industrial applicability and must be free of any observations in Box VIII in the latest work product in the international stage or applicant must identify and explain why the claim(s) is/are not subject to the observation in Box VIII;

(3) applicant must submit a copy of the claim(s) from the PCT application(s) that have novelty, inventive step, and industrial applicability along with an English translation thereof and a statement that the English translation is accurate, if the claims are not in the English language;

(4) all the claims in the U.S. application must sufficiently correspond or be amended to sufficiently correspond to the claim(s) that have novelty, inventive step, and industrial applicability in the PCT application(s);

(5) examination of the U.S. application has not begun;

(6) applicant must submit a copy of the latest international work product from the PCT application indicating that the claim(s) have novelty, inventive step, and industrial applicability along with an English translation thereof;

(7) applicant must submit an IDS listing the documents cited by the PCT examiner in the international work product along with copies of documents except U.S. patents or U.S. patent application publications; and

(8) applicant is required to submit a claims correspondence table in English which indicates how all the claims in the U.S. application correspond to the claims indicated as having novelty, inventive step, and industrial applicability in the latest international work product.

Requirements (2) to (8) above are considered to have been met. However, the request to participate in the PPH program and petition fail to meet requirement (1).

Regarding requirement (1), the U.S. application file fails to show an eligible relationship to the PCT/US 10/54364 as listed on the request form.

Applicant is given **ONE** opportunity with a time period of **ONE MONTH** or **THIRTY DAYS**, whichever is longer, from the mailing date of this decision to correct the deficiencies. **NO EXTENSION OF TIME UNDER 37 CFR 1.136 IS PERMITTED**. If the deficiencies are not corrected within the time period given, the application will await action in its regular turn.

Response must be filed via the Electronic Filing System (EFS) using the document description: Petition to make special under Patent Pros. Hwy. Any preliminary amendments and IDS submitted with the PPH documents must be separately indexed as a preliminary amendment and IDS, respectively.

Telephone inquiries concerning this decision should be directed to Robert DeWitty, Petition Attorney, Office of Petitions at 571-272-8427.

All other inquiries concerning the examination or status of the application is accessible in the PAIR system at http://www.uspto.gov/ebc/index.html.

David Bucci
Petitions Examiner
Office of Petitions

Docket No.: 695458314US
(PATENT)

IN THE UNITED STATES PATENT AND TRADEMARK OFFICE

In re Patent Application of:
Roy E. McAlister, P.E.

Application No.: 12/913,749 | Confirmation No.: 4512

Filed: October 27, 2010 | Art Unit: 3747

For: ADAPTIVE CONTROL SYSTEM FOR FUEL INJECTORS AND IGNITERS | Examiner: A. L. Bacon

RENEWED REQUEST TO PARTICIPATE IN PCT-PPH PROGRAM AND RENEWED PETITION TO MAKE SPECIAL UNDER 37 CFR 1.102(a)

MS Petition
Commissioner for Patents
P.O. Box 1450
Alexandria, VA 22313-1450

Madam:

On January 23, 2012, applicant filed a Request to Participate in PCT-PPH Program and Petition to Make Special under 37 CFR 1.102(a). In the Decision mailed February 23, 2012, said petition was denied for allegedly failing to meet the following requirement:

(1) the U.S. application must have an eligible relationship to one or more PCT application where ISA or IPEA are the JPO, EPO, KIPO, IPAU, Russia, Spain, Finland, Austria, or USPTO.

More specifically, the Decision stated that "the U.S. application file fails to show an eligible relationship to the PCT/US10/54364 as listed on the request form."

Applicant notes that both the present application and PCT/US10/54364 claim priority to U.S. Provisional Patent Application No. 61/304,403, filed February 13, 2010. This is an eligible relationship. More specifically, the U.S. application claims domestic benefit to a U.S. provisional application which forms the basis for the priority claim in the corresponding PCT Application.

This relationship is identified as relationship type (6) in the Request for Participation form (PTO/SB/20PCT-KR) and is identified in diagram E2 of the Official Gazette of the United States Patent and Trademark Office (June 29, 2010, Vol. 1355, No. 5) http://uspto.gov/web/offices/com/sol/og/2010/week26/TOC.htm#ref12.

The filing receipt for the present application and the cover page of the PCT Publication are enclosed for reference. Applicant also notes that there are additional relationships between these two applications that would also qualify the application to participate in the PCT-PPH program.

Applicant respectfully requests reconsideration of the petition.

Applicant believes no fee is due with this response. However, if a fee is due, please charge our Deposit Account No. 50-0665, under Order No. 695458314US from which the undersigned is authorized to draw.

Dated: 3.22.12

Respectfully submitted,

By

Susan D. Betcher
Registration No.: 43,498
PERKINS COIE LLP
P.O. Box 1247
Seattle, Washington 98111-1247
(206) 359-8000
(206) 359-7198 (Fax)
Attorney for Applicant

APPENDIX 1

FILING RECEIPT FOR PRESENT APPLICATION

UNITED STATES PATENT AND TRADEMARK OFFICE

UNITED STATES DEPARTMENT OF COMMERCE
United States Patent and Trademark Office
Address: COMMISSIONER FOR PATENTS
PO Box 1450
Alexandria, Virginia 22313-1450
www.uspto.gov

APPLICATION NUMBER	FILING or 371(c) DATE	GRP ART UNIT	FIL FEE REC'D	ATTY.DOCKET.NO	TOT CLAIMS	IND CLAIMS
12/913,749	10/27/2010	3747	527	69545-8314.US00	20	3

CONFIRMATION NO. 4512

UPDATED FILING RECEIPT

OC000000046580354

25096
PERKINS COIE LLP
PATENT-SEA
P.O. BOX 1247
SEATTLE, WA 98111-1247

Date Mailed: 03/18/2011

Receipt is acknowledged of this non-provisional patent application. The application will be taken up for examination in due course. Applicant will be notified as to the results of the examination. Any correspondence concerning the application must include the following identification information: the U.S. APPLICATION NUMBER, FILING DATE, NAME OF APPLICANT, and TITLE OF INVENTION. Fees transmitted by check or draft are subject to collection. Please verify the accuracy of the data presented on this receipt. **If an error is noted on this Filing Receipt, please submit a written request for a Filing Receipt Correction. Please provide a copy of this Filing Receipt with the changes noted thereon. If you received a "Notice to File Missing Parts" for this application, please submit any corrections to this Filing Receipt with your reply to the Notice. When the USPTO processes the reply to the Notice, the USPTO will generate another Filing Receipt incorporating the requested corrections**

Applicant(s)

Roy E. McAlister, Phoenix, AZ;

Assignment For Published Patent Application

McAlister Technologies, LLC, Phoenix, AZ

Power of Attorney: None

Domestic Priority data as claimed by applicant

This appln claims benefit of 61/304,403 02/13/2010
and claims benefit of 61/312,100 03/09/2010
and is a CIP of 12/841,170 07/21/2010
and is a CIP of 12/804,510 07/21/2010
and is a CIP of 12/841,146 07/21/2010
and is a CIP of 12/841,149 07/21/2010
and is a CIP of 12/841,135 07/21/2010
and is a CIP of 12/804,509 07/21/2010
and is a CIP of 12/804,508 07/21/2010
and said 12/841,170 07/21/2010
claims benefit of 61/237,425 08/27/2009
and claims benefit of 61/237,466 08/27/2009
This application 12/913,749
is a CIP of 12/581,825 10/19/2009
and is a CIP of PCT/US09/67044 12/07/2009
and is a CIP of 12/653,085 12/07/2009
and claims benefit of 61/304,403 02/13/2010
and claims benefit of 61/312,100 03/09/2010
and said 12/581,825 10/19/2009

is a DIV of 12/006,774 01/07/2008 PAT 7,628,137
and said PCT/US09/67044 12/07/2009
claims benefit of 61/237,466 08/27/2009
and said 12/653,085 12/07/2009
is a CIP of 12/006,774 01/07/2008 PAT 7,628,137
and said 12/841,170 07/21/2010
claims benefit of 61/237,466 08/27/2009

Foreign Applications (You may be eligible to benefit from the **Patent Prosecution Highway** program at the USPTO. Please see http://www.uspto.gov for more information.)

If Required, Foreign Filing License Granted: 11/05/2010

The country code and number of your priority application, to be used for filing abroad under the Paris Convention, is **US 12/913,749**

Projected Publication Date: 06/23/2011

Non-Publication Request: No

Early Publication Request: No
**** SMALL ENTITY ****
Title

ADAPTIVE CONTROL SYSTEM FOR FUEL INJECTORS AND IGNITERS

Preliminary Class

123

PROTECTING YOUR INVENTION OUTSIDE THE UNITED STATES

Since the rights granted by a U.S. patent extend only throughout the territory of the United States and have no effect in a foreign country, an inventor who wishes patent protection in another country must apply for a patent in a specific country or in regional patent offices. Applicants may wish to consider the filing of an international application under the Patent Cooperation Treaty (PCT). An international (PCT) application generally has the same effect as a regular national patent application in each PCT-member country. The PCT process **simplifies** the filing of patent applications on the same invention in member countries, but **does not result** in a grant of "an international patent" and does not eliminate the need of applicants to file additional documents and fees in countries where patent protection is desired.

Almost every country has its own patent law, and a person desiring a patent in a particular country must make an application for patent in that country in accordance with its particular laws. Since the laws of many countries differ in various respects from the patent law of the United States, applicants are advised to seek guidance from specific foreign countries to ensure that patent rights are not lost prematurely.

Applicants also are advised that in the case of inventions made in the United States, the Director of the USPTO must issue a license before applicants can apply for a patent in a foreign country. The filing of a U.S. patent application serves as a request for a foreign filing license. The application's filing receipt contains further information and guidance as to the status of applicant's license for foreign filing.

Applicants may wish to consult the USPTO booklet, "General Information Concerning Patents" (specifically, the section entitled "Treaties and Foreign Patents") for more information on timeframes and deadlines for filing foreign

patent applications. The guide is available either by contacting the USPTO Contact Center at 800-786-9199, or it can be viewed on the USPTO website at http://www.uspto.gov/web/offices/pac/doc/general/index.html.

For information on preventing theft of your intellectual property (patents, trademarks and copyrights), you may wish to consult the U.S. Government website, http://www.stopfakes.gov. Part of a Department of Commerce initiative, this website includes self-help "toolkits" giving innovators guidance on how to protect intellectual property in specific countries such as China, Korea and Mexico. For questions regarding patent enforcement issues, applicants may call the U.S. Government hotline at 1-866-999-HALT (1-866-999-4158).

LICENSE FOR FOREIGN FILING UNDER

Title 35, United States Code, Section 184

Title 37, Code of Federal Regulations, 5.11 & 5.15

GRANTED

The applicant has been granted a license under 35 U.S.C. 184, if the phrase "IF REQUIRED, FOREIGN FILING LICENSE GRANTED" followed by a date appears on this form. Such licenses are issued in all applications where the conditions for issuance of a license have been met, regardless of whether or not a license may be required as set forth in 37 CFR 5.15. The scope and limitations of this license are set forth in 37 CFR 5.15(a) unless an earlier license has been issued under 37 CFR 5.15(b). The license is subject to revocation upon written notification. The date indicated is the effective date of the license, unless an earlier license of similar scope has been granted under 37 CFR 5.13 or 5.14.

This license is to be retained by the licensee and may be used at any time on or after the effective date thereof unless it is revoked. This license is automatically transferred to any related applications(s) filed under 37 CFR 1.53(d). This license is not retroactive.

The grant of a license does not in any way lessen the responsibility of a licensee for the security of the subject matter as imposed by any Government contract or the provisions of existing laws relating to espionage and the national security or the export of technical data. Licensees should apprise themselves of current regulations especially with respect to certain countries, of other agencies, particularly the Office of Defense Trade Controls, Department of State (with respect to Arms, Munitions and Implements of War (22 CFR 121-128)); the Bureau of Industry and Security, Department of Commerce (15 CFR parts 730-774); the Office of Foreign AssetsControl, Department of Treasury (31 CFR Parts 500+) and the Department of Energy.

NOT GRANTED

No license under 35 U.S.C. 184 has been granted at this time, if the phrase "IF REQUIRED, FOREIGN FILING LICENSE GRANTED" DOES NOT appear on this form. Applicant may still petition for a license under 37 CFR 5.12, if a license is desired before the expiration of 6 months from the filing date of the application. If 6 months has lapsed from the filing date of this application and the licensee has not received any indication of a secrecy order under 35 U.S.C. 181, the licensee may foreign file the application pursuant to 37 CFR 5.15(b).

APPENDIX 2

COVER PAGE FOR PCT PUBLICATION (PCT/US10/54364)

(12) INTERNATIONAL APPLICATION PUBLISHED UNDER THE PATENT COOPERATION TREATY (PCT)

(19) World Intellectual Property Organization
International Bureau

(43) International Publication Date
16 June 2011 (16.06.2011)

PCT

(10) International Publication Number
WO 2011/071608 A2

(51) International Patent Classification:
F02D 41/20 (2006.01) *F02D 41/14* (2006.01)
F02D 41/04 (2006.01) *F02M 51/02* (2006.01)

(21) International Application Number:
PCT/US2010/054364

(22) International Filing Date:
27 October 2010 (27.10.2010)

(25) Filing Language: English

(26) Publication Language: English

(30) Priority Data:

12/653,085	7 December 2009 (07.12.2009)	US
61/304,403	13 February 2010 (13.02.2010)	US
61/312,100	9 March 2010 (09.03.2010)	US
12/841,135	21 July 2010 (21.07.2010)	US
12/841,149	21 July 2010 (21.07.2010)	US
12/804,508	21 July 2010 (21.07.2010)	US
12/804,509	21 July 2010 (21.07.2010)	US
12/804,510	21 July 2010 (21.07.2010)	US
12/841,146	21 July 2010 (21.07.2010)	US
12/841,170	21 July 2010 (21.07.2010)	US

(72) Inventor; and
(71) Applicant : MCALISTER, Roy, E. [US/US]; 2350 W Shangri La, Phoenix, AZ 85029 (US).

(74) Agents: BETCHER, Susan, D. et al.; Perkins Coie LLP, P.O. Box 1247, Seattle, WA 98111-1247 (US).

(81) Designated States *(unless otherwise indicated, for every kind of national protection available)*: AE, AG, AL, AM, AO, AT, AU, AZ, BA, BB, BG, BH, BR, BW, BY, BZ, CA, CH, CL, CN, CO, CR, CU, CZ, DE, DK, DM, DO, DZ, EC, EE, EG, ES, FI, GB, GD, GE, GH, GM, GT, HN, HR, HU, ID, IL, IN, IS, JP, KE, KG, KM, KN, KP, KR, KZ, LA, LC, LK, LR, LS, LT, LU, LY, MA, MD, ME, MG, MK, MN, MW, MX, MY, MZ, NA, NG, NI, NO, NZ, OM, PE, PG, PH, PL, PT, RO, RS, RU, SC, SD, SE, SG, SK, SL, SM, ST, SV, SY, TH, TJ, TM, TN, TR, TT, TZ, UA, UG, US, UZ, VC, VN, ZA, ZM, ZW.

(84) Designated States *(unless otherwise indicated, for every kind of regional protection available)*: ARIPO (BW, GH, GM, KE, LR, LS, MW, MZ, NA, SD, SL, SZ, TZ, UG, ZM, ZW), Eurasian (AM, AZ, BY, KG, KZ, MD, RU, TJ, TM), European (AL, AT, BE, BG, CH, CY, CZ, DE, DK, EE, ES, FI, FR, GB, GR, HR, HU, IE, IS, IT, LT, LU, LV, MC, MK, MT, NL, NO, PL, PT, RO, RS, SE, SI, SK,

[Continued on next page]

(54) Title: ADAPTIVE CONTROL SYSTEM FOR FUEL INJECTORS AND IGNITERS

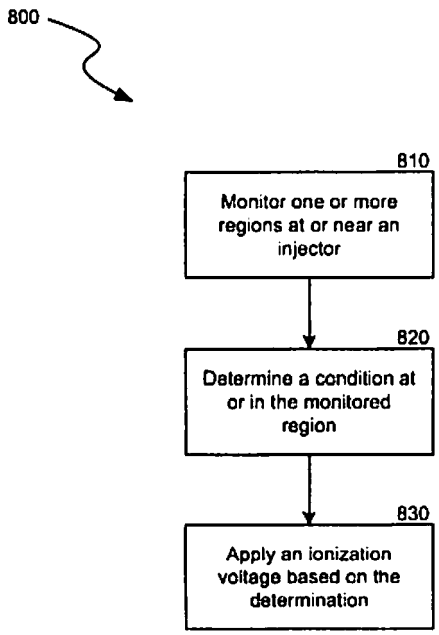

Fig. 8

(57) Abstract: The present disclosure is directed to systems and methods for adjusting the operation of a gasoline-fueled engine based on monitored conditions within a combustion chamber of the engine. In some cases, the system monitors regions within the combustion chamber, identifies or determines a satisfactory condition, and applies an ionization voltage to a fuel injector to initiate a combustion event during the satisfactory condition. In some cases, the system monitors the conditions within the combustion chamber, determines a monitored condition is associated with an adjustment, and adjusts a parameters of a combustion event in order to adjust ionization levels within a combustion chamber.

WO 2011/071608 A2

SM, TR), OAPI (BF, BJ, CF, CG, CI, CM, GA, GN, GQ, GW, ML, MR, NE, SN, TD, TG).

Published:

— *without international search report and to be republished upon receipt of that report (Rule 48.2(g))*

UNITED STATES PATENT AND TRADEMARK OFFICE

Commissioner for Patents
United States Patent and Trademark Office
P.O. Box 1450
Alexandria, VA 22313-1450
www.uspto.gov

MAILED

MAR 24 2011

OFFICE OF PETITIONS

NEIFELD IP LAW, PC
4813-B EISENHOWER AVENUE
ALEXANDRIA, VA 22304

In re Application of	:	
Moskowitz and Cooperman	:	Decision Noting Joinder of Inventor and
Application No. 12/913,751	:	Decision Dismissing Petition Under
Filed: October 27, 2010	:	37 CFR 1.47 as Moot
Attorney Docket No. SCOT0012-9	:	

This is a decision on the petition under 37 CFR 1.47 filed December 3, 2010.[1]

The petition is **dismissed as moot**.

The petition was filed with a declaration signed by inventor Moskowitz. The declaration was not signed by inventor Cooperman.

Papers filed on January 4, 2011, include a declaration signed by Cooperman.

In view of the joinder of Cooperman, consideration of the petition under 37 CFR 1.47 is unnecessary.

Technology Center Art Unit 2624 will be informed of the instant decision to ensure the Art Unit is aware the pending petition has been decided and that the application is in condition to be docketed to an examiner and examined in due course.

Telephone inquiries regarding this communication should be directed to Petitions Attorney Steven Brantley at (571) 272-3203.

Charles Steven Brantley
Senior Petitions Attorney
Office of Petitions

[1] 37 CFR 1.47(b) is only available where none of the inventors sign the oath or declaration. In this case, one of the named inventors has executed the declaration. Therefore, the Office has treated the petition as a petition under 37 CFR 1.47(a).

UNITED STATES PATENT AND TRADEMARK OFFICE

UNITED STATES DEPARTMENT OF COMMERCE
United States Patent and Trademark Office
Address: COMMISSIONER FOR PATENTS
P.O. Box 1450
Alexandria, Virginia 22313-1450
www.uspto.gov

APPLICATION NO.	FILING DATE	FIRST NAMED INVENTOR	ATTORNEY DOCKET NO.	CONFIRMATION NO.
12/913,757	10/27/2010	W. Karl Olander	2771-765-CON	4531

23448 7590 01/07/2011
INTELLECTUAL PROPERTY / TECHNOLOGY LAW
PO BOX 14329
RESEARCH TRIANGLE PARK, NC 27709

EXAMINER

ART UNIT	PAPER NUMBER
1715	

MAIL DATE	DELIVERY MODE
01/07/2011	PAPER

Please find below and/or attached an Office communication concerning this application or proceeding.

The time period for reply, if any, is set in the attached communication.

UNITED STATES PATENT AND TRADEMARK OFFICE

Commissioner for Patents
United States Patent and Trademark Office
P.O. Box 1450
Alexandria, VA 22313-1450
www.uspto.gov

1/7/11

CST

In re application of W. Karl Olander et al Serial No. 12/913,757 Filed: October 27, 2010 For: BORON IMPLANTATION USING ALTERNATIVE FLUORINATED BORON PRECURSORS	: : : : : : : : :	DECISION ON PETITION TO MAKE SPECIAL

This is a decision on the petition filed on October 27, 2010 to make the above-identified application special under the accelerated examination program.

The petition to make the application special is **DENIED.**

REGULATION AND PRACTICE

To be eligible for accelerated examination under 37 C.F.R. § 1.102(d) and pursuant to the "Changes to Practice for Petitions in Patent Applications to Make Special and for Accelerated Examination" published in the Federal Register on June 26, 2006 (71 Fed. Reg. 36323), the following conditions must be satisfied:

1. The application must be a non-reissue utility or design application filed under 37 CFR 1.111(a);
2. The application, the petition and the required fees must be filed electronically using the USPTO's electronic filing system (EFS), or EFS-web; if not filed electronically, a statement asserting that EFS and EFS-web were not available during the normal business hours;
3. The application, at the time of filing, must be complete under 37 CFR 1.51 and in condition for examination;
4. The application must contain three or fewer independent claims and twenty or fewer total claims and the claims must be directed to a single invention.

The application as filed is not eligible for accelerated examination under 37 C.F.R. § 1.102(d) because the application, at the time of filing, was not in condition for examination. Note, specifically, the NOTICE TO FILE MISSING PARTS OF

Application No. 12/913,757

NONPROVISIONAL APPLICATION mailed on November 17, 2010, which indicates that the application was not in condition for examination at the time of filing.

MPEP 708.02(a), section VIII further states:

> The petition to make special will be dismissed if the application omits an item or includes a paper that causes the Office of Initial Patent Examination (OIPE) to mail a notice during the formality review (e.g., a notice of incomplete application, notice to file missing parts, notice to file corrected application papers, notice of omitted items, or notice of informal application). The opportunity to perfect a petition (subsection II above) does not apply to applications that are not in condition for examination on filing.

For the above-stated reasons, the petition is denied. The application will therefore be taken up by the examiner for action in its regular turn.

Any inquiry regarding this decision should be directed to Christine Tierney, Quality Assurance Specialist, at (571) 272-1055.

/Christine Tierney/

Christine Tierney
Quality Assurance Specialist
Technology Center 1700

UNITED STATES PATENT AND TRADEMARK OFFICE

UNITED STATES DEPARTMENT OF COMMERCE
United States Patent and Trademark Office
Address: COMMISSIONER FOR PATENTS
P.O. Box 1450
Alexandria, Virginia 22313-1450
www.uspto.gov

APPLICATION NO.	FILING DATE	FIRST NAMED INVENTOR	ATTORNEY DOCKET NO.	CONFIRMATION NO.
12/913,786	10/28/2010	Emil Shteinvil	49929	4580

67801 7590 01/06/2011
MARTIN D. MOYNIHAN d/b/a PRTSI, INC.
P.O. BOX 16446
ARLINGTON, VA 22215

EXAMINER

ART UNIT	PAPER NUMBER
2178	

MAIL DATE	DELIVERY MODE
01/06/2011	PAPER

Please find below and/or attached an Office communication concerning this application or proceeding.

The time period for reply, if any, is set in the attached communication.

UNITED STATES PATENT AND TRADEMARK OFFICE

Commissioner for Patents
United States Patent and Trademark Office
P.O. Box 1450
Alexandria, VA 22313-1450
www.uspto.gov

MARTIN D. MOYNIHAN d/b/a PRTSI, INC.
P.O. BOX 16446
ARLINGTON VA 22215

In re Application of:
SHTEINVIL, Emil et al.
Application No. 12/913,786
Filed: October 28, 2010
For: **SYSTEM AND METHOD FOR MULTI-CHANNEL PUBLISHING**

DECISION ON PETITION UNDER 37 C.F.R. § 1.84(a)(2) TO ACCEPT COLOR DRAWINGS

This is a decision on the petition under 37 C.F.R. § 1.84(a)(2), filed on November 30, 2010, requesting acceptance of color drawings.

The petition requests that the color drawings/photographs be accepted in lieu of black and white drawings.

A grantable petition under 37 C.F.R. § 1.84(a)(2) must be accompanied by a fee set forth under 37 C.F.R. § 1.17(h), explanation why the color drawings are necessary, 3 (three) sets of the color drawings in question, and the specification must contain, or be amended to contain, the following language as the first paragraph in that portion of the specification relating to the brief description of the drawings:

"the file of this patent contains at least one drawing executed in color. Copies of this patent with color drawing(s) will be provided by the Patent and Trademark Office upon request and payment of the necessary fee."

The petition was filed electronically with the required fee, and a single set of color drawings (Figures 2-17), which is acceptable. However, the amendment to the specification filed on November 30, 2010 has not been entered. M.P.E.P. 714(II) specifies that any amendment to the specification "must begin on a separate sheet entitled 'Amendments to the Specification.'" As a result, the specification of the instant application does not contain the required notification described above.

Accordingly, the petition is **DISMISSED**.

Any inquiry regarding this decision should be directed to Eddie C. Lee at (571) 272-1732.

/Eddie C. Lee/

Eddie C. Lee
Quality Assurance Specialist, TC 2100
(571) 272-1732

UNITED STATES PATENT AND TRADEMARK OFFICE

UNITED STATES DEPARTMENT OF COMMERCE
United States Patent and Trademark Office
Address: COMMISSIONER FOR PATENTS
P.O. Box 1450
Alexandria, Virginia 22313-1450
www.uspto.gov

APPLICATION NO.	FILING DATE	FIRST NAMED INVENTOR	ATTORNEY DOCKET NO.	CONFIRMATION NO.
12/913,786	10/28/2010	Emil Shteinvil	49929	4580

67801 7590 02/26/2011
MARTIN D. MOYNIHAN d/b/a PRTSI, INC.
P.O. BOX 16446
ARLINGTON, VA 22215

EXAMINER

ART UNIT	PAPER NUMBER
2178	

MAIL DATE	DELIVERY MODE
02/26/2011	PAPER

Please find below and/or attached an Office communication concerning this application or proceeding.

The time period for reply, if any, is set in the attached communication.

UNITED STATES PATENT AND TRADEMARK OFFICE

Commissioner for Patents
United States Patent and Trademark Office
P.O. Box 1450
Alexandria, VA 22313-1450
www.uspto.gov

MARTIN D. MOYNIHAN d/b/a PRTSI, INC.
P.O. BOX 16446
ARLINGTON VA 22215

In re Application of:
SHTEINVIL, Emil et al.
Application No. 12/913,786
Filed: October 28, 2010
For: **SYSTEM AND METHOD FOR MULTI-CHANNEL PUBLISHING**

DECISION ON PETITION UNDER 37 C.F.R. § 1.84(a)(2) TO ACCEPT COLOR DRAWINGS

This is a decision on the request for reconsideration of petition under 37 C.F.R. § 1.84(a)(2), filed on January 27, 2011 requesting acceptance of color drawings.

A grantable petition under 37 C.F.R. § 1.84(a)(2) must be accompanied by a fee set forth under 37 C.F.R. § 1.17(h), 3 (three) sets of the color drawings in question, and the specification must contain, or be amended to contain, the following language as the first paragraph in that portion of the specification relating to the brief description of the drawings:

"the file of this patent contains at least one drawing executed in color. Copies of this patent with color drawing(s) will be provided by the Patent and Trademark Office upon request and payment of the necessary fee."

The petition was filed with the required fee and was filed EFS-Web with one set of color drawings. Additionally, the amendment filed January 27, 2011 contains the required notification described above.

Accordingly, the petition is **GRANTED**.

Any inquiry regarding this decision should be directed to Eddie C. Lee at (571) 272-1732.

/Eddie C. Lee/

Eddie C. Lee
Quality Assurance Specialist, TC 2100

UNITED STATES PATENT AND TRADEMARK OFFICE

Commissioner for Patents
United States Patent and Trademark Office
P.O. Box 1450
Alexandria, VA 22313-1450
www.uspto.gov

In re Application of
Hillel WEINSTEIN

Application No. 12913803

Filed:

Attorney Docket No. 5616/2.3

:DECISION ON PETITION TO MAKE SPECIAL
:UNDER 37 CFR 1.102(c)(1)

This is a decision on the electronic petition under 37 CFR 1.102 (c)(1), filed 28-OCT-2010 to make the above-identified application special based on applicant's age as set forth in MPEP § 708.02, Section IV.

The petition is **GRANTED**.

A grantable petition to make an application special under 37 CFR 1.102(c)(1), MPEP § 708.02, Section IV: Applicant's Age must include a statement by applicant or a registered practitioner having evidence that applicant is at least 65 years of age. No fee is required.

Accordingly, the above-identified application has been accorded "special" status and will be taken up for action by the examiner upon the completion of all pre-examination processing.

Telephone inquiries concerning this electronic decision should be directed to the Electronic Business Center at 866-217-9197.

All other inquiries concerning either the examination or status of the application should be directed to the Technology Center.

UNITED STATES PATENT AND TRADEMARK OFFICE

UNITED STATES DEPARTMENT OF COMMERCE
United States Patent and Trademark Office
Address: COMMISSIONER FOR PATENTS
P.O. Box 1450
Alexandria, Virginia 22313-1450
www.uspto.gov

APPLICATION NO.	FILING DATE	FIRST NAMED INVENTOR	ATTORNEY DOCKET NO.	CONFIRMATION NO.
12/913,836	10/28/2010	Andrea COCCHI	20545-0644	4683

7590 03/14/2012
SHUTTLEWORTH & INGERSOLL, P.L.C.
115 3RD STREET SE, SUITE 500
P.O. BOX 2107
CEDAR RAPIDS, IA 52406

EXAMINER
SHAVER, KEVIN P

ART UNIT	PAPER NUMBER
3754	

NOTIFICATION DATE	DELIVERY MODE
03/14/2012	ELECTRONIC

DECISION GRANTING PETITION UNDER 37 CFR 1.138(d)

The declaration of express abandonment is recognized

This is in response to the petition under 37 CFR 1.138(d), requesting for a refund of any previously paid search fee and excess claims fee in the above-identified application.

The petition is granted.

The express abandonment is recognized. Any previously paid search fee and excess claims fee are hereby refunded.

Telephone inquiries should be directed to the Office of Data Management at (571) 272-4200.

Patent Publication Branch
Office of Data Management

FORM PET651G (Rev. 08/07)

PTO/SB/20PCT-KR (06-10)
Approved for use through 01/31/2012. OMB 0651-0058
U.S. Patent and Trademark Office; U. S. DEPARTMENT OF COMMERCE
Under the Paperwork Reduction Act of 1995, no persons are required to respond to a collection of information unless it displays a valid OMB control number.

REQUEST FOR PARTICIPATION IN THE PATENT COOPERATION TREATY - PATENT PROSECUTION HIGHWAY (PCT-PPH) PILOT PROGRAM BETWEEN THE KOREAN INTELLECTUAL PROPERTY OFFICE (KIPO) AND THE USPTO

Application No:		Filing date:	10/28/2010
First Named Inventor:	Tad Petrick		
Title of the Invention:	Wire Management Vanity Panel for Folding Table		

THIS REQUEST FOR PARTICIPATION IN THE PCT-PPH PILOT PROGRAM ALONG WITH THE REQUIRED DOCUMENTS MUST BE SUBMITTED VIA EFS-WEB. INFORMATION REGARDING EFS-WEB IS AVAILABLE AT HTTP://WWW.USPTO.GOV/EBC/EFS_HELP.HTML

APPLICANT HEREBY REQUESTS PARTICIPATION IN THE PCT-PPH PROGRAM AND PETITIONS TO MAKE THE ABOVE-IDENTIFIED APPLICATION SPECIAL UNDER THE PCT-PPH PROGRAM.

The above-identified application is (1) a national stage entry of the corresponding PCT application, or (2) a national stage entry of another PCT application which claims priority to the corresponding PCT application, or (3) a national application that claims domestic/ foreign priority to the corresponding PCT application, or (4) a national application which forms the basis for the priority claim in the corresponding PCT application, or (5) a continuing application of a U.S. application that satisfies one of (1) to (4) above, or (6) a U.S. application that claims domestic benefit to a U.S. provisional application which forms the basis for the priority claim in the corresponding PCT application.

The corresponding PCT application number(s) is/are: PCT/US2010/021214

The international date of the corresponding PCT application(s) is/are: January 15, 2010

I. List of Required Documents:

a. **A copy of the latest international work product (WO/ISA, WO/IPEA, or IPER) in the above–identified corresponding PCT application(s)**

- [x] Is attached.
- [ ] Is not attached because the document is already in the U.S. application.

b. **A copy of all claims which were indicated as having novelty, inventive step and industrial applicability in the above-identified corresponding PCT application(s).**

- [x] Is attached.
- [ ] Is not attached because the document is already in the U.S. application.

c. **English translations of the documents in a. and b. above are attached (if the documents are not in the English language). A statement that the English translation is accurate is attached for the document in b. above.**

This collection of information is required by 35 U.S.C. 119, 37 CFR 1.55, and 37 CFR 1.102(d). The information is required to obtain or retain a benefit by the public, which is to file (and by the USPTO to process) an application. Confidentiality is governed by 35 U.S.C. 122 and 37 CFR 1.11 and 1.14. This collection is estimated to take 2 hours to complete, including gathering, preparing, and submitting the completed application form to the USPTO. Time will vary depending upon the individual case. Any comments on the amount of time you require to complete this form and/or suggestions for reducing this burden should be sent to the Chief Information Officer, U.S. Patent and Trademark Office, U.S. Department of Commerce, P.O. Box 1450, Alexandria, VA 22313-1450. DO NOT SEND FEES OR COMPLETED FORMS TO THIS ADDRESS.

Approved for use through 01/31/2012. OMB 0651-0058
U.S.Patent and Trademark Office; U.S. DEPARTMENT OF COMMERCE
Under the Paperwork Reduction Act of 1995, no persons are required to respond to a collection of information unless it displays a valid OMB control number.

REQUEST FOR PARTICIPATION IN THE PCT-PPH PILOT PROGRAM BETWEEN THE KIPO AND THE USPTO

(continued)

Application No.:	
First Named Inventor:	

d. **(1) An information disclosure statement listing the documents cited in the international work products (ISR, WO/ISA, WO/IPEA, IPER) of the corresponding PCT application.**

☒ Is attached

☐ Has already been filed in the above-identified U.S. application on _____

(2) Copies of all documents (except) for U.S. patents or U.S. patent application publications)

☒ Are attached.

Have already been filed in the above-identified U.S. application on _____

II. Claims Correspondence Table:

Claims in US Application	Patentable Claims in the corresponding PCT Application	Explanation regarding the correspondence
1	1	Direct Correspondence - no changes
2	2	Direct Correspondence - no changes
3	3	Direct Correspondence - no changes
4	4	Direct Correspondence - no changes
5	5	Direct Correspondence - no changes
6	6	Direct Correspondence - no changes
7	7	Direct Correspondence - no changes
8	8	Direct Correspondence - no changes
9	9	Direct Correspondence - no changes
10	10	Direct Correspondence - no changes
11	11	Direct Correspondence - no changes
12	12	Direct Correspondence - no changes

III. All the claims in the US application sufficiently correspond to the patentable claims in the corresponding PCT application.

Signature	/John C. Gorecki/	Date	10/28/2010
Name (Print/Typed)	John C. Gorecki	Registration Number	38,471

Privacy Act Statement

The **Privacy Act of 1974 (P.L. 93-579)** requires that you be given certain information in connection with your submission of the attached form related to a patent application or patent. Accordingly, pursuant to the requirements of the Act, please be advised that: (1) the general authority for the collection of this information is 35 U.S.C. 2(b)(2); (2) furnishing of the information solicited is voluntary; and (3) the principal purpose for which the information is used by the U.S. Patent and Trademark Office is to process and/or examine your submission related to a patent application or patent. If you do not furnish the requested information, the U.S. Patent and Trademark Office may not be able to process and/or examine your submission, which may result in termination of proceedings or abandonment of the application or expiration of the patent.

The information provided by you in this form will be subject to the following routine uses:

1. The information on this form will be treated confidentially to the extent allowed under the Freedom of Information Act (5 U.S.C. 552) and the Privacy Act (5 U.S.C 552a). Records from this system of records may be disclosed to the Department of Justice to determine whether disclosure of these records is required by the Freedom of Information Act.
2. A record from this system of records may be disclosed, as a routine use, in the course of presenting evidence to a court, magistrate, or administrative tribunal, including disclosures to opposing counsel in the course of settlement negotiations.
3. A record in this system of records may be disclosed, as a routine use, to a Member of Congress submitting a request involving an individual, to whom the record pertains, when the individual has requested assistance from the Member with respect to the subject matter of the record.
4. A record in this system of records may be disclosed, as a routine use, to a contractor of the Agency having need for the information in order to perform a contract. Recipients of information shall be required to comply with the requirements of the Privacy Act of 1974, as amended, pursuant to 5 U.S.C. 552a(m).
5. A record related to an International Application filed under the Patent Cooperation Treaty in this system of records may be disclosed, as a routine use, to the International Bureau of the World Intellectual Property Organization, pursuant to the Patent Cooperation Treaty.
6. A record in this system of records may be disclosed, as a routine use, to another federal agency for purposes of National Security review (35 U.S.C. 181) and for review pursuant to the Atomic Energy Act (42 U.S.C. 218(c)).
7. A record from this system of records may be disclosed, as a routine use, to the Administrator, General Services, or his/her designee, during an inspection of records conducted by GSA as part of that agency's responsibility to recommend improvements in records management practices and programs, under authority of 44 U.S.C. 2904 and 2906. Such disclosure shall be made in accordance with the GSA regulations governing inspection of records for this purpose, and any other relevant (*i.e.*, GSA or Commerce) directive. Such disclosure shall not be used to make determinations about individuals.
8. A record from this system of records may be disclosed, as a routine use, to the public after either publication of the application pursuant to 35 U.S.C. 122(b) or issuance of a patent pursuant to 35 U.S.C. 151. Further, a record may be disclosed, subject to the limitations of 37 CFR 1.14, as a routine use, to the public if the record was filed in an application which became abandoned or in which the proceedings were terminated and which application is referenced by either a published application, an application open to public inspection or an issued patent.
9. A record from this system of records may be disclosed, as a routine use, to a Federal, State, or local law enforcement agency, if the USPTO becomes aware of a violation or potential violation of law or regulation.

IN THE UNITED STATES PATENT AND TRADEMARK OFFICE

Applicant:	Tad PETRICK, et al.	Examiner:	Unassigned
Continuation of PCT/2010/021214		Art Unit:	Unassigned
Filed:	October 28, 2010	Attorney Docket No.:	BI-063US
Title:	WIRE MANAGEMENT VANITY PANEL FOR FOLDING TABLE		

CERTIFICATE OF ELECTRONIC TRANSMISSION

I hereby certify that this document, along with any other papers referred to as being attached or enclosed, is being filed electronically on October 28, 2010.

/John C. Gorecki/ .
John C. Gorecki, Reg. No. 38,471

Commissioner for Patents
P.O. Box 1450
Alexandria, VA 22313-1450

CLAIMS FROM CORRESPONDING PCT APPLICATION

Dear Sir:

The claims that were subject to examination in the corresponding PCT application are set forth starting on page 2 of this document.

CLAIMS

Claim 1. (Original) A table, comprising:

a plurality of legs;

a table working surface supported by the legs; and

a folding modesty panel attached to the table working surface, the folding modesty panel being connected to the table working surface and having at least one folding portion that may selectively fold to be disposed adjacent an underside of the table working surface or to be selectively unfolded to extend away from the underside of the table working surface, the folding portion including a wire management channel to retain wires as the folding portion is folded and unfolded.

Claim 2. (Original) The table of claim 1, wherein the wire management channel comprises a J-shaped wire management channel.

Claim 3. (Original) The table of claim 2, wherein the J-shaped wire management channel enables wires to be retained by the modesty panel when the modesty panel is folded up along the underside of the table working surface, while the modesty panel is being unfolded, and after the modesty panel has been fully unfolded.

Claim 4. (Original) The table of claim 2, wherein the folding portion of the modesty panel has a flat section designed to extend away from the table working surface when unfolded, a bent section, and a lip.

Claim 5. (Original) The table of claim 4, wherein the bent section extends approximately 90 degrees from the flat section, and the lip extends approximately 90 degrees from the bent section, the bent section and lip defining a bottom of the J-shaped wire management channel.

Claim 6. (Original) The table of claim 1, wherein the folding modesty panel further comprises a fixed portion connected to an underside of the table working surface, and wherein the folding portion is hingedly connected to the fixed portion.

Claim 7. (Original) The table of claim 6, wherein the folding portion of the modesty panel has a flat section that is hingedly connected to the fixed portion on a first side and is designed to extend away from the table working surface when unfolded, the folding portion of the modesty panel further having a bent section that is connected to the flat section at a second side of the flat section at an approximate 90 degree angle to the flat section, the bent section further including a lip formed at a distal end to retain wires within a J-shaped channel defined by the flat section, bent section and lip.

Claim 8. (Original) The table of claim 7, wherein a width of the bent section is approximately equal to a width of the fixed portion.

Claim 9. (Original) The table of claim 1, wherein the table working surface is connected to the legs via one or more hinges to enable the table working surface to be pivoted to a vertical position for storage.

Claim 10. (Original) The table of claim 9, wherein the folding portion of the modesty panel enables the folding portion of the modesty panel to be folded to lie approximately parallel to the table while the table is in the vertical position.

Claim 11. (Original) The table of claim 9, further comprising locking hinges to retain the folding portion of the modesty panel adjacent the lower surface of the table while the table is in the vertical position.

Claim 12. (Original) The table of claim 9, wherein the folding portion of the modesty panel defines a J-shaped channel, which, when folded up into a folded position, causes the folding modesty panel to form a closed channel along an underside of the working surface of the table.

REMARKS

No fees are believed due in connection with this filing. If any fees are due in connection with this filing, the Commissioner is hereby authorized to charge payment of the fees associated with this communication or credit any overpayment to Deposit Account No. 502246 (Ref. BI-063US).

Respectfully Submitted

Dated: October 28, 2010

/John C. Gorecki/ .
John C. Gorecki, Reg. No. 38,471

Anderson Gorecki & Manaras LLP
P.O. Box 553
Carlisle, MA 01741
Tel: (978) 264-4001
Fax: (978) 264-9119
john@gorecki.us

UNITED STATES PATENT AND TRADEMARK OFFICE

UNITED STATES DEPARTMENT OF COMMERCE
United States Patent and Trademark Office
Address: COMMISSIONER FOR PATENTS
P.O. Box 1450
Alexandria, Virginia 22313-1450
www.uspto.gov

APPLICATION NO.	FILING DATE	FIRST NAMED INVENTOR	ATTORNEY DOCKET NO.	CONFIRMATION NO.
12/913,895	10/28/2010	Tad Petrick	BI-063US	4787

34645 7590 12/15/2010
Anderson Gorecki & Manaras, LLP
Attn: John C. Gorecki
P.O BOX 553
CARLISLE, MA 01741

EXAMINER

ART UNIT	PAPER NUMBER
3637	

NOTIFICATION DATE	DELIVERY MODE
12/15/2010	ELECTRONIC

Please find below and/or attached an Office communication concerning this application or proceeding.

The time period for reply, if any, is set in the attached communication.

Notice of the Office communication was sent electronically on above-indicated "Notification Date" to the following e-mail address(es):

john@gorecki.us
jgorecki@smmalaw.com
officeadmin@smmalaw.com

UNITED STATES PATENT AND TRADEMARK OFFICE

Commissioner for Patents
United States Patent and Trademark Office
P.O. Box 1450
Alexandria, VA 22313-1450
www.uspto.gov

DEC 14 2010

Anderson Gorecki & Manaras, LLP
Attn: John C. Gorecki
P.O BOX 553
CARLISLE MA 01741

In re application of Petrick et al. Application No. 12/913,895 Filed: October 28, 2010 For: WIRE MANAGEMENT VANITY PANEL FOR FOLDING TABLE	**DECISION ON REQUEST TO PARTICIPATE IN PATENT PROSECUTION HIGHWAY PROGRAM AND PETITION TO MAKE SPECIAL UNDER 37 CFR 1.102(a)**

This is a decision on the request to participate in the Patent Prosecution Highway (PPH) program and the petition under 37 CFR 1.102(a), filed October 28, 2010, to make the above-identified application special.

The request and petition are **GRANTED**.

A grantable request to participate in the PPH program and petition to make special require:

(1) The U.S. application must disclose an eligible relationship to one or more PCT applications filed in the KIPO, EPO or USPTO;
(2) Applicant must submit a copy of the allowable/patentable claim(s) from the PCT application(s) latest international work product (the written opinion or the IPER) along with an English translation thereof and a statement that the English translation is accurate;
(3) All the claims in the U.S. application must sufficiently correspond or be amended to sufficiently correspond to the allowable/patentable claim(s) in the PCT application(s);
(4) Examination of the U.S. application has not begun;
(5) Applicant must submit a copy of the latest international work product from the PCT application containing the allowable/patentable claim(s) along with an English translation thereof and a statement that the English translation is accurate;
(6) Applicant must submit an IDS listing the documents cited by the PCT examiner in the international work product along with copies of documents except U.S. patents or U.S. patent application publications.

In light of the petition being properly submitted via EFS-Web as is required, the request to participate in the PPH program complies with the above requirements, the above-identified application has been accorded "special" status.

All other inquiries concerning the examination or status of the application should be directed to the Patent Application Information Retrieval (PAIR) system.

The application is being forwarded to the examiner for action on the merits commensurate with this decision as soon as any pre-exam processing has been completed.

Any inquiry regarding this decision should be directed to Mikado Buiz, Quality Assurance Specialist, at (571) 272-6578.

/ Mikado Buiz /

Mikado Buiz,
Quality Assurance Specialist
Technology Center 3600

MB/MB: 12/14/10

UNITED STATES PATENT AND TRADEMARK OFFICE

Commissioner for Patents
United States Patent and Trademark Office
P.O. Box 1450
Alexandria, VA 22313-1450
www.uspto.gov

SAND & SEBOLT
AEGIS TOWER, SUITE 1100
4940 MUNSON STREET, NW
CANTON OH 44718-3615

MAILED
FEB 22 2012
OFFICE OF PETITIONS

In re Application of
Miraslav Royz et al
Application No. 12/913,960
Filed: October 28, 2010
Attorney Docket No. 2692001USIAP

DECISION GRANTING PETITION
UNDER 37 CFR 1.313(c)(2)

This is a decision on the petition under 37 CFR 1.313(c)(2), filed February 21, 2012, to withdraw the above-identified application from issue after payment of the issue fee.

The petition is **GRANTED**.

The above-identified application is withdrawn from issue for consideration of a submission under 37 CFR 1.114 (request for continued examination). *See* 37 CFR 1.313(c)(2).

Petitioner is advised that the issue fee paid on January 27, 2012 cannot be refunded. If, however, this application is again allowed, petitioner may request that it be applied towards the issue fee required by the new Notice of Allowance.[1]

Telephone inquiries should be directed to the undersigned at (571) 272-3208.

This application is being referred to Technology Center AU 3632 for processing of the request for continued examination under 37 CFR 1.114 and for consideration of the concurrently filed IDS.

/Karen Creasy/
Karen Creasy
Petitions Examiner
Office of Petitions

[1] *The request to apply the issue fee to the new Notice may be satisfied by completing and returning the new Part B – Fee(s) Transmittal Form (along with any balance due at the time of submission). Petitioner is advised that the Issue Fee Transmittal Form* ***must*** *be completed and timely submitted to avoid abandonment of the application.*

UNITED STATES PATENT AND TRADEMARK OFFICE

Commissioner for Patents
United States Patent and Trademark Office
P.O. Box 1450
Alexandria, VA 22313-1450
www.uspto.gov

MAILED
JUN 14 2011
OFFICE OF PETITIONS

PHILIP S. JOHNSON
JOHNSON & JOHNSON
ONE JOHNSON & JOHNSON PLAZA
NEW BRUNSWICK NJ 08933-7003

In re Application of :
Steven J. Coats et al. :
Application No. 12/913,986 : ON PETITION
Filed: October 28, 2010 :
Attorney Docket No. PRD3129USNP :

This is in response to the petition filed November 30, 2010, under 37 CFR 1.59, to expunge information "unintentionally submitted" in the above-identified application.

The petition is **DISMISSED.**

Petitioner requests that the "patent application entitled PYRIMIDINE COMPOUNDS AS DELTA OPIOID RECEPTOR MODULATORS submitted on October 28, 2010, and the unexecuted inventors' declarations and powers of attorney, application transmittal and Information Disclosure Statement filed therewith be expunged, since these documents were unintentionally submitted" be expunged.

37 CFR 1.59 states:

> (a)(1) Information in an application will not be expunged, except as provided in paragraph (b) of this section or § 41.7(a) of this title.
>
> (2) Information forming part of the original disclosure (i.e., written specification including the claims, drawings, and any preliminary amendment specifically incorporated into an executed oath or declaration under §§ 1.63 and 1.175) will not be expunged from the application file.
>
> (b) An applicant may request that the Office expunge information, other than what is excluded by paragraph (a)(2) of this section, by filing a petition under this paragraph. Any petition to expunge information from an application must include the fee set forth in § 1.17(g) and establish to the satisfaction of the Director that the expungement of the information is appropriate in which case a notice granting the petition for expungement will be provided.

In the instant case, petitioner filed on October 28, 2010, a non-provisional application under 35 U.S.C. 111, which formed an original disclosure. An expungement of the "patent application entitled PYRIMIDINE COMPOUNDS AS DELTA OPIOID RECEPTOR MODULATORS submitted on October 28, 2010, and the unexecuted inventors' declarations and powers of attorney, application transmittal and Information Disclosure Statement filed therewith" would, in effect, be an expungement of a part of the original disclosure. 37 CFR 1.59(a) precludes the expungement of a part of original disclosure. Accordingly, the petition is dismissed.

Petitioner should note that any consideration of a request for a waiver of a requirement, that is not part of the statutes, will only be undertaken under the provisions of 37 CFR 1.183.

Telephone inquiries regarding this decision should be directed to the undersigned at (571) 272-4914.

Ramesh Krishnamurthy

Ramesh Krishnamurthy
Petitions Examiner
Office of Petitions

UNITED STATES PATENT AND TRADEMARK OFFICE

Commissioner for Patents
United States Patent and Trademark Office
P.O. Box 1450
Alexandria, VA 22313-1450
www.uspto.gov

CARLSON, GASKEY & OLDS, P.C.
400 WEST MAPLE ROAD
SUITE 350
BIRMINGHAM MI 48009

MAILED

JUN 15 2011

OFFICE OF PETITIONS

In re Application of
Basir, et al.
Application No. 12/914,047
Filed/Deposited: 28 October , 2010
Attorney Docket No. (None)

DECISION ON PETITION

This is a decision on the petition filed on 8 June, 2011, pursuant to 37 C.F.R. §1.47.

NOTE:

Petitioner has failed to file an Application Data Sheet (ADS) from which the Office might draw important file data (e.g., inventors' names, docket number, etc.).

Petitioner appears to have ignored the requirements pursuant to 37 C.F.R. §1.47(a) and the guidance in the Commentary at MPEP §409.03, and §409.03(a) in this regard.

The petition as considered pursuant to 37 C.F.R. §1.47(a) is **DISMISSED**.

Rule 47 applicant is given TWO (2) MONTHS from the mailing date of this decision to reply, correcting the below-noted deficiencies. Any reply should be entitled "Request for Reconsideration of Petition Pursuant to 37 C.F.R. §1.47(a)," and should only address the deficiencies noted below, except that the reply may include an oath or declaration executed by the non-signing inventor. **FAILURE TO RESPOND WILL RESULT IN ABANDONMENT OF THE APPLICATION.** Any extensions of time will be governed by 37 C.F.R. §1.136(a).

This is **not** a final agency action within the meaning of 5 U.S.C. §704.

A grantable petition pursuant to 37 C.F.R. §1.47(a) requires: (1) petition and fee; (2) proof that the non-signing inventor cannot be reached or refuses to sign the oath or declaration after having been presented with the application papers (specification: description, claims and drawings); (3) an acceptable oath or declaration in compliance with 35 U.S.C. §§ 115 and 116; and (4) a

statement of the last known address of the non-signing inventor(s)—with diligence in the effort to ascertain the validity of the address set forth as the reasonably believed to be last known/current/valid address.

Petitioner does not seem to have worked through the requirements of the petition, as set forth above, in satisfaction of those requirements. (*See, generally:* MPEP §409.03, and §409.03(a)—the applicable statute (35 U.S.C.§ 116).

In particular, Petitioner has not as of this writing satisfied the requirement(s) of the petition as listed above and discussed below.

Petitioners always are reminded that for transmission by Email of any document to be accepted by the Office, written acknowledgment of receipt and readability of the message and all applicable attachments of required materials must be provided.

BACKGROUND

The record reflects as follows:

The application was deposited on 28 October, 2010, without, *inter alia*, a fully executed oath/declaration

On 8 November, 2010, the Office mailed a Notice of Missing Parts requiring, *inter alia*, a fully executed oath/declaration.

On 8 June, 2011, Petitioner John M. Siragusa (Reg. No. 46,174) filed, *inter alia*, a request and fee for extension of time, a petition pursuant to the regulations at 37 C.F.R. §1.47, with an oath/declaration executed by co-inventors Basir, Miners and Hawari for themselves and on behalf of non-signing co-inventor Frank Friesacher (Mr. Friesacher), with a statement by Petitioner, however, a review of the papers submitted, evidenced only Email transmittal, without any showing of receipt and readability of the message and the attachments and reply thereto by the non-signing inventor, with Petitioner's failure to state over his signature and registration number the valid/current/reasonably believed to be last known mailing address for the non-signing inventor with transmittal of the entire application (description, claims, abstract, drawings) to the non-signing inventor. There also is no demonstration as to any diligence employed in an effort to ascertain a valid/current/reasonably believed to be last known address for the non-signing inventor. Thus there is at this writing insufficient showing of the requirement that the entire application—description, claims, abstract and drawing—was transmitted to valid/current/reasonably believed to be last known addresses for the non-signing inventor with his refusal to sign/join.

Petitioners always are reminded:

- *for transmission by Email of any document to be accepted by the Office, written acknowledgment of receipt and readability of the message and all applicable attachments of required materials must be provided; and*

- *of the duties of candor to—with requirement for diligent inquiry before—the Office and to satisfy the Rules of Practice and the guidance in the Commentary at MPEP §409.03, and §409.03(a), et seq.*

Out of an abundance of caution, Petitioner should step through the requirements of a grantable petition under 37 C.F.R. §1.47(a) (i.e., (1) petition and fee; (2) proof that the non-signing inventor cannot be reached or refuses to sign the oath or declaration after having been presented with the application papers (specification: description, claims and drawings); (3) an acceptable oath or declaration in compliance with 35 U.S.C. §§ 115 and 116; and (4) a statement of the last known address of the non-signing inventor(s)—with diligence in the effort to ascertain the validity of the address set forth as the reasonably believed to be last known/current/valid address) and satisfy himself that he has complied with these requirements on submission of any renewed petition. (*See also*: the guidance in the Commentary at MPEP §409.03, and §409.03(a), et seq.)

Again, Petitioner has not worked through the requirements of the petition.

Thus, the present incompleteness of the record makes granting of the instant petition inappropriate.

The availability of applications and application papers online to applicants/practitioners who diligently associate their Customer Number with the respective application(s) now provides an applicant/practitioner on-demand information as to events/transactions in an application. Thus, now if one wishes to know the progress in and/or status of an application or the accuracy of the data therein, one need only look at the file online.

Out of an abundance of caution, Petitioners always are reminded that those registered to practice *and* all others who make representations before the Office must inquire into the underlying facts of representations made to the Office and support averments with the appropriate documentation–since all owe to the Office the continuing duty to disclose.[1]

The instant petition pursuant to 37 C.F.R. §1.47(a) is **dismissed**.

[1] See supplement of 17 June, 1999. The Patent and Trademark Office is relying on petitioner's duty of candor and good faith and accepting a statement made by Petitioner. See Changes to Patent Practice and Procedure, 62 Fed. Reg. at 53160 and 53178, 1203 Off. Gaz. Pat. Office at 88 and 103 (responses to comments 64 and 109)(applicant obligated under 37 C.F.R. §10.18 to inquire into the underlying facts and circumstances when providing statements to the Patent and Trademark Office). See specifically, the regulations at 37 C.F.R. §10.18.

Further correspondence with respect to this matter should be addressed as follows:

By mail:	Mail Stop PETITIONS Commissioner for Patents Post Office Box 1450 Alexandria, VA 22313-1450
By hand:	Customer Service Window Mail Stop Petitions Randolph Building 401 Dulany Street Alexandria, VA 22314
By FAX:	(571) 273-8300 ATTN: Office of Petitions

While telephone inquiries regarding this decision may be directed to the undersigned at (571) 272-3214—it is noted, however, that all practice before the Office is in writing (see: 37 C.F.R. §1.2[2]) and the proper authority for action on any matter in this regard are the statutes (35 U.S.C.), regulations (37 C.F.R.) and the commentary on policy (MPEP). Therefore, no telephone discussion may be controlling or considered authority for Petitioner's action(s).

/John J. Gillon, Jr./
John J. Gillon, Jr.
Senior Attorney
Office of Petitions

---

[2] The regulations at 37 C.F.R. §1.2 provide:

§1.2 Business to be transacted in writing.
All business with the Patent and Trademark Office should be transacted in writing. The personal attendance of applicants or their attorneys or agents at the Patent and Trademark Office is unnecessary. The action of the Patent and Trademark Office will be based exclusively on the written record in the Office. No attention will be paid to any alleged oral promise, stipulation, or understanding in relation to which there is disagreement or doubt.

UNITED STATES PATENT AND TRADEMARK OFFICE

Commissioner for Patents
United States Patent and Trademark Office
P.O. Box 1450
Alexandria, VA 22313-1450
www.uspto.gov

CARLSON, GASKEY & OLDS, P.C.
400 WEST MAPLE ROAD
SUITE 350
BIRMINGHAM MI 48009

MAILED

AUG 19 2011

OFFICE OF PETITIONS

In re Application of
Basir, et al.
Application No. 12/914,047
Filed/Deposited: 28 October , 2010
Attorney Docket No. (None)

DECISION ON PETITION

This is a decision on the petition filed on 18 August, 2011, pursuant to 37 C.F.R. §1.47.

The petition as considered pursuant to 37 C.F.R. §1.47(a) is **DISMISSED**.

A grantable petition pursuant to 37 C.F.R. §1.47(a) requires: (1) petition and fee; (2) proof that the non-signing inventor cannot be reached or refuses to sign the oath or declaration after having been presented with the application papers (specification: description, claims and drawings); (3) an acceptable oath or declaration in compliance with 35 U.S.C. §§ 115 and 116; and (4) a statement of the last known address of the non-signing inventor(s)—with diligence in the effort to ascertain the validity of the address set forth as the reasonably believed to be last known/current/valid address.

Petitioners always are reminded that for transmission by Email of any document to be accepted by the Office, written acknowledgment of receipt and readability of the message and all applicable attachments of required materials must be provided.

BACKGROUND

The record reflects as follows:

The application was deposited on 28 October, 2010, without, *inter alia*, a fully executed oath/declaration

On 8 November, 2010, the Office mailed a Notice of Missing Parts requiring, *inter alia*, a fully executed oath/declaration.

On 8 June, 2011, Petitioner John M. Siragusa (Reg. No. 46,174) filed, *inter alia*, a request and fee for extension of time, a petition pursuant to the regulations at 37 C.F.R. §1.47, with an oath/declaration executed by co-inventors Basir, Miners and Hawari for themselves and on behalf of non-signing co-inventor Frank Friesacher (Mr. Friesacher), with a statement by Petitioner, however, a review of the papers submitted, evidenced only Email transmittal, without any showing of receipt and readability of the message and the attachments and reply thereto by the non-signing inventor, with Petitioner's failure to state over his signature and registration number the valid/current/reasonably believed to be last known mailing address for the non-signing inventor with transmittal of the entire application (description, claims, abstract, drawings) to the non-signing inventor. There also is no demonstration as to any diligence employed in an effort to ascertain a valid/current/reasonably believed to be last known address for the non-signing inventor. Because there was insufficient showing of the requirement that the entire application—description, claims, abstract and drawing—was transmitted to valid/current/reasonably believed to be last known addresses for the non-signing inventor with his refusal to sign/join, the petition was dismissed on 15 June, 2011.

On 18 August, 2011, Petitioner re-advanced his petition with an averment that the previously non-signing co-inventor Mr. Friesacher had signed/joined in the oath/declaration of the application, and in support of this averment, Petitioner filed a copy of the oath/declaration executed by Mr. Friesacher in compliance with 37 C.F.R. §1.63—and so evidencing joinder.

The availability of applications and application papers online to applicants/practitioners who diligently associate their Customer Number with the respective application(s) now provides an applicant/practitioner on-demand information as to events/transactions in an application. Thus, now if one wishes to know the progress in and/or status of an application or the accuracy of the data therein, one need only look at the file online.

Out of an abundance of caution, Petitioners always are reminded that those registered to practice *and* all others who make representations before the Office must inquire into the underlying facts of representations made to the Office and support averments with the appropriate documentation–since all owe to the Office the continuing duty to disclose.[1]

CONCLUSION

The instant petition under 37 C.F.R. §1.47 is **dismissed as moot**.

[1] See supplement of 17 June, 1999. The Patent and Trademark Office is relying on petitioner's duty of candor and good faith and accepting a statement made by Petitioner. See Changes to Patent Practice and Procedure, 62 Fed. Reg. at 53160 and 53178, 1203 Off. Gaz. Pat. Office at 88 and 103 (responses to comments 64 and 109)(applicant obligated under 37 C.F.R. §10.18 to inquire into the underlying facts and circumstances when providing statements to the Patent and Trademark Office). See specifically, the regulations at 37 C.F.R. §10.18.

In view of the joinder of the inventor, further consideration under 37 C.F.R. §1.47 is not necessary. This application does not have any Rule 1.47 status and no such status should appear on the record for this file. This application should not be returned to this Office for any further consideration under 37 C.F.R. §1.47.

The instant application is released to the Office of Patent Application Processing (OPAP) for further processing in due course.

Telephone inquiries regarding this decision may be directed to the undersigned at (571) 272-3214—it is noted, however, that all practice before the Office is in writing (see: 37 C.F.R. §1.2[2]) and the proper authority for action on any matter in this regard are the statutes (35 U.S.C.), regulations (37 C.F.R.) and the commentary on policy (MPEP). Therefore, no telephone discussion may be controlling or considered authority for Petitioner's action(s).

/John J. Gillon, Jr./
John J. Gillon, Jr.
Senior Attorney
Office of Petitions

[2] The regulations at 37 C.F.R. §1.2 provide:

§1.2 Business to be transacted in writing.

All business with the Patent and Trademark Office should be transacted in writing. The personal attendance of applicants or their attorneys or agents at the Patent and Trademark Office is unnecessary. The action of the Patent and Trademark Office will be based exclusively on the written record in the Office. No attention will be paid to any alleged oral promise, stipulation, or understanding in relation to which there is disagreement or doubt.

PTO/SB/20PCT-KR (06-10)
Approved for use through 01/31/2012. OMB 0651-0058
U.S. Patent and Trademark Office; U. S. DEPARTMENT OF COMMERCE
Under the Paperwork Reduction Act of 1995, no persons are required to respond to a collection of information unless it displays a valid OMB control number.

REQUEST FOR PARTICIPATION IN THE PATENT COOPERATION TREATY - PATENT PROSECUTION HIGHWAY (PCT-PPH) PILOT PROGRAM BETWEEN THE KOREAN INTELLECTUAL PROPERTY OFFICE (KIPO) AND THE USPTO

Application No:	12/914,050	Filing date:	October 28, 2010
First Named Inventor:	LUCIA IRENE GONZALEZ		
Title of the Invention:	STEREOISOMER PEPTIDES, LIGAND-TARGETED MULTI- STEREOISOMER PEPTIDE POLYMER CONJUGATES, AND USES THEREOF		

THIS REQUEST FOR PARTICIPATION IN THE PCT-PPH PILOT PROGRAM ALONG WITH THE REQUIRED DOCUMENTS MUST BE SUBMITTED VIA EFS-WEB. INFORMATION REGARDING EFS-WEB IS AVAILABLE AT HTTP://WWW.USPTO.GOV/EBC/EFS_HELP.HTML

APPLICANT HEREBY REQUESTS PARTICIPATION IN THE PCT-PPH PROGRAM AND PETITIONS TO MAKE THE ABOVE-IDENTIFIED APPLICATION SPECIAL UNDER THE PCT-PPH PROGRAM.

The above-identified application is (1) a national stage entry of the corresponding PCT application, or (2) a national stage entry of another PCT application which claims priority to the corresponding PCT application, or (3) a national application that claims domestic/ foreign priority to the corresponding PCT application, or (4) a national application which forms the basis for the priority claim in the corresponding PCT application, or (5) a continuing application of a U.S. application that satisfies one of (1) to (4) above, or (6) a U.S. application that claims domestic benefit to a U.S. provisional application which forms the basis for the priority claim in the corresponding PCT application.

The corresponding PCT application number(s) is/are: PCT/US2010/054583

The international filing date of the corresponding PCT application(s) is/are: October 28, 2010

I. List of Required Documents:

a. **A copy of the latest international work product (WO/ISA, WO/IPEA, or IPER) in the above–identified corresponding PCT application(s)**

☑ Is attached.

☐ Is not attached because the document is already in the U.S. application.

b. **A copy of all claims which were indicated as having novelty, inventive step and industrial applicability in the above-identified corresponding PCT application(s).**

☐ Is attached.

☑ Is not attached because the document is already in the U.S. application.

c. **English translations of the documents in a. and b. above are attached (if the documents are not in the English language). A statement that the English translation is accurate is attached for the document in b. above.**

This collection of information is required by 35 U.S.C. 119, 37 CFR 1.55, and 37 CFR 1.102(d). The information is required to obtain or retain a benefit by the public, which is to file (and by the USPTO to process) an application. Confidentiality is governed by 35 U.S.C. 122 and 37 CFR 1.11 and 1.14. This collection is estimated to take 2 hours to complete, including gathering, preparing, and submitting the completed application form to the USPTO. Time will vary depending upon the individual case. Any comments on the amount of time you require to complete this form and/or suggestions for reducing this burden should be sent to the Chief Information Officer, U.S. Patent and Trademark Office, U.S. Department of Commerce, P.O. Box 1450, Alexandria, VA 22313-1450. DO NOT SEND FEES OR COMPLETED FORMS TO THIS ADDRESS.

Approved for use through 01/31/2012. OMB 0651-0058
U.S.Patent and Trademark Office; U.S. DEPARTMENT OF COMMERCE
Under the Paperwork Reduction Act of 1995, no persons are required to respond to a collection of information unless it displays a valid OMB control number.

REQUEST FOR PARTICIPATION IN THE PCT-PPH PILOT PROGRAM BETWEEN THE KIPO AND THE USPTO

(continued)

Application No.:	12/914,050
First Named Inventor:	Lucia Irene Gonzalez

d. **(1) An information disclosure statement listing the documents cited in the international work products (ISR, WO/ISA, WO/IPEA, IPER) of the corresponding PCT application.**

[✓] Is attached

[ ] Has already been filed in the above-identified U.S. application on _____

(2) Copies of all documents (except) for U.S. patents or U.S. patent application publications)

[✓] Are attached.

[ ] Have already been filed in the above-identified U.S. application on _____

II. Claims Correspondence Table:

Claims in US Application	Patentable Claims in the corresponding PCT Application	Explanation regarding the correspondence
1-19	1-19	The subject matter of claims 1-19 in the present invention is novel and inventive under PCT Art 33(2) and (3)
		The subject matter of claims 1-19 in the present invention seems to be industrially applicable under PCT Art 33(4)

III. All the claims in the US application sufficiently correspond to the patentable claims in the corresponding PCT application.

Signature /Lucia Irene Gonzalez/	Date October 13, 2011
Name (Print/Typed) LUCIA IRENE GONZALEZ	Registration Number 88654

UNITED STATES PATENT AND TRADEMARK OFFICE

Commissioner for Patents
United States Patent and Trademark Office
P.O. Box 1450
Alexandria, VA 22313-1450
www.uspto.gov

MICHAEL BEST & FRIEDRICH LLP
100 E WISCONSIN AVENUE
SUITE 3300
MILWAUKEE WI 53202

MAILED
FEB 10 2011
OFFICE OF PETITIONS
ON PETITION

In re Application of :
Young et al. :
Application No. 12/914,076 :
Filed: October 28, 2010 :
Attorney Docket No. 091393-9280-US01 :

This is a decision on the petition under 37 CFR 1.182, filed, January 6, 2011, to change the name of inventor "James R. Young" to – Randi Jane Young –.

The petition is **DISMISSED**.

The petition under 37 CFR 1.182 to change an inventor's name must include (1) an appropriate petition fee, (2) a statement signed by the inventor setting forth both names and (3) the procedure whereby the change of name was effected, or a copy of the court order.

Petitioner has not complied with item (2) as listed above. As such, the petition under 37 CFR § 1.182 cannot be granted at this time to change the inventor's name.

Further correspondence with respect to this matter should be addressed as follows:

By mail: Mail Stop PETITIONS
Commissioner for Patents
Post Office Box 1450
Alexandria, VA 22313-1450

By hand: Customer Window located at:
U.S. Patent and Trademark Office
Customer Service Window Randolph Building
401 Dulany Street
Alexandria, VA 22314

By fax: (571) 273-8300
ATTN: Office of Petitions

Any questions concerning this matter may be directed to the undersigned at (571) 272-3206.

Liana Walsh
Petitions Examiner
Office of Petitions

UNITED STATES PATENT AND TRADEMARK OFFICE

Commissioner for Patents
United States Patent and Trademark Office
P.O. Box 1450
Alexandria, VA 22313-1450
www.uspto.gov

MICHAEL BEST & FRIEDRICH LLP
100 E WISCONSIN AVENUE
SUITE 3300
MILWAUKEE WI 53202

MAILED
APR 19 2011
OFFICE OF PETITIONS

In re Application of	:	
Young et al.	:	
Application No. 12/914,076	:	ON PETITION
Filed: October 28, 2010	:	
Attorney Docket No. 091393-9280-US01	:	

This is a decision on the renewed petition under 37 C.F.R. § 1.182, filed February 18, 2011, to change the name of an inventor.

The petition is **GRANTED.**

The name will be changed from James R. Young to Randi Jane Young. A Corrected Filing Receipt, reflecting the name change, is enclosed.

This matter is being directed to Technology Center AU 3721 for examination on the merits.

Telephone inquiries regarding this decision should be directed to the undersigned at (571) 272-3206. All other inquiries should be directed to the Technology Center..

Liana Walsh
Petitions Examiner
Office of Petitions

Enclosure: Corrected Filing Receipt

UNITED STATES PATENT AND TRADEMARK OFFICE

UNITED STATES DEPARTMENT OF COMMERCE
United States Patent and Trademark Office
Address: COMMISSIONER FOR PATENTS
P.O. Box 1450
Alexandria, Virginia 22313-1450
www.uspto.gov

APPLICATION NUMBER	FILING or 371(c) DATE	GRP ART UNIT	FIL FEE REC'D	ATTY.DOCKET.NO	TOT CLAIMS	IND CLAIMS
12/914,076	10/28/2010	3721	1090	091393-9280-US01	20	3

CONFIRMATION NO. 5125

CORRECTED FILING RECEIPT

23409
MICHAEL BEST & FRIEDRICH LLP
100 E WISCONSIN AVENUE
Suite 3300
MILWAUKEE, WI 53202

OC000000047222621

Date Mailed: 04/19/2011

Receipt is acknowledged of this non-provisional patent application. The application will be taken up for examination in due course. Applicant will be notified as to the results of the examination. Any correspondence concerning the application must include the following identification information: the U.S. APPLICATION NUMBER, FILING DATE, NAME OF APPLICANT, and TITLE OF INVENTION. Fees transmitted by check or draft are subject to collection. Please verify the accuracy of the data presented on this receipt. **If an error is noted on this Filing Receipt, please submit a written request for a Filing Receipt Correction. Please provide a copy of this Filing Receipt with the changes noted thereon. If you received a "Notice to File Missing Parts" for this application, please submit any corrections to this Filing Receipt with your reply to the Notice. When the USPTO processes the reply to the Notice, the USPTO will generate another Filing Receipt incorporating the requested corrections**

Applicant(s)

Randi Jane Young, Randolph, NJ;
Nathanael S. Murphy, Hellertown, PA;

Assignment For Published Patent Application

INGERSOLL-RAND COMPANY, Montvale, NJ

Power of Attorney: The patent practitioners associated with Customer Number 023409

Domestic Priority data as claimed by applicant

This application is a CON of 12/115,172 05/05/2008 PAT 7,886,840

Foreign Applications (You may be eligible to benefit from the **Patent Prosecution Highway** program at the USPTO. Please see http://www.uspto.gov for more information.)

If Required, Foreign Filing License Granted: 11/05/2010

The country code and number of your priority application, to be used for filing abroad under the Paris Convention, is **US 12/914,076**

Projected Publication Date: Not Applicable

Non-Publication Request: No

Early Publication Request: No

Title

MOTOR ASSEMBLY FOR PNEUMATIC TOOL

Preliminary Class

173

PROTECTING YOUR INVENTION OUTSIDE THE UNITED STATES

Since the rights granted by a U.S. patent extend only throughout the territory of the United States and have no effect in a foreign country, an inventor who wishes patent protection in another country must apply for a patent in a specific country or in regional patent offices. Applicants may wish to consider the filing of an international application under the Patent Cooperation Treaty (PCT). An international (PCT) application generally has the same effect as a regular national patent application in each PCT-member country. The PCT process **simplifies** the filing of patent applications on the same invention in member countries, but **does not result** in a grant of "an international patent" and does not eliminate the need of applicants to file additional documents and fees in countries where patent protection is desired.

Almost every country has its own patent law, and a person desiring a patent in a particular country must make an application for patent in that country in accordance with its particular laws. Since the laws of many countries differ in various respects from the patent law of the United States, applicants are advised to seek guidance from specific foreign countries to ensure that patent rights are not lost prematurely.

Applicants also are advised that in the case of inventions made in the United States, the Director of the USPTO must issue a license before applicants can apply for a patent in a foreign country. The filing of a U.S. patent application serves as a request for a foreign filing license. The application's filing receipt contains further information and guidance as to the status of applicant's license for foreign filing.

Applicants may wish to consult the USPTO booklet, "General Information Concerning Patents" (specifically, the section entitled "Treaties and Foreign Patents") for more information on timeframes and deadlines for filing foreign patent applications. The guide is available either by contacting the USPTO Contact Center at 800-786-9199, or it can be viewed on the USPTO website at http://www.uspto.gov/web/offices/pac/doc/general/index.html.

For information on preventing theft of your intellectual property (patents, trademarks and copyrights), you may wish to consult the U.S. Government website, http://www.stopfakes.gov. Part of a Department of Commerce initiative, this website includes self-help "toolkits" giving innovators guidance on how to protect intellectual property in specific countries such as China, Korea and Mexico. For questions regarding patent enforcement issues, applicants may call the U.S. Government hotline at 1-866-999-HALT (1-866-999-4158).

LICENSE FOR FOREIGN FILING UNDER

Title 35, United States Code, Section 184

Title 37, Code of Federal Regulations, 5.11 & 5.15

GRANTED

The applicant has been granted a license under 35 U.S.C. 184, if the phrase "IF REQUIRED, FOREIGN FILING LICENSE GRANTED" followed by a date appears on this form. Such licenses are issued in all applications where the conditions for issuance of a license have been met, regardless of whether or not a license may be required as

set forth in 37 CFR 5.15. The scope and limitations of this license are set forth in 37 CFR 5.15(a) unless an earlier license has been issued under 37 CFR 5.15(b). The license is subject to revocation upon written notification. The date indicated is the effective date of the license, unless an earlier license of similar scope has been granted under 37 CFR 5.13 or 5.14.

This license is to be retained by the licensee and may be used at any time on or after the effective date thereof unless it is revoked. This license is automatically transferred to any related applications(s) filed under 37 CFR 1.53(d). This license is not retroactive.

The grant of a license does not in any way lessen the responsibility of a licensee for the security of the subject matter as imposed by any Government contract or the provisions of existing laws relating to espionage and the national security or the export of technical data. Licensees should apprise themselves of current regulations especially with respect to certain countries, of other agencies, particularly the Office of Defense Trade Controls, Department of State (with respect to Arms, Munitions and Implements of War (22 CFR 121-128)); the Bureau of Industry and Security, Department of Commerce (15 CFR parts 730-774); the Office of Foreign AssetsControl, Department of Treasury (31 CFR Parts 500+) and the Department of Energy.

NOT GRANTED

No license under 35 U.S.C. 184 has been granted at this time, if the phrase "IF REQUIRED, FOREIGN FILING LICENSE GRANTED" DOES NOT appear on this form. Applicant may still petition for a license under 37 CFR 5.12, if a license is desired before the expiration of 6 months from the filing date of the application. If 6 months has lapsed from the filing date of this application and the licensee has not received any indication of a secrecy order under 35 U.S.C. 181, the licensee may foreign file the application pursuant to 37 CFR 5.15(b).

PTO/SB/20PCT-KR (06-10)
Approved for use through 01/31/2012. OMB 0651-0058
U.S. Patent and Trademark Office; U. S. DEPARTMENT OF COMMERCE
Under the Paperwork Reduction Act of 1995, no persons are required to respond to a collection of information unless it displays a valid OMB control number.

REQUEST FOR PARTICIPATION IN THE PATENT COOPERATION TREATY - PATENT PROSECUTION HIGHWAY (PCT-PPH) PILOT PROGRAM BETWEEN THE KOREAN INTELLECTUAL PROPERTY OFFICE (KIPO) AND THE USPTO

Application No:		Filing date:	10/28/2010
First Named Inventor:	Tad Petrick		
Title of the Invention:	Carrying Case		

THIS REQUEST FOR PARTICIPATION IN THE PCT-PPH PILOT PROGRAM ALONG WITH THE REQUIRED DOCUMENTS MUST BE SUBMITTED VIA EFS-WEB. INFORMATION REGARDING EFS-WEB IS AVAILABLE AT HTTP://WWW.USPTO.GOV/EBC/EFS_HELP.HTML

APPLICANT HEREBY REQUESTS PARTICIPATION IN THE PCT-PPH PROGRAM AND PETITIONS TO MAKE THE ABOVE-IDENTIFIED APPLICATION SPECIAL UNDER THE PCT-PPH PROGRAM.

The above-identified application is (1) a national stage entry of the corresponding PCT application, or (2) a national stage entry of another PCT application which claims priority to the corresponding PCT application, or (3) a national application that claims domestic/ foreign priority to the corresponding PCT application, or (4) a national application which forms the basis for the priority claim in the corresponding PCT application, or (5) a continuing application of a U.S. application that satisfies one of (1) to (4) above, or (6) a U.S. application that claims domestic benefit to a U.S. provisional application which forms the basis for the priority claim in the corresponding PCT application.

The corresponding PCT application number(s) is/are: PCT/US2010/021263

The international date of the corresponding PCT application(s) is/are: January 15, 2010

I. List of Required Documents:

a. **A copy of the latest international work product (WO/ISA, WO/IPEA, or IPER) in the above–identified corresponding PCT application(s)**

- [x] Is attached.
- [ ] Is not attached because the document is already in the U.S. application.

b. **A copy of all claims which were indicated as having novelty, inventive step and industrial applicability in the above-identified corresponding PCT application(s).**

- [x] Is attached.
- [ ] Is not attached because the document is already in the U.S. application.

c. **English translations of the documents in a. and b. above are attached (if the documents are not in the English language). A statement that the English translation is accurate is attached for the document in b. above.**

This collection of information is required by 35 U.S.C. 119, 37 CFR 1.55, and 37 CFR 1.102(d). The information is required to obtain or retain a benefit by the public, which is to file (and by the USPTO to process) an application. Confidentiality is governed by 35 U.S.C. 122 and 37 CFR 1.11 and 1.14. This collection is estimated to take 2 hours to complete, including gathering, preparing, and submitting the completed application form to the USPTO. Time will vary depending upon the individual case. Any comments on the amount of time you require to complete this form and/or suggestions for reducing this burden should be sent to the Chief Information Officer, U.S. Patent and Trademark Office, U.S. Department of Commerce, P.O. Box 1450, Alexandria, VA 22313-1450. DO NOT SEND FEES OR COMPLETED FORMS TO THIS ADDRESS.

Approved for use through 01/31/2012. OMB 0651-0058
U.S.Patent and Trademark Office; U.S. DEPARTMENT OF COMMERCE
Under the Paperwork Reduction Act of 1995, no persons are required to respond to a collection of information unless it displays a valid OMB control number.

REQUEST FOR PARTICIPATION IN THE PCT-PPH PILOT PROGRAM BETWEEN THE KIPO AND THE USPTO

(continued)

Application No.:	
First Named Inventor:	

d. **(1) An information disclosure statement listing the documents cited in the international work products (ISR, WO/ISA, WO/IPEA, IPER) of the corresponding PCT application.**

☒ Is attached

☐ Has already been filed in the above-identified U.S. application on _____

(2) Copies of all documents (except) for U.S. patents or U.S. patent application publications)

☒ Are attached.

Have already been filed in the above-identified U.S. application on _____

II. Claims Correspondence Table:

Claims in US Application	Patentable Claims in the corresponding PCT Application	Explanation regarding the correspondence
1	1	Direct Correspondence - no changes
2	2	Direct Correspondence - no changes
3	3	Direct Correspondence - no changes
4	4	Direct Correspondence - no changes
5	5	Direct Correspondence - no changes
6	6	Direct Correspondence - no changes
7	7	Direct Correspondence - no changes
8	8	Direct Correspondence - no changes
9	9	Direct Correspondence - no changes
10	10	Direct Correspondence - no changes
11	11	Direct Correspondence - no changes
12	12	Direct Correspondence - no changes
13	13	Direct Correspondence - no changes

III. All the claims in the US application sufficiently correspond to the patentable claims in the corresponding PCT application.

Signature	/John C. Gorecki/	Date	10/28/2010
Name (Print/Typed)	John C. Gorecki	Registration Number	38,471

Privacy Act Statement

The **Privacy Act of 1974 (P.L. 93-579)** requires that you be given certain information in connection with your submission of the attached form related to a patent application or patent. Accordingly, pursuant to the requirements of the Act, please be advised that: (1) the general authority for the collection of this information is 35 U.S.C. 2(b)(2); (2) furnishing of the information solicited is voluntary; and (3) the principal purpose for which the information is used by the U.S. Patent and Trademark Office is to process and/or examine your submission related to a patent application or patent. If you do not furnish the requested information, the U.S. Patent and Trademark Office may not be able to process and/or examine your submission, which may result in termination of proceedings or abandonment of the application or expiration of the patent.

The information provided by you in this form will be subject to the following routine uses:

1. The information on this form will be treated confidentially to the extent allowed under the Freedom of Information Act (5 U.S.C. 552) and the Privacy Act (5 U.S.C 552a). Records from this system of records may be disclosed to the Department of Justice to determine whether disclosure of these records is required by the Freedom of Information Act.
2. A record from this system of records may be disclosed, as a routine use, in the course of presenting evidence to a court, magistrate, or administrative tribunal, including disclosures to opposing counsel in the course of settlement negotiations.
3. A record in this system of records may be disclosed, as a routine use, to a Member of Congress submitting a request involving an individual, to whom the record pertains, when the individual has requested assistance from the Member with respect to the subject matter of the record.
4. A record in this system of records may be disclosed, as a routine use, to a contractor of the Agency having need for the information in order to perform a contract. Recipients of information shall be required to comply with the requirements of the Privacy Act of 1974, as amended, pursuant to 5 U.S.C. 552a(m).
5. A record related to an International Application filed under the Patent Cooperation Treaty in this system of records may be disclosed, as a routine use, to the International Bureau of the World Intellectual Property Organization, pursuant to the Patent Cooperation Treaty.
6. A record in this system of records may be disclosed, as a routine use, to another federal agency for purposes of National Security review (35 U.S.C. 181) and for review pursuant to the Atomic Energy Act (42 U.S.C. 218(c)).
7. A record from this system of records may be disclosed, as a routine use, to the Administrator, General Services, or his/her designee, during an inspection of records conducted by GSA as part of that agency's responsibility to recommend improvements in records management practices and programs, under authority of 44 U.S.C. 2904 and 2906. Such disclosure shall be made in accordance with the GSA regulations governing inspection of records for this purpose, and any other relevant (*i.e.*, GSA or Commerce) directive. Such disclosure shall not be used to make determinations about individuals.
8. A record from this system of records may be disclosed, as a routine use, to the public after either publication of the application pursuant to 35 U.S.C. 122(b) or issuance of a patent pursuant to 35 U.S.C. 151. Further, a record may be disclosed, subject to the limitations of 37 CFR 1.14, as a routine use, to the public if the record was filed in an application which became abandoned or in which the proceedings were terminated and which application is referenced by either a published application, an application open to public inspection or an issued patent.
9. A record from this system of records may be disclosed, as a routine use, to a Federal, State, or local law enforcement agency, if the USPTO becomes aware of a violation or potential violation of law or regulation.

UNITED STATES PATENT AND TRADEMARK OFFICE

UNITED STATES DEPARTMENT OF COMMERCE
United States Patent and Trademark Office
Address: COMMISSIONER FOR PATENTS
P.O. Box 1450
Alexandria, Virginia 22313-1450
www.uspto.gov

APPLICATION NO.	FILING DATE	FIRST NAMED INVENTOR	ATTORNEY DOCKET NO.	CONFIRMATION NO.
12/914,077	10/28/2010	Tad Petrick	BI-065US	5126

34645 7590 11/10/2010
Anderson Gorecki & Manaras, LLP
Attn: John C. Gorecki
P.O BOX 553
CARLISLE, MA 01741

EXAMINER

ART UNIT	PAPER NUMBER
3782	

NOTIFICATION DATE	DELIVERY MODE
11/10/2010	ELECTRONIC

Please find below and/or attached an Office communication concerning this application or proceeding.

The time period for reply, if any, is set in the attached communication.

Notice of the Office communication was sent electronically on above-indicated "Notification Date" to the following e-mail address(es):

john@gorecki.us
jgorecki@smmalaw.com
officeadmin@smmalaw.com

UNITED STATES PATENT AND TRADEMARK OFFICE

Commissioner for Patents
United States Patent and Trademark Office
P.O. Box 1450
Alexandria, VA 22313-1450
www.uspto.gov

Anderson Gorecki & Manaras, LLP
Attn: John C. Gorecki
P.O BOX 553
CARLISLE MA 01741

In re Application of	:	
PETRICK, TAD et al	:	DECISION ON REQUEST TO
Application No. 12/914,077	:	PARTICIPATE IN PATENT
Filed: Oct. 28, 2010	:	PCT/PROSECUTION HIGHWAY
Attorney Docket No. BI-065US	:	PROGRAM AND PETITION
Title: CARRYING CASE	:	37 CFR 1.102(d)

This is a decision on the renewed request to participate in the Patent Prosecution Highway (PPH) program and the petition under 37 CFR 1.102(d), filed Oct. 28, 2010, to make the above-identified application special.

The request and petition are granted.

A grantable request to participate in the PPH program and petition to make special require:
(1) The U.S. application must disclose an eligible relationship to one or more PCT applications filed in the KIPO, JPO, EPO or USPTO;
(2) Applicant must submit a copy of the allowable/patentable claim(s) from the PCT application(s) latest international work product (the written opinion or the IPER) along with an English translation thereof and a statement that the English translation is accurate;
(3) All the claims in the U.S. application must sufficiently correspond or be amended to sufficiently correspond to the allowable/patentable claim(s) in the PCT application(s);
(4) Examination of the U.S. application has not begun;
(5) Applicant must submit a copy of the latest international work product from the PCT application containing the allowable/patentable claim(s) along with an English translation thereof and a statement that the English translation is accurate; and
(6) Applicant must submit an IDS listing the documents cited by the PCT examiner in the international work product along with copies of documents except U.S. patents or U.S. patent application publications.
In light of the petition being properly submitted, the request to participate in the PPH program and the petition comply with the above requirements. Accordingly, the above-identified application has been accorded "special" status.

The applicant is encouraged to cite and submit all relevant prior art references, if any, to facilitate examination in this application.

Other inquiries concerning the examination or status of the application should be directed to Nathan Newhouse, the SPE of Art Unit 3782 and 571-272-4544 for Class 224/675 and also accessible in the PAIR system at http://www.uspto.gov/ebc.index.html.

All other inquiries concerning the examination or status of the application should be directed to the Patent Application Information Retrieval (PAIR) system.

This application is currently undergoing pre-examination processing. Once completed, the application will be docketed to an examiner for action on the merits commensurate with this decision.

Telephone inquiries concerning this decision should be directed to Henry C. Yuen, at 571-272-4856.

The petition is **granted.**

/Henry C. Yuen/

Henry C. Yuen, Special Programs Examiner
Technology Center 3700 – Mechanical Engineering,
Manufacturing and Products
571-272-4856

UNITED STATES PATENT AND TRADEMARK OFFICE

UNITED STATES DEPARTMENT OF COMMERCE
United States Patent and Trademark Office
Address: COMMISSIONER FOR PATENTS
P.O. Box 1450
Alexandria, Virginia 22313-1450
www.uspto.gov

APPLICATION NO.	FILING DATE	FIRST NAMED INVENTOR	ATTORNEY DOCKET NO.	CONFIRMATION NO.
12/914,109	10/28/2010	Geoffrey A. VanderPal	011149-000005	5198

30565 7590 05/24/2011
Woodard, Emhardt, Moriarty, McNett & Henry LLP
111 Monument Circle, Suite 3700
Indianapolis, IN 46204-5137

EXAMINER
AKINTOLA, OLABODE

ART UNIT	PAPER NUMBER
3691	

NOTIFICATION DATE	DELIVERY MODE
05/24/2011	ELECTRONIC

Please find below and/or attached an Office communication concerning this application or proceeding.

The time period for reply, if any, is set in the attached communication.

Notice of the Office communication was sent electronically on above-indicated "Notification Date" to the following e-mail address(es):

DocketDept@uspatent.com

UNITED STATES PATENT AND TRADEMARK OFFICE

Commissioner for Patents
United States Patent and Trademark Office
P.O. Box 1450
Alexandria, VA 22313-1450
www.uspto.gov

MAY 23 2011

WOODARD, EMHARDT, MORIARTY, MCNETT & HENRY LLP
111 MONUMENT CIRCLE, SUITE 3700
INDIANAPOLIS IN 46204-5137

In re application of:	:	**DECISION ON PETITION**
VANDERPAL, Geoffrey A.	:	**TO MAKE SPECIAL FOR**
Application No. 12/914,109	:	**NEW APPLICATION**
Filed: October 28, 2010	:	**UNDER 37 CFR 1.102**
For: SYSTEM AND METHOD FOR OPERATING A PRINCIPAL PRESERVATION FUND BASED UPON OPTION COST PER WEEK		

This is a decision on the petition filed on October 28, 2010 to make the above-identified application special for accelerated examination procedure under 37 C.F.R. § 1.102(d).

The petition to make the application special is **DISMISSED**.

REGULATION AND PRACTICE

A grantable petition to make special under 37 C.F.R. § 1.102(d) and pursuant to the "Change to Practice for Petitions in Patent Applications to Make Special and for Accelerated Examination" published in the Federal Register on June 26, 2006 (71 Fed. Reg. 36323), must satisfy the following conditions:

I. Conditions Regarding the Application:

1. the application must be a non-reissue utility or design application filed under 37 CFR 1.111(a);

2. the application, the petition and the required fees must be filed electronically using the USPTO's electronic filing system (EFS), or EFS-web; if not filed electronically, a statement asserting that EFS and EFS-web were not available during the normal business hours.

3. at the time of filing, the application must be complete under 37 CFR 1.51 and in condition for examination;

4. the application must contain three or fewer independent claims and twenty or fewer total claims and the claims must be directed to a single invention.

II. Conditions Regarding the Petition:

The petition must:

1. be filed with the application;

2. include a statement that applicant agrees not to separately argue the patentability of any independent claim during any appeal in the application;

3. include a statement that applicant agrees to make an election without traverse in a telephone interview.

4. include a statement that applicant agrees to conduct such an interview when requested by the examiner.

5. include a statement, made based on a good faith belief, that a preexamination search in compliance with the following requirements, was conducted, including an identification of the field of search by United States class and subclass, where applicable, and for database searches, the search logic or chemical structure or sequence used as a query, the name of the file(s) searched and the database service, and the date of the search.

The preexamination search must:

5.1 involve U.S. patents and patent application publications, foreign patent documents, and non-patent literature, unless the applicant can justify with reasonable certainty that no references more pertinent than those already identified are likely to be found in the eliminated sources and includes such a justification with this statement;

5.2. be directed to the claimed invention and encompass all of the features of the claims, giving the claims the broadest reasonable interpretation;

5.3. encompass the disclosed features that may be claimed.

6. must provide in support of the petition an accelerated examination support document.

An accelerated examination support document must include:

6.1. an information disclosure statement (IDS) in compliance with 37 CFR 1.98 citing each reference deemed most closely related to the subject matter of each of the claims;

6.2. an identification of all the limitations in the claims that are disclosed by the reference specifying where the limitation is disclosed in the cited reference;

6.3. a detailed explanation of how each of the claims is patentable over the references cited with particularity required by 37 CFR 1.111(b) and (c);

6.4. a concise statement of the utility of the invention as defined in each of the independent claims (unless the application is a design application);

6.5. a showing of where each limitation of the claims finds support under 35 USC 112, first paragraph, in the written description of the specification. If applicable, the showing must also identify: (1) each means- (or step) plus-function claim element that invokes consideration under 35 USC 112, sixth paragraph; and (2) the structure, material, or acts in the specification that corresponds to each means- (or step) plus-

function claim element that invokes consideration under 35 USC 112, sixth paragraph; if the application claims the benefit of one or more applications under title 35, United States Code, the showing must also include where each limitation of the claims finds support under 35 USC 112, first paragraph, in each such application in which such supports exists;

6.6. an identification of any cited references that may be disqualified under 35 USC 103(c).

REVIEW OF FACTS

The petition in this case fails to comply with Conditions II.5.1 and II.5.2.

As to Condition II.5.1 and with respect to the "US Field of Search", applicant indicates that "705$" has been searched. If this is intended to indicate a class/subclass search where each document was considered based on classification, note that while a classified search is required, class 705 as a whole currently has over 90,000 documents considering patents and pre-grant publications. If applicant intended this to refer to a text search, this should be recorded under "Database Searches" with any other search logic used to search within class 705 if different from that already listed.

Further regarding Condition II.5.1, it is required that Applicant's search involve U.S. patents and patent application publications, foreign patent documents, and non-patent literature, unless the applicant can justify with reasonable certainty that no references more pertinent than those already identified are likely to be found in the eliminated sources and includes such a justification with this statement. While applicant has searched some non-patent literature, applicant has not provided sufficient coverage of non-patent literature nor provided the above mentioned justification. Applicant is reminded that search templates, specific to each class/subclass, may be found at:
http://www.uspto.gov/web/patents/searchtemplates/.
For example, the instant application is best classified in 705/35. Looking at the available search templates and recommended areas of search for class 705/35, (http://www.uspto.gov/web/patents/searchtemplates/class705-035.htm), a comprehensive list of recommended database files is found for 705/35.

As to Condition II.5.2, the pre-examination search does not sufficiently encompass all of the features of the claims. Initially note that the WEST searches make use of the "adj" operator which searches terms in an ordered proximity. E.g. "principal adj (preserve$ or maint$)" will catch the phrase "principal preserved" but will not catch the phrase "preserve principal" due to the ordered proximity specified. In WEST, the "with" or "same" operators are recommended here. Further, applicant's use of truncation would miss common variations of the term "preserve" as truncated. For example, "preserve$", because of the "e" at the end, would catch "preserve" or "preserved" but would

not catch "preserving", nor "preservation" as found in the preamble of instant claim 1. Finally, the text searches appear to be directed to the goal of the invention, "principal preservation", but do not specifically address what is actually done to achieve the goal, e.g. in claim 1, investing in an interest bearing account; calculating the premium cost per week and proximity to the strike price; selecting and purchasing an option; disposing of the option and investing in a second account.

Further with regard to Condition II.5.2, applicant has indicated certain features in the claims as being allowable over the references submitted. Similar to the discussion with respect to claim 1, the specific features of the dependent claims must also be searched.

Applicant is reminded to update the Support Document in the event of the discovery of relevant art from any new searches.

DECISION

For the above stated reasons, the petition is **DISMISSED**. The application will therefore be taken up by the examiner for action in its regular turn.

Petitioner is given a single opportunity to perfect the petition. Any request for reconsideration of this decision must be submitted within one (1) month or thirty (30) days, whichever is longer, from the date of this decision. No extensions of time will be granted under 37 CFR 1.136(a) if the request is to be considered timely. Any request for reconsideration must address the deficiencies indicated above.

Petitioner is reminded that, upon granting of the special status of the application on request for reconsideration, the application will be processed expeditiously. However, due to the dismissal of the instant petition, examination may not be completed within twelve months of the filing date of the application.

Any inquiry regarding this decision should be directed to Robert Weinhardt, Business Practice Specialist, at (571) 272-6633.

Robert A. Weinhardt,
Business Practice Specialist
Technology Center 3600

RW/5/22/11

UNITED STATES PATENT AND TRADEMARK OFFICE

UNITED STATES DEPARTMENT OF COMMERCE
United States Patent and Trademark Office
Address: COMMISSIONER FOR PATENTS
P.O. Box 1450
Alexandria, Virginia 22313-1450
www.uspto.gov

APPLICATION NO.	FILING DATE	FIRST NAMED INVENTOR	ATTORNEY DOCKET NO.	CONFIRMATION NO.
12/914,109	10/28/2010	Geoffrey A. VanderPal	011149-000005	5198

30565 7590 08/09/2011
Woodard, Emhardt, Moriarty, McNett & Henry LLP
111 Monument Circle, Suite 3700
Indianapolis, IN 46204-5137

EXAMINER
AKINTOLA, OLABODE

ART UNIT	PAPER NUMBER
3691	

NOTIFICATION DATE	DELIVERY MODE
08/09/2011	ELECTRONIC

Please find below and/or attached an Office communication concerning this application or proceeding.

The time period for reply, if any, is set in the attached communication.

Notice of the Office communication was sent electronically on above-indicated "Notification Date" to the following e-mail address(es):

DocketDept@uspatent.com

UNITED STATES PATENT AND TRADEMARK OFFICE

Commissioner for Patents
United States Patent and Trademark Office
P.O. Box 1450
Alexandria, VA 22313-1450
www.uspto.gov

AUG - 8 2011

William A. McKenna
Woodard, Emhardt, Moriaty, McNett and Henry LLP
111 Monument Circle, Suite 3700
Indianapolis, Indiana 46204-3456

In re application of	:	**COMMUNICATION**
Geoffrey A. VanderPal	:	**REGARDING ORDER**
Application No. 12/914,109	:	**OF EXAMINATION**
Filed: 10/28/10	:	

For: SYSTEM AND METHOD FOR OPERATING A PRINCIPAL PRESERVATION FUND BASED UPON OPTION COST PER WEEK

A decision dismissing the petition to make the above-identified application special for accelerated examination was mailed on May 23, 2011. The decision set a non-extendable time period of one month or 30 (thirty) days, whichever is longer, from its mailing date to correct the deficiency/deficiencies in the petition.

As of June 23, 2011, the expiry of the period set, neither a reply nor a renewed petition was received. Accordingly, the application is no longer eligible for the accelerated examination program.

The application will remain in its regular status and will be taken up by the examiner for action in its regular turn.

Petitioner is reminded that a single opportunity to perfect the petition is given. Therefore, further petitions for accelerated examination in this application will not be entertained.

Any inquiry regarding this decision should be directed to Robert Weinhardt, Business Practice Specialist, at (571) 272-6633.

Robert A. Weinhardt
Business Practice Specialist
Technology Center 3600

RW/JM 8/5/11

PTO/SB/20PCT-JP (05-10)
Approved for use through 01/31/2012. OMB 0651-0058
U.S. Patent and Trademark Office; U. S. DEPARTMENT OF COMMERCE

Under the Paperwork Reduction Act of 1995, no persons are required to respond to a collection of information unless it displays a valid OMB control number.

REQUEST FOR PARTICIPATION IN THE PATENT COOPERATION TREATY - PATENT PROSECUTION HIGHWAY (PCT-PPH) PILOT PROGRAM BETWEEN THE JAPAN PATENT OFFICE (JPO) AND THE USPTO

Application No:	12/914,145	Filing date:	October 28, 2010
First Named Inventor:	Shinya Tsuchida		
Title of the Invention:	Video Display System, Video Display Method and Display Apparatus		

THIS REQUEST FOR PARTICIPATION IN THE PCT-PPH PILOT PROGRAM ALONG WITH THE REQUIRED DOCUMENTS MUST BE SUBMITTED VIA EFS-WEB. INFORMATION REGARDING EFS-WEB IS AVAILABLE AT HTTP://WWW.USPTO.GOV/EBC/EFS_HELP.HTML

APPLICANT HEREBY REQUESTS PARTICIPATION IN THE PCT-PPH PROGRAM AND PETITIONS TO MAKE THE ABOVE-IDENTIFIED APPLICATION SPECIAL UNDER THE PCT-PPH PROGRAM.

The above-identified application is (1) a national stage entry of the corresponding PCT application, or (2) a national stage entry of another PCT application which claims priority to the corresponding PCT application, or (3) a national application that claims domestic/ foreign priority to the corresponding PCT application, or (4) a national application which forms the basis for the priority claim in the corresponding PCT application, or (5) a continuing application of a U.S. application that satisfies one of (1) to (4) above, or (6) a U.S. application that claims domestic benefit to a U.S. provisional application which forms the basis for the priority claim in the corresponding PCT application.

The corresponding PCT application number(s) is/are: PCT/JP2009/005436

The international date of the corresponding PCT application(s) is/are: October 19, 2009

I. List of Required Documents:

a. **A copy of the latest international work product (WO/ISA, WO/IPEA, or IPER) in the above-identified corresponding PCT application(s)**

☑ Is attached.

☐ Is not attached because the document is already in the U.S. application.

b. **A copy of all claims which were indicated as having novelty, inventive step and industrial applicability in the above-identified corresponding PCT application(s).**

☑ Is attached.

☐ Is not attached because the document is already in the U.S. application.

c. **English translations of the documents in a. and b. above are attached (if the documents are not in the English language). A statement that the English translation is accurate is attached for the document in b. above.**

This collection of information is required by 35 U.S.C. 119, 37 CFR 1.55, and 37 CFR 1.102(d). The information is required to obtain or retain a benefit by the public, which is to file (and by the USPTO to process) an application. Confidentiality is governed by 35 U.S.C. 122 and 37 CFR 1.11 and 1.14. This collection is estimated to take 2 hours to complete, including gathering, preparing, and submitting the completed application form to the USPTO. Time will vary depending upon the individual case. Any comments on the amount of time you require to complete this form and/or suggestions for reducing this burden should be sent to the Chief Information Officer, U.S. Patent and Trademark Office, U.S. Department of Commerce, P.O. Box 1450, Alexandria, VA 22313-1450. DO NOT SEND FEES OR COMPLETED FORMS TO THIS ADDRESS.

Approved for use through 01/31/2012. OMB 0651-0058
U.S.Patent and Trademark Office; U.S. DEPARTMENT OF COMMERCE

Under the Paperwork Reduction Act of 1995, no persons are required to respond to a collection of information unless it displays a valid OMB control number.

REQUEST FOR PARTICIPATION IN THE PCT-PPH PILOT PROGRAM BETWEEN THE JPO AND THE USPTO

(continued)

Application No.:	12/914,145
First Named Inventor:	Shinya Tsuchida

d. **(1) An information disclosure statement listing the documents cited in the international work products (ISR, WO/ISA, WO/IPEA, IPER) of the corresponding PCT application.**

☐ Is attached

☑ Has already been filed in the above-identified U.S. application on January 25, 2011

(2) Copies of all documents (except) for U.S. patents or U.S. patent application publications)

☐ Are attached.

☑ Have already been filed in the above-identified U.S. application on January 25, 2011

II. Claims Correspondence Table:

Claims in US Application	Patentable Claims in the corresponding PCT Application	Explanation regarding the correspondence
1-29	1-29	Claims 1-29 are submitted to "sufficiently correspond" to claims 1-29,
		respectively, in the corresponding PCT application and/or be dependent claims
		narrower in scope than a claim in the PCT application.
		Each claim has been amended to improve clarity, grammar, and syntax.
		The claims have also been amended to utilize proper claim format and to
		eliminate language informalities.
		Additionally, the claims have been amended to eliminate potential
		means-plus-function claim language and to eliminate multiple
		dependencies.

III. All the claims in the US application sufficiently correspond to the patentable claims in the corresponding PCT application.

Signature			Date 12/13/2011
Name (Print/Typed)	Bruce H. Bernstein	William Pieprz Reg. No. 33,630	Registration Number 29027

Privacy Act Statement

The **Privacy Act of 1974 (P.L. 93-579)** requires that you be given certain information in connection with your submission of the attached form related to a patent application or patent. Accordingly, pursuant to the requirements of the Act, please be advised that: (1) the general authority for the collection of this information is 35 U.S.C. 2(b)(2); (2) furnishing of the information solicited is voluntary; and (3) the principal purpose for which the information is used by the U.S. Patent and Trademark Office is to process and/or examine your submission related to a patent application or patent. If you do not furnish the requested information, the U.S. Patent and Trademark Office may not be able to process and/or examine your submission, which may result in termination of proceedings or abandonment of the application or expiration of the patent.

The information provided by you in this form will be subject to the following routine uses:

1. The information on this form will be treated confidentially to the extent allowed under the Freedom of Information Act (5 U.S.C. 552) and the Privacy Act (5 U.S.C 552a). Records from this system of records may be disclosed to the Department of Justice to determine whether disclosure of these records is required by the Freedom of Information Act.
2. A record from this system of records may be disclosed, as a routine use, in the course of presenting evidence to a court, magistrate, or administrative tribunal, including disclosures to opposing counsel in the course of settlement negotiations.
3. A record in this system of records may be disclosed, as a routine use, to a Member of Congress submitting a request involving an individual, to whom the record pertains, when the individual has requested assistance from the Member with respect to the subject matter of the record.
4. A record in this system of records may be disclosed, as a routine use, to a contractor of the Agency having need for the information in order to perform a contract. Recipients of information shall be required to comply with the requirements of the Privacy Act of 1974, as amended, pursuant to 5 U.S.C. 552a(m).
5. A record related to an International Application filed under the Patent Cooperation Treaty in this system of records may be disclosed, as a routine use, to the International Bureau of the World Intellectual Property Organization, pursuant to the Patent Cooperation Treaty.
6. A record in this system of records may be disclosed, as a routine use, to another federal agency for purposes of National Security review (35 U.S.C. 181) and for review pursuant to the Atomic Energy Act (42 U.S.C. 218(c)).
7. A record from this system of records may be disclosed, as a routine use, to the Administrator, General Services, or his/her designee, during an inspection of records conducted by GSA as part of that agency's responsibility to recommend improvements in records management practices and programs, under authority of 44 U.S.C. 2904 and 2906. Such disclosure shall be made in accordance with the GSA regulations governing inspection of records for this purpose, and any other relevant (*i.e.*, GSA or Commerce) directive. Such disclosure shall not be used to make determinations about individuals.
8. A record from this system of records may be disclosed, as a routine use, to the public after either publication of the application pursuant to 35 U.S.C. 122(b) or issuance of a patent pursuant to 35 U.S.C. 151. Further, a record may be disclosed, subject to the limitations of 37 CFR 1.14, as a routine use, to the public if the record was filed in an application which became abandoned or in which the proceedings were terminated and which application is referenced by either a published application, an application open to public inspection or an issued patent.
9. A record from this system of records may be disclosed, as a routine use, to a Federal, State, or local law enforcement agency, if the USPTO becomes aware of a violation or potential violation of law or regulation.

P38262.A03

IN THE UNITED STATES PATENT AND TRADEMARK OFFICE

Applicant	: Shinya TSUCHIDA	Art Unit	: 2486
Appl. No.	: 12/914,145 (Continuation of PCT/JP2009/005436)	Examiner	: Mehrdad Dastouri
I.A. Filed	: October 19, 2009	Conf. No.	: 5250
For	: VIDEO DISPLAY SYSTEM, VIDEO DISPLAY METHOD AND DISPLAY APPARATUS		

STATEMENT IN SUPPORT OF REQUEST FOR PARTICIPATION IN THE PATENT COOPERATION TREATY - PATENT PROSECUTION HIGHWAY (PCT-PPH) PROGRAM BETWEEN THE JAPAN PATENT OFFICE AND THE USPTO

Commissioner for Patents
U.S. Patent and Trademark Office
Customer Service Window, Mail Stop PPH
Randolph Building
401 Dulany Street
Alexandria VA 22314

Sir:

In support of the concurrently filed Request for Participation in the PCT-PPH Program between the JPO and the USPTO, Applicant brings the following information to the attention of the U.S. Patent and Trademark Office:

1. The present application is a national application claiming foreign/domestic priority to PCT/JP2009/005436. That is, the present application is a continuation of PCT/JP2009/005436.

2. A copy of the latest international work product in PCT/JP2009/005436, and a partial English language translation thereof, are submitted concurrently with this Request. Applicant notes that no observation is described in Box VIII.

3. A copy of the claims in PCT/JP2009/005436 having novelty, an inventive step, and industrial applicability, and a verified English language translation thereof, are submitted concurrently with this Request.

4. Copies of the documents cited in the latest international work product were submitted in an Information Disclosure Statement (IDS) filed on January 25, 2011. Nevertheless, English language Abstracts and machine translations of JP 2000-036969 and JP 2004-165713, which are cited in the latest international work product and which were submitted in the IDS, are submitted concurrently with this Request for the convenience of the Examiner. Applicant notes that a corresponding English language document of JP 2009-232249, which is also cited in the latest international work product and which was also submitted in the IDS, are listed in the IDS.

If there should be any questions concerning this application, the Examiner is invited to contact the undersigned at the telephone number listed below.

Respectfully submitted,
Shinya TSUCHIDA

Bruce H. Bernstein
Reg. No. 29027

William Pieprz
Reg. No. 33,630

December 13, 2011
GREENBLUM & BERNSTEIN, P.L.C.
1950 Roland Clarke Place
Reston, VA 20191
(703) 716-1191

IN THE UNITED STATES PATENT AND TRADEMARK OFFICE

In re Application of

Serial NO.:12/914,145
Filing Date: October 28, 2010
For: VIDEO DISPLAY SYSTEM, VIDEO DISPLAY METHOD AND DISPLAY APPARATUS

VERIFICATION OF TRANSLATION

Honorable Commissioner of Patents and Trademarks
Washington, D.C. 20231

Sir:

Yuko YAMAGAMI, c/o NII Patent Firm, 6F, Tanaka Ito Pia Shin-Osaka Bldg., 3-10, Nishi Nakajima 5-chome, Yodogawa-ku, Osaka-city, Osaka 532-0011, Japan declares:

(1) that she knows well both the Japanese and English languages;
(2) that she translated the claims from PCT/JP2009/005436 from Japanese to English;
(3) that the attached English translation is a true and correct translation of the claims from PCT/JP2009/005436 to the best of her knowledge and belief; and
(4) that all statements made of her own knowledge are true and that all statements made on information and belief are believed to be true, and further that these statements are made with the knowledge that willful false statements and the like are punishable by fine or imprisonment, or both, under 18 U.S.C. 1001, and that such false statements may jeopardize the validity of the application or any patent thereon.

This 6th day of December, 2011

Yuko Yamagami
Yuko YAMAGAMI

[CLAIMS]

[Claim 1] A video display system comprising

a display apparatus; and

a glasses unit with electronic shutters,

wherein said display apparatus includes:

a display unit in which pixel units are arranged in units of lines;

a scanning line drive circuit which supplies a scanning signal for driving the pixel units, to each of the pixel units;

a data line drive circuit which supplies a video signal to each of the pixel units arranged in said display unit;

a first control unit configured to supply, to said data line drive circuit, a video signal of a stereoscopic image of a picture made up of a first frame with which image information for one eye is set and a second frame with which image information for the other eye is set, the image information for one eye and the image information for the other eye corresponding to a same picture of stereoscopic video; and

a first communication unit configured to transmit, to said glasses unit with electronic shutters, a video synchronizing signal which indicates timing of switching between the first frame and the second frame of the picture,

said first control unit is further configured to cause said scanning line drive circuit to supply: a video signal corresponding to a first picture to lines in said display unit from a head line to a final line, and a video signal corresponding to a second picture subsequent to the first picture to the lines in said display unit from the final line to the head line,

said glasses unit with electronic shutters includes:

a shutter for the one eye;

a shutter for the other eye;

a second communication unit configured to receive the video synchronizing signal; and

a second control unit configured to control, according to the video synchronizing signal, opening and closing of one of said shutter for the one eye and said shutter for the other eye, and

said second control unit is configured to control said shutter for

the one eye and said shutter for the other eye so as to provide a shutter closing period in which both of said shutter for the one eye and said shutter for the other eye are closed when switching the opening and closing of said shutter for the one eye and said shutter for the other eye.

[Claim 2] The video display system according to Claim 1, wherein said first control unit is configured to cause said scanning line drive circuit to:

supply a video signal corresponding to the first frame of the first picture to the lines in said display unit from the head line to the final line, and

supply, subsequently, a black signal corresponding to the first frame of the first picture to the lines in said display unit from the head line to the final line for a period of time until said first control unit causes said scanning line drive circuit to supply a video signal corresponding to the second frame of the first picture to the lines in said display unit from the head line to the final line, the second frame of the first picture being subsequent to the first frame of the first picture.

[Claim 3] The video display system according to Claim 2, wherein, when causing said scanning line drive circuit to supply the black signal corresponding to the first frame of the first picture to the lines in said display unit from the head line to the final line, said first control unit is configured to cause said scanning line drive circuit to continuously supply, until the shutter closing period starts, the video signal corresponding to the first frame of the first picture without inserting the black signal corresponding to the first frame of the first picture.

[Claim 4] The video display system according to Claim 3, wherein said first control unit is configured to cause said scanning line drive circuit to simultaneously supply, during the shutter closing period, the black signal corresponding to the first frame of the

first picture to a line into which the black signal corresponding to the first frame of the first picture has not been inserted.

[Claim 5] The video display system according to Claim 1,

wherein said first control unit is configured to cause said scanning line drive circuit to:

supply a video signal corresponding to the second frame of the first picture to the lines in said display unit from the head line to the final line, and

supply, subsequently, a video signal corresponding to the first frame of the second picture to the lines in said display unit from the final line to the head line at a same speed as a speed at which said scanning line drive circuit has been caused to supply the video signal corresponding to the second frame of the first picture.

[Claim 6] The video display system according to Claim 2,

wherein said first control unit is configured to cause said scanning line drive circuit to:

supply the video signal corresponding to the second frame of the first picture to the lines in said display unit from the head line to the final line, and

supply, subsequently, a black signal corresponding to the second frame of the first picture to the lines in said display unit from the head line to the final line for a period of time until said first control unit causes said scanning line drive circuit to supply a video signal corresponding to the first frame of the second picture to the lines in said display unit from the final line to the head line, the first frame of the second picture being subsequent to the second frame of the first picture.

[Claim 7] The video display system according to Claim 6,

wherein, when causing said scanning line drive circuit to supply the black signal corresponding to the second frame of the first picture to the lines in said display unit from the head line to the final line, said first control unit is configured to cause said scanning line drive circuit

to supply the black signal corresponding to the second frame of the first picture:

to the head line that is to be supplied with the black signal corresponding to the second frame of the first picture, for a period of time double a length of the head line that is to be supplied with the black signal corresponding to the second frame of the first picture; and

to the final line that is to be supplied with the black signal corresponding to the second frame of the first picture, for a period of time from when said scanning line drive circuit completes supplying the video signal which corresponds to the second frame of the first picture and which is to be supplied to the final line to when said scanning line drive circuit starts supplying the video signal which corresponds to the first frame of the second picture and which is to be supplied to the final line.

[Claim 8] The video display system according to Claim 6,

wherein the black signal is not supplied to the final line that is to be supplied with the black signal corresponding to the second frame of the first picture, in the case where there is no time interval between when said scanning line drive circuit completes supplying the video signal which corresponds to the second frame of the first picture and which is to be supplied to the final line and when said scanning line drive circuit starts supplying the video signal which corresponds to the first frame of the second picture and which is to be supplied to the final line.

[Claim 9] The video display system according to Claim 6,

wherein, when causing said scanning line drive circuit to supply the black signal corresponding to the second frame of the first picture to the lines in said display unit from the head line to the final line, said first control unit is configured to cause said scanning line drive circuit to continuously supply, until the shutter closing period starts, the video signal corresponding to the second frame of the first picture without inserting the black signal corresponding to the second frame

of the first picture.

[Claim 10] The video display system according to Claim 9,

wherein said first control unit is configured to cause said scanning line drive circuit to simultaneously supply, during the shutter closing period, the black signal corresponding to the second frame of the first picture to a line into which the black signal corresponding to the second frame of the first picture has not been inserted.

[Claim 11] The video display system according to Claim 1,

wherein said first control unit is configured to cause said scanning line drive circuit to:

supply a video signal corresponding to the first frame of the second picture to the lines in said display unit from the final line to the head line, and

supply, subsequently, a black signal corresponding to the first frame of the second picture to the lines in said display unit from the final line to the head line for a period of time until said first control unit causes said scanning line drive circuit to supply a video signal corresponding to the second frame of the second picture to the lines in said display unit from the final line to the head line, the second frame of the second picture being subsequent to the first frame of the second picture.

[Claim 12] The video display system according to Claim 11,

wherein, when causing said scanning line drive circuit to supply the black signal corresponding to the first frame of the second picture to the lines in said display unit from the head line to the final line, said first control unit is configured to cause said scanning line drive circuit to continuously supply, until the shutter closing period starts, the video signal corresponding to the first frame of the second picture without inserting the black signal corresponding to the first frame of the second picture.

[Claim 13] The video display system according to Claim 12,

wherein said first control unit is configured to cause said scanning line drive circuit to simultaneously supply, during the shutter closing period, the black signal corresponding to the first frame of the second picture to the lines from the final line to a predetermined line.

[Claim 14] The video display system according to Claim 1,

wherein said first control unit is configured to segment a screen on which the video is displayed by said display unit into plural screen areas, and to cause said scanning line drive circuit to supply a video signal corresponding to each of the plural screen areas, to each of the plural screen areas resulted from the segmentation.

[Claim 15] The video display system according to Claim 14,

wherein said first control unit is configured to cause said scanning line drive circuit to supply, for a same frame, the video signal corresponding to the each of the plural screen areas in a same line direction, the plural screen areas being resulted from the segmentation.

[Claim 16] The video display system according to Claim 15,

wherein said first control unit is configured to cause said scanning line drive circuit to supply the video signal corresponding to the each of the plural screen areas in the same line direction which is one of a direction from the head line to the final line and a direction from the final line to the head line.

[Claim 17] The video display system according to Claim 14,

wherein said first control unit is configured to cause said scanning line drive circuit to supply, for the same frame, the video signal corresponding to the each of the plural screen areas in a reverse line direction, the plural screen areas being resulted from the segmentation.

[Claim 18] The video display system according to Claim 17,

wherein, when causing said scanning line drive circuit to supply

a video signal corresponding to one of the plural screen areas in the reverse direction that is the direction from the head line to the final line, said first control unit is configured to cause said scanning line drive circuit to supply the video signal corresponding to another one of the plural screen areas in the direction from the final line to the head line.

[Claim 19] The video display system according to Claim 1,

wherein said display apparatus includes an input unit for inputting the video signal from outside.

[Claim 20] The video display system according to Claim 1,

wherein said display apparatus includes:

an input unit for inputting, from outside, an unseparated video signal from which the video signal for the first frame and the video signal for the second frame are not separated yet; and

a signal processing unit configured to generate video signals of the stereoscopic image of the picture made up of the first frame and the second frame by separating the video signal for the first frame and the video signal for the second frame from the unseparated video signal, and to output the generated video signals to said first control unit.

[Claim 21] The video display system according to one of Claims 1 to 20,

wherein the video signal is a signal voltage corresponding to the video signal.

[Claim 22] The video display system according to one of Claims 1 to 21,

wherein each of said pixel units includes a light-emitting element and a drive element which controls driving of said light-emitting element.

[Claim 23] The video display system according to Claim 22,

wherein said drive element controls an electric current supply to said light-emitting element.

[Claim 24] The video display system according to Claim 23,

wherein said light-emitting element is an organic electroluminescence element.

[Claim 25] A video display method used with a display apparatus and a glasses unit with electronic shutters,

wherein the display apparatus includes:

a display unit in which pixel units are arranged in units of lines;

a scanning line drive circuit which supplies a scanning signal for driving the pixel units, to each of the pixel units;

a data line drive circuit which supplies a video signal to each of the pixel units arranged in the display unit;

a first control unit which supplies, to the data line drive circuit, a video signal of a stereoscopic image of a picture made up of a first frame with which image information for one eye is set and a second frame with which image information for the other eye is set, the image information for one eye and the image information for the other eye corresponding to a same picture of stereoscopic video; and

a first communication unit which transmits, to the glasses unit with electronic shutters, a video synchronizing signal which indicates timing of switching between the first frame and the second frame of the picture,

the glasses unit with electronic shutters includes:

a shutter for the one eye;

a shutter for the other eye;

a second communication unit which receives the video synchronizing signal; and

a second control unit which controls, according to the video synchronizing signal, opening and closing of one of the shutter for the one eye and the shutter for the other eye, and

said video display method further comprises:

causing, by the first control unit, the scanning line drive circuit

to supply a video signal corresponding to a first picture to lines in the display unit from a head line to a final line;

causing, by the first control unit, the scanning line drive circuit to supply a video signal corresponding to a second picture subsequent to the first picture to the lines in the display unit from the final line to the head line; and

causing, by the second control unit, both of the shutter for the one eye and the shutter for the other eye to be closed when switching the opening and closing of the shutter for the one eye and the shutter for the other eye.

[Claim 26] A display apparatus comprising:

a display unit in which pixel units are arranged in units of lines;

a scanning line drive circuit which supplies a scanning signal for driving the pixel units, to each of the pixel units;

a data line drive circuit which supplies a video signal to each of the pixel units arranged in said display unit; and

a first control unit configured to supply, to said data line drive circuit, a video signal of a stereoscopic image of a picture made up of a first frame with which image information for one eye is set and a second frame with which image information for the other eye is set, the image information for one eye and the image information for the other eye corresponding to a same picture of stereoscopic video,

wherein said first control unit is further configured to cause said scanning line drive circuit to supply: a video signal corresponding to a first picture to lines in said display unit from a head line to a final line, and a video signal corresponding to a second picture subsequent to the first picture to the lines in said display unit from the final line to the head line.

[Claim 27] The display apparatus according to Claim 26,

wherein each of said pixel units includes a light-emitting element and a drive element which controls driving of said light-emitting element.

[Claim 28] The display apparatus according to Claim 27, wherein said drive element controls an electric current supply to said light-emitting element.

[Claim 29] The display apparatus according to Claim 28, wherein said light-emitting element is an organic electroluminescence element.

請求の範囲

[請求項1]　表示装置と電子シャッター付メガネ部とを含む映像表示システムであって、

前記表示装置は、画素部をライン単位で複数配置した表示部と、

前記画素部を駆動する走査信号を各画素部に供給する走査線駆動回路と、

映像信号を前記表示部に配置された各画素部に供給するデータ線駆動回路と、

立体映像の一画面の一方の眼用の画像情報が設定された第１フレームと前記一画面と同一画面の他方の眼用の画像情報が設定された第２フレームとから前記一画面の立体画像を構成する映像信号を、前記データ線駆動回路に供給する第１制御部と、

前記一画面の第１フレームと第２フレームとの切替えタイミングを示す映像同期信号を前記電子シャッター付メガネ部へ送信する第１通信部と、を具備し、

前記第１制御部は、さらに、前記走査線駆動回路に、

第１の一画面に対応する映像信号を前記表示部の先頭ラインから最終ラインへ供給させ、

前記第１の一画面に後続する第２の一画面に対応する映像信号を前記表示部の最終ラインから先頭ラインへ供給させ、

前記電子シャッター付メガネ部は、

一方の眼用のシャッターと、

他方の眼用のシャッターと、

前記映像同期信号を受信する第２通信部と、

前記映像同期信号に応じて前記一方の眼用のシャッターまたは前記他方の眼用のシャッターの開閉を制御する第２制御部と、を具備し、

前記第２制御部は、前記一方の眼用のシャッターおよび前記他方の眼用のシャッターの開閉を切替えるときに、前記一方の眼用のシャッ

ターおよび前記他方の眼用のシャッターの双方を閉状態とするシャッター遮蔽期間を設けるように、前記一方の眼用のシャッターおよび前記他方の眼用のシャッターを制御する
映像表示システム。

[請求項2]　前記第１制御部は、
前記走査線駆動回路に、第１の一画面の第１フレームに対応する映像信号を前記表示部の先頭ラインから最終ラインへ供給させた後、
前記走査線駆動回路に、前記第１の一画面の第１フレームに後続する第１の一画面の第２フレームに対応する映像信号を前記表示部の先頭ラインから最終ラインへ供給させるまでの間、
前記第１の一画面の第１フレームに対応する黒信号を前記表示部の先頭ラインから最終ラインに供給させる
請求項１記載の映像表示システム。

[請求項3]　前記第１制御部は、
前記第１の一画面の第１フレームに対応する黒信号を前記表示部の先頭ラインから最終ラインに供給させる際、
前記シャッター遮蔽期間までは、前記第１の一画面の第１フレームに対応する黒信号を挿入せずに前記第１の一画面の第１フレームに対応する映像信号を供給し続ける
請求項２記載の映像表示システム。

[請求項4]　前記第１制御部は、前記シャッター遮蔽期間に、
前記第１の一画面の第１フレームに対応する黒信号を挿入しなかったラインについては、前記第１の一画面の第１フレームに対応する黒信号を同時に供給させる
請求項３記載の映像表示システム。

[請求項5]　前記第１制御部は、
前記走査線駆動回路に、前記第１の一画面の第２フレームに対応する映像信号を前記表示部の先頭ラインから最終ラインへ供給させた後

、

前記走査線駆動回路に、前記第１の一画面の第２フレームに対応する映像信号を供給させた速度と同じ速度で前記第２の一画面の第１フレームに対応する映像信号を前記表示部の最終ラインから先頭ラインへ供給させる

請求項１記載の映像表示システム。

[請求項6]　前記第１制御部は、

前記走査線駆動回路に、前記第１の一画面の第２フレームに対応する映像信号を前記表示部の先頭ラインから最終ラインへ供給させた後、

前記走査線駆動回路に、前記第１の一画面の第２フレームに後続する第２の一画面の第１フレームに対応する映像信号を前記表示部の最終ラインから先頭ラインへ供給させるまでの間、

前記第１の一画面の第２フレームに対応する黒信号を前記表示部の先頭ラインから最終ラインに供給させる

請求項２記載の映像表示システム。

[請求項7]　前記第１制御部は、

前記第１の一画面の第２フレームに対応する黒信号を前記表示部の先頭ラインから最終ラインに供給させる際、

前記黒信号の先頭ラインについては、

前記第１の一画面の第２フレームに対応する黒信号の先頭ラインの２倍の期間供給し、

前記黒信号の最終ラインについては、

前記第１の一画面の第２フレームに対応する最終ラインの映像信号を供給し終わってから、前記第２の一画面の第１フレームに対応する最終ラインの映像信号を供給し始めるまでの間、供給する

請求項６記載の映像表示システム。

[請求項8]　前記第１の一画面の第２フレームに対応する最終ラインの映像信号

を供給し終わってから、前記第２の一画面の第１フレームに対応する最終ラインの映像信号を供給し始めるまでの間の時間間隔がない場合、前記黒信号の最終ラインについては、供給しない

請求項６記載の映像表示システム。

[請求項9]　前記第１制御部は、

前記第１の一画面の第２フレームに対応する黒信号を前記表示部の先頭ラインから最終ラインに供給させる際、

前記シャッター遮蔽期間までは、前記第１の一画面の第２フレームに対応する黒信号を挿入せずに前記第１の一画面の第２フレームに対応する映像信号を供給し続ける

請求項６記載の映像表示システム。

[請求項10]　前記第１制御部は、前記シャッター遮蔽期間に、

前記第１の一画面の第２フレームに対応する黒信号を挿入しなかったラインについては、前記第１の一画面の第２フレームに対応する黒信号を同時に供給させる

請求項９記載の映像表示システム。

[請求項11]　前記第１制御部は、

前記走査線駆動回路に、第２の一画面の第１フレームに対応する映像信号を前記表示部の最終ラインから先頭ラインへ供給させた後、

前記走査線駆動回路に、前記第２の一画面の第１フレームに後続する第２の一画面の第２フレームに対応する映像信号を前記表示部の最終ラインから先頭ラインへ供給させるまでの間、

前記第２の一画面の第１フレームに対応する黒信号を前記表示部の最終ラインから先頭ラインに供給させる

請求項１記載の映像表示システム。

[請求項12]　前記第１制御部は、

前記第２の一画面の第１フレームに対応する黒信号を前記表示部の最終ラインから先頭ラインに供給させる際、

前記シャッター遮蔽期間までは、前記第２の一画面の第１フレームに対応する黒信号を挿入せずに前記第２の一画面の第１フレームに対応する映像信号を供給し続ける

請求項１１記載の映像表示システム。

[請求項13]　前記第１制御部は、前記シャッター遮蔽期間に、

前記第２の一画面の第１フレームに対応する黒信号を前記最終ラインから所定のラインに同時に供給させる

請求項１２記載の映像表示システム。

[請求項14]　前記第１制御部は、

前記表示部により表示される画面領域を複数に分割し、

前記分割された画面領域ごとに各画面領域に対応する映像信号を供給させる

請求項１記載の映像表示システム。

[請求項15]　前記第１制御部は、

同一フレームについて、前記分割された画面領域ごとに各画面領域に対応する映像信号を同一のライン方向に供給させる

請求項１４記載の映像表示システム。

[請求項16]　前記第１制御部は、

前記同一のライン方向として、先頭ラインから最終ラインの方向または最終ラインから先頭ラインの方向のいずれかの方向に、各画面領域に対応する映像信号を供給させる

請求項１５記載の映像表示システム。

[請求項17]　前記第１制御部は、

同一フレームについて、前記分割された画面領域ごとに各画面領域に対応する映像信号を、逆のライン方向に供給させる

請求項１４記載の映像表示システム。

[請求項18]　前記第１制御部は、

前記逆のライン方向として、ある画面領域に対応する映像信号を先

頭ラインから最終ラインの方向に供給した場合、他の画面領域に対応する映像信号を最終ラインから先頭ラインの方向に供給する
請求項１７記載の映像表示システム。

[請求項19]　前記表示装置は、
前記映像信号を外部から入力する入力部を備える
請求項１記載の映像表示システム。

[請求項20]　前記表示装置は、
前記第１フレームと前記第２フレームとが未分離の映像信号を外部から入力する入力部と、
前記未分離の映像信号から前記第１フレームと前記第２フレームとを分離して、前記第１フレームと前記第２フレームとから前記一画面の立体画像を構成する映像信号を生成して前記第１制御部に出力する信号処理部と、を設ける
請求項１記載の映像表示システム。

[請求項21]　前記映像信号は、当該映像信号に対応する信号電圧である
請求項１～２０のいずれかに記載の映像表示システム。

[請求項22]　前記画素部は、発光素子と前記発光素子の駆動を制御する駆動素子とを含む
請求項１～２１のいずれかに記載の映像表示システム。

[請求項23]　前記駆動素子は、前記発光素子への電流の供給を制御する
請求項２２記載の映像表示システム。

[請求項24]　前記発光素子は、有機エレクトロルミネセンス素子である
請求項２３記載の映像表示システム。

[請求項25]　表示装置と電子シャッター付メガネ部とを用いて行われる映像表示方法であって、
前記表示装置は、
画素部をライン単位で複数配置した表示部と、
前記画素部を駆動させる走査信号を各画素部に供給する走査線駆動

回路と、

映像信号を前記表示部に配置された各画素部に供給するデータ線駆動回路と、

立体映像の一画面の一方の眼用の画像情報が設定された第１フレームと前記一画面と同一画面の他方の眼用の画像情報が設定された第２フレームとから前記一画面の立体画像を構成する映像信号を、前記データ線駆動回路に供給する第１制御部と、

前記一画面の第１フレームと第２フレームとの切替えタイミングを示す映像同期信号を前記電子シャッター付メガネ部へ送信する第１通信部と、を具備し、

前記電子シャッター付メガネ部は、

一方の眼用のシャッターと、

他方の眼用のシャッターと、

前記映像同期信号を受信する第２通信部と、

前記映像同期信号に応じて前記一方の眼用のシャッターまたは前記他方の眼用のシャッターの開閉を制御する第２制御部と、を具備し、

前記第１制御部が、さらに、前記走査線駆動回路に、

第１の一画面に対応する映像信号を前記表示部の先頭ラインから最終ラインへ供給させるステップと、

前記第１の一画面に後続する第２の一画面に対応する映像信号を前記表示部の最終ラインから先頭ラインへ供給させるステップと、

前記第２制御部が、前記一方の眼用のシャッターおよび前記他方の眼用のシャッターの開閉を切替えるときに、前記一方の眼用のシャッターおよび前記他方の眼用のシャッターの双方を閉状態とするステップと、を含む

映像表示方法。

[請求項26]　画素部をライン単位で複数配置した表示部と、

前記画素部を駆動させる走査信号を各画素部に供給する走査線駆動

回路と、

映像信号を前記表示部に配置された各画素部に供給するデータ線駆動回路と、

立体映像の一画面の一方の眼用の画像情報が設定された第１フレームと前記一画面と同一画面の他方の眼用の画像情報が設定された第２フレームとから前記一画面の立体画像を構成する映像信号を、前記データ線駆動回路に供給する第１制御部と、を具備し、

前記第１制御部は、さらに、前記走査線駆動回路に、

第１の一画面に対応する映像信号を前記表示部の先頭ラインから最終ラインへ供給させ、

前記第１の一画面に後続する第２の一画面に対応する映像信号を前記表示部の最終ラインから先頭ラインへ供給させる

表示装置。

[請求項27]　前記画素部は、発光素子と前記発光素子の駆動を制御する駆動素子とを含む

請求項２６記載の表示装置。

[請求項28]　前記駆動素子は、前記発光素子への電流の供給を制御する

請求項２７記載の表示装置。

[請求項29]　前記発光素子は、有機エレクトロルミネセンス素子である

請求項２８記載の表示装置。

WRITTEN OPINION OF THE INTERNATIONAL SEARCHING AUTHORITY

International application No.
PCT/JP2009/005436

Box No. V Reasoned statement under Rule 43*bis*. 2.1(a)(i) with regard to novelty, inventive step and industrial applicability; citations and explanations supporting such statement

1. Statement

Novelty (N)	Claims	1 - 29	Yes
	Claims		No
Inventive step (IS)	Claims	1 - 29	Yes
	Claims		No
Industrial applicability (IA)	Claims	1 – 29	Yes
	Claims		No

2. Citations and explanations

Document 1: JP2004-165713 A (Media Technology Corp.), 2004. 06. 10, paragraphs [0013]-[0039], FIGS. 1-5

Document 2: JP2009-232249 A (Toshiba Corporation), 2009. 10.08, paragraphs [0033]-[0035], FIG. 8

Document 3: JP2000-036969 A (Japan Broadcasting Corporation) 2000.02.02, paragraphs [0002]–[0013], paragraphs [0018]-[0029], FIGS. 1-6

(1) Claims 1 to 29

The invention as claimed in Claims 1 to 29 is not described in any of the Documents 1 to 3 cited in the International Search Report, nor is the invention obvious to any person skilled in the art over these cited references.

特許協力条約

発信人　日本国特許庁（国際調査機関）

代理人
新居広守
様

あて名
〒532-0011
日本国大阪府大阪市淀川区西中島５丁目３番１０号タナカ・イトーピア新大阪ビル６階
新居国際特許事務所内

10.1.13

PCT

国際調査報告及び国際調査機関の見解書
又は国際調査報告を作成しない旨の決定
の送付の通知書
（法施行規則第41条）
〔ＰＣＴ規則44.1〕

	発送日（日.月.年）　12. 01. 2010
出願人又は代理人の書類記号　P054562P0	今後の手続きについては、下記１及び４を参照。
国際出願番号　ＰＣＴ／ＪＰ２００９／００５４３６	国際出願日（日.月.年）　19. 10. 2009
出願人（氏名又は名称） パナソニック株式会社	

1．☑ 国際調査報告及び国際調査機関の見解書が作成されたこと、及びこの送付書とともに送付することを、出願人に通知する。
ＰＣＴ19条の規定に基づく補正書及び説明書の提出
出願人は、国際出願の請求の範囲を補正することができる（ＰＣＴ規則46参照）。
いつ　補正書の提出期間は、通常国際調査報告の送付の日から２月である。
どこへ　直接次の場所へ　The International Bureau of WIPO
34, chemin des Colombettes
1211 Geneva 20, Switzerland
Facsimile No.: +41 22 338 82 70
詳細な手続については、添付用紙の備考を参照すること。

2．☐ 国際調査報告が作成されないこと、及び法第8条第2項（ＰＣＴ17条(2)(a)）の規定による国際調査報告を作成しない旨の決定及び国際調査機関の見解書をこの送付書とともに送付することを、出願人に通知する。

3．☐ 法施行規則第44条（ＰＣＴ規則40.2）に規定する追加手数料の納付に対する異議の申立てに関して、出願人に下記の点を通知する。
☐ 異議の申立てと当該異議についての決定を、その異議の申し立てと当該異議についての決定の両方を指定官庁へ送付することを求める出願人の請求とともに、国際事務局へ送付した。
☐ 当該異議についての決定は、まだ行われていない。決定されしだい出願人に通知する。

4．今後の手続：　出願人は次の点に注意すること。
優先日から１８月経過後、国際出願は国際事務局によりすみやかに国際公開される。出願人が公開の延期を望むときは、国際出願又は優先権の主張の取下げの通知がＰＣＴ規則90の2.1及び90の2.3にそれぞれ規定されているように、国際公開の事務的な準備が完了する前に国際事務局に到達しなければならない。
いくつかの指定官庁については、出願人が国内段階の開始を優先日から３０月まで（官庁によってはさらに遅くまで）延期することを望むときは、優先日から１９月以内に、国際予備審査の請求書が提出されなければならない。そうでなければ、出願人はそれらの指定官庁に対して優先日から２０月以内に、国内段階の開始のための所定の手続を取らなければならない。
その他の指定官庁については、１９月以内に国際予備審査の請求書が提出されない場合にも、３０月の（あるいはさらに遅い）期限が適用される。
様式PCT/IB/301の付属書類を参照。個々の指定官庁で適用される期限の詳細については、ＰＣＴ出願人の手引、第Ⅱ巻、国内段階およびＷＩＰＯインターネットサイトを参照。

名称及びあて名 日本国特許庁（ＩＳＡ／ＪＰ） 郵便番号１００－８９１５ 東京都千代田区霞が関三丁目４番３号	権限のある職員 特　許　庁　長　官 電話番号　０３－３５８１－１１０１　内線　３５８１	５Ｐ　２９４８

様式ＰＣＴ／ＩＳＡ／２２０　（２００４年１月）　（添付用紙を参照）

注　　意

1．国際調査報告の発送日から起算する条約第19条（1）及び規則46.1に従う国際事務局への補正期間に注意してください。

2．条約22条（2）に規定する期間に注意してください。

3．法律又は契約等の制限により、国際調査報告に記載した非特許文献の写しの一部又は全てが送付されない場合があります。

4．文献の写しの請求について

国際調査報告に記載した文献の複写

特許庁にこれらの引用文献の写しを請求することもできますが、独立行政法人工業所有権情報・研修館（特許庁庁舎２階）で公報類の閲覧・複写および公報以外の文献複写等の取り扱いをしています。

〔担当及び照会先〕

〒１００－００１３　東京都千代田区霞が関３丁目４番３号（特許庁庁舎２階）

独立行政法人工業所有権情報・研修館

【公 報 類】　閲覧部　ＴＥＬ　03－3581－1101　内線3811～2

【公報以外】　資料部　ＴＥＬ　03－3581－1101　内線3831～3

また、（財）日本特許情報機構でも取り扱いをしています。

これらの引用文献の複写を請求する場合は下記の点に注意してください。

〔申込方法〕

（１）特許（実用新案・意匠）公報については、下記の点を明記してください。

○特許・実用新案及び意匠の種類

○出願公告又は出願公開の年次及び番号（又は特許番号、登録番号）

○必要部数

（２）公報以外の文献の場合は、下記の点に注意してください。

○国際調査報告の写しを添付してください（返却します）。

〔申込み及び照会先〕

〒１３５－００１６　東京都江東区東陽４－１－７　佐藤ダイヤビルディング

財団法人　日本特許情報機構　情報業務部業務課

ＴＥＬ　０３－３５０８－２３１３

注意　特許庁に対して文献の写しの請求をすることができる期間は、国際出願日から７年です。

様式ＰＣＴ／ＩＳＡ／２２０の備考

この備考は、ＰＣＴ19条の規定に基づく補正書の提出に関する基本的な指示を与えるためのものである。この備考は特許協力条約並びにこの条約に基づく規則及び実施細則の規定に基づいている。この備考とそれらの規定とが相違する場合には、後者が適用される。詳細な情報については、ＷＩＰＯの出版物であるＰＣＴ出願人の手引も参照すること。

ＰＣＴ19条の規定に基づく補正書の提出に関する指示

出願人は、国際調査報告及び国際調査機関の見解書を受領した後、国際出願の請求の範囲を補正する機会が一回ある。しかし、国際出願のすべての部分（請求の範囲、明細書及び図面）が、国際予備審査の手続においても補正できるもので、例えば出願人が仮保護のために補正書を公開することを希望する場合又は国際公開前に請求の範囲を補正する別の理由がある場合を除き、通常ＰＣＴ19条の規定に基づく補正書を提出する必要はないことを強調しておく。さらに、仮保護は一部の国のみで与えられるだけであることも強調しておく（ＰＣＴ出願人の手引、附録Ｂ１及びＢ２参照）。

補正の対象となるもの

ＰＣＴ19条の規定により請求の範囲のみ補正することができる。
国際段階においてＰＣＴ34条の規定に基づく国際予備審査の手続きにおいて請求の範囲を（更に）補正することができる。
明細書及び図面は、ＰＣＴ34条の規定に基づく国際予備審査の手続においてのみ補正することができる。
国内段階に移行する際、ＰＣＴ28条（又はＰＣＴ41条）の規定により、国際出願のすべての部分を補正することができる。

いつ

国際調査報告の送付の日から２月又は優先日から１６月の内どちらか遅く満了するほうの期間内。しかし、その期間の満了後であっても国際公開の技術的な準備の完了前に国際事務局が補正を受領した場合には、その補正書は、期間内に受理されたものとみなすことを強調しておく（ＰＣＴ規則46.1）。

補正書を提出すべきところ

補正書は、国際事務局のみに提出でき、受理官庁又は国際調査機関には提出してはいけない（ＰＣＴ規則46.2）。
国際予備審査の請求書を提出した／する場合については、以下を参照すること。

どのように

１以上の請求の範囲の削除、１以上の新たな請求の範囲の追加、又は１以上の請求の範囲の記載の補正による。
差替え用紙は、補正の結果、出願当初の用紙と相違する請求の範囲の各用紙毎に提出する。
差替え用紙に記載されているすべての請求の範囲には、アラビア数字を付さなければならない。請求の範囲を削除する場合、その他の請求の範囲の番号を付け直す必要はない。請求の範囲の番号を付け直す場合には、連続番号で付け直さなければならない（ＰＣＴ実施細則第205号(b)）。
補正は国際公開の言語で行う。

補正書にどのような書類を添付しなければならないか

書簡（ＰＣＴ実施細則第205号(b)）

補正書には書簡を添付しなければならない。
書簡は国際出願及び補正された請求の範囲とともに公開されることはない。これを「ＰＣＴ19条(1)に規定する説明書」と混同してはならない（「ＰＣＴ19条(1)に規定する説明書」については、以下を参照）。
書簡は、英語又は仏語を選択しなければならない。ただし、国際出願の言語が英語の場合、書簡は英語で、仏語の場合、書簡は仏語で記載しなければならない。
書簡には、出願時の請求の範囲と補正された請求の範囲との相違について表示しなければならない。特に、国際出願に記載した各請求の範囲との関連で次の表示（２以上の請求の範囲についての同一の表示する場合は、まとめることができる。）をしなければならない。

(i) この請求の範囲は変更しない。
(ii) この請求の範囲は削除する。
(iii) この請求の範囲は追加である。
(iv) この請求の範囲は出願時の１以上の請求の範囲と差し替える。
(v) この請求の範囲は出願時の請求の範囲の分割の結果である。

次に、添付する書簡中での、補正についての説明の例を示す。

１．［請求の範囲の一部の補正によって請求の範囲の項数が４８から５１になった場合］：
“請求の範囲１－２９、３１、３２、３４、３５、３７－４８項は、同じ番号のもとに補正された請求の範囲と置き換えられた。請求の範囲３０、３３及び３６項は変更なし。新たに請求の範囲４９－５１項が追加された。”
２．［請求の範囲の全部の補正によって請求の範囲の項数が１５から１１になった場合］：
“請求の範囲１－１５項は、補正された請求の範囲１－１１項に置き換えられた。”
３．［原請求の範囲の項数が１４で、補正が一部の請求の範囲の削除と新たな請求の範囲の追加を含む場合］：
“請求の範囲１－６及び１４項は変更なし。請求の範囲７－１３は削除。新たに請求の範囲１５、１６及び１７項を追加。”又は
“請求の範囲７－１３は削除。新たに請求の範囲１５、１６及び１７項を追加。その他の全ての請求の範囲は変更なし。”
４．［各種の補正がある場合］：
“請求の範囲１－１０項は変更なし。請求の範囲１１－１３、１８及び１９項は削除。請求の範囲１４、１５及び１６項は補正された請求の範囲１４項に置き換えられた。請求の範囲１７項は補正された請求の範囲１５、１６及び１７項に分割された。新たに請求の範囲２０及び２１項が追加された。”

“ＰＣＴ19条(1)の規定に基づく説明書”（ＰＣＴ規則46.4）

補正書には、補正並びにその補正が明細書及び図面に与える影響についての説明書を提出することができる（明細書及び図面はＰＣＴ19条(1)の規定に基づいては補正できない）。

説明書は、国際出願及び補正された請求の範囲とともに公開される。

説明書は、国際公開の言語で作成しなければならない。

説明書は、簡潔でなければならず、英語の場合又は英語に翻訳した場合に５００語を越えてはならない。

説明書は、出願時の請求の範囲と補正された請求の範囲との相違を示す書簡と混同してはならない。説明書を、その書簡に代えることはできない。説明書は別紙で提出しなければならず、見出しを付すものとし、その見出しは“ＰＣＴ19条(1)の規定に基づく説明書”の語句を用いることが望ましい。

説明書には、国際調査報告又は国際調査報告に列記された文献との関連性に関して、これらを誹謗する意見を記載してはならない。国際調査報告に列記された特定の請求の範囲に関連する文献についての言及は、当該請求の範囲の補正に関してのみ行うことができる。

国際予備審査の請求書が提出されている場合

ＰＣＴ19条の規定に基づく補正書及び添付する説明書の提出の時に国際予備審査の請求書が既に提出されている場合には、出願人は、補正書（及び説明書）を国際事務局に提出すると同時にその写し及び必要な場合、その翻訳文を国際予備審査機関にも提出することが望ましい（ＰＣＴ規則55.3(a)、62.2の第１文を参照）。詳細は国際予備審査請求書（ＰＣＴ／ＩＰＥＡ／４０１）の注意書参照。

国際予備審査の請求がされた場合は、見解書を作成した国際調査機関が国際予備審査機関としては行動しないという特定の場合を除いて、国際調査機関の見解書は国際予備審査機関の見解書とみなされる。この場合、様式ＰＣＴ／ＩＳＡ／２２０の送付日から３月又は優先日から２２月のうちいずれか遅く満了する期限が経過するまでに、出願人は国際予備審査機関に、適当な場合は補正書とともに、答弁書を提出することができる（ＰＣＴ規則43の2.1(c)）。

国内段階に移行するための国際出願の翻訳に関して

国内段階に移行する際、ＰＣＴ19条の規定に基づいて補正された請求の範囲の翻訳を出願時の請求の範囲の翻訳の代わりに又は追加して、指定官庁／選択官庁に提出しなければならないこともあるので、出願人は注意されたい。

指定官庁／選択官庁の詳細な要求については、ＰＣＴ出願人の手引きの第Ⅱ巻を参照。

特許協力条約

PCT

国際調査報告

(法8条、法施行規則第40、41条)
〔PCT18条、PCT規則43、44〕

10.1.13

出願人又は代理人の書類記号 P054562P0	今後の手続きについては、様式PCT／ISA／220及び下記5を参照すること。	
国際出願番号 PCT／JP2009／005436	国際出願日 (日.月.年) 19. 10. 2009	優先日 (日.月.年)
出願人（氏名又は名称） パナソニック株式会社		

国際調査機関が作成したこの国際調査報告を法施行規則第41条（PCT18条）の規定に従い出願人に送付する。
この写しは国際事務局にも送付される。

この国際調査報告は、全部で 3 ページである。

☐ この調査報告に引用された先行技術文献の写しも添付されている。

1．国際調査報告の基礎
a．言語に関し、この国際調査は以下のものに基づき行った。
☑ 出願時の言語による国際出願
☐ 出願時の言語から国際調査のための言語である ＿＿＿＿＿＿ 語に翻訳された、この国際出願の翻訳文（PCT規則12.3(a)及び23.1(b)）

b．☐ この国際調査報告は、PCT規則91の規定により国際調査機関が認めた又は国際調査機関に通知された明らかな誤りの訂正を考慮して作成した（PCT規則43.6の2(a)）。

c．☐ この国際出願は、ヌクレオチド又はアミノ酸配列を含んでいる（第Ⅰ欄参照）。

2．☐ 請求の範囲の一部の調査ができない（第Ⅱ欄参照）。

3．☐ 発明の単一性が欠如している（第Ⅲ欄参照）。

4．発明の名称は ☑ 出願人が提出したものを承認する。
☐ 次に示すように国際調査機関が作成した。

＿＿＿＿＿＿＿＿＿＿＿＿＿＿＿＿

5．要約は ☑ 出願人が提出したものを承認する。
☐ 第Ⅳ欄に示されているように、法施行規則第47条第1項（PCT規則38.2）の規定により国際調査機関が作成した。出願人は、この国際調査報告の発送の日から1月以内にこの国際調査機関に意見を提出することができる。

6．図面に関して
a．要約書とともに公表される図は、
第 9B 図とする。 ☑ 出願人が示したとおりである。
☐ 出願人は図を示さなかったので、国際調査機関が選択した。
☐ 本図は発明の特徴を一層よく表しているので、国際調査機関が選択した。

b．☐ 要約とともに公表される図はない。

国際調査報告

国際出願番号　ＰＣＴ／ＪＰ２００９／００５４３６

Ａ．　発明の属する分野の分類（国際特許分類（ＩＰＣ））

Int.Cl.　H04N13/04(2006.01)i, G02B27/22(2006.01)i, G03B35/16(2006.01)i

Ｂ．　調査を行った分野

調査を行った最小限資料（国際特許分類（ＩＰＣ））

Int.Cl.　H04N13/00-H04N13/04, H04N15/00, G02B27/22, G03B35/16

最小限資料以外の資料で調査を行った分野に含まれるもの

日本国実用新案公報	１９２２－１９９６年
日本国公開実用新案公報	１９７１－２００９年
日本国実用新案登録公報	１９９６－２００９年
日本国登録実用新案公報	１９９４－２００９年

国際調査で使用した電子データベース（データベースの名称、調査に使用した用語）

Ｃ．　関連すると認められる文献

引用文献のカテゴリー＊	引用文献名　及び一部の箇所が関連するときは、その関連する箇所の表示	関連する請求項の番号
A	JP 2004-165713 A(株式会社ﾒﾃﾞｨｱ･ﾃｸﾉﾛｼﾞｰ), 2004.06.10, 段落[0013]-[0039], 図 1-5 (ファミリーなし)	1-29
A	JP 2009-232249 A(株式会社東芝), 2009.10.08, 段落[0033]-[0035], 図 8 (ファミリーなし)	1-29

☑ Ｃ欄の続きにも文献が列挙されている。　☐ パテントファミリーに関する別紙を参照。

＊　引用文献のカテゴリー
「Ａ」特に関連のある文献ではなく、一般的技術水準を示すもの
「Ｅ」国際出願日前の出願または特許であるが、国際出願日以後に公表されたもの
「Ｌ」優先権主張に疑義を提起する文献又は他の文献の発行日若しくは他の特別な理由を確立するために引用する文献（理由を付す）
「Ｏ」口頭による開示、使用、展示等に言及する文献
「Ｐ」国際出願日前で、かつ優先権の主張の基礎となる出願の日の後に公表された文献
「Ｔ」国際出願日又は優先日後に公表された文献であって出願と矛盾するものではなく、発明の原理又は理論の理解のために引用するもの
「Ｘ」特に関連のある文献であって、当該文献のみで発明の新規性又は進歩性がないと考えられるもの
「Ｙ」特に関連のある文献であって、当該文献と他の１以上の文献との、当業者にとって自明である組合せによって進歩性がないと考えられるもの
「&」同一パテントファミリー文献

国際調査を完了した日 ２８．１２．２００９	国際調査報告の発送日 １２．０１．２０１０
国際調査機関の名称及びあて先 日本国特許庁（ＩＳＡ／ＪＰ） 郵便番号１００－８９１５ 東京都千代田区霞が関三丁目４番３号	特許庁審査官（権限のある職員）　５Ｐ　２９４８ 長谷川　素直 電話番号　０３－３５８１－１１０１　内線　３５８１

国際調査報告

国際出願番号　PCT／JP2009／005436

C（続き）．　関連すると認められる文献

引用文献のカテゴリー＊	引用文献名　及び一部の箇所が関連するときは、その関連する箇所の表示	関連する請求項の番号
A	JP 2000-036969 A(日本放送協会), 2000.02.02, 段落[0002]-[0013],[0018]-[0029], 図1-6 (ファミリーなし)	1-29

特許協力条約

発信人　日本国特許庁（国際調査機関）

代理人
新居広守
様

あて名
〒532-0011
日本国大阪府大阪市淀川区西中島５丁目３番１０号
タナカ・イトーピア新大阪ビル６階
新居国際特許事務所内

10.1.13

ＰＣＴ
国際調査機関の見解書
（法施行規則第 40 条の 2）
〔ＰＣＴ規則 43 の 2.1〕

発送日 （日.月.年）	１２．０１．２０１０
出願人又は代理人 の書類記号　P054562P0	今後の手続きについては、下記２を参照すること。

国際出願番号	国際出願日	優先日
ＰＣＴ／ＪＰ２００９／００５４３６	（日.月.年）　１９．１０．２００９	（日.月.年）

国際特許分類（ＩＰＣ）Int.Cl. H04N13/04(2006.01)i, G02B27/22(2006.01)i, G03B35/16(2006.01)i

出願人（氏名又は名称）
パナソニック株式会社

１．この見解書は次の内容を含む。

- ☑ 第Ⅰ欄　見解の基礎
- ☐ 第Ⅱ欄　優先権
- ☐ 第Ⅲ欄　新規性、進歩性又は産業上の利用可能性についての見解の不作成
- ☐ 第Ⅳ欄　発明の単一性の欠如
- ☑ 第Ⅴ欄　ＰＣＴ規則 43 の 2.1(a)(i)に規定する新規性、進歩性又は産業上の利用可能性についての見解、それを裏付けるための文献及び説明
- ☐ 第Ⅵ欄　ある種の引用文献
- ☐ 第Ⅶ欄　国際出願の不備
- ☐ 第Ⅷ欄　国際出願に対する意見

２．今後の手続き
国際予備審査の請求がされた場合は、出願人がこの国際調査機関とは異なる国際予備審査機関を選択し、かつ、その国際予備審査機関がＰＣＴ規則 66.1 の 2(b)の規定に基づいて国際調査機関の見解書を国際予備審査機関の見解書とみなさない旨を国際事務局に通知していた場合を除いて、この見解書は国際予備審査機関の最初の見解書とみなされる。

この見解書が上記のように国際予備審査機関の見解書とみなされる場合、様式ＰＣＴ／ＩＳＡ／２２０を送付した日から３月又は優先日から２２月のうちいずれか遅く満了する期限が経過するまでに、出願人は国際予備審査機関に、適当な場合は補正書とともに、答弁書を提出することができる。

さらなる選択肢は、様式ＰＣＴ／ＩＳＡ／２２０を参照すること。

３．さらなる詳細は、様式ＰＣＴ／ＩＳＡ／２２０の備考を参照すること。

見解書を作成した日
２８．１２．２００９

名称及びあて先 日本国特許庁（ＩＳＡ／ＪＰ） 郵便番号１００－８９１５ 東京都千代田区霞が関三丁目４番３号	特許庁審査官（権限のある職員） 長谷川　素直 電話番号　０３－３５８１－１１０１　内線　３５８１	５Ｐ　２９４８

様式ＰＣＴ／ＩＳＡ／２３７（表紙）（２００７年４月）

国際調査機関の見解書

国際出願番号 PCT／JP2009／005436

第Ⅰ欄 見解の基礎

1．言語に関し、この見解書は以下のものに基づき作成した。

☑ 出願時の言語による国際出願

☐ 出願時の言語から国際調査のための言語である _____ 語に翻訳された、この国際出願の翻訳文（PCT規則12.3(a)及び23.1(b)）

2．☐ この見解書は、PCT規則 91 の規定により国際調査機関が認めた又は国際調査機関に通知された明らかな誤りの訂正を考慮して作成した（PCT規則 43 の 2.1(b)）。

3．この国際出願で開示されたヌクレオチド又はアミノ酸配列に関して、以下に基づき見解書を作成した。

a．タイプ ☐ 配列表

☐ 配列表に関連するテーブル

b．フォーマット ☐ 紙形式

☐ 電子形式

c．提出時期 ☐ 出願時の国際出願に含まれていたもの

☐ この国際出願と共に電子形式により提出されたもの

☐ 出願後に、調査のために、この国際調査機関に提出されたもの

4．☐ さらに、配列表又は配列表に関連するテーブルを提出した場合に、出願後に提出した配列若しくは追加して提出した配列が出願時に提出した配列と同一である旨、又は、出願時の開示を超える事項を含まない旨の陳述書の提出があった。

5．補足意見：

国際調査機関の見解書

国際出願番号 PCT／JP2009／005436

第V欄 新規性、進歩性又は産業上の利用可能性についてのPCT規則43の2.1(a)(i)に定める見解、それを裏付ける文献及び説明

1. 見解

新規性（N）	請求項	1-29	有
	請求項		無
進歩性（IS）	請求項	1-29	有
	請求項		無
産業上の利用可能性（IA）	請求項	1-29	有
	請求項		無

2. 文献及び説明

文献1: JP 2004-165713 A(株式会社ﾒﾃﾞｨｱ･ﾃｸﾉﾛｼﾞｰ), 2004.06.10, 段落[0013]-[0039], 図1-5
文献2: JP 2009-232249 A(株式会社東芝), 2009.10.08, 段落[0033]-[0035], 図8
文献3: JP 2000-036969 A(日本放送協会), 2000.02.02, 段落[0002]-[0013],[0018]-[0029], 図1-6

(1)請求項1-29
請求項1-29に記載された発明は、国際調査報告で引用された上記文献1-3の何れにも記載されておらず、また、これら文献から当業者に自明なものでもない。

UNITED STATES PATENT AND TRADEMARK OFFICE

Commissioner for Patents
United States Patent and Trademark Office
P.O. Box 1450
Alexandria, VA 22313-1450
www.uspto.gov

GREENBLUM & BERNSTEIN, P.L.C.
1950 ROLAND CLARKE PLACE
RESTON VA 20191

MAILED
MAR 27 2012
OFFICE OF PETITIONS

In re Application of
Shinya Tsuchida
Application No.: 12/914,145
Filed: October 28, 2010
Attorney Docket No.: P38262
For: VIDEO DISPLAY SYSTEM, VIDEO DISPLAY METHOD AND DISPLAY APPARATUS

: DECISION ON REQUEST TO
: PARTICIPATE IN THE PATENT
: PROSECUTION HIGHWAY
: PROGRAM AND PETITION
: TO MAKE SPECIAL UNDER
: 37 CFR 1.102(a)

This is a decision on the request to participate in the PCT Patent Prosecution Highway (PCT-PPH) pilot program and the petition under 37 CFR 1.102(a), filed on December 14, 2011, to make the above-identified application special.

The request and petition are **DISMISSED**.

Discussion

A grantable request to participate in the PCT-PPH pilot program and petition to make special require:

(1) The U.S. application must have an eligible relationship to one or more PCT applications where the ISA or IPEA are the JPO, EPO, KIPO, IPAU, Russia, Spain, Finland, Austria, or USPTO;

(2) At least one claim in the PCT application has novelty, inventive step, and industrial applicability and must be free of any observations in Box VIII in the latest work product in the international stage or applicant must identify and explain why the claim(s) is/are not subject to the observation in Box VIII;

(3) Applicant must submit a copy of the claim(s) from the PCT application(s) that have novelty, inventive step, and industrial applicability along with an English translation thereof and a statement that the English translation is accurate, if the claims are not in the English language;

(4) All the claims in the U.S. application must sufficiently correspond or be amended to sufficiently correspond to the claim(s) that have novelty, inventive step, and industrial applicability in the PCT application(s);

(5) Examination of the U.S. application has not begun;

(6) Applicant must submit a copy of the latest international work product from the PCT application indicating that the claim(s) have novelty, inventive step, and industrial applicability along with an English translation thereof.

(7) Applicant must submit an IDS listing the documents cited by the PCT examiner in the international work product along with copies of documents except U.S. patents or U.S. patent application publications.

(8) Applicant is required to submit a claims correspondence table in English which indicates how all the claims in the U.S. application correspond to the claims indicated as having novelty, inventive step and industrial applicability in the latest international work product.

Requirements (1), (3-5), and (7-8) above are considered to have been met. However, the request to participate in the PPH pilot program and petition fail to meet requirements (6) and (2).

Regarding requirement (6), applicant has failed to provide a complete English translation of the Written Opinion (PCT/ISA/237).

Regarding requirement (2), it cannot be determined whether requirement (2) has been met since applicant has failed to provide a complete English translation of the Written Opinion (PCT/ISA/237).

Applicant is given **ONE** opportunity within a time period of **ONE MONTH or THIRTY DAYS**, whichever is longer, from the mailing date of this decision to correct the deficiencies. **NO EXTENSION OF TIME UNDER 37 CFR 1.136 IS PERMITTED.** If the deficiencies are not corrected with the time period given, the application will await action in its regular turn.

Response must be filed via the Electronic Filing System (EFS) using the document description: Petition to make special under PCT – Patent Pros Hwy. Any preliminary amendments and IDS submitted with the PPH documents must be separately indexed as a preliminary amendment and IDS, respectively.

Telephone inquiries concerning this decision should be directed to Irvin Dingle at 571-272-3210.

All other inquiries concerning the examination or status of the application is accessible in the PAIR system at http://www.uspto.gov/ebc/index.html.

David Bucci
Petitions Examiner
Office of Petition

P38262.A04

IN THE UNITED STATES PATENT AND TRADEMARK OFFICE

Applicant	: Shinya TSUCHIDA	Art Unit	: 2486
Appl. No.	: 12/914,145 (Continuation of PCT/JP2009/005436)	Examiner	: Mehrdad Dastouri
I.A. Filed	: October 19, 2009	Conf. No.	: 5250
For	: VIDEO DISPLAY SYSTEM, VIDEO DISPLAY METHOD AND DISPLAY APPARATUS		

RESPONSE TO DECISION ON THE REQUEST TO PARTICIPATE IN THE PCT PATENT PROSECUTION HIGHWAY (PCT-PPH) PILOT PROGRAM AND THE PETITION TO MAKE SPECIAL UNDER 37 CFR 1.102(A)

Commissioner for Patents
U.S. Patent and Trademark Office
Customer Service Window, Mail Stop Petition
Randolph Building
401 Dulany Street
Alexandria VA 22314

Sir:

On March 27, 2012, the U.S. Patent and Trademark Office issued a Decision on Applicant's Request to Participate in the PCT Patent Prosecution Highway (PCT-PPH) Pilot Program and Petition to Make Special under 37 CFR 1.102(a) (hereinafter "Request and Petition"), which was filed on December 14, 2011. The Decision sets forth a one month period for response that expires on April 27, 2012.

The Decision indicates that the Request and Petition fail to meet requirement (6) since a complete English language translation of the Written Opinion (PCT/ISA/237) was not provided, and that it cannot be determined whether requirement (2) has been met since the complete English language translation was not provided. In response, Applicant submits herewith:

- a complete English language translation of the Written Opinion (PCT/ISA/237) in PCT/JP2009/005436.

Thus, Applicant submits that requirement (6) will be met upon entry of the present paper. Moreover, as shown in the complete English language translation, no observation on the international application is shown in Box VIII. Accordingly, it is further submitted that requirement (2) is met.

In view of the above, Applicant submits that all of the requirements for participating in the PCT-PPH Pilot Program have been met, and thus, respectfully requests that the Examiner reconsider and grant Applicant's Request and Petition. Such action is respectfully requested and believed to be appropriate.

While no fee is believed to be due, should the Commissioner determine that any fee is required in order to render this paper timely and/or complete, the Commissioner is authorized to charge any fee to Deposit Account No. 19-0089.

If there should be any questions concerning this application, the Examiner is invited to contact the undersigned at the telephone number listed below.

Respectfully submitted,
Shinya TSUCHIDA
/James P. Bonnamy/
Reg. No. 63,649
James P. Bonnamy

Bruce H. Bernstein
Reg. No. 29027

April 12, 2012
GREENBLUM & BERNSTEIN, P.L.C.
1950 Roland Clarke Place
Reston, VA 20191
(703) 716-1191

Encl: Decision on Request to Participate in the Patent Prosecution Highway Program and Petition to Make Special under 37 CFR 1.102(a) (copy)

Complete English Language Translation of Written Opinion in PCT/JP2009/005436

UNITED STATES PATENT AND TRADEMARK OFFICE

Commissioner for Patents
United States Patent and Trademark Office
P.O. Box 1450
Alexandria, VA 22313-1450
www.uspto.gov

MINTZ, LEVIN, COHN, FERRIS, GLOVSKY & POPEO, P.C.
ONE FINANCIAL CENTER
BOSTON MA 02111

MAILED

JUN 06 2011

OFFICE OF PETITIONS

In re Application of	:	
Sinha, Anand	:	DECISION ON PETITION
Application No. 12/914,203	:	TO WITHDRAW
Filed: October 28, 2010	:	FROM RECORD
Attorney Docket No. 34874-729001US	:	

This is a decision on the Request to Withdraw as attorney or agent of record under 37 C.F.R. § 1.36(b), filed March 22, 2011.

The request is **DISMISSED** as involving a moot issue.

A review of the file record indicates that the power of attorney was revoked by the assignee of the patent application on May 19, 2011. Accordingly, the request to withdraw under 37 C.F.R. § 1.36(b) is moot.

It is noted that the correspondence address of the newly assigned law firm is the same as the previous. As such, no courtesy copy of this decision will be mailed to the new power of attorney.

Telephone inquires concerning this decision should be directed to the undersigned at 571-272-3206. All other inquires concerning either the examination or status of the application should be directed to the Technology Center.

/Liana Walsh/
Liana Walsh
Petitions Examiner
Office of Petitions

UNITED STATES PATENT AND TRADEMARK OFFICE

UNITED STATES DEPARTMENT OF COMMERCE
United States Patent and Trademark Office
Address: COMMISSIONER FOR PATENTS
P.O. Box 1450
Alexandria, Virginia 22313-1450
www.uspto.gov

APPLICATION NO.	FILING DATE	FIRST NAMED INVENTOR	ATTORNEY DOCKET NO.	CONFIRMATION NO.
12/914,296	10/28/2010	Wataru MATSUURA	26887	5523

23389 7590 10/03/2011
SCULLY SCOTT MURPHY & PRESSER, PC
400 GARDEN CITY PLAZA
SUITE 300
GARDEN CITY, NY 11530

EXAMINER

ART UNIT	PAPER NUMBER
3739	

MAIL DATE	DELIVERY MODE
10/03/2011	PAPER

Please find below and/or attached an Office communication concerning this application or proceeding.

The time period for reply, if any, is set in the attached communication.

UNITED STATES PATENT AND TRADEMARK OFFICE

Commissioner for Patents
United States Patent and Trademark Office
P.O. Box 1450
Alexandria, VA 22313-1450
www.uspto.gov

SCULLY SCOTT MURPHY & PRESSER, PC
400 GARDEN CITY PLAZA
SUITE 300
GARDEN CITY NY 11530

In re Application of	:	
MATSUURA, WATARU, et al,	:	DECISION ON REQUEST TO
Application No. 12/914,296	:	PARTICIPATE IN PATENT
Filed: October 28, 2010	:	PCT/PROSECUTION HIGHWAY
Attorney Docket No. 26887	:	PROGRAM AND PETITION
For: MEDICAL SYSTEM	:	TO MAKE SPECIAL UNDER
	:	37 CFR 1.102(a)

This is a decision on the request to participate in the Patent Prosecution Highway (PPH) program and the petition under 37 CFR 1.102(a), filed September 28, 2011 to make the above-identified application special.

The request and petition are granted.

A grantable request to participate in the PPH pilot program and petition to make special require:

(1) The U.S. application must validly claim priority under 35 U.S.C. 119(a) to one or more applications filed in the JPO;
(2) Applicant must submit a copy of the allowable/patentable claim(s) from the JPO/PCT application(s) along with an English translation thereof and a statement that the English translation is accurate;
(3) All the claims in the U.S. application must sufficiently correspond or be amended to sufficiently correspond to the allowable/patentable claim(s) in the JPO application(s);
(4) Examination of the U.S. application has not begun;
(5) Applicant must submit a copy of all the office actions from each of the JPO/PCT application(s) containing the allowable/patentable claim(s) along with an English translation thereof and a statement that the English translation is accurate; and
(6) Applicant must submit an IDS listing the documents cited by the JPO examiner in the JPO office action along with copies of documents except U.S. patents or U.S. patent application publications.
In light of the petition being properly submitted, the request to participate in the PPH program and the petition comply with the above requirements. Accordingly, the above-identified application has been accorded "special" status.

The applicant is encouraged to cite and submit all relevant prior art references, if any, to facilitate examination in this application. Upon completion of pre-examination processing, this application will be forwarded to an examiner for examination.

Telephone inquiries concerning this decision should be directed to Henry C. Yuen at 571-272-4485. All other inquiries concerning the examination or status of the application should be directed to Linda Dvorak, SPE of Art Unit 3739, and 571-272-4764 for Class 600 and also accessible in the PAIR system at http://www.uspto.gov/ebc.index.html.

Petition is **granted**.

/Henry C. Yuen/

Henry C. Yuen, Special Programs Examiner
Technology Center 3700 – Mechanical Engineering,
Manufacturing and Products
571-272-4856

Doc Code: PET.GREEN
Document Description: Petition for Green Tech Pilot

PTO/SB/420 (03-11)

PETITION TO MAKE SPECIAL UNDER THE GREEN TECHNOLOGY PILOT PROGRAM

Attorney Docket Number: 242588-1	Application Number (if known): 12/914,322	Filing date: October 28, 2010

First Named Inventor: Marko BALLER

Title: Method and Apparatus for Sectional Magnetic Encoding of a Shaft and For Measuring Rotational Angle, Rotational Speed and Torque

APPLICANT HEREBY REQUESTS TO PARTICIPATE IN THE GREEN TECHNOLOGY PILOT PROGRAM FOR THE ABOVE-IDENTIFIED APPLICATION. See Instruction Sheet on page 2.

This petition must be timely filed electronically using the USPTO electronic filing system, EFS-Web.

1. By filing this petition:

   Applicant is requesting early publication: Applicant hereby requests early publication under 37 CFR 1.219 and the publication fee set forth in 37 CFR 1.18(d) accompanies this request.

2. By filing this petition: applicant is agreeing to make an election without traverse in a telephonic interview and elect an invention that meets the eligibility requirements for the Green Technology Pilot Program, if the Office determines that the claims are not obviously directed to a single invention. See Instruction Sheet.

3. This request is accompanied by statements of special status for the eligibility requirement.

4. The application contains no more than three (3) independent claims and twenty (20) total claims.

5. The application does not contain any multiple dependent claims.

6. Other attachments: Statement Concerning the Basis for the Special Status

Signature /Allison W. Mages/	Date June 30, 2011
Name (Print/Typed) Allison W. Mages	Registration Number 57,275

Note: Signatures of all the inventors or assignees of record of the entire interest or their representative(s) are required in accordance with 37 CFR 1.33 and 11.18. Please see 37 CFR 1.4(d) for the form of the signature. If necessary, submit multiple forms for more than one signature, see below.*

☐ *Total of _____ forms are submitted.

If you need assistance in completing the form, call 1-800-PTO-9199 and select option 2.

IN THE UNITED STATES PATENT AND TRADEMARK OFFICE

First Named Inventor: Marko BALLER	)
	)
Confirmation No.: 5580	
	)
Serial No.: 12/914,322	)
	)
Filing Date: October 28, 2010	)
	)
Atty Docket No.: 242588-1	)

Commissioner for Patents
P.O. Box 1450
Alexandria, VA 22313-1450

Statement Concerning the Basis for the Special Status

SIR:

Applicant respectfully submits that Special Status is sought on the basis that the present invention materially contributes to the development of renewable energy resources or energy conservation.

The undersigned attorney may be contacted at the number below to facilitate the resolution of any matters. Please charge any fees that are incurred in connection with this Statement to deposit account no. 09-0470.

Respectfully submitted,

General Electric Company

By : /Allison W. Mages/
Allison W. Mages
Reg. No. 57,275

Dated: June 30, 2011
GE Global Patent Operation
2 Corporate Drive, Suite 648
Shelton, CT 06484
203-944-6730

UNITED STATES PATENT AND TRADEMARK OFFICE

UNITED STATES DEPARTMENT OF COMMERCE
United States Patent and Trademark Office
Address: COMMISSIONER FOR PATENTS
P.O. Box 1450
Alexandria, Virginia 22313-1450
www.uspto.gov

APPLICATION NO.	FILING DATE	FIRST NAMED INVENTOR	ATTORNEY DOCKET NO.	CONFIRMATION NO.
12/914,322	10/28/2010	Marko Baller	242588-1	5580

6147 7590 07/29/2011
GENERAL ELECTRIC COMPANY
GLOBAL RESEARCH
ONE RESEARCH CIRCLE
BLDG. K1-3A59
NISKAYUNA, NY 12309

EXAMINER
PHAN, HUY Q

ART UNIT	PAPER NUMBER
2858	

NOTIFICATION DATE	DELIVERY MODE
07/29/2011	ELECTRONIC

Please find below and/or attached an Office communication concerning this application or proceeding.

The time period for reply, if any, is set in the attached communication.

Notice of the Office communication was sent electronically on above-indicated "Notification Date" to the following e-mail address(es):

ldocket@crd.ge.com
wahld@ge.com
haeckl@ge.com

UNITED STATES PATENT AND TRADEMARK OFFICE

Commissioner for Patents
United States Patent and Trademark Office
P.O. Box 1450
Alexandria, VA 22313-1450
www.uspto.gov

GENERAL ELECTRIC COMPANY
GLOBAL RESEARCH
ONE RESEARCH CIRCLE
BLDG. K1-3A59
NISKAYUNA NY 12309

In re Application of	:	
BALLER et al.	:	DECISION ON PETITION
Application No. 12/914,322	:	TO MAKE SPECIAL UNDER
Filed: October 28, 2010	:	THE GREEN TECHNOLOGY
Attorney Docket No. 242588-1	:	PILOT PROGRAM

This is a decision on the petition under 37 CFR 1.102, filed on July 05, 2011, to make the above-identified application special under the pilot program for applications pertaining to Green Technologies as set forth 74 Federal Register Notice 64666 (December 8, 2009) and amended by 75 Federal Register Notice 28554 (May 21, 2010) and 75 Federal Register Notice 69049 (November 10, 2010).

The petition is **GRANTED**.

A grantable petition to make an application special under 37 CFR 1.102 and the pilot program as set forth in 74 FR 64666 must be directed to a nonprovisional application filed under 35 USC 111(a) or be a national stage entry under 35 USC 371, exclusive of any reissue applications.

In order to qualify for special status, the following requirements must be met. 1) The application must have no more than 3 independent claims and no more than 20 total claims. 2) The application must not contain any multiple dependent claims. 3) The petition must state the basis for seeking special status, i.e., the claimed invention either: A) materially enhances the quality of the environment or B) materially contributes to: i) the discovery or development of renewable energy resources, ii) the more efficient utilization and conservation of energy resources, or iii) greenhouse gas emission reduction. 4) If the disclosure is not clear on its face that the claimed invention materially contributes under category (A) or (B), the petition must be accompanied by a statement by the applicant, assignee, or an attorney/agent registered to practice before the Office explaining how the materiality standard is met. 5) A statement that applicant will agree to make an election without traverse in a telephonic interview if a restriction requirement is made by the examiner. 6) The petition to make special must be filed electronically. 7) The petition must be filed at least one day prior to the date that a first Office Action appears in the Patent Application Information Retrieval (PAIR) system. 8) The petition must be accompanied by a request for early publication in compliance with 37 CFR 1.219 and include the publication fee as set forth in 37 CFR 1.18(d).

The requirement for a fee for consideration of the petition to make special for applications pertaining to Green Technologies has been waived.

The instant petition complies with items 1 – 8 above. Accordingly, the above-identified application has been accorded "special" status.

Telephone inquires concerning this decision should be directed to Colleen Dunn at 571-272-1170.

The application is being forwarded to the appropriate Technology Center Art Unit for action on the merits commensurate with this decision.

Colleen Dunn
Quality Assurance Specialist
Technology Center 2800

UNITED STATES PATENT AND TRADEMARK OFFICE

Commissioner for Patents
United States Patent and Trademark Office
P.O. Box 1450
Alexandria, VA 22313-1450
www.uspto.gov

Paper No.

KRAMER LEVIN NAFTALIS &
FRANKEL LLP
INTELLECTUAL PROPERTY
DEPARTMENT
1177 AVENUE OF THE AMERICAS
NEW YORK NY 10036

In re Application of	:	
Dai et al.	:	DECISION ON PETITION
Application No. 12/914,400	:	
Filed: October 28, 2010	:	
Atty Docket No. 56440/1023	:	

This is a decision on the PETITION UNDER 37 C.F.R. §1.137(b) TO REVIVE AN UNINTENTIONALLY ABANDONED APPLICATION filed September 27, 2011, which is properly treated under 37 CFR 1.181.

The petition under § 1.181 is **GRANTED**.

As consideration of the petition under 37 CFR 1.137(b) is unnecessary, the fee for such consideration is being refunded to the Deposit Account, as authorized.

By Notice of Abandonment mailed September 26, 2011, the above-identified application was held abandoned for failure to file a timely and proper reply to the NOTICE TO FILE MISSING PARTS OF NONPROVISIONAL APPLICATION mailed January 31, 2011. This Notice set a two (2) month time limit for reply, with extensions of time obtainable under § 1.136(a). No reply considered filed and no extension of time considered obtained, the courtesy Notice of Abandonment was mailed.

Petitioner states that a response, made timely by an accompanying petition for extension of time within the fifth month, was timely filed electronically on August 31, 2011. In support thereof, petitioner submits a copy of the response

including extension of time as maintained to have been filed on August 31, 2011.

Petitioner's evidence has been reviewed, and is persuasive. However, consideration of their evidence is unnecessary. Their response, including an extension of time, is present in the application with a date of receipt of August 31, 2011. It is further noted that the response as filed was complete as it included the "no new matter statement." (There is a suggestion in the record that this statement was considered missing).

In view thereof, the Notice of Abandonment and the holding of abandonment are hereby **withdrawn**.

No fee is required on petition under § 1.181.

The application is being return to the Office of Patent Application Processing for withdrawal of the holding of abandonment and processing of the response timely filed August 31, 2011 (and resubmitted on petition filed September 27, 2011).

Telephone inquiries specific to this matter should be directed to the undersigned at (571) 272-3219.

Nancy Johnson
Senior Petitions Attorney
Office of Petitions

UNITED STATES PATENT AND TRADEMARK OFFICE

UNITED STATES DEPARTMENT OF COMMERCE
United States Patent and Trademark Office
Address: COMMISSIONER FOR PATENTS
P.O. Box 1450
Alexandria, Virginia 22313-1450
www.uspto.gov

APPLICATION NO.	FILING DATE	FIRST NAMED INVENTOR	ATTORNEY DOCKET NO.	CONFIRMATION NO.
12/914,401	10/28/2010	Zsolt Mathe	MSFT-6710/325986.03	5724

41505 7590 01/03/2011
WOODCOCK WASHBURN LLP (MICROSOFT CORPORATION)
CIRA CENTRE, 12TH FLOOR
2929 ARCH STREET
PHILADELPHIA, PA 19104-2891

EXAMINER
AHMED, SAMIR ANWAR

ART UNIT	PAPER NUMBER
2624	

NOTIFICATION DATE	DELIVERY MODE
01/03/2011	ELECTRONIC

Please find below and/or attached an Office communication concerning this application or proceeding.

The time period for reply, if any, is set in the attached communication.

Notice of the Office communication was sent electronically on above-indicated "Notification Date" to the following e-mail address(es):

eofficemonitor@woodcock.com

UNITED STATES PATENT AND TRADEMARK OFFICE

Commissioner for Patents
United States Patent and Trademark Office
P.O. Box 1450
Alexandria, VA 22313-1450
www.uspto.gov

WOODCOCK WASHBURN LLP (MICROSOFT CORPORATION)
CIRA CENTRE, 12TH FLOOR
2929 ARCH STREET
PHILADELPHIA PA 19104-2891

In re Application of: MATHE, ZSOLT, et al. Serial No.: 12/914,401 Filed: October 28, 2010 Title: **BODY SCAN**	DECISION ON PETITION TO MAKE SPECIAL FOR NEW APPLICATION UNDER 37 C.F.R. § 1.102 & M.P.E.P. § 708.02

This is a decision on the petition filed on October 28, 2010 to make the above-identified application special for accelerated examination procedure under 37 C.F.R. § 1.102(d).

The petition to make the application special is **DENIED**.

REGULATION AND PRACTICE

To be eligible for accelerated examination under 37 C.F.R. § 1.102(d) and pursuant to the "Change to Practice for Petitions in Patent Applications to Make Special and for Accelerated Examination" published in the Federal Register on June 26, 2006 (71 Fed. Reg. 36323), the following conditions must be satisfied:

1. The application must be a non-reissue utility or design application filed under 37 CFR 1.111(a);
2. The application, the petition and the required fees must be filed electronically using the USPTO's electronic filing system (EFS), or EFS-web; if not filed electronically, a statement asserting that EFS and EFS-web were not available during the normal business hours;
3. The application, at the time of filing, must be complete under 37 CFR 1.51 and in condition for examination;
4. The application must contain three or fewer independent claims and twenty or fewer total claims and the claims must be directed to a single invention.

The application as filed is not eligible for accelerated examination under 37 C.F.R. § 1.102(d) because the application, at the time of filing, is not in compliance with item 4.) above.

The application was filed with 23 total claims exceeding the maximum of 20 claims. The application will be taken up by the examiner for action in its regular turn.

Any inquiry regarding this decision should be directed to Ken Wieder, Quality Assurance Specialist, at (571) 272-2986.

Kenneth A. Wieder
Quality Assurance Specialist
Technology Center 2600
Communications

UNITED STATES PATENT AND TRADEMARK OFFICE

Commissioner for Patents
United States Patent and Trademark Office
P.O. Box 1450
Alexandria, VA 22313-1450
www.uspto.gov

DARCELL WALKER
8107 CARVEL LANE
HOUSTON TX 77036

MAILED

OCT 24 2011

OFFICE OF PETITIONS

In re Application of	:	
Rhonda B. SPERO	:	
Application No. 12/914,443	:	DECISION ON PETITION
Filed: October 28, 2010	:	
Attorney Docket No. RBS012010	:	

This is a decision on the petition filed, September 19, 2011, in the above-identified application.

The petition is dismissed.

The rules and statutory provisions governing the operations of the U.S. Patent and Trademark Office require payment of a fee on filing each petition to revive an abandoned application for patent based on unintentional delay or to accept an unintentionally delayed payment of a fee for issuing a patent. In this instance, the fee required by law is $1,860.00. If applicant can qualify as a "small entity" and does so prior to or together with the payment of the fee, the fee will be one-half of the amount indicated. See 37 CFR 1.27.

The petition in the above-identified application was <u>not</u> accompanied by payment of the required fee. No consideration on the merits can be given to the petition until the required fee is received.

Further correspondence with respect to this matter should be addressed as follows:

By mail: Mail Stop PETITIONS
Commissioner for Patents
Post Office Box 1450
Alexandria, VA 22313-1450

By hand: Customer Service Window
Mail Stop Petitions
Randolph Building
401 Dulany Street
Alexandria, VA 22314

By fax: (571) 273-8300
ATTN: Office of Petitions

Any questions concerning this matter may be directed to the undersigned at (571) 272-4231.

Michelle R. Eason
Paralegal Specialist
Office of Petitions

UNITED STATES PATENT AND TRADEMARK OFFICE

Commissioner for Patents
United States Patent and Trademark Office
P.O. Box 1450
Alexandria, VA 22313-1450
www.uspto.gov

DARCELL WALKER
8107 CARVEL LANE
HOUSTON TX 77036

MAILED

FEB 13 2012

OFFICE OF PETITIONS

In re Application of	:	
Rhonda B. SPERO	:	
Application No. 12/914,443	:	DECISION ON PETITION
Filed: October 28, 2010	:	
Attorney Docket No. RBS012010	:	

This is a decision on the renewed petition under the unintentional provisions of 37 CFR 1.137(b), filed January 23, 2012, to revive the above-identified application.

The petition is **GRANTED**.

The application became abandoned for failure to reply in a timely manner to the Notice to File Missing Parts of Nonprovisional Application (Notice), mailed November 12, 2010. The Notice set a period for reply of two (2) months from the mail date of the Notice. A two (2) month extension of time under the provisions of 37 CFR 1.136(a) was obtained. Accordingly, the application became abandoned on March 15, 2011.

The petition satisfies the requirements of 37 CFR 1.137(b) in that petitioner has supplied (1) the reply in the form of the required fees, (2) the petition fee of $930.00, and (3) a proper statement of unintentional delay. Accordingly, the reply to the Notice to File Missing Parts of Nonprovisional Application of November 12, 2010 is accepted as having been unintentionally delayed.

Telephone inquiries concerning this decision should be directed to the undersigned at 571-272-4231.

This application is being referred to the Office of Patent Application Processing.

/Michelle R. Eason/
Michelle R. Eason
Paralegal Specialist
Office of Petitions

UNITED STATES PATENT AND TRADEMARK OFFICE

Commissioner for Patents
United States Patent and Trademark Office
P.O. Box 1450
Alexandria, VA 22313-1450
www.uspto.gov

MAILED
AUG 16 2011
OFFICE OF PETITIONS

SABIC - LNP-CE 08CE
SABIC INNOVATIVE PLASTICS - IP LEGAL
ONE PLASTICS AVENUE
PITTSFIELD MA 01201-3697

In re Application of	:	
Mercx, et al.	:	
Application No. 12/914,497	:	ON PETITION
Filed: October 28, 2010	:	
Attorney Docket No. 09LNP0002-US-NP	:	

This is a decision on the petition to revive under 37 CFR 1.137(b), filed August 3, 2011.

The petition under 37 CFR 1.137(b) is **GRANTED**.

The above-identified application became abandoned for failure to timely file a reply to the Notice to File Missing Parts, mailed November 15, 2010. This Notice set an extendable period for reply of two (2) months for applicants to submit an oath or declaration, together with the surcharge for its late filing. No oath or declaration and surcharge having been received, the application became abandoned on January 16, 2011. The Office mailed a Notice of Abandonment on July 27, 2011.

With the instant petition, applicants paid the petition fee, made the proper statement of unintentional delay, and submitted the required reply in the form of an executed declaration and surcharge.

The application is being forwarded to the Office of Patent Application Processing for pre-examination processing.

Telephone inquiries related to this decision should be directed to the undersigned at (571)272-3207.

Cliff Congo
Petitions Attorney
Office of Petitions

UNITED STATES PATENT AND TRADEMARK OFFICE

COMMISSIONER FOR PATENTS
UNITED STATES PATENT AND TRADEMARK OFFICE
P.O. BOX 1450
ALEXANDRIA, VA 22313-1450
WWW.USPTO.GOV

Paper No.

BIRCH STEWART KOLASCH & BIRCH
PO BOX 747
FALLS CHURCH VA 22040-0747

MAILED
MAR 14 2011
OFFICE OF PETITIONS

In re Application of Saito et al. Application No. 12/914,500 Filed: October 28, 2010 Attorney Docket No. 0042-0623PUS1 Title: SMOKING ARTICLE	DECISION ON PETITION PURSUANT TO 37 C.F.R. § 1.28(c)

This is a notice regarding your submission of January 5, 2011, which is properly treated as a request for acceptance of a fee deficiency submission under 37 C.F.R § 1.28(c). On September 1, 1998, the Court of Appeals for the Federal Circuit held that 37 CFR § 1.28(c) is the sole provision governing the time for correction of the erroneous payment of the issue fee as a small entity. See DH Technology v. Synergystex International, Inc. 154 F.3d 1333, 47 USPQ2d 1865 (Fed. Cir. Sept. 1, 1998).

The Office no longer investigates or rejects original or reissue applications under 37 C.F.R. § 1.56. 1098 Off. Gaz. Pat. Office 502 (January 3, 1989). Therefore, nothing in this notice is intended to imply that an investigation was done.

37 C.F.R. § 1.28(c)(2)(ii) sets forth that the party submitting the deficient payment must include:

(a) Each particular type of fee that was erroneously paid as a small entity, (e.g., basic statutory filing fee, two-month extension of time fee) along with the current fee amount for a non-small entity;
(b) The small entity fee actually paid, and when;
(c) The deficiency owed amount (for each fee erroneously paid); and
(d) The total deficiency payment owed, which is the sum or total of the individual deficiency owed amounts set forth in paragraph (c)(2)(ii)(C) of this section.

Petitioner has identified the total deficiency payment owed.

The deficiency payment in the amount of $628 has been received.

Petitioner has failed to identify the particular type of fees that were erroneously paid as a small entity, when the small entity fees were actually paid, the small entity fees that were actually paid, and the deficiency owed amounts.

As such, this petition under 37 C.F.R § 1.28(c) is **DISMISSED.**

Any reply must be submitted within **TWO (2) MONTHS** from the mail date of this decision. Extensions of time under 37 C.F.R. §1.136(a) are permitted. The reply should include a cover letter entitled "Renewed Petition Under 37 C.F.R. 1.28(c)". This is not a final agency action within the meaning of 5 U.S.C 704.

The renewed petition should indicate in a prominent manner that the attorney handling this matter is Paul Shanoski, and any renewed petition may be submitted by mail[1], hand-delivery[2], or facsimile[3]. Registered users of EFS-Web may alternatively submit a response to this decision via EFS-Web.[4]

Telephone inquiries regarding *this decision* should be directed to the undersigned at (571) 272-3225.[5]

/Paul Shanoski/
Paul Shanoski
Senior Attorney
Office of Petitions

---

1 Mail Stop Petition, Commissioner for Patents, United States Patent and Trademark Office, P.O. Box 1450, Alexandria, VA, 22313-1450.
2 Customer Window, Randolph Building, 401 Dulaney Street, Alexandria, VA, 22314.
3 (571) 273-8300- please note this is a central facsimile number.
4 https://sportal.uspto.gov/authenticate/authenticateuserlocalepf.html
5 Petitioner will note that all practice before the Office should be in writing, and the action of the Office will be based exclusively on the written record in the Office. See 37 C.F.R. §1.2. As such, Petitioner is reminded that no telephone discussion may be controlling or considered authority for Petitioner's further action(s).

UNITED STATES PATENT AND TRADEMARK OFFICE

Commissioner for Patents
United States Patent and Trademark Office
P.O. Box 1450
Alexandria, VA 22313-1450
www.uspto.gov

Paper No.

BIRCH STEWART KOLASCH & BIRCH
PO BOX 747
FALLS CHURCH VA 22040-0747

MAILED

APR 26 2011

OFFICE OF PETITIONS

In re Application of :
Saito et al. :
Application No. 12/914,500 :
Filed: October 28, 2010 :
Attorney Docket No. 0042-0623PUS1 :
Title: SMOKING ARTICLE :

DECISION ON RENEWED PETITION PURSUANT TO 37 C.F.R. § 1.28(c)

This is a notice regarding your submission of March 23, 2011, which is properly treated as a request for acceptance of a fee deficiency submission under 37 C.F.R § 1.28(c). On September 1, 1998, the Court of Appeals for the Federal Circuit held that 37 CFR § 1.28(c) is the sole provision governing the time for correction of the erroneous payment of the issue fee as a small entity. See DH Technology v. Synergystex International, Inc. 154 F.3d 1333, 47 USPQ2d 1865 (Fed. Cir. Sept. 1, 1998).

The Office no longer investigates or rejects original or reissue applications under 37 C.F.R. § 1.56. 1098 Off. Gaz. Pat. Office 502 (January 3, 1989). Therefore, nothing in this notice is intended to imply that an investigation was done.

An original petition pursuant to 37 C.F.R § 1.28(c) was filed on January 5, 2011, along with an identification of the total deficiency payment owed and a deficiency payment in the amount of $628. The original petition was dismissed via the mailing of a decision on March 14, 2011, for failure to identify the particular type of fees that were erroneously paid as a small entity, when the small entity fees were actually paid, the small entity fees that were actually paid, and the deficiency owed amounts.

With this renewed petition, Petitioner has identified the particular type of fees that were erroneously paid as a small

entity, when the small entity fees were actually paid, the small entity fees that were actually paid, and the deficiency owed amounts.

Your fee deficiency submission pursuant to 37 C.F.R. § 1.28(c) is hereby accepted. The petition is **GRANTED** accordingly.

This application is no longer entitled to small entity status. Accordingly, all future fees paid in this application must be paid at the large entity rate.

The Technology Center will be notified of this decision.

Telephone inquiries regarding *this decision* should be directed to the undersigned at (571) 272-3225.[1] All other inquiries concerning examination procedures or status of the application should be directed to the Technology Center.

/Paul Shanoski/
Paul Shanoski
Senior Attorney
Office of Petitions

---

1 Petitioner will note that all practice before the Office should be in writing, and the action of the Office will be based exclusively on the written record in the Office. See 37 C.F.R. § 1.2. As such, Petitioner is reminded that no telephone discussion may be controlling or considered authority for Petitioner's further action(s).

UNITED STATES PATENT AND TRADEMARK OFFICE

Commissioner for Patents
United States Patent and Trademark Office
P.O. Box 1450
Alexandria, VA 22313-1450
www.uspto.gov

DAVID J COLE
E INK CORPORATION
733 CONCORD AVE
CAMBRIDGE MA 02138-1002

MAILED
AUG 30 2011
OFFICE OF PETITIONS

In re Application of :
Holly G. Gates et al. :
Application No. 12/914,504 : ON PETITION
Filed: October 28, 2010 :
Attorney Docket No. **H-496** :

This is a decision on the petition under the unintentional provisions of 37 CFR 1.137(b), filed August 15, 2011, to revive the above-identified application.

There is no indication that the petition is signed by a registered patent attorney or patent agent of record. However, in accordance with 37 CFR 1.34, the signature of David J. Cole appearing on the correspondence shall constitute a representation to the United States Patent and Trademark Office that he is authorized to represent the particular party in whose behalf he acts. If, David J. Cole desires to be acknowledged as the attorney of record in this file, the appropriate power of attorney documents must be submitted.

The application became abandoned for failure to reply in a timely manner to the Notice to File Missing Parts of Nonprovisional Application (Notice), mailed November 12, 2010. The Notice set a period for reply of two (2) months from the mail date of the Notice. A four (4) months extension of time under the provisions of 37 CFR 1.136(a) was obtained. The application became abandoned on May 13, 2010.

The petition is hereby **GRANTED**.

The petition satisfies the requirements of 37 CFR 1.137(b) in that petitioner has supplied (1) the reply in the form of replacement drawings (previously filed on June 18, 2011), Oath or Declaration and surcharge (previously filed on May 9, 2011), (2) the petition fee of $1,620 (3) a proper statement of unintentional delay.

Telephone inquiries concerning this decision should be directed to JoAnne Burke at 571-272-4584.

This application is being referred to the Office of Patent Application Processing.

JoAnne Burke
Petitions Examiner
Office of Petitions

UNITED STATES PATENT AND TRADEMARK OFFICE

Commissioner for Patents
United States Patent and Trademark Office
P.O. Box 1450
Alexandria, VA 22313-1450
www.uspto.gov

Decision Date : September 16,2011

In re Application of :

Walter Presz

Application No : 12914509

Filed : 28-Oct-2010

Attorney Docket No : FDWT 200038US01

DECISION ON REQUEST TO WITHDRAW AS ATTORNEY/AGENTOF RECORD

This is an electronic decision on the Request to Withdraw as attorney or agent of record under 37 CFR § 1.36(b), filed September 16,2011

The request is **APPROVED.**

The request was signed by Richard M. Klein (registration no. 33000) on behalf of all attorneys/agents associated with Customer Number 27885 . All attorneys/agents associated with Cusotmer Number 27885 have been withdrawn.

Since there are no remaining attorneys of record, all future communications from the Office will be directed to the first named inventor or assignee that has properly made itself of record pursuant to 37 CFR 3.71, with correspondence address:

Name	FloDesign Wind Turbine Corp.
Name2	
Address 1	380 Main Street
Address 2	
City	Wilbraham
State	MA
Postal Code	01095
Country	US

As a reminder, requester is required to inform the first named inventor or assignee that has properly made itself of record pursuant to 37 CFR 3.71 of the electronically processed petition.

Telephone inquiries concerning this decision should be directed to the Patent Electronic Business Center (EBC) at 866-217-9197.

Office of Petitions

Doc Code: PET.AUTO **Document Description: Petition automatically granted by EFS-Web**	PTO/SB/83 U.S. Patent and Trademark Office Department of Commerce

Electronic Petition Request	**REQUEST FOR WITHDRAWAL AS ATTORNEY OR AGENT AND CHANGE OF CORRESPONDENCE ADDRESS**
Application Number	12914509
Filing Date	28-Oct-2010
First Named Inventor	Walter Presz
Art Unit	3745
Examiner Name	
Attorney Docket Number	FDWT 200038US01
Title	SHROUDED WIND TURBINE WITH SCALLOPED LOBES

◉ Please withdraw me as attorney or agent for the above identified patent application and the practitioners of record associated with Customer Number: 27885

The reason(s) for this request are those described in 37 CFR:

10.40(c)(5)

Certifications

☒ I/We have given reasonable notice to the client, prior to the expiration of the response period, that the practitioner(s) intend to withdraw from employment

☒ I/We have delivered to the client or a duly authorized representative of the client all papers and property (including funds) to which the client is entitled

☒ I/We have notified the client of any responses that may be due and the time frame within which the client must respond

Change the correspondence address and direct all future correspondence to the first named inventor or assignee that has properly made itself of record pursuant to 37 CFR 3.71:

Name	FloDesign Wind Turbine Corp.
Address	380 Main Street
City	Wilbraham
State	MA
Postal Code	01095
Country	US

I am authorized to sign on behalf of myself and all withdrawing practitioners.	
Signature	/ Richard M. Klein /
Name	Richard M. Klein
Registration Number	33000

UNITED STATES PATENT AND TRADEMARK OFFICE

UNITED STATES DEPARTMENT OF COMMERCE
United States Patent and Trademark Office
Address: COMMISSIONER FOR PATENTS
P.O. Box 1450
Alexandria, Virginia 22313-1450
www.uspto.gov

APPLICATION NO.	FILING DATE	FIRST NAMED INVENTOR	ATTORNEY DOCKET NO.	CONFIRMATION NO.
12/914,510	10/28/2010	John A. Taylor	050290 014P2	5924

33805 7590 01/13/2011
WEGMAN, HESSLER & VANDERBURG
6055 ROCKSIDE WOODS BOULEVARD
SUITE 200
CLEVELAND, OH 44131

EXAMINER

ART UNIT	PAPER NUMBER
1786	

MAIL DATE	DELIVERY MODE
01/13/2011	PAPER

Please find below and/or attached an Office communication concerning this application or proceeding.

The time period for reply, if any, is set in the attached communication.

UNITED STATES PATENT AND TRADEMARK OFFICE

Commissioner for Patents
United States Patent and Trademark Office
P.O. Box 1450
Alexandria, VA 22313-1450
www.uspto.gov

JAN 13 2011

CST

In re application of John A. Taylor et al Serial No. 12/914,510 Filed: October 28, 2010 For: PROTECTIVE GARMENTS AND MATERIALS THEREFOR	: : : : : :	DECISION ON REQUEST TO PARTICIPATE IN PATENT PROSECUTION HIGHWAY PILOT PROGRAM AND PETITION TO MAKE SPECIAL UNDER 37 CFR 1.102(a)

This is a decision on the request to participate in the Patent Prosecution Highway (PPH) program filed October 29, 2010.

The request and petition are **DISMISSED**.

A grantable request to participate in the PPH program and petition to make special require:

(1) The U.S. application must validly claim priority under 35 U.S.C. 119(a) to one or more applications filed in the UK IPO, note where the UK IPO application with similar claims is not the same application from which the U.S. application claims priority that the applicant must identify the relationship between the UK IPO application with similar claims and the UK IPO priority application;

(2) Applicant must submit a copy of the allowable/patentable claim(s) from the UK IPO application(s);

(3) Applicant must ensure that all the claims in the U.S. application must sufficiently correspond or be amended to sufficiently correspond to the allowable/patentable claim(s) in the UK IPO application(s);

(4) Examination of the U.S. application has not begun;

(5) Applicant must submit a copy of all the office action from each of the UK IPO application(s) containing the allowable claims that are the basis for the request; and

(6) Applicant must submit:

a. An IDS listing the documents cited by the UK IPO examiner in the UK IPO office action (unless already submitted in this application) and
b. Copies of documents except U.S. patents or U.S. patent application publications (unless already submitted in this application).

The request to participate in the PPH program and petition fail because:

(3) Applicant must ensure that all the claims in the U.S. application must sufficiently correspond or be amended to sufficiently correspond to the allowable/patentable claim(s) in the UK IPO application(s).

Claim 1 of the present application does not appear to sufficiently correspond to patented claim 1 of the UK patent because claim 1 of the present application does not require that the polymeric material be "foamed", whereas claim 1 of the UK patent requires "coagulating at least some of the foamed polymeric material".

Other instances where the claims of the present application do not appear to sufficiently correspond to the patented claims of the UK patent include:

- Claim 9 of the UK patent requires a second polymeric layer "covering" the composite layer, whereas claim 9 of the present application requires that the second polymeric layer is provided "over" the composite layer. Similarly, note claim 10.

- Claim 15 of the UK patent is dependent on any of claims 8 to 14 and sets forth the thickness of the "lining", whereas claim 15 of the present application depends on claim 7 and sets forth the thickness of the "substrate".

(5) Applicant must submit a copy of all the office action from each of the UK IPO application(s) containing the allowable claims that are the basis for the request.

While applicant has provided a copy of a search report, it does not appear that applicant has provided a copy of the notification of grant.

Applicant is given a time period of **ONE MONTH OR THIRTY DAYS**, whichever is longer, from the mailing date of this decision to correct the deficiencies. **NO EXTENSION OF TIME UNDER 37 CFR 1.136 IS PERMITTED.** If the deficiencies are not corrected within the time period given, the application with await action in its regular turn.

Application No. 12/914,510

Any inquiry regarding this decision should be directed to Christine Tierney, Quality Assurance Specialist, at (571) 272-1055.

All other inquiries concerning the examination or status of the application is accessible in the PAIR system at http://www.uspto.gov/ebc/index.html.

/Christine Tierney/

Christine Tierney
Quality Assurance Specialist
Technology Center 1700

IN THE UNITED STATES PATENT AND TRADEMARK OFFICE

First Named Inventor: Adnan Bohori	)
Confirmation No.: 5926	)
	)
Serial No.: 12/914512	)
	)
Filing Date: 10-28-10	)
	)
Atty Docket No.: 242469-1	)

Commissioner for Patents
P.O. Box 1450
Alexandria, VA 22313-1450

Statement Concerning the Basis for the Special Status

SIR:

Applicant respectfully submits that Special Status is sought on the basis that the present invention materially contributes to the development of renewable energy resources or energy conservation.

Applicant respectfully submits that the present invention is directed to systems for contactless power transfer between components wherein at least one of the components is rotating, for example in a wind turbine. The various embodiments of the contactless power transfer system described in the present application include a power source, a first coil, a field focusing element and a second and enable transfer of power via a contactless medium from the first coil to the second coil. The contactless power transfer system enables efficient contactless power transfer between a stationary component and a rotatory component, for example. The contactless power transfer system also maintains the efficiency in case of any deviation in the air gap between the first coil and the second coil. This provides minimum maintenance and higher range of operation

to the contactless power system. Thus the present invention materially contributes to the development of renewable energy by reducing the need for wind turbine maintenance and improving wind turbine operation, which in turn promotes increased energy production.

The undersigned attorney may be contacted at the number below to facilitate the resolution of any matters. Please charge any fees that are incurred in connection with this Statement to deposit account no. 09-0470.

Respectfully submitted,

General Electric Company

By : /Douglas D. Zhang/
Douglas D. Zhang
Reg. No. 37,985

Dated: January 7, 2011

GE Global Patent Operation
2 Corporate Drive, Suite 648
Shelton, CT 06484
203-944-6755

Doc Code: PET.GREEN
Document Description: Petition for Green Tech Pilot

PTO/SB/420 (11-10)
Approved for use through 01/31/2011. OMB 0651-0062
U.S. Patent and Trademark Office; U. S. DEPARTMENT OF COMMERCE
Under the Paperwork Reduction Act of 1995, no persons are required to respond to a collection of information unless it displays a valid OMB control number.

PETITION TO MAKE SPECIAL UNDER THE GREEN TECHNOLOGY PILOT PROGRAM

Attorney Docket Number: 242469-1	Application Number (if known): 12/914512	Filing date: 10-28-10
First Named Inventor: Adnan Bohori		
Title: SYSTEMS FOR CONTACTLESS POWER TRANSFER		

APPLICANT HEREBY REQUESTS TO PARTICIPATE IN THE GREEN TECHNOLOGY PILOT PROGRAM FOR THE ABOVE-IDENTIFIED APPLICATION. See Instruction Sheet on page 2.

This petition must be timely filed electronically using the USPTO electronic filing system, EFS-Web.

1. By filing this petition:

   Applicant is requesting early publication: Applicant hereby requests early publication under 37 CFR 1.219 and the publication fee set forth in 37 CFR 1.18(d) accompanies this request.

2. By filing this petition: applicant is agreeing to make an election without traverse in a telephonic interview and elect an invention that meets the eligibility requirements for the Green Technology Pilot Program, if the Office determines that the claims are not obviously directed to a single invention. See Instruction Sheet.

3. This request is accompanied by statements of special status for the eligibility requirement.

4. The application contains no more than three (3) independent claims and twenty (20) total claims.

5. The application does not contain any multiple dependent claims.

6. Other attachments: Statement Concerning the Basis for the Special Status

Signature /Douglas D. Zhang/	Date 1-7-2011
Name (Print/Typed) Douglas D. Zhang	Registration Number 37,985

Note: *Signatures of all the inventors or assignees of record of the entire interest or their representative(s) are required in accordance with 37 CFR 1.33 and 11.18. Please see 37 CFR 1.4(d) for the form of the signature. If necessary, submit multiple forms for more than one signature see below*.*

☐ *Total of ..... forms are submitted.

The information is required to obtain or retain a benefit by the public which is to file (and by the USPTO to process) an application. Confidentiality is governed by 35 U.S.C. 122 and 37 CFR 1.11 and 1.14. This collection is estimated to take 12 hours to complete, including gathering, preparing, and submitting the completed application form to the USPTO. Time will vary depending upon the individual case. Any comments on the amount of time you require to complete this form and/or suggestions for reducing this burden, should be sent to the Chief Information Officer, U.S. Patent and Trademark Office, U.S. Department of Commerce, P.O. Box 1450, Alexandria, VA 22313-1450. DO NOT SEND FEES OR COMPLETED FORMS TO THIS ADDRESS. **SEND TO: Commissioner for Patents, P.O. Box 1450, Alexandria, VA 22313-1450.**

If you need assistance in completing the form, call 1-800-PTO-9199 and select option 2.

Under the Paperwork Reduction Act of 1995, no persons are required to respond to a collection of information unless it displays a valid OMB control number.

Instruction Sheet for Petition to Make Special Under the Green Technology Pilot Program

(Not to be Submitted to the USPTO)

The following is a summary of the requirements (for more information see the notices (i) "Pilot Program for Green Technologies Including Greenhouse Gas Reduction," (ii) "Elimination of Classification Requirement in the Green Technology Pilot Program," and (iii) "Expansion and Extension of the Green Technology Pilot Program," available on the USPTO web site at http://www.uspto.gov/patents/init_events/green_tech.jsp):

1) The application must be a non-reissue, non-provisional utility application filed under 35 U.S.C. 111 (a), or an international application that has entered the national stage in compliance with 35 U.S.C. 371, irrespective of the filing date of the application. Reexamination proceedings are excluded from this pilot program.

2) The application must contain three or fewer independent claims and twenty or fewer total claims. The application must not contain any multiple dependent claims. For an application that contains more than three independent claims or twenty total claims, or multiple dependent claims, applicant must file a preliminary amendment in compliance with 37 CFR 1.121 to cancel the excess claims and/or the multiple dependent claims at the time the petition to make special is filed.

3) The claims must be directed to a single invention that materially enhances the quality of the environment, or that materially contributes to: (1) the discovery or development of renewable energy resources; (2) the more efficient utilization and conservation of energy resources; or (3) green house gas emission reduction (see the eligibility requirements of sections II and III of the notice (i) cited above). The petition must include a statement that, if the USPTO determines that the claims are directed to multiple inventions (e.g., in a restriction requirement), applicant will agree to make an election without traverse in a telephonic interview, and elect an invention that meets the eligibility requirements in section II or III of the notice (i) cited above.

4) The petition to make special must be timely filed electronically using the USPTO electronic filing system, EFS-Web, and selecting the document description of "Petition for Green Tech Pilot" on the EFS-Web screen. Applicant should use form PTO/SB/420, which is available as a Portable Document Format (PDF) fillable form in EFS-Web and on the USPTO Web site.

5) The petition to make special must be filed at least one day prior to the date that a first Office action (which may be an Office action containing only a restriction requirement) appears in the Patent Application Information Retrieval (PAIR) system. Applicant may check the status of the application using PAIR.

6) The petition to make special must be accompanied by a request for early publication in compliance with 37 CFR 1.219 and the publication fee set forth in 37 CFR 1.18(d).

Privacy Act Statement

The **Privacy Act of 1974 (P.L. 93-579)** requires that you be given certain information in connection with your submission of the attached form related to a patent application or patent. Accordingly, pursuant to the requirements of the Act, please be advised that: (1) the general authority for the collection of this information is 35 U.S.C. 2(b)(2); (2) furnishing of the information solicited is voluntary; and (3) the principal purpose for which the information is used by the U.S. Patent and Trademark Office is to process and/or examine your submission related to a patent application or patent. If you do not furnish the requested information, the U.S. Patent and Trademark Office may not be able to process and/or examine your submission, which may result in termination of proceedings or abandonment of the application or expiration of the patent.

The information provided by you in this form will be subject to the following routine uses:

1. The information on this form will be treated confidentially to the extent allowed under the Freedom of Information Act (5 U.S.C. 552) and the Privacy Act (5 U.S.C 552a). Records from this system of records may be disclosed to the Department of Justice to determine whether disclosure of these records is required by the Freedom of Information Act.
2. A record from this system of records may be disclosed, as a routine use, in the course of presenting evidence to a court, magistrate, or administrative tribunal, including disclosures to opposing counsel in the course of settlement negotiations.
3. A record in this system of records may be disclosed, as a routine use, to a Member of Congress submitting a request involving an individual, to whom the record pertains, when the individual has requested assistance from the Member with respect to the subject matter of the record.
4. A record in this system of records may be disclosed, as a routine use, to a contractor of the Agency having need for the information in order to perform a contract. Recipients of information shall be required to comply with the requirements of the Privacy Act of 1974, as amended, pursuant to 5 U.S.C. 552a(m).
5. A record related to an International Application filed under the Patent Cooperation Treaty in this system of records may be disclosed, as a routine use, to the International Bureau of the World Intellectual Property Organization, pursuant to the Patent Cooperation Treaty.
6. A record in this system of records may be disclosed, as a routine use, to another federal agency for purposes of National Security review (35 U.S.C. 181) and for review pursuant to the Atomic Energy Act (42 U.S.C. 218(c)).
7. A record from this system of records may be disclosed, as a routine use, to the Administrator, General Services, or his/her designee, during an inspection of records conducted by GSA as part of that agency's responsibility to recommend improvements in records management practices and programs, under authority of 44 U.S.C. 2904 and 2906. Such disclosure shall be made in accordance with the GSA regulations governing inspection of records for this purpose, and any other relevant (*i.e.*, GSA or Commerce) directive. Such disclosure shall not be used to make determinations about individuals.
8. A record from this system of records may be disclosed, as a routine use, to the public after either publication of the application pursuant to 35 U.S.C. 122(b) or issuance of a patent pursuant to 35 U.S.C. 151. Further, a record may be disclosed, subject to the limitations of 37 CFR 1.14, as a routine use, to the public if the record was filed in an application which became abandoned or in which the proceedings were terminated and which application is referenced by either a published application, an application open to public inspection or an issued patent.
9. A record from this system of records may be disclosed, as a routine use, to a Federal, State, or local law enforcement agency, if the USPTO becomes aware of a violation or potential violation of law or regulation.

UNITED STATES PATENT AND TRADEMARK OFFICE

UNITED STATES DEPARTMENT OF COMMERCE
United States Patent and Trademark Office
Address: COMMISSIONER FOR PATENTS
P.O. Box 1450
Alexandria, Virginia 22313-1450
www.uspto.gov

APPLICATION NO.	FILING DATE	FIRST NAMED INVENTOR	ATTORNEY DOCKET NO.	CONFIRMATION NO.
12/914,512	10/28/2010	Adnan Kutubuddin Bohori	242469-1	5926

6147 7590 01/12/2011
GENERAL ELECTRIC COMPANY
GLOBAL RESEARCH
ONE RESEARCH CIRCLE
BLDG. K1-3A59
NISKAYUNA, NY 12309

EXAMINER

ART UNIT	PAPER NUMBER
2839	

NOTIFICATION DATE	DELIVERY MODE
01/12/2011	ELECTRONIC

Please find below and/or attached an Office communication concerning this application or proceeding.

The time period for reply, if any, is set in the attached communication.

Notice of the Office communication was sent electronically on above-indicated "Notification Date" to the following e-mail address(es):

ldocket@crd.ge.com
rosssr@ge.com
gpodckt.mail@ge.com

UNITED STATES PATENT AND TRADEMARK OFFICE

Commissioner for Patents
United States Patent and Trademark Office
P.O. Box 1450
Alexandria, VA 22313-1450
www.uspto.gov

GENERAL ELECTRIC COMPANY
GLOBAL RESEARCH
ONE RESEARCH CIRCLE
BLDG. K1-3A59
NISKAYUNA NY 12309

In re Application of	:	
BOHORI et al.	:	DECISION ON PETITION
Application No. 12/914,512	:	TO MAKE SPECIAL UNDER
Filed: October 28, 2010	:	THE GREEN TECHNOLOGY
Attorney Docket No. 242469-1	:	PILOT PROGRAM

This is a decision on the petition under 37 CFR 1.102, filed on January 07, 2011, to make the above-identified application special under the pilot program for applications pertaining to Green Technologies as set forth 74 Federal Register Notice 64666 (December 8, 2009) and amended by 75 Federal Register Notice 28554 (May 21, 2010) and 75 Federal Register Notice 69049 (November 10, 2010).

The petition is **DISMISSED**.

If reconsideration of this decision is desired, a petition for reconsideration must be filed within ONE (1) MONTH OR THIRTY (30) DAYS from the mail date of this decision, whichever is longer. No extension of this time limit can be granted under 37 CFR 1.136(a) or (b). The petition for reconsideration should include an exhaustive attempt to provide the lacking item(s) noted below, since, after a decision on the petition for reconsideration, no further reconsideration or review of the matter will be undertaken by the Director.

A grantable petition to make an application special under 37 CFR 1.102 and the pilot program as set forth in 74 FR 64666 must be directed to a nonprovisional application filed under 35 USC 111(a) or be a national stage entry under 35 USC 371, exclusive of any reissue applications and be filed prior to the date of the notice, December 8, 2009.

In order to qualify for special status, the following requirements must be met. 1) The application must have no more than 3 independent claims and no more than 20 total claims. 2) The application must not contain any multiple dependent claims. 3) The petition must state the basis for seeking special status, i.e., the claimed invention either: A) materially enhances the quality of the environment or B) materially contributes to: i) the discovery or development of renewable energy resources, ii) the more efficient utilization and conservation of energy resources, or iii) greenhouse gas emission reduction. 4) If the disclosure is not clear on its face that the claimed invention materially contributes under category (A) or (B), the petition must be accompanied by

a statement by the applicant, assignee, or an attorney/agent registered to practice before the Office explaining how the materiality standard is met. 5) A statement that applicant will agree to make an election without traverse in a telephonic interview if a restriction requirement is made by the examiner. 6) The petition to make special must be filed electronically. 7) The petition must be filed at least one day prior to the date that a first Office Action appears in the Patent Application Information Retrieval (PAIR) system. 8) The petition must be accompanied by a request for early publication in compliance with 37 CFR 1.219 and include the publication fee as set forth in 37 CFR 1.18(d).

The requirement for a fee for consideration of the petition to make special for applications pertaining to Green Technologies has been waived.

The petition lacks item 4.

In regard to item 4, applicant's statement pertaining to how the materiality standard is met does not satisfy the requirements for this pilot. The instant petition includes a statement identifying the basis for the special status as contributing to the development of renewable energy resources or energy conservation. The materiality standard does not permit an applicant to speculate as to how a hypothetical end-user might specially apply the invention in a manner that could contribute to the development of renewable resources or energy conservation. Any argument that the claimed invention can be used with wind turbine generators is considered speculate as to how a hypothetical end-user might specially apply the claimed invention.

Any reconsideration of this decision should be submitted through the USPTO electronic filing system, EFS-Web, and selecting the document description of "Petition for Green Tech Pilot" on the EFS-Web screen.

Telephone inquiries concerning this decision should be directed to Lee W. Young at 571-272-4549.

The application is being forwarded to the Technology Center Art Unit 2839 for action in its regular turn.

Lee W. Young
Quality Assurance Specialist
Technology Center 2800

IN THE UNITED STATES PATENT AND TRADEMARK OFFICE

First Named Inventor: Adnan Bohori	)
Confirmation No.: 5926	)
	)
Serial No.: 12/914512	)
	)
Filing Date: 10-28-10	)
	)
Atty Docket No.: 242469	)

Commissioner for Patents
P.O. Box 1450
Alexandria, VA 22313-1450

Request for Reconsideration

SIR:

This is responsive to the Decision on Petition, dated as mailed 12 January 2011, in the above-referenced application.

Applicant respectfully requests reconsideration of Applicant's Petition to Make Special on the basis that the present invention materially contributes to the development of renewable energy resources or energy conservation.

Applicant respectfully submits that the present invention is directed to systems for contactless power transfer between components wherein at least one of the components is rotating, for example in a wind turbine. Applicant respectfully disagrees that it is speculative as to how a hypothetical end-user might specially apply the present invention to state that the present invention can be used with a wind turbine. In contrast, an embodiment disclosed in the present application includes a turbine including a contactless power transfer system configured to transfer power to a blade pitch motor from a power generator. In one embodiment, the turbine comprises a wind turbine. Based on the above, it is

believed that the use of the present invention with a wind turbine is not mere speculation.

As alternatives to mechanical slip rings, rotary transformers are used in some applications to provide contactless power transfer between rotatable components. A rotary transformer includes two rotating inductive coils and works on the principle of induction coupling to transfer power from one coil to another. Rotary transformers operating at power frequencies of 50 Hz or 60 Hz are bulky and heavy. One way of reducing the size of a rotary transformer is to operate the transformer at high frequencies and couple resonant tank circuits to primary and secondary windings of the transformer. However, upon reduction of rotary transformer size, the efficiency of the rotary transformer becomes more sensitive to changes in the gap between the primary and secondary windings of the transformer or load variations in the machine. In other words, any change in the air gap between the two coils reduces the magnetic field coupling and results in reduced efficiency of the rotary transformer.

The various embodiments of the contactless power transfer system described in the present application include a power source, a first coil, a field focusing element and a second coil and enable transfer of power via a contactless medium from the first coil to the second coil. The contactless power transfer system enables efficient contactless power transfer between a stationary component and a rotatory component, for example. The contactless power transfer system also maintains the efficiency in case of any deviation in the air

gap between the first coil and the second coil. This provides minimum maintenance and higher range of operation to the contactless power system.

As a result, a turbine, such as a wind turbine, comprising the contactless power system of the present application would produce more energy because turbine operation would be limited less by turbine downtime associated with the performance of maintenance and repair of turbine components. The turbine would also more efficiently produce energy. Thus the present invention materially contributes to the development of renewable energy by reducing the need for wind turbine maintenance and improving wind turbine operation, which in turn promotes increased energy production.

The undersigned attorney may be contacted at the number below to facilitate the resolution of any matters. Please charge any fees that are incurred in connection with this Statement to deposit account no. 09-0470.

Respectfully submitted,

General Electric Company

By : /Douglas D. Zhang/
Douglas D. Zhang
Reg. No. 37,985

Dated: February 11, 2011

GE Global Patent Operation
2 Corporate Drive, Suite 648
Shelton, CT 06484
203-944-6755

UNITED STATES PATENT AND TRADEMARK OFFICE

UNITED STATES DEPARTMENT OF COMMERCE
United States Patent and Trademark Office
Address: COMMISSIONER FOR PATENTS
P.O. Box 1450
Alexandria, Virginia 22313-1450
www.uspto.gov

APPLICATION NO.	FILING DATE	FIRST NAMED INVENTOR	ATTORNEY DOCKET NO.	CONFIRMATION NO.
12/914,512	10/28/2010	Adnan Kutubuddin Bohori	242469-1	5926

6147 7590 03/11/2011
GENERAL ELECTRIC COMPANY
GLOBAL RESEARCH
ONE RESEARCH CIRCLE
BLDG. K1-3A59
NISKAYUNA, NY 12309

EXAMINER
PONOMARENKO, NICHOLAS

ART UNIT	PAPER NUMBER
2839	

NOTIFICATION DATE	DELIVERY MODE
03/11/2011	ELECTRONIC

Please find below and/or attached an Office communication concerning this application or proceeding.

The time period for reply, if any, is set in the attached communication.

Notice of the Office communication was sent electronically on above-indicated "Notification Date" to the following e-mail address(es):

ldocket@crd.ge.com
rosssr@ge.com
wahld@ge.com

UNITED STATES PATENT AND TRADEMARK OFFICE

Commissioner for Patents
United States Patent and Trademark Office
P.O. Box 1450
Alexandria, VA 22313-1450
www.uspto.gov

GENERAL ELECTRIC COMPANY
GLOBAL RESEARCH
ONE RESEARCH CIRCLE
BLDG. K1-3A59
NISKAYUNA NY 12309

In re Application of	:	
BOHORI et al.	:	DECISION ON PETITION
Application No. 12/914,512	:	TO MAKE SPECIAL UNDER
Filed: October 28, 2010	:	THE GREEN TECHNOLOGY
Attorney Docket No. 242469-1	:	PILOT PROGRAM

This is a decision on the petition under 37 CFR 1.102, filed on January 07, 2011, to make the above-identified application special under the pilot program for applications pertaining to Green Technologies as set forth 74 Federal Register Notice 64666 (December 8, 2009) and amended by 75 Federal Register Notice 28554 (May 21, 2010) and 75 Federal Register Notice 69049 (November 10, 2010).

The petition is **GRANTED**.

A grantable petition to make an application special under 37 CFR 1.102 and the pilot program as set forth in 74 FR 64666 must be directed to a nonprovisional application filed under 35 USC 111(a) or be a national stage entry under 35 USC 371, exclusive of any reissue applications.

In order to qualify for special status, the following requirements must be met. 1) The application must have no more than 3 independent claims and no more than 20 total claims. 2) The application must not contain any multiple dependent claims. 3) The petition must state the basis for seeking special status, i.e., the claimed invention either: A) materially enhances the quality of the environment or B) materially contributes to: i) the discovery or development of renewable energy resources, ii) the more efficient utilization and conservation of energy resources, or iii) greenhouse gas emission reduction. 4) If the disclosure is not clear on its face that the claimed invention materially contributes under category (A) or (B), the petition must be accompanied by a statement by the applicant, assignee, or an attorney/agent registered to practice before the Office explaining how the materiality standard is met. 5) A statement that applicant will agree to make an election without traverse in a telephonic interview if a restriction requirement is made by the examiner. 6) The petition to make special must be filed electronically. 7) The petition must be filed at least one day prior to the date that a first Office Action appears in the Patent Application Information Retrieval (PAIR) system. 8) The petition must be accompanied by a request for early publication in compliance with 37 CFR 1.219 and include the publication fee as set forth in 37 CFR 1.18(d).

The requirement for a fee for consideration of the petition to make special for applications pertaining to Green Technologies has been waived.

The instant petition complies with items 1 – 8 above. Accordingly, the above-identified application has been accorded "special" status.

The petition is being granted on the basis of more efficient utilization and conservation of energy resources because it is argued that the claimed invention is more efficient than mechanical slip ring transformers.

Telephone inquires concerning this decision should be directed to Lee W. Young at 571-272-4549.

The application is being forwarded to the Technology Center Art Unit 2836 for action in its regular turn.

Lee W. Young
Quality Assurance Specialist
Technology Center 2800

UNITED STATES PATENT AND TRADEMARK OFFICE

Commissioner for Patents
United States Patent and Trademark Office
P.O. Box 1450
Alexandria, VA 22313-1450
www.uspto.gov

Decision Date : February 9, 2012

In re Application of :

Michael Boks

DECISION ON PETITION

UNDER CFR 1.313(c)(2)

Application No : 12914519

Filed : 28-Oct-2010

Attorney Docket No : 3202-0090.01

This is an electronic decision on the petition under 37 CFR 1.313(c)(2), filed February 9, 2012 , to withdraw the above-identified application from issue after payment of the issue fee.

The petition is **GRANTED.**

The above-identified application is withdrawn from issue for consideration of a submission under 37 CFR 1.114 (request for continued examination). See 37 CFR 1.313(c)(2).

Petitioner is advised that the issue fee paid in this application cannot be refunded. If, however, this application is again allowed, petitioner may request that it be applied towards the issue fee required by the new Notice of Allowance.

Telephone inquiries concerning this decision should be directed to the Patent Electronic Business Center (EBC) at 866-217-9197.

This application file is being referred to Technology Center AU 3637 for processing of the request for continuing examination under 37 CFR 1.114 .

Office of Petitions

Doc Code: PET.AUTO Document Description: Petition automatically granted by EFS-Web	PTO/SB/140 U.S. Patent and Trademark Office Department of Commerce

Electronic Petition Request	**PETITION TO WITHDRAW AN APPLICATION FROM ISSUE AFTER PAYMENT OF THE ISSUE FEE UNDER 37 CFR 1.313(c)**
Application Number	12914519
Filing Date	28-Oct-2010
First Named Inventor	Michael Boks
Art Unit	3637
Examiner Name	SASHA VARGHESE
Attorney Docket Number	3202-0090.01
Title	CLOSING DEVICE FOR DRAWERS

An application may be withdrawn from issue for further action upon petition by the applicant. To request that the Office withdraw an application from issue, applicant must file a petition under this section including the fee set forth in § 1.17(h) and a showing of good and sufficient reasons why withdrawal of the application from issue is necessary.

APPLICANT HEREBY PETITIONS TO WITHDRAW THIS APPLICATION FROM ISSUE UNDER 37 CFR 1.313(c).

A grantable petition requires the following items:
(1) Petition fee; and
(2) One of the following reasons:
(a) Unpatentability of one or more claims, which must be accompanied by an unequivocal statement that one or more claims are unpatentable, an amendment to such claim or claims, and an explanation as to how the amendment causes such claim or claims to be patentable;
(b) Consideration of a request for continued examination in compliance with § 1.114 (for a utility or plant application only); or
(c) Express abandonment of the application. Such express abandonment may be in favor of a continuing application, but not a CPA under 37 CFR 1.53(d).

Petition Fee

☐ Applicant claims SMALL ENTITY status. See 37 CFR 1.27.

☐ Applicant is no longer claiming SMALL ENTITY status. See 37 CFR 1.27(g)(2).

☐ Applicant(s) status remains as SMALL ENTITY.

☒ Applicant(s) status remains as other than SMALL ENTITY

Reason for withdrawal from issue

○ One or more claims are unpatentable

◉ Consideration of a request for continued examination (RCE) (List of Required Documents and Fees)

○ Applicant hereby expressly abandons the instant application (any attorney/agent signing for this reason must have power of attorney pursuant to 37 CFR 1.32(b)).

RCE request,submission, and fee.

☐ I certify, in accordance with 37 CFR 1.4(d)(4) that : The RCE request ,submission, and fee have already been filed in the above-identified application on

☒ Are attached.

THIS PORTION MUST BE COMPLETED BY THE SIGNATORY OR SIGNATORIES

I certify, in accordance with 37 CFR 1.4(d)(4) that I am:

◉ An attorney or agent registered to practice before the Patent and Trademark Office who has been given power of attorney in this application.

○ An attorney or agent registered to practice before the Patent and Trademark Office, acting in a representative capacity.

○ A sole inventor

○ A joint inventor; I certify that I am authorized to sign this submission on behalf of all of the inventors

○ A joint inventor; all of whom are signing this e-petition

○ The assignee of record of the entire interest that has properly made itself of record pursuant to 37 CFR 3.71

Signature	/David M. Thimmig/
Name	David M. Thimmig
Registration Number	36034

UNITED STATES PATENT AND TRADEMARK OFFICE

UNITED STATES DEPARTMENT OF COMMERCE
United States Patent and Trademark Office
Address: COMMISSIONER FOR PATENTS
P.O. Box 1450
Alexandria, Virginia 22313-1450
www.uspto.gov

APPLICATION NO.	FILING DATE	FIRST NAMED INVENTOR	ATTORNEY DOCKET NO.	CONFIRMATION NO.
12/914,554	10/28/2010	Poul T. Tietze	VWS-186US	6019

26875 7590 12/08/2010
WOOD, HERRON & EVANS, LLP
2700 CAREW TOWER
441 VINE STREET
CINCINNATI, OH 45202

EXAMINER

ART UNIT	PAPER NUMBER
3744	

MAIL DATE	DELIVERY MODE
12/08/2010	PAPER

Please find below and/or attached an Office communication concerning this application or proceeding.

The time period for reply, if any, is set in the attached communication.

UNITED STATES PATENT AND TRADEMARK OFFICE

Commissioner for Patents
United States Patent and Trademark Office
P.O. Box 1450
Alexandria, VA 22313-1450
www.uspto.gov

WOOD, HERRON & EVANS, LLP
2700 CAREW TOWER
441 VINE STREET
CINCINNATI OH 45202

In re Application of	:	
TIETZE, POUL T. et al	:	DECISION ON REQUEST TO
Application No. 12/914,554	:	PARTICIPATE IN PATENT
Filed: July 8, 2010	:	PROSECUTION HIGHWAY
Attorney Docket No. VWS-186US	:	PILOT PROGRAM AND PETITION
For: COOLING SYSTEM FOR A WIND	:	TO MAKE SPECIAL UNDER
TURBINE	:	37 CFR 1.102(a)

This is a decision on the request to participate in the Patent Prosecution Highway (PPH) pilot program under 37 CFR 1.102(d), filed December 7, 2010, to make the above-identified application special.

The request and petition are Granted.

A grantable request to participate in the PPH pilot program and petition to make special require:

(1) The U.S. application must validly claim priority under 35 U.S.C. 119(a) to one or more applications filed in the DKPTO;
(2) Applicant must submit a copy of the allowable/patentable claim(s) from the DKPTO application(s);
(3) All the claims in the U.S. application must sufficiently correspond or be amended to sufficiently correspond to the allowable/patentable claim(s) in the DKPTO application(s);
(4) Examination of the U.S. application has not begun;
(5) Applicant must submit a copy of all the office actions from each of the DKPTO application(s) containing the allowable/patentable claim(s); and
(6) Applicant must submit an IDS listing the documents cited by the DKPTO examiner in the DKPTO office action along with copies of documents except U.S. patents or U.S. patent application publications.

The request to participate in the PPH pilot program and petition comply with the above requirements. Receipt of the IDS statement is acknowledged. Accordingly, the above-identified application has been accorded "special" status.

Telephone inquiries concerning this decision should be directed to Henry C. Yuen, at 571-272-4856.

All other inquiries concerning the examination or status of the application should be directed to Cheryl Tyler, SPE of Art Unit 3744 and 571-272-4834.

This application is currently undergoing pre-examination processing. Once completed, the application will be forwarded and docketed to an examiner for action on the merits commensurate with this decision.

Petition is **granted**.

/Henry C. Yuen/

Henry C. Yuen, Special Programs Examiner
Technology Center 3700 – Mechanical Engineering,
Manufacturing and Products
571-272-4856

UNITED STATES PATENT AND TRADEMARK OFFICE

Commissioner for Patents
United States Patent and Trademark Office
P.O. Box 1450
Alexandria, VA 22313-1450
www.uspto.gov

THOMPSON PATENT LAW OFFICES PC
4205 LANCASTER LANE NORTH
SUITE 104
PLYMOUTH MN 55441

MAILED
SEP 20 2011
OFFICE OF PETITIONS

In re Application of	:	
GRAJCAR, Zdenko	:	
Application No. 12/914,575	:	DECISION ON PETITION
Filed: October 28, 2010	:	TO WITHDRAW
Attorney Docket No. 12-16	:	FROM RECORD
	:	

This is a decision on the Request to Withdraw as attorney or agent under 37 C.F.R. § 1.36(b) or 37 C.F.R. § 10.40 filed September 07, 2011.

The request is **NOT APPROVED.**

A review of the file record indicates that Customer Number 88145 does not have power of attorney in this patent application nor is there any statement or evidence of record of employment in or otherwise being engaged in the proceedings in this patent application. Accordingly, the request to withdraw under 37 C.F.R. § 1.36(b) is not applicable.

All future communications from the Office will continue to be directed to the above-listed address until otherwise properly notified by the applicant.

Telephone inquires concerning this decision should be directed to the undersigned at (571) 272-4231.

Michelle R. Eason
Paralegal Specialist
Office of Petitions

IN THE UNITED STATES PATENT AND TRADEMARK OFFICE

First Named Inventor: Peter James FRITZ	)
Confirmation No.: 6094	)
	)
Serial No.: 12/914,589	)
	)
Filing Date: October 28, 2010	)
	)
Atty Docket No.: 246441-1	)

Commissioner for Patents
P.O. Box 1450
Alexandria, VA 22313-1450

Statement Concerning the Basis for the Special Status

SIR:

Applicant respectfully submits that Special Status is sought on the basis that the present invention materially contributes to the development of renewable energy resources or energy conservation.

The undersigned attorney may be contacted at the number below to facilitate the resolution of any matters. Please charge any fees that are incurred in connection with this Statement to deposit account no. 09-0470.

Respectfully submitted,

General Electric Company

By : /Douglas D. Zhang/
Douglas D. Zhang
Reg. No. 37,985

Dated: December 29, 2010

GE Global Patent Operation
2 Corporate Drive, Suite 648
Shelton, CT 06484
203-944-6755

Doc Code: PET.GREEN
Document Description: Petition for Green Tech Pilot

PTO/SB/420 (11-10)
Approved for use through 01/31/2011. OMB 0651-0062
U.S. Patent and Trademark Office; U. S. DEPARTMENT OF COMMERCE
Under the Paperwork Reduction Act of 1995, no persons are required to respond to a collection of information unless it displays a valid OMB control number.

PETITION TO MAKE SPECIAL UNDER THE GREEN TECHNOLOGY PILOT PROGRAM

Attorney Docket Number: 246441-1	Application Number (if known): 12/914,589	Filing date: October 28, 2010
First Named Inventor: Peter James FRITZ		
Title: SPAR CAP ASSEMBLY FOR A WIND TURBINE ROTOR BLADE		

APPLICANT HEREBY REQUESTS TO PARTICIPATE IN THE GREEN TECHNOLOGY PILOT PROGRAM FOR THE ABOVE-IDENTIFIED APPLICATION. See Instruction Sheet on page 2.

This petition must be timely filed electronically using the USPTO electronic filing system, EFS-Web.

1. By filing this petition:

   Applicant is requesting early publication: Applicant hereby requests early publication under 37 CFR 1.219 and the publication fee set forth in 37 CFR 1.18(d) accompanies this request.

2. By filing this petition: applicant is agreeing to make an election without traverse in a telephonic interview and elect an invention that meets the eligibility requirements for the Green Technology Pilot Program, if the Office determines that the claims are not obviously directed to a single invention. See Instruction Sheet.

3. This request is accompanied by statements of special status for the eligibility requirement.

4. The application contains no more than three (3) independent claims and twenty (20) total claims.

5. The application does not contain any multiple dependent claims.

6. Other attachments: Statement Concerning the Basis for the Special Status

Signature /Douglas D. Zhang/	Date December 29, 2010
Name (Print/Typed) Douglas D. Zhang	Registration Number 37,985

Note: *Signatures of all the inventors or assignees of record of the entire interest or their representative(s) are required in accordance with 37 CFR 1.33 and 11.18. Please see 37 CFR 1.4(d) for the form of the signature. If necessary, submit multiple forms for more than one signature see below*.*

☐ *Total of ..... forms are submitted.

The information is required to obtain or retain a benefit by the public which is to file (and by the USPTO to process) an application. Confidentiality is governed by 35 U.S.C. 122 and 37 CFR 1.11 and 1.14. This collection is estimated to take 12 hours to complete, including gathering, preparing, and submitting the completed application form to the USPTO. Time will vary depending upon the individual case. Any comments on the amount of time you require to complete this form and/or suggestions for reducing this burden, should be sent to the Chief Information Officer, U.S. Patent and Trademark Office, U.S. Department of Commerce, P.O. Box 1450, Alexandria, VA 22313-1450. DO NOT SEND FEES OR COMPLETED FORMS TO THIS ADDRESS. **SEND TO: Commissioner for Patents, P.O. Box 1450, Alexandria, VA 22313-1450.**

If you need assistance in completing the form, call 1-800-PTO-9199 and select option 2.

Privacy Act Statement

The **Privacy Act of 1974 (P.L. 93-579)** requires that you be given certain information in connection with your submission of the attached form related to a patent application or patent. Accordingly, pursuant to the requirements of the Act, please be advised that: (1) the general authority for the collection of this information is 35 U.S.C. 2(b)(2); (2) furnishing of the information solicited is voluntary; and (3) the principal purpose for which the information is used by the U.S. Patent and Trademark Office is to process and/or examine your submission related to a patent application or patent. If you do not furnish the requested information, the U.S. Patent and Trademark Office may not be able to process and/or examine your submission, which may result in termination of proceedings or abandonment of the application or expiration of the patent.

The information provided by you in this form will be subject to the following routine uses:

1. The information on this form will be treated confidentially to the extent allowed under the Freedom of Information Act (5 U.S.C. 552) and the Privacy Act (5 U.S.C 552a). Records from this system of records may be disclosed to the Department of Justice to determine whether disclosure of these records is required by the Freedom of Information Act.
2. A record from this system of records may be disclosed, as a routine use, in the course of presenting evidence to a court, magistrate, or administrative tribunal, including disclosures to opposing counsel in the course of settlement negotiations.
3. A record in this system of records may be disclosed, as a routine use, to a Member of Congress submitting a request involving an individual, to whom the record pertains, when the individual has requested assistance from the Member with respect to the subject matter of the record.
4. A record in this system of records may be disclosed, as a routine use, to a contractor of the Agency having need for the information in order to perform a contract. Recipients of information shall be required to comply with the requirements of the Privacy Act of 1974, as amended, pursuant to 5 U.S.C. 552a(m).
5. A record related to an International Application filed under the Patent Cooperation Treaty in this system of records may be disclosed, as a routine use, to the International Bureau of the World Intellectual Property Organization, pursuant to the Patent Cooperation Treaty.
6. A record in this system of records may be disclosed, as a routine use, to another federal agency for purposes of National Security review (35 U.S.C. 181) and for review pursuant to the Atomic Energy Act (42 U.S.C. 218(c)).
7. A record from this system of records may be disclosed, as a routine use, to the Administrator, General Services, or his/her designee, during an inspection of records conducted by GSA as part of that agency's responsibility to recommend improvements in records management practices and programs, under authority of 44 U.S.C. 2904 and 2906. Such disclosure shall be made in accordance with the GSA regulations governing inspection of records for this purpose, and any other relevant (*i.e.*, GSA or Commerce) directive. Such disclosure shall not be used to make determinations about individuals.
8. A record from this system of records may be disclosed, as a routine use, to the public after either publication of the application pursuant to 35 U.S.C. 122(b) or issuance of a patent pursuant to 35 U.S.C. 151. Further, a record may be disclosed, subject to the limitations of 37 CFR 1.14, as a routine use, to the public if the record was filed in an application which became abandoned or in which the proceedings were terminated and which application is referenced by either a published application, an application open to public inspection or an issued patent.
9. A record from this system of records may be disclosed, as a routine use, to a Federal, State, or local law enforcement agency, if the USPTO becomes aware of a violation or potential violation of law or regulation.

UNITED STATES PATENT AND TRADEMARK OFFICE

UNITED STATES DEPARTMENT OF COMMERCE
United States Patent and Trademark Office
Address: COMMISSIONER FOR PATENTS
P.O. Box 1450
Alexandria, Virginia 22313-1450
www.uspto.gov

APPLICATION NO.	FILING DATE	FIRST NAMED INVENTOR	ATTORNEY DOCKET NO.	CONFIRMATION NO.
12/914,589	10/28/2010	Peter James Fritz	246441/GEC-176	6094

87853 7590 01/05/2011
Dority & Manning, PA and General Electric Company
Post Office Box 1449
Greenville, SC 29602

EXAMINER
ELLIS, RYAN H

ART UNIT	PAPER NUMBER
3745	

MAIL DATE	DELIVERY MODE
01/05/2011	PAPER

Please find below and/or attached an Office communication concerning this application or proceeding.

The time period for reply, if any, is set in the attached communication.

UNITED STATES PATENT AND TRADEMARK OFFICE

Commissioner for Patents
United States Patent and Trademark Office
P.O. Box 1450
Alexandria, VA 22313-1450
www.uspto.gov

Dority & Manning, PA and General Electric Company
Post Office Box 1449
Greenville SC 29602

In re Application of	:	
FRITZ, PETER JAMES et al	:	DECISION ON PETITION
Application No. 12/914,589	:	TO MAKE SPECIAL UNDER
Filed: Oct. 28, 2010	:	THE GREEN TECHNOLOGY
Attorney Docket No. 246441/GEC/176	:	PILOT PROGRAM

This is a decision on the petition under 37 CFR 1.102, filed Dec. 30, 2010, to make the above-identified application special under the pilot program for applications pertaining to Green Technologies as set forth in 74 Federal Register Notice 64666 (December 8, 2009) and amended by 75 Federal Register Notice 28554 (May 21, 2010) and 75 Federal Register Notice 69049 (November 10, 2010).

The petition is **Granted**.

If reconsideration of this decision is desired, a petition for reconsideration must be filed within ONE (1) MONTH OR THIRTY (30) DAYS from the mail date of this decision, whichever is longer. No extension of this time limit can be granted under 37 CFR 1.136(a) or (b). The petition for reconsideration should include an exhaustive attempt to provide the lacking item(s) noted below, since, after a decision on the petition for reconsideration, no further reconsideration or review of the matter will be undertaken by the Director.

A grantable petition to make an application special under 37 CFR 1.102 and the pilot program as set forth in 74 FR 64666 must be directed to a nonprovisional application filed under 35 USC 111(a) or be a national stage entry under 35 USC 371, exclusive of any reissue applications.

In order to qualify for special status, the following requirements must be met. 1) The application must have no more than 3 independent claims and no more than 20 total claims. 2) The application must not contain any multiple dependent claims. 3) The petition must state the basis for seeking special status, i.e., the claimed invention either: A) materially enhances the quality of the environment or B) materially contributes to: i) the discovery or development of renewable

energy resources, ii) the more efficient utilization and conservation of energy resources, or iii) greenhouse gas emission reduction. 4) If the disclosure is not clear on its face that the claimed invention materially contributes under category (A) or (B), the petition must be accompanied by a statement by the applicant, assignee, or an attorney/agent registered to practice before the Office explaining how the materiality standard is met. 5) A statement that applicant will agree to make an election without traverse in a telephonic interview if a restriction requirement is made by the examiner. 6) The petition to make special must be filed electronically. 7) The petition must be filed at least one day prior to the date that a first Office Action appears in the Patent Application Information Retrieval (PAIR) system. 8) The petition must be accompanied by a request for early publication in compliance with 37 CFR 1.219 and include the publication fee as set forth in 37 CFR 1.18(d).

The requirement for a fee for consideration of the petition to make special for applications pertaining to Green Technologies has been waived.

The instant petition complies with items 1 – 8 above. Accordingly, the above-identified application has been accorded "special" status.

Telephone inquires concerning this decision should be directed to Henry C. Yuen at 571-272-4856.

The application will be forwarded to the Technology Center Art Unit 3745 for action on the merits commensurate with this decision.

/Henry C. Yuen/

Henry C. Yuen
Quality Assurance Specialist
Technology Center TC 3700

UNITED STATES PATENT AND TRADEMARK OFFICE

Commissioner for Patents
United States Patent and Trademark Office
P.O. Box 1450
Alexandria, VA 22313-1450
www.uspto.gov

MAILED
FEB 02 2012
OFFICE OF PETITIONS

KNOBBE MARTENS OLSON & BEAR LLP
2040 MAIN STREET
FOURTEENTH FLOOR
IRVINE, CA 92614

In re Application of	:	
Nathan Allen, et al.	:	
Application No. 12/914,599	:	DECISION ON PETITION
Filed: October 28, 2010	:	TO WITHDRAW
Attorney Docket No. PSPWR.288PPC1	:	FROM RECORD
	:	

This is a decision on the Request to Withdraw as attorney or agent of record under 37 C.F.R. § 1.36(b), filed January 23, 2012.

The request is **APPROVED**.

A grantable request to withdraw as attorney/agent of record must be signed by every attorney/agent seeking to withdraw or contain a clear indication that one attorney is signing on behalf of another/others.

The request was signed by David N. Weiss on behalf of all attorneys of record who are associated with customer No. 20995. All attorneys/agents associated with the Customer Number 20995 have been withdrawn. Applicant is reminded that there is no attorney of record at this time.

The correspondence address of record has been changed and the new correspondence address is the address indicated below.

There is an outstanding Office action mailed December 21, 2011 that requires a reply from the applicant.

Telephone inquiries concerning this decision should be directed to undersigned at 571-272-1642. All other inquiries concerning the examination or status of this application should be directed to the Technology Center.

/AMW/
April M. Wise
Petitions Examiner
Office of Petitions

cc: ENERGY INNOVATIONS, INC.
14100 DANIELSON STREET
POWAY, CA 92064

UNITED STATES PATENT AND TRADEMARK OFFICE

UNITED STATES DEPARTMENT OF COMMERCE
United States Patent and Trademark Office
Address: COMMISSIONER FOR PATENTS
P.O. Box 1450
Alexandria, Virginia 22313-1450
www.uspto.gov

APPLICATION NUMBER	FILING OR 371(C) DATE	FIRST NAMED APPLICANT	ATTY. DOCKET NO./TITLE
12/914,599	10/28/2010	Nathan Allen	PSPWR.28PPC1

CONFIRMATION NO. 6106

POWER OF ATTORNEY NOTICE

20995
KNOBBE MARTENS OLSON & BEAR LLP
2040 MAIN STREET
FOURTEENTH FLOOR
IRVINE, CA 92614

OC000000052332211

Date Mailed: 02/01/2012

NOTICE REGARDING CHANGE OF POWER OF ATTORNEY

This is in response to the Power of Attorney filed 01/23/2012.

- The withdrawal as attorney in this application has been accepted. Future correspondence will be mailed to the new address of record. 37 CFR 1.33.

/amwise/

Office of Data Management, Application Assistance Unit (571) 272-4000, or (571) 272-4200, or 1-888-786-0101

UNITED STATES PATENT AND TRADEMARK OFFICE

Commissioner for Patents
United States Patent and Trademark Office
P.O. Box 1450
Alexandria, VA 22313-1450
www.uspto.gov

ALLERGAN, INC.
2525 DUPONT DRIVE, T2-7H
IRVINE CA 92612-1599

MAILED
DEC 08 2010
OFFICE OF PETITIONS

In re Application of	:	
Gholam A. Peyman	:	
Application No. 12/914,615	:	ON PETITION
Filed: October 28, 2010		
Attorney Docket No. 18581CON1(AP)	:	
	:	

This is a decision on the petition under 37 CFR 1.102(c)(1), filed October 28, 2010, to make the above-identified application special based on applicant's age as set forth in M.P.E.P. § 708.02, Section IV.

The petition is **GRANTED**.

A grantable petition to make an application special under 37 CFR 1.102(c)(1) and MPEP § 708.02, Section IV: Applicant's Age must be accompanied by evidence showing that at least one of the applicants is 65 years of age, or more, such as a birth certificate or a statement by applicant. No fee is required

The instant petition includes a statement by applicant's attorney that applicant is 65 years of age and a Declaration from applicant that applicant is 65 years of age. Accordingly, the above-identified application has been accorded "special" status.

It is not apparent whether the person signing the instant petition was ever given a power of attorney or authorization of agent to prosecute this patent application. In accordance with 37 CFR 1.34(a), the signature of appearing on the petition shall constitute a representation to the United States Patent and Trademark Office that he/she is authorized to represent the particular party in whose behalf he/she acts.

Telephone inquiries concerning this decision should be directed to the undersigned at 571-272-7751. All other inquiries concerning either the examination or status of the application should be directed to the Technology Center.

This matter is being referred to the Technology Center Art Unit for 1649 for action on the merits commensurate with this decision.

Joan Olszewski

Joan Olszewski
Petitions Examiner
Office of Petitions

UNITED STATES PATENT AND TRADEMARK OFFICE

Commissioner for Patents
United States Patent and Trademark Office
P.O. Box 1450
Alexandria, VA 22313-1450
www.uspto.gov

ALLERGAN, INC.
2525 DUPONT DRIVE, T2-7H
IRVINE, CA 92612-1599

MAILED
FEB 23 2011
OFFICE OF PETITIONS

In re Application of	:	
Gholam A. Peyman.	:	
Application No. 12/914,615	:	DECISION GRANTING PETITION
Filed: October 28, 2010	:	UNDER 37 CFR 1.313(c)(2)
Attorney Docket No. 18581CON1(AP)	:	

This is a decision on the petition under 37 CFR 1.313(c)(2), filed February 22, 2011, to withdraw the above-identified application from issue after payment of the issue fee.

The petition is **GRANTED**.

The above-identified application is withdrawn from issue for consideration of a submission under 37 CFR 1.114 (request for continued examination). *See* 37 CFR 1.313(c)(2).

Petitioner is advised that the issue fee paid on January 19, 2011 cannot be refunded. If, however, this application is again allowed, petitioner may request that it be applied towards the issue fee required by the new Notice of Allowance.[1]

The petition is not signed by an attorney of record. Nevertheless, in accordance with 37 CFR 1.34, the signature of Mr. Joel B. German appearing on the correspondence shall constitute a representation to the United States Patent and Trademark Office that he is authorized to represent the particular party on whose behalf he acts. If Mr. German desires to receive future correspondence regarding this file, the appropriate power of attorney documents must be submitted. All future correspondence regarding this application file will be directed solely to the above-noted correspondence address of record.

Telephone inquiries regarding this decision should be directed to undersigned at (571) 272-1642. All other inquiries concerning the examination or status of this application should be directed to the Technology Center.

[1] *The request to apply the issue fee to the new Notice may be satisfied by completing and returning the new Part B – Fee(s) Transmittal Form (along with any balance due at the time of submission). Petitioner is advised that the Issue Fee Transmittal Form must be completed and timely submitted to avoid abandonment of the application.*

This application is being referred to Technology Center AU 1649 for processing of the request for continued examination under 37 CFR 1.114 and for consideration of the concurrently filed information disclosure statement.

/AMW/
April M. Wise
Petitions Examiner
Office of Petitions

/

UNITED STATES PATENT AND TRADEMARK OFFICE

Commissioner for Patents
United States Patent and Trademark Office
P.O. Box 1450
Alexandria, VA 22313-1450
www.uspto.gov

ALLERGAN, INC.
2525 DUPONT DRIVE, T2-7H
IRVINE, CA 92612-1599

MAILED

MAR 26 2012

OFFICE OF PETITIONS

In re Application of
GholamA. Peyman
Application No. 12/914,615
Filed: October 28, 2010
Attorney Docket No. 18581CON1(AP)

DECISION ON PETITION
TO WITHDRAW
FROM RECORD

This is a decision on the renewed Request to Withdraw as attorney or agent of record under 37 C.F.R. § 1.36(b), filed February 29, 2012.

The request is **NOT APPROVED**.

A grantable request to withdraw as attorney/agent of record must be signed by every attorney/agent seeking to withdraw or contain a clear indication that one attorney is signing on behalf of another/others.

The request cannot be approved because the practitioner(s) requesting the withdrawal have not certified that they (1) have given reasonable notice to the client, prior to the expiration of the response period, that the practitioner(s) intend to withdraw from employment, (2) have delivered to the client or a duly authorized representative of the client all papers and property (including funds) to which the client is entitled, (3) have notified the client of any responses that may be due and the time frame within which the client must respond. The failure to do so may subject the practitioner to discipline. It is also noted that false certification may violate a practitioners' duty under 37 CFR 10.23(b)(4) and (b)(5).

Petitioner should also note that the Office will no longer accept address changes to a new practitioner of law firm filed with a Request, absent the filing of a power of attorney to the new representative. The Office will either change the correspondence address of record to the most current address information provided for the assignee of the entire interest who properly became of record under 37 CFR 3.71 or, the most current address information provided for the first named inventor.

Accordingly, since the request to withdraw from record does not include an acceptable current correspondence address for future communications from the Office, the request cannot be granted at the present time.

All future communications from the Office will continue to be directed to the address of record until otherwise notified by applicant.

Telephone inquiries concerning this decision should be directed to undersigned at 571-272-1642. All other inquiries concerning the examination or status of this application should be directed to the Technology Center.

/AMW/
April M. Wise
Petitions Examiner
Office of Petitions

UNITED STATES PATENT AND TRADEMARK OFFICE

UNITED STATES DEPARTMENT OF COMMERCE
United States Patent and Trademark Office
Address: COMMISSIONER FOR PATENTS
P.O. Box 1450
Alexandria, Virginia 22313-1450
www.uspto.gov

APPLICATION NO.	FILING DATE	FIRST NAMED INVENTOR	ATTORNEY DOCKET NO.	CONFIRMATION NO.
12/914,682	10/28/2010	Kazuhiro SEO	FUK.006.0021.NP	6262

EXAMINER
CARRASQUILLO, JORGE L

ART UNIT	PAPER NUMBER
2837	

MAIL DATE	DELIVERY MODE
03/19/2012	PAPER

7590 03/19/2012
MOTS LAW, PLLC
1629 K STREET N.W.
SUITE 200
WASHINGTON, DC 20006-1635

DECISION GRANTING PETITION UNDER 37 CFR 1.138(d)

The declaration of express abandonment is recognized

This is in response to the petition under 37 CFR 1.138(d), requesting for a refund of any previously paid search fee and excess claims fee in the above-identified application.

The petition is granted.

The express abandonment is recognized. Any previously paid search fee and excess claims fee are hereby refunded.

Telephone inquiries should be directed to the Office of Data Management at (571) 272-4200.

Betty Powell

Patent Publication Branch
Office of Data Management

FORM PET651G (Rev. 08/07)

UNITED STATES PATENT AND TRADEMARK OFFICE

Commissioner for Patents
United States Patent and Trademark Office
P.O. Box 1450
Alexandria, VA 22313-1450
www.uspto.gov

WORKMAN NYDEGGER
1000 EAGLE GATE TOWER
60 EAST SOUTH TEMPLE
SALT LAKE CITY UT 84111

MAILED
JAN 24 2011
OFFICE OF PETITIONS

In re Application of	:	
Dallas W. MEYER	:	
Application No. 12/914,688	:	NOTICE
Filed: October 28, 2010	:	
Attorney Docket No. 15796.8.1.2	:	

This is a notice regarding your request for acceptance of a fee deficiency submission under 37 CFR 1.28. On September 1, 1998, the Court of Appeals for the Federal Circuit held that 37 CFR 1.28(c) is the sole provision governing the time for correction of the erroneous payment of the issue fee as a small entity. **See DH Technology v. Synergystex International, Inc. 154 F.3d 1333, 47 USPQ2d 1865 (Fed. Cir. Sept. 1, 1998).**

The Office no longer investigates or rejects original or reissue applications under 37 CFR 1.56. **1098 Off. Gaz. Pat. Office 502 (January 3, 1989)**. Therefore, nothing in this Notice is intended to imply that an investigation was done.

Your fee deficiency submission under 37 CFR 1.28 is hereby **ACCEPTED**.

This application is no longer entitled to small entity status. Accordingly, all future fees paid in this application must be paid at the large entity rate.

Inquiries related to this communication should be directed to Diane Goodwyn at (571) 272-6735.

Thurman K. Page
Petitions Examiner
Office of Petitions

UNITED STATES PATENT AND TRADEMARK OFFICE

Commissioner for Patents
United States Patent and Trademark Office
P.O. Box 1450
Alexandria, VA 22313-1450
www.uspto.gov

K&L Gates LLP
P.O. Box 1135
CHICAGO IL 60690

MAILED

JUL 08 2011

OFFICE OF PETITIONS

In re Application of: Friederich et al. Application No. 12/914738 Filing or 371(c) Date: 12/24/2008 Title of Invention: MOBILE TERMINAL WITH TWO ANTENNAS FOR REDUCING THE RF RADIATION EXPOSURE OF THE USER	DECISION GRANTING PETITION UNDER 37 CFR 1.47(a)

This is in response to Petition Under 37 CFR 1.47(a), filed May 16, 2011, to allow the other inventor(s) to proceed with the application on behalf of himself or herself and the nonsigning inventor.

The petition is **granted**.

The above-identified application and papers have been reviewed and found in compliance with 37 CFR 1.47(a). This application is hereby accorded Rule 1.47(a) status.

Petitioner has shown that the non-signing inventor, Simon Svendsen, refuses to join in the above-identified application.

As provided in Rule 1.47(a), this Office will forward notice of this application's filing to the non-signing inventor at the addresses given in the Petition. Notice of the filing of this application will also be published in the Official Gazette.

The application file is being referred to the Office of Patent Application Processing for continued processing in the normal course of business.

Telephone inquiries related to this decision may be directed to the undersigned at (571) 272-3232.

/DLW/

Derek L. Woods
Attorney
Office of Petitions

UNITED STATES PATENT AND TRADEMARK OFFICE

Commissioner for Patents
United States Patent and Trademark Office
P.O. Box 1450
Alexandria, VA 22313-1450
www.uspto.gov

MR. SIMON SVENDSEN
SKIVERENVEJ 9
9220 AALBORG OST
DENMARK

MAILED

JUL 08 2011

OFFICE OF PETITIONS

In re Application of:
Friederich et al.
Application No. 12/914738
Filing or 371(c) Date: 12/24/2008
Title of Invention:
MOBILE TERMINAL WITH TWO ANTENNAS FOR REDUCING THE RF RADIATION EXPOSURE OF THE USER

LETTER

Dear Mr. Svendsen:

You are named as a joint inventor in the above-identified United States patent application filed under the provisions of 35 U.S.C. 116 (United States Code) and 37 CFR 1.47(a), Rules of Practice in Patent Cases. Should a patent be granted on the application you will be designated therein as a joint inventor.

As a named inventor you are entitled to inspect any paper in the file wrapper of the application, order copies of all or any part thereof (at a prepaid cost per 37 CFR 1.19) or make your position of record in the application. Alternatively, you may arrange to do any of the preceding through a registered patent attorney or agent presenting written authorization from you. If you care to join the application, counsel of record (see below) would presumably assist you. Joining in the application would entail the filing of an appropriate oath or declaration by you pursuant to 37 CFR 1.63.

Telephone inquiries regarding this communication should be directed to the undersigned at (571) 272-3232. Requests for information regarding your application should be directed to the File Information Unit at (703) 308-2733. Information regarding how to pay for and order a copy of the application, or a specific paper in the application, should be directed to Certification Division at (703) 308-9726 or 1-800-972-6382 (outside the Washington D.C. area).

/DLW/

Derek L. Woods
Attorney
Office of Petitions

CC: K&L Gates LLP
P.O. Box 1135
CHICAGO IL 60690

UNITED STATES PATENT AND TRADEMARK OFFICE

Commissioner for Patents
United States Patent and Trademark Office
P.O. Box 1450
Alexandria, VA 22313-1450
www.uspto.gov

K&L GATES LLP
P.O. BOX 1135
CHICAGO IL 60690

MAILED
AUG 23 2011
OFFICE OF PETITIONS

In re Application of :
Friederich, et al. :
Application No. 12/914,738 : DECISION
Filed: 28 October, 2010 :
Attorney Docket No. 3717483-00096 :

This is a decision on the petition filed on 9 August, 2011, for revival of an application abandoned due to unintentional delay pursuant to 37 C.F.R. §1.137(b) .

The petition pursuant to 37 C.F.R. §1.137(b) is **GRANTED**.

As to the Allegations
of Unintentional Delay

The requirements of a grantable petition pursuant to 37 C.F.R. §1.137(b) are the petition and fee therefor, a reply, a proper statement and/or showing of unintentional delay under the regulation, and, where applicable, a terminal disclaimer and fee

Petitioners' attentions always are directed to the guidance in the Commentary at MPEP §711.03(c)(II).

BACKGROUND

Applicants failed to reply timely and properly to the Notice to File Missing Parts mailed on 15 November, 2010, with reply due absent extension of time on or before 15 January, 2011.

On Monday, 16 May, 2011, Petitioner filed a request and fee for extension of time and an incomplete reply to the Notice of Missing Parts.

The application went abandoned after midnight 15 May, 2011.

It does not appear that the Office mailed the Notice of Abandonment before a petition was filed.

On 9 August, 2011, Petitioner filed, *inter alia*, a petition pursuant to 37 C.F.R. §1.137(b), with fee, a reply in the form of replacement drawings due, and made the statement of unintentional delay.

Petitioners' attentions always are directed to the guidance in the Commentary at MPEP §711.03(c) as to the showing regarding unintentional delay and a petition pursuant to 37 C.F.R. §1.137(b).

The availability of applications and application papers online to applicants/practitioners who diligently associate their Customer Number with the respective application(s) now provides an applicant/practitioner on-demand information as to events/transactions in an application.

Out of an abundance of caution, Petitioners always are reminded that those registered to practice and all others who make representations before the Office **must** inquire into the underlying facts of representations made to the Office and support averments with the appropriate documentation–since all owe to the Office the continuing duty to disclose.[1]

STATUTES, REGULATIONS AND ANALYSIS

Congress has authorized the Commissioner to revive an application if the delay is shown to the satisfaction of the Commissioner to have been "unavoidable." 35 U.S.C. §133 (1994).[2]
The regulations at 37 C.F.R. §1.137(a) and (b) set forth the requirements for a Petitioner to revive a previously unavoidably or unintentionally, respectively, abandoned application under this congressional grant of authority.

Unintentional delays are those that do not satisfy the very strict statutory and regulatory requirements of unavoidable delay, and, by definition, are not intentional.[3]))

As to Allegations of Unintentional Delay

The requirements of a grantable petition pursuant to 37 C.F.R. §1.137(b) are the petition and fee therefor, a reply, a proper statement of unintentional delay under the regulation, and, where applicable, a terminal disclaimer and fee.

---

[1] See supplement of 17 June, 1999. The Patent and Trademark Office is relying on petitioner's duty of candor and good faith and accepting a statement made by Petitioner. See Changes to Patent Practice and Procedure, 62 Fed. Reg. at 53160 and 53178, 1203 Off. Gaz. Pat. Office at 88 and 103 (responses to comments 64 and 109)(applicant obligated under 37 C.F.R. §10.18 to inquire into the underlying facts and circumstances when providing statements to the Patent and Trademark Office).

[2] 35 U.S.C. §133 provides:

35 U.S.C. §133 Time for prosecuting application.

Upon failure of the applicant to prosecute the application within six months after any action therein, of which notice has been given or mailed to the applicant, or within such shorter time, not less than thirty days, as fixed by the Commissioner in such action, the application shall be regarded as abandoned by the parties thereto, unless it be shown to the satisfaction of the Commissioner that such delay was unavoidable.

[3] Therefore, by example, an unintentional delay in the reply might occur if the reply and transmittal form are to be prepared for shipment by the US Postal Service, but other pressing matters distract one's attention and the mail is not timely deposited for shipment.

It appears that the requirements under the rule have been satisfied.

CONCLUSION

Accordingly, the petition pursuant to 37 C.F.R. §1.137(b) is **granted**.

The instant application is released to the Office of Patent Application Processing (OPAP) for further processing in due course.

Petitioner may find it beneficial to view Private PAIR within a fortnight of the instant decision to ensure that the revival has been acknowledged by the OPAP in response to this decision. It is noted that all inquiries with regard to status need be directed to the OPAP where that change of status must be effected—that does not occur in the Office of Petitions.

Telephone inquiries regarding this decision may be directed to the undersigned at (571) 272-3214—it is noted, however , that all practice before the Office is in writing (see: 37 C.F.R. §1.2[4]) and the proper authority for action on any matter in this regard are the statutes (35 U.S.C.), regulations (37 C.F.R.) and the commentary on policy (MPEP). Therefore, no telephone discussion may be controlling or considered authority for Petitioner's action(s).

/John J. Gillon, Jr./
John J. Gillon, Jr.
Senior Attorney
Office of Petitions

[4] The regulations at 37 C.F.R. §1.2 provide:
§1.2 Business to be transacted in writing.
All business with the Patent and Trademark Office should be transacted in writing. The personal attdance of applicants or their attorneys or agents at the Patent and Trademark Office is unnecessary. The action of the Patent and Trademark Office will be based exclusively on the written record in the Office. No attention will be paid to any alleged oral promise, stipulation, or understanding in relation to which there is disagreement or doubt.

UNITED STATES PATENT AND TRADEMARK OFFICE

Commissioner for Patents
United States Patent and Trademark Office
P.O. Box 1450
Alexandria, VA 22313-1450
www.uspto.gov

LEYDIG, VOIT & MAYER LTD.
TWO PRUDENTIAL PLAZA - SUITE 4900
180 NORTH STETSON AVENUE
CHICAGO, IL 60601-6731

MAILED
NOV 10 2011
OFFICE OF PETITIONS

Applicants: Ruben, et al.
Appl. No.: 12/914,741
Filing Date: October 28, 2010
Title: ANTIBODIES THAT IMMUNOSPECIFICALLY BIND TO B LYMPHOCYTE STIMULATOR PROTEIN
Attorney Docket: 706929
Pub. No.: US 2011/0117093 A1
Pub. Date: May 19, 2011

This is a decision on the request for a corrected patent application publication under 37 CFR 1.221(b), received on July 19, 2011, for the above-identified application.

The request is dismissed.

Applicant requests that the application be republished because the patent application publication contains an error in the formatting of Title 1, wherein Table 1 has been altered from "landscape" orientation to "portrait" orientation, resulting in the publication of columns 1-7 of Table 1 on pages 126-154 and the publication of columns 1 and 8-11 of Table 1 on pages 154-183.

37 CFR 1.221 (b) is applicable "only when the Office makes a material mistake which is apparent from Office records.... Any request for a corrected publication or revised patent application publication other than provided as provided in paragraph (a) of this section must be filed within two months from the date of the patent application publication. This period is not extendable." A material mistake must affect the public's ability to appreciate the technical disclosure of the patent application publication, to determine the scope of the patent application publication, or to determine the scope of the provisional rights that an applicant may seek to enforce upon issuance of a patent. [1]

The error noted by requestor is an Office error but it is not a material Office error as defined under 37 CFR 1.221(b). In particular, the error does not affect the public's ability to appreciate the technical disclosure of the patent application, to determine the scope of the patent application

[1] Changes to Implement Eighteen-Month Publication of Patent Applications, 65 FR 57023, 57038 (Sept. 20, 2000), 1239, Off. Gaz. Pat. Office Notices 63, 75 (Oct. 10, 2000) (final rule).

publication, or to determine the scope of the provisional rights that an applicant may seek to enforce upon issuance of a patent.

The applicant is advised that a "request for republication of an application previously published" may be filed under 37 CFR 1.221(a). Such a request for republication "must include a copy of the application compliance with the Office's electronic filing system requirements and be accompanied by the publication fee set forth in § 1.18(d) and the processing fee set forth in § 1.17(i)." If the request for republication does not comply with the electronic filing system requirements, the republication will not take place and the publication fee set forth in § 1.18(d) will be refunded. The processing fee will be retained.

A guide for filing a request for a Pre-Grant Publication, such as a request for republication, may be found on the link below:

http://www.uspto.gov/patents/process/file/efs/guidance/index.jsp

http://www.uspto.gov/ebc/portal/efs/pgpub_quickstart.pdf

Any request for republication under 37 CFR 1.221(a), must be submitted via the EFS system, as a "Pre-Grant Publication".

Inquiries relating to this matter may be directed to Sherry D. Brinkley at (571) 272-3204.

/Christopher Bottorff/

Christopher Bottorff
Petitions Examiner
Office of Petitions

UNITED STATES PATENT AND TRADEMARK OFFICE

Commissioner for Patents
United States Patent and Trademark Office
P.O. Box 1450
Alexandria, VA 22313-1450
www.uspto.gov

MAILED
MAY 27 2011
OFFICE OF PETITIONS

DOCKET CLERK
P.O. DRAWER 800889
DALLAS, TX 75380

In re Application of	:	
Ying Li, et al.	:	DECISION REFUSING STATUS
Application No. 12/914,755	:	UNDER 37 CFR 1.47(a)
Filed: October 28, 2010	:	
Attorney Docket No.: 2009.11.024.WS0	:	

This is in response to the petition under 37 CFR 1.47(a), filed April 18, 2011.

The petition is DISMISSED.

Rule 47 applicant is given TWO MONTHS from the mailing date of this decision to reply, correcting the below-noted deficiencies. Any reply should be entitled "Request for Reconsideration of Petition Under 37 CFR 1.47(a)," and should only address the deficiencies noted below, except that the reply may include an oath or declaration executed by the non-signing inventor. **FAILURE TO RESPOND WILL RESULT IN ABANDONMENT OF THE APPLICATION.** Any extensions of time will be governed by 37 CFR 1.136(a).

The above-identified application was filed on October 28, 2010, without an executed oath or declaration. Accordingly, on November 10, 2010, a Notice to File Missing Parts of Nonprovisional Application was mailed, requiring, *inter alia*, an executed oath or declaration, including a surcharge for its late filing. A two (2) month period for reply was set. In response, on April 18, 2011, applicant filed an appropriate extension of time and fee, the $330 basic filing fee, $540 search fee, $220 examination fee, $428 additional claim fees and the present petition, including the $200 petition fee, a partially executed declaration and the $130 surcharge.

A grantable petition under 37 CFR 1.47(a) requires: (1) proof that the non-signing inventor cannot be reached or refuses to sign the oath or declaration after having been presented with the application papers (specification, claims and drawings); (2) an acceptable oath or declaration in compliance with 35 U.S.C. §§ 115 and 116; (3) the petition fee; and (4) a statement of the last known address of the non-signing inventor. The petition does not comply with item (1).

As to item (1), the applicable statute (35 U.S.C. § 116) requires that a "diligent effort" have been expended in attempting to find or reach the non-signing inventor. *See* MPEP 409.03(a). The showing currently fails to demonstrate, with a documented showing, that a diligent effort was

made to find or locate non-signing inventor Baowei Ji, such that the declaration can be accepted under 37 CFR 1.47(a).

Petitioner indicates that complete application papers were sent by certified mail to Mr. Ji at his last known address on December 30, 2010 and March 11, 2011; however, neither package was claimed at the Post Office, despite the fact that a notice was sent to Mr. Ji on three separate occasion requesting that the package be picked up. Accordingly, there's a question as to the reliability of the last known address used.

At present, petitioner has not demonstrated that all efforts were expended in trying to locate the non-signing inventor. Petitioner should attempt to determine the last known address for the non-signing inventor. Petitioner may show diligent efforts by use of the Internet, a national registry or other database to determine a current address for the non-signing inventors. Details of the efforts taken to determine the inventor's last known address should be provided with any renewed petition. *See* MPEP 409.03(d). If a more recent address is discovered, petitioners should send or give a copy of the application papers to the inventor at that address, return receipt requested.

If the papers are returned and all other attempts to locate or reach the inventor, e.g., through personnel records, co-workers, E-mail, the Internet or the telephone, etc., continue to fail, then applicant will have established that the inventor cannot be reached after diligent effort or has refused to join in the application. **The statements of facts must be signed, where at all possible, by a person having firsthand knowledge of the facts recited therein and should be accompanied by documentary evidence in support of the statement of facts.** It is important that the forthcoming communication contain statements of fact as opposed to conclusions.

Where there is an express or oral refusal, that fact, along with the time and place of the refusal, must be stated in an affidavit or declaration by the party to whom the refusal was made. Where there is a written refusal, a copy of the document(s) evidencing that refusal must be made part of the affidavit or declaration.

When it is concluded by the rule that an omitted inventor's conduct constitutes a refusal, all facts upon which that conclusion is based should be stated in an affidavit or declaration. If there is documentary evidence to support facts alleged in the affidavit or declaration, such evidence must be submitted.

Further correspondence with respect to this matter should be delivered through one of the following mediums:

By mail: Mail Stop PETITIONS
Commissioner for Patents
Post Office Box 1450
Alexandria, VA 22313-1450

By hand: Customer Service Window
Mail Stop Petitions
Randolph Building
401 Dulany Street
Alexandria, VA 22314

By fax: (571) 273-8300
ATTN: Office of Petitions

By internet: EFS-Web[1]

Telephone inquiries should be directed to the undersigned at (571) 272-3204.

/SDB/

Sherry D. Brinkley
Petitions Examiner
Office of Petitions

[1] www.uspto.gov/ebc/efs_help.html (for help using EFS-Web call the Patent Electronic Business Center at (866) 217-9197)

UNITED STATES PATENT AND TRADEMARK OFFICE

Commissioner for Patents
United States Patent and Trademark Office
P.O. Box 1450
Alexandria, VA 22313-1450
www.uspto.gov

DOCKET CLERK
P.O. DRAWER 800889
DALLAS, TX 75380

MAILED
SEP 30 2011
OFFICE OF PETITIONS

In re Application of	:	
Ying Li, et al.	:	DECISION NOTING JOINDER OF
Application No. 12/914,755	:	INVENTOR AND PETITION
Filed: October 28, 2010	:	UNDER 37 CFR 1.47(a)
Attorney Docket No. 2009.11.024.WS0	:	

Papers filed on December 23, 2011 in response to a "Decision Refusing Status Under 37 CFR 1.47(a)," mailed May 26, 2011, included a Declaration signed by a previously non-signing inventor, Baowei Ji, in compliance with 37 CFR 1.63.

The petition under 37 CFR 1.47(a) is **DISMISSED AS MOOT**.

In view of the joinder of the inventor, further consideration under § 1.47(a) is not necessary. This application does not have any Rule 1.47 status and no such status should appear on the record for this file. This application need not be returned to this Office for any further consideration under 37 CFR 1.47(a).

This application is being referred to the Office of Patent Application Processing (OPAP) for further processing using the declaration filed September 23, 2011.

Telephone inquiries related to this decision should be directed to the undersigned at (571) 272-3204. Telephone inquiries related to processing at OPAP should be directed to their hotline at (571) 272-400.

/SDB/

Sherry D. Brinkley
Petitions Examiner
Office of Petitions

Doc Code: PET.GREEN
Document Description: Petition for Green Tech Pilot

PTO/SB/420 (11-10)
Approved for use through 01/31/2011. OMB 0651-0062
U.S. Patent and Trademark Office; U. S. DEPARTMENT OF COMMERCE
Under the Paperwork Reduction Act of 1995, no persons are required to respond to a collection of information unless it displays a valid OMB control number.

PETITION TO MAKE SPECIAL UNDER THE GREEN TECHNOLOGY PILOT PROGRAM

Attorney Docket Number: CEP10302	Application Number (if known): 12/914,793	Filing date: October 28, 2010
First Named Inventor: Bob Sorensen		
Title: RADIATIVE HEAT TRANSFER VIA SHUNT IN A STEAM REFORMING REACTOR		

APPLICANT HEREBY REQUESTS TO PARTICIPATE IN THE GREEN TECHNOLOGY PILOT PROGRAM FOR THE ABOVE-IDENTIFIED APPLICATION. **See Instruction Sheet on page 2.**

This petition must be timely filed electronically using the USPTO electronic filing system, EFS-Web.

1. By filing this petition:

   Applicant is requesting early publication: Applicant hereby requests early publication under 37 CFR 1.219 and the publication fee set forth in 37 CFR 1.18(d) accompanies this request.

2. By filing this petition: applicant is agreeing to make an election without traverse in a telephonic interview and elect an invention that meets the eligibility requirements for the Green Technology Pilot Program, if the Office determines that the claims are not obviously directed to a single invention. See Instruction Sheet.

3. This request is accompanied by statements of special status for the eligibility requirement.

4. The application contains no more than three (3) independent claims and twenty (20) total claims.

5. The application does not contain any multiple dependent claims.

6. Other attachments: _____

Signature /John D. Russell/	Date April 25, 2011
Name (Print/Typed) John D. Russell	Registration Number 47,048

Note: *Signatures of all the inventors or assignees of record of the entire interest or their representative(s) are required in accordance with 37 CFR 1.33 and 11.18. Please see 37 CFR 1.4(d) for the form of the signature. If necessary, submit multiple forms for more than one signature see below*.*

☒ *Total of 1 forms are submitted.

The information is required to obtain or retain a benefit by the public which is to file (and by the USPTO to process) an application. Confidentiality is governed by 35 U.S.C. 122 and 37 CFR 1.11 and 1.14. This collection is estimated to take 12 hours to complete, including gathering, preparing, and submitting the completed application form to the USPTO. Time will vary depending upon the individual case. Any comments on the amount of time you require to complete this form and/or suggestions for reducing this burden, should be sent to the Chief Information Officer, U.S. Patent and Trademark Office, U.S. Department of Commerce, P.O. Box 1450, Alexandria, VA 22313-1450. DO NOT SEND FEES OR COMPLETED FORMS TO THIS ADDRESS. **SEND TO: Commissioner for Patents, P.O. Box 1450, Alexandria, VA 22313-1450.**

If you need assistance in completing the form, call 1-800-PTO-9199 and select option 2.

IN THE UNITED STATES PATENT AND TRADEMARK OFFICE

Applicants	:	Bob Sorensen et al.
Application No.	:	12/914,793
Filed	:	October 28, 2010
Title	:	RADIATIVE HEAT TRANSFER VIA SHUNT IN A STEAM REFORMING REACTOR
Group Art Unit	:	1774
Confirmation No.	:	6476
Docket No.	:	CEP10302

Commissioner for Patents
P.O. Box 1450
Alexandria, VA 22313-1450

CERTIFICATE OF TRANSMISSION

I hereby certify that this correspondence is being transmitted via the U.S. Patent and Trademark Office electronic filing system (EFS-Web) to the USPTO on:

April 25, 2011	/Angie C. Farr/
Date	Angie C. Farr

STATEMENTS OF SPECIAL STATUS

Applicants respectfully request consideration of the following statement concerning the basis for the special status as well as the following statement pertaining to the materiality standard.

I. Statement concerning the basis for special status.

Applicants submit that special status is sought on the following bases: the claimed invention materially contributes to the more efficient utilization and conservation of energy resources.

II. Statement pertaining to the materiality standard.

As a preliminary matter, Applicants note that the following statement refers explicitly to the elements of independent claim 1, which is the broadest claim in many respects.

Applicants submit that the claimed invention materially contributes to the more efficient utilization and conservation of energy resources by conserving fossil fuels. Specifically, the claimed invention increases the amount of hydrogen produced by a reformer. As explained in the Background and Summary of the subject application,

methane steam reformers can produce hydrogen for use as fuel to produce energy in a fuel cell. The reformer utilizes a catalyst and high temperatures to produce hydrogen from steam and methane. This reaction is endothermic and thus requires a heat source to maintain a temperature range under which the reaction can occur. Further, as methane is converted, the partial pressure of methane decreases as the gases travel through the reactor. As such, a higher temperature is needed for the reaction to occur farther from an inlet of the reactor than for the reaction to occur closer to an inlet of the reactor.

Thus, a heater may be coupled to a portion of an outer wall of a reactor in order to heat the reactor to temperatures necessary for methane conversion along a length of the reactor. Due to low convective transport coefficients within the reactor, heat is transferred mainly via radiation. The reforming reaction immediately uses this energy in the vicinity of the outer wall, such that less energy is available to heat the inside of the reactor at locations farther from the outer wall. This may result in a low temperature zone spaced from the outer wall of the reactor. Since a higher temperature is needed for conversion in portions of the reactor closer to the outlet of the reactor due to the low partial pressure of methane in these portions of the reactor, the low temperature zone may result in elevated methane slip (e.g., un-reacted methane leaving the reactor), thereby decreasing the efficiency of the reactor. The claimed invention addresses this issue by providing a heating shunt to radiate heat to locations farther from the outer wall of the reactor. For example, claim 1 recites:

> A steam reforming reactor, comprising:
> a reaction chamber comprising an interior surface;
> a packing material located within the reaction chamber; and
> a radiative heating shunt extending from the interior surface into the reaction chamber, the radiative heating shunt comprising a porous partition enclosing a sub-volume of the reaction chamber bounded by the porous partition and a portion of the interior surface, the sub-volume being at least partly free of packing material such that radiative energy has a path from the interior surface wall to a distal portion of the porous partition that is unobstructed by packing material.

Thus, the radiative heat shunt may help to improve radiative heat transfer to locations in a reactor spaced from a radiative heat source relative to a reactor with no shunt. This may help to drive a reaction in the vicinity of the radiative heating shunt toward the formation of more products compared to the same region of the reactor in the

absence of the shunt. By forming more hydrogen for use in a fuel cell, the use of the fuel cell can be increased, and more energy can be produced without combusting fossil fuels.

In this way, the claimed invention not only enables more efficient generation of hydrogen for the fuel cell, but also conserves fossil fuels both through the use of a fuel cell and through the more efficient operation of the fuel cell.

Please charge any cost incurred in this filing, along with any other costs, to Deposit Account No. 50-3397.

Respectfully submitted,

ALLEMAN HALL MCCOY RUSSELL & TUTTLE LLP

/John D. Russell/
John D. Russell
Registration No. 47,048
Customer No. 50488
Attorney/Agent for Applicants/Assignee
806 S.W. Broadway, Suite 600
Portland, Oregon 97205
Telephone: (503) 459-4141
Facsimile: (503) 459-4142

UNITED STATES PATENT AND TRADEMARK OFFICE

UNITED STATES DEPARTMENT OF COMMERCE
United States Patent and Trademark Office
Address: COMMISSIONER FOR PATENTS
P.O. Box 1450
Alexandria, Virginia 22313-1450
www.uspto.gov

APPLICATION NO.	FILING DATE	FIRST NAMED INVENTOR	ATTORNEY DOCKET NO.	CONFIRMATION NO.
12/914,793	10/28/2010	Bob Sorensen	CEP10302	6476

50488 7590 05/25/2011
ALLEMAN HALL MCCOY RUSSELL & TUTTLE LLP
806 SW BROADWAY
SUITE 600
PORTLAND, OR 97205-3335

EXAMINER

ART UNIT	PAPER NUMBER
1774	

MAIL DATE	DELIVERY MODE
05/25/2011	PAPER

Please find below and/or attached an Office communication concerning this application or proceeding.

The time period for reply, if any, is set in the attached communication.

Best Available Copy

UNITED STATES PATENT AND TRADEMARK OFFICE

Commissioner for Patents
United States Patent and Trademark Office
P.O. Box 1450
Alexandria, VA 22313-1450
www.uspto.gov

ALLEMAN HALL MCCOY RUSSELL & TUTTLE LLP
806 SW BROADWAY
SUITE 600
PORTLAND OR 97205-3335

MAY 25 2011

In re Application of	:	
Sorensen et al.	:	DECISION ON PETITION
Application No. 12/914,793	:	TO MAKE SPECIAL UNDER
Filed: 10/28/2010	:	THE GREEN TECHNOLOGY
Attorney Docket No. **CEP10302**	:	PILOT PROGRAM

This is a decision on the petition under 37 CFR 1.102, filed 4/25/2011, to make the above-identified application special under the pilot program for applications pertaining to Green Technologies as set forth in 74 Federal Register Notice 64666 (December 8, 2009) and amended by 75 Federal Register Notice 28554 (May 21, 2010) and 75 Federal Register Notice 69049 (November 10, 2010).

The petition is **GRANTED**.

A grantable petition to make an application special under 37 CFR 1.102 and the pilot program as set forth in 74 FR 64666 must be directed to a nonprovisional application filed under 35 USC 111(a) or be a national stage entry under 35 USC 371, exclusive of any reissue applications.

In order to qualify for special status, the following requirements must be met. 1) The application must have no more than 3 independent claims and no more than 20 total claims. 2) The application must not contain any multiple dependent claims. 3) The petition must state the basis for seeking special status, i.e., the claimed invention either: A) materially enhances the quality of the environment or B) materially contributes to: i) the discovery or development of renewable energy resources, ii) the more efficient utilization and conservation of energy resources, or iii) greenhouse gas emission reduction. 4) If the disclosure is not clear on its face that the claimed invention materially contributes under category (A) or (B), the petition must be accompanied by a statement by the applicant, assignee, or an attorney/agent registered to practice before the Office explaining how the materiality standard is met. 5) A statement that applicant will agree to make an election without traverse in a telephonic interview if a restriction requirement is made by the examiner. 6) The petition to make special must be filed electronically. 7) The petition must be filed at least one day prior to the date that a first Office Action appears in the Patent Application Information Retrieval (PAIR) system. 8) The petition must be accompanied by a

request for early publication in compliance with 37 CFR 1.219 and include the publication fee as set forth in 37 CFR 1.18(d).

The requirement for a fee for consideration of the petition to make special for applications pertaining to Green Technologies has been waived.

The instant petition complies with items 1 – 8 above. Accordingly, the above-identified application has been accorded "special" status.

Telephone inquires concerning this decision should be directed to Tom Dunn at 571-272-1171.

The application is being forwarded to the Technology Center Art Unit 1774 for action on the merits commensurate with this decision.

/Tom Dunn/

Tom Dunn
Quality Assurance Specialist
Technology Center 1700

Doc Code: PET.GREEN
Document Description: Petition for Green Tech Pilot

PTO/SB/420 (11-10)
Approved for use through 01/31/2011. OMB 0651-0062
U.S. Patent and Trademark Office; U. S. DEPARTMENT OF COMMERCE
Under the Paperwork Reduction Act of 1995, no persons are required to respond to a collection of information unless it displays a valid OMB control number.

PETITION TO MAKE SPECIAL UNDER THE GREEN TECHNOLOGY PILOT PROGRAM

Attorney Docket Number: CEP10303	Application Number (if known): 12/914,810	Filing date: October 28, 2010
First Named Inventor: Bob Sorensen		
Title: RADIATIVE HEAT TRANSFER VIA FINS IN A STEAM REFORMER		

APPLICANT HEREBY REQUESTS TO PARTICIPATE IN THE GREEN TECHNOLOGY PILOT PROGRAM FOR THE ABOVE-IDENTIFIED APPLICATION. See Instruction Sheet on page 2.

This petition must be timely filed electronically using the USPTO electronic filing system, EFS-Web.

1. By filing this petition:

   Applicant is requesting early publication: Applicant hereby requests early publication under 37 CFR 1.219 and the publication fee set forth in 37 CFR 1.18(d) accompanies this request.

2. By filing this petition: applicant is agreeing to make an election without traverse in a telephonic interview and elect an invention that meets the eligibility requirements for the Green Technology Pilot Program, if the Office determines that the claims are not obviously directed to a single invention. See Instruction Sheet.

3. This request is accompanied by statements of special status for the eligibility requirement.

4. The application contains no more than three (3) independent claims and twenty (20) total claims.

5. The application does not contain any multiple dependent claims.

6. Other attachments: _____

Signature	Date February 10, 2011
Name (Print/Typed) John D. Russell	Registration Number 47,048

Note: *Signatures of all the inventors or assignees of record of the entire interest or their representative(s) are required in accordance with 37 CFR 1.33 and 11.18. Please see 37 CFR 1.4(d) for the form of the signature. If necessary, submit multiple forms for more than one signature see below*.*

☒ *Total of 1 forms are submitted.

The information is required to obtain or retain a benefit by the public which is to file (and by the USPTO to process) an application. Confidentiality is governed by 35 U.S.C. 122 and 37 CFR 1.11 and 1.14. This collection is estimated to take 12 hours to complete, including gathering, preparing, and submitting the completed application form to the USPTO. Time will vary depending upon the individual case. Any comments on the amount of time you require to complete this form and/or suggestions for reducing this burden, should be sent to the Chief Information Officer, U.S. Patent and Trademark Office, U.S. Department of Commerce, P.O. Box 1450, Alexandria, VA 22313-1450. DO NOT SEND FEES OR COMPLETED FORMS TO THIS ADDRESS. **SEND TO: Commissioner for Patents, P.O. Box 1450, Alexandria, VA 22313-1450.**

If you need assistance in completing the form, call 1-800-PTO-9199 and select option 2.

IN THE UNITED STATES PATENT AND TRADEMARK OFFICE

Applicants	:	Bob Sorensen et al.
Application No.	:	12/914,810
Filed	:	October 28, 2010
Title	:	RADIATIVE HEAT TRANSFER VIA FINS IN A STEAM REFORMER
Group Art Unit	:	1727
Confirmation No.	:	6505
Docket No.	:	CEP10303

Commissioner for Patents
P.O. Box 1450
Alexandria, VA 22313-1450

CERTIFICATE OF TRANSMISSION

I hereby certify that this correspondence is being transmitted via the U.S. Patent and Trademark Office electronic filing system (EFS-Web) to the USPTO on:

February 10, 2011
Date

Caitlin Fackrell
Caitlin Fackrell

STATEMENTS OF SPECIAL STATUS

Applicants respectfully request consideration of the following statement concerning the basis for the special status as well as the following statement pertaining to the materiality standard.

I. Statement concerning the basis for special status.

Applicants submit that special status is sought on the following basis: the claimed invention materially contributes to the more efficient utilization and conservation of energy resources.

II. Statement pertaining to the materiality standard.

As a preliminary matter, Applicants note that the following statement refers explicitly to the elements of independent claim 1, which is the broadest claim.

Applicants submit that the claimed invention materially contributes to the more efficient utilization and conservation of energy resources by conserving fossil fuels. Specifically, the claimed invention increases the amount of hydrogen produced by a

reformer. As explained in the Background and Summary of the subject application, methane steam reformers can produce hydrogen for use as fuel to produce energy in a fuel cell. The reformer utilizes a catalyst and high temperatures to produce hydrogen from steam and methane. This reaction is endothermic and thus requires a heat source to maintain a temperature range under which the reaction can occur. In some examples, the steam reformer may include a burner outside of a reactor which heats the reactor and is fueled by the reformate. The claimed invention increases the efficiency by which the heat is delivered. For example, claim 1 recites:

> A steam reformer, comprising:
>
> an exterior shell which includes a diffusion burner and angled fins, the angled fins extending away from an inner surface of the exterior shell and downward toward the diffusion burner; and
>
> an interior reactor positioned at least partly within the exterior shell.

That is, a steam reformer is provided comprising an exterior shell which includes a diffusion burner and angled fins, the angled fins extending away from an inner surface of the exterior shell and downward toward the diffusion burner. The steam reformer further comprises an interior reactor positioned at least partly within the exterior shell. In this way, the angled fins behave as a baffle to direct flow of the combustion gases (e.g., burning hydrogen) and as thermal radiation emitters. As such, an amount of heat transferred to the interior reactor may be at least partially controlled by a position, angle, and length of each angled fin coupled to an inner surface of the exterior shell. By controlling the amount of heat transferred to the interior reactor, a reforming reaction which occurs within the interior reactor may be driven toward the formation of more products. By forming more hydrogen for use in a fuel cell, the use of the fuel cell can be increased, and more energy can be produced without combusting fossil fuels.

In this way, the claimed invention not only enables more efficient generation of hydrogen for the fuel cell, but also conserves fossil fuels both through the use of a fuel cell and through the more efficient operation of the fuel cell.

Please charge any cost incurred in this filing, along with any other costs, to Deposit Account No. 503397.

Respectfully submitted,

ALLEMAN HALL MCCOY RUSSELL & TUTTLE LLP

John D. Russell
Registration No. 47,048
Customer No. 50488
Attorney/Agent for Applicants/Assignee
806 S.W. Broadway, Suite 600
Portland, Oregon 97205
Telephone: (503) 459-4141
Facsimile: (503) 459-4142

UNITED STATES PATENT AND TRADEMARK OFFICE

UNITED STATES DEPARTMENT OF COMMERCE
United States Patent and Trademark Office
Address: COMMISSIONER FOR PATENTS
P.O. Box 1450
Alexandria, Virginia 22313-1450
www.uspto.gov

APPLICATION NO.	FILING DATE	FIRST NAMED INVENTOR	ATTORNEY DOCKET NO.	CONFIRMATION NO.
12/914,810	10/28/2010	Bob Sorensen	CEP10303	6505

50488 7590 02/16/2011
ALLEMAN HALL MCCOY RUSSELL & TUTTLE LLP
806 SW BROADWAY
SUITE 600
PORTLAND, OR 97205-3335

EXAMINER
BEST, ZACHARY P

ART UNIT	PAPER NUMBER
1727	

MAIL DATE	DELIVERY MODE
02/16/2011	PAPER

Please find below and/or attached an Office communication concerning this application or proceeding.

The time period for reply, if any, is set in the attached communication.

UNITED STATES PATENT AND TRADEMARK OFFICE

Commissioner for Patents
United States Patent and Trademark Office
P.O. Box 1450
Alexandria, VA 22313-1450
www.uspto.gov

ALLEMAN HALL MCCOY RUSSELL & TUTTLE LLP
806 SW BROADWAY
SUITE 600
PORTLAND OR 97205-3335

2/16/2011

In re Application of	:	
Sorensen et al.	:	DECISION ON PETITION
Application No. 12/914,810	:	TO MAKE SPECIAL UNDER
Filed: 10/28/2010	:	THE GREEN TECHNOLOGY
Attorney Docket No. **CEP10303**	:	PILOT PROGRAM

This is a decision on the petition under 37 CFR 1.102, filed 2/10/2011, to make the above-identified application special under the pilot program for applications pertaining to Green Technologies as set forth in 74 Federal Register Notice 64666 (December 8, 2009) and amended by 75 Federal Register Notice 28554 (May 21, 2010) and 75 Federal Register Notice 69049 (November 10, 2010).

The petition is **GRANTED**.

A grantable petition to make an application special under 37 CFR 1.102 and the pilot program as set forth in 74 FR 64666 must be directed to a nonprovisional application filed under 35 USC 111(a) or be a national stage entry under 35 USC 371, exclusive of any reissue applications.

In order to qualify for special status, the following requirements must be met. 1) The application must have no more than 3 independent claims and no more than 20 total claims. 2) The application must not contain any multiple dependent claims. 3) The petition must state the basis for seeking special status, i.e., the claimed invention either: A) materially enhances the quality of the environment or B) materially contributes to: i) the discovery or development of renewable energy resources, ii) the more efficient utilization and conservation of energy resources, or iii) greenhouse gas emission reduction. 4) If the disclosure is not clear on its face that the claimed invention materially contributes under category (A) or (B), the petition must be accompanied by a statement by the applicant, assignee, or an attorney/agent registered to practice before the Office explaining how the materiality standard is met. 5) A statement that applicant will agree to make an election without traverse in a telephonic interview if a restriction requirement is made by the examiner. 6) The petition to make special must be filed electronically. 7) The petition must be filed at least one day prior to the date that a first Office Action appears in the Patent Application Information Retrieval (PAIR) system. 8) The petition must be accompanied by a

request for early publication in compliance with 37 CFR 1.219 and include the publication fee as set forth in 37 CFR 1.18(d).

The requirement for a fee for consideration of the petition to make special for applications pertaining to Green Technologies has been waived.

The instant petition complies with items 1 – 8 above. Accordingly, the above-identified application has been accorded "special" status.

Telephone inquires concerning this decision should be directed to Tom Dunn at 571-272-1171.

The application is being forwarded to the Technology Center Art Unit 1727 for action on the merits commensurate with this decision.

/Tom Dunn/

Tom Dunn
Quality Assurance Specialist
Technology Center 1700

UNITED STATES PATENT AND TRADEMARK OFFICE

Commissioner for Patents
United States Patent and Trademark Office
P.O. Box 1450
Alexandria, VA 22313-1450
www.uspto.gov

MAILED
APR 28 2011
OFFICE OF PETITIONS

ASHOK K. JANAH
650 DELANCEY STREET, SUITE 106
SAN FRANCISCO, CA 94107

In re Application of	:	
Dustin W. Ho, Juan Carlos Rocha-Alvarez	:	
And Hichem M'Saad	:	
Application No. 12/914,822	:	DECISION REFUSING STATUS
Filed: October 28, 2010	:	UNDER 37 CFR 1.47(a)
Attorney Docket No.: 012176	:	
USA/DSM/BCVD/JW	:	

This is a decision in response to the petition, filed March 14, 2011, under the provisions of 37 CFR 1.47(a).

The petition is DISMISSED.

Rule 47 applicant is given TWO MONTHS from the mailing date of this decision to reply, correcting the below-noted deficiencies. Any reply should be entitled "Request for Reconsideration of Petition Under 37 CFR 1.47(a)," and should only address the deficiencies noted below, except that the reply may include an oath or declaration executed by the non-signing inventor. **FAILURE TO RESPOND WILL RESULT IN ABANDONMENT OF THE APPLICATION.** Any extensions of time will be governed by 37 CFR 1.136(a).

The above-identified application was filed on October 28, 2010, without an executed oath or declaration. Accordingly, on November 12, 2010, a Notice to File Missing Parts of Nonprovisional Application was mailed, requiring an executed oath or declaration and a surcharge for its late filing. A two (2) month period for reply was set.

In response, rule 47 applicants filed the instant petition, including an appropriate extension of time and fee, the petition fee, surcharge and a declaration executed by joint inventor Rocha-Alvarez. On petition, applicants assert that status under § 1.47(a) is proper because inventors Ho and M'Saad have failed to execute the declaration with respect to the present application.

A grantable petition under 37 CFR 1.47(a) requires: (1) proof that the non-signing inventor cannot be reached or refuses to sign the oath or declaration after having been presented with the application papers (specification, claims and drawings); (2) an acceptable oath or declaration in compliance with 35 U.S.C. §§ 115 and 116; (3) the petition fee; and (4) a statement of the last known address of the non-signing inventor. The petition lacks item (1).

Rule 47 applicant must demonstrate with documented evidence that an inventor refuses to join in the application after having been presented with the application papers (specification, claims, drawings and oath or declaration). There is no indication herein that joint inventors Ho and M'Saad were presented with a copy of the complete application papers for this application.

Before a refusal to sign an oath or declaration can be alleged, it must be demonstrated that a *bona fide* effort has been made to present a complete copy of the application papers (specification, including claims, drawings, and oath or declaration) to the non-signing inventors at the non-signing inventors' last know address.

From the evidence of record, it appears that only the declaration was mailed to the joint inventors at their respective mailing addresses. If the joint inventors were not presented with a complete copy of the application papers (specification, claims and drawings) for this application, then they could not attest that they have "reviewed and understand the application papers" and could not execute the declaration they were requested to sign. Did the inventors receive a complete copy of the application papers? The fact that an application may contain proprietary information does not relieve the rule 47 applicant of the responsibility to present the application papers to the joint inventors if the inventors are willing to receive the papers in order to sign the oath or declaration.

Unless petitioner can show that a copy of the application papers was presented to the non-signing inventors, then petitioner will have to mail a copy of the complete application papers (specification, claims and drawings) to the last known address of joint inventors Ho and M'Saad, return receipt requested. A cover letter of instructions should accompany the mailing of the application papers setting a deadline or a statement that no response will constitute a refusal. This sort of ultimatum lends support to a finding of refusal by conduct. If the papers are returned and all other attempts to locate or reach the inventor, e.g., through personnel records, co-workers, E-mail, the Internet or the telephone, etc., continue to fail, then applicant will have established that the inventors cannot be reached after diligent effort or have refused to join in the application. **The proof of the pertinent events should be made by a statement of someone with firsthand knowledge of the events and should include documentary evidence, such as certified mail return receipt, cover letter of instructions, telegram, etc.** *See* MPEP 409.03(d).

Where there is an express or oral refusal, that fact, along with the time and place of the refusal, must be stated in an affidavit or declaration **by the party to whom the refusal was made.** Where there is a written refusal, a copy of the document(s) evidencing that refusal must be made part of the affidavit or declaration.

When it is concluded by the rule 47 applicant that an omitted inventor's conduct constitutes a refusal, all facts upon which that conclusion is based should be stated in an affidavit or declaration. If there is documentary evidence to support facts alleged in the affidavit or declaration, such evidence must be submitted.

Whenever an omitted inventor gives a reason for refusing to sign the application oath or declaration, that reason should be stated in the affidavit or declaration.

Further correspondence with respect to this matter should be delivered through one of the following mediums:

By mail:	Mail Stop PETITIONS Commissioner for Patents Post Office Box 1450 Alexandria, VA 22313-1450
By hand:	Customer Service Window Mail Stop Petitions Randolph Building 401 Dulany Street Alexandria, VA 22314
By fax:	(571) 273-8300 ATTN: Office of Petitions
By internet:	EFS-Web[1]

Any questions concerning this matter may be directed to the undersigned at (571) 272-3204.

/SDB/

Sherry D. Brinkley
Petitions Examiner
Office of Petitions

[1] www.uspto.gov/ebc/efs_help.html (for help using EFS-Web call the Patent Electronic Business Center at (866) 217-9197)

UNITED STATES PATENT AND TRADEMARK OFFICE

Commissioner for Patents
United States Patent and Trademark Office
P.O. Box 1450
Alexandria, VA 22313-1450
www.uspto.gov

ASHOK K. JANAH
650 DELANCEY STREET, SUITE 106
SAN FRANCISCO, CA 94107

MAILED
JUN 30 2011
OFFICE OF PETITIONS

In re Application of	:	
Dustin W. Ho, et al.	:	DECISION NOTING JOINDER OF
Application No. 12/914,822	:	INVENTOR AND PETITION
Filed: October 28, 2010	:	UNDER 37 CFR 1.47(a)
Attorney Docket No.: 012176	:	
USA/DSM/BCVD/JW	:	

Papers filed on May 11, 2011 in response to a "Decision Refusing Status Under 37 CFR 1.47(a)," mailed April 28, 2011, included a Declaration signed by a previously non-signing inventors, Dustin W. Ho and Hichem M'Saad, in compliance with 37 CFR 1.63.

Accordingly, the petition under 37 CFR 1.47(a) is **DISMISSED AS MOOT**.

In view of the joinder of the inventors, further consideration under § 1.47(a) is not necessary. This application does not have any Rule 1.47 status and no such status should appear on the record for this file. This application need not be returned to this Office for any further consideration under 37 CFR 1.47(a).

The application is being referred to the Office of Patent Application Processing (OPAP) for further pre-examination processing.

Telephone inquires related to this decision should be directed to the undersigned at (571) 272-3204. Telephone inquiries related to processing at OPAP should be directed to their hotline at (571) 272-4000.

/SDB/

Sherry D. Brinkley
Petitions Examiner
Office of Petitions

UNITED STATES PATENT AND TRADEMARK OFFICE

UNITED STATES DEPARTMENT OF COMMERCE
United States Patent and Trademark Office
Address: COMMISSIONER FOR PATENTS
P.O. Box 1450
Alexandria, Virginia 22313-1450
www.uspto.gov

APPLICATION NO.	FILING DATE	FIRST NAMED INVENTOR	ATTORNEY DOCKET NO.	CONFIRMATION NO.
12/914,834	10/28/2010	Christopher F. Lategan	ADBL-1-2402	6552

25315 7590 10/12/2011
LOWE GRAHAM JONES, PLLC
701 FIFTH AVENUE
SUITE 4800
SEATTLE, WA 98104

EXAMINER
HWANG, JOON H

ART UNIT	PAPER NUMBER
2447	

NOTIFICATION DATE	DELIVERY MODE
10/12/2011	ELECTRONIC

Please find below and/or attached an Office communication concerning this application or proceeding.

The time period for reply, if any, is set in the attached communication.

Notice of the Office communication was sent electronically on above-indicated "Notification Date" to the following e-mail address(es):

docketing-patent@blacklaw.com
blgdocketing@blacklaw.com

UNITED STATES PATENT AND TRADEMARK OFFICE

Commissioner for Patents
United States Patent and Trademark Office
P.O. Box 1450
Alexandria, VA 22313-1450
www.uspto.gov

MAILED

OCT 06 2011

DIRECTOR OFFICE
TECHNOLOGY CENTER 2400

LOWE GRAHAM JONES, PLLC
701 FIFTH AVENUE
SUITE 4800
SEATTLE, WA 98104

In re Application of LATEGAN, CHRISTOPHER F.
Appl. No.: 12914834
Filed: 10/28/2010
Atty Docket No.: ADBL-1-2402
For: SESSION POOLING FOR LEGACY APPLICATION TASKS

DECISION ON PETITION UNDER 37 C.F.R. §1.84(a)(2) TO ACCEPT COLOR DRAWINGS

This is a decision on the petition under 37 C.F.R. § 1.84(a)(2), filed January 10, 2011, requesting acceptance of color drawings.

The petition requests that the color drawings, be accepted in lieu of black and white drawings.

A grantable petition under 37 C.F.R. § 1.84(a)(2) must be accompanied by: (i) a fee set forth under 37 C.F.R. §1.17(i); (ii) 3 (three) sets of the color drawings in question, unless the color drawings are submitted via EFS-Web (see 74 FR 55200, 10/27/09); and (iii) the specification must contain, or be amended to contain, the following language as the first paragraph in that portion of the specification relating to the brief description of the drawings: "the file of this patent contains at least one drawing executed in color. Copies of this patent with color drawing(s) will be provided by the Patent and Trademark Office upon request and payment of the necessary fee."

The petition is GRANTED as it meets the requirements above-mentioned.

Any inquiry concerning this decision should be directed to the undersigned at (571)272-3902 or Christopher Grant whose telephone number is (571) 272-7294.

/Beatriz Prieto/

Beatriz Prieto, Quality Assurance Specialist
Technology Center 2400

UNITED STATES PATENT AND TRADEMARK OFFICE

UNITED STATES DEPARTMENT OF COMMERCE
United States Patent and Trademark Office
Address: COMMISSIONER FOR PATENTS
P.O. Box 1450
Alexandria, Virginia 22313-1450
www.uspto.gov

APPLICATION NO.	FILING DATE	FIRST NAMED INVENTOR	ATTORNEY DOCKET NO.	CONFIRMATION NO.
12/914,837	10/28/2010	Christopher F. Lategan	ADBL-1-2403	6556

25315 7590 03/11/2011
BLACK LOWE & GRAHAM, PLLC
701 FIFTH AVENUE
SUITE 4800
SEATTLE, WA 98104

EXAMINER

ART UNIT	PAPER NUMBER
2172	

NOTIFICATION DATE	DELIVERY MODE
03/11/2011	ELECTRONIC

Please find below and/or attached an Office communication concerning this application or proceeding.

The time period for reply, if any, is set in the attached communication.

Notice of the Office communication was sent electronically on above-indicated "Notification Date" to the following e-mail address(es):

docketing-patent@blacklaw.com
blgdocketing@blacklaw.com

UNITED STATES PATENT AND TRADEMARK OFFICE

Commissioner for Patents
United States Patent and Trademark Office
P.O. Box 1450
Alexandria, VA 22313-1450
www.uspto.gov

BLACK LOWE & GRAHAM, PLLC
701 FIFTH AVENUE
SUITE 4800
SEATTLE WA 98104

In re Application of:
LATEGAN, Christopher
Application No. 12/914,837
Filed: October 28, 2010
For: **MODERNIZATION OF LEGACY APPLICATIONS USING DYNAMIC ICONS**

DECISION ON PETITION UNDER 37 C.F.R. § 1.84(a)(2) TO ACCEPT COLOR DRAWINGS

This is a decision on the petition under 37 C.F.R. § 1.84(a)(2), filed on January 10, 2011, requesting acceptance of color drawings.

The petition requests that the color drawings of Figures 1A-5 and 18A-18D be accepted in lieu of black and white drawings.

A grantable petition under 37 C.F.R. § 1.84(a)(2) must be accompanied by a fee set forth under 37 C.F.R. § 1.17(h), 3 (three) sets of the color drawings in question, and the specification must contain, or be amended to contain, the following language as the first paragraph in that portion of the specification relating to the brief description of the drawings:

"The patent or application file contains at least one drawing executed in color. Copies of this patent or patent application publication with color drawings will be provided by the U.S. Patent and Trademark Office upon request and payment of the necessary fee."

The petition was filed with the required fee and was filed with one (1) set of color drawings (Figures 1A-5 and 18A-18D) via EFS-Web, which is acceptable. Paragraph [0007] of the specification contains the required notification described above.

Accordingly, the petition is **GRANTED**.

Any inquiry regarding this decision should be directed to Eddie C. Lee at (571) 272-1732.

/Eddie C. Lee/

Eddie C. Lee
Quality Assurance Specialist, TC 2100

UNITED STATES PATENT AND TRADEMARK OFFICE

Commissioner for Patents
United States Patent and Trademark Office
P.O. Box 1450
Alexandria, VA 22313-1450
www.uspto.gov

RICHARD ARON OSMAN
3525 DEL MAR HEIGHTS RD. #915
SAN DIEGO CA 92130

MAILED
JUN 23 2011
OFFICE OF PETITIONS

In re Application of	:	
Haizhou Sun et al	:	DECISION REFUSING STATUS
Application No. 12/914,840	:	UNDER 37 CFR 1.47(a)
Filed: October 28, 2010	:	
Attorney Docket No. J15-1US	:	

This is in response to the petition under 37 CFR 1.47(a), filed March 12, 2011.

The petition is dismissed.

Rule 47 applicant is given TWO MONTHS from the mailing date of this decision to reply, correcting the below-noted deficiencies. Any reply should be entitled "Request for Reconsideration of Petition Under 37 CFR 1.47(a)," and should only address the deficiencies noted below, except that the reply may include an oath or declaration executed by the non-signing inventor. **FAILURE TO RESPOND WILL RESULT IN ABANDONMENT OF THE APPLICATION.** Any extensions of time will be governed by 37 CFR 1.136(a).

A grantable petition under 37 CFR 1.47(a) requires: (1) proof that the non-signing inventor cannot be reached or refuses to sign the oath or declaration after having been presented with the application papers (specification, claims and drawings); (2) an acceptable oath or declaration in compliance with 35 U.S.C. §§ 115 and 116; (3) the petition fee; and (4) a statement of the last known address of the non-signing inventor. Applicant lacks item(s) (1) set forth above.

As to item (1), the applicable statute (35 U.S.C.§ 116) requires that a "diligent effort" have been expended in attempting to find or reach the non-signing inventor. *See* MPEP 409.03(a). The showing currently fails to demonstrate, with a documented showing, that a diligent effort was made to find or locate non-signing inventor Gunnar James Hanson, such that the declaration can be accepted under 37 CFR 1.47(a). Where inability to find or locate a named inventor(s) is alleged, a statement of facts should be submitted that fully describes the exact facts which are relied on to establish that a *diligent effort* was made to locate the inventor.

Petitioner has not demonstrated that all efforts were expended in trying to locate non-signing inventor Gunnar James Hanson. In this regard, petitioner should, at the very least, conduct a search of the regional or national registry(s). The results of such search should be made in any future petition for reconsideration. *See* MPEP 409.03(d). Additionally, petitioner should state whether he has access to inventor Hanson's personnel records and, if so, what does inspection of the records reveal as to a current address, forwarding address, or an address of the nearest living relative? What does inspection of the phone directories for those address locations reveal? Further, the petition fails to indicate that correspondence was ever mailed unsuccessfully to the inventor's last known address. Therefore, at the very least, petitioner should mail correspondence to the inventor's last known address, return receipt and/or forwarding address requested. If a forwarding address is provided, petitioner should then mail a complete copy of the application papers (specification, claims, drawings, oath, etc.) to Mr. Hanson's address, return receipt requested, along with a cover letter of instructions which includes a deadline or a statement that no response will constitute a refusal. This sort of ultimatum lends support to a finding of refusal by conduct. If the papers are returned and all other attempts to locate or reach the inventor, e.g., through personnel records, co-workers, E-mail, the Internet or the telephone, etc., continue to fail, then applicant will have established that the inventor cannot be reached after diligent effort or has refused to join in the application. **The statements of facts must be signed, where at all possible, by a person having firsthand knowledge of the facts recited therein and should be accompanied by documentary evidence in support of the statement of facts.** It is important that the forthcoming communication contain statements of fact as opposed to conclusions.

Where there is an express or oral refusal, that fact, along with the time and place of the refusal, must be stated in an affidavit or declaration by the party to whom the refusal was made. Where there is a written refusal, a copy of the document(s) evidencing that refusal must be made part of the affidavit or declaration.

When it is concluded by the rule 47 applicant that an omitted inventor's conduct constitutes a refusal, all facts upon which that conclusion is based should be stated in an affidavit or declaration. If there is documentary evidence to support facts alleged in the affidavit or declaration, such evidence must be submitted.

Whenever an omitted inventor gives a reason for refusing to sign the application oath or declaration, that reason should be stated in the affidavit or declaration.

Further correspondence with respect to this matter should be delivered through one of the following mediums:

By mail:	Mail Stop PETITIONS Commissioner for Patents Post Office Box 1450 Alexandria, VA 22313-1450
By hand:	Customer Service Window Mail Stop Petitions Randolph Building 401 Dulany Street Alexandria, VA 22314
By fax:	(571) 273-8300 ATTN: Office of Petitions
By internet:	EFS-Web www.uspto.gov/ebc/efs_help.html (for help using EFS-Web call the Patent Electronic Business Center at (866) 217-9197)

Any questions concerning this matter may be directed to the undersigned at (571) 272-3208.

/KOC/
Karen Creasy
Petitions Examiner
Office of Petitions

UNITED STATES PATENT AND TRADEMARK OFFICE

Commissioner for Patents
United States Patent and Trademark Office
P.O. Box 1450
Alexandria, VA 22313-1450
www.uspto.gov

RICHARD ARON OSMAN
3525 DEL MAR HEIGHTS RD. #915
SAN DIEGO CA 92130

MAILED
JUL 27 2011
OFFICE OF PETITIONS

In re Application of	:	
Haizhou Sun et al	:	DECISION NOTING JOINDER OF
Application No. 12/914,840	:	INVENTOR AND PETITION
Filed: October 28, 2010	:	UNDER 37 CFR 1.47(a)
Attorney Docket No. J15-1US	:	

Papers filed on July 14, 2011, in response to a "Decision Refusing Status Under 37 CFR 1.47(a)," mailed June 23, 2011, included a Declaration signed by a previously non-signing inventor, Gunnar James Hanson, in compliance with 37 CFR 1.63.

The petition is **DISMISSED AS MOOT**.

In view of the joinder of the inventor, further consideration under § 1.47(a) is not necessary. This application does not have any Rule 1.47 status and no such status should appear on the record for this file. This application need not be returned to this Office for any further consideration under 37 CFR 1.47(a).

This application is being referred to Technology Center AU 1646 for examination in due course.

Telephone inquiries should be directed to the undersigned at (571) 272-3208.

/KOC/
Karen Creasy
Petitions Examiner
Office of Petitions

UNITED STATES PATENT AND TRADEMARK OFFICE

UNITED STATES DEPARTMENT OF COMMERCE
United States Patent and Trademark Office
Address: COMMISSIONER FOR PATENTS
P.O. Box 1450
Alexandria, Virginia 22313-1450
www.uspto.gov

APPLICATION NO.	FILING DATE	FIRST NAMED INVENTOR	ATTORNEY DOCKET NO.	CONFIRMATION NO.
12/914,843	10/28/2010	Christopher F. Lategan	ADBL-1-2404	6568

25315 7590 10/07/2011
LOWE GRAHAM JONES, PLLC
701 FIFTH AVENUE
SUITE 4800
SEATTLE, WA 98104

EXAMINER
VU, KIEU D

ART UNIT	PAPER NUMBER
2173	

NOTIFICATION DATE	DELIVERY MODE
10/07/2011	ELECTRONIC

Please find below and/or attached an Office communication concerning this application or proceeding.

The time period for reply, if any, is set in the attached communication.

Notice of the Office communication was sent electronically on above-indicated "Notification Date" to the following e-mail address(es):

docketing-patent@blacklaw.com
blgdocketing@blacklaw.com

UNITED STATES PATENT AND TRADEMARK OFFICE

Commissioner for Patents
United States Patent and Trademark Office
P.O. Box 1450
Alexandria, VA 22313-1450
www.uspto.gov

LOWE GRAHAM JONES, PLLC
701 FIFTH AVENUE
SUITE 4800
SEATTLE WA 98104

In re Application of:
LATEGAN, Christopher
Application No. 12/914,843
Filed: October 28, 2010
For: **DYNAMIC EXTENSIONS TO LEGACY APPLICATION TASKS**

DECISION ON PETITION UNDER 37 C.F.R. § 1.84(a)(2) TO ACCEPT COLOR DRAWINGS

This is a decision on the petition under 37 C.F.R. § 1.84(a)(2), filed on January 10, 2011, requesting acceptance of color drawings.

The petition requests that the color drawings of Figures 1A-5 and 18A-21E be accepted in lieu of black and white drawings.

A grantable petition under 37 C.F.R. § 1.84(a)(2) must be accompanied by a fee set forth under 37 C.F.R. § 1.17(h), 3 (three) sets of the color drawings in question, and the specification must contain, or be amended to contain, the following language as the first paragraph in that portion of the specification relating to the brief description of the drawings:

"The patent or application file contains at least one drawing executed in color. Copies of this patent or patent application publication with color drawings will be provided by the U.S. Patent and Trademark Office upon request and payment of the necessary fee."

The petition was filed with the required fee and was filed with one (1) set of color drawings (Figures 1A-5 and 18A-21E) via EFS-Web, which is acceptable. Paragraph [0007] of the specification contains the required notification described above.

Accordingly, the petition is **GRANTED**.

Any inquiry regarding this decision should be directed to Eddie C. Lee at (571) 272-1732.

/Eddie C. Lee/

Eddie C. Lee
Quality Assurance Specialist, TC 2100

UNITED STATES PATENT AND TRADEMARK OFFICE

UNITED STATES DEPARTMENT OF COMMERCE
United States Patent and Trademark Office
Address: COMMISSIONER FOR PATENTS
P.O. Box 1450
Alexandria, Virginia 22313-1450
www.uspto.gov

APPLICATION NO.	FILING DATE	FIRST NAMED INVENTOR	ATTORNEY DOCKET NO.	CONFIRMATION NO.
12/914,850	10/28/2010	Christopher F. Lategan	ADBL-1-2405	6577

25315 7590 10/07/2011
LOWE GRAHAM JONES, PLLC
701 FIFTH AVENUE
SUITE 4800
SEATTLE, WA 98104

EXAMINER
VU, KIEU D

ART UNIT	PAPER NUMBER
2173	

NOTIFICATION DATE	DELIVERY MODE
10/07/2011	ELECTRONIC

Please find below and/or attached an Office communication concerning this application or proceeding.

The time period for reply, if any, is set in the attached communication.

Notice of the Office communication was sent electronically on above-indicated "Notification Date" to the following e-mail address(es):

docketing-patent@blacklaw.com
blgdocketing@blacklaw.com

UNITED STATES PATENT AND TRADEMARK OFFICE

Commissioner for Patents
United States Patent and Trademark Office
P.O. Box 1450
Alexandria, VA 22313-1450
www.uspto.gov

LOWE GRAHAM JONES, PLLC
701 FIFTH AVENUE
SUITE 4800
SEATTLE WA 98104

In re Application of:
LATEGAN, Christopher
Application No. 12/914,850
Filed: October 28, 2010
For: **HOTKEY ACCESS TO LEGACY APPLICATION TASKS**

DECISION ON PETITION UNDER 37 C.F.R. § 1.84(a)(2) TO ACCEPT COLOR DRAWINGS

This is a decision on the petition under 37 C.F.R. § 1.84(a)(2), filed on January 10, 2011, requesting acceptance of color drawings.

The petition requests that the color drawings of Figures 1A-5 and 18-19G be accepted in lieu of black and white drawings.

A grantable petition under 37 C.F.R. § 1.84(a)(2) must be accompanied by a fee set forth under 37 C.F.R. § 1.17(h), 3 (three) sets of the color drawings in question, and the specification must contain, or be amended to contain, the following language as the first paragraph in that portion of the specification relating to the brief description of the drawings:

"The patent or application file contains at least one drawing executed in color. Copies of this patent or patent application publication with color drawings will be provided by the U.S. Patent and Trademark Office upon request and payment of the necessary fee."

The petition was filed with the required fee and was filed with one (1) set of color drawings (Figures 1A-5 and 18-19G) via EFS-Web, which is acceptable. Paragraph [0007] of the specification contains the required notification described above.

Accordingly, the petition is **GRANTED**.

Any inquiry regarding this decision should be directed to Eddie C. Lee at (571) 272-1732.

/Eddie C. Lee/

Eddie C. Lee
Quality Assurance Specialist, TC 2100

UNITED STATES PATENT AND TRADEMARK OFFICE

UNITED STATES DEPARTMENT OF COMMERCE
United States Patent and Trademark Office
Address: COMMISSIONER FOR PATENTS
P.O. Box 1450
Alexandria, Virginia 22313-1450
www.uspto.gov

APPLICATION NO.	FILING DATE	FIRST NAMED INVENTOR	ATTORNEY DOCKET NO.	CONFIRMATION NO.
12/914,871	10/28/2010	Kamyar Moinzadeh	44375-2163	6629

73552 7590 01/11/2011
Stolowitz Ford Cowger LLP
621 SW Morrison St
Suite 600
Portland, OR 97205

EXAMINER
MAWARI, REDHWAN K

ART UNIT	PAPER NUMBER
3663	

MAIL DATE	DELIVERY MODE
01/11/2011	PAPER

Please find below and/or attached an Office communication concerning this application or proceeding.

The time period for reply, if any, is set in the attached communication.

UNITED STATES PATENT AND TRADEMARK OFFICE

Commissioner for Patents
United States Patent and Trademark Office
P.O. Box 1450
Alexandria, VA 22313-1450
www.uspto.gov

JAN 1 1 2011

Stolowitz, Ford, Cowger LLP
621 SW Morrison St
Suite 600
Portland, OR 97205

In re application of Kamyar Moinzadeh et al. Application No. 12/914,871 Filed: October 28, 2010 For: CENTRALIZED MANAGEMENT OF MOTOR VEHICLE SOFTWARE APPLICATIONS AND SERVICES	: : : :	**DECISION ON PETITION TO MAKE SPECIAL FOR NEW APPLICATION UNDER 37 CFR 1.102**

This is a decision on the petition filed on October 28, 2010 to make the above-identified application special for accelerated examination procedure under 37 C.F.R. § 1.102(d).

The petition to make the application special is **DISMISSED**.

REGULATION AND PRACTICE

A grantable petition to make special under 37 C.F.R. § 1.102(d) and pursuant to the "Change to Practice for Petitions in Patent Applications to Make Special and for Accelerated Examination" published in the Federal Register on June 26, 2006 (71 Fed. Reg. 36323), must satisfy the following conditions:

I. Conditions Regarding the Application:

1. the application must be a non-reissue utility or design application filed under 37 CFR 1.111(a);
2. the application, the petition and the required fees must be filed electronically using the USPTO's electronic filing system (EFS), or EFS-web; if not filed electronically, a statement asserting that EFS and EFS-web were not available during the normal business hours.
3. at the time of filing, the application must be complete under 37 CFR 1.51 and in condition for examination;
4. the application must contain three or fewer independent claims and twenty or fewer total claims and the claims must be directed to a single invention.

II. Conditions Regarding the Petition:

The petition must:

1. be filed with the application;

2. include a statement that applicant agrees not to separately argue the patentability of any independent claim during any appeal in the application;

3. include a statement that applicant agrees to make an election without traverse in a telephone interview.

4. include a statement that applicant agrees to conduct such an interview when requested by the examiner.

5. include a statement, made based on a good faith belief, that a preexamination search in compliance with the following requirements, was conducted, including an identification of the field of search by United States class and subclass, where applicable, and for database searches, the search logic or chemical structure or sequence used as a query, the name of the file(s) searched and the database service, and the date of the search. The preexamination search must:

5.1 involve U.S. patents and patent application publications, foreign patent documents, and non-patent literature, unless the applicant can justify with reasonable certainty that no references more pertinent than those already identified are likely to be found in the eliminated sources and includes such a justification with this statement;

5.2. be directed to the claimed invention and encompass all of the features of the claims, giving the claims the broadest reasonable expectation;

5.3. encompass the disclosed features that may be claimed.

6. must provide in support of the petition an accelerated examination support document.

An accelerated examination support document must include:

6.1. an information disclosure statement (IDS) in compliance with 37 CFR 1.98 citing each reference deemed most closely related to the subject matter of each of the claims;

6.2. an identification of all the limitations in the claims that are disclosed by the reference specifying where the limitation is disclosed in the cited reference;

6.3. a detailed explanation of how each of the claims are patentable over the references cited with particularity required by 37 CFR 1.111(b) and (c);

6.4. a concise statement of the utility of the invention as defined in each of the independent claims (unless the application is a design application);

6.5. a showing of where each limitation of the claims finds support under 35 USC 112, first paragraph, in the written description of the specification. If applicable, the showing must also identify: (1) each means- (or step) plus-function claim element that invokes consideration under 35 UDC 112, sixth paragraph; and (2) the

structure, material, or acts in the specification that corresponds to each means- (or step) plus-function claim element that invokes consideration under 35 UDC 112, sixth paragraph; if the application claims the benefit of one or more applications under title 35, United States Code, the showing must also include where each limitation of the claims finds support under 35 USC 112, first paragraph, in each such application in which such supports exists;
6.6. an identification of any cited references that may be disqualified under 35 USC 103(c).

REVIEW OF FACTS

The petition in this case fails to comply with conditions II.5.2, II.6.2, and II.6.3.

As to condition II.5.2, the petition lacks an indication of a preexamination search that encompasses all of the features of the claims. With respect to the classification search, a proper classification search requires the entire subclass (without limiting factors) be searched for those requiring a search. In addition to the single subclass listed, the classification search needs to include at least an entire search of: 340/5.1, 5.8, 5.81, 905, 936, 995.1, 995.11, 995.12, 995.13, 995.27, 438, 439, 441, 466, 576; 455/456.1, 456.2, 456.3, 457, 569.1, 569.2, 575.9; 701/1, 2, 23, 24, 25, 26, 29, 30, 32, 33, 35, 36, 48, 49, 200, 208, 209, 210, 211, 212, 213, 300; and 709/203, 208, 209, 211, 217, 218, 219, 220, 229. Also, because it is necessary to look for every limitation claimed, the indication in the Support Document that limitations such as the limitations of claims 2, 10-11, 13-16 and 18-20, for example, are not found in any of the cited references exposes evidence of the search not encompassing the claimed invention. At least the above noted claim limitations seem to contain elements that the examiner assigned this case believes are quite common and it strains credulity to assert that nowhere in the prior art are located these additional claimed limitations. While a reference containing a specific limitation of any one claim may not result in a rejection of the claim, not finding the structure at all calls into question the sufficiency of the search. It appears that the search may have been completed on the concept of the disclosed invention rather than the "claimed invention" as is required.

As background to condition II.6.2; an AESD that contains a list of references in the information disclosure statement (IDS) of the AESD, but does not include any identification and explanation for those references that are not required to be submitted in the IDS of the AESD (*i.e.*, references that are not most closely related to the subject matter of each of the claims), will be deemed insufficient for lack of identification and explanation. If applicant wishes to cite references that are not required in an AESD for the examiner to consider, applicant may submit such references in a separate IDS in compliance with 37 CFR 1.97 and 1.98. Applicant should clearly identify the IDS of the AESD that is in support of the petition to make special and, similarly, applicant should clearly identify the separate IDS that is not in support of the petition. Consistent with 37 CFR 10.18, any reference submitted

in a separate IDS that is not part of an AESD will be treated as a representation by applicant to the USPTO that no reference submitted in the separate IDS is deemed closer to the subject matter of at least one claim than the references provided in the AESD.

Furthermore, a supplemental AESD is required if a reference being submitted in an IDS is deemed more closely related to the subject matter of at least one claim than the references provided in the previously-filed AESD. Consistent with 37 CFR 10.18, any reference submitted in a separate IDS that is not part of an AESD is a representation by applicant to the USPTO that no reference submitted in the separate IDS is deemed closer to the subject matter of at least one claim than the references provided in the AESD. If applicant deems references found after the initial filing to be closer to the subject matter of at least one claim than the references provided in the AESD, then applicant needs to supplement the AESD to account for these references.

Finally, the general requirement is that applicant is required to submit an accelerated examination support document (AESD) that includes an IDS in compliance with 37 CFR 1.98 citing each reference deemed most closely related to the subject matter of each of the claims (whether in independent or dependent form). Specifically:

> **(1)** Applicant **is not** required to cite the references that are only relevant to the general subject matter of the claims because there are references that are more closely related to the subject matter of the claims. Applicant is also not required to cite a reference that is cumulative to any other reference cited in the IDS.
> **(2)** Applicant **is** required to cite any reference that establishes, by itself or in combination with other information, a prima facie case of unpatentability of a claim (see 37 CFR 1.56(b)) in the IDS of the AESD.
> **(3)** Applicant **is** required to cite the reference that discloses the most limitations in the independent claim.
> **(4)** Applicant **is** required to cite any reference that discloses a limitation of an independent claim that is not shown in the other references.
> **(5)** Applicant **is** required to cite any reference that discloses a limitation of a dependent claim that is not shown in the other references.

As to condition II.6.2 specifically for this case, since it is required that the most closely related references are to be submitted with the petition, all of the references submitted are considered to be "most closely related" and need to be completely addressed in the Support Document. Currently applicant's AESD references "An IDS citing the 3 references most closely related to the subject matter of the claims". However there is no IDS with 3 references. The IDS with the 3 references analyzed in the AESD also contains a 4th reference. However, this 4th reference appears to be the Search Report, and it's unclear why it's there, as it would not appear to be a publication? Furthermore,

numerous additional IDSs have been submitted and it is not clear whether they are in support of the petition or not. Without a clear indication, they are assumed to be. Any reference deemed not to be in support of the petition must follow the guidelines for submission in the petition explained above.

There currently is not an adequate listing of all the limitations (or portions thereof) in each of the claims (not just the independent claims) that are disclosed in each of the 3 cited references, specifying where each of the limitations (or portions thereof) are disclosed in each of the references. Also, it has not been made completely clear which of the limitations are taught by any of the references. For example, for the final limitation of claim 1, the applicant has indicated that the Zhang reference does not *explicitly* recite the limitation, however, it is not known what this means. Does this mean that the reference *implicitly* teaches the limitation, or that it clearly does not teach it? It must be made clear if a limitation is taught or is not taught by the prior art.

As to condition II.6.3, the indication of which claims are deemed to be patentable and why does not seem to coincide with what is being disclosed as taught by the art of record. For example, applicant indicates that claim 1 is allowable over the prior art due to a number of limitations not taught by the prior art. However, all of the limitations of the claim appear to be taught by either Zhang or Cragun. How is it that a particular limitation is a patentable distinction if it is indicated as being taught by a reference? Since it is also necessary for applicant to consider patentability under obviousness, this apparent inconsistency needs to be resolved. Likewise, some of the dependent claims appear to be indicating that they are taught by the prior art, yet are also indicated as not being disclosed by the prior art references. A clear indication of what limitations are taught, and where they can be found in the references, or an indication of how these limitations are patentably distinct over the prior art is required. Applicant's admission on the record that claims 4-5 and 7-9 are not deemed as being separately patentable from the claims upon which they depend, is noted.

The petition fails to meet the required conditions to be accorded special status under the accelerated examination procedure.

DECISION

For the above stated reasons, the petition is **DISMISSED**. The application will therefore be taken up by the examiner for action in its regular turn.

Petitioner is given a single opportunity to perfect the petition. Any request for reconsideration of this decision must be submitted within one (1) month or thirty (30) days, whichever is longer, from the date of this decision. No extensions of time will be granted under 37 CFR 1.136(a) if the request is to be considered timely. Any request for reconsideration must address the deficiencies indicated above.

Petitioner is reminded that, upon granting of the special status of the application on request for reconsideration, the application will be processed expeditiously. However, due to the dismissal of the instant petition, examination may not be completed within twelve months of the filing date of the application.

Any inquiry regarding this decision should be directed to Steven N. Meyers at (571) 272-6611.

Steven N. Meyers
Quality Assurance Specialist
Technology Center 3600

Snm:1/10/11

UNITED STATES PATENT AND TRADEMARK OFFICE

UNITED STATES DEPARTMENT OF COMMERCE
United States Patent and Trademark Office
Address: COMMISSIONER FOR PATENTS
P.O. Box 1450
Alexandria, Virginia 22313-1450
www.uspto.gov

APPLICATION NO.	FILING DATE	FIRST NAMED INVENTOR	ATTORNEY DOCKET NO.	CONFIRMATION NO.
12/914,871	10/28/2010	Kamyar Moinzadeh	44375-2163	6629

73552 7590 02/15/2011
Stolowitz Ford Cowger LLP
621 SW Morrison St
Suite 600
Portland, OR 97205

EXAMINER
NGUYEN, CHUONG P

ART UNIT	PAPER NUMBER
3663	

MAIL DATE	DELIVERY MODE
02/15/2011	PAPER

Please find below and/or attached an Office communication concerning this application or proceeding.

The time period for reply, if any, is set in the attached communication.

UNITED STATES PATENT AND TRADEMARK OFFICE

Commissioner for Patents
United States Patent and Trademark Office
P.O. Box 1450
Alexandria, VA 22313-1450
www.uspto.gov

FEB 15 2011

Stolowitz, Ford, Cowger LLP
621 SW Morrison St
Suite 600
Portland, OR 97205

In re application of Kamyar Moinzadeh et al. Application No. 12/914,871 Filed: October 28, 2010 For: CENTRALIZED MANAGEMENT OF MOTOR VEHICLE SOFTWARE APPLICATIONS AND SERVICES	: : : :	**DECISION ON PETITION TO MAKE SPECIAL FOR NEW APPLICATION UNDER 37 CFR 1.102**

This is a decision on the renewed petition filed on February 11, 2011, to make the above-identified application special for accelerated examination procedure under 37 C.F.R. § 1.102(d).

The renewed petition to make the application special is **GRANTED**.

The application is eligible for accelerated examination and the petition complies with the conditions for granting the application special status pursuant to the "Change to Practice for Petitions in Patent Applications to Make Special and for Accelerated Examination" published June 26, 2006, in the Federal Register. (71 Fed. Reg. 36323).

The prosecution of the instant application will be conducted expeditiously according to the following guidelines.

1. The application will be docketed to an examiner and taken up for action within two weeks of the date of this decision.

2. Restriction Practice:
If the examiner determines that the claims are not directed to a single invention, a telephone request to elect one single invention will be made pursuant to MPEP 812.01. As a prerequisite to the grant of this petition, the applicant has agreed to make an oral election, by telephone, without traverse. If the applicant refuses to make an election without traverse, or the examiner cannot reach the applicant after a reasonable effort, the examiner will treat the first claimed invention

(invention defined by claim 1) as having being constructively elected without traverse for examination.

3. Office action:
If it is determined that, after appropriate consultation, there is a potential rejection or any other issue to be addressed, the examiner will telephone the applicant and arrange an interview to discuss and resolve the issue. An Office action, other than a Notice of Allowance and Fee(s) Due (Notice of Allowance), will not be issued unless either: 1) an interview was conducted but did not result in agreed to action that places the application in condition for allowance, or, 2) a determination is made that an interview would be unlikely to result in the application being placed in condition for allowance, and 3) an internal conference has been held to review any rejection of any claim.

4. Time for Reply:
An Office action other than a Notice of Allowance or a final Office action will set a shortened statutory period of one month or thirty days, whichever is longer, for reply with no extension of time available under 37 CFR 1.136(a). Failure to timely file a reply within this non-extendible period for reply will result in the abandonment of the application.

5. Reply by Applicant:
A timely reply to an Office action other than the Notice of Allowance must be submitted electronically via EFS or EFS-web and limited to addressing the rejections, objections and requirement made. Any amendment that attempts to: 1) add claims which would result in more than three pending independent claims or more than twenty pending total claims; 2) present claims not encompassed by the pre-examination search or an updated accelerated examination support document; or 3) present claims that are directed to a non-elected invention or an invention other than that previously claimed and examined in the application, will be treated as not fully responsive and will not be entered.

For any amendment to the claims (including any new claim) that is not encompassed by the accelerated examination support document, applicant must provide an updated accelerated examination support document that encompasses the amended or new claims at the time of filing of the amendment.

To proceed expeditiously with the examination, it is recommended that a reply with amendments made to any claim or with any new claim being added be accompanied by an updated accelerated examination support document or a statement explaining how the amended or new claim is supported by the original accelerated examination support document.

6. Information Disclosure Statement (IDS):
Any IDS filed during prosecution must be submitted electronically via EFS or EFS-web, accompanied by an updated accelerated examination support document, and be in compliance with 37 CFR 1.97 and 1.98.

7. Post-Allowance Processing:

To expedite processing of the allowed application into a patent, the applicant must: 1) pay the required fees within one month of the date of the Notice of Allowance, and 2) not file any post allowance papers not required by the Office. In no event may the issue fee be paid and accepted later than three months from the date of the Notice of Allowance.

8. After-Final and Appeal Procedures:
To expedite prosecution, after receiving the final Office action, applicant must: 1) promptly file a notice of appeal, an appeal brief and appeal fees; and 2) not request a pre-appeal brief conference.

Any amendment, affidavit or other evidence filed after final Office action must comply with applicable rules and the requirements outlined in numbered paragraphs 5 and 6 above.

On appeal, the application will proceed according to normal appeal procedures. After appeal, the application will again be treated special.

9. Proceedings Outside the Normal Examination Process:
If the application becomes involved in a proceeding that is outside the normal examination process (e.g., a secrecy order, national security review, interference proceeding, petitions under 37 CFR 1.181, 182 or 183), the application will be treated special before and after such proceeding.

10. Final Disposition:
The twelve month goal of this accelerated examination procedure ends with a final disposition. The mailing of a final Office action, a Notice of Allowance, the filing of a Notice of Appeal, or the filing of a Request for Continued Examination (RCE) is the final disposition.

If, during prosecution, a paper is not filed electronically using EFS-web, a reply is filed but is not fully responsive, the application is involved in an appeal, or a proceeding outside normal examination process, the application will still be examined expeditiously, however, the final disposition may occur more than twelve months from the filing of the application.

Any inquiry regarding this decision should be directed to Quality Assurance Specialist Steven N. Meyers, at (571) 272-6611.

Steven N. Meyers,
Quality Assurance Specialist
Technology Center 3600

Sm/sm: 2/14/11

UNITED STATES PATENT AND TRADEMARK OFFICE

Commissioner for Patents
United States Patent and Trademark Office
P.O. Box 1450
Alexandria, VA 22313-1450
www.uspto.gov

MAILED

APR 10 2012

OFFICE OF PETITIONS

STETINA BRUNDA GARRED & BRUCKER
75 ENTERPRISE, SUITE 250
ALISO VIEJO CA 92656

In re Application of	:	
Ziming He et al.	:	
Application No. 12/914,922	:	DECISION ON PETITION
Filed: October 28, 2010	:	TO WITHDRAW
Attorney Docket No. RFTEL – 002A	:	FROM RECORD
	:	

This is a decision on the Request to Withdraw as attorney or agent of record under 37 C.F.R. § 1.36(b), filed March 16, 2012.

The request is **not approved.**

The Office will no longer approve requests from practitioners to withdraw from applications where the requesting practitioner is acting, or has acted, in a representative capacity pursuant to 37 CFR 1.34. In these situations, the practitioner is responsible for the correspondence the practitioner files in the application while acting in a representative capacity. As such, there is no need for the practitioner to obtain the Office's permission to withdraw from representation. However, practitioners acting in a representative capacity, like practitioners who have a power of attorney in the application, remain responsible for noncompliance with 37 CFR 1.56, as well as 37 CFR 10.18, with respect to documents they file.

A review of the file record indicates that Benjamin N. Diederich, and attorneys/agents associated with customer number 07663, do not have power of attorney, but has acted in a representative capacity in this patent application. See 37 C.F.R. § 10.40.

The request to change the correspondence address should be that of the: (1) the first named signing inventor; or (2) an assignee of the entire interest under 37 C.F.R 3.71. If an assignee has intervened in this application then a Statement under 37 CFR 3.73(b), or a copy of the actual assignment must be submitted along with a change of correspondence address if desired, using Form No. PTO/SB/122.

Telephone inquiries concerning this decision should be directed to the undersigned at 571-272-4618

/Kimberly Inabinet/

Kimberly Inabinet
Petitions Examiner
Office of Petitions

PTO/SB/20PCT-JP (05-10)
Approved for use through 01/31/2012. OMB 0651-0058
U.S. Patent and Trademark Office; U. S. DEPARTMENT OF COMMERCE
Under the Paperwork Reduction Act of 1995, no persons are required to respond to a collection of information unless it displays a valid OMB control number.

REQUEST FOR PARTICIPATION IN THE PATENT COOPERATION TREATY - PATENT PROSECUTION HIGHWAY (PCT-PPH) PILOT PROGRAM BETWEEN THE JAPAN PATENT OFFICE (JPO) AND THE USPTO

Application No:	12/914,939	Filing date:	2010/10/28
First Named Inventor:	TAKESHI KAWASHIMA		
Title of the Invention:	MANUFACTURING METHOD OF MICROSTRUCTURE		

THIS REQUEST FOR PARTICIPATION IN THE PCT-PPH PILOT PROGRAM ALONG WITH THE REQUIRED DOCUMENTS MUST BE SUBMITTED VIA EFS-WEB. INFORMATION REGARDING EFS-WEB IS AVAILABLE AT HTTP://WWW.USPTO.GOV/EBC/EFS_HELP.HTML

APPLICANT HEREBY REQUESTS PARTICIPATION IN THE PCT-PPH PROGRAM AND PETITIONS TO MAKE THE ABOVE-IDENTIFIED APPLICATION SPECIAL UNDER THE PCT-PPH PROGRAM.

The above-identified application is (1) a national stage entry of the corresponding PCT application, or (2) a national stage entry of another PCT application which claims priority to the corresponding PCT application, or (3) a national application that claims domestic/ foreign priority to the corresponding PCT application, or (4) a national application which forms the basis for the priority claim in the corresponding PCT application, or (5) a continuing application of a U.S. application that satisfies one of (1) to (4) above, or (6) a U.S. application that claims domestic benefit to a U.S. provisional application which forms the basis for the priority claim in the corresponding PCT application.

The corresponding PCT application number(s) is/are: PCT/JP2010/004783

The international date of the corresponding PCT application(s) is/are: 2010/07/28

I. List of Required Documents:

a. **A copy of the latest international work product (WO/ISA, WO/IPEA, or IPER) in the above–identified corresponding PCT application(s)**

- [x] Is attached.
- [ ] Is not attached because the document is already in the U.S. application.

b. **A copy of all claims which were indicated as having novelty, inventive step and industrial applicability in the above-identified corresponding PCT application(s).**

- [x] Is attached.
- [ ] Is not attached because the document is already in the U.S. application.

c. **English translations of the documents in a. and b. above are attached (if the documents are not in the English language). A statement that the English translation is accurate is attached for the document in b. above.**

This collection of information is required by 35 U.S.C. 119, 37 CFR 1.55, and 37 CFR 1.102(d). The information is required to obtain or retain a benefit by the public, which is to file (and by the USPTO to process) an application. Confidentiality is governed by 35 U.S.C. 122 and 37 CFR 1.11 and 1.14. This collection is estimated to take 2 hours to complete, including gathering, preparing, and submitting the completed application form to the USPTO. Time will vary depending upon the individual case. Any comments on the amount of time you require to complete this form and/or suggestions for reducing this burden should be sent to the Chief Information Officer, U.S. Patent and Trademark Office, U.S. Department of Commerce, P.O. Box 1450, Alexandria, VA 22313-1450. DO NOT SEND FEES OR COMPLETED FORMS TO THIS ADDRESS.

Approved for use through 01/31/2012. OMB 0651-0058
U.S.Patent and Trademark Office; U.S. DEPARTMENT OF COMMERCE
Under the Paperwork Reduction Act of 1995, no persons are required to respond to a collection of information unless it displays a valid OMB control number.

REQUEST FOR PARTICIPATION IN THE PCT-PPH PILOT PROGRAM BETWEEN THE JPO AND THE USPTO

(continued)

Application No.:	12/914,939
First Named Inventor:	TAKESHI KAWASHIMA

d. **(1) An information disclosure statement listing the documents cited in the international work products (ISR, WO/ISA, WO/IPEA, IPER) of the corresponding PCT application.**

☐ Is attached

☑ Has already been filed in the above-identified U.S. application on 2010/11/03

(2) Copies of all documents (except) for U.S. patents or U.S. patent application publications)

☐ Are attached.

☑ Have already been filed in the above-identified U.S. application on 2011/05/25

II. Claims Correspondence Table:

Claims in US Application	Patentable Claims in the corresponding PCT Application	Explanation regarding the correspondence
1	1	Both claims are substantially same.
2	2	Both claims are substantially same.
3	3	Both claims are substantially same.
4	4	Substantially same except for claim dependency.
5	5	Both claims are substantially same.
6	6	Both claims are substantially same.
7	7	Substantially same except for claim dependency.
8	8	Substantially same except for claim dependency.
9	9	Substantially same except for claim dependency.
10	10	Both claims are substantially same.

III. All the claims in the US application sufficiently correspond to the patentable claims in the corresponding PCT application.

Signature /Edward Kmett/	Date Dec. 7, 2011
Name (Print/Typed) Edward A. Kmett	Registration Number 42,746

Privacy Act Statement

The **Privacy Act of 1974 (P.L. 93-579)** requires that you be given certain information in connection with your submission of the attached form related to a patent application or patent. Accordingly, pursuant to the requirements of the Act, please be advised that: (1) the general authority for the collection of this information is 35 U.S.C. 2(b)(2); (2) furnishing of the information solicited is voluntary; and (3) the principal purpose for which the information is used by the U.S. Patent and Trademark Office is to process and/or examine your submission related to a patent application or patent. If you do not furnish the requested information, the U.S. Patent and Trademark Office may not be able to process and/or examine your submission, which may result in termination of proceedings or abandonment of the application or expiration of the patent.

The information provided by you in this form will be subject to the following routine uses:

1. The information on this form will be treated confidentially to the extent allowed under the Freedom of Information Act (5 U.S.C. 552) and the Privacy Act (5 U.S.C 552a). Records from this system of records may be disclosed to the Department of Justice to determine whether disclosure of these records is required by the Freedom of Information Act.
2. A record from this system of records may be disclosed, as a routine use, in the course of presenting evidence to a court, magistrate, or administrative tribunal, including disclosures to opposing counsel in the course of settlement negotiations.
3. A record in this system of records may be disclosed, as a routine use, to a Member of Congress submitting a request involving an individual, to whom the record pertains, when the individual has requested assistance from the Member with respect to the subject matter of the record.
4. A record in this system of records may be disclosed, as a routine use, to a contractor of the Agency having need for the information in order to perform a contract. Recipients of information shall be required to comply with the requirements of the Privacy Act of 1974, as amended, pursuant to 5 U.S.C. 552a(m).
5. A record related to an International Application filed under the Patent Cooperation Treaty in this system of records may be disclosed, as a routine use, to the International Bureau of the World Intellectual Property Organization, pursuant to the Patent Cooperation Treaty.
6. A record in this system of records may be disclosed, as a routine use, to another federal agency for purposes of National Security review (35 U.S.C. 181) and for review pursuant to the Atomic Energy Act (42 U.S.C. 218(c)).
7. A record from this system of records may be disclosed, as a routine use, to the Administrator, General Services, or his/her designee, during an inspection of records conducted by GSA as part of that agency's responsibility to recommend improvements in records management practices and programs, under authority of 44 U.S.C. 2904 and 2906. Such disclosure shall be made in accordance with the GSA regulations governing inspection of records for this purpose, and any other relevant (*i.e.*, GSA or Commerce) directive. Such disclosure shall not be used to make determinations about individuals.
8. A record from this system of records may be disclosed, as a routine use, to the public after either publication of the application pursuant to 35 U.S.C. 122(b) or issuance of a patent pursuant to 35 U.S.C. 151. Further, a record may be disclosed, subject to the limitations of 37 CFR 1.14, as a routine use, to the public if the record was filed in an application which became abandoned or in which the proceedings were terminated and which application is referenced by either a published application, an application open to public inspection or an issued patent.
9. A record from this system of records may be disclosed, as a routine use, to a Federal, State, or local law enforcement agency, if the USPTO becomes aware of a violation or potential violation of law or regulation.

PATENT COOPERATION TREATY

PCT

INTERNATIONAL SEARCH REPORT

(PCT Article 18 and Rules 43 and 44)

Applicant's or agent's file reference 10083032WO01	**FOR FURTHER ACTION**	see Form PCT/ISA/220 as well as, where applicable, item 5 below.
International application No. PCT/JP2010/004783	International filing date *(day/month/year)* 28 July, 2010 (28.07.2010)	(Earliest) Priority Date *(day/month/year)* 30 July, 2009 (30.07.2009)
Applicant CANON KABUSHIKI KAISHA		

This international search report has been prepared by this International Searching Authority and is transmitted to the applicant according to Article 18. A copy is being transmitted to the International Bureau.

This international search report consists of a total of 2 sheets.

☐ It is also accompanied by a copy of each prior art document cited in this report.

1. **Basis of the report**
   a. With regard to the **language**, the international search was carried out on the basis of:
      ☑ the international application in the language in which it was filed.
      ☐ a translation of the international application into _____ which is the language of a translation furnished for the purposes of international search (Rules 12.3(a) and 23.1(b)).
   b. ☐ This international search report has been established taking into account the **rectification of an obvious mistake** authorized by or notified to this Authority under Rule 91 (Rule 43.6*bis*(a)).
   c. ☐ With regard to any **nucleotide and/or amino acid sequence** disclosed in the international application, see Box No. I.

2. ☐ **Certain claims were found unsearchable** (see Box No. II).

3. ☐ **Unity of invention is lacking** (see Box No. III).

4. With regard to the **title**,
   ☑ the text is approved as submitted by the applicant.
   ☐ the text has been established by this Authority to read as follows:

5. With regard to the **abstract**,
   ☑ the text is approved as submitted by the applicant.
   ☐ the text has been established, according to Rule 38.2, by this Authority as it appears in Box No. IV. The applicant may, within one month from the date of mailing of this international search report, submit comments to this Authority.

6. With regard to the **drawings**,
   a. the figure of the **drawings** to be published with the abstract is Figure No. 5A-5B
      ☐ as suggested by the applicant.
      ☐ as selected by this Authority, because the applicant failed to suggest a figure.
      ☑ as selected by this Authority, because this figure better characterizes the invention.
   b. ☐ none of the figures is to be published with the abstract.

INTERNATIONAL SEARCH REPORT

International application No.
PCT/JP2010/004783

A. CLASSIFICATION OF SUBJECT MATTER
H01S5/183(2006.01)i, *H01L21/3065*(2006.01)i

According to International Patent Classification (IPC) or to both national classification and IPC

B. FIELDS SEARCHED

Minimum documentation searched (classification system followed by classification symbols)
H01S5/183, H01L21/3065

Documentation searched other than minimum documentation to the extent that such documents are included in the fields searched

Jitsuyo Shinan Koho	1922-1996	Jitsuyo Shinan Toroku Koho	1996-2010
Kokai Jitsuyo Shinan Koho	1971-2010	Toroku Jitsuyo Shinan Koho	1994-2010

Electronic data base consulted during the international search (name of data base and, where practicable, search terms used)

C. DOCUMENTS CONSIDERED TO BE RELEVANT

Category*	Citation of document, with indication, where appropriate, of the relevant passages	Relevant to claim No.
A	JP 2004-111766 A (Toshiba Corp.), 08 April 2004 (08.04.2004), entire text; all drawings (Family: none)	1-10

☐ Further documents are listed in the continuation of Box C. ☐ See patent family annex.

* Special categories of cited documents:
"A" document defining the general state of the art which is not considered to be of particular relevance
"E" earlier application or patent but published on or after the international filing date
"L" document which may throw doubts on priority claim(s) or which is cited to establish the publication date of another citation or other special reason (as specified)
"O" document referring to an oral disclosure, use, exhibition or other means
"P" document published prior to the international filing date but later than the priority date claimed
"T" later document published after the international filing date or priority date and not in conflict with the application but cited to understand the principle or theory underlying the invention
"X" document of particular relevance; the claimed invention cannot be considered novel or cannot be considered to involve an inventive step when the document is taken alone
"Y" document of particular relevance; the claimed invention cannot be considered to involve an inventive step when the document is combined with one or more other such documents, such combination being obvious to a person skilled in the art
"&" document member of the same patent family

Date of the actual completion of the international search 17 August, 2010 (17.08.10)	Date of mailing of the international search report 31 August, 2010 (31.08.10)
Name and mailing address of the ISA/ Japanese Patent Office Facsimile No.	Authorized officer Telephone No.

PATENT COOPERATION TREATY

From the
INTERNATIONAL SEARCHING AUTHORITY

To:

OKABE, Yuzuru

No. 602, Fuji Bldg.,
2-3, Marunouchi, 3-chome,
Chiyoda-ku, Tokyo
1000005 Japan

PCT

WRITTEN OPINION OF THE
INTERNATIONAL SEARCHING AUTHORITY

(PCT Rule 43*bis*.1)

Date of mailing *(day/month/year)*	31. 08. 2010
Applicant's or agent's file reference 10083032WO01	**FOR FURTHER ACTION** See paragraph 2 below

International application No.	International filing date *(day/month/year)*	Priority date *(day/month/year)*
PCT/JP2010/004783	28. 07. 2010	30. 07. 2009

International Patent Classification (IPC) or both national classification and IPC
Int.Cl. H01S5/183 (2006. 01)i, H01L21/3065(2006. 01)i

Applicant
CANON KABUSHIKI KAISHA

1. This opinion contains indications relating to the following items:

- [x] Box No. I Basis of the opinion
- [ ] Box No. II Priority
- [ ] Box No. III Non-establishment of opinion with regard to novelty, inventive step and industrial applicability
- [ ] Box No. IV Lack of unity of invention
- [x] Box No. V Reasoned statement under Rule 43*bis*.1(a)(i) with regard to novelty, inventive step and industrial applicability; citations and explanations supporting such statement
- [ ] Box No. VI Certain documents cited
- [ ] Box No. VII Certain defects in the international application
- [ ] Box No. VIII Certain observations on the international application

2. **FURTHER ACTION**

If a demand for international preliminary examination is made, this opinion will be considered to be a written opinion of the International Preliminary Examining Authority ("IPEA") except that this does not apply where the applicant chooses an Authority other than this one to be the IPEA and the chosen IPEA has notified the International Bureau under Rule 66.1*bis*(b) that written opinions of this International Searching Authority will not be so considered.

If this opinion is, as provided above, considered to be a written opinion of the IPEA, the applicant is invited to submit to the IPEA a written reply together, where appropriate, with amendments, before the expiration of 3 months from the date of mailing of Form PCT/ISA/220 or before the expiration of 22 months from the priority date, whichever expires later.

For further options, see Form PCT/ISA/220.

Name and mailing address of the ISA/	Date of completion of this opinion	Authorized officer
Japanese Patent Office	17 August, 2010 (17. 08. 2010)	
Facsimile No.		Telephone No.

WRITTEN OPINION OF THE INTERNATIONAL SEARCHING AUTHORITY

International application No.

Box No. I Basis of this opinion

1. With regard to the **language**, this opinion has been established on the basis of:

   ☑ the international application in the language in which it was filed.

   ☐ a translation of the international application into _____ which is the language of a translation furnished for the purposes of international search (Rules 12.3(a) and 23.1(b)).

2. ☐ This opinion has been established taking into account the **rectification of an obvious mistake** authorized by or notified to this Authority under Rule 91 (Rule 43*bis*.1(a))

3. With regard to any **nucleotide and/or amino acid sequence** disclosed in the international application, this opinion has been established on the basis of a sequence listing filed or furnished:

   a. (means)

   ☐ on paper

   ☐ in electronic form

   b. (time)

   ☐ in the international application as filed

   ☐ together with the international application in electronic form

   ☐ subsequently to this Authority for the purposes of search

4. ☐ In addition, in the case that more than one version or copy of a sequence listing has been filed or furnished, the required statements that the information in the subsequent or additional copies is identical to that in the application as filed or does not go beyond the application as filed, as appropriate, were furnished.

5. Additional comments:

WRITTEN OPINION OF THE INTERNATIONAL SEARCHING AUTHORITY

International application No.

Box No. V **Reasoned statement under Rule 43*bis*.1(a)(i) with regard to novelty, inventive step and industrial applicability; citations and explanations supporting such statement**

1. Statement

Novelty (N)	Claims	1 - 10	YES
	Claims		NO
Inventive step (IS)	Claims	1 - 10	YES
	Claims		NO
Industrial applicability (IA)	Claims	1 -10	YES
	Claims		NO

2. Citations and explanations:

Citation 1: JP2004-111766 A (Toshiba Corp),
08 April 2004 (08. 04. 2004),
entire text; all drawings
(Family: none)

Claims 1 - 10
The invention according to claims 1 - 10 involves an inventive step against the citation cited in the International Search Report.

特許協力条約

PCT

国際調査報告

（法８条、法施行規則第40、41条）
〔ＰＣＴ18条、ＰＣＴ規則43、44〕

受領印 10.9.-1 岡部国際特許事務所

出願人又は代理人の書類記号　10083032W001	今後の手続きについては、様式ＰＣＴ／ＩＳＡ／２２０及び下記５を参照すること。	
国際出願番号 ＰＣＴ／ＪＰ２０１０／００４７８３	国際出願日 (日.月.年)　２８．０７．２０１０	優先日 (日.月.年)　３０．０７．２００９
出願人（氏名又は名称） キヤノン株式会社		

国際調査機関が作成したこの国際調査報告を法施行規則第41条（ＰＣＴ18条）の規定に従い出願人に送付する。
この写しは国際事務局にも送付される。

この国際調査報告は、全部で　2　ページである。

☐ この調査報告に引用された先行技術文献の写しも添付されている。

１．国際調査報告の基礎
ａ．言語に関し、この国際調査は以下のものに基づき行った。
☑ 出願時の言語による国際出願
☐ 出願時の言語から国際調査のための言語である＿＿＿＿＿＿語に翻訳された、この国際出願の翻訳文（ＰＣＴ規則12.3(a)及び23.1(b)）

ｂ．☐ この国際調査報告は、ＰＣＴ規則91の規定により国際調査機関が認めた又は国際調査機関に通知された明らかな誤りの訂正を考慮して作成した（ＰＣＴ規則43.6の2(a)）。

ｃ．☐ この国際出願は、ヌクレオチド又はアミノ酸配列を含んでいる（第Ｉ欄参照）。

２．☐ 請求の範囲の一部の調査ができない（第Ⅱ欄参照）。

３．☐ 発明の単一性が欠如している（第Ⅲ欄参照）。

４．発明の名称は　☑ 出願人が提出したものを承認する。
☐ 次に示すように国際調査機関が作成した。

＿＿＿＿＿＿＿＿＿＿＿＿＿＿＿＿

５．要約は　☑ 出願人が提出したものを承認する。
☐ 第Ⅳ欄に示されているように、法施行規則第47条第１項（ＰＣＴ規則38.2）の規定により国際調査機関が作成した。出願人は、この国際調査報告の発送の日から１月以内にこの国際調査機関に意見を提出することができる。

６．図面に関して
ａ．要約書とともに公表される図は、
第　5A-5B　図とする。☐ 出願人が示したとおりである。
☐ 出願人は図を示さなかったので、国際調査機関が選択した。
☑ 本図は発明の特徴を一層よく表しているので、国際調査機関が選択した。

ｂ．☐ 要約とともに公表される図はない。

国際調査報告

国際出願番号　ＰＣＴ／ＪＰ２０１０／００４７８３

Ａ．　発明の属する分野の分類（国際特許分類（ＩＰＣ））

Int.Cl.　H01S5/183(2006.01)i, H01L21/3065(2006.01)i

Ｂ．　調査を行った分野

調査を行った最小限資料（国際特許分類（ＩＰＣ））

Int.Cl.　H01S5/183, H01L21/3065

最小限資料以外の資料で調査を行った分野に含まれるもの

日本国実用新案公報	１９２２－１９９６年
日本国公開実用新案公報	１９７１－２０１０年
日本国実用新案登録公報	１９９６－２０１０年
日本国登録実用新案公報	１９９４－２０１０年

国際調査で使用した電子データベース（データベースの名称、調査に使用した用語）

Ｃ．　関連すると認められる文献

引用文献のカテゴリー＊	引用文献名　及び一部の箇所が関連するときは、その関連する箇所の表示	関連する請求項の番号
A	JP 2004-111766 A (株式会社東芝) 2004.04.08, 全文, 全図 (ファミリーなし)	1-10

☐　Ｃ欄の続きにも文献が列挙されている。

☐　パテントファミリーに関する別紙を参照。

＊　引用文献のカテゴリー

「Ａ」特に関連のある文献ではなく、一般的技術水準を示すもの

「Ｅ」国際出願日前の出願または特許であるが、国際出願日以後に公表されたもの

「Ｌ」優先権主張に疑義を提起する文献又は他の文献の発行日若しくは他の特別な理由を確立するために引用する文献（理由を付す）

「Ｏ」口頭による開示、使用、展示等に言及する文献

「Ｐ」国際出願日前で、かつ優先権の主張の基礎となる出願の日の後に公表された文献

「Ｔ」国際出願日又は優先日後に公表された文献であって出願と矛盾するものではなく、発明の原理又は理論の理解のために引用するもの

「Ｘ」特に関連のある文献であって、当該文献のみで発明の新規性又は進歩性がないと考えられるもの

「Ｙ」特に関連のある文献であって、当該文献と他の１以上の文献との、当業者にとって自明である組合せによって進歩性がないと考えられるもの

「&」同一パテントファミリー文献

国際調査を完了した日	国際調査報告の発送日
１７．０８．２０１０	３１．０８．２０１０

国際調査機関の名称及びあて先	特許庁審査官（権限のある職員）	４Ｒ	９２７７
日本国特許庁（ＩＳＡ／ＪＰ） 郵便番号１００－８９１５ 東京都千代田区霞が関三丁目４番３号	宮崎　園子 電話番号　０３－３５８１－１１０１　内線　３４７１		

特許協力条約

発信人　日本国特許庁（国際調査機関）

代理人
　岡部　譲
様

あて名
〒100-0005
日本国東京都千代田区丸の内３丁目２番３号富士ビル６０２号

PCT

国際調査報告及び国際調査機関の見解書
又は国際調査報告を作成しない旨の決定
の送付の通知書
（法施行規則第41条）
［ＰＣＴ規則44.1］

	発送日（日.月.年）　３１．０８．２０１０
出願人又は代理人の書類記号　10083032W001	今後の手続きについては、下記１及び４を参照。
国際出願番号　ＰＣＴ／ＪＰ２０１０／００４７８３	国際出願日（日.月.年）　２８．０７．２０１０
出願人（氏名又は名称）キヤノン株式会社	

１．☑ 国際調査報告及び国際調査機関の見解書が作成されたこと、及びこの送付書とともに送付することを、出願人に通知する。
ＰＣＴ19条の規定に基づく補正書及び説明書の提出
出願人は、国際出願の請求の範囲を補正することができる（ＰＣＴ規則46参照）。
いつ　補正書の提出期間は、通常国際調査報告の送付の日から２月である。
どこへ　直接次の場所へ　The International Bureau of WIPO
34, chemin des Colombettes
1211 Geneva 20, Switzerland
Facsimile No.: +41 22 338 82 70
詳細な手続については、添付用紙の備考を参照すること。

２．☐ 国際調査報告が作成されないこと、及び法第8条第2項（ＰＣＴ17条(2)(a)）の規定による国際調査報告を作成しない旨の決定及び国際調査機関の見解書をこの送付書とともに送付することを、出願人に通知する。

３．☐ 法施行規則第44条（ＰＣＴ規則40.2）に規定する追加手数料の納付に対する異議の申立てに関して、出願人に下記の点を通知する。
☐ 異議の申立てと当該異議についての決定を、その異議の申し立てと当該異議についての決定の両方を指定官庁へ送付することを求める出願人の請求とともに、国際事務局へ送付した。
☐ 当該異議についての決定は、まだ行われていない。決定されしだい出願人に通知する。

４．今後の手続：　出願人は次の点に注意すること。
優先日から１８月経過後、国際出願は国際事務局によりすみやかに国際公開される。出願人が公開の中止又は延期を望むときは、国際出願又は優先権の主張の取下げの通知がＰＣＴ規則90の2.1及び90の2.3にそれぞれ規定されているように、国際公開の事務的な準備が完了する前に国際事務局に到達しなければならない。
出願人は、国際調査機関の見解書に対して、非公式コメントを提出することができる。国際事務局は、国際予備審査報告が作成された場合又は作成される場合を除いて、このコメントをすべての指定官庁に送付する。これらのコメントは公開されるが、優先日から３０月が経過するまでは公開されない。
いくつかの指定官庁については、出願人が国内段階の開始を優先日から３０月まで（官庁によってはさらに遅くまで）延期することを望むときは、優先日から１９月以内に、国際予備審査の請求書が提出されなければならない。そうでなければ、出願人はそれらの指定官庁に対して優先日から２０月以内に、国内段階の開始のための所定の手続を取らなければならない。
その他の指定官庁については、１９月以内に国際予備審査の請求書が提出されない場合にも、３０月の（あるいはさらに遅い）期限が適用される。
様式ＰＣＴ／ＩＢ／３０１の付属書類を参照。個々の指定官庁で適用される期限の詳細については、ＰＣＴ出願人の手引、国内段階を参照。

名称及びあて名 日本国特許庁（ＩＳＡ／ＪＰ） 郵便番号１００－８９１５ 東京都千代田区霞が関三丁目４番３号	権限のある職員 特　許　庁　長　官 電話番号　０３－３５８１－１１０１　内線　３４７１	４Ｒ　９２７７

注　　意

1．国際調査報告の発送日から起算する条約第19条（1）及び規則46.1に従う国際事務局への補正期間に注意してください。

2．条約22条（2）に規定する期間に注意してください。

3．法律又は契約等の制限により、国際調査報告に記載した非特許文献の写しの一部又は全てが送付されない場合があります。

4．文献の写しの請求について

国際調査報告に記載した文献の複写

特許庁にこれらの引用文献の写しを請求することもできますが、独立行政法人工業所有権情報・研修館（特許庁庁舎２階）で公報類の閲覧・複写および公報以外の文献複写等の取り扱いをしています。

〔担当及び照会先〕

〒１００－００１３　東京都千代田区霞が関３丁目４番３号（特許庁庁舎２階）

独立行政法人工業所有権情報・研修館

【公 報 類】　閲覧部　ＴＥＬ　03－3581－1101　内線3811～2

【公報以外】　資料部　ＴＥＬ　03－3581－1101　内線3831～3

注意　特許庁に対して文献の写しの請求をすることができる期間は、国際出願日から７年です。

様式ＰＣＴ／ＩＳＡ／２２０の備考

この備考は、ＰＣＴ19条の規定に基づく補正書の提出に関する基本的な指示を与えるためのものである。この備考は特許協力条約並びにこの条約に基づく規則及び実施細則の規定に基づいている。この備考とそれらの規定とが相違する場合には、後者が適用される。詳細な情報については、ＰＣＴ出願人の手引も参照すること。

ＰＣＴ19条の規定に基づく補正書の提出に関する指示

出願人は、国際調査報告及び国際調査機関の見解書を受領した後、国際出願の請求の範囲を補正する機会が一回ある。しかし、国際出願のすべての部分（請求の範囲、明細書及び図面）が、国際予備審査の手続においても補正できるもので、例えば出願人が仮保護のために補正書を公開することを希望する場合又は国際公開前に請求の範囲を補正する別の理由がある場合を除き、通常ＰＣＴ19条の規定に基づく補正書を提出する必要はないことを強調しておく。さらに、仮保護は一部の国のみで与えられるだけであることも強調しておく（ＰＣＴ出願人の手引、附録Ｂ参照）。

国際調査機関がＰＣＴ17条(2)の規定により国際調査報告を作成しない旨の決定をしたときは、ＰＣＴ19条の規定により請求の範囲を補正することができないことに、出願人は注意されたい（ＰＣＴ出願人の手引き、国際段階、第296段落参照）。

補正の対象となるもの

ＰＣＴ19条の規定により請求の範囲のみ補正することができる。
国際段階においてＰＣＴ34条の規定に基づく国際予備審査の手続きにおいて請求の範囲を（更に）補正することができる。
明細書及び図面は、ＰＣＴ34条の規定に基づく国際予備審査の手続においてのみ補正することができる。
国内段階に移行する際、ＰＣＴ28条（又はＰＣＴ41条）の規定により、国際出願のすべての部分を補正することができる。

いつ

国際調査報告の送付の日から２月又は優先日から１６月の内どちらか遅く満了するほうの期間内。しかし、その期間の満了後であっても国際公開の技術的な準備の完了前に国際事務局が補正を受領した場合には、その補正書は、期間内に受理されたものとみなすことを強調しておく（ＰＣＴ規則46.1）。

補正書を提出すべきところ

補正書は、国際事務局のみに提出でき、受理官庁又は国際調査機関には提出してはいけない（ＰＣＴ規則46.2）。
国際予備審査の請求書を提出した／する場合については、以下を参照すること。

どのように

１以上の請求の範囲の削除、１以上の新たな請求の範囲の追加、又は１以上の請求の範囲の記載の補正による。
すでに提出したすべての請求の範囲を差し替えるための完全な一式の請求の範囲を含む差し替え用紙を提出しなければならない。請求の範囲を削除する場合、その他の請求の範囲の番号を付け直す必要はない。請求の範囲の番号を付け直す場合には、アラビア数字で連続番号で付け直さなければならない（実施細則205号(a)）。
補正は国際公開の言語で行う。

補正書にどのような書類を添付しなければならないか

書簡（ＰＣＴ実施細則第205号(b)）

補正書には書簡を添付しなければならない。
書簡は国際出願及び補正された請求の範囲とともに公開されることはない。これを「ＰＣＴ19条(1)に規定する説明書」と混同してはならない（「ＰＣＴ19条(1)に規定する説明書」については、以下を参照）。
書簡は、英語又は仏語を選択しなければならない。ただし、国際出願の言語が英語の場合、書簡は英語で、仏語の場合、書簡は仏語で記載しなければならない。
書簡には、出願時の請求の範囲と補正された請求の範囲との相違について表示しなければならない。特に、国際出願に記載した各請求の範囲との関連で次の表示（２以上の請求の範囲についての同一の表示する場合は、まとめることができる。）をしなければならない。

(i) この請求の範囲は変更しない。
(ii) この請求の範囲は削除する。
(iii) この請求の範囲は追加である。
(iv) この請求の範囲は出願時の１以上の請求の範囲と差し替える。
(v) この請求の範囲は出願時の請求の範囲の分割の結果である。

次に、添付する書簡中での、補正についての説明の例を示す。

１．［請求の範囲の一部の補正によって請求の範囲の項数が４８から５１になった場合］：
“請求の範囲１－２９、３１、３２、３４、３５、３７－４８項は、同じ番号のもとに補正された請求の範囲と置き換えられた。請求の範囲３０、３３及び３６項は変更なし。新たに請求の範囲４９－５１項が追加された。”

２．［請求の範囲の全部の補正によって請求の範囲の項数が１５から１１になった場合］：
“請求の範囲１－１５項は、補正された請求の範囲１－１１項に置き換えられた。”

３．［原請求の範囲の項数が１４で、補正が一部の請求の範囲の削除と新たな請求の範囲の追加を含む場合］：
“請求の範囲１－６及び１４項は変更なし。請求の範囲７－１３は削除。新たに請求の範囲１５、１６及び１７項を追加。”又は
“請求の範囲７－１３は削除。新たに請求の範囲１５、１６及び１７項を追加。その他の全ての請求の範囲は変更なし。”

４．［各種の補正がある場合］：
“請求の範囲１－１０項は変更なし。請求の範囲１１－１３、１８及び１９項は削除。請求の範囲１４、１５及び１６項は補正された請求の範囲１４項に置き換えられた。請求の範囲１７項は補正された請求の範囲１５、１６及び１７項に分割された。新たに請求の範囲２０及び２１項が追加された。”

“ＰＣＴ19条(1)の規定に基づく説明書”（ＰＣＴ規則46.4）

補正書には、補正並びにその補正が明細書及び図面に与える影響についての説明書を提出することができる（明細書及び図面はＰＣＴ19条(1)の規定に基づいては補正できない）。

説明書は、国際出願及び補正された請求の範囲とともに公開される。

説明書は、国際公開の言語で作成しなければならない。

説明書は、簡潔でなければならず、英語の場合又は英語に翻訳した場合に５００語を越えてはならない。

説明書は、出願時の請求の範囲と補正された請求の範囲との相違を示す書簡と混同してはならない。説明書を、その書簡に代えることはできない。説明書は別紙で提出しなければならず、見出しを付すものとし、その見出しは“ＰＣＴ19条(1)の規定に基づく説明書”の語句を用いることが望ましい。

説明書には、国際調査報告又は国際調査報告に列記された文献との関連性に関して、これらを誹謗する意見を記載してはならない。国際調査報告に列記された特定の請求の範囲に関連する文献についての言及は、当該請求の範囲の補正に関してのみ行うことができる。

国際予備審査の請求書が提出されている場合

ＰＣＴ19条の規定に基づく補正書及び添付する説明書の提出の時に国際予備審査の請求書が既に提出されている場合には、出願人は、補正書（及び説明書）を国際事務局に提出すると同時にその写し及び必要な場合、その翻訳文を国際予備審査機関にも提出することが望ましい（ＰＣＴ規則55.3(a)、62.2の第１文を参照）。詳細は国際予備審査請求書（ＰＣＴ／ＩＰＥＡ／４０１）の注意書参照。

国際予備審査の請求がされた場合は、国際予備審査機関が国際調査機関としては行動しておらず、ＰＣＴ規則66.1の2(b)の規定による国際事務局への通告がなされているという特定の場合を除いて、国際調査機関の見解書は国際予備審査機関の見解書とみなされる。国際予備審査の請求がされると、様式ＰＣＴ／ＩＳＡ２２０の送付日から３月又は優先日から２２月のうちいずれか遅く満了する期限が経過するまでに、出願人は国際予備審査機関に、適当な場合は補正書とともに、答弁書を提出することができる（ＰＣＴ規則43の2.1(c)）。

国内段階に移行するための国際出願の翻訳に関して

国内段階に移行する際、ＰＣＴ19条の規定に基づいて補正された請求の範囲の翻訳を出願時の請求の範囲の翻訳の代わりに又は追加して、指定官庁／選択官庁に提出しなければならないこともあるので、出願人は注意されたい。

指定官庁／選択官庁の詳細な要求については、ＰＣＴ出願人の手引きの国内段階を参照。

特許協力条約

発信人　日本国特許庁（国際調査機関）

代理人
岡部　譲
様

あて名
〒100-0005
日本国東京都千代田区丸の内３丁目２番３号富士ビル６０２号

10.9.-1
岡部国際特許事務所

ＰＣＴ
国際調査機関の見解書
（法施行規則第40条の2）
〔ＰＣＴ規則43の2.1〕

発送日（日.月.年）	３１．０８．２０１０
出願人又は代理人の書類記号　10083032W001	今後の手続きについては、下記２を参照すること。

国際出願番号	国際出願日（日.月.年）	優先日（日.月.年）
ＰＣＴ／ＪＰ２０１０／００４７８３	２８．０７．２０１０	３０．０７．２００９

国際特許分類（ＩＰＣ）Int.Cl. H01S5/183(2006.01)i, H01L21/3065(2006.01)i

出願人（氏名又は名称）
キヤノン株式会社

１．この見解書は次の内容を含む。
- [x] 第Ⅰ欄　見解の基礎
- [ ] 第Ⅱ欄　優先権
- [ ] 第Ⅲ欄　新規性、進歩性又は産業上の利用可能性についての見解の不作成
- [ ] 第Ⅳ欄　発明の単一性の欠如
- [x] 第Ⅴ欄　ＰＣＴ規則43の2.1(a)(i)に規定する新規性、進歩性又は産業上の利用可能性についての見解、それを裏付けるための文献及び説明
- [ ] 第Ⅵ欄　ある種の引用文献
- [ ] 第Ⅶ欄　国際出願の不備
- [ ] 第Ⅷ欄　国際出願に対する意見

２．今後の手続き
国際予備審査の請求がされた場合は、出願人がこの国際調査機関とは異なる国際予備審査機関を選択し、かつ、その国際予備審査機関がＰＣＴ規則66.1の2(b)の規定に基づいて国際調査機関の見解書を国際予備審査機関の見解書とみなさない旨を国際事務局に通知していた場合を除いて、この見解書は国際予備審査機関の最初の見解書とみなされる。

この見解書が上記のように国際予備審査機関の見解書とみなされる場合、様式ＰＣＴ／ＩＳＡ／２２０を送付した日から３月又は優先日から２２月のうちいずれか遅く満了する期限が経過するまでに、出願人は国際予備審査機関に、適当な場合は補正書とともに、答弁書を提出することができる。

さらなる選択肢は、様式ＰＣＴ／ＩＳＡ／２２０を参照すること。

３．さらなる詳細は、様式ＰＣＴ／ＩＳＡ／２２０の備考を参照すること。

見解書を作成した日
１７．０８．２０１０

名称及びあて先 日本国特許庁（ＩＳＡ／ＪＰ） 郵便番号１００－８９１５ 東京都千代田区霞が関三丁目４番３号	特許庁審査官（権限のある職員）　４Ｒ　９２７７ 宮崎　園子 電話番号　０３－３５８１－１１０１　内線　３４７１

国際調査機関の見解書

国際出願番号　ＰＣＴ／ＪＰ２０１０／００４７８３

第Ｉ欄　見解の基礎

１．言語に関し、この見解書は以下のものに基づき作成した。

☑ 出願時の言語による国際出願

☐ 出願時の言語から国際調査のための言語である ＿＿＿＿＿＿ 語に翻訳された、この国際出願の翻訳文（ＰＣＴ規則12.3(a)及び23.1(b)）

２．☐ この見解書は、ＰＣＴ規則 91 の規定により国際調査機関が認めた又は国際調査機関に通知された明らかな誤りの訂正を考慮して作成した（ＰＣＴ規則 43 の 2.1(b)）。

３．この国際出願で開示されたヌクレオチド又はアミノ酸配列に関して、提出された以下の配列表に基づき見解書を作成した。

ａ．提出手段　☐ 紙形式

☐ 電子形式

ｂ．提出時期　☐ 出願時の国際出願に含まれていたもの

☐ この国際出願と共に電子形式により提出されたもの

☐ 出願後に、調査のために、この国際調査機関に提出されたもの

４．☐ さらに、複数の版の配列表又は配列表の写しを提出した場合、出願後に提出した配列の写し若しくは追加して提出した配列の写しが、出願時に提出した配列と同一である旨又は出願時の開示を超える事項を含まない旨の陳述書の提出があった。

５．補足意見：

国際調査機関の見解書

国際出願番号　ＰＣＴ／ＪＰ２０１０／００４７８３

第Ｖ欄　新規性、進歩性又は産業上の利用可能性についてのＰＣＴ規則 43 の 2.1(a)(i)に定める見解、それを裏付ける文献及び説明

１．　見解

新規性（N）	請求項	１－１０	有
	請求項		無
進歩性（ＩＳ）	請求項	１－１０	有
	請求項		無
産業上の利用可能性（ＩＡ）	請求項	１－１０	有
	請求項		無

２．　文献及び説明

文献１：JP 2004-111766 A（株式会社東芝）2004.04.08，全文，全図（ファミリーなし）

請求の範囲１－１０
請求項１－１０に係る発明は、国際調査報告で引用された文献に対して進歩性を有する。

【書類名】請求の範囲
【請求項１】
半導体に微細な構造を形成する微細構造の製造方法であって、
基板上に、第一のＧａＮ系半導体層を形成する第一の工程と、
前記第一の工程で形成された前記第一のＧａＮ系半導体層に、エッチングを用いて第一の細孔を形成する第二の工程と、
前記第二の工程で形成された前記第一の細孔の径を、前記基板の面内方向に該第一の細孔の径よりも細くした第二の細孔を形成するため、窒素を含むガス雰囲気中で８５０℃以上、９５０℃以下の温度により熱処理を行う第三の工程と、
を有することを特徴とする微細構造の製造方法。
【請求項２】
前記第三の工程における熱処理の温度が、８５０℃以上、９００℃以下であることを特徴とする請求項１に記載の微細構造の製造方法。
【請求項３】
前記第三の工程の熱処理において、モル比であるＩＩＩ／Ｎ（窒素）比が前記第一の工程のＩＩＩ／Ｎ比より少ない条件で、ＩＩＩ族原料を供給することを特徴とする請求項２に記載の微細構造の製造方法。
【請求項４】
前記第三の工程の後に、更に熱処理を行う第四の工程を有し、
窒素源を含むガス雰囲気中で、前記第三の工程における熱処理の温度より高い温度により熱処理を行い、前記第二の細孔の上部を第一のＧａＮ系半導体で塞ぐことを特徴とする請求項１から３のいずれか１項に記載の微細構造の製造方法。
【請求項５】
前記第四の工程における熱処理の温度が、１０００℃以上であることを特徴とする請求項４に記載の微細構造の製造方法。
【請求項６】
前記第四の工程の熱処理において、ＩＩＩ族原料を供給することにより前記第一のＧａＮ系半導体層上に第二のＧａＮ系半導体層を成長させ、前記第二の細孔の上部を塞ぐことを特徴とする請求項４に記載の微細構造の製造方法。
【請求項７】
前記細孔のアスペクト比が１以上であることを特徴とする請求項１から６のいずれか１項に記載の微細構造の製造方法。
【請求項８】
前記細孔の径は１μｍ以下であることを特徴とする請求項１から７のいずれか１項に記載の微細構造の製造方法。
【請求項９】
請求項１から８のいずれか１項に記載の微細構造の製造方法が、フォトニック結晶あるいは２次元周期構造を構成する複数配列された細孔を作製する際に用いられる製造方法であることを特徴とする微細構造の製造方法。
【請求項１０】
前記フォトニック結晶あるいは２次元周期構造が、面発光レーザを構成するフォトニック結晶あるいは２次元周期構造であることを特徴とする請求項９に記載の微細構造の製造方法。

WHAT IS CLAIMED IS:

1. A manufacturing method of a microstructure for forming a microscopic structure in a semiconductor, comprising:

a first step of forming a first GaN semiconductor layer on a substrate;

a second step of forming a first hole by using etching on the first GaN semiconductor layer formed in the first step; and

a third step of performing heat-treatment at a temperature from 850°C to 950°C inclusive under a gas atmosphere including nitrogen, in order to form a second hole in which a diameter of the first hole formed in the second step is made narrower than the diameter of the first hole in an in-plane direction of the substrate.

2. The manufacturing method of a microstructure according to claim 1, wherein a temperature of the heat-treatment in the third step is from 850°C to 900°C inclusive.

3. The manufacturing method of a microstructure according to claim 2, wherein in the heat-treatment of the third step, a group III raw material is supplied on a condition that a III/N (nitrogen) ratio that is a mole ratio is lower than a III/N ratio of the first step.

4. The manufacturing method of a microstructure according to any one of claims 1 to 3, further comprising:

a fourth step for performing heat-treatment after

the third step, wherein in a gas atmosphere including a nitrogen source, heat-treatment is performed at a temperature higher than the temperature of the heat-treatment in the third step, and an upper portion of the second hole is closed with a first GaN semiconductor.

5. The manufacturing method of a microstructure according to claim 4, wherein the temperature of the heat-treatment in the fourth step is 1000°C or higher.

6. The manufacturing method of a microstructure according to claim 4, wherein in the heat-treatment of the fourth step, a second GaN semiconductor layer is grown on the first GaN semiconductor layer by supply of a group III raw material to close an upper portion of the second hole.

7. The manufacturing method of a microstructure according to any one of claims 1 to 6, wherein an aspect ratio of the hole is 1 or more.

8. The manufacturing method of a microstructure according to any one of claims 1 to 7, wherein a diameter of the hole is 1 μm or less.

9. A manufacturing method of a microstructure, wherein the manufacturing method of a microstructure according to any one of claims 1 to 8 is a production method used at a time of production of a plurality of arranged holes which configure a photonic crystal or a 2D periodic structure.

10. The manufacturing method of a microstructure according to claim 9, wherein the photonic crystal or 2D

periodic structure is a photonic crystal or a 2D periodic structure which configures a surface-emitting laser.

IN THE UNITED STATES PATENT AND TRADEMARK OFFICE

In re PATENT APPLICATION of
Inventor: **TAKESHI KAWASHIMA et al.**
Application No. **12/914,939**
Title: **MANUFACTURING METHOD OF MICROSTRUCTURE**

VERIFIED TRANSLATION OF DOCUMENTS CONCERNING JAPANESE PATENT APPLICATION

I, **MASAMI SAITO** a Japanese Patent Attorney registered No. **12866**, of Okabe International Patent Office at No. 602, Fuji Bldg., 2-3, Marunouchi 3-chome, Chiyoda-ku, Tokyo, Japan, hereby declare under penalty of perjury under the laws of the United States of America that I have a thorough knowledge of Japanese and English languages, and that the attached are accurate translations of the documents listed below concerning International Application No. **PCT/JP2010/004783:**

Allowable Claims
International Search Report and Written Opinion of the International Searching Authority

Signed this 7 day of December, 2011

Masami Saito

MASAMI SAITO

UNITED STATES PATENT AND TRADEMARK OFFICE

Commissioner for Patents
United States Patent and Trademark Office
P.O. Box 1450
Alexandria, VA 22313-1450
www.uspto.gov

FITZPATRICK CELLA HARPER & SCINTO
1290 Avenue of the Americas
NEW YORK NY 10104-3800

MAILED
JAN 09 2012
OFFICE OF PETITIONS

In re Application of
Takeshi Kawashima et al.
Application No.: 12/914,939
Filed: October 28, 2010
Attorney Docket No.: 03500.183032
For: Manufacturing Method of Microstructure

: DECISION ON REQUEST TO
: PARTICIPATE IN THE PATENT
: PROSECUTION HIGHWAY
: PROGRAM AND PETITION
: TO MAKE SPECIAL UNDER
: 37 CFR 1.102(a)

This is a decision on the request to participate in the PCT Patent Prosecution Highway (PCT-PPH) pilot program and the petition under 37 CFR 1.102(a), filed on December 7, 2011, to make the above-identified application special.

The request and petition are **DENIED**.

Discussion

A grantable request to participate in the PCT-PPH pilot program and petition to make special require:

(1) The U.S. application must have an eligible relationship to one or more PCT applications where the ISA or IPEA are the JPO, EPO, KIPO, IPAU, SIPO, Russia, Spain, Finland, Austria, or USPTO;

(2) At least one claim in the PCT application has novelty, inventive step, and industrial applicability and must be free of any observations in Box VIII in the latest work product in the international stage or applicant must identify and explain why the claim(s) is/are not subject to the observation in Box VIII;

(3) Applicant must submit a copy of the claim(s) from the PCT application(s) that have novelty, inventive step, and industrial applicability along with an English translation thereof and a statement that the English translation is accurate, if the claims are not in the English language;

(4) All the claims in the U.S. application must sufficiently correspond or be amended to sufficiently correspond to the claim(s) that have novelty, inventive step, and industrial applicability in the PCT application(s);

(5) Examination of the U.S. application has not begun;

(6) Applicant must submit a copy of the latest international work product from the PCT application indicating that the claim(s) have novelty, inventive step, and industrial applicability along with an English translation thereof.

(7) Applicant must submit an IDS listing the documents cited by the PCT examiner in the international work product along with copies of documents except U.S. patents or U.S. patent application publications.

(8) Applicant is required to submit a claims correspondence table in English which indicates how all the claims in the U.S. application correspond to the claims indicated as having novelty, inventive step and industrial applicability in the latest international work product.

The request to participate in the PCT-PPH pilot program and petition fails to meet condition (5). A Notice of Allowance was mailed on January 6, 2012. As such examination of this application has begun.

Telephone inquiries concerning this decision should be directed to Kimberly Inabinet at 571-272-4618.

All other inquiries concerning the examination or status of the application is accessible in the PAIR system at http://www.uspto.gov/ebc/index.html.

Anthony Knight
Director
Office of Petitions

UNITED STATES PATENT AND TRADEMARK OFFICE

Commissioner for Patents
United States Patent and Trademark Office
P.O. Box 1450
Alexandria, VA 22313-1450
www.uspto.gov

In re Application of
ADOLPH RUSSO

Application No. 12914970

Filed:

Attorney Docket No. ADR.P.1100B

:DECISION ON PETITION TO MAKE SPECIAL
:UNDER 37 CFR 1.102(c)(1)

This is a decision on the electronic petition under 37 CFR 1.102 (c)(1), filed 29-OCT-2010 to make the above-identified application special based on applicant's age as set forth in MPEP § 708.02, Section IV.

The petition is **GRANTED**.

A grantable petition to make an application special under 37 CFR 1.102(c)(1), MPEP § 708.02, Section IV: Applicant's Age must include a statement by applicant or a registered practitioner having evidence that applicant is at least 65 years of age. No fee is required.

Accordingly, the above-identified application has been accorded "special" status and will be taken up for action by the examiner upon the completion of all pre-examination processing.

Telephone inquiries concerning this electronic decision should be directed to the Electronic Business Center at 866-217-9197.

All other inquiries concerning either the examination or status of the application should be directed to the Technology Center.

IN THE UNITED STATES PATENT AND TRADEMARK OFFICE

First Named Inventor: Allen Michael RITTER	)
Confirmation No.: 7043	)
	)
Serial No.: 12/915,116	)
	)
Filing Date: October 29, 2010	)
	)
Atty Docket No.: 243726-1	)

Commissioner for Patents
P.O. Box 1450
Alexandria, VA 22313-1450

Statement Concerning the Basis for the Special Status

SIR:

Applicant respectfully submits that Special Status is sought on the basis that the present invention materially contributes to the development of renewable energy resources or energy conservation.

The undersigned attorney may be contacted at the number below to facilitate the resolution of any matters. Please charge any fees that are incurred in connection with this Statement to deposit account no. 09-0470.

Respectfully submitted,

General Electric Company

By : /Douglas D. Zhang/
Douglas D. Zhang
Reg. No. 37,985

Dated: December 20, 2010

GE Global Patent Operation
2 Corporate Drive, Suite 648
Shelton, CT 06484
203-944-6755

Doc Code: PET.GREEN
Document Description: Petition for Green Tech Pilot

PTO/SB/420 (11-10)
Approved for use through 01/31/2011. OMB 0651-0062
U.S. Patent and Trademark Office; U. S. DEPARTMENT OF COMMERCE
Under the Paperwork Reduction Act of 1995, no persons are required to respond to a collection of information unless it displays a valid OMB control number.

PETITION TO MAKE SPECIAL UNDER THE GREEN TECHNOLOGY PILOT PROGRAM

Attorney Docket Number: 243726-1	Application Number (if known): 12/915,116	Filing date: October 29, 2010
First Named Inventor: Allen Michael RITTER		
Title: METHOS AND SYSTEM FOR PROVIDING INCREASED TURBINE OUTPUT FOR DOUBLY FED INDUCTION GENERATOR		

APPLICANT HEREBY REQUESTS TO PARTICIPATE IN THE GREEN TECHNOLOGY PILOT PROGRAM FOR THE ABOVE-IDENTIFIED APPLICATION. See Instruction Sheet on page 2.

This petition must be timely filed electronically using the USPTO electronic filing system, EFS-Web.

1. By filing this petition:

   Applicant is requesting early publication: Applicant hereby requests early publication under 37 CFR 1.219 and the publication fee set forth in 37 CFR 1.18(d) accompanies this request.

2. By filing this petition: applicant is agreeing to make an election without traverse in a telephonic interview and elect an invention that meets the eligibility requirements for the Green Technology Pilot Program, if the Office determines that the claims are not obviously directed to a single invention. See Instruction Sheet.

3. This request is accompanied by statements of special status for the eligibility requirement.

4. The application contains no more than three (3) independent claims and twenty (20) total claims.

5. The application does not contain any multiple dependent claims.

6. Other attachments: Statement Concerning the Basis for the Special Status

Signature /Douglas D. Zhang/	Date December 20, 2010
Name (Print/Typed) Douglas D. Zhang	Registration Number 37,985

Note: *Signatures of all the inventors or assignees of record of the entire interest or their representative(s) are required in accordance with 37 CFR 1.33 and 11.18. Please see 37 CFR 1.4(d) for the form of the signature. If necessary, submit multiple forms for more than one signature see below*.*

☐ *Total of ..... forms are submitted.

The information is required to obtain or retain a benefit by the public which is to file (and by the USPTO to process) an application. Confidentiality is governed by 35 U.S.C. 122 and 37 CFR 1.11 and 1.14. This collection is estimated to take 12 hours to complete, including gathering, preparing, and submitting the completed application form to the USPTO. Time will vary depending upon the individual case. Any comments on the amount of time you require to complete this form and/or suggestions for reducing this burden, should be sent to the Chief Information Officer, U.S. Patent and Trademark Office, U.S. Department of Commerce, P.O. Box 1450, Alexandria, VA 22313-1450. DO NOT SEND FEES OR COMPLETED FORMS TO THIS ADDRESS. **SEND TO: Commissioner for Patents, P.O. Box 1450, Alexandria, VA 22313-1450.**

If you need assistance in completing the form, call 1-800-PTO-9199 and select option 2.

Privacy Act Statement

The **Privacy Act of 1974 (P.L. 93-579)** requires that you be given certain information in connection with your submission of the attached form related to a patent application or patent. Accordingly, pursuant to the requirements of the Act, please be advised that: (1) the general authority for the collection of this information is 35 U.S.C. 2(b)(2); (2) furnishing of the information solicited is voluntary; and (3) the principal purpose for which the information is used by the U.S. Patent and Trademark Office is to process and/or examine your submission related to a patent application or patent. If you do not furnish the requested information, the U.S. Patent and Trademark Office may not be able to process and/or examine your submission, which may result in termination of proceedings or abandonment of the application or expiration of the patent.

The information provided by you in this form will be subject to the following routine uses:

1. The information on this form will be treated confidentially to the extent allowed under the Freedom of Information Act (5 U.S.C. 552) and the Privacy Act (5 U.S.C 552a). Records from this system of records may be disclosed to the Department of Justice to determine whether disclosure of these records is required by the Freedom of Information Act.
2. A record from this system of records may be disclosed, as a routine use, in the course of presenting evidence to a court, magistrate, or administrative tribunal, including disclosures to opposing counsel in the course of settlement negotiations.
3. A record in this system of records may be disclosed, as a routine use, to a Member of Congress submitting a request involving an individual, to whom the record pertains, when the individual has requested assistance from the Member with respect to the subject matter of the record.
4. A record in this system of records may be disclosed, as a routine use, to a contractor of the Agency having need for the information in order to perform a contract. Recipients of information shall be required to comply with the requirements of the Privacy Act of 1974, as amended, pursuant to 5 U.S.C. 552a(m).
5. A record related to an International Application filed under the Patent Cooperation Treaty in this system of records may be disclosed, as a routine use, to the International Bureau of the World Intellectual Property Organization, pursuant to the Patent Cooperation Treaty.
6. A record in this system of records may be disclosed, as a routine use, to another federal agency for purposes of National Security review (35 U.S.C. 181) and for review pursuant to the Atomic Energy Act (42 U.S.C. 218(c)).
7. A record from this system of records may be disclosed, as a routine use, to the Administrator, General Services, or his/her designee, during an inspection of records conducted by GSA as part of that agency's responsibility to recommend improvements in records management practices and programs, under authority of 44 U.S.C. 2904 and 2906. Such disclosure shall be made in accordance with the GSA regulations governing inspection of records for this purpose, and any other relevant (*i.e.*, GSA or Commerce) directive. Such disclosure shall not be used to make determinations about individuals.
8. A record from this system of records may be disclosed, as a routine use, to the public after either publication of the application pursuant to 35 U.S.C. 122(b) or issuance of a patent pursuant to 35 U.S.C. 151. Further, a record may be disclosed, subject to the limitations of 37 CFR 1.14, as a routine use, to the public if the record was filed in an application which became abandoned or in which the proceedings were terminated and which application is referenced by either a published application, an application open to public inspection or an issued patent.
9. A record from this system of records may be disclosed, as a routine use, to a Federal, State, or local law enforcement agency, if the USPTO becomes aware of a violation or potential violation of law or regulation.

UNITED STATES PATENT AND TRADEMARK OFFICE

UNITED STATES DEPARTMENT OF COMMERCE
United States Patent and Trademark Office
Address: COMMISSIONER FOR PATENTS
P.O. Box 1450
Alexandria, Virginia 22313-1450
www.uspto.gov

APPLICATION NO.	FILING DATE	FIRST NAMED INVENTOR	ATTORNEY DOCKET NO.	CONFIRMATION NO.
12/915,116	10/29/2010	Allen Michael Ritter	243726/GEC-118	7043

87853 7590 01/05/2011
Dority & Manning, PA and General Electric Company
Post Office Box 1449
Greenville, SC 29602

EXAMINER

ART UNIT	PAPER NUMBER
2839	

MAIL DATE	DELIVERY MODE
01/05/2011	PAPER

Please find below and/or attached an Office communication concerning this application or proceeding.

The time period for reply, if any, is set in the attached communication.

UNITED STATES PATENT AND TRADEMARK OFFICE

Commissioner for Patents
United States Patent and Trademark Office
P.O. Box 1450
Alexandria, VA 22313-1450
www.uspto.gov

Dority & Manning, PA and General Electric Company
Post Office Box 1449
Greenville SC 29602

In re Application of	:	
Ritter et al.	:	DECISION ON PETITION
Application No. 12/915,116	:	TO MAKE SPECIAL UNDER
Filed: October 29, 2010	:	THE GREEN TECHNOLOGY
Attorney Docket No. 243726/GEC-118	:	PILOT PROGRAM

This is a decision on the petition under 37 CFR 1.102, filed on December 20, 2010, to make the above-identified application special under the pilot program for applications pertaining to Green Technologies as set forth 74 Federal Register Notice 64666 (December 8, 2009) and amended by 75 Federal Register Notice 28554 (May 21, 2010) and 75 Federal Register Notice 69049 (November 10, 2010).

The petition is **GRANTED**.

A grantable petition to make an application special under 37 CFR 1.102 and the pilot program as set forth in 74 FR 64666 must be directed to a nonprovisional application filed under 35 USC 111(a) or be a national stage entry under 35 USC 371, exclusive of any reissue applications.

In order to qualify for special status, the following requirements must be met. 1) The application must have no more than 3 independent claims and no more than 20 total claims. 2) The application must not contain any multiple dependent claims. 3) The petition must state the basis for seeking special status, i.e., the claimed invention either: A) materially enhances the quality of the environment or B) materially contributes to: i) the discovery or development of renewable energy resources, ii) the more efficient utilization and conservation of energy resources, or iii) greenhouse gas emission reduction. 4) If the disclosure is not clear on its face that the claimed invention materially contributes under category (A) or (B), the petition must be accompanied by a statement by the applicant, assignee, or an attorney/agent registered to practice before the Office explaining how the materiality standard is met. 5) A statement that applicant will agree to make an election without traverse in a telephonic interview if a restriction requirement is made by the examiner. 6) The petition to make special must be filed electronically. 7) The petition must be filed at least one day prior to the date that a first Office Action appears in the Patent Application Information Retrieval (PAIR) system. 8) The petition must be accompanied by a request for early publication in compliance with 37 CFR 1.219 and include the publication fee as set forth in 37 CFR 1.18(d).

The requirement for a fee for consideration of the petition to make special for applications pertaining to Green Technologies has been waived.

The instant petition complies with items 1 – 8 above. Accordingly, the above-identified application has been accorded "special" status.

Telephone inquires concerning this decision should be directed to Lee W. Young at 571-272-4549.

The application is being forwarded to the Technology Center Art Unit 2839 for action in its regular turn.

Lee W. Young
Quality Assurance Specialist
Technology Center 2800

Doc Code: PET.GREEN
Document Description: Petition for Green Tech Pilot

PTO/SB/420 (03-11)

PETITION TO MAKE SPECIAL UNDER THE GREEN TECHNOLOGY PILOT PROGRAM

Attorney Docket Number: 242494-1	Application Number (if known): 12/915,124	Filing date: 10-29-2010

First Named Inventor: Michelle Diana GROSS

Title: AIRFLOW DIVERTER FOR A COOLING COMPARTMENT

APPLICANT HEREBY REQUESTS TO PARTICIPATE IN THE GREEN TECHNOLOGY PILOT PROGRAM FOR THE ABOVE-IDENTIFIED APPLICATION. See Instruction Sheet on page 2.

This petition must be timely filed electronically using the USPTO electronic filing system, EFS-Web.

1. By filing this petition:

   Applicant is requesting early publication: Applicant hereby requests early publication under 37 CFR 1.219 and the publication fee set forth in 37 CFR 1.18(d) accompanies this request.

2. By filing this petition: applicant is agreeing to make an election without traverse in a telephonic interview and elect an invention that meets the eligibility requirements for the Green Technology Pilot Program, if the Office determines that the claims are not obviously directed to a single invention. See Instruction Sheet.

3. This request is accompanied by statements of special status for the eligibility requirement.

4. The application contains no more than three (3) independent claims and twenty (20) total claims.

5. The application does not contain any multiple dependent claims.

6. Other attachments: Statement Concerning the Basis for the Special Status

Signature /Allison W. Mages/	Date 12/10/11
Name (Print/Typed) Allison W. Mages	Registration Number 57,275

Note: Signatures of all the inventors or assignees of record of the entire interest or their representative(s) are required in accordance with 37 CFR 1.33 and 11.18. Please see 37 CFR 1.4(d) for the form of the signature. If necessary, submit multiple forms for more than one signature, see below.*

☐ *Total of _____ forms are submitted.

If you need assistance in completing the form, call 1-800-PTO-9199 and select option 2.

IN THE UNITED STATES PATENT AND TRADEMARK OFFICE

First Named Inventor: Michelle Diana GROSS	)
Confirmation No.: 7053	)
	)
Serial No.: 12/915,124	)
	)
Filing Date: 10-29-2010	)
	)
Atty Docket No.: 242494-1 (US)	)

VIA EFS
Commissioner for Patents
P.O. Box 1450
Alexandria, VA 22313-1450

Statement Concerning the Basis for the Special Status

SIR:

The field of the invention relates generally to a cooling compartment, and more particularly, to air circulation in a cooling compartment of a cooling appliance. (See [0001])

Generally, a cooling appliance includes a fresh food compartment and a freezer compartment which are partitioned from each other to store various foods at low temperatures in appropriate states for a relatively long time. (See [0002])

A freezer basket located inside the freezer compartment provides storage space for food items which are to be kept frozen. An evaporator assembly usually located behind the freezer basket is typically mounted to the back wall on the inside of the freezer compartment. The evaporator assembly includes an evaporator inlet and evaporator outlet used in conjunction to circulate the cold air in and around food items located within the freezer basket. Generally, cooled air travels from the evaporator outlet to the evaporator inlet. An evaporator fan of

the evaporator outlet blows cold air out of the evaporator assembly into the interior of the freezer compartment where the freezer basket is located. Preferably, the cold air exiting the evaporator outlet fully circulates within the entire freezer compartment before returning to the evaporator assembly through the evaporator inlet. (See [0003])

Unfortunately, cold air exiting the fan cover of the evaporator fan tends to return to the evaporator inlet through the shortest possible airflow path. This creates a problem in conventional freezer compartments because the shortest airflow path between the evaporator outlet and inlet avoids complete circulation throughout the entire freezer compartment, which prevents adequate airflow within the freezer basket. The airflow path in conventional freezers creates a "short-circuit" between the evaporator outlet and inlet. (See [0004])

This occurs because nothing in conventional freezer compartment provides a barrier that prevents cooled air exiting evaporator outlet from traveling directly to evaporator inlet. Therefore, cooled air in conventional freezer compartment is able to flow directly from evaporator outlet to evaporator inlet through, for example, air gap which exists between conventional basket and back wall. Cooled air exiting conventional evaporator outlet is not diverted into basket before returning to evaporator inlet. Therefore, the cooling capacity of conventional freezer compartment is lessened. (See [0006])

Thus, the short-circuit airflow path caused by the configuration of conventional freezers prevents effective cooling of many food items located within the freezer basket. As a result, the energy efficiency of conventional

freezers and cooling compartments with similar configurations is compromised. (See [0007])

An aspect of the present invention relates to an airflow diverter for a cooling compartment. The cooling compartment includes a plurality of walls, one of the walls having an evaporator outlet and an evaporator inlet. An airflow diverter is disposed between the evaporator outlet and the evaporator inlet. (See [0009])

The airflow diverter forms a barrier between the evaporator outlet and the evaporator inlet by preventing direct flow of air from the evaporator outlet to the evaporator inlet. Because air entering the cooling compartment is prevented from immediately flowing back to the evaporator inlet, the airflow path of cooled air exiting the evaporator outlet is lengthened. As such, a more efficient cooling system for a cooling compartment is provided because air can fully circulate within the cooling compartment before returning to the evaporator inlet. The airflow diverter also creates a more uniform temperature when used in a cooling compartment. (See [0010])

Therefore, Applicant respectfully submits that Special Status is sought on the basis that the present invention materially contributes to the more efficient utilization and conservation of energy resources.

The undersigned representative may be contacted at the number below to facilitate the resolution of any matters. Please charge any fees that are incurred in connection with this Statement to deposit account no. 09-0470.

Respectfully submitted,

General Electric Company

By : /Allison W. Mages/
Allison W. Mages
Reg. No. 57,275

Dated: December 10, 2011

GE Global Patent Operation
2 Corporate Drive, Suite 648
Shelton, CT 06484
203-944-6730

UNITED STATES PATENT AND TRADEMARK OFFICE

UNITED STATES DEPARTMENT OF COMMERCE
United States Patent and Trademark Office
Address: COMMISSIONER FOR PATENTS
P.O. Box 1450
Alexandria, Virginia 22313-1450
www.uspto.gov

APPLICATION NO.	FILING DATE	FIRST NAMED INVENTOR	ATTORNEY DOCKET NO.	CONFIRMATION NO.
12/915,124	10/29/2010	Michelle Diana GROSS	242494-1	7053

52082 7590 12/16/2011
General Electric Company
GE Global Patent Operation
2 Corporate Drive, Suite 648
Shelton, CT 06484

EXAMINER

ART UNIT	PAPER NUMBER
3744	

NOTIFICATION DATE	DELIVERY MODE
12/16/2011	ELECTRONIC

Please find below and/or attached an Office communication concerning this application or proceeding.

The time period for reply, if any, is set in the attached communication.

Notice of the Office communication was sent electronically on above-indicated "Notification Date" to the following e-mail address(es):

gpo.mail@ge.com
allyson.carnaroli@ge.com

UNITED STATES PATENT AND TRADEMARK OFFICE

Commissioner for Patents
United States Patent and Trademark Office
P.O. Box 1450
Alexandria, VA 22313-1450
www.uspto.gov

General Electric Company
GE Global Patent Operation
2 Corporate Drive, Suite 648
Shelton CT 06484

In re Application of	:	
GROSS, MICHELLE DIANA et al	:	DECISION ON PETITION
Application No. 12/915,124	:	TO MAKE SPECIAL UNDER
Filed: Oct. 29, 2010	:	THE GREEN TECHNOLOGY
Attorney Docket No. 242494-1	:	PILOT PROGRAM

This is a decision on the petition under 37 CFR 1.102, filed Dec. 10, 2011, to make the above-identified application special under the pilot program for applications pertaining to Green Technologies as set forth in 74 Federal Register Notice 64666 (December 8, 2009) and amended by 75 Federal Register Notice 28554 (May 21, 2010) and 75 Federal Register Notice 69049 (November 10, 2010).

The petition is **dismissed**.

A grantable petition to make an application special under 37 CFR 1.102 and the pilot program as set forth in 74 FR 64666 must be directed to a nonprovisional application filed under 35 USC 111(a) or be a national stage entry under 35 USC 371, exclusive of any reissue applications.

If reconsideration of this decision is desired, a petition for reconsideration must be filed within ONE (1) MONTH OR THIRTY (30) DAYS from the mail date of this decision, whichever is longer. No extension of this time limit can be granted under 37 CFR 1.136(a) or (b). The petition for reconsideration should include an exhaustive attempt to provide the lacking item(s) noted below, since, after a decision on the petition for reconsideration, no further reconsideration or review of the matter will be undertaken by the Director.

In order to qualify for special status, the following requirements must be met. 1) The application must have no more than 3 independent claims and no more than 20 total claims. 2) The application must not contain any multiple dependent claims. 3) The petition must state the basis for seeking special status, i.e., the claimed invention either: A) materially enhances the quality of the environment or B) materially contributes to: i) the discovery or development of renewable

energy resources, ii) the more efficient utilization and conservation of energy resources, or iii) greenhouse gas emission reduction. 4) If the disclosure is not clear on its face that the claimed invention materially contributes under category (A) or (B), the petition must be accompanied by a statement by the applicant, assignee, or an attorney/agent registered to practice before the Office explaining how the materiality standard is met. 5) A statement that applicant will agree to make an election without traverse in a telephonic interview if a restriction requirement is made by the examiner. 6) The petition to make special must be filed electronically. 7) The petition must be filed at least one day prior to the date that a first Office Action appears in the Patent Application Information Retrieval (PAIR) system. 8) The petition must be accompanied by a request for early publication in compliance with 37 CFR 1.219 and include the publication fee as set forth in 37 CFR 1.18(d).

The requirement for a fee for consideration of the petition to make special for applications pertaining to Green Technologies has been waived. The petition lacks item # 4.

In regard to item 4, petitioner should note that the instant petition includes a statement identifying the basis for the special status (i.e., whether the instant invention (1) materially enhances the quality of the environment or materially contributes to (2) development of renewable energy resources or energy conservation, or (3) greenhouse gas reduction) as required by sections II and III of the notice. However, as stated in the notice, applicant must also provide a statement pertaining to the materiality standard if the application disclosure is not clear on its face as to the materiality of the basis for the special status of the invention. This petition lacks such a statement and it is not agreed that the application on its face meets that materiality standard. Petitioner states that the claimed invention relates to the green technology. This is not convincing. For example, it is not clear how the claimed "plurality of walls, wherein one of the walls has an evaporator outlet positioned proximate an evaporator inlet; and an airflow diverter positioned between the evaporator outlet and the evaporator inlet" will provide and enhance the quality of the environment or contribute to development of renewable energy resources or energy conservation or greenhouse gas reduction. There is no connection between the claimed cooling compartment and the green technology.

Any reconsideration of this decision should be submitted through the USPTO electronic filing system, EFS-Web, and selecting the document description of "Petition for Green Tech Pilot" on the EFS-Web screen. Telephone inquiries concerning this decision should be directed to Henry C. Yuen at 571-272-4856. The application will be forwarded to the Technology Center Art Unit 3784 for action in its regular turn.

/Henry C. Yuen/

Henry C. Yuen
Quality Assurance Specialist
Technology Center 3700

IN THE UNITED STATES PATENT AND TRADEMARK OFFICE

First Named Inventor: Michelle Diana GROSS	)
Confirmation No.: 7053	)
	)
Serial No.: 12/915,124	)
	)
Filing Date: 10-29-2010	)
	)
Atty Docket No.: 242494-1 (US)	)

Commissioner for Patents
P.O. Box 1450
Alexandria, VA 22313-1450

Request for Reconsideration

SIR:

This is responsive to the Decision on Petition, dated as mailed 16 December 2011, in the above-referenced application.

Applicant respectfully requests reconsideration of Applicant's Petition to Make Special on the basis that the present invention materially contributes to more efficient utilization and conservation of energy resources.

The Decision to Make Special Under the Green Technology Pilot Program (hereinafter "the Decision") states that it is not agreed that the application on its face meets the materiality standard. The Decision alleges that Applicant's statement that the claimed invention relates to green technology is not convincing. The Decision states that it is not clear how the claimed plurality of walls, wherein one of the walls has an evaporator outlet positioned proximate an evaporator inlet; and an airflow diverter positioned between the evaporator outlet and the evaporator inlet will provide and enhance the quality of the environment or contribute to the development of renewable energy resources or energy

conservation or greenhouse gas reduction. Decision also alleges that there is no connection between the cooling compartment and green technology. Applicant does not agree with the comments made in the Decision.

Applicant respectfully submits that the present invention is directed to a cooling compartment, and more particularly, to air circulation in a cooling compartment of a cooling appliance. (see at least paragraph [0001]).

Generally, a cooling appliance includes a fresh food compartment and a freezer compartment which are partitioned from each other to store various foods at low temperatures in appropriate states for a relatively long time. (see at least paragraph [0002]).

A freezer basket located inside the freezer compartment provides storage space for food items which are to be kept frozen. An evaporator assembly usually located behind the freezer basket is typically mounted to the back wall on the inside of the freezer compartment. The evaporator assembly includes an evaporator inlet and evaporator outlet used in conjunction to circulate the cold air in and around food items located within the freezer basket. Generally, cooled air travels from the evaporator outlet to the evaporator inlet. An evaporator fan of the evaporator outlet blows cold air out of the evaporator assembly into the interior of the freezer compartment where the freezer basket is located. Preferably, the cold air exiting the evaporator outlet fully circulates within the entire freezer compartment before returning to the evaporator assembly through the evaporator inlet. (see at least paragraph [0003]).

Unfortunately, cold air exiting the fan cover of the evaporator fan tends to return to the evaporator inlet through the shortest possible airflow path. This creates a problem in conventional freezer compartments because the shortest airflow path between the evaporator outlet and inlet avoids complete circulation throughout the entire freezer compartment, which prevents adequate airflow within the freezer basket. The airflow path in conventional freezers creates a "short-circuit" between the evaporator outlet and inlet. (see at least paragraph [0004]).

This occurs because nothing in conventional freezer compartment provides a barrier that prevents cooled air exiting evaporator outlet from traveling directly to evaporator inlet. The short-circuit airflow path caused by the configuration of conventional freezers prevents effective cooling of many food items located within the freezer basket. As a result, the energy efficiency of conventional freezers and cooling compartments with similar configurations is compromised. (see at least paragraphs [0006] and [0007]).

The embodiments described in the present invention relates to an airflow diverter for a cooling compartment. The cooling compartment includes a plurality of walls, one of the walls having an evaporator outlet and an evaporator inlet. An airflow diverter is disposed between the evaporator outlet and the evaporator inlet. (see at least paragraph [0009]).

Implementation of an airflow diverter provides a number of advantages over the conventional freezer compartment not utilizing an airflow diverter in accordance with the present invention. For example, less electrical energy is

used in freezer compartments in accordance with the present invention to produce the same amount of cooling as conventional freezer compartments. Moreover, freezer compartments in accordance with the embodiments of the present invention also afford more comprehensive circulation patterns, which create a more uniform temperature within the freezer compartment. (see at least paragraph [0040]).

By decreasing the amount of energy needed to provide the same amount of cooling as conventional freezer compartments, embodiments of the present invention materially contribute to more efficient utilization and conservation of energy resources.

The undersigned attorney may be contacted at the number below to facilitate the resolution of any matters. Please charge any fees that are incurred in connection with this Statement to deposit account no. 09-0470.

Respectfully submitted,

General Electric Company

By : /Allison W Mages/
Allison Weiner Mages
Reg. No. 57,275

Dated: January 14, 2012

GE Global Patent Operation
2 Corporate Drive, Suite 648
Shelton, CT 06484
203-944-6755

UNITED STATES PATENT AND TRADEMARK OFFICE

UNITED STATES DEPARTMENT OF COMMERCE
United States Patent and Trademark Office
Address: COMMISSIONER FOR PATENTS
P.O. Box 1450
Alexandria, Virginia 22313-1450
www.uspto.gov

APPLICATION NO.	FILING DATE	FIRST NAMED INVENTOR	ATTORNEY DOCKET NO.	CONFIRMATION NO.
12/915,124	10/29/2010	Michelle Diana GROSS	242494-1	7053

52082 7590 01/31/2012
General Electric Company
GE Global Patent Operation
2 Corporate Drive, Suite 648
Shelton, CT 06484

EXAMINER

ART UNIT	PAPER NUMBER
3744	

NOTIFICATION DATE	DELIVERY MODE
01/31/2012	ELECTRONIC

Please find below and/or attached an Office communication concerning this application or proceeding.

The time period for reply, if any, is set in the attached communication.

Notice of the Office communication was sent electronically on above-indicated "Notification Date" to the following e-mail address(es):

gpo.mail@ge.com
allyson.carnaroli@ge.com

UNITED STATES PATENT AND TRADEMARK OFFICE

Commissioner for Patents
United States Patent and Trademark Office
P.O. Box 1450
Alexandria, VA 22313-1450
www.uspto.gov

General Electric Company
GE Global Patent Operation
2 Corporate Drive, Suite 648
Shelton CT 06484

JAN 3 1 2012

In re Application of	:	
Gross et al.	:	DECISION ON PETITION
Application No. 12/915,124	:	TO MAKE SPECIAL UNDER
Filed: 10/29/2010	:	THE GREEN TECHNOLOGY
Attorney Docket No. **242494-1**	:	PILOT PROGRAM

This is a decision on the request for reconsideration, filed 1/14/2012, to make the above-identified application special under the pilot program for applications pertaining to Green Technologies as set forth in 74 Federal Register Notice 64666 (December 8, 2009) and amended by 75 Federal Register Notice 28554 (May 21, 2010) and 75 Federal Register Notice 69049 (November 10, 2010).

The petition is **GRANTED**.

A grantable petition to make an application special under 37 CFR 1.102 and the pilot program as set forth in 74 FR 64666 must be directed to a nonprovisional application filed under 35 USC 111(a) or be a national stage entry under 35 USC 371, exclusive of any reissue applications.

In order to qualify for special status, the following requirements must be met. 1) The application must have no more than 3 independent claims and no more than 20 total claims. 2) The application must not contain any multiple dependent claims. 3) The petition must state the basis for seeking special status, i.e., the claimed invention either: A) materially enhances the quality of the environment or B) materially contributes to: i) the discovery or development of renewable energy resources, ii) the more efficient utilization and conservation of energy resources, or iii) greenhouse gas emission reduction. 4) If the disclosure is not clear on its face that the claimed invention materially contributes under category (A) or (B), the petition must be accompanied by a statement by the applicant, assignee, or an attorney/agent registered to practice before the Office explaining how the materiality standard is met. 5) A statement that applicant will agree to make an election without traverse in a telephonic interview if a restriction requirement is made by the examiner. 6) The petition to make special must be filed electronically. 7) The petition must be filed at least one day prior to the date that a first Office Action appears in the Patent Application Information Retrieval (PAIR) system. 8) The petition must be accompanied by a

request for early publication in compliance with 37 CFR 1.219 and include the publication fee as set forth in 37 CFR 1.18(d).

The requirement for a fee for consideration of the petition to make special for applications pertaining to Green Technologies has been waived.

The instant petition complies with items 1 – 8 above. Accordingly, the above-identified application has been accorded "special" status.

Telephone inquires concerning this decision should be directed to Tom Dunn at 571-272-1171.

The application is being forwarded to the Technology Center Art Unit 3744 for action on the merits commensurate with this decision.

/Tom Dunn/

Tom Dunn
Quality Assurance Specialist
Technology Center 1700

UNITED STATES PATENT AND TRADEMARK OFFICE

UNITED STATES DEPARTMENT OF COMMERCE
United States Patent and Trademark Office
Address: COMMISSIONER FOR PATENTS
P.O. Box 1450
Alexandria, Virginia 22313-1450
www.uspto.gov

APPLICATION NO.	FILING DATE	FIRST NAMED INVENTOR	ATTORNEY DOCKET NO.	CONFIRMATION NO.
12/915,138	10/29/2010	Yuuki TAUCHI	370574US0CONT	7074

22850 7590 02/11/2011
OBLON, SPIVAK, MCCLELLAND MAIER & NEUSTADT, L.L.P.
1940 DUKE STREET
ALEXANDRIA, VA 22314

EXAMINER

ART UNIT	PAPER NUMBER
1785	

NOTIFICATION DATE	DELIVERY MODE
02/11/2011	ELECTRONIC

Please find below and/or attached an Office communication concerning this application or proceeding.

The time period for reply, if any, is set in the attached communication.

Notice of the Office communication was sent electronically on above-indicated "Notification Date" to the following e-mail address(es):

patentdocket@oblon.com
oblonpat@oblon.com
jgardner@oblon.com

UNITED STATES PATENT AND TRADEMARK OFFICE

Commissioner for Patents
United States Patent and Trademark Office
P.O. Box 1450
Alexandria, VA 22313-1450
www.uspto.gov

FEB 11 2011

CST

In re application of Yuuki Tauchi et al Serial No. 12/915,138 Filed: October 29, 2010 For: AG BASE ALLOY THIN FILM AND SPUTTERING TARGET FOR FORMING AG BASE ALLOY THIN FILM	: : : : : : : :	DECISION ON REQUEST TO PARTICIPATE IN PATENT PROSECUTION HIGHWAY PROGRAM AND PETITION TO MAKE SPECIAL UNDER 37 CFR 1.102(a)

This is a decision on the request to participate in the Patent Prosecution Highway (PPH) program filed December 15, 2010.

The request and petition are **GRANTED**.

A grantable request to participate in the PPH program and petition to make special require:

(1) The U.S. application must validly claim priority under 35 U.S.C. 119(a) to one or more applications filed in the JPO, note where the JPO application with similar claims is not the same application from which the U.S. application claims priority that the applicant must identify the relationship between the JPO application with similar claims and the JPO priority application;

(2) Applicant must submit a copy of:
   a. The allowable/patentable claim(s) from the JPO application(s) or if a copy of the allowable/patentable claims is available via the Dossier Access System (DAS) applicant may request the USPTO to obtain a copy from DAS; however, if the USPTO is unable to obtain a copy from the DAS, the applicant will be required to submit a copy;
   b. An English translation of the allowable/ patentable claim(s), if applicable; and
   c. A statement that the English translation is accurate, if applicable;

(3) Applicant must:
   a. Ensure all the claims in the U.S. application must sufficiently correspond or be amended to sufficiently correspond to the allowable/patentable claim(s) in the JPO application(s); and
   b. Submit a claims correspondence table in English;

(4) Examination of the U.S. application has not begun;

(5) Applicant must submit:
a. Documentation of prior office action:
i. a copy of the office action(s) just prior to the "Decision to Grant a Patent" from each of the JPO application(s) containing the allowable/patentable claims(s) or
ii. if the allowable/patentable claim(s) are from "Notification of Reasons for Refusal" then the Notification of Reasons for Refusal or
iii. if the JPO application is a first action allowance then no office action from the JPO is necessary should be indicated on the request/petition form:
Further, if a copy of the documents from a or b is available via the Dossier Access System (DAS), applicant may request the USPO obtain a copy from the DAS; however, if the USPTO is unable to obtain a copy of the DAS, the applicant will be required to submit a copy;
b. An English language translation of the JPO Office action from (5)(a)(i)-(ii) above if applicable; and
c. A statement that the English translation is accurate; and

(6) Applicant must submit:
a. An IDS listing the documents cited by the JPO examiner in the JPO office action (unless already submitted in this application)
b. Copies of documents except U.S. patents or U.S. patent application publications (unless already submitted in this application).

The request to participate in the PPH program and petition comply with the above requirements. Accordingly, the above-identified application has been accorded "special" status.

The application is being forwarded to the examiner for action on the merits commensurate with this decision.

Any inquiry regarding this decision should be directed to Christine Tierney, Quality Assurance Specialist, at (571) 272-1055.

All other inquiries concerning the examination or status of the application is accessible in the PAIR system at http://www.uspto.gov/ebc/index.html.

/Christine Tierney/

Christine Tierney
Quality Assurance Specialist
Technology Center 1700

UNITED STATES PATENT AND TRADEMARK OFFICE

UNITED STATES DEPARTMENT OF COMMERCE
United States Patent and Trademark Office
Address: COMMISSIONER FOR PATENTS
P.O. Box 1450
Alexandria, Virginia 22313-1450
www.uspto.gov

APPLICATION NO.	FILING DATE	FIRST NAMED INVENTOR	ATTORNEY DOCKET NO.	CONFIRMATION NO.
12/915,179	10/29/2010	Soon Kwon	15738-000098	7143

27572 7590 12/22/2010
HARNESS, DICKEY & PIERCE, P.L.C.
P.O. BOX 828
BLOOMFIELD HILLS, MI 48303

EXAMINER

ART UNIT	PAPER NUMBER
2624	

MAIL DATE	DELIVERY MODE
12/22/2010	PAPER

Please find below and/or attached an Office communication concerning this application or proceeding.

The time period for reply, if any, is set in the attached communication.

UNITED STATES PATENT AND TRADEMARK OFFICE

Commissioner for Patents
United States Patent and Trademark Office
P.O. Box 1450
Alexandria, VA 22313-1450
www.uspto.gov

HARNESS, DICKEY & PIERCE, P.L.C.
P.O. BOX 828
BLOOMFIELD HILLS MI 48303

In re Application of KWON, SOON, et al. Application No. 12/915,179 Filed: October 29, 2010 Attorney Docket No.: **15738-000098**	: : : : : : :	DECISION ON REQUEST TO PARTICIPATE IN PATENT PROSECUTION HIGHWAY PROGRAM AND PETITION TO MAKE SPECIAL UNDER 37 CFR 1.102(a)

This is a decision on the request to participate in the Patent Prosecution Highway (PPH) program and the petition under 37 CFR 1.102(a), filed October 29, 2010, to make the above-identified application special.

The request and petition are **GRANTED**.

A grantable request to participate in the PPH program and petition to make special require:

(1) The U.S. application must validly claim priority under 35 U.S.C. 119(a) to one or more applications filed in the KIPO;
(2) Applicant must submit a copy of the allowable/patentable claim(s) from the KIPO application(s) along with an English translation thereof and a statement that the English translation is accurate;
(3) All the claims in the U.S. application must sufficiently correspond or be amended to sufficiently correspond to the allowable/patentable claim(s) in the KIPO application(s);
(4) Examination of the U.S. application has not begun;
(5) Applicant must submit a copy of all the office actions from each of the KIPO application(s) containing the allowable/patentable claim(s) along with an English translation thereof and a statement that the English translation is accurate; and
(6) Applicant must submit an IDS listing the documents cited by the KIPO examiner in the KIPO office action along with copies of documents except U.S. patents or U.S. patent application publications.

The request to participate in the PPH program and petition comply with the above requirements. Accordingly, the above-identified application has been accorded "special" status.

Telephone inquiries concerning this decision should be directed to Doris To at 571-272-7629.

All other inquiries concerning the examination or status of the application should be directed to Patent Application Information Retrieval (PAIR) system.

The application is being forwarded to the examiner for action on the merits commensurate with this decision.

/Doris To/

Doris To
Quality Assurance Specialist
Technology Center 2600
Communications

SPE RESPONSE FOR CERTIFICATE OF CORRECTION

DATE : 03/15/12

TO SPE OF : ART UNIT: 2612 Attn: BUGG GEORGE A (SPE)

SUBJECT : Request for Certificate of Correction for Appl. No.: 12/915218 Patent No.: RE42991

CofC mailroom date: 03/08/2012

Please respond to this request for a certificate of correction within 7 days.

FOR IFW FILES:

Please review the requested changes/corrections as shown in the **COCIN** document(s) in the IFW application image. No new matter should be introduced, nor should the scope or meaning of the claims be changed.

Please complete the response (see below) and forward the completed response to scanning using document code **COCX**.

FOR PAPER FILES:

Please review the requested changes/corrections as shown in the attached certificate of correction. Please complete this form (see below) and forward it with the file to:

Certificates of Correction Branch (CofC)
Randolph Square – 9D10-A
Palm Location 7580

Note: Please check Specifications & Claims
For the requested correction on PTO/SB/44 Form
Should these amended claims be amended again or not

Tasneem Siddiqui
Certificates of Correction Branch

703-756-1814 & 703-756-1593

Thank You For Your Assistance

The request for issuing the above-identified correction(s) is hereby:
Note your decision on the appropriate box.

x**Approved**	**All** changes apply.
☐ **Approved in Part**	Specify below which changes **do not** apply.
☐ **Denied**	State the reasons for denial below.

Comments: _____

/George Bugg/ 2612
SPE Art Unit

UNITED STATES PATENT AND TRADEMARK OFFICE

Commissioner for Patents
United States Patent and Trademark Office
P.O. Box 1450
Alexandria, VA 22313-1450
www.uspto.gov

In re Application of
Virgil R. Morton

Application No. 12915347

Filed:

Attorney Docket No. 1587-A-17 MAG

:DECISION ON PETITION TO MAKE SPECIAL
:UNDER 37 CFR 1.102(c)(1)

This is a decision on the electronic petition under 37 CFR 1.102 (c)(1), filed 29-OCT-2010 to make the above-identified application special based on applicant's age as set forth in MPEP § 708.02, Section IV.

The petition is **GRANTED**.

A grantable petition to make an application special under 37 CFR 1.102(c)(1), MPEP § 708.02, Section IV: Applicant's Age must include a statement by applicant or a registered practitioner having evidence that applicant is at least 65 years of age. No fee is required.

Accordingly, the above-identified application has been accorded "special" status and will be taken up for action by the examiner upon the completion of all pre-examination processing.

Telephone inquiries concerning this electronic decision should be directed to the Electronic Business Center at 866-217-9197.

All other inquiries concerning either the examination or status of the application should be directed to the Technology Center.

UNITED STATES PATENT AND TRADEMARK OFFICE

Commissioner for Patents
United States Patent and Trademark Office
P.O. Box 1450
Alexandria, VA 22313-1450
www.uspto.gov

MAILED

JUL 11 2011

OFFICE OF PETITIONS

MCNAIR LAW FIRM, P.A.
P.O. BOX 447
GREENVILLE SC 29602-0447

In re Application of	:	
Hulseman, et al.	:	
Application No.: 12/915,351	:	ON PETITION
Filed: October 29, 2010	:	
Attorney Docket No: **051528.00007**	:	

This is in response to the petition under 37 CFR 1.137(b) filed June 22, 2011.

The petition under 37 CFR 1.137(b) is **granted**.

This application became abandoned for failure to respond in a timely manner to the Notice to File Missing Parts of Non-Provisional Application mailed November 10, 2010. The notice set a shortened period for reply of two-months from its mailing date. Extensions of time were available pursuant to 37 CFR 1.136(a). A response was received on April 8, 2011, with a request for an extension within the third month. The response was incomplete and no further responses were received within the allowable period. The application became abandoned on April 11, 2010.

The declaration filed June 22, 2011, is noted.

This application is being directed to the Office of Patent Application Processing for further processing.

Telephone inquiries regarding this decision should be directed to the undersigned at (571) 272-3222.

/Kenya A. McLaughlin/

Kenya A. McLaughlin
Petitions Attorney
Office of Petitions

Doc Code: PET.GREEN
Document Description: Petition for Green Tech Pilot

PTO/SB/420 (11-10)
Approved for use through 01/31/2011. OMB 0651-0062
U.S. Patent and Trademark Office; U. S. DEPARTMENT OF COMMERCE
Under the Paperwork Reduction Act of 1995, no persons are required to respond to a collection of information unless it displays a valid OMB control number.

PETITION TO MAKE SPECIAL UNDER THE GREEN TECHNOLOGY PILOT PROGRAM

Attorney Docket Number: 83161243	Application Number (if known): 12/915,456	Filing date: October 29, 2010
First Named Inventor: Qing Wang et al.		
Title: ENGINE TRANSIENT MITIGATION FOR HYBRID VEHICLES		

APPLICANT HEREBY REQUESTS TO PARTICIPATE IN THE GREEN TECHNOLOGY PILOT PROGRAM FOR THE ABOVE-IDENTIFIED APPLICATION. See Instruction Sheet on page 2.

This petition must be timely filed electronically using the USPTO electronic filing system, EFS-Web.

1. By filing this petition:

   Applicant is requesting early publication: Applicant hereby requests early publication under 37 CFR 1.219 and the publication fee set forth in 37 CFR 1.18(d) accompanies this request.

2. By filing this petition: applicant is agreeing to make an election without traverse in a telephonic interview and elect an invention that meets the eligibility requirements for the Green Technology Pilot Program, if the Office determines that the claims are not obviously directed to a single invention. See Instruction Sheet.

3. This request is accompanied by statements of special status for the eligibility requirement.

4. The application contains no more than three (3) independent claims and twenty (20) total claims.

5. The application does not contain any multiple dependent claims.

6. Other attachments: Statement to Make Special

Signature /Tiffany A. Fidler/	Date 03/16/2011
Name (Print/Typed) Tiffany A. Fidler	Registration Number 65,366

Note: *Signatures of all the inventors or assignees of record of the entire interest or their representative(s) are required in accordance with 37 CFR 1.33 and 11.18. Please see 37 CFR 1.4(d) for the form of the signature. If necessary, submit multiple forms for more than one signature see below*.*

☒ *Total of 1 forms are submitted.

The information is required to obtain or retain a benefit by the public which is to file (and by the USPTO to process) an application. Confidentiality is governed by 35 U.S.C. 122 and 37 CFR 1.11 and 1.14. This collection is estimated to take 12 hours to complete, including gathering, preparing, and submitting the completed application form to the USPTO. Time will vary depending upon the individual case. Any comments on the amount of time you require to complete this form and/or suggestions for reducing this burden, should be sent to the Chief Information Officer, U.S. Patent and Trademark Office, U.S. Department of Commerce, P.O. Box 1450, Alexandria, VA 22313-1450. DO NOT SEND FEES OR COMPLETED FORMS TO THIS ADDRESS. **SEND TO: Commissioner for Patents, P.O. Box 1450, Alexandria, VA 22313-1450.**

If you need assistance in completing the form, call 1-800-PTO-9199 and select option 2.

Under the Paperwork Reduction Act of 1995, no persons are required to respond to a collection of information unless it displays a valid OMB control number.

Instruction Sheet for Petition to Make Special Under the Green Technology Pilot Program

(Not to be Submitted to the USPTO)

The following is a summary of the requirements (for more information see the notices (i) "Pilot Program for Green Technologies Including Greenhouse Gas Reduction," (ii) "Elimination of Classification Requirement in the Green Technology Pilot Program," and (iii) "Expansion and Extension of the Green Technology Pilot Program," available on the USPTO web site at http://www.uspto.gov/patents/init_events/green_tech.jsp):

1) The application must be a non-reissue, non-provisional utility application filed under 35 U.S.C. 111 (a), or an international application that has entered the national stage in compliance with 35 U.S.C. 371, irrespective of the filing date of the application. Reexamination proceedings are excluded from this pilot program.

2) The application must contain three or fewer independent claims and twenty or fewer total claims. The application must not contain any multiple dependent claims. For an application that contains more than three independent claims or twenty total claims, or multiple dependent claims, applicant must file a preliminary amendment in compliance with 37 CFR 1.121 to cancel the excess claims and/or the multiple dependent claims at the time the petition to make special is filed.

3) The claims must be directed to a single invention that materially enhances the quality of the environment, or that materially contributes to: (1) the discovery or development of renewable energy resources; (2) the more efficient utilization and conservation of energy resources; or (3) green house gas emission reduction (see the eligibility requirements of sections II and III of the notice (i) cited above). The petition must include a statement that, if the USPTO determines that the claims are directed to multiple inventions (e.g., in a restriction requirement), applicant will agree to make an election without traverse in a telephonic interview, and elect an invention that meets the eligibility requirements in section II or III of the notice (i) cited above.

4) The petition to make special must be timely filed electronically using the USPTO electronic filing system, EFS-Web, and selecting the document description of "Petition for Green Tech Pilot" on the EFS-Web screen. Applicant should use form PTO/SB/420, which is available as a Portable Document Format (PDF) fillable form in EFS-Web and on the USPTO Web site.

5) The petition to make special must be filed at least one day prior to the date that a first Office action (which may be an Office action containing only a restriction requirement) appears in the Patent Application Information Retrieval (PAIR) system. Applicant may check the status of the application using PAIR.

6) The petition to make special must be accompanied by a request for early publication in compliance with 37 CFR 1.219 and the publication fee set forth in 37 CFR 1.18(d).

Privacy Act Statement

The **Privacy Act of 1974 (P.L. 93-579)** requires that you be given certain information in connection with your submission of the attached form related to a patent application or patent. Accordingly, pursuant to the requirements of the Act, please be advised that: (1) the general authority for the collection of this information is 35 U.S.C. 2(b)(2); (2) furnishing of the information solicited is voluntary; and (3) the principal purpose for which the information is used by the U.S. Patent and Trademark Office is to process and/or examine your submission related to a patent application or patent. If you do not furnish the requested information, the U.S. Patent and Trademark Office may not be able to process and/or examine your submission, which may result in termination of proceedings or abandonment of the application or expiration of the patent.

The information provided by you in this form will be subject to the following routine uses:

1. The information on this form will be treated confidentially to the extent allowed under the Freedom of Information Act (5 U.S.C. 552) and the Privacy Act (5 U.S.C 552a). Records from this system of records may be disclosed to the Department of Justice to determine whether disclosure of these records is required by the Freedom of Information Act.
2. A record from this system of records may be disclosed, as a routine use, in the course of presenting evidence to a court, magistrate, or administrative tribunal, including disclosures to opposing counsel in the course of settlement negotiations.
3. A record in this system of records may be disclosed, as a routine use, to a Member of Congress submitting a request involving an individual, to whom the record pertains, when the individual has requested assistance from the Member with respect to the subject matter of the record.
4. A record in this system of records may be disclosed, as a routine use, to a contractor of the Agency having need for the information in order to perform a contract. Recipients of information shall be required to comply with the requirements of the Privacy Act of 1974, as amended, pursuant to 5 U.S.C. 552a(m).
5. A record related to an International Application filed under the Patent Cooperation Treaty in this system of records may be disclosed, as a routine use, to the International Bureau of the World Intellectual Property Organization, pursuant to the Patent Cooperation Treaty.
6. A record in this system of records may be disclosed, as a routine use, to another federal agency for purposes of National Security review (35 U.S.C. 181) and for review pursuant to the Atomic Energy Act (42 U.S.C. 218(c)).
7. A record from this system of records may be disclosed, as a routine use, to the Administrator, General Services, or his/her designee, during an inspection of records conducted by GSA as part of that agency's responsibility to recommend improvements in records management practices and programs, under authority of 44 U.S.C. 2904 and 2906. Such disclosure shall be made in accordance with the GSA regulations governing inspection of records for this purpose, and any other relevant (*i.e.*, GSA or Commerce) directive. Such disclosure shall not be used to make determinations about individuals.
8. A record from this system of records may be disclosed, as a routine use, to the public after either publication of the application pursuant to 35 U.S.C. 122(b) or issuance of a patent pursuant to 35 U.S.C. 151. Further, a record may be disclosed, subject to the limitations of 37 CFR 1.14, as a routine use, to the public if the record was filed in an application which became abandoned or in which the proceedings were terminated and which application is referenced by either a published application, an application open to public inspection or an issued patent.
9. A record from this system of records may be disclosed, as a routine use, to a Federal, State, or local law enforcement agency, if the USPTO becomes aware of a violation or potential violation of law or regulation.

IN THE UNITED STATES PATENT AND TRADEMARK OFFICE

In re application of:

Group Art Unit: 3747

Qing Wang et al.

Examiner:

Serial No.: 12/915,456

Filed: October 29, 2010

For: ENGINE TRANSIENT MITIGATION FOR HYBRID VEHICLES

Attorney Docket No.: 83161243

STATEMENT SUPPORTING ELIGIBILITY REQUIREMENT OF THE GREEN TECHNOLOGY PILOT PROGRAM

Commissioner for Patents
U.S. Patent and Trademark Office
P.O. Box 1450
Alexandria, VA 22313-1450

Dear Sir:

This Statement of Special Status for the Eligibility Requirement is being filed concurrently with a Petition To Make Special Under the Green Technology Pilot Program (PTO/SB/420), and pursuant to the requirements of 74 Fed. Reg. 64,666 (Dec. 8, 2009), as amended by 75 Fed. Reg. 28, 554 (May 21, 2010) and 75 Fed. Reg. 68049 (Nov. 10, 2010).

Applicant respectfully submits that the above-identified application is eligible for the "Green Technology Pilot Program" as materially contributing to the more efficient utilization and conservation of energy resources or the reduction of greenhouse gas emissions.

As explained in the specification, in a hybrid vehicle, a fast engine transient caused by the fast engine response typically adversely affects the fuel combustion efficiency. The fast engine transient could be a torque transient, power transient, speed transient, or the like. The engine operates under non-optimum settings that require additional fuel compared to that used

during operation under stoichiometric conditions, for producing the same torque. The decreased fuel efficiency caused by the use of additional fuel is mainly due to fuel enrichment of the mixture being injected into the engine. Large air to fuel errors, i.e., a sufficiently high degree of fuel enrichment in the engine, may lead to considerable fuel losses, and low fuel efficiencies.

The claimed invention is directed to a method and system for limiting a fast transient in an engine in a hybrid vehicle. The predicted fuel loss percentage is calculated from an inferred air-fuel ratio (inferred lambda). The rate limit term is calculated from a measured air-fuel ratio (measured lambda) and an engine torque command change rate. The predicted fuel loss percentage and the rate limit term are inputs into a calibration table to determine an engine power rate limit and an engine torque rate limit. An engine torque command is limited using the engine torque rate limit to control a fast engine torque transient for an engine. An engine power command is limited using the engine power rate limit to control the fast engine power transient for the engine.

The claimed invention moderates the fast change rate of the engine command (or fast transient of the engine command) to reduce fuel combustion transients and improve fuel economy for the hybrid vehicle. As such, the claimed invention materially contributes to conservation of energy resources and the reduction of greenhouse gas emissions.

The Application is a non-reissue, non-provisional utility application filed under 35 U.S.C. §111(a). The Application contains no more than three (3) independent claims and twenty (20) total claims. The Application does not contain multiple dependent claims. A first Office action has not yet appeared in the Patent Application Information Retrieval System (PAIR).

The publication fee under 37 C.F.R. § 1.18(d) of $300 has been paid upon filing. Please charge any additional required fees to Deposit Account No. 06-1510 (Ford Global Technologies, LLC).

Respectfully submitted,

Qing Wang et al.

By: /Tiffany A. Fidler/
Tiffany A. Fidler
Reg. No. 65,366
Attorney/Agent for Applicant

Date: 03/16/2011

BROOKS KUSHMAN P.C.
1000 Town Center, 22nd Floor
Southfield, MI 48075-1238
Phone: 248-358-4400
Fax: 248-358-3351

UNITED STATES PATENT AND TRADEMARK OFFICE

UNITED STATES DEPARTMENT OF COMMERCE
United States Patent and Trademark Office
Address: COMMISSIONER FOR PATENTS
P.O. Box 1450
Alexandria, Virginia 22313-1450
www.uspto.gov

APPLICATION NO.	FILING DATE	FIRST NAMED INVENTOR	ATTORNEY DOCKET NO.	CONFIRMATION NO.
12/915,456	10/29/2010	Qing Wang	83161243	7650

28395 7590 05/17/2011
BROOKS KUSHMAN P.C./FGTL
1000 TOWN CENTER
22ND FLOOR
SOUTHFIELD, MI 48075-1238

EXAMINER
TRAN, KHOI H

ART UNIT	PAPER NUMBER
3664	

MAIL DATE	DELIVERY MODE
05/17/2011	PAPER

Please find below and/or attached an Office communication concerning this application or proceeding.

The time period for reply, if any, is set in the attached communication.

UNITED STATES PATENT AND TRADEMARK OFFICE

Commissioner for Patents
United States Patent and Trademark Office
P.O. Box 1450
Alexandria, VA 22313-1450
www.uspto.gov

MAY 17 2011

BROOKS KUSHMAN P.C./FGTL
1000 TOWN CENTER
22ND FLOOR
SOUTHFIELD MI 48075-1238

In re Application of	:	
QING WANG et al.	:	DECISION ON PETITION
Application No. 12/915,456	:	TO MAKE SPECIAL UNDER
Filed: October 29, 2010	:	THE GREEN TECHNOLOGY
Attorney Docket No. 83161243	:	PILOT PROGRAM

This is a decision on the petition under 37 CFR 1.102, filed March 16, 2011 to make the above-identified application special under the pilot program for applications pertaining to Green Technologies as set forth in 74 Federal Register Notice 64666 (December 8, 2009) and amended by 75 Federal Register Notice 28554 (May 21, 2010) and 75 Federal Register Notice 69049 (November 10, 2010).

The petition is **DISMISSED**.

If reconsideration of this decision is desired, a petition for reconsideration must be filed within ONE (1) MONTH OR THIRTY (30) DAYS from the mail date of this decision, whichever is longer. No extension of this time limit can be granted under 37 CFR 1.136(a) or (b). The petition for reconsideration should include an exhaustive attempt to provide the lacking item(s) noted below, since, after a decision on the petition for reconsideration, no further reconsideration or review of the matter will be undertaken by the Director.

A grantable petition to make an application special under 37 CFR 1.102 and the pilot program as set forth in 74 FR 64666 must be directed to a nonprovisional application filed under 35 USC 111(a) or be a national stage entry under 35 USC 371, exclusive of any reissue applications.

In order to qualify for special status, the following requirements must be met. 1) The application must have no more than 3 independent claims and no more than 20 total claims. 2) The application must not contain any multiple dependent claims. 3) The petition must state the basis for seeking special status, i.e., the claimed invention either: A) materially enhances the quality of the environment or B) materially contributes to: i) the discovery or development of renewable energy resources, ii) the more efficient utilization and conservation of energy resources, or iii) greenhouse gas emission reduction. 4) If the disclosure is not clear on its face that the claimed invention materially contributes under category (A) or (B), the petition must be accompanied by a statement by the applicant, assignee, or an attorney/agent registered to practice before the

Office explaining how the materiality standard is met. 5) A statement that applicant will agree to make an election without traverse in a telephonic interview if a restriction requirement is made by the examiner. 6) The petition to make special must be filed electronically. 7) The petition must be filed at least one day prior to the date that a first Office Action appears in the Patent Application Information Retrieval (PAIR) system. 8) The petition must be accompanied by a request for early publication in compliance with 37 CFR 1.219 and include the publication fee as set forth in 37 CFR 1.18(d).

The requirement for a fee for consideration of the petition to make special for applications pertaining to Green Technologies has been waived.

The petition lacks item(s) 4.

In regard to item 4, torque generation is a function of mass air flow into the cylinder, the air-to-fuel ratio, spark timing and engine speed. By using inferred air-fuel ratio and measured air-fuel ratio to determine a rate limited engine power command and a rate limited engine torque command, this method does not necessarily reduce the fast transients caused by engine command. Limiting engine torque rate and engine power rate would have an adverse effect on the drivability of a vehicle. In addition, when a driver's power demand is sporadic such that the rate between acceleration and deceleration is large, no conservation of energy can be realized based on the claimed invention. Furthermore, when the electric battery is not at maximum level, more fuel and engine torque would have to be provided to the generator to recharge the battery such that the system as a whole will not result in conservation of energy. Therefore, petitioner's assertion of the reduction of fuel combustion transients and improve fuel economy for a hybrid vehicle appears to be speculative.

As stated in the notice, the materiality standard does not permit an applicant to speculate as to how a hypothetical end-user might specially apply the invention in a manner than could materially contribute to category (A) or (B). *Also see MPEP § 708.02 (VI).* Accordingly, it is unclear as to how the claimed invention would materially contribute to category (B), and it is not agreed that the application on its face meets that materiality standard.

Any reconsideration of this decision should be submitted through the USPTO electronic filing system, EFS-Web, and selecting the document description of "Petition for Green Tech Pilot" on the EFS-Web screen.

Telephone inquiries concerning this decision should be directed to Lanna Mai at 571-272-6867.

The application is being forwarded to the Technology Center Art Unit 3664 for action in its regular turn.

/Lanna Mai/

Lanna Mai
Quality Assurance Specialist
Technology Center 3600

IN THE UNITED STATES PATENT AND TRADEMARK OFFICE

In re application of:

Qing Wang et al.

Group Art Unit: 3664

Examiner: Khoi H. Tran

Serial No.: 12/915,456

Filed: October 29, 2010

For: ENGINE TRANSIENT MITIGATION FOR HYBRID VEHICLES

Attorney Docket No.: 83161243

REQUEST FOR RECONSIDERATION OF PETITION TO MAKE SPECIAL UNDER THE GREEN TECHNOLOGY PILOT PROGRAM

Commissioner for Patents
U.S. Patent and Trademark Office
P.O. Box 1450
Alexandria, VA 22313-1450

Dear Sir:

In response to the Decision on Petition mailed May 17, 2011, Applicant respectfully requests reconsideration of the petition and Statement in support filed March 16, 2011 for the reasons stated herein.

In the decision dismissing the petition, it was stated that the petition lacked item #4. In particular, the Specialist stated that "petitioner's assertion of the reduction of fuel combustion transients and improve fuel economy for a hybrid vehicle appears to be speculative." First, Applicant respectfully disagrees with the Specialist's position, and notes that a Statement was filed with the original petition, with references to the specification and the claims where support and explanation are found.

Specifically, the Specialist states that "when a driver's power demand is sporadic such that the rate between acceleration and deceleration is large, no conservation of energy can be realized based on the claimed invention" and "when the electric battery is not at maximum level,

more fuel and engine torque would have to be provided to the generator to recharge the battery such that the system as a whole will not result in conservation of energy" and that "petitioner' s assertion of the reduction of fuel combustion transients and improve fuel economy for a hybrid vehicle appears to be speculative." Applicant respectfully disagrees with the Specialist's position, and notes that as a hybrid vehicle, power may be supplied by the engine and/or the electric motor and battery. Applicant notes that merely charging and discharging a battery that supplies electric power to a motor does not affect the efficiency of the engine; and the Specialist's statement inaccurately represents the relationship between the electric motor and battery, the engine, and the conservation of energy. For example, the battery may provide power to operate the electric motor to supplement the engine to meet vehicle demand and mitigate a fast transient of the engine. The engine may provide power to recharge the battery during a low vehicle demand while still operating efficiently. Therefore, as a threshold matter, Applicant submits that the Specialist's analysis is incorrect and is not properly relied upon for the basis of dismissing the petition.

Currently, as stated in the background of the application, a fast engine response in a hybrid vehicle causes a fast transient to meet a power or torque demand. However, this transient leads to a decreased fuel efficiency of the vehicle. In the present invention, the mitigation of these fast transients leads to an improved fuel economy for the hybrid vehicle.

In addition to the foregoing, Applicant notes that the Specialist's position is contrary to the guidelines for the Green Technology Pilot Program as set forth in the Federal Register. Specifically, the Specialist rejected the petition based on the presumption that a hybrid electric vehicle (HEV) does not qualify under the Green Technology Pilot Program, since every HEV uses an engine to at least charge the battery when the battery is depleted. This is contrary to the intent of the Program. In the initial publication of the Program in the Federal Register (74 Fed. Reg. 64,667 (2009)) it was required that the application be classified in one of the U.S. classifications listed in the Notice. One of the classifications listed was "Hybrid-powered vehicle" (subpart 11, under classification B, "Energy Conservation"). Subsequent to the publishing of this Notice, the Program was opened up to include more technologies than those that were originally provided in the classification list (75 Fed. Reg. 28,554 (2010)). Thus, under the original rules of the Program the instant application would have qualified on its face for the

granting of the requested petition. Under the new rules, which are even less restrictive, Applicant submits that there is no basis for rejecting the petition.

The Application is a non-reissue, non-provisional utility application filed under 35 U.S.C. §111(a). The Application contains no more than three (3) independent claims and twenty (20) total claims. The Application does not contain multiple dependent claims. A first Office action has not yet appeared in the Patent Application Information Retrieval System (PAIR).

Based on the foregoing, reconsideration of the petition and subsequent decision are requested.

Respectfully submitted,

Qing Wang et al.

By: /Tiffany A. Fidler/
Tiffany A. Fidler
Reg. No. 65,366
Attorney/Agent for Applicant

Date: 06/14/2011

BROOKS KUSHMAN P.C.
1000 Town Center, 22nd Floor
Southfield, MI 48075-1238
Phone: 248-358-4400
Fax: 248-358-3351

UNITED STATES PATENT AND TRADEMARK OFFICE

UNITED STATES DEPARTMENT OF COMMERCE
United States Patent and Trademark Office
Address: COMMISSIONER FOR PATENTS
P.O. Box 1450
Alexandria, Virginia 22313-1450
www.uspto.gov

APPLICATION NO.	FILING DATE	FIRST NAMED INVENTOR	ATTORNEY DOCKET NO.	CONFIRMATION NO.
12/915,456	10/29/2010	Qing Wang	83161243	7650

28395 7590 06/30/2011
BROOKS KUSHMAN P.C./FGTL
1000 TOWN CENTER
22ND FLOOR
SOUTHFIELD, MI 48075-1238

EXAMINER
TRAN, KHOI H

ART UNIT	PAPER NUMBER
3664	

MAIL DATE	DELIVERY MODE
06/30/2011	PAPER

Please find below and/or attached an Office communication concerning this application or proceeding.

The time period for reply, if any, is set in the attached communication.

UNITED STATES PATENT AND TRADEMARK OFFICE

Commissioner for Patents
United States Patent and Trademark Office
P.O. Box 1450
Alexandria, VA 22313-1450
www.uspto.gov

BROOKS KUSHMAN P.C./FGTL
1000 TOWN CENTER
22ND FLOOR
SOUTHFIELD MI 48075-1238

JUN 30 2011

In re Application of	:	
Wang et al.	:	DECISION ON PETITION
Application No. 12/915,456	:	TO MAKE SPECIAL UNDER
Filed: 10/29/2010	:	THE GREEN TECHNOLOGY
Attorney Docket No. **83161243**	:	PILOT PROGRAM

This is a decision on the request for reconsideration, filed 6/14/2011, to make the above-identified application special under the pilot program for applications pertaining to Green Technologies as set forth in 74 Federal Register Notice 64666 (December 8, 2009) and amended by 75 Federal Register Notice 28554 (May 21, 2010) and 75 Federal Register Notice 69049 (November 10, 2010).

The petition is **GRANTED**.

A grantable petition to make an application special under 37 CFR 1.102 and the pilot program as set forth in 74 FR 64666 must be directed to a nonprovisional application filed under 35 USC 111(a) or be a national stage entry under 35 USC 371, exclusive of any reissue applications.

In order to qualify for special status, the following requirements must be met. 1) The application must have no more than 3 independent claims and no more than 20 total claims. 2) The application must not contain any multiple dependent claims. 3) The petition must state the basis for seeking special status, i.e., the claimed invention either: A) materially enhances the quality of the environment or B) materially contributes to: i) the discovery or development of renewable energy resources, ii) the more efficient utilization and conservation of energy resources, or iii) greenhouse gas emission reduction. 4) If the disclosure is not clear on its face that the claimed invention materially contributes under category (A) or (B), the petition must be accompanied by a statement by the applicant, assignee, or an attorney/agent registered to practice before the Office explaining how the materiality standard is met. 5) A statement that applicant will agree to make an election without traverse in a telephonic interview if a restriction requirement is made by the examiner. 6) The petition to make special must be filed electronically. 7) The petition must be filed at least one day prior to the date that a first Office Action appears in the Patent Application Information Retrieval (PAIR) system. 8) The petition must be accompanied by a

request for early publication in compliance with 37 CFR 1.219 and include the publication fee as set forth in 37 CFR 1.18(d).

The requirement for a fee for consideration of the petition to make special for applications pertaining to Green Technologies has been waived.

The instant petition complies with items 1 – 8 above. Accordingly, the above-identified application has been accorded "special" status.

Telephone inquires concerning this decision should be directed to Tom Dunn at 571-272-1171.

The application is being forwarded to the Technology Center Art Unit 3664 for action on the merits commensurate with this decision.

/Tom Dunn/

Tom Dunn
Quality Assurance Specialist
Technology Center 1700

UNITED STATES PATENT AND TRADEMARK OFFICE

Commissioner for Patents
United States Patent and Trademark Office
P.O. Box 1450
Alexandria, VA 22313-1450
www.uspto.gov

In re Application of
Alice P. Taylor

Application No. 12915515

Filed: October 29,2010

Attorney Docket No. CMMI216US1

:
:
:DECISION ON PETITION TO MAKE SPECIAL
:UNDER 37 CFR 1.102(c)(1)
:

This is a decision on the electronic petition under 37 CFR 1.102 (c)(1), filed 04-FEB-2011 to make the above-identified application special based on applicant's age as set forth in MPEP § 708.02, Section IV.

The petition is **GRANTED**.

A grantable petition to make an application special under 37 CFR 1.102(c)(1), MPEP § 708.02, Section IV: Applicant's Age must include a statement by applicant or a registered practitioner having evidence that applicant is at least 65 years of age. No fee is required.

Accordingly, the above-identified application has been accorded "special" status and will be taken up for action by the examiner upon the completion of all pre-examination processing.

Telephone inquiries concerning this electronic decision should be directed to the Electronic Business Center at 866-217-9197.

All other inquiries concerning either the examination or status of the application should be directed to the Technology Center.

UNITED STATES PATENT AND TRADEMARK OFFICE

Commissioner for Patents
United States Patent and Trademark Office
P.O. Box 1450
Alexandria, VA 22313-1450
www.uspto.gov

In re Application of
Brice Letac

Application No. 12915538

Filed:

Attorney Docket No. PVI-5791CON6

:DECISION ON PETITION TO MAKE SPECIAL
:UNDER 37 CFR 1.102(c)(1)

This is a decision on the electronic petition under 37 CFR 1.102 (c)(1), filed 29-OCT-2010 to make the above-identified application special based on applicant's age as set forth in MPEP § 708.02, Section IV.

The petition is **GRANTED**.

A grantable petition to make an application special under 37 CFR 1.102(c)(1), MPEP § 708.02, Section IV: Applicant's Age must include a statement by applicant or a registered practitioner having evidence that applicant is at least 65 years of age. No fee is required.

Accordingly, the above-identified application has been accorded "special" status and will be taken up for action by the examiner upon the completion of all pre-examination processing.

Telephone inquiries concerning this electronic decision should be directed to the Electronic Business Center at 866-217-9197.

All other inquiries concerning either the examination or status of the application should be directed to the Technology Center.

PTO/SB/20PCT-US (09-10)
Approved for use through 01/31/2012. OMB 0651-0058
U.S. Patent and Trademark Office; U. S. DEPARTMENT OF COMMERCE
Under the Paperwork Reduction Act of 1995, no persons are required to respond to a collection of information unless it displays a valid OMB control number.

REQUEST FOR PARTICIPATION IN THE PATENT COOPERATION TREATY - PATENT PROSECUTION HIGHWAY (PCT-PPH) PILOT PROGRAM IN A U.S. APPLICATION WHERE THE USPTO WAS THE ISA OR IPEA

Application No:	12/915,646	Filing date:	October 29, 2010
First Named Inventor:	David Muller		
Title of the Invention:	System and Method for Stablizing Corneal Tissue After Treatment		

THIS REQUEST FOR PARTICIPATION IN THE PCT-PPH PILOT PROGRAM ALONG WITH THE REQUIRED DOCUMENTS MUST BE SUBMITTED VIA EFS-WEB. INFORMATION REGARDING EFS-WEB IS AVAILABLE AT HTTP://WWW.USPTO.GOV/EBC/EFS_HELP.HTML

APPLICANT HEREBY REQUESTS PARTICIPATION IN THE PCT-PPH PROGRAM AND PETITIONS TO MAKE THE ABOVE-IDENTIFIED APPLICATION SPECIAL UNDER THE PCT-PPH PROGRAM.

The above-identified application is (1) a national stage entry of the corresponding PCT application, or (2) a national stage entry of another PCT application which claims priority to the corresponding PCT application, or (3) a national application that claims domestic/ foreign priority to the corresponding PCT application, or (4) a national application which forms the basis for the priority claim in the corresponding PCT application, or (5) a continuing application of a U.S. application that satisfies one of (1) to (4) above, or (6) a U.S. application that claims domestic benefit to a U.S. provisional application which forms the basis for the priority claim in the corresponding PCT application.

The corresponding PCT application number(s) is/are: PCT/US2010/054673

The international date of the corresponding PCT application(s) is/are:
October 29, 2010

I. List of Required Documents:

a. **A copy of the latest international work product (WO/ISA, WO/IPEA, or IPER) in the above–identified corresponding PCT application(s)**

- [x] Is attached
- [ ] Is not attached because the document is already in the U.S. application.

b. **A copy of all claims which were indicated as having novelty, inventive step and industrial applicability in the above-identified corresponding PCT application(s).**

- [x] Is attached.
- [ ] Is not attached because the document is already in the U.S. application.

c. **English translations of the documents in a. and b. above are attached (if the documents are not in the English language). A statement that the English translation is accurate is attached for the document in b. above.**

This collection of information is required by 35 U.S.C. 119, 37 CFR 1.55, and 37 CFR 1.102(d). The information is required to obtain or retain a benefit by the public, which is to file (and by the USPTO to process) an application. Confidentiality is governed by 35 U.S.C. 122 and 37 CFR 1.11 and 1.14. This collection is estimated to take 2 hours to complete, including gathering, preparing, and submitting the completed application form to the USPTO. Time will vary depending upon the individual case. Any comments on the amount of time you require to complete this form and/or suggestions for reducing this burden should be sent to the Chief Information Officer, U.S. Patent and Trademark Office, U.S. Department of Commerce, P.O. Box 1450, Alexandria, VA 22313-1450. DO NOT SEND FEES OR COMPLETED FORMS TO THIS ADDRESS.

Under the Paperwork Reduction Act of 1995, no persons are required to respond to a collection of information unless it displays a valid OMB control number.

REQUEST FOR PARTICIPATION IN THE PCT-PPH PILOT PROGRAM IN A U.S. APPLICATION WHERE THE USPTO WAS THE ISA OR IPEA (continued)

Application No.:	12/915,646
First Named Inventor:	David Muller

d. **(1) An information disclosure statement listing the documents cited in the international work products (ISR, WO/ISA, WO/IPEA, IPER) of the corresponding PCT application.**

- [x] Is attached
- [ ] Has already been filed in the above-identified U.S. application on _____

(2) Copies of all documents (except) for U.S. patents or U.S. patent application publications)

- [x] Are attached.
- [ ] Have already been filed in the above-identified U.S. application on _____

II. Claims Correspondence Table:

Claims in US Application	Patentable Claims in the corresponding PCT Application	Explanation regarding the correspondence
16-17	16-17	Identical

III. All the claims in the US application sufficiently correspond to the patentable claims in the corresponding PCT application.

Signature /Jason S. Kray, Reg. No. 66,926/	Date 09/07/11
Name (Print/Typed) Jason S. Kray	Registration Number 66,926

Privacy Act Statement

The **Privacy Act of 1974 (P.L. 93-579)** requires that you be given certain information in connection with your submission of the attached form related to a patent application or patent. Accordingly, pursuant to the requirements of the Act, please be advised that: (1) the general authority for the collection of this information is 35 U.S.C. 2(b)(2); (2) furnishing of the information solicited is voluntary; and (3) the principal purpose for which the information is used by the U.S. Patent and Trademark Office is to process and/or examine your submission related to a patent application or patent. If you do not furnish the requested information, the U.S. Patent and Trademark Office may not be able to process and/or examine your submission, which may result in termination of proceedings or abandonment of the application or expiration of the patent.

The information provided by you in this form will be subject to the following routine uses:

1. The information on this form will be treated confidentially to the extent allowed under the Freedom of Information Act (5 U.S.C. 552) and the Privacy Act (5 U.S.C 552a). Records from this system of records may be disclosed to the Department of Justice to determine whether disclosure of these records is required by the Freedom of Information Act.
2. A record from this system of records may be disclosed, as a routine use, in the course of presenting evidence to a court, magistrate, or administrative tribunal, including disclosures to opposing counsel in the course of settlement negotiations.
3. A record in this system of records may be disclosed, as a routine use, to a Member of Congress submitting a request involving an individual, to whom the record pertains, when the individual has requested assistance from the Member with respect to the subject matter of the record.
4. A record in this system of records may be disclosed, as a routine use, to a contractor of the Agency having need for the information in order to perform a contract. Recipients of information shall be required to comply with the requirements of the Privacy Act of 1974, as amended, pursuant to 5 U.S.C. 552a(m).
5. A record related to an International Application filed under the Patent Cooperation Treaty in this system of records may be disclosed, as a routine use, to the International Bureau of the World Intellectual Property Organization, pursuant to the Patent Cooperation Treaty.
6. A record in this system of records may be disclosed, as a routine use, to another federal agency for purposes of National Security review (35 U.S.C. 181) and for review pursuant to the Atomic Energy Act (42 U.S.C. 218(c)).
7. A record from this system of records may be disclosed, as a routine use, to the Administrator, General Services, or his/her designee, during an inspection of records conducted by GSA as part of that agency's responsibility to recommend improvements in records management practices and programs, under authority of 44 U.S.C. 2904 and 2906. Such disclosure shall be made in accordance with the GSA regulations governing inspection of records for this purpose, and any other relevant (*i.e.*, GSA or Commerce) directive. Such disclosure shall not be used to make determinations about individuals.
8. A record from this system of records may be disclosed, as a routine use, to the public after either publication of the application pursuant to 35 U.S.C. 122(b) or issuance of a patent pursuant to 35 U.S.C. 151. Further, a record may be disclosed, subject to the limitations of 37 CFR 1.14, as a routine use, to the public if the record was filed in an application which became abandoned or in which the proceedings were terminated and which application is referenced by either a published application, an application open to public inspection or an issued patent.
9. A record from this system of records may be disclosed, as a routine use, to a Federal, State, or local law enforcement agency, if the USPTO becomes aware of a violation or potential violation of law or regulation.

REQUIRED DOCUMENT I(A)

The following document(s) include(s) a copy of the latest international work product in the corresponding PCT application

PATENT COOPERATION TREATY

From the
INTERNATIONAL SEARCHING AUTHORITY

To:
YAO JOEY

NIXON PEABODY LLP 300 S. RIVERSIDE DRIVE, 16TH FLOOR CHICAGO IL 60606 USA

PCT

WRITTEN OPINION OF THE INTERNATIONAL SEARCHING AUTHORITY

(PCT Rule 43bis.1)

Date of mailing *(day/month/year)* **02 AUGUST 2011 (02.08.2011)**

Applicant's or agent's file reference
045439-059WO

FOR FURTHER ACTION
See paragraph 2 below

International application No.	International filing date *(day/month/year)*	Priority date *(day/month/year)*
PCT/US2010/054673	**29 OCTOBER 2010 (29.10.2010)**	30 OCTOBER 2009 (30.10.2009)

International Patent Classification (IPC) or both national classification and IPC

A61N 5/02(2006.01)i, A61F 9/007(2006.01)i, A61M 35/00(2006.01)i, A61F 7/00(2006.01)i, A61K 38/20(2006.01)i, A61K 38/18(2006.01)i, A61P 27/02(2006.01)i

Applicant

AVEDRO, INC. et al

1. This opinion contains indications relating to the following items:

- [x] Box No. I Basis of the opinion
- [ ] Box No. II Priority
- [x] Box No. III Non-establishment of opinion with regard to novelty, inventive step and industrial applicability
- [ ] Box No. IV Lack of unity of invention
- [x] Box No. V Reasoned statement under Rule 43bis.1(a)(i) with regard to novelty, inventive step or industrial applicability; citations and explanations supporting such statement
- [ ] Box No. VI Certain documents cited
- [ ] Box No. VII Certain defects in the international application
- [ ] Box No. VIII Certain observations on the international application

2. **FURTHER ACTION**
If a demand for international preliminary examination is made, this opinion will be considered to be a written opinion of the International Preliminary Examining Authority ("IPEA") except that this does not apply where the applicant chooses an Authority other than this one to be the IPEA and the chosen IPEA has notified the International Bureau under Rule 66.1bis(b) that written opinions of this International Searching Authority will not be so considered.

If this opinion is, as provided above, considered to be a written opinion of the IPEA, the applicant is invited to submit to the IPEA a written reply together, where appropriate, with amendments, before the expiration of 3 months from the date of mailing of Form PCT/ISA/220 or before the expiration of 22 months from the priority date, whichever expires later.
For further options, see Form PCT/ISA/220.

3. For further details, see notes to Form PCT/ISA/220.

Name and mailing address of the ISA/KR	Date of completion of this opinion	Authorized officer
Korean Intellectual Property Office Government Complex-Daejeon, 189 Cheongsa-ro, Seo-gu, Daejeon 302-701, Republic of Korea Facsimile No. 82-42-472-7140	29 JULY 2011 (29.07.2011)	NHO, Ji Myong Telephone No.82-42-481-8528

WRITTEN OPINION OF THE INTERNATIONAL SEARCHING AUTHORITY

International application No.

PCT/US2010/054673

Box No. I Basis of this opinion

1. With regard to the **language**, this opinion has been established on the basis of :

   ☒ the international application in the language in which it was filed

   ☐ a translation of the international application into _____ , which is the language of a translation furnished for the purposes of international search (Rules 12.3(a) and 23.1(b))

2. ☐ This opinion has been established taking into account the **rectification of an obvious mistake** authorized by or notified to this Authority under Rule 91 (Rule 43*bis*.1(a))

3. With regard to any **nucleotide and/or amino acid sequence** disclosed in the international application, this opinion has been established on the basis of:

   a. a sequence listing filed or furnished

   ☐ on paper

   ☐ in electronic form

   b. time of filing or furnishing

   ☐ contained in the international application as filed.

   ☐ filed together with the international application in electronic form.

   ☐ furnished subsequently to this Authority for the purposes of search.

4. ☐ In addition, in the case that more than one version or copy of a sequence listing has been filed or furnished, the required statements that the information in the subsequent or additioanl copies is identical to that in the application as filed or does not go beyond the application as filed, as appropriate, were furnished.

5. Additional comments:

WRITTEN OPINION OF THE INTERNATIONAL SEARCHING AUTHORITY

International application No.
PCT/US2010/054673

Box No. III Non-establishment of opinion with regard to novelty, inventive step and industrial applicability

The questions whether the claimed invention appears to be novel, to involve an inventive step (to be non obvious), or to be industrially applicable have not been examined in respect of:

☐ the entire international application

☒ claims Nos. 1-9

because:

☒ the said international application, or the said claims Nos. 1-9 relate to the following subject matter which does not require an international search *(specify)*:

The subject-matter of claims 1-9 relate to a method of treatment by therapy (Rules 43 bis.1(b), Rule 67.1 (iv)).

☐ the description, claims or drawings *(indicate particular elements below)* or said claims Nos. _____ are so unclear that no meaningful opinion could be formed *(specify)*:

☐ the claims, or said claims Nos. _____ are so inadequately supported by the description that no meaningful opinion could be formed *(specify)*:

☒ no international search report has been established for said claims Nos. 1-9

☐ a meaningful opinion could not be formed without the sequence listing; the applicant did not, within the prescribed time limit:

- ☐ furnish a sequence listing on paper complying with the standard provided for in Annex C of the Administrative Istructions, and such listing was not available to the International Searching Authority in a form and manner acceptable to it.
- ☐ furnish a sequence listing in electronic form complying with the standard provided for in Annex C of the Administrative Istructions, and such listing was not available to the International Searching Authority in a form and manner acceptable to it.
- ☐ pay the required late furnishing fee for the furnishing of a sequence listing in response to an invitation under Rule 13ter.1(a) or (b).

☐ See Supplemental Box for further details.

WRITTEN OPINION OF THE INTERNATIONAL SEARCHING AUTHORITY

International application No.
PCT/US2010/054673

Box No. V Reasoned statement under Rule 43bis.1(a)(i) with regard to novelty, inventive step or industrial applicability; citations and explanations supporting such statement

1. Statement

Novelty (N)	Claims	10-18	YES
	Claims	NONE	NO
Inventive step (IS)	Claims	16-17	YES
	Claims	10-15,18	NO
Industrial applicability (IA)	Claims	10-18	YES
	Claims	NONE	NO

2. Citations and explanations :

Reference is made to the following documents:

D1: US 2009-0149842 A1 (MULLER et al.) 11 June 2009
D2: CORBETT et al. Effect of Collagenase Inhibitors on Corneal Haze after PRK. Exp. Eye Res. 29 January 2001, Vol. 72, Issue 3, pages 253-259.
D3: US 2004-0001821 A1 (SILVER et al.) 01 January 2004
D4: US 2009-0209954 A1 (MULLER et al.) 20 August 2009

2.1. Novelty and Inventive Step

2.1.1. Independent Claim 10

D1, which is considered to be the closest prior art to the subject matter of **claim 10**, discloses a system for applying therapy to an eye, the system comprising: an electrical energy source; an electrical energy conducting element in contact with the electrical energy source ('***an electrical energy conducting element*** *111 that is operably connected to* ***an electrical energy source*** *120*' in paragraph [0026]), the electrical energy conducting element having a proximal end configured to receive electrical energy generated by the electrical energy source, and a distal end configured to apply electrical energy ('*the energy conducting element 111 receives, at the proximal end 110A, the electrical energy generated by the electrical energy source 120, and directs microwave energy to the distal end 111B*' in paragraph [0028]); a wound healing inhibitor configured to reduce the effect of the treatment with the electrical energy source ('*if the collagen fibrils continue to change after the desired reshaping …. … provide approaches* ***for preserving the desired corneal structure and reshaping that result from the application of heat****. … provide approaches for* ***initiating molecular cross-linking***' in paragraph [0036]; '*the changed corneal tissue is treated with* ***a cross-linking agent*** *322*' in paragraph [0037]); and a wound healing inhibitor delivery element in contact with the wound healing inhibitor('***The delivery device*** *… delivers the cross-linking agent … to corneal fibrils*' in paragraph [0010]). Claim 10 differs from D1 in that the inhibitor of claim 10 is a means for reducing at least one of corneal haze and central islands of an eye. However, D2 discloses matrix metalloproteinases (MMPs) inhibitors used after photorefractive keratectomy with the aim of reducing the unnecessary removal phase of healing and thereby limiting the subsequent unwanted repair and replacement phases which are responsible for haze and regression (See the left column of page 254). Accordingly, claim 10 would be obvious over D1 in view of D2. Therefore, claim 10 is considered to be novel under PCT Article 33(2) but lacks an inventive step under PCT Article 33(3).

2.1.2. Dependent Claims 11-18

2.1.2.1. Concerning Claims 11-15 and 18
The additional feature of **claim 11** dependent on claim 10 is merely a variation of the cooling system of the cited document D1 and a person skilled in the art would arrive at the claimed invention by general

----- Continued on Supplemental Box -----

Supplemental Box

In case **the space in any of the preceding boxes is not sufficient.**
Continuation of:

Box V

experimentation alone without exercising any ingenuity (See paragraph [0033]).

The additional feature of **claim 12** dependent on claim 11 is identical to microwave energy generated by the electrical energy source in D1 (See paragraph [0026]).

The additional features of **claims 13 and 14** dependent on claims 11 and 13 respectively are merely variations of the ophthalmic solution or the ophthalmic ointment as the types of cross-linking agent in D1 (See claim 13) and a person skilled in the art would arrive at the claimed invention by general experimentation alone without exercising any ingenuity.

The additional feature of **claim 15** dependent on claim 14 respectively is merely a variation of the inhibitors of MMPs inhibitors such as transforming growth factor-β and interleukin-1 receptor antagonist in D2 (See the right column of page 256) and a person skilled in the art would arrive at the claimed invention by general experimentation alone without exercising any ingenuity.

The additional feature of **claim 18** dependent on claim 11 is merely a variation of a delivery device delivering the cross-linking agent in an ophthalmic solution or an ophthalmic ointment in D1 and a person skilled in the art would arrive at the claimed invention by general experimentation alone without exercising any ingenuity (paragraph [0010] and claim 13).

Therefore, claims 11-15 and 18 are considered to be novel under PCT Article 33(2) but lack an inventive step under PCT Article 33(3).

2.1.2.2. Concerning Claims 16-17

The additional features of **claims 16 and 17** dependent on claims 15 and 16 respectively are not disclosed in any of the prior art documents, nor are they obvious to a person skilled in the art by the documents. Accordingly, claims 16-17 are considered to be novel and to involve an inventive step under PCT Article 33(2) and (3).

2.2. Industrial Applicability

Claims 10-18 are industrially applicable under PCT Article 33(4).

REQUIRED DOCUMENT I(B)

The following document(s) include(s) a copy of all claims which were indicated as having novelty, inventive step and industrial applicability in the corresponding PCT application

WHAT IS CLAIMED IS:

1. A method for applying therapy to an eye, the method comprising:

positioning an electrical energy conducting element in contact with a surface of an eye;

applying electrical energy to an area of the eye with the electrical energy conducting element, the electrical energy reshaping the area of the eye to a new shape, the new shape being determined by a pattern of energy application; and

applying a wound healing inhibitor to the surface of the eye, the wound healing inhibitor reducing at least one of corneal haze and central islands of the eye.

2. The method according to claim 1, further comprising:

applying a coolant to the surface of the eye, the coolant minimizing damage to the eye.

3. The method according to claim 1, wherein the electrical energy is microwave energy.

4. The method according to claim 1, wherein the wound healing inhibitor is an ophthalmic formulation.

5. The method according to claim 4, wherein the ophthalmic formulation is a drug.

6. The method according to claim 5, wherein the drug is at least one of Interleukin 10 (IL-10), Transforming Growth Factor beta 3 (TGFb3), and Mannose 6-phosphate (M6P).

7. The method according to claim 6, wherein the drug is Mannose 6-phosphate (M6P), and the corneal haze is reduced by competing with latent Transforming Growth Factor beta (TGFb) at an Insulin Like Growth Factor II receptor.

8. The method according to claim 7, the method further comprising:

determining Transforming Growth Factor beta (TGFb) activity; and

controlling wound healing with the Mannose 6-phosphate (M6P) based on the TGFb activity.

9. The method according to claim 1, wherein the wound healing inhibitor is applied to the surface of the eye with at least one of an eye dropper and a drug application device removably attached to the eye.

10. A system for applying therapy to an eye, the system comprising:

an electrical energy source;

an electrical energy conducting element in contact with the electrical energy source, the electrical energy conducting element having a proximal end configured to receive

electrical energy generated by the electrical energy source, and a distal end configured to apply electrical energy;

a wound healing inhibitor configured to reduce at least one of corneal haze and central islands of an eye; and

a wound healing inhibitor delivery element in contact with the wound healing inhibitor.

11. The system according to claim 10, wherein the system further comprises:

a coolant supply; and

a coolant delivery element in contact with the coolant supply, the coolant delivery element configured to deliver a pulse of coolant;

12. The system according to claim 11, wherein the electrical energy is microwave energy.

13. The system according to claim 11, wherein the wound healing inhibitor is an ophthalmic formulation.

14. The system according to claim 13, wherein the ophthalmic formulation is a drug.

15. The system according to claim 14, wherein the drug is at least one of Interleukin 10 (IL-10), Transforming Growth Factor beta 3 (TGFb3), and Mannose 6-phosphate (M6P).

16. The system according to claim 15, wherein the drug is Mannose 6-phosphate (M6P) that is configured to reduce the corneal haze by competing with latent Transforming Growth Factor beta (TGFb) at an Insulin Like Growth Factor II receptor.

17. The system according to claim 16, the system further comprising:

a processor configured to determine Transforming Growth Factor beta (TGFb) activity,

wherein the wound inhibitor delivery element is adjusted based on the Transforming Growth Factor beta (TGFb) activity.

18. The system according to claim 11, wherein the wound healing inhibitor delivery element is at least one of an eye dropper and a drug application device configured to be removably attached to the eye.

UNITED STATES PATENT AND TRADEMARK OFFICE

UNITED STATES DEPARTMENT OF COMMERCE
United States Patent and Trademark Office
Address: COMMISSIONER FOR PATENTS
P.O. Box 1450
Alexandria, Virginia 22313-1450
www.uspto.gov

APPLICATION NO.	FILING DATE	FIRST NAMED INVENTOR	ATTORNEY DOCKET NO.	CONFIRMATION NO.
12/915,646	10/29/2010	David Muller	045439-000059USPT	8028

70001 7590 09/18/2011
NIXON PEABODY, LLP
300 S. Riverside Plaza, 16th Floor
CHICAGO, IL 60606-6613

EXAMINER
DVORAK, LINDA C

ART UNIT	PAPER NUMBER
3739	

MAIL DATE	DELIVERY MODE
09/18/2011	PAPER

Please find below and/or attached an Office communication concerning this application or proceeding.

The time period for reply, if any, is set in the attached communication.

UNITED STATES PATENT AND TRADEMARK OFFICE

Commissioner for Patents
United States Patent and Trademark Office
P.O. Box 1450
Alexandria, VA 22313-1450
www.uspto.gov

NIXON PEABODY, LLP
300 S. Riverside Plaza, 16th Floor
CHICAGO IL 60606-6613

In re Application of	:
MULLER, DAVID , et al.	: DECISION ON REQUEST TO
Application No. 12/915,646	: PARTICIPATE IN PATENT
Filed: October 29, 2010	: PCT/PROSECUTION HIGHWAY
Attorney Docket No. 045439-000059USPT	: PROGRAM AND PETITION
For: SYSTEM AND METHOD FOR	: TO MAKE SPECIAL UNDER
STABILIZING CORNEAL TISSUE	: 37 CFR 1.102(a)
AFTER TREATEMENT	

This is a decision on the request to participate in the Patent Prosecution Highway (PPH) program and the petition under 37 CFR 1.102(a), filed September 07, 2011 to make the above-identified application special.

The request and petition are granted.

A grantable request to participate in the PPH pilot program and petition to make special require:

(1) The U.S. application must validly claim priority under 35 U.S.C. 119(a) to one or more applications filed in the JPO;
(2) Applicant must submit a copy of the allowable/patentable claim(s) from the JPO/PCT application(s) along with an English translation thereof and a statement that the English translation is accurate;
(3) All the claims in the U.S. application must sufficiently correspond or be amended to sufficiently correspond to the allowable/patentable claim(s) in the JPO application(s);
(4) Examination of the U.S. application has not begun;
(5) Applicant must submit a copy of all the office actions from each of the JPO/PCT application(s) containing the allowable/patentable claim(s) along with an English translation thereof and a statement that the English translation is accurate; and
(6) Applicant must submit an IDS listing the documents cited by the JPO examiner in the JPO office action along with copies of documents except U.S. patents or U.S. patent application publications.
In light of the petition being properly submitted, the request to participate in the PPH program and the petition comply with the above requirements. Accordingly, the above-identified application has been accorded "special" status.

The applicant is encouraged to cite and submit all relevant prior art references, if any, to facilitate examination in this application. Upon completion of pre-examination processing, this application will be forwarded to an examiner for examination.

Telephone inquiries concerning this decision should be directed to Henry C. Yuen at 571-272-4485. All other inquiries concerning the examination or status of the application should be directed to Linda Dvorak, SPE of Art Unit 3739, and 571-272-4764 for Class 606 and also accessible in the PAIR system at http://www.uspto.gov/ebc.index.html.

Petition is **granted**.

/Henry C. Yuen/

Henry C. Yuen, Special Programs Examiner
Technology Center 3700 – Mechanical Engineering,
Manufacturing and Products
571-272-4856

IN THE UNITED STATES PATENT AND TRADEMARK OFFICE

First Named Inventor: Scott Gabell RIDDELL	)
Confirmation No.: 8106	)
	)
Serial No.: 12/915,686	)
	)
Filing Date: October 29, 2010	)
	)
Atty Docket No.: 246809-1	)

Commissioner for Patents
P.O. Box 1450
Alexandria, VA 22313-1450

Statement Concerning the Basis for the Special Status

SIR:

Applicant respectfully submits that Special Status is sought on the basis that the present invention materially contributes to the development of renewable energy resources or energy conservation.

The undersigned attorney may be contacted at the number below to facilitate the resolution of any matters. Please charge any fees that are incurred in connection with this Statement to deposit account no. 09-0470.

Respectfully submitted,

General Electric Company

By : /Douglas D. Zhang/
Douglas D. Zhang
Reg. No. 37,985

Dated: December 31, 2010

GE Global Patent Operation
2 Corporate Drive, Suite 648
Shelton, CT 06484
203-944-6755

Doc Code: PET.GREEN
Document Description: Petition for Green Tech Pilot

PTO/SB/420 (11-10)
Approved for use through 01/31/2011. OMB 0651-0062
U.S. Patent and Trademark Office; U. S. DEPARTMENT OF COMMERCE
Under the Paperwork Reduction Act of 1995, no persons are required to respond to a collection of information unless it displays a valid OMB control number.

PETITION TO MAKE SPECIAL UNDER THE GREEN TECHNOLOGY PILOT PROGRAM

Attorney Docket Number: 246809-1	Application Number (if known): 12/915,686	Filing date: October 29, 2010
First Named Inventor: Scott Gabell RIDDELL		
Title: JOINT DESIGN FOR ROTOR BLADE SEGMENTS OF A WIND TURBINE		

APPLICANT HEREBY REQUESTS TO PARTICIPATE IN THE GREEN TECHNOLOGY PILOT PROGRAM FOR THE ABOVE-IDENTIFIED APPLICATION. See Instruction Sheet on page 2.

This petition must be timely filed electronically using the USPTO electronic filing system, EFS-Web.

1. By filing this petition:

   Applicant is requesting early publication: Applicant hereby requests early publication under 37 CFR 1.219 and the publication fee set forth in 37 CFR 1.18(d) accompanies this request.

2. By filing this petition: applicant is agreeing to make an election without traverse in a telephonic interview and elect an invention that meets the eligibility requirements for the Green Technology Pilot Program, if the Office determines that the claims are not obviously directed to a single invention. See Instruction Sheet.

3. This request is accompanied by statements of special status for the eligibility requirement.

4. The application contains no more than three (3) independent claims and twenty (20) total claims.

5. The application does not contain any multiple dependent claims.

6. Other attachments: Statement Concerning the Basis for the Special Status

Signature /Douglas D. Zhang/	Date December 31, 2010
Name (Print/Typed) Douglas D. Zhang	Registration Number 37,985

Note: *Signatures of all the inventors or assignees of record of the entire interest or their representative(s) are required in accordance with 37 CFR 1.33 and 11.18. Please see 37 CFR 1.4(d) for the form of the signature. If necessary, submit multiple forms for more than one signature see below*.*

☐ *Total of ..... forms are submitted.

The information is required to obtain or retain a benefit by the public which is to file (and by the USPTO to process) an application. Confidentiality is governed by 35 U.S.C. 122 and 37 CFR 1.11 and 1.14. This collection is estimated to take 12 hours to complete, including gathering, preparing, and submitting the completed application form to the USPTO. Time will vary depending upon the individual case. Any comments on the amount of time you require to complete this form and/or suggestions for reducing this burden, should be sent to the Chief Information Officer, U.S. Patent and Trademark Office, U.S. Department of Commerce, P.O. Box 1450, Alexandria, VA 22313-1450. DO NOT SEND FEES OR COMPLETED FORMS TO THIS ADDRESS. **SEND TO: Commissioner for Patents, P.O. Box 1450, Alexandria, VA 22313-1450.**

If you need assistance in completing the form, call 1-800-PTO-9199 and select option 2.

Privacy Act Statement

The **Privacy Act of 1974 (P.L. 93-579)** requires that you be given certain information in connection with your submission of the attached form related to a patent application or patent. Accordingly, pursuant to the requirements of the Act, please be advised that: (1) the general authority for the collection of this information is 35 U.S.C. 2(b)(2); (2) furnishing of the information solicited is voluntary; and (3) the principal purpose for which the information is used by the U.S. Patent and Trademark Office is to process and/or examine your submission related to a patent application or patent. If you do not furnish the requested information, the U.S. Patent and Trademark Office may not be able to process and/or examine your submission, which may result in termination of proceedings or abandonment of the application or expiration of the patent.

The information provided by you in this form will be subject to the following routine uses:

1. The information on this form will be treated confidentially to the extent allowed under the Freedom of Information Act (5 U.S.C. 552) and the Privacy Act (5 U.S.C 552a). Records from this system of records may be disclosed to the Department of Justice to determine whether disclosure of these records is required by the Freedom of Information Act.
2. A record from this system of records may be disclosed, as a routine use, in the course of presenting evidence to a court, magistrate, or administrative tribunal, including disclosures to opposing counsel in the course of settlement negotiations.
3. A record in this system of records may be disclosed, as a routine use, to a Member of Congress submitting a request involving an individual, to whom the record pertains, when the individual has requested assistance from the Member with respect to the subject matter of the record.
4. A record in this system of records may be disclosed, as a routine use, to a contractor of the Agency having need for the information in order to perform a contract. Recipients of information shall be required to comply with the requirements of the Privacy Act of 1974, as amended, pursuant to 5 U.S.C. 552a(m).
5. A record related to an International Application filed under the Patent Cooperation Treaty in this system of records may be disclosed, as a routine use, to the International Bureau of the World Intellectual Property Organization, pursuant to the Patent Cooperation Treaty.
6. A record in this system of records may be disclosed, as a routine use, to another federal agency for purposes of National Security review (35 U.S.C. 181) and for review pursuant to the Atomic Energy Act (42 U.S.C. 218(c)).
7. A record from this system of records may be disclosed, as a routine use, to the Administrator, General Services, or his/her designee, during an inspection of records conducted by GSA as part of that agency's responsibility to recommend improvements in records management practices and programs, under authority of 44 U.S.C. 2904 and 2906. Such disclosure shall be made in accordance with the GSA regulations governing inspection of records for this purpose, and any other relevant (*i.e.*, GSA or Commerce) directive. Such disclosure shall not be used to make determinations about individuals.
8. A record from this system of records may be disclosed, as a routine use, to the public after either publication of the application pursuant to 35 U.S.C. 122(b) or issuance of a patent pursuant to 35 U.S.C. 151. Further, a record may be disclosed, subject to the limitations of 37 CFR 1.14, as a routine use, to the public if the record was filed in an application which became abandoned or in which the proceedings were terminated and which application is referenced by either a published application, an application open to public inspection or an issued patent.
9. A record from this system of records may be disclosed, as a routine use, to a Federal, State, or local law enforcement agency, if the USPTO becomes aware of a violation or potential violation of law or regulation.

UNITED STATES PATENT AND TRADEMARK OFFICE

UNITED STATES DEPARTMENT OF COMMERCE
United States Patent and Trademark Office
Address: COMMISSIONER FOR PATENTS
P.O. Box 1450
Alexandria, Virginia 22313-1450
www.uspto.gov

APPLICATION NO.	FILING DATE	FIRST NAMED INVENTOR	ATTORNEY DOCKET NO.	CONFIRMATION NO.
12/915,686	10/29/2010	Scott Gabell Riddell	246809/GEC-180	8106

87853 7590 01/05/2011
Dority & Manning, PA and General Electric Company
Post Office Box 1449
Greenville, SC 29602

EXAMINER
NGUYEN, NINH H

ART UNIT	PAPER NUMBER
3745	

MAIL DATE	DELIVERY MODE
01/05/2011	PAPER

Please find below and/or attached an Office communication concerning this application or proceeding.

The time period for reply, if any, is set in the attached communication.

UNITED STATES PATENT AND TRADEMARK OFFICE

Commissioner for Patents
United States Patent and Trademark Office
P.O. Box 1450
Alexandria, VA 22313-1450
www.uspto.gov

Dority & Manning, PA and General Electric Company
Post Office Box 1449
Greenville SC 29602

In re Application of	:	
RIDDELL, SCOTT GABELL et al	:	DECISION ON PETITION
Application No. 12/915,686	:	TO MAKE SPECIAL UNDER
Filed: Oct. 29, 2010	:	THE GREEN TECHNOLOGY
Attorney Docket No. 246809/GEC/180	:	PILOT PROGRAM

This is a decision on the petition under 37 CFR 1.102, filed Dec. 31, 2010, to make the above-identified application special under the pilot program for applications pertaining to Green Technologies as set forth in 74 Federal Register Notice 64666 (December 8, 2009) and amended by 75 Federal Register Notice 28554 (May 21, 2010) and 75 Federal Register Notice 69049 (November 10, 2010).

The petition is Granted.

If reconsideration of this decision is desired, a petition for reconsideration must be filed within ONE (1) MONTH OR THIRTY (30) DAYS from the mail date of this decision, whichever is longer. No extension of this time limit can be granted under 37 CFR 1.136(a) or (b). The petition for reconsideration should include an exhaustive attempt to provide the lacking item(s) noted below, since, after a decision on the petition for reconsideration, no further reconsideration or review of the matter will be undertaken by the Director.

A grantable petition to make an application special under 37 CFR 1.102 and the pilot program as set forth in 74 FR 64666 must be directed to a nonprovisional application filed under 35 USC 111(a) or be a national stage entry under 35 USC 371, exclusive of any reissue applications.

In order to qualify for special status, the following requirements must be met. 1) The application must have no more than 3 independent claims and no more than 20 total claims. 2) The application must not contain any multiple dependent claims. 3) The petition must state the basis

for seeking special status, i.e., the claimed invention either: A) materially enhances the quality of the environment or B) materially contributes to: i) the discovery or development of renewable energy resources, ii) the more efficient utilization and conservation of energy resources, or iii) greenhouse gas emission reduction. 4) If the disclosure is not clear on its face that the claimed invention materially contributes under category (A) or (B), the petition must be accompanied by a statement by the applicant, assignee, or an attorney/agent registered to practice before the Office explaining how the materiality standard is met. 5) A statement that applicant will agree to make an election without traverse in a telephonic interview if a restriction requirement is made by the examiner. 6) The petition to make special must be filed electronically. 7) The petition must be filed at least one day prior to the date that a first Office Action appears in the Patent Application Information Retrieval (PAIR) system. 8) The petition must be accompanied by a request for early publication in compliance with 37 CFR 1.219 and include the publication fee as set forth in 37 CFR 1.18(d).

The requirement for a fee for consideration of the petition to make special for applications pertaining to Green Technologies has been waived.

The instant petition complies with items 1 – 8 above. Accordingly, the above-identified application has been accorded "special" status.

Telephone inquires concerning this decision should be directed to Henry C. Yuen at 571-272-4856.

This application will be forwarded to the Technology Center Art Unit 3745 for action on the merits commensurate with this decision.

/Henry C. Yuen/

Henry C. Yuen
Quality Assurance Specialist
Technology Center TC 3700

UNITED STATES PATENT AND TRADEMARK OFFICE

COMMISSIONER FOR PATENTS
UNITED STATES PATENT AND TRADEMARK OFFICE
P.O. BOX 1450
ALEXANDRIA, VA 22313-1450
www.uspto.gov

MAILED
JUN 20 2011
OFFICE OF PETITIONS

OCCHIUTI ROHLICEK & TSAO, LLP
10 FAWCETT STREET
CAMBRIDGE MA 02138

In re Application of
Cohen, et al.
Application No. 12/915,689
Filed: October 29, 2010
Atty. Dkt. No.: 55611-003001

: DECISION REFUSING STATUS
: UNDER 37 CFR 1.47(a)

This decision is in response to the petition under 37 CFR 1.47(a) filed June 9, 2011.

The petition under 37 CFR 1.47(a) is **DISMISSED**.

Petitioners are given TWO MONTHS from the mailing date of this decision to reply, correcting the below-noted deficiencies. Any reply should be entitled "Request for Reconsideration of Petition Under 37 CFR 1.47(a)," and should only address the deficiencies noted herein. The reply under 37 CFR 1.47(a) may include an oath or declaration executed by the non-signing inventors. Any extensions of time will be governed by 37 CFR 1.136(a).

The above-identified application was filed October 29, 2010 without an executed oath or declaration. Accordingly, a Notice to File Missing Parts of Nonprovisional Application (Notice) was mailed November 15, 2010. The Notice required a surcharge and an executed oath or declaration.

A grantable petition under 37 CFR 1.47(a) requires: (1) proof that the non-signing inventor cannot be reached or refuses to sign the oath or declaration after having been presented with the application papers (specification, claims and drawings); (2) an acceptable oath or declaration in compliance with 35 U.S.C. §§ 115 and 116; (3) the petition fee; and (4) a statement of the last known address of the non-signing inventor.

The instant petition fails to satisfy requirement (1) set forth above. Petitioners assert that the non-signing inventor cannot be located for presentation of the application papers. The petition and accompanying documents assert that the non-signing inventor cannot be reached at his last known address. An investigative report (and English language transcript) accompanies the petition and asserts searches of the white pages and yellow pages, presumably telephone directories, were made and that no information regarding the non-signing inventor was discovered.

The investigative report fails to provide documentary evidence of the efforts to locate the non-signing inventor.

Where inability to reach or locate a non-signing inventor is alleged, petitioners are required to establish that diligent effort was made to locate the non-signing inventor and provide the non-signing inventor with a complete copy of the patent application (specification, including claims,

drawings, and oath or declaration). Petitioners have not established that diligent effort has been made to locate the non-signing inventor for presentation of the application papers.

Any renewed petition must be supported by evidence that sufficiently establishes that despite diligent effort, the non-signing inventor cannot be located. A statement of facts should be submitted that fully describes the exact facts that are relied on to establish that a *diligent effort* was made to locate the non-signing inventor. The statement of facts must be signed, where at all possible, by a person having *firsthand knowledge* of the facts recited therein. Statements based on hearsay, will not normally be accepted. At the very least, a search of the internet and human resource records, etc. should be undertaken. *Petitioner should reference and supply evidence of any such searches in a renewed petition.* See, MPEP 409.03(d).

As to item (3), the required petition fee has been charged to the authorized deposit account.

As to item (4), the last known address of the non-signing inventor has been provided. However, should further research reveal a more current address for the non-signing inventor, such information should be provided by way of renewed petition.

An application filed pursuant to 37 CFR 1.47 must state the last known address of the non-signing inventor. That address should be the last known address at which the inventor customarily receives mail. Ordinarily, the last known address will be the last known residence of the non-signing inventor. Inasmuch as a non-signing inventor is notified that an application pursuant to 37 CFR 1.47 has been filed on his or her behalf, other addresses at which the non-signing inventor may be reached should also be given. Each applicant's mailing or post office address is required to be supplied on the oath or declaration, if not stated in an application data sheet. Applicant's mailing address means that address at which he or she customarily receives his or her mail. Either applicant's home or business address is acceptable as the mailing address. The mailing address should include the ZIP Code designation. The object of requiring each applicant's mailing address is to enable the Office to communicate directly with the applicant if desired; hence, the address of the attorney with instruction to send communications to applicant in care of the attorney is not sufficient. In situations where an inventor does not execute the oath or declaration and the inventor is not deceased, such as in an application filed under 37 CFR 1.47, the inventor's most recent home address must be given to enable the Office to communicate directly with the inventor as necessary. See, MPEP §§ 409.03(e) and 605.03.

Further correspondence with respect to this matter should be addressed as follows:

By mail:	Mail Stop Petition Commissioner for Patents P.O. Box 1450 Alexandria, VA 22313-1450
By facsimile:	(571) 273-8300
By hand:	U.S. Patent and Trademark Office Customer Service Window Mail Stop Petition Randolph Building 401 Dulany Street

Alexandria, VA 22314

Telephone inquiries related to this decision may be directed to the undersigned at (571) 272-3205.

/ALESIA M. BROWN/

Alesia M. Brown
Attorney Advisor
Office of Petitions

UNITED STATES PATENT AND TRADEMARK OFFICE

Commissioner for Patents
United States Patent and Trademark Office
P.O. Box 1450
Alexandria, VA 22313-1450
www.uspto.gov

MAILED
SEP 13 2011
OFFICE OF PETITIONS

OCCHIUTI ROHLICEK & TSAO, LLP
10 FAWCETT STREET
CAMBRIDGE MA 02138

In re Application of
Cohen, et al.
Application No. 12/915,689
Filed: October 29, 2010
Atty. Dkt. No.: 55611-003001

: DECISION REFUSING STATUS
: UNDER 37 CFR 1.47(a)

This decision is in response to the renewed petition under 37 CFR 1.47(a) filed August 19, 2011.

The petition under 37 CFR 1.47(a) is **DISMISSED**.

Petitioners are given TWO MONTHS from the mailing date of this decision to reply, correcting the below-noted deficiencies. Any reply should be entitled "Request for Reconsideration of Petition Under 37 CFR 1.47(a)," and should only address the deficiencies noted herein. The reply under 37 CFR 1.47(a) may include an oath or declaration executed by the non-signing inventors. Any extensions of time will be governed by 37 CFR 1.136(a).

The above-identified application was filed October 29, 2010 without an executed oath or declaration. Accordingly, a Notice to File Missing Parts of Nonprovisional Application (Notice) was mailed November 15, 2010. The Notice required a surcharge and an executed oath or declaration. A petition under 37 CFR 1.47(a) was June 9, 2011 filed and dismissed June 20, 2011.

A grantable petition under 37 CFR 1.47(a) requires: (1) proof that the non-signing inventor cannot be reached or refuses to sign the oath or declaration after having been presented with the application papers (specification, claims and drawings); (2) an acceptable oath or declaration in compliance with 35 U.S.C. §§ 115 and 116; (3) the petition fee; and (4) a statement of the last known address of the non-signing inventor.

The instant petition fails to satisfy requirement (1) set forth above. Petitioners assert that the non-signing inventor cannot be located for presentation of the application papers. The petition and accompanying documents assert that the non-signing inventor cannot be reached at his last known address. An investigative report (and English language transcript) accompanies the petition and asserts searches of the white pages and yellow pages, presumably telephone directories, were made and that no information regarding the non-signing inventor was discovered.

The instant petition fails to satisfy requirement (1) set forth above. Petitioners assert that the non-signing inventor cannot be located for presentation of the application papers. Petitioners continue to assert that correspondence directed to the non-signing inventor at the non-signing inventor's last known address was returned as undeliverable and that the non-signing inventor could not be reached

via telephone. The declaration of Daniel Cohen references a bailiff's report. A copy of this report does not appear to have been provided to the Office.

Petitioners have failed to provide any documentary evidence of the efforts to locate the non-signing inventor. Seemingly available documents, such as the investigator's report referenced in the previous petition and the bailiff's report referenced in the instant petition, have not been provided to the Office. Accordingly, it cannot be found that the non-signing inventor cannot be reached or located.

Where inability to reach or locate a non-signing inventor is alleged, petitioners are required to establish that diligent effort was made to locate the non-signing inventor and provide the non-signing inventor with a complete copy of the patent application (specification, including claims, drawings, and oath or declaration). Petitioners have not established that diligent effort has been made to locate the non-signing inventor for presentation of the application papers.

Any renewed petition must be supported by evidence that sufficiently establishes that despite diligent effort, the non-signing inventor cannot be located. A statement of facts should be submitted that fully describes the exact facts that are relied on to establish that a *diligent effort* was made to locate the non-signing inventor. The statement of facts must be signed, where at all possible, by a person having *firsthand knowledge* of the facts recited therein. Statements based on hearsay, will not normally be accepted. At the very least, a search of the internet and human resource records, etc. should be undertaken. *Petitioner should reference and supply evidence of any such searches in a renewed petition.* See, MPEP 409.03(d).

As to item (4), the last known address of the non-signing inventor has been provided. However, should further research reveal a more current address for the non-signing inventor, such information should be provided by way of renewed petition.

An application filed pursuant to 37 CFR 1.47 must state the last known address of the non-signing inventor. That address should be the last known address at which the inventor customarily receives mail. Ordinarily, the last known address will be the last known residence of the non-signing inventor. Inasmuch as a non-signing inventor is notified that an application pursuant to 37 CFR 1.47 has been filed on his or her behalf, other addresses at which the non-signing inventor may be reached should also be given. Each applicant's mailing or post office address is required to be supplied on the oath or declaration, if not stated in an application data sheet. Applicant's mailing address means that address at which he or she customarily receives his or her mail. Either applicant's home or business address is acceptable as the mailing address. The mailing address should include the ZIP Code designation. The object of requiring each applicant's mailing address is to enable the Office to communicate directly with the applicant if desired; hence, the address of the attorney with instruction to send communications to applicant in care of the attorney is not sufficient. In situations where an inventor does not execute the oath or declaration and the inventor is not deceased, such as in an application filed under 37 CFR 1.47, the inventor's most recent home address must be given to enable the Office to communicate directly with the inventor as necessary. See, MPEP §§ 409.03(e) and 605.03.

Further correspondence with respect to this matter should be addressed as follows:

By mail:

Mail Stop Petition
Commissioner for Patents
P.O. Box 1450

	Alexandria, VA 22313-1450
By facsimile:	(571) 273-8300
By hand:	U.S. Patent and Trademark Office Customer Service Window Mail Stop Petition Randolph Building 401 Dulany Street Alexandria, VA 22314

Telephone inquiries related to this decision may be directed to the undersigned at (571) 272-3205.

/ALESIA M. BROWN/

Alesia M. Brown
Attorney Advisor
Office of Petitions

UNITED STATES PATENT AND TRADEMARK OFFICE

Commissioner for Patents
United States Patent and Trademark Office
P.O. Box 1450
Alexandria, VA 22313-1450
www.uspto.gov

MAILED

DEC 06 2011

OFFICE OF PETITIONS

OCCHIUTI ROHLICEK & TSAO, LLP
10 FAWCETT STREET
CAMBRIDGE MA 02138

In re Application of
Cohen, et al.
Application No. 12/915,689
Filed: October 29, 2010
Atty. Dkt. No.: 55611-003001

: DECISION GRANTING STATUS
: UNDER 37 CFR 1.47(a)

This decision is in response to the renewed petition under 37 CFR 1.47(a) filed November 14, 2011.

The petition is GRANTED.

Petitioners have shown that despite diligent effort the non-signing inventor cannot be reached for presentation of the application papers for the above-identified application for patent.

The application and papers have been reviewed and found in compliance with 37 CFR 1.47(a). This application is hereby accorded Rule 1.47(a) status.

As provided in 37 CFR 1.47(c), this Office will forward notice of this application's filing to the non-signing inventor at the address given in the petition. Notice of the filing of this application will also be published in the Official Gazette.

This application is being referred to the Office of Patent Application Processing for pre-examination processing.

Telephone inquiries regarding this decision should be directed to the undersigned at (571) 272-3205.

/ALESIA M. BROWN/

Alesia M. Brown
Attorney Advisor
Office of Petitions

UNITED STATES PATENT AND TRADEMARK OFFICE

Commissioner for Patents
United States Patent and Trademark Office
P.O. Box 1450
Alexandria, VA 22313-1450
www.uspto.gov

OXANA GUERASSIMENKO
22, rue de la Foret
F-91490 Milly-la-Foret
France

MAILED
DEC 06 2011
OFFICE OF PETITIONS

In re Application of
Cohen, et al.
Application No. 12/915,689
Filed: October 29, 2010
Atty. Dkt. No.: 55611-003001

Dear Madam:

You are named as a joint inventor in the above-identified United States patent application, filed under the provisions of 35 U.S.C. 116 (United States Code), and 37 CFR 1.47(a), Rules of Practice in Patent Cases. Should a patent be granted on the application you will be designated therein as a joint inventor.

As a named inventor you are entitled to inspect any paper in the file wrapper of the application, order copies of all or any part thereof (at a prepaid cost per 37 CFR 1.19) or make your position of record in the application. Alternatively, you may arrange to do any of the preceding through a registered patent attorney or agent presenting written authorization from you. If you care to join the application, counsel of record (see below) would presumably assist you. Joining the application would entail the filing of an appropriate oath or declaration by you pursuant to 37 CFR 1.63.

Telephone inquiries regarding this communication should be directed to the undersigned at (571) 272-3205. Requests for information regarding your application should be directed to the File Information Unit at (703) 308-2733. Information regarding how to pay for and order a copy of the application, or a specific paper in the application, should be directed to the Certification Division at (571) 272-3150 or 1 (800) 972-6382 (outside the Washington, DC area).

/ALESIA M. BROWN/

Alesia M. Brown
Attorney Advisor
Office of Petitions

cc: OCCHIUTI ROHLICEK & TSAO, LLP
10 FAWCETT STREET
CAMBRIDGE MA 02138

UNITED STATES PATENT AND TRADEMARK OFFICE

Commissioner for Patents
United States Patent and Trademark Office
P.O. Box 1450
Alexandria, VA 22313-1450
www.uspto.gov

OBLON, SPIVAK, MCCLELLAND MAIER & NEUSTADT, L.L.P.
1940 DUKE STREET
ALEXANDRIA VA 22314

MAILED
FEB 24 2011
OFFICE OF PETITIONS

In re Application of	:	
Hayashi et al.	:	
Application No. 12/915,690	:	ON PETITION
Filed: October 29, 2010	:	
Attorney Docket No. 370049US99CONT	:	

This is a decision on the petition under 37 CFR 1.182, filed January 12, 2011, to change the order of the names of the inventors.

The petition is **GRANTED**.

The order of the names of the inventors will be changed as follows:

1. Yuko Hayashi
2. Hiroshi Wada

Further, petitioner contends that "the order of inventors is not correct on the Official Filing Receipt or in the bibliographic data for the present application." However, the Declaration filed October 29, 2010 clearly states the first and second named inventor as recorded by the USPTO.

A Corrected Filing Receipt reflecting the above changes is enclosed.

This matter is now being referred to Technology Center AU 1765 to await examination.

Telephone inquiries regarding this decision should be directed to Joan Olszewski at (571) 272-7751. All other inquiries should be directed to the Technology Center.

/Liana Walsh/
Liana Walsh
Petitions Examiner
Office of Petitions

Enclosure: Corrected Filing Receipt

UNITED STATES PATENT AND TRADEMARK OFFICE

UNITED STATES DEPARTMENT OF COMMERCE
United States Patent and Trademark Office
Address: COMMISSIONER FOR PATENTS
P.O. Box 1450
Alexandria, Virginia 22313-1450
www.uspto.gov

APPLICATION NUMBER	FILING or 371(c) DATE	GRP ART UNIT	FIL FEE REC'D	ATTY.DOCKET.NO	TOT CLAIMS	IND CLAIMS
12/915,690	10/29/2010	1765	1090	370049US99CONT	9	1

CONFIRMATION NO. 8112

CORRECTED FILING RECEIPT

22850
OBLON, SPIVAK, MCCLELLAND MAIER & NEUSTADT, L.L.P.
1940 DUKE STREET
ALEXANDRIA, VA 22314

OC000000046087665

Date Mailed: 02/18/2011

Receipt is acknowledged of this non-provisional patent application. The application will be taken up for examination in due course. Applicant will be notified as to the results of the examination. Any correspondence concerning the application must include the following identification information: the U.S. APPLICATION NUMBER, FILING DATE, NAME OF APPLICANT, and TITLE OF INVENTION. Fees transmitted by check or draft are subject to collection. Please verify the accuracy of the data presented on this receipt. **If an error is noted on this Filing Receipt, please submit a written request for a Filing Receipt Correction. Please provide a copy of this Filing Receipt with the changes noted thereon. If you received a "Notice to File Missing Parts" for this application, please submit any corrections to this Filing Receipt with your reply to the Notice. When the USPTO processes the reply to the Notice, the USPTO will generate another Filing Receipt incorporating the requested corrections**

Applicant(s)

Yuko Hayashi, Tokyo, JAPAN;
Hiroshi Wada, Tokyo, JAPAN;

Assignment For Published Patent Application

ASAHI GLASS COMPANY, LIMITED, Tokyo, JAPAN

Power of Attorney: The patent practitioners associated with Customer Number 22850

Domestic Priority data as claimed by applicant

This application is a CON of PCT/JP09/59726 05/27/2009

Foreign Applications (You may be eligible to benefit from the **Patent Prosecution Highway** program at the USPTO. Please see http://www.uspto.gov for more information.)
JAPAN 2008-141795 05/30/2008

Request to Retrieve - This application either claims priority to one or more applications filed in an intellectual property Office that participates in the Priority Document Exchange (PDX) program or contains a proper **Request to Retrieve Electronic Priority Application(s)** (PTO/SB/38 or its equivalent). Consequently, the USPTO will attempt to electronically retrieve these priority documents.

If Required, Foreign Filing License Granted: 11/10/2010

The country code and number of your priority application, to be used for filing abroad under the Paris Convention, is **US 12/915,690**

Projected Publication Date: 02/24/2011

Non-Publication Request: No

Early Publication Request: No

Title

RIGID FOAMED SYNTHETIC RESIN AND PROCESS FOR ITS PRODUCTION

Preliminary Class

521

PROTECTING YOUR INVENTION OUTSIDE THE UNITED STATES

Since the rights granted by a U.S. patent extend only throughout the territory of the United States and have no effect in a foreign country, an inventor who wishes patent protection in another country must apply for a patent in a specific country or in regional patent offices. Applicants may wish to consider the filing of an international application under the Patent Cooperation Treaty (PCT). An international (PCT) application generally has the same effect as a regular national patent application in each PCT-member country. The PCT process **simplifies** the filing of patent applications on the same invention in member countries, but **does not result** in a grant of "an international patent" and does not eliminate the need of applicants to file additional documents and fees in countries where patent protection is desired.

Almost every country has its own patent law, and a person desiring a patent in a particular country must make an application for patent in that country in accordance with its particular laws. Since the laws of many countries differ in various respects from the patent law of the United States, applicants are advised to seek guidance from specific foreign countries to ensure that patent rights are not lost prematurely.

Applicants also are advised that in the case of inventions made in the United States, the Director of the USPTO must issue a license before applicants can apply for a patent in a foreign country. The filing of a U.S. patent application serves as a request for a foreign filing license. The application's filing receipt contains further information and guidance as to the status of applicant's license for foreign filing.

Applicants may wish to consult the USPTO booklet, "General Information Concerning Patents" (specifically, the section entitled "Treaties and Foreign Patents") for more information on timeframes and deadlines for filing foreign patent applications. The guide is available either by contacting the USPTO Contact Center at 800-786-9199, or it can be viewed on the USPTO website at http://www.uspto.gov/web/offices/pac/doc/general/index.html.

For information on preventing theft of your intellectual property (patents, trademarks and copyrights), you may wish to consult the U.S. Government website, http://www.stopfakes.gov. Part of a Department of Commerce initiative, this website includes self-help "toolkits" giving innovators guidance on how to protect intellectual property in specific countries such as China, Korea and Mexico. For questions regarding patent enforcement issues, applicants may call the U.S. Government hotline at 1-866-999-HALT (1-866-999-4158).

LICENSE FOR FOREIGN FILING UNDER

Title 35, United States Code, Section 184

Title 37, Code of Federal Regulations, 5.11 & 5.15

GRANTED

The applicant has been granted a license under 35 U.S.C. 184, if the phrase "IF REQUIRED, FOREIGN FILING LICENSE GRANTED" followed by a date appears on this form. Such licenses are issued in all applications where the conditions for issuance of a license have been met, regardless of whether or not a license may be required as

set forth in 37 CFR 5.15. The scope and limitations of this license are set forth in 37 CFR 5.15(a) unless an earlier license has been issued under 37 CFR 5.15(b). The license is subject to revocation upon written notification. The date indicated is the effective date of the license, unless an earlier license of similar scope has been granted under 37 CFR 5.13 or 5.14.

This license is to be retained by the licensee and may be used at any time on or after the effective date thereof unless it is revoked. This license is automatically transferred to any related applications(s) filed under 37 CFR 1.53(d). This license is not retroactive.

The grant of a license does not in any way lessen the responsibility of a licensee for the security of the subject matter as imposed by any Government contract or the provisions of existing laws relating to espionage and the national security or the export of technical data. Licensees should apprise themselves of current regulations especially with respect to certain countries, of other agencies, particularly the Office of Defense Trade Controls, Department of State (with respect to Arms, Munitions and Implements of War (22 CFR 121-128)); the Bureau of Industry and Security, Department of Commerce (15 CFR parts 730-774); the Office of Foreign AssetsControl, Department of Treasury (31 CFR Parts 500+) and the Department of Energy.

NOT GRANTED

No license under 35 U.S.C. 184 has been granted at this time, if the phrase "IF REQUIRED, FOREIGN FILING LICENSE GRANTED" DOES NOT appear on this form. Applicant may still petition for a license under 37 CFR 5.12, if a license is desired before the expiration of 6 months from the filing date of the application. If 6 months has lapsed from the filing date of this application and the licensee has not received any indication of a secrecy order under 35 U.S.C. 181, the licensee may foreign file the application pursuant to 37 CFR 5.15(b).

UNITED STATES PATENT AND TRADEMARK OFFICE

COMMISSIONER FOR PATENTS
UNITED STATES PATENT AND TRADEMARK OFFICE
P.O. BOX 1450
ALEXANDRIA, VA 22313-1450
www.uspto.gov

OCCHIUTI ROHLICEK & TSAO, LLP
10 FAWCETT STREET
CAMBRIDGE MA 02138

MAILED
JUN 20 2011
OFFICE OF PETITIONS

In re Application of
Cohen, et al.
Application No. 12/915,709
Filed: October 29, 2010
Atty. Dkt. No.: 55611-004001

: DECISION REFUSING STATUS
: UNDER 37 CFR 1.47(a)

This decision is in response to the petition under 37 CFR 1.47(a) filed June 9, 2011.

The petition under 37 CFR 1.47(a) is **DISMISSED**.

Petitioners are given TWO MONTHS from the mailing date of this decision to reply, correcting the below-noted deficiencies. Any reply should be entitled "Request for Reconsideration of Petition Under 37 CFR 1.47(a)," and should only address the deficiencies noted herein. The reply under 37 CFR 1.47(a) may include an oath or declaration executed by the non-signing inventors. Any extensions of time will be governed by 37 CFR 1.136(a).

The above-identified application was filed October 29, 2010 without an executed oath or declaration. Accordingly, a Notice to File Missing Parts of Nonprovisional Application (Notice) was mailed November 15, 2010. The Notice required a surcharge and an executed oath or declaration.

A grantable petition under 37 CFR 1.47(a) requires: (1) proof that the non-signing inventor cannot be reached or refuses to sign the oath or declaration after having been presented with the application papers (specification, claims and drawings); (2) an acceptable oath or declaration in compliance with 35 U.S.C. §§ 115 and 116; (3) the petition fee; and (4) a statement of the last known address of the non-signing inventor.

The instant petition fails to satisfy requirement (1) set forth above. Petitioners assert that the non-signing inventor cannot be located for presentation of the application papers. The petition and accompanying documents assert that the non-signing inventor cannot be reached at his last known address. An investigative report (and English language transcript) accompanies the petition and asserts searches of the white pages and yellow pages, presumably telephone directories, were made and that no information regarding the non-signing inventor was discovered.

The investigative report fails to provide documentary evidence of the efforts to locate the non-signing inventor.

Where inability to reach or locate a non-signing inventor is alleged, petitioners are required to establish that diligent effort was made to locate the non-signing inventor and provide the non-signing inventor with a complete copy of the patent application (specification, including claims,

drawings, and oath or declaration). Petitioners have not established that diligent effort has been made to locate the non-signing inventor for presentation of the application papers.

Any renewed petition must be supported by evidence that sufficiently establishes that despite diligent effort, the non-signing inventor cannot be located. A statement of facts should be submitted that fully describes the exact facts that are relied on to establish that a *diligent effort* was made to locate the non-signing inventor. The statement of facts must be signed, where at all possible, by a person having *firsthand knowledge* of the facts recited therein. Statements based on hearsay, will not normally be accepted. At the very least, a search of the internet and human resource records, etc. should be undertaken. *Petitioner should reference and supply evidence of any such searches in a renewed petition.* See, MPEP 409.03(d).

As to item (3), the required petition fee has been charged to the authorized deposit account.

As to item (4), the last known address of the non-signing inventor has been provided. However, should further research reveal a more current address for the non-signing inventor, such information should be provided by way of renewed petition.

An application filed pursuant to 37 CFR 1.47 must state the last known address of the non-signing inventor. That address should be the last known address at which the inventor customarily receives mail. Ordinarily, the last known address will be the last known residence of the non-signing inventor. Inasmuch as a non-signing inventor is notified that an application pursuant to 37 CFR 1.47 has been filed on his or her behalf, other addresses at which the non-signing inventor may be reached should also be given. Each applicant's mailing or post office address is required to be supplied on the oath or declaration, if not stated in an application data sheet. Applicant's mailing address means that address at which he or she customarily receives his or her mail. Either applicant's home or business address is acceptable as the mailing address. The mailing address should include the ZIP Code designation. The object of requiring each applicant's mailing address is to enable the Office to communicate directly with the applicant if desired; hence, the address of the attorney with instruction to send communications to applicant in care of the attorney is not sufficient. In situations where an inventor does not execute the oath or declaration and the inventor is not deceased, such as in an application filed under 37 CFR 1.47, the inventor's most recent home address must be given to enable the Office to communicate directly with the inventor as necessary. See, MPEP §§ 409.03(e) and 605.03.

Further correspondence with respect to this matter should be addressed as follows:

By mail:	Mail Stop Petition Commissioner for Patents P.O. Box 1450 Alexandria, VA 22313-1450
By facsimile:	(571) 273-8300
By hand:	U.S. Patent and Trademark Office Customer Service Window Mail Stop Petition Randolph Building 401 Dulany Street

Alexandria, VA 22314

Telephone inquiries related to this decision may be directed to the undersigned at (571) 272-3205.

/ALESIA M. BROWN/

Alesia M. Brown
Attorney Advisor
Office of Petitions

UNITED STATES PATENT AND TRADEMARK OFFICE

Commissioner for Patents
United States Patent and Trademark Office
P.O. Box 1450
Alexandria, VA 22313-1450
www.uspto.gov

MAILED
SEP 13 2011
OFFICE OF PETITIONS

OCCHIUTI ROHLICEK & TSAO, LLP
10 FAWCETT STREET
CAMBRIDGE MA 02138

In re Application of	:
Cohen, et al.	: DECISION REFUSING STATUS
Application No. 12/915,709	: UNDER 37 CFR 1.47(a)
Filed: October 29, 2010	:
Atty. Dkt. No.: 55611-004001	:

This decision is in response to the renewed petition under 37 CFR 1.47(a) filed August 19, 2011.

The petition under 37 CFR 1.47(a) is **DISMISSED**.

Petitioners are given TWO MONTHS from the mailing date of this decision to reply, correcting the below-noted deficiencies. Any reply should be entitled "Request for Reconsideration of Petition Under 37 CFR 1.47(a)," and should only address the deficiencies noted herein. The reply under 37 CFR 1.47(a) may include an oath or declaration executed by the non-signing inventors. Any extensions of time will be governed by 37 CFR 1.136(a).

The above-identified application was filed October 29, 2010 without an executed oath or declaration. Accordingly, a Notice to File Missing Parts of Nonprovisional Application (Notice) was mailed November 15, 2010. The Notice required a surcharge and an executed oath or declaration. A petition under 37 CFR 1.47(a) was filed June 9, 2011 and dismissed June 20, 2011.

A grantable petition under 37 CFR 1.47(a) requires: (1) proof that the non-signing inventor cannot be reached or refuses to sign the oath or declaration after having been presented with the application papers (specification, claims and drawings); (2) an acceptable oath or declaration in compliance with 35 U.S.C. §§ 115 and 116; (3) the petition fee; and (4) a statement of the last known address of the non-signing inventor.

The instant petition fails to satisfy requirement (1) set forth above. Petitioners assert that the non-signing inventor cannot be located for presentation of the application papers. Petitioners continue to assert that correspondence directed to the non-signing inventor at the non-signing inventor's last known address was returned as undeliverable and that the non-signing inventor could not be reached via telephone. The declaration of Daniel Cohen references a bailiff's report. A copy of this report does not appear to have been provided to the Office.

Petitioners have failed to provide any documentary evidence of the efforts to locate the non-signing inventor. Seemingly available documents, such as the investigator's report referenced in the previous petition and the bailiff's report referenced in the instant petition, have not been provided to the Office. Accordingly, it cannot be found that the non-signing inventor cannot be reached or located.

Where inability to reach or locate a non-signing inventor is alleged, petitioners are required to establish that diligent effort was made to locate the non-signing inventor and provide the non-signing inventor with a complete copy of the patent application (specification, including claims, drawings, and oath or declaration). Petitioners have not established that diligent effort has been made to locate the non-signing inventor for presentation of the application papers.

Any renewed petition must be supported by evidence that sufficiently establishes that despite diligent effort, the non-signing inventor cannot be located. A statement of facts should be submitted that fully describes the exact facts that are relied on to establish that a *diligent effort* was made to locate the non-signing inventor. The statement of facts must be signed, where at all possible, by a person having *firsthand knowledge* of the facts recited therein. Statements based on hearsay, will not normally be accepted. At the very least, a search of the internet and human resource records, etc. should be undertaken. *Petitioner should reference and supply evidence of any such searches in a renewed petition.* See, MPEP 409.03(d).

As to item (4), the last known address of the non-signing inventor has been provided. However, should further research reveal a more current address for the non-signing inventor, such information should be provided by way of renewed petition.

An application filed pursuant to 37 CFR 1.47 must state the last known address of the non-signing inventor. That address should be the last known address at which the inventor customarily receives mail. Ordinarily, the last known address will be the last known residence of the non-signing inventor. Inasmuch as a non-signing inventor is notified that an application pursuant to 37 CFR 1.47 has been filed on his or her behalf, other addresses at which the non-signing inventor may be reached should also be given. Each applicant's mailing or post office address is required to be supplied on the oath or declaration, if not stated in an application data sheet. Applicant's mailing address means that address at which he or she customarily receives his or her mail. Either applicant's home or business address is acceptable as the mailing address. The mailing address should include the ZIP Code designation. The object of requiring each applicant's mailing address is to enable the Office to communicate directly with the applicant if desired; hence, the address of the attorney with instruction to send communications to applicant in care of the attorney is not sufficient. In situations where an inventor does not execute the oath or declaration and the inventor is not deceased, such as in an application filed under 37 CFR 1.47, the inventor's most recent home address must be given to enable the Office to communicate directly with the inventor as necessary. See, MPEP §§ 409.03(e) and 605.03.

Further correspondence with respect to this matter should be addressed as follows:

By mail:	Mail Stop Petition Commissioner for Patents P.O. Box 1450 Alexandria, VA 22313-1450
By facsimile:	(571) 273-8300
By hand:	U.S. Patent and Trademark Office Customer Service Window Mail Stop Petition Randolph Building

401 Dulany Street
Alexandria, VA 22314

Telephone inquiries related to this decision may be directed to the undersigned at (571) 272-3205.

/ALESIA M. BROWN/

Alesia M. Brown
Attorney Advisor
Office of Petitions

UNITED STATES PATENT AND TRADEMARK OFFICE

Commissioner for Patents
United States Patent and Trademark Office
P.O. Box 1450
Alexandria, VA 22313-1450
www.uspto.gov

OCCHIUTI ROHLICEK & TSAO, LLP
10 FAWCETT STREET
CAMBRIDGE MA 02138

MAILED
NOV 22 2011
OFFICE OF PETITIONS

In re Application of	:
Cohen, et al.	: DECISION GRANTING STATUS
Application No. 12/915,709	: UNDER 37 CFR 1.47(a)
Filed: October 29, 2010	:
Atty. Dkt. No.: 55611-004001	:

This decision is in response to the renewed petition under 37 CFR 1.47(a) filed November 14, 2011.

The petition is GRANTED.

Petitioners have shown that the non-signing inventor has refused to join in the application for patent.

The application and papers have been reviewed and found in compliance with 37 CFR 1.47(a). This application is hereby accorded Rule 1.47(a) status.

As provided in 37 CFR 1.47(c), this Office will forward notice of this application's filing to the non-signing inventor at the address given in the petition. Notice of the filing of this application will also be published in the Official Gazette.

This application is being referred to the Office of Patent Application Processing for pre-examination processing.

Telephone inquiries regarding this decision should be directed to the undersigned at (571) 272-3205.

/ALESIA M. BROWN/

Alesia M. Brown
Attorney Advisor
Office of Petitions

UNITED STATES PATENT AND TRADEMARK OFFICE

Commissioner for Patents
United States Patent and Trademark Office
P.O. Box 1450
Alexandria, VA 22313-1450
www.uspto.gov

OXANA GUERASSIMENKO
22, rue de la Foret
F-91490 Milly-la-Foret
France

MAILED
NOV 22 2011
OFFICE OF PETITIONS

In re Application of
Cohen, et al.
Application No. 12/915,709
Filed: October 29, 2010
Atty. Dkt. No.: 55611-004001

Dear Madam:

You are named as a joint inventor in the above-identified United States patent application, filed under the provisions of 35 U.S.C. 116 (United States Code), and 37 CFR 1.47(a), Rules of Practice in Patent Cases. Should a patent be granted on the application you will be designated therein as a joint inventor.

As a named inventor you are entitled to inspect any paper in the file wrapper of the application, order copies of all or any part thereof (at a prepaid cost per 37 CFR 1.19) or make your position of record in the application. Alternatively, you may arrange to do any of the preceding through a registered patent attorney or agent presenting written authorization from you. If you care to join the application, counsel of record (see below) would presumably assist you. Joining the application would entail the filing of an appropriate oath or declaration by you pursuant to 37 CFR 1.63.

Telephone inquiries regarding this communication should be directed to the undersigned at (571) 272-3205. Requests for information regarding your application should be directed to the File Information Unit at (703) 308-2733. Information regarding how to pay for and order a copy of the application, or a specific paper in the application, should be directed to the Certification Division at (571) 272-3150 or 1 (800) 972-6382 (outside the Washington, DC area).

/ALESIA M. BROWN/

Alesia M. Brown
Attorney Advisor
Office of Petitions

cc: OCCHIUTI ROHLICEK & TSAO, LLP
10 FAWCETT STREET
CAMBRIDGE MA 02138

UNITED STATES PATENT AND TRADEMARK OFFICE

Commissioner for Patents
United States Patent and Trademark Office
P.O. Box 1450

MAILED
JUL 22 2011
OFFICE OF PETITIONS

OCCHIUTI ROHLICEK & TSAO, LLP
10 FAWCETT STREET
CAMBRIDGE MA 02138

In re Application of	:	
Daniel COHEN et al.	:	ON PETITION
Application No. 12/915,722	:	
Filed: October 29, 2010	:	
Atty. Docket No.: 55611-005001		

This is in response to the petition under 37 CFR 1.47(a), filed June 10, 2011.

The petition is **DISMISSED**.

Rule 47 applicant is given **TWO (2) MONTHS** from the mailing date of this decision to reply, correcting the below-noted deficiencies. Any reply should be entitled "Request for Reconsideration of Petition Under 37 CFR 1.47(a)," and should only address the deficiencies noted below, except that the reply may include an oath or declaration executed by the non-signing inventor. **FAILURE TO RESPOND WILL RESULT IN ABANDONMENT OF THE APPLICATION.** Any extensions of time will be governed by 37 CFR 1.136(a).

A grantable petition under 37 CFR 1.47(a) requires:

> (1) proof that the non-signing inventor cannot be reached or refuses to sign the oath or declaration after having been presented with the application papers (specification, claims, and drawings);
> (2) an acceptable oath or declaration in compliance with 35 U.S.C. §§ 115 and 116;
> (3) the petition fee; and
> (4) a statement of the last known address of the non-signing inventor.

The instant petition lacks item (1).

Regarding item (1), rule 47 applicant must demonstrate with documented evidence that an inventor refuses to join in the application <u>after having been presented with the application papers (specification, claims, drawings, and oath or declaration)</u>. There is no indication herein that non-signing inventor Oxana Güerassimenko was presented with a copy of the complete application papers for this application. From the evidence

provided, it only appears that Oxana Guerassimenko was presented with papers relating to international application PCT/EP2008/066468, not U.S. patent application 12/915,722. Ms. Guerassimenko also was presented with papers relating to assignment documents, but again not for application 12/915,722.

If the non-signing inventor was not presented with a copy of the application papers for this application, then the non-signing inventor could not attest that she has "reviewed and understood the application papers" and could not execute the declaration.

Unless petitioner can show that a copy of the application papers was presented to the joint inventors, then petitioner will have to mail a copy of the complete application papers (specification, claims and drawings) to the last known address of the joint inventors, return receipt requested. A cover letter of instructions should accompany the mailing of the application papers setting a deadline or a statement that no response will constitute a refusal. This sort of ultimatum lends support to a finding of refusal by conduct. **The proof of the pertinent events should be made by a statement of someone with firsthand knowledge of the events and should include documentary evidence, such as certified mail return receipt, cover letter of instructions, telegram, etc.** *See* MPEP 409.03(d).

Where there is an express or oral refusal, that fact, along with the time and place of the refusal, must be stated in an affidavit or declaration **by the party to whom the refusal was made**. Where there is a written refusal, a copy of the document(s) evidencing that refusal must be made part of the affidavit or declaration.

When it is concluded by the rule 47 applicant that an omitted inventor's conduct constitutes a refusal, all facts upon which that conclusion is based should be stated in an affidavit or declaration. If there is documentary evidence to support facts alleged in the affidavit or declaration, such evidence must be submitted.

Whenever an omitted inventor gives a reason for refusing to sign the application oath or declaration, that reason should be stated in the affidavit or declaration.

Further correspondence with respect to this matter should be addressed as follows:

By Mail: Mail Stop PETITION
Commissioner for Patents
P. O. Box 1450
Alexandria, VA 22313-1450

By hand: U. S. Patent and Trademark Office
Customer Service Window, Mail Stop Petitions
Randolph Building
401 Dulany Street
Alexandria, VA 22314

The centralized facsimile number is **(571) 273-8300.**

Telephone inquiries relating to this decision should be directed to Robert DeWitty (571-272-8427).

Chris Booth

for Anthony Knight
Director
Office of Petitions

UNITED STATES PATENT AND TRADEMARK OFFICE

Commissioner for Patents
United States Patent and Trademark Office
P.O. Box 1450
Alexandria, VA 22313-1450
www.uspto.gov

MAILED
SEP 19 2011
OFFICE OF PETITIONS

OCCHIUTI ROHLICEK & TSAO, LLP
10 FAWCETT STREET
CAMBRIDGE MA 02138

In re Application of
Cohen, et al.
Application No. 12/915,722
Filed: October 29, 2010
Atty. Dkt. No.: 55611-005001

: DECISION REFUSING STATUS
: UNDER 37 CFR 1.47(a)

This decision is in renewed response to the petition under 37 CFR 1.47(a) filed August 25, 2011.

The petition under 37 CFR 1.47(a) is **DISMISSED**.

Petitioners are given TWO MONTHS from the mailing date of this decision to reply, correcting the below-noted deficiencies. Any reply should be entitled "Request for Reconsideration of Petition Under 37 CFR 1.47(a)," and should only address the deficiencies noted herein. The reply under 37 CFR 1.47(a) may include an oath or declaration executed by the non-signing inventors. Any extensions of time will be governed by 37 CFR 1.136(a).

The above-identified application was filed October 29, 2010 without an executed oath or declaration. Accordingly, a Notice to File Missing Parts of Nonprovisional Application (Notice) was mailed November 16, 2010. The Notice required a surcharge and an executed oath or declaration.

A grantable petition under 37 CFR 1.47(a) requires: (1) proof that the non-signing inventor cannot be reached or refuses to sign the oath or declaration after having been presented with the application papers (specification, claims and drawings); (2) an acceptable oath or declaration in compliance with 35 U.S.C. §§ 115 and 116; (3) the petition fee; and (4) a statement of the last known address of the non-signing inventor.

The instant petition fails to satisfy requirement (1) set forth above. Petitioners assert that the non-signing inventor cannot be located for presentation of the application papers. The petition and accompanying documents assert that the non-signing inventor cannot be reached at his last known address. An investigative report (and English language transcript) accompanies the petition and asserts searches of the white pages and yellow pages, presumably telephone directories, were made and that no information regarding the non-signing inventor was discovered.

The investigative report fails to provide documentary evidence of the efforts to locate the non-signing inventor.

Where inability to reach or locate a non-signing inventor is alleged, petitioners are required to establish that diligent effort was made to locate the non-signing inventor and provide the non-

signing inventor with a complete copy of the patent application (specification, including claims, drawings, and oath or declaration). Petitioners have not established that diligent effort has been made to locate the non-signing inventor for presentation of the application papers.

Any renewed petition must be supported by evidence that sufficiently establishes that despite diligent effort, the non-signing inventor cannot be located. A statement of facts should be submitted that fully describes the exact facts that are relied on to establish that a *diligent effort* was made to locate the non-signing inventor. The statement of facts must be signed, where at all possible, by a person having *firsthand knowledge* of the facts recited therein. Statements based on hearsay, will not normally be accepted. At the very least, a search of the internet and human resource records, etc. should be undertaken. *Petitioner should reference and supply evidence of any such searches in a renewed petition.* See, MPEP 409.03(d).

As to item (3), the required petition fee has been charged to the authorized deposit account.

As to item (4), the last known address of the non-signing inventor has been provided. However, should further research reveal a more current address for the non-signing inventor, such information should be provided by way of renewed petition.

An application filed pursuant to 37 CFR 1.47 must state the last known address of the non-signing inventor. That address should be the last known address at which the inventor customarily receives mail. Ordinarily, the last known address will be the last known residence of the non-signing inventor. Inasmuch as a non-signing inventor is notified that an application pursuant to 37 CFR 1.47 has been filed on his or her behalf, other addresses at which the non-signing inventor may be reached should also be given. Each applicant's mailing or post office address is required to be supplied on the oath or declaration, if not stated in an application data sheet. Applicant's mailing address means that address at which he or she customarily receives his or her mail. Either applicant's home or business address is acceptable as the mailing address. The mailing address should include the ZIP Code designation. The object of requiring each applicant's mailing address is to enable the Office to communicate directly with the applicant if desired; hence, the address of the attorney with instruction to send communications to applicant in care of the attorney is not sufficient. In situations where an inventor does not execute the oath or declaration and the inventor is not deceased, such as in an application filed under 37 CFR 1.47, the inventor's most recent home address must be given to enable the Office to communicate directly with the inventor as necessary. See, MPEP §§ 409.03(e) and 605.03.

Further correspondence with respect to this matter should be addressed as follows:

By mail:

Mail Stop Petition
Commissioner for Patents
P.O. Box 1450
Alexandria, VA 22313-1450

By facsimile:

(571) 273-8300

By hand:

U.S. Patent and Trademark Office
Customer Service Window
Mail Stop Petition
Randolph Building

401 Dulany Street
Alexandria, VA 22314

Telephone inquiries related to this decision may be directed to the undersigned at (571) 272-3205.

/ALESIA M. BROWN/

Alesia M. Brown
Attorney Advisor
Office of Petitions

UNITED STATES PATENT AND TRADEMARK OFFICE

Commissioner for Patents
United States Patent and Trademark Office
P.O. Box 1450
Alexandria, VA 22313-1450
www.uspto.gov

OCCHIUTI ROHLICEK & TSAO, LLP
10 FAWCETT STREET
CAMBRIDGE MA 02138

MAILED
DEC 08 2011
OFFICE OF PETITIONS

In re Application of
Cohen, et al.
Application No. 12/915,722
Filed: October 29, 2010
Atty. Dkt. No.: 55611-005001

: DECISION GRANTING STATUS
: UNDER 37 CFR 1.47(a)

This decision is in renewed response to the petition under 37 CFR 1.47(a) filed November 14, 2011.

The petition is GRANTED.

Petitioners have shown that despite diligent effort the non-signing inventor cannot be reached for presentation of the application papers for the above-identified application for patent.

The application and papers have been reviewed and found in compliance with 37 CFR 1.47(a). This application is hereby accorded Rule 1.47(a) status.

As provided in 37 CFR 1.47(c), this Office will forward notice of this application's filing to the non-signing inventor at the address given in the petition. Notice of the filing of this application will also be published in the Official Gazette.

This application is being referred to the Office of Patent Application Processing for pre-examination processing.

Telephone inquiries regarding this decision should be directed to the undersigned at (571) 272-3205.

/ALESIA M. BROWN/

Alesia M. Brown
Attorney Advisor
Office of Petitions

UNITED STATES PATENT AND TRADEMARK OFFICE

Commissioner for Patents
United States Patent and Trademark Office
P.O. Box 1450
Alexandria, VA 22313-1450
www.uspto.gov

OXANA GUERASSIMENKO
22, rue de la Foret
F-91490 Milly-la-Foret
France

MAILED
DEC 08 2011
OFFICE OF PETITIONS

In re Application of
Cohen, et al.
Application No. 12/915,722
Filed: October 29, 2010
Atty. Dkt. No.: 55611-005001

Dear Madam:

You are named as a joint inventor in the above-identified United States patent application, filed under the provisions of 35 U.S.C. 116 (United States Code), and 37 CFR 1.47(a), Rules of Practice in Patent Cases. Should a patent be granted on the application you will be designated therein as a joint inventor.

As a named inventor you are entitled to inspect any paper in the file wrapper of the application, order copies of all or any part thereof (at a prepaid cost per 37 CFR 1.19) or make your position of record in the application. Alternatively, you may arrange to do any of the preceding through a registered patent attorney or agent presenting written authorization from you. If you care to join the application, counsel of record (see below) would presumably assist you. Joining the application would entail the filing of an appropriate oath or declaration by you pursuant to 37 CFR 1.63.

Telephone inquiries regarding this communication should be directed to the undersigned at (571) 272-3205. Requests for information regarding your application should be directed to the File Information Unit at (703) 308-2733. Information regarding how to pay for and order a copy of the application, or a specific paper in the application, should be directed to the Certification Division at (571) 272-3150 or 1 (800) 972-6382 (outside the Washington, DC area).

/ALESIA M. BROWN/

Alesia M. Brown
Attorney Advisor
Office of Petitions

cc: OCCHIUTI ROHLICEK & TSAO, LLP
10 FAWCETT STREET
CAMBRIDGE MA 02138

Doc Code: PET.GREEN
Document Description: Petition for Green Tech Pilot

PTO/SB/420 (05-10)
Approved for use through 05/31/2010. OMB 0651-0062
U.S. Patent and Trademark Office; U. S. DEPARTMENT OF COMMERCE
Under the Paperwork Reduction Act of 1995, no persons are required to respond to a collection of information unless it displays a valid OMB control number.

PETITION TO MAKE SPECIAL UNDER THE GREEN TECHNOLOGY PILOT PROGRAM

Attorney Docket Number: ID0207US	Application Number (if known): 12/915,732	Filing date: October 29, 2010

First Named Inventor: Maria Magdalena Ramirez Corredores, et al

Title: PRODUCTION OF RENEWABLE BIO-GASOLINE

APPLICANT HEREBY REQUESTS TO PARTICIPATE IN THE GREEN TECHNOLOGY PILOT PROGRAM FOR THE ABOVE-IDENTIFIED APPLICATION. See Instruction Sheet on page 2.

This petition must be timely filed electronically using the USPTO electronic filing system, EFS-Web.

1. By filing this petition:

   Applicant is requesting early publication: Applicant hereby requests early publication under 37 CFR 1.219 and the publication fee set forth in 37 CFR 1.18(d) accompanies this request.

2. By filing this petition: applicant is agreeing to make an election without traverse in a telephonic interview and elect an invention that meets the eligibility requirements set forth in the notice titled "Pilot Program for Green Technologies Including Greenhouse Gas Reduction," as modified by the notice titled "Elimination of Classification Requirement in the Green Technology Pilot Program," each of which was published in the Federal Register, if the Office determines that the claims are not obviously directed to a single invention.

3. This request is accompanied by statements of special status for the eligibility requirement.

4. The application contains no more than three (3) independent claims and twenty (20) total claims.

5. The application does not contain any multiple dependent claims.

6. Other attachments: _____

Signature /jra/	Date January 21, 2011
Name (Print/Typed) Jeffrey R. Anderson	Registration Number 42,263

***Note**: Signatures of all the inventors or assignees of record of the entire interest or their representative(s) are required in accordance with 37 CFR 1.33 and 11.18. Please see 37 CFR 1.4(d) for the form of the signature. If necessary, submit multiple forms for more than one signature, see below*.*

☐ *Total of _____ forms are submitted.

The information is required to obtain or retain a benefit by the public which is to file (and by the USPTO to process) an application. Confidentiality is governed by 35 U.S.C. 122 and 37 CFR 1.11 and 1.14. This collection is estimated to take 12 hours to complete, including gathering, preparing, and submitting the completed application form to the USPTO. Time will vary depending upon the individual case. Any comments on the amount of time you require to complete this form and/or suggestions for reducing this burden, should be sent to the Chief Information Officer, U.S. Patent and Trademark Office, U.S. Department of Commerce, P.O. Box 1450, Alexandria, VA 22313-1450. DO NOT SEND FEES OR COMPLETED FORMS TO THIS ADDRESS. **SEND TO: Commissioner for Patents, P.O. Box 1450, Alexandria, VA 22313-1450.**

If you need assistance in completing the form, call 1-800-PTO-9199 and select option 2.

Under the Paperwork Reduction Act of 1995, no persons are required to respond to a collection of information unless it displays a valid OMB control number.

Instruction Sheet for Petition to Make Special Under the Green Technology Pilot Program

(Not to be Submitted to the USPTO)

The following is a summary of the requirements (for more information see the notices (i) "Pilot Program for Green Technologies Including Greenhouse Gas Reduction" and (ii) "Elimination of Classification Requirement in the Green Technology Pilot Program," available on the USPTO web site at http://www.uspto.gov/patents/init_events/green_tech.jsp):

(1) The application must be a non-reissue, non-provisional utility application filed under 35 U.S.C. 111(a), or an international application that has entered the national stage in compliance with 35 U.S.C. 371. The application must be previously filed before the publication date of the notice cited above. Reexamination proceedings are excluded from this pilot program.

(2) The application must contain three or fewer independent claims and twenty or fewer total claims. The application must not contain any multiple dependent claims. For an application that contains more than three independent claims or twenty total claims, or multiple dependent claims, applicant must file a preliminary amendment in compliance with 37 CFR 1.121 to cancel the excess claims and/or the multiple dependent claims at the time the petition to make special is filed.

(3) The claims must be directed to a single invention that materially enhances the quality of the environment, or that materially contributes to: (1) the discovery or development of renewable energy resources; (2) the more efficient utilization and conservation of energy resources; or (3) green house gas emission reduction (see the eligibility requirements of sections II and III of the notice (i) cited above). The petition must include a statement that, if the USPTO determines that the claims are directed to multiple inventions (e.g., in a restriction requirement), applicant will agree to make an election without traverse in a telephonic interview, and elect an invention that meets the eligibility requirements in section II or III of the notice (i) cited above.

(4) The petition to make special must be timely filed electronically using the USPTO electronic filing system, EFS-Web, and selecting the document description of "Petition for Green Tech Pilot" on the EFS-Web screen. Applicant should use form PTO/SB/420, which is available as a Portable Document Format (PDF) fillable form in EFS-Web and on the USPTO Web site.

(5) The petition to make special must be filed at least one day prior to the date that a first Office action (which may be an Office action containing only a restriction requirement) appears in the Patent Application Information Retrieval (PAIR) system. Applicant may check the status of the application using PAIR.

(6) The petition to make special must be accompanied by a request for early publication in compliance with 37 CFR 1.219 and the publication fee set forth in 37 CFR 1.18(d).

Privacy Act Statement

The **Privacy Act of 1974 (P.L. 93-579)** requires that you be given certain information in connection with your submission of the attached form related to a patent application or patent. Accordingly, pursuant to the requirements of the Act, please be advised that: (1) the general authority for the collection of this information is 35 U.S.C. 2(b)(2); (2) furnishing of the information solicited is voluntary; and (3) the principal purpose for which the information is used by the U.S. Patent and Trademark Office is to process and/or examine your submission related to a patent application or patent. If you do not furnish the requested information, the U.S. Patent and Trademark Office may not be able to process and/or examine your submission, which may result in termination of proceedings or abandonment of the application or expiration of the patent.

The information provided by you in this form will be subject to the following routine uses:

1. The information on this form will be treated confidentially to the extent allowed under the Freedom of Information Act (5 U.S.C. 552) and the Privacy Act (5 U.S.C 552a). Records from this system of records may be disclosed to the Department of Justice to determine whether disclosure of these records is required by the Freedom of Information Act.
2. A record from this system of records may be disclosed, as a routine use, in the course of presenting evidence to a court, magistrate, or administrative tribunal, including disclosures to opposing counsel in the course of settlement negotiations.
3. A record in this system of records may be disclosed, as a routine use, to a Member of Congress submitting a request involving an individual, to whom the record pertains, when the individual has requested assistance from the Member with respect to the subject matter of the record.
4. A record in this system of records may be disclosed, as a routine use, to a contractor of the Agency having need for the information in order to perform a contract. Recipients of information shall be required to comply with the requirements of the Privacy Act of 1974, as amended, pursuant to 5 U.S.C. 552a(m).
5. A record related to an International Application filed under the Patent Cooperation Treaty in this system of records may be disclosed, as a routine use, to the International Bureau of the World Intellectual Property Organization, pursuant to the Patent Cooperation Treaty.
6. A record in this system of records may be disclosed, as a routine use, to another federal agency for purposes of National Security review (35 U.S.C. 181) and for review pursuant to the Atomic Energy Act (42 U.S.C. 218(c)).
7. A record from this system of records may be disclosed, as a routine use, to the Administrator, General Services, or his/her designee, during an inspection of records conducted by GSA as part of that agency's responsibility to recommend improvements in records management practices and programs, under authority of 44 U.S.C. 2904 and 2906. Such disclosure shall be made in accordance with the GSA regulations governing inspection of records for this purpose, and any other relevant (*i.e.*, GSA or Commerce) directive. Such disclosure shall not be used to make determinations about individuals.
8. A record from this system of records may be disclosed, as a routine use, to the public after either publication of the application pursuant to 35 U.S.C. 122(b) or issuance of a patent pursuant to 35 U.S.C. 151. Further, a record may be disclosed, subject to the limitations of 37 CFR 1.14, as a routine use, to the public if the record was filed in an application which became abandoned or in which the proceedings were terminated and which application is referenced by either a published application, an application open to public inspection or an issued patent.
9. A record from this system of records may be disclosed, as a routine use, to a Federal, State, or local law enforcement agency, if the USPTO becomes aware of a violation or potential violation of law or regulation.

UNITED STATES PATENT AND TRADEMARK OFFICE

UNITED STATES DEPARTMENT OF COMMERCE
United States Patent and Trademark Office
Address: COMMISSIONER FOR PATENTS
P.O. Box 1450
Alexandria, Virginia 22313-1450
www.uspto.gov

APPLICATION NO.	FILING DATE	FIRST NAMED INVENTOR	ATTORNEY DOCKET NO.	CONFIRMATION NO.
12/915,732	10/29/2010	Maria Magdalena Ramirez Corredores	ID0207US	8217

90394 7590 02/01/2011
Kior Inc.
13001 Bay Park Rd.
Pasadena, TX 77507

EXAMINER

ART UNIT	PAPER NUMBER
1771	

MAIL DATE	DELIVERY MODE
02/01/2011	PAPER

Please find below and/or attached an Office communication concerning this application or proceeding.

The time period for reply, if any, is set in the attached communication.

UNITED STATES PATENT AND TRADEMARK OFFICE

Commissioner for Patents
United States Patent and Trademark Office
P.O. Box 1450
Alexandria, VA 22313-1450
www.uspto.gov

02/01/2011

Kior Inc.
13001 Bay Park Rd.
Pasadena TX 77507

In re Application of	:	
Ramirez et al.	:	DECISION ON PETITION
Application No. 12/915,732	:	TO MAKE SPECIAL UNDER
Filed: 10/29/2010	:	THE GREEN TECHNOLOGY
Attorney Docket No. **ID0207US**	:	PILOT PROGRAM

This is a decision on the petition under 37 CFR 1.102, filed 1/21/2011, to make the above-identified application special under the pilot program for applications pertaining to Green Technologies as set forth in 74 Federal Register Notice 64666 (December 8, 2009) and amended by 75 Federal Register Notice 28554 (May 21, 2010) and 75 Federal Register Notice 69049 (November 10, 2010).

The petition is **GRANTED**.

A grantable petition to make an application special under 37 CFR 1.102 and the pilot program as set forth in 74 FR 64666 must be directed to a nonprovisional application filed under 35 USC 111(a) or be a national stage entry under 35 USC 371, exclusive of any reissue applications.

In order to qualify for special status, the following requirements must be met. 1) The application must have no more than 3 independent claims and no more than 20 total claims. 2) The application must not contain any multiple dependent claims. 3) The petition must state the basis for seeking special status, i.e., the claimed invention either: A) materially enhances the quality of the environment or B) materially contributes to: i) the discovery or development of renewable energy resources, ii) the more efficient utilization and conservation of energy resources, or iii) greenhouse gas emission reduction. 4) If the disclosure is not clear on its face that the claimed invention materially contributes under category (A) or (B), the petition must be accompanied by a statement by the applicant, assignee, or an attorney/agent registered to practice before the Office explaining how the materiality standard is met. 5) A statement that applicant will agree to make an election without traverse in a telephonic interview if a restriction requirement is made by the examiner. 6) The petition to make special must be filed electronically. 7) The petition must be filed at least one day prior to the date that a first Office Action appears in the Patent Application Information Retrieval (PAIR) system. 8) The petition must be accompanied by a request for early publication in compliance with 37 CFR 1.219 and include the publication fee as set forth in 37 CFR 1.18(d).

The requirement for a fee for consideration of the petition to make special for applications pertaining to Green Technologies has been waived.

The instant petition complies with items 1 – 8 above. Accordingly, the above-identified application has been accorded "special" status.

Telephone inquires concerning this decision should be directed to Tom Dunn at 571-272-1171.

The application is being forwarded to the Technology Center Art Unit 1771 for action on the merits commensurate with this decision.

/Tom Dunn/

Tom Dunn
Quality Assurance Specialist
Technology Center 1700

Doc code : PET.OP.AGE
Description : Petition to make special based on Age/Health

PTO/SB/130 (07-09)
Approved for use through 07/31/2012. OMB 0651- 0031
U.S. Patent and Trademark Office; U.S. DEPARTMENT OF COMMERCE
Under the Paperwork Reduction Act of 1995, no persons are required to respond to a collection of information unless it contains a valid OMB control number

PETITION TO MAKE SPECIAL BASED ON AGE FOR ADVANCEMENT OF EXAMINATION UNDER 37 CFR 1.102(c)(1)

Application Information

Application Number	12/915,753	Confirmation Number	8256	Filing Date	2010-10-29
Attorney Docket Number (optional)	370955US30DIV	Art Unit	3748	Examiner	
First Named Inventor	Lucien BRONICKI				
Title of Invention	POWER PLANT USING ORGANIC WORKING FLUIDS				

Attention: Office of Petitions
An application may be made special for advancement of examination upon filing of a petition showing that the applicant is 65 years of age, or more. No fee is required with such a petition. See 37 CFR 1.102(c)(1) and MPEP 708.02 (IV).

APPLICANT HEREBY PETITIONS TO MAKE SPECIAL FOR ADVANCEMENT OF EXAMINATION IN THIS APPLICATION UNDER 37 CFR 1.102(c)(1) and MPEP 708.02 (IV) ON THE BASIS OF THE APPLICANT'S AGE.

A grantable petition requires one of the following items:
(1) Statement by one named inventor in the application that he/she is 65 years of age, or more; or
(2) Certification by a registered attorney/agent having evidence such as a birth certificate, passport, driver's license, etc. showing one named inventor in the application is 65 years of age, or more.

Name of Inventor who is 65 years of age, or older

Given Name	Middle Name	Family Name	Suffix
LUCIEN		BRONICKI	

A signature of the applicant or representative is required in accordance with 37 CFR 1.33 and 10.18.
Please see 37 CFR 1.4(d) for the format of the signature.

Select (1) or (2) :

○ (1) I am an inventor in this application and I am 65 years of age, or more.

● (2) I am an attorney or agent registered to practice before the Patent and Trademark Office, and I certify that I am in possession of evidence, and will retain such in the application file record, showing that the inventor listed above is 65 years of age, or more.

Signature	/Robert T. Pous/	Date (YYYY-MM-DD)	2012-04-05
Name	Robert T. Pous	Registration Number	29099

PTO/SB/130 (07-09)
Approved for use through 07/31/2012. OMB 0651- 0031
U.S. Patent and Trademark Office; U.S. DEPARTMENT OF COMMERCE
Under the Paperwork Reduction Act of 1995, no persons are required to respond to a collection of information unless it contains a valid OMB control number

Privacy Act Statement

The Privacy Act of 1974 (P.L. 93-579) requires that you be given certain information in connection with your submission of the attached form related to a patent application or patent. Accordingly, pursuant to the requirements of the Act, please be advised that: (1) the general authority for the collection of this information is 35 U.S.C. 2(b)(2); (2) furnishing of the information solicited is voluntary; and (3) the principal purpose for which the information is used by the U.S. Patent and Trademark Office is to process and/or examine your submission related to a patent application or patent. If you do not furnish the requested information, the U.S. Patent and Trademark Office may not be able to process and/or examine your submission, which may result in termination of proceedings or abandonment of the application or expiration of the patent.

The information provided by you in this form will be subject to the following routine uses:

1. The information on this form will be treated confidentially to the extent allowed under the Freedom of Information Act (5 U.S.C. 552) and the Privacy Act (5 U.S.C. 552a). Records from this system of records may be disclosed to the Department of Justice to determine whether the Fr eedom of Information Act requires disclosure of these records.

2. A record from this system of records may be disclosed, as a routine use, in the course of presenting evidence to a court, magistrate, or administrative tribunal, including disclosures to opposing counsel in the course of settlement negotiations.

3. A record in this system of records may be disclosed, as a routine use, to a Member of Congress submitting a request involving an individual, to whom the record pertains, when the individual has requested assistance from the Member with respect to the subject matter of the record.

4. A record in this system of records may be disclosed, as a routine use, to a contractor of the Agency having need for the information in order to perform a contract. Recipients of information shall be required to comply with the requirements of the Privacy Act of 1974, as amended, pursuant to 5 U.S.C. 552a(m).

5. A record related to an International Application filed under the Patent Cooperation Treaty in this system of records may be disclosed, as a routine use, to the International Bureau of the World Intellectual Property Organization, pursuant to the Patent Cooperation Treaty.

6. A record in this system of records may be disclosed, as a routine use, to another federal agency for purposes of National Security review (35 U.S.C. 181) and for review pursuant to the Atomic Energy Act (42 U.S.C. 218(c)).

7. A record from this system of records may be disclosed, as a routine use, to the Administrator, General Services, or his/her designee, during an inspection of records conducted by GSA as part of that agency's responsibility to recommend improvements in records management practices and programs, under authority of 44 U.S.C. 2904 and 2906. Such disclosure shall be made in accordance with the GSA regulations governing inspection of records for this purpose, and any other relevant (i.e., GSA or Commerce) directive. Such disclosure shall not be used to make determinations about indivi duals.

8. A record from this system of records may be disclosed, as a routine use, to the public after either publication of the application pursuant to 35 U.S.C. 122(b) or issuance of a patent pursuant to 35 U.S.C. 151. Further, a record may be disclosed, subject to the limitations of 37 CFR 1.14, as a routine use, to the public if the record was filed in an application which became abandoned or in which the proceedings were terminated and which application is referenced by either a published application, an application open to public inspections or an issued patent.

9. A record from this system of records may be disclosed, as a routine use, to a Federal, State, or local law enforcement agency, if the USPTO becomes aware of a violation or potential violation of law or regulation.

UNITED STATES PATENT AND TRADEMARK OFFICE

Commissioner for Patents
United States Patent and Trademark Office
P.O. Box 1450
Alexandria, VA 22313-1450
www.uspto.gov

In re Application of
Ohad ZIMRON

Application No. 12915753

Filed: October 29,2010

Attorney Docket No. 370955US30DIV

:DECISION ON PETITION TO MAKE SPECIAL
:UNDER 37 CFR 1.102(c)(1)

This is a decision on the electronic petition under 37 CFR 1.102 (c)(1), filed 05-APR-2012 to make the above-identified application special based on applicant's age as set forth in MPEP § 708.02, Section IV.

The petition is **GRANTED**.

A grantable petition to make an application special under 37 CFR 1.102(c)(1), MPEP § 708.02, Section IV: Applicant's Age must include a statement by applicant or a registered practitioner having evidence that applicant is at least 65 years of age. No fee is required.

Accordingly, the above-identified application has been accorded "special" status and will be taken up for action by the examiner upon the completion of all pre-examination processing.

Telephone inquiries concerning this electronic decision should be directed to the Electronic Business Center at 866-217-9197.

All other inquiries concerning either the examination or status of the application should be directed to the Technology Center.

Doc Code: PET.GREEN
Document Description: Petition for Green Tech Pilot

PTO/SB/420 (03-11)

PETITION TO MAKE SPECIAL UNDER THE GREEN TECHNOLOGY PILOT PROGRAM

Attorney Docket Number: GIP-0023	Application Number (if known): 12/915,782	Filing date: October 29, 2010

First Named Inventor: Kyung-il KONG

Title: STREET LAMP

APPLICANT HEREBY REQUESTS TO PARTICIPATE IN THE GREEN TECHNOLOGY PILOT PROGRAM FOR THE ABOVE-IDENTIFIED APPLICATION. See Instruction Sheet on page 2.

This petition must be timely filed electronically using the USPTO electronic filing system, EFS-Web.

1. By filing this petition:

   Applicant is requesting early publication: Applicant hereby requests early publication under 37 CFR 1.219 and the publication fee set forth in 37 CFR 1.18(d) accompanies this request.

2. By filing this petition: applicant is agreeing to make an election without traverse in a telephonic interview and elect an invention that meets the eligibility requirements for the Green Technology Pilot Program, if the Office determines that the claims are not obviously directed to a single invention. See Instruction Sheet.

3. This request is accompanied by statements of special status for the eligibility requirement.

4. The application contains no more than three (3) independent claims and twenty (20) total claims.

5. The application does not contain any multiple dependent claims.

6. Other attachments: _____

Signature	Date May 24, 2011
Name (Print/Typed) Carol L. Druzbick	Registration Number 40,287

Note: *Signatures of all the inventors or assignees of record of the entire interest or their representative(s) are required in accordance with 37 CFR 1.33 and 11.18. Please see 37 CFR 1.4(d) for the form of the signature. If necessary, submit multiple forms for more than one signature, see below*.*

■ *Total of 2 forms are submitted.

If you need assistance in completing the form, call 1-800-PTO-9199 and select option 2.

Docket No.: **GIP-0023** PATENT

IN THE UNITED STATES PATENT AND TRADEMARK OFFICE

In re Application of		Confirmation No.:	**8301**
Kyung-il KONG; Han Gyoul KIM and Kwang Soo KIM		Group Art Unit:	**2875**
Serial No.:	**12/915,782**	Examiner:	**Evan P. DZIERZYNSKI**
Filed:	**October 29, 2010**	Customer No.:	**34610**

For: **STREET LAMP**

STATEMENT OF SPECIAL STATUS FOR ELIGIBILITY UNDER THE GREEN TECHNOLOGY PILOT PROGRAM

U.S. Patent and Trademark Office
Customer Service Window, **MAIL STOP PETITIONS**
Randolph Building
401 Dulany Street
Alexandria, Virginia 22314

Sir:

Special status is sought under 37 CFR §1.102 because the invention materially contributes to the more efficient utilization and conservation of energy resources.

Respectfully submitted,
KED & ASSOCIATES, LLP

Carol L. Druzbick
Registration No. 40,287

Correspondence Address:
P.O. Box 8638
Reston, VA 20195
703 766-3777 CLD/dak
Date: May 24, 2011
Please direct all correspondence to Customer Number 34610
Q:\Documents\2343-023\281224

UNITED STATES PATENT AND TRADEMARK OFFICE

UNITED STATES DEPARTMENT OF COMMERCE
United States Patent and Trademark Office
Address: COMMISSIONER FOR PATENTS
P.O. Box 1450
Alexandria, Virginia 22313-1450
www.uspto.gov

APPLICATION NO.	FILING DATE	FIRST NAMED INVENTOR	ATTORNEY DOCKET NO.	CONFIRMATION NO.
12/915,782	10/29/2010	Kyung-Il KONG	GIP-0023	8301

34610 7590 05/31/2011
KED & ASSOCIATES, LLP
P.O. Box 8638
Reston, VA 20195

EXAMINER
DZIERZYNSKI, EVAN P

ART UNIT	PAPER NUMBER
2875	

MAIL DATE	DELIVERY MODE
05/31/2011	PAPER

Please find below and/or attached an Office communication concerning this application or proceeding.

The time period for reply, if any, is set in the attached communication.

UNITED STATES PATENT AND TRADEMARK OFFICE

Commissioner for Patents
United States Patent and Trademark Office
P.O. Box 1450
Alexandria, VA 22313-1450
www.uspto.gov

KED & ASSOCIATES, LLP
P.O. Box 8638
Reston VA 20195

In re Application of	:	
KONG et al.	:	DECISION ON PETITION
Application No. 12/915,782	:	TO MAKE SPECIAL UNDER
Filed: October 29, 2010	:	THE GREEN TECHNOLOGY
Attorney Docket No. GIP-0023	:	PILOT PROGRAM

This is a decision on the petition under 37 CFR 1.102, filed on May 24, 2011, to make the above-identified application special under the pilot program for applications pertaining to Green Technologies as set forth 74 Federal Register Notice 64666 (December 8, 2009) and amended by 75 Federal Register Notice 28554 (May 21, 2010) and 75 Federal Register Notice 69049 (November 10, 2010).

The petition is **GRANTED**.

A grantable petition to make an application special under 37 CFR 1.102 and the pilot program as set forth in 74 FR 64666 must be directed to a nonprovisional application filed under 35 USC 111(a) or be a national stage entry under 35 USC 371, exclusive of any reissue applications.

In order to qualify for special status, the following requirements must be met. 1) The application must have no more than 3 independent claims and no more than 20 total claims. 2) The application must not contain any multiple dependent claims. 3) The petition must state the basis for seeking special status, i.e., the claimed invention either: A) materially enhances the quality of the environment or B) materially contributes to: i) the discovery or development of renewable energy resources, ii) the more efficient utilization and conservation of energy resources, or iii) greenhouse gas emission reduction. 4) If the disclosure is not clear on its face that the claimed invention materially contributes under category (A) or (B), the petition must be accompanied by a statement by the applicant, assignee, or an attorney/agent registered to practice before the Office explaining how the materiality standard is met. 5) A statement that applicant will agree to make an election without traverse in a telephonic interview if a restriction requirement is made by the examiner. 6) The petition to make special must be filed electronically. 7) The petition must be filed at least one day prior to the date that a first Office Action appears in the Patent Application Information Retrieval (PAIR) system. 8) The petition must be accompanied by a request for early publication in compliance with 37 CFR 1.219 and include the publication fee as set forth in 37 CFR 1.18(d).

The requirement for a fee for consideration of the petition to make special for applications pertaining to Green Technologies has been waived.

The instant petition complies with items 1 – 8 above. Accordingly, the above-identified application has been accorded "special" status.

Telephone inquires concerning this decision should be directed to Lee W. Young at 571-272-4549.

The application is being forwarded to the Technology Center Art Unit 2875 for action on the merits commensurate with this decision.

Lee W. Young
Quality Assurance Specialist
Technology Center 2800

Doc Code: PET.GREEN
Document Description: Petition for Green Tech Pilot

PTO/SB/420 (05-10)
Approved for use through 01/31/2011. OMB 0651-0062
U.S. Patent and Trademark Office; U. S. DEPARTMENT OF COMMERCE
Under the Paperwork Reduction Act of 1995, no persons are required to respond to a collection of information unless it displays a valid OMB control number.

PETITION TO MAKE SPECIAL UNDER THE GREEN TECHNOLOGY PILOT PROGRAM

Attorney Docket Number: O2-0707	Application Number (if known): 12/915,807	Filing date: 10/29/2010

First Named Inventor: Yung-Lin LIN

Title: DIFFERENTIAL DRIVING CIRCUIT FOR POWERING A LIGHT SOURCE

APPLICANT HEREBY REQUESTS TO PARTICIPATE IN THE GREEN TECHNOLOGY PILOT PROGRAM FOR THE ABOVE-IDENTIFIED APPLICATION. See Instruction Sheet on page 2.

This petition must be timely filed electronically using the USPTO electronic filing system, EFS-Web.

1. By filing this petition:

   Applicant is requesting early publication: Applicant hereby requests early publication under 37 CFR 1.219 and the publication fee set forth in 37 CFR 1.18(d) accompanies this request.

2. By filing this petition: applicant is agreeing to make an election without traverse in a telephonic interview and elect an invention that meets the eligibility requirements set forth in the notice titled "Pilot Program for Green Technologies Including Greenhouse Gas Reduction," as modified by the notice titled "Elimination of Classification Requirement in the Green Technology Pilot Program," each of which was published in the Federal Register, if the Office determines that the claims are not obviously directed to a single invention.

3. This request is accompanied by statements of special status for the eligibility requirement.

4. The application contains no more than three (3) independent claims and twenty (20) total claims.

5. The application does not contain any multiple dependent claims.

6. Other attachments: _____

Signature /James P. Hao/	Date 12/13/2010
Name (Print/Typed) James P. Hao	Registration Number 36398

***Note**: Signatures of all the inventors or assignees of record of the entire interest or their representative(s) are required in accordance with 37 CFR 1.33 and 11.18. Please see 37 CFR 1.4(d) for the form of the signature. If necessary, submit multiple forms for more than one signature, see below*.*

☐ *Total of _____ forms are submitted.

The information is required to obtain or retain a benefit by the public which is to file (and by the USPTO to process) an application. Confidentiality is governed by 35 U.S.C. 122 and 37 CFR 1.11 and 1.14. This collection is estimated to take 1 hour to complete, including gathering, preparing, and submitting the completed application form to the USPTO. Time will vary depending upon the individual case. Any comments on the amount of time you require to complete this form and/or suggestions for reducing this burden, should be sent to the Chief Information Officer, U.S. Patent and Trademark Office, U.S. Department of Commerce, P.O. Box 1450, Alexandria, VA 22313-1450. DO NOT SEND FEES OR COMPLETED FORMS TO THIS ADDRESS. **SEND TO: Commissioner for Patents, P.O. Box 1450, Alexandria, VA 22313-1450.**

If you need assistance in completing the form, call 1-800-PTO-9199 and select option 2.

Under the Paperwork Reduction Act of 1995, no persons are required to respond to a collection of information unless it displays a valid OMB control number.

Instruction Sheet for Petition to Make Special Under the Green Technology Pilot Program

(Not to be Submitted to the USPTO)

The following is a summary of the requirements (for more information see the notices (i) "Pilot Program for Green Technologies Including Greenhouse Gas Reduction" and (ii) "Elimination of Classification Requirement in the Green Technology Pilot Program," available on the USPTO web site at http://www.uspto.gov/patents/init_events/green_tech.jsp):

(1) The application must be a non-reissue, non-provisional utility application filed under 35 U.S.C. 111(a), or an international application that has entered the national stage in compliance with 35 U.S.C. 371. The application must be previously filed before the publication date of the notice cited above. Reexamination proceedings are excluded from this pilot program.

(2) The application must contain three or fewer independent claims and twenty or fewer total claims. The application must not contain any multiple dependent claims. For an application that contains more than three independent claims or twenty total claims, or multiple dependent claims, applicant must file a preliminary amendment in compliance with 37 CFR 1.121 to cancel the excess claims and/or the multiple dependent claims at the time the petition to make special is filed.

(3) The claims must be directed to a single invention that materially enhances the quality of the environment, or that materially contributes to: (1) the discovery or development of renewable energy resources; (2) the more efficient utilization and conservation of energy resources; or (3) green house gas emission reduction (see the eligibility requirements of sections II and III of the notice (i) cited above). The petition must include a statement that, if the USPTO determines that the claims are directed to multiple inventions (e.g., in a restriction requirement), applicant will agree to make an election without traverse in a telephonic interview, and elect an invention that meets the eligibility requirements in section II or III of the notice (i) cited above.

(4) The petition to make special must be timely filed electronically using the USPTO electronic filing system, EFS-Web, and selecting the document description of "Petition for Green Tech Pilot" on the EFS-Web screen. Applicant should use form PTO/SB/420, which is available as a Portable Document Format (PDF) fillable form in EFS-Web and on the USPTO Web site.

(5) The petition to make special must be filed at least one day prior to the date that a first Office action (which may be an Office action containing only a restriction requirement) appears in the Patent Application Information Retrieval (PAIR) system. Applicant may check the status of the application using PAIR.

(6) The petition to make special must be accompanied by a request for early publication in compliance with 37 CFR 1.219 and the publication fee set forth in 37 CFR 1.18(d).

Privacy Act Statement

The **Privacy Act of 1974 (P.L. 93-579)** requires that you be given certain information in connection with your submission of the attached form related to a patent application or patent. Accordingly, pursuant to the requirements of the Act, please be advised that: (1) the general authority for the collection of this information is 35 U.S.C. 2(b)(2); (2) furnishing of the information solicited is voluntary; and (3) the principal purpose for which the information is used by the U.S. Patent and Trademark Office is to process and/or examine your submission related to a patent application or patent. If you do not furnish the requested information, the U.S. Patent and Trademark Office may not be able to process and/or examine your submission, which may result in termination of proceedings or abandonment of the application or expiration of the patent.

The information provided by you in this form will be subject to the following routine uses:

1. The information on this form will be treated confidentially to the extent allowed under the Freedom of Information Act (5 U.S.C. 552) and the Privacy Act (5 U.S.C 552a). Records from this system of records may be disclosed to the Department of Justice to determine whether disclosure of these records is required by the Freedom of Information Act.
2. A record from this system of records may be disclosed, as a routine use, in the course of presenting evidence to a court, magistrate, or administrative tribunal, including disclosures to opposing counsel in the course of settlement negotiations.
3. A record in this system of records may be disclosed, as a routine use, to a Member of Congress submitting a request involving an individual, to whom the record pertains, when the individual has requested assistance from the Member with respect to the subject matter of the record.
4. A record in this system of records may be disclosed, as a routine use, to a contractor of the Agency having need for the information in order to perform a contract. Recipients of information shall be required to comply with the requirements of the Privacy Act of 1974, as amended, pursuant to 5 U.S.C. 552a(m).
5. A record related to an International Application filed under the Patent Cooperation Treaty in this system of records may be disclosed, as a routine use, to the International Bureau of the World Intellectual Property Organization, pursuant to the Patent Cooperation Treaty.
6. A record in this system of records may be disclosed, as a routine use, to another federal agency for purposes of National Security review (35 U.S.C. 181) and for review pursuant to the Atomic Energy Act (42 U.S.C. 218(c)).
7. A record from this system of records may be disclosed, as a routine use, to the Administrator, General Services, or his/her designee, during an inspection of records conducted by GSA as part of that agency's responsibility to recommend improvements in records management practices and programs, under authority of 44 U.S.C. 2904 and 2906. Such disclosure shall be made in accordance with the GSA regulations governing inspection of records for this purpose, and any other relevant (*i.e.*, GSA or Commerce) directive. Such disclosure shall not be used to make determinations about individuals.
8. A record from this system of records may be disclosed, as a routine use, to the public after either publication of the application pursuant to 35 U.S.C. 122(b) or issuance of a patent pursuant to 35 U.S.C. 151. Further, a record may be disclosed, subject to the limitations of 37 CFR 1.14, as a routine use, to the public if the record was filed in an application which became abandoned or in which the proceedings were terminated and which application is referenced by either a published application, an application open to public inspection or an issued patent.
9. A record from this system of records may be disclosed, as a routine use, to a Federal, State, or local law enforcement agency, if the USPTO becomes aware of a violation or potential violation of law or regulation.

UNITED STATES PATENT AND TRADEMARK OFFICE

UNITED STATES DEPARTMENT OF COMMERCE
United States Patent and Trademark Office
Address: COMMISSIONER FOR PATENTS
P.O. Box 1450
Alexandria, Virginia 22313-1450
www.uspto.gov

APPLICATION NO.	FILING DATE	FIRST NAMED INVENTOR	ATTORNEY DOCKET NO.	CONFIRMATION NO.
12/915,807	10/29/2010	Yung Lin LIN	0707	8346

71271 7590 12/21/2010
PATENT PROSECUTION
O2MIRCO , INC.
3118 PATRICK HENRY DRIVE
SANTA CLARA, CA 95054

EXAMINER

ART UNIT	PAPER NUMBER
2821	

MAIL DATE	DELIVERY MODE
12/21/2010	PAPER

Please find below and/or attached an Office communication concerning this application or proceeding.

The time period for reply, if any, is set in the attached communication.

UNITED STATES PATENT AND TRADEMARK OFFICE

Commissioner for Patents
United States Patent and Trademark Office
P.O. Box 1450
Alexandria, VA 22313-1450
www.uspto.gov

PATENT PROSECUTION
O2MIRCO , INC.
3118 PATRICK HENRY DRIVE
SANTA CLARA CA 95054

In re Application of	:	
LIN et al.	:	DECISION ON PETITION
Application No. 12/915,807	:	TO MAKE SPECIAL UNDER
Filed: October 29, 2010	:	THE GREEN TECHNOLOGY
Attorney Docket No. 0707	:	PILOT PROGRAM

This is a decision on the petition under 37 CFR 1.102, filed on December 13, 2010, to make the above-identified application special under the pilot program for applications pertaining to Green Technologies as set forth 74 Federal Register Notice 64666 (December 8, 2009) and amended by 75 Federal Register Notice 28554 (May 21, 2010) and 75 Federal Register Notice 69049 (November 10, 2010).

The petition is **GRANTED**.

A grantable petition to make an application special under 37 CFR 1.102 and the pilot program as set forth in 74 FR 64666 must be directed to a nonprovisional application filed under 35 USC 111(a) or be a national stage entry under 35 USC 371, exclusive of any reissue applications.

In order to qualify for special status, the following requirements must be met. 1) The application must have no more than 3 independent claims and no more than 20 total claims. 2) The application must not contain any multiple dependent claims. 3) The petition must state the basis for seeking special status, i.e., the claimed invention either: A) materially enhances the quality of the environment or B) materially contributes to: i) the discovery or development of renewable energy resources, ii) the more efficient utilization and conservation of energy resources, or iii) greenhouse gas emission reduction. 4) If the disclosure is not clear on its face that the claimed invention materially contributes under category (A) or (B), the petition must be accompanied by a statement by the applicant, assignee, or an attorney/agent registered to practice before the Office explaining how the materiality standard is met. 5) A statement that applicant will agree to make an election without traverse in a telephonic interview if a restriction requirement is made by the examiner. 6) The petition to make special must be filed electronically. 7) The petition must be filed at least one day prior to the date that a first Office Action appears in the Patent Application Information Retrieval (PAIR) system. 8) The petition must be accompanied by a request for early publication in compliance with 37 CFR 1.219 and include the publication fee as set forth in 37 CFR 1.18(d).

The requirement for a fee for consideration of the petition to make special for applications pertaining to Green Technologies has been waived.

The instant petition complies with items 1 – 8 above. Accordingly, the above-identified application has been accorded "special" status.

Telephone inquires concerning this decision should be directed to Lee W. Young at 571-272-4549.

The application is being forwarded to the Technology Center Art Unit 2821 for action in its regular turn.

Lee W. Young
Quality Assurance Specialist
Technology Center 2800

UNITED STATES PATENT AND TRADEMARK OFFICE

Commissioner for Patents
United States Patent and Trademark Office
P.O. Box 1450
Alexandria, VA 22313-1450
www.uspto.gov

PATENT PROSECUTION
O2MIRCO , INC.
3118 PATRICK HENRY DRIVE
SANTA CLARA CA 95054

MAILED
APR 02 2012
OFFICE OF PETITIONS

In re Application of	:	
Yung Lin Lin, et al.	:	
Application No. 12/915,807	:	DECISION GRANTING PETITION
Filed: October 29, 2010	:	UNDER 37 CFR 1.313(c)(2)
Attorney Docket No. 0707	:	

This is a decision on the petition under 37 CFR 1.313(c)(2), filed, March 30, 2012 to withdraw the above-identified application from issue after payment of the issue fee.

The petition is **GRANTED**.

The above-identified application is withdrawn from issue for consideration of a submission under 37 CFR 1.114 (request for continued examination). *See* 37 CFR 1.313(c)(2).

Petitioner is advised that the issue fee paid on February 24, 2012 cannot be refunded. If, however, this application is again allowed, petitioner may request that it be applied towards the issue fee required by the new Notice of Allowance.[1]

Telephone inquiries should be directed to Terri Johnson at (571) 272-2991.

This application is being referred to Technology Center AU 2821 for processing of the request for continued examination under 37 CFR 1.114 and for consideration of the concurrently filed information disclosure statement.

/Terri Johnson/
Terri Johnson
Petitions Examiner
Office of Petitions

---

[1] *The request to apply the issue fee to the new Notice may be satisfied by completing and returning the new Part B – Fee(s) Transmittal Form (along with any balance due at the time of submission). Petitioner is advised that the Issue Fee Transmittal Form must be completed and timely submitted to avoid abandonment of the application.*

SPE RESPONSE FOR CERTIFICATE OF CORRECTION

DATE : 03-10-12

TO SPE OF : ART UNIT 2185

SUBJECT : Request for Certificate of Correction for Appl. No.: 12/915824 Patent No.: 8099552

CofC mailroom date: 02-27-12

Please respond to this request for a certificate of correction within 7 days.

FOR IFW FILES:

Please review the requested changes/corrections as shown in the **COCIN** document(s) in the IFW application image. No new matter should be introduced, nor should the scope or meaning of the claims be changed.

Please complete the response (see below) and forward the completed response to scanning using document code **COCX**.

FOR PAPER FILES:

Please review the requested changes/corrections as shown in the attached certificate of correction. Please complete this form (see below) and forward it with the file to:

Certificates of Correction Branch (CofC)
Randolph Square – 9D10-A
Palm Location 7580

Note: _____

_____

Angela Green 571.272.9005
CofC Branch 703-756-1814

Thank You For Your Assistance

The request for issuing the above-identified correction(s) is hereby:
Note your decision on the appropriate box.

- ☒ **Approved** — **All** changes apply.
- ☐ **Approved in Part** — Specify below which changes **do not** apply.
- ☐ **Denied** — State the reasons for denial below.

Comments: _____

SPE SANJIV SHAH **Art Unit** 2185

Doc Code: PET.GREEN
Document Description: Petition for Green Tech Pilot

PTO/SB/420 (05-10)
Approved for use through 05/31/2010. OMB 0651-0062
U.S. Patent and Trademark Office; U. S. DEPARTMENT OF COMMERCE
Under the Paperwork Reduction Act of 1995, no persons are required to respond to a collection of information unless it displays a valid OMB control number.

PETITION TO MAKE SPECIAL UNDER THE GREEN TECHNOLOGY PILOT PROGRAM

Attorney Docket Number: 8736.407.00	Application Number (if known): 12/915,825	Filing date: October 29, 2010

First Named Inventor: Taeho Moon

Title: THIN FILM SOLAR CELL MODULE

APPLICANT HEREBY REQUESTS TO PARTICIPATE IN THE GREEN TECHNOLOGY PILOT PROGRAM FOR THE ABOVE-IDENTIFIED APPLICATION. See Instruction Sheet on page 2.

This petition must be timely filed electronically using the USPTO electronic filing system, EFS-Web.

1. By filing this petition:

   Applicant is requesting early publication: Applicant hereby requests early publication under 37 CFR 1.219 and the publication fee set forth in 37 CFR 1.18(d) accompanies this request.

2. By filing this petition: applicant is agreeing to make an election without traverse in a telephonic interview and elect an invention that meets the eligibility requirements set forth in the notice titled "Pilot Program for Green Technologies Including Greenhouse Gas Reduction," as modified by the notice titled "Elimination of Classification Requirement in the Green Technology Pilot Program," each of which was published in the Federal Register, if the Office determines that the claims are not obviously directed to a single invention.

3. This request is accompanied by statements of special status for the eligibility requirement.

4. The application contains no more than three (3) independent claims and twenty (20) total claims.

5. The application does not contain any multiple dependent claims.

6. Other attachments: _____

Signature	Date December 10, 2010
Name (Print/Typed) Michael P. Alexander	Registration Number 50,961

Note: *Signatures of all the inventors or assignees of record of the entire interest or their representative(s) are required in accordance with 37 CFR 1.33 and 11.18. Please see 37 CFR 1.4(d) for the form of the signature. If necessary, submit multiple forms for more than one signature, see below*.*

☑ *Total of 2 forms are submitted.

The information is required to obtain or retain a benefit by the public which is to file (and by the USPTO to process) an application. Confidentiality is governed by 35 U.S.C. 122 and 37 CFR 1.11 and 1.14. This collection is estimated to take 12 hours to complete, including gathering, preparing, and submitting the completed application form to the USPTO. Time will vary depending upon the individual case. Any comments on the amount of time you require to complete this form and/or suggestions for reducing this burden, should be sent to the Chief Information Officer, U.S. Patent and Trademark Office, U.S. Department of Commerce, P.O. Box 1450, Alexandria, VA 22313-1450. DO NOT SEND FEES OR COMPLETED FORMS TO THIS ADDRESS. **SEND TO: Commissioner for Patents, P.O. Box 1450, Alexandria, VA 22313-1450.**

If you need assistance in completing the form, call 1-800-PTO-9199 and select option 2.

UNITED STATES PATENT AND TRADEMARK OFFICE

UNITED STATES DEPARTMENT OF COMMERCE
United States Patent and Trademark Office
Address: COMMISSIONER FOR PATENTS
P.O. Box 1450
Alexandria, Virginia 22313-1450
www.uspto.gov

APPLICATION NO.	FILING DATE	FIRST NAMED INVENTOR	ATTORNEY DOCKET NO.	CONFIRMATION NO.
12/915,825	10/29/2010	Tacho MOON	8736.407.00	8388

30827 7590 12/22/2010
MCKENNA LONG & ALDRIDGE LLP
1900 K STREET, NW
WASHINGTON, DC 20006

EXAMINER

ART UNIT	PAPER NUMBER
1725	

MAIL DATE	DELIVERY MODE
12/22/2010	PAPER

Please find below and/or attached an Office communication concerning this application or proceeding.

The time period for reply, if any, is set in the attached communication.

UNITED STATES PATENT AND TRADEMARK OFFICE

Commissioner for Patents
United States Patent and Trademark Office
P.O. Box 1450
Alexandria, VA 22313-1450
www.uspto.gov

DEC 2 2 2010

MCKENNA LONG & ALDRIDGE LLP
1900 K STREET, NW
WASHINGTON DC 20006

In re Application of	:	
Taeho Moon et al.	:	DECISION ON PETITION
Application No. 12/915,825	:	TO MAKE SPECIAL UNDER
Filed: October 29, 2010	:	THE GREEN TECHNOLOGY
Attorney Docket No. 8736.407.00	:	PILOT PROGRAM

This is a decision on the petition under 37 CFR 1.102, filed December 10, 2010, to make the above-identified application special under the pilot program for applications pertaining to Green Technologies as set forth in 74 Federal Register Notice 64666 (December 8, 2009) and amended by 75 Federal Register Notice 28554 (May 21, 2010) and 75 Federal Register Notice 69049 (November 10, 2010).

The petition is **GRANTED**.

A grantable petition to make an application special under 37 CFR 1.102 and the pilot program as set forth in 74 FR 64666 must be directed to a nonprovisional application filed under 35 USC 111(a) or be a national stage entry under 35 USC 371, exclusive of any reissue applications.

In order to qualify for special status, the following requirements must be met. 1) The application must have no more than 3 independent claims and no more than 20 total claims. 2) The application must not contain any multiple dependent claims. 3) The petition must state the basis for seeking special status, i.e., the claimed invention either: A) materially enhances the quality of the environment or B) materially contributes to: i) the discovery or development of renewable energy resources, ii) the more efficient utilization and conservation of energy resources, or iii) greenhouse gas emission reduction. 4) If the disclosure is not clear on its face that the claimed invention materially contributes under category (A) or (B), the petition must be accompanied by a statement by the applicant, assignee, or an attorney/agent registered to practice before the Office explaining how the materiality standard is met. 5) A statement that applicant will agree to make an election without traverse in a telephonic interview if a restriction requirement is made by the examiner. 6) The petition to make special must be filed electronically. 7) The petition must be filed at least one day prior to the date that a first Office Action appears in the Patent Application Information Retrieval (PAIR) system. 8) The petition must be accompanied by a request for early publication in compliance with 37 CFR 1.219 and include the publication fee as set forth in 37 CFR 1.18(d).

The requirement for a fee for consideration of the petition to make special for applications pertaining to Green Technologies has been waived.

The instant petition complies with items 1 – 8 above. Accordingly, the above-identified application has been accorded "special" status.

Telephone inquires concerning this decision should be directed to Blaine Copenheaver at 571-272-1156.

The application is being forwarded to the examiner for action on the merits commensurate with this decision.

/Blaine Copenheaver/

Blaine Copenheaver
Quality Assurance Specialist
Technology Center 1700

UNITED STATES PATENT AND TRADEMARK OFFICE

Commissioner for Patents
United States Patent and Trademark Office
P.O. Box 1450
Alexandria, VA 22313-1450
www.uspto.gov

Patent Docket Department
Armstrong Teasdale LLP
7700 Forsyth Boulevard
Suite 1800
St. Louis, MO 63105

MAILED
DEC 02 2011
OFFICE OF PETITIONS

In re Application of Graham et al.	:	
Application No. 12/915,862	:	
Filing Date: October 29, 2010	:	Decision on Request
Attorney Docket No. 80006-985	:	
Pub. No.: US 2011/0105290 A1	:	
Pub. Date: May 5, 2011	:	

This is a decision on the request for a corrected patent application publication under 37 C.F.R. § 1.221(b) filed June 15, 2011.

The request is **dismissed**.

Applicants request the application be republished because of the mistake in the patent application publication identified in the request.

37 C.F.R. § 1.221(b) states,

> [Relief under 37 C.F.R. § 1.221 is warranted] only when the Office makes a material mistake which is apparent from Office records.... Any request for corrected publication or revised patent application publication other than provided in paragraph (a) of this section must be filed within two months from the date of the patent application publication. This period is not extendable.

A mistake is only a "material" mistake if the mistake affects the public's ability to appreciate the technical disclosure of the patent application publication, determine the scope of the patent application publication, or determine the scope of the provisional rights that an applicant may seek to enforce upon issuance of a patent.[1]

[1] *See* Changes to Implement Eighteen-Month Publication of Patent Applications; Final Rule, 65 Fed. Reg. 57023, 57038 (Sept. 20, 2000), 1239 Off. Gaz. Pat. Office 63, 75 (Oct. 10, 2000). *See also* Section 1130 of the Manual of Patent Examining Procedure (8th ed., Rev. 8, July 2010).

The mistake identified in the instant request is not a material Office mistake as required under 37 C.F.R. § 1.221(b). Specifically, the mistake does not affect the public's ability to appreciate the technical disclosure of the patent application publication, determine the scope of the patent application publication, or determine the scope of the provisional rights that an applicant may seek to enforce upon issuance of a patent. *See* MPEP § 1130(B). Therefore, relief under 37 C.F.R. § 1.221(b) is unwarranted and the request is dismissed.

Applicants are advised that a "request for republication of an application previously published" may be filed under 37 C.F.R. § 1.221(a). The request must include a copy of the application, which complies with the Office's electronic filing system requirements set forth in 37 C.F.R. § 1.18(d), and the required processing fee set forth in 37 C.F.R. § 1.17(i).

If the request for republication does not comply with the electronic filing system requirements, the republication will not take place and the publication fee set forth in 37 C.F.R. § 1.18(d) will be refunded. However, the processing fee will be retained.

Guidance for filing a request for a Pre-Grant Publication, such as a request for republication, may be found at the links below:

http://www.uspto.gov/patents/process/file/efs/guidance/index.jsp

http://www.uspto.gov/ebc/portal/efs/pgpub_quickstart.pdf

Any request for republication under 37 C.F.R. § 1.221(a), must be submitted via the EFS system as a "Pre-Grant Publication" and questions or any request for reconsideration of the instant decision should be addressed as follows:

By mail to: Mail Stop PGPUB
Commissioner for Patents
P.O. Box 1450
Alexandria, Va. 22313-1450

Telephone inquiries regarding this communication should be directed to Senior Petitions Attorney Steven Brantley at (571) 272-3203.

Christopher Bottorff
Petitions Examiner
Office of Petitions

UNITED STATES PATENT AND TRADEMARK OFFICE

UNITED STATES DEPARTMENT OF COMMERCE
United States Patent and Trademark Office
Address: COMMISSIONER FOR PATENTS
P.O. Box 1450
Alexandria, Virginia 22313-1450
www.uspto.gov

APPLICATION NO.	FILING DATE	FIRST NAMED INVENTOR	ATTORNEY DOCKET NO.	CONFIRMATION NO.
12/915,870	10/29/2010	Michael T. Ozog	028079.0101N1US	8460

32042 7590 01/31/2011
PATTON BOGGS LLP
8484 WESTPARK DRIVE
SUITE 900
MCLEAN, VA 22102

EXAMINER
BORISSOV, IGOR N

ART UNIT	PAPER NUMBER
3628	

MAIL DATE	DELIVERY MODE
01/31/2011	PAPER

Please find below and/or attached an Office communication concerning this application or proceeding.

The time period for reply, if any, is set in the attached communication.

UNITED STATES PATENT AND TRADEMARK OFFICE

Commissioner for Patents
United States Patent and Trademark Office
P.O. Box 1450
Alexandria, VA 22313-1450
www.uspto.gov

JAN 3 1 2011

PATTON BOGGS LLP
8484 WESTPARK DRIVE
SUITE 900
MCLEAN VA 22102

In re application of:	:	**DECISION ON PETITION**
OZOG, Michael T.	:	**TO MAKE SPECIAL FOR**
Application No. 12/915,870	:	**NEW APPLICATION**
Filed: October 29, 2010	:	**UNDER 37 CFR 1.102**
For: OPTIMIZATION OF MICROGRID ENERGY USE AND DISTRIBUTION		

This is a decision on the petition filed on October 29, 2010 to make the above-identified application special for accelerated examination procedure under 37 C.F.R. § 1.102(d).

The petition to make the application special is **DISMISSED**.

REGULATION AND PRACTICE

A grantable petition to make special under 37 C.F.R. § 1.102(d) and pursuant to the "Change to Practice for Petitions in Patent Applications to Make Special and for Accelerated Examination" published in the Federal Register on June 26, 2006 (71 Fed. Reg. 36323), must satisfy the following conditions:

I. Conditions Regarding the Application:

1. the application must be a non-reissue utility or design application filed under 37 CFR 1.111(a);
2. the application, the petition and the required fees must be filed electronically using the USPTO's electronic filing system (EFS), or EFS-web; if not filed electronically, a statement asserting that EFS and EFS-web were not available during the normal business hours.
3. at the time of filing, the application must be complete under 37 CFR 1.51 and in condition for examination;
4. the application must contain three or fewer independent claims and twenty or fewer total claims and the claims must be directed to a single invention.

II. Conditions Regarding the Petition:

The petition must:

1. be filed with the application;

2. include a statement that applicant agrees not to separately argue the patentability of any independent claim during any appeal in the application;

3. include a statement that applicant agrees to make an election without traverse in a telephone interview.

4. include a statement that applicant agrees to conduct such an interview when requested by the examiner.

5. include a statement, made based on a good faith belief, that a preexamination search in compliance with the following requirements, was conducted, including an identification of the field of search by United States class and subclass, where applicable, and for database searches, the search logic or chemical structure or sequence used as a query, the name of the file(s) searched and the database service, and the date of the search.

The preexamination search must:

5.1 involve U.S. patents and patent application publications, foreign patent documents, and non-patent literature, unless the applicant can justify with reasonable certainty that no references more pertinent than those already identified are likely to be found in the eliminated sources and includes such a justification with this statement;

5.2. be directed to the claimed invention and encompass all of the features of the claims, giving the claims the broadest reasonable interpretation;

5.3. encompass the disclosed features that may be claimed.

6. must provide in support of the petition an accelerated examination support document.

An accelerated examination support document must include:

6.1. an information disclosure statement (IDS) in compliance with 37 CFR 1.98 citing each reference deemed most closely related to the subject matter of each of the claims;

6.2. an identification of all the limitations in the claims that are disclosed by the reference specifying where the limitation is disclosed in the cited reference;

6.3. a detailed explanation of how each of the claims is patentable over the references cited with particularity required by 37 CFR 1.111(b) and (c);

6.4. a concise statement of the utility of the invention as defined in each of the independent claims (unless the application is a design application);

6.5. a showing of where each limitation of the claims finds support under 35 USC 112, first paragraph, in the written description of the specification. If applicable, the showing must also identify: (1) each means- (or step) plus-function claim element that invokes consideration under 35 USC 112, sixth paragraph; and (2) the structure, material, or acts in the specification that corresponds to each means- (or step) plus-function claim element that invokes consideration under 35 USC 112, sixth paragraph; if the application claims the benefit of one or more applications

under title 35, United States Code, the showing must also include where each limitation of the claims finds support under 35 USC 112, first paragraph, in each such application in which such supports exists;

6.6. an identification of any cited references that may be disqualified under 35 USC 103(c).

REVIEW OF FACTS

The petition in this case fails to comply with Conditions II.5, II.5.2, and II.6.5.

As to Condition II.5, as this case is classified in Class 705/7, a US classification search should be performed at least in the area that the application is classified. The only classification search listed in the Search Document was performed in Class 700. Further, applicant's attention is directed to the search template of relevant search areas, including non-patent literature sources, found here for cases classified in Class 705:
http://www.uspto.gov/web/patents/searchtemplates/class705.htm

As to Condition II.5.2, the recorded searches in several non-patent literature sources do not encompass "all of the features of the claims" and thus are incomplete. Particularly in light of its assertion as a patentable feature in the Support Document at e.g. page 167, the "cost of service" or "avoided cost" feature should be thoroughly searched in all sources. Applicant further asserts that the dependent claims add further features that are separately patentable at page 177 of the Support Document. Note for example the specific optimization features of instant claims 6-12, such as maximizing revenue, minimizing discomfort, minimizing peak demand, minimizing renewable generation volatility, which were not thoroughly searched in all sources. Although the terms "optimize or optimization" appear in the searches, the presence or absence of this single generic term in a document does not necessarily reflect on the presence or absence of these specific concepts and synonyms for optimization. The search must be directed to all the features of the claims.

As to Condition II.6.5, while applicant has done a thorough job in indicating support within the current application for the claimed features, this application also claims benefit of parent application 12/687,827 which claims benefit to two provisional applications 61/144,642 and 61/228,010. The Support Document does not show where each limitation of the claims finds support under 35 USC 112,1st paragraph for the parent and provision applications to which benefit is claimed.

DECISION

For the above stated reasons, the petition is **DISMISSED**. The application will therefore be taken up by the examiner for action in its regular turn.

Petitioner is given a single opportunity to perfect the petition. Any request for reconsideration of this decision must be submitted within one (1) month or thirty (30) days, whichever is longer, from the date of this decision. No extensions of time will be granted under 37 CFR 1.136(a) if the request is to be considered timely. Any request for reconsideration must address the deficiencies indicated above.

Petitioner is reminded that, upon granting of the special status of the application on request for reconsideration, the application will be processed expeditiously. However, due to the dismissal of the instant petition, examination may not be completed within twelve months of the filing date of the application.

Any inquiry regarding this decision should be directed to Robert Weinhardt, Business Practice Specialist, at (571) 272-6633.

Robert A. Weinhardt,
Business Practice Specialist
Technology Center 3600

RW/1/29/11

UNITED STATES PATENT AND TRADEMARK OFFICE

UNITED STATES DEPARTMENT OF COMMERCE
United States Patent and Trademark Office
Address: COMMISSIONER FOR PATENTS
P.O. Box 1450
Alexandria, Virginia 22313-1450
www.uspto.gov

APPLICATION NO.	FILING DATE	FIRST NAMED INVENTOR	ATTORNEY DOCKET NO.	CONFIRMATION NO.
12/915,870	10/29/2010	Michael T. Ozog	028079.0101N1US	8460

32042 7590 02/28/2011
PATTON BOGGS LLP
8484 WESTPARK DRIVE
SUITE 900
MCLEAN, VA 22102

EXAMINER
BORISSOV, IGOR N

ART UNIT	PAPER NUMBER
3628	

MAIL DATE	DELIVERY MODE
02/28/2011	PAPER

Please find below and/or attached an Office communication concerning this application or proceeding.

The time period for reply, if any, is set in the attached communication.

UNITED STATES PATENT AND TRADEMARK OFFICE

FEB 2 8 2011

Commissioner for Patents
United States Patent and Trademark Office
P.O. Box 1450
Alexandria, VA 22313-1450
www.uspto.gov

PATTON BOGGS LLP
8484 WESTPARK DRIVE
SUITE 900
MCLEAN VA 22102

In re application of: OZOG, Michael T. Application No. 12/915,870 Filed: October 29, 2010 For: OPTIMIZATION OF MICROGRID ENERGY USE AND DISTRIBUTION	: : : :	**DECISION ON PETITION TO MAKE SPECIAL FOR NEW APPLICATION UNDER 37 CFR 1.102**

This is a decision on the petition filed on October 29, 2010 and the substitute Accelerated Examination Search and Support documents filed February 22, 2011 to make the above-identified application special for accelerated examination procedure under 37 C.F.R. § 1.102(d).

The petition to make the application special is **GRANTED**.

The application is eligible for accelerated examination and the petition complies with the conditions for granting the application special status pursuant to the "Change to Practice for Petitions in Patent Applications to Make Special and for Accelerated Examination" published June 26, 2006, in the Federal Register. (71 Fed. Reg. 36323).

The prosecution of the instant application will be conducted expeditiously according to the following guidelines.

1. The application will be docketed to an examiner and taken up for action within two weeks of the date of this decision.

2. Restriction Practice:
   If the examiner determines that the claims are not directed to a single invention, a telephone request to elect one single invention will be made pursuant to MPEP 812.01. As a prerequisite to the grant of this petition, the applicant has agreed to make an oral election, by telephone, without traverse. If the applicant refuses to make an election without traverse, or the examiner cannot reach

the applicant after a reasonable effort, the examiner will treat the first claimed invention (invention defined by claim 1) as having being constructively elected without traverse for examination.

3. Office action:
   If it is determined that, after appropriate consultation, there is a potential rejection or any other issue to be addressed, the examiner will telephone the applicant and arrange an interview to discuss and resolve the issue. An Office action, other than a Notice of Allowance and Fee(s) Due (Notice of Allowance), will not be issued unless either: 1) an interview was conducted but did not result in agreed to action that places the application in condition for allowance, or, 2) a determination is made that an interview would be unlikely to result in the application being placed in condition for allowance, and 3) an internal conference has been held to review any rejection of any claim.

4. Time for Reply:
   An Office action other than a Notice of Allowance or a final Office action will set a shortened statutory period of one month or thirty days, whichever is longer, for reply with no extension of time available under 37 CFR 1.136(a). Failure to timely file a reply within this non-extendible period for reply will result in the abandonment of the application.

5. Reply by Applicant:
   A timely reply to an Office action other than the Notice of Allowance must be submitted electronically via EFS or EFS-web and limited to addressing the rejections, objections and requirement made. Any amendment that attempts to: 1) add claims which would result in more than three pending independent claims or more than twenty pending total claims; 2) present claims not encompassed by the pre-examination search or an updated accelerated examination support document; or 3) present claims that are directed to a non-elected invention or an invention other than that previously claimed and examined in the application, will be treated as not fully responsive and will not be entered.

   For any amendment to the claims (including any new claim) that is not encompassed by the accelerated examination support document, applicant must provide an updated accelerated examination support document that encompasses the amended or new claims at the time of filing of the amendment.

   To proceed expeditiously with the examination, it is recommended that a reply with amendments made to any claim or with any new

claim being added be accompanied by an updated accelerated examination support document or a statement explaining how the amended or new claim is supported by the original accelerated examination support document.

6. Information Disclosure Statement (IDS):
   Any IDS filed during prosecution must be submitted electronically via EFS or EFS-web, accompanied by an updated accelerated examination support document, and be in compliance with 37 CFR 1.97 and 1.98.

7. Post-Allowance Processing:
   To expedite processing of the allowed application into a patent, the applicant must: 1) pay the required fees within one month of the date of the Notice of Allowance, and 2) not file any post allowance papers not required by the Office. In no event may the issue fee be paid and accepted later than three months from the date of the Notice of Allowance.

8. After-Final and Appeal Procedures:
   To expedite prosecution, after receiving the final Office action, applicant must: 1) promptly file a notice of appeal, an appeal brief and appeal fees; and 2) not request a pre-appeal brief conference.

   Any amendment, affidavit or other evidence filed after final Office action must comply with applicable rules and the requirements outlined in numbered paragraphs 5 and 6 above.

   On appeal, the application will proceed according to normal appeal procedures. After appeal, the application will again be treated special.

9. Proceedings Outside the Normal Examination Process:
   If the application becomes involved in a proceeding that is outside the normal examination process (e.g., a secrecy order, national security review, interference proceeding, petitions under 37 CFR 1.181, 182 or 183), the application will be treated special before and after such proceeding.

10. Final Disposition:
    The twelve month goal of this accelerated examination procedure ends with a final disposition. The mailing of a final Office action, a Notice of Allowance, the filing of a Notice of Appeal, or the filing of a Request for Continued Examination (RCE) is the final disposition.

If, during prosecution, a paper is not filed electronically using EFS-web, a reply is filed but is not fully responsive, the application is involved in an appeal, or a proceeding outside normal examination process, the application will still be examined expeditiously, however, the final disposition may occur more than twelve months from the filing of the application.

Any inquiry regarding this decision should be directed to Robert Weinhardt, Business Practice Specialist, at (571) 272-6633.

Robert Weinhardt
Business Practice Specialist
Technology Center 3600

RW/2/25/11

AE PROCESSING

☐ **DISMISSAL**

DOC CODE: **PETDEC (Orange sheet)**

PALM: **DISMISSED**

☐ **DENIAL**

DOC CODE: **PETDEC (Orange sheet)**

PALM: **DENIED**
AEOV

☒ **GRANT**

DOC CODE: **PETDEC (Orange sheet)**

PALM: **GRANTED**

☐ **COMMUNICATION**

DOC CODE: **M327 (Orange sheet).**

PALM: **1380 Transaction (Misc. Letter Count)**
Mail Transaction
AEOV

PALM PETITON CODE IS 646
SCAN ALL OUTGOING PAPERS
DATE STAMP ALL OUTGOING PAPERS

Doc Code: PET.GREEN
Document Description: Petition for Green Tech Pilot

PTO/SB/420 (05-10)
Approved for use through 05/31/2010. OMB 0651-0062
U.S. Patent and Trademark Office; U. S. DEPARTMENT OF COMMERCE
Under the Paperwork Reduction Act of 1995, no persons are required to respond to a collection of information unless it displays a valid OMB control number.

PETITION TO MAKE SPECIAL UNDER THE GREEN TECHNOLOGY PILOT PROGRAM

Attorney Docket Number: ID0238US	Application Number (if known): 12/915,872	Filing date: October 29, 2010

First Named Inventor: Maria Magdalena Ramirez Corredores, et al

Title: PRODUCTION OF RENEWABLE BIO-DISTILLATE

APPLICANT HEREBY REQUESTS TO PARTICIPATE IN THE GREEN TECHNOLOGY PILOT PROGRAM FOR THE ABOVE-IDENTIFIED APPLICATION. See Instruction Sheet on page 2.

This petition must be timely filed electronically using the USPTO electronic filing system, EFS-Web.

1. By filing this petition:

   Applicant is requesting early publication: Applicant hereby requests early publication under 37 CFR 1.219 and the publication fee set forth in 37 CFR 1.18(d) accompanies this request.

2. By filing this petition: applicant is agreeing to make an election without traverse in a telephonic interview and elect an invention that meets the eligibility requirements set forth in the notice titled "Pilot Program for Green Technologies Including Greenhouse Gas Reduction," as modified by the notice titled "Elimination of Classification Requirement in the Green Technology Pilot Program," each of which was published in the Federal Register, if the Office determines that the claims are not obviously directed to a single invention.

3. This request is accompanied by statements of special status for the eligibility requirement.

4. The application contains no more than three (3) independent claims and twenty (20) total claims.

5. The application does not contain any multiple dependent claims.

6. Other attachments: _____

Signature /jra/	Date January 24, 2011
Name (Print/Typed) Jeffrey R. Anderson	Registration Number 42,263

***Note**: Signatures of all the inventors or assignees of record of the entire interest or their representative(s) are required in accordance with 37 CFR 1.33 and 11.18. Please see 37 CFR 1.4(d) for the form of the signature. If necessary, submit multiple forms for more than one signature, see below*.*

☐ *Total of _____ forms are submitted.

The information is required to obtain or retain a benefit by the public which is to file (and by the USPTO to process) an application. Confidentiality is governed by 35 U.S.C. 122 and 37 CFR 1.11 and 1.14. This collection is estimated to take 12 hours to complete, including gathering, preparing, and submitting the completed application form to the USPTO. Time will vary depending upon the individual case. Any comments on the amount of time you require to complete this form and/or suggestions for reducing this burden, should be sent to the Chief Information Officer, U.S. Patent and Trademark Office, U.S. Department of Commerce, P.O. Box 1450, Alexandria, VA 22313-1450. DO NOT SEND FEES OR COMPLETED FORMS TO THIS ADDRESS. **SEND TO: Commissioner for Patents, P.O. Box 1450, Alexandria, VA 22313-1450.**

If you need assistance in completing the form, call 1-800-PTO-9199 and select option 2.

Under the Paperwork Reduction Act of 1995, no persons are required to respond to a collection of information unless it displays a valid OMB control number.

Instruction Sheet for Petition to Make Special Under the Green Technology Pilot Program

(Not to be Submitted to the USPTO)

The following is a summary of the requirements (for more information see the notices (i) "Pilot Program for Green Technologies Including Greenhouse Gas Reduction" and (ii) "Elimination of Classification Requirement in the Green Technology Pilot Program," available on the USPTO web site at http://www.uspto.gov/patents/init_events/green_tech.jsp):

(1) The application must be a non-reissue, non-provisional utility application filed under 35 U.S.C. 111(a), or an international application that has entered the national stage in compliance with 35 U.S.C. 371. The application must be previously filed before the publication date of the notice cited above. Reexamination proceedings are excluded from this pilot program.

(2) The application must contain three or fewer independent claims and twenty or fewer total claims. The application must not contain any multiple dependent claims. For an application that contains more than three independent claims or twenty total claims, or multiple dependent claims, applicant must file a preliminary amendment in compliance with 37 CFR 1.121 to cancel the excess claims and/or the multiple dependent claims at the time the petition to make special is filed.

(3) The claims must be directed to a single invention that materially enhances the quality of the environment, or that materially contributes to: (1) the discovery or development of renewable energy resources; (2) the more efficient utilization and conservation of energy resources; or (3) green house gas emission reduction (see the eligibility requirements of sections II and III of the notice (i) cited above). The petition must include a statement that, if the USPTO determines that the claims are directed to multiple inventions (e.g., in a restriction requirement), applicant will agree to make an election without traverse in a telephonic interview, and elect an invention that meets the eligibility requirements in section II or III of the notice (i) cited above.

(4) The petition to make special must be timely filed electronically using the USPTO electronic filing system, EFS-Web, and selecting the document description of "Petition for Green Tech Pilot" on the EFS-Web screen. Applicant should use form PTO/SB/420, which is available as a Portable Document Format (PDF) fillable form in EFS-Web and on the USPTO Web site.

(5) The petition to make special must be filed at least one day prior to the date that a first Office action (which may be an Office action containing only a restriction requirement) appears in the Patent Application Information Retrieval (PAIR) system. Applicant may check the status of the application using PAIR.

(6) The petition to make special must be accompanied by a request for early publication in compliance with 37 CFR 1.219 and the publication fee set forth in 37 CFR 1.18(d).

Privacy Act Statement

The **Privacy Act of 1974 (P.L. 93-579)** requires that you be given certain information in connection with your submission of the attached form related to a patent application or patent. Accordingly, pursuant to the requirements of the Act, please be advised that: (1) the general authority for the collection of this information is 35 U.S.C. 2(b)(2); (2) furnishing of the information solicited is voluntary; and (3) the principal purpose for which the information is used by the U.S. Patent and Trademark Office is to process and/or examine your submission related to a patent application or patent. If you do not furnish the requested information, the U.S. Patent and Trademark Office may not be able to process and/or examine your submission, which may result in termination of proceedings or abandonment of the application or expiration of the patent.

The information provided by you in this form will be subject to the following routine uses:

1. The information on this form will be treated confidentially to the extent allowed under the Freedom of Information Act (5 U.S.C. 552) and the Privacy Act (5 U.S.C 552a). Records from this system of records may be disclosed to the Department of Justice to determine whether disclosure of these records is required by the Freedom of Information Act.
2. A record from this system of records may be disclosed, as a routine use, in the course of presenting evidence to a court, magistrate, or administrative tribunal, including disclosures to opposing counsel in the course of settlement negotiations.
3. A record in this system of records may be disclosed, as a routine use, to a Member of Congress submitting a request involving an individual, to whom the record pertains, when the individual has requested assistance from the Member with respect to the subject matter of the record.
4. A record in this system of records may be disclosed, as a routine use, to a contractor of the Agency having need for the information in order to perform a contract. Recipients of information shall be required to comply with the requirements of the Privacy Act of 1974, as amended, pursuant to 5 U.S.C. 552a(m).
5. A record related to an International Application filed under the Patent Cooperation Treaty in this system of records may be disclosed, as a routine use, to the International Bureau of the World Intellectual Property Organization, pursuant to the Patent Cooperation Treaty.
6. A record in this system of records may be disclosed, as a routine use, to another federal agency for purposes of National Security review (35 U.S.C. 181) and for review pursuant to the Atomic Energy Act (42 U.S.C. 218(c)).
7. A record from this system of records may be disclosed, as a routine use, to the Administrator, General Services, or his/her designee, during an inspection of records conducted by GSA as part of that agency's responsibility to recommend improvements in records management practices and programs, under authority of 44 U.S.C. 2904 and 2906. Such disclosure shall be made in accordance with the GSA regulations governing inspection of records for this purpose, and any other relevant (*i.e.*, GSA or Commerce) directive. Such disclosure shall not be used to make determinations about individuals.
8. A record from this system of records may be disclosed, as a routine use, to the public after either publication of the application pursuant to 35 U.S.C. 122(b) or issuance of a patent pursuant to 35 U.S.C. 151. Further, a record may be disclosed, subject to the limitations of 37 CFR 1.14, as a routine use, to the public if the record was filed in an application which became abandoned or in which the proceedings were terminated and which application is referenced by either a published application, an application open to public inspection or an issued patent.
9. A record from this system of records may be disclosed, as a routine use, to a Federal, State, or local law enforcement agency, if the USPTO becomes aware of a violation or potential violation of law or regulation.

UNITED STATES PATENT AND TRADEMARK OFFICE

UNITED STATES DEPARTMENT OF COMMERCE
United States Patent and Trademark Office
Address: COMMISSIONER FOR PATENTS
P.O. Box 1450
Alexandria, Virginia 22313-1450
www.uspto.gov

APPLICATION NO.	FILING DATE	FIRST NAMED INVENTOR	ATTORNEY DOCKET NO.	CONFIRMATION NO.
12/915,872	10/29/2010	Maria Magdalena Ramirez Corredores	ID0238US	8462

90394 7590 11/17/2011
Kior Inc.
13001 Bay Park Rd.
Pasadena, TX 77507

EXAMINER

ART UNIT	PAPER NUMBER
1771	

MAIL DATE	DELIVERY MODE
11/17/2011	PAPER

Please find below and/or attached an Office communication concerning this application or proceeding.

The time period for reply, if any, is set in the attached communication.

UNITED STATES PATENT AND TRADEMARK OFFICE

Commissioner for Patents
United States Patent and Trademark Office
P.O. Box 1450
Alexandria, VA 22313-1450
www.uspto.gov

11/17/2011

Kior Inc.
13001 Bay Park Rd.
Pasadena TX 77507

In re Application of	:	
Ramirez et al.	:	DECISION ON PETITION
Application No. 12/915,872	:	TO MAKE SPECIAL UNDER
Filed: 10/29/2010	:	THE GREEN TECHNOLOGY
Attorney Docket No. **ID0238US**	:	PILOT PROGRAM

This is a decision on the petition under 37 CFR 1.102, filed 1/24/2011, to make the above-identified application special under the pilot program for applications pertaining to Green Technologies as set forth in 74 Federal Register Notice 64666 (December 8, 2009) and amended by 75 Federal Register Notice 28554 (May 21, 2010) and 75 Federal Register Notice 69049 (November 10, 2010).

The petition is **GRANTED**.

A grantable petition to make an application special under 37 CFR 1.102 and the pilot program as set forth in 74 FR 64666 must be directed to a nonprovisional application filed under 35 USC 111(a) or be a national stage entry under 35 USC 371, exclusive of any reissue applications.

In order to qualify for special status, the following requirements must be met. 1) The application must have no more than 3 independent claims and no more than 20 total claims. 2) The application must not contain any multiple dependent claims. 3) The petition must state the basis for seeking special status, i.e., the claimed invention either: A) materially enhances the quality of the environment or B) materially contributes to: i) the discovery or development of renewable energy resources, ii) the more efficient utilization and conservation of energy resources, or iii) greenhouse gas emission reduction. 4) If the disclosure is not clear on its face that the claimed invention materially contributes under category (A) or (B), the petition must be accompanied by a statement by the applicant, assignee, or an attorney/agent registered to practice before the Office explaining how the materiality standard is met. 5) A statement that applicant will agree to make an election without traverse in a telephonic interview if a restriction requirement is made by the examiner. 6) The petition to make special must be filed electronically. 7) The petition must be filed at least one day prior to the date that a first Office Action appears in the Patent Application Information Retrieval (PAIR) system. 8) The petition must be accompanied by a request for early publication in compliance with 37 CFR 1.219 and include the publication fee as set forth in 37 CFR 1.18(d).

The requirement for a fee for consideration of the petition to make special for applications pertaining to Green Technologies has been waived.

The instant petition complies with items 1 – 8 above. Accordingly, the above-identified application has been accorded "special" status.

Telephone inquires concerning this decision should be directed to Tom Dunn at 571-272-1171.

The application is being forwarded to the Technology Center Art Unit 1771 for action on the merits commensurate with this decision.

/Tom Dunn/

Tom Dunn
Quality Assurance Specialist
Technology Center 1700

UNITED STATES PATENT AND TRADEMARK OFFICE

Commissioner for Patents
United States Patent and Trademark Office
P.O. Box 1450
Alexandria, VA 22313-1450
www.uspto.gov

MAILED
NOV 04 2011
OFFICE OF PETITIONS

PROSKAUER ROSE LLP
ONE INTERNATIONAL PLACE
BOSTON MA 02110

Applicant: CHARLES M. FORTMANN
Appl. No.: 12/915,958
Filing Date: October 29, 2010
Title: LIGHT SCATTERING AND TRANSPORT FOR PHOTOSENSITIVE DEVICES
Attorney Docket No.: IST-001
Pub. No.: US 2011/0100423 A1
Pub. Date: May 5, 2011

This is a decision on the request for correction of patent application publication under 37 CFR 1.221(b), received on July 5, 2011, for the above-identified application.

The request is DISMISSED.

Applicant requests that the application be republished because the patent application publication contains an error in claim 1, wherein the word "pen fitting" should be "permitting."

37 CFR 1.221 (b) is applicable "only when the Office makes a material mistake which is apparent from Office records.... Any request for a corrected publication or revised patent application publication other than provided as provided in paragraph (a) of this section must be filed within two months from the date of the patent application publication. This period is not extendable." A material mistake must affect the public's ability to appreciate the technical disclosure of the patent application publication, to determine the scope of the patent application publication, or to determine the scope of the provisional rights that an applicant may seek to enforce upon issuance of a patent. [1]

The error noted by requestor wherein claim 1 is an Office error but is not a material Office error as defined under 37 CFR 1.221(b). In particular, the error does not affect the interpretation of the published claims. See MPEP 1130 B.

The applicant is advised that a "request for republication of an application previously published" may be filed under 37 CFR 1.221(a). Such a request for republication "must include a copy of the application compliance with the Office's electronic filing system requirements and be accompanied by the publication fee set forth in § 1.18(d) and the processing fee set forth in

[1] Changes to Implement Eighteen-Month Publication of Patent Applications, 65 FR 57023, 57038 (Sept. 20, 2000), 1239, Off. Gaz. Pat. Office Notices 63, 75 (Oct. 10, 2000) (final rule).

§ 1.17(i)." If the request for republication does not comply with the electronic filing system requirements, the republication will not take place and the publication fee set forth in § 1.18(d) will be refunded. The processing fee will be retained.

A guide for filing a request for a Pre-Grant Publication, such as a request for republication, may be found on the link below:

http://www.uspto.gov/patents/process/file/efs/guidance/index.jsp

http://www.uspto.gov/ebc/portal/efs/pgpub_quickstart.pdf

Any request for republication under 37 CFR 1.221(a), must be submitted via the EFS system, as a "Pre-Grant Publication".

Inquiries relating to this matter may be directed to Sherry D. Brinkley at (571) 272-3204.

/Christopher Bottorff/

Christopher Bottorff
Petitions Examiner
Office of Petitions

IN THE UNITED STATES PATENT AND TRADEMARK OFFICE

First Named Inventor: Bradley Graham MOORE	)
Confirmation No.: 8844	)
	)
Serial No.: 12/916,063	)
	)
Filing Date: October 29, 2010	)
	)
Atty Docket No.: 246075-1	)

Commissioner for Patents
P.O. Box 1450
Alexandria, VA 22313-1450

Statement Concerning the Basis for the Special Status

SIR:

Applicant respectfully submits that Special Status is sought on the basis that the present invention materially contributes to the development of renewable energy resources or energy conservation.

The undersigned attorney may be contacted at the number below to facilitate the resolution of any matters. Please charge any fees that are incurred in connection with this Statement to deposit account no. 09-0470.

Respectfully submitted,

General Electric Company

By : /Douglas D. Zhang/
Douglas D. Zhang
Reg. No. 37,985

Dated: December 28, 2010

GE Global Patent Operation
2 Corporate Drive, Suite 648
Shelton, CT 06484
203-944-6755

Doc Code: PET.GREEN
Document Description: Petition for Green Tech Pilot

PTO/SB/420 (11-10)
Approved for use through 01/31/2011. OMB 0651-0062
U.S. Patent and Trademark Office; U. S. DEPARTMENT OF COMMERCE
Under the Paperwork Reduction Act of 1995, no persons are required to respond to a collection of information unless it displays a valid OMB control number.

PETITION TO MAKE SPECIAL UNDER THE GREEN TECHNOLOGY PILOT PROGRAM

Attorney Docket Number: 246075-1	Application Number (if known): 12/916,063	Filing date: October 29, 2010
First Named Inventor: Bradley Graham MOORE		
Title: WIND TURBINE PITCH ASSEMBLY ENCLOSURE SYSTEM		

APPLICANT HEREBY REQUESTS TO PARTICIPATE IN THE GREEN TECHNOLOGY PILOT PROGRAM FOR THE ABOVE-IDENTIFIED APPLICATION. See Instruction Sheet on page 2.

This petition must be timely filed electronically using the USPTO electronic filing system, EFS-Web.

1. By filing this petition:

   Applicant is requesting early publication: Applicant hereby requests early publication under 37 CFR 1.219 and the publication fee set forth in 37 CFR 1.18(d) accompanies this request.

2. By filing this petition: applicant is agreeing to make an election without traverse in a telephonic interview and elect an invention that meets the eligibility requirements for the Green Technology Pilot Program, if the Office determines that the claims are not obviously directed to a single invention. See Instruction Sheet.

3. This request is accompanied by statements of special status for the eligibility requirement.

4. The application contains no more than three (3) independent claims and twenty (20) total claims.

5. The application does not contain any multiple dependent claims.

6. Other attachments: Statement Concerning the Basis for the Special Status

Signature /Douglas D. Zhang/	Date December 28, 2010
Name (Print/Typed) Douglas D. Zhang	Registration Number 37,985

Note: *Signatures of all the inventors or assignees of record of the entire interest or their representative(s) are required in accordance with 37 CFR 1.33 and 11.18. Please see 37 CFR 1.4(d) for the form of the signature. If necessary, submit multiple forms for more than one signature see below*.*

☐ *Total of ..... forms are submitted.

The information is required to obtain or retain a benefit by the public which is to file (and by the USPTO to process) an application. Confidentiality is governed by 35 U.S.C. 122 and 37 CFR 1.11 and 1.14. This collection is estimated to take 12 hours to complete, including gathering, preparing, and submitting the completed application form to the USPTO. Time will vary depending upon the individual case. Any comments on the amount of time you require to complete this form and/or suggestions for reducing this burden, should be sent to the Chief Information Officer, U.S. Patent and Trademark Office, U.S. Department of Commerce, P.O. Box 1450, Alexandria, VA 22313-1450. DO NOT SEND FEES OR COMPLETED FORMS TO THIS ADDRESS. **SEND TO: Commissioner for Patents, P.O. Box 1450, Alexandria, VA 22313-1450.**

If you need assistance in completing the form, call 1-800-PTO-9199 and select option 2.

Privacy Act Statement

The **Privacy Act of 1974 (P.L. 93-579)** requires that you be given certain information in connection with your submission of the attached form related to a patent application or patent. Accordingly, pursuant to the requirements of the Act, please be advised that: (1) the general authority for the collection of this information is 35 U.S.C. 2(b)(2); (2) furnishing of the information solicited is voluntary; and (3) the principal purpose for which the information is used by the U.S. Patent and Trademark Office is to process and/or examine your submission related to a patent application or patent. If you do not furnish the requested information, the U.S. Patent and Trademark Office may not be able to process and/or examine your submission, which may result in termination of proceedings or abandonment of the application or expiration of the patent.

The information provided by you in this form will be subject to the following routine uses:

1. The information on this form will be treated confidentially to the extent allowed under the Freedom of Information Act (5 U.S.C. 552) and the Privacy Act (5 U.S.C 552a). Records from this system of records may be disclosed to the Department of Justice to determine whether disclosure of these records is required by the Freedom of Information Act.
2. A record from this system of records may be disclosed, as a routine use, in the course of presenting evidence to a court, magistrate, or administrative tribunal, including disclosures to opposing counsel in the course of settlement negotiations.
3. A record in this system of records may be disclosed, as a routine use, to a Member of Congress submitting a request involving an individual, to whom the record pertains, when the individual has requested assistance from the Member with respect to the subject matter of the record.
4. A record in this system of records may be disclosed, as a routine use, to a contractor of the Agency having need for the information in order to perform a contract. Recipients of information shall be required to comply with the requirements of the Privacy Act of 1974, as amended, pursuant to 5 U.S.C. 552a(m).
5. A record related to an International Application filed under the Patent Cooperation Treaty in this system of records may be disclosed, as a routine use, to the International Bureau of the World Intellectual Property Organization, pursuant to the Patent Cooperation Treaty.
6. A record in this system of records may be disclosed, as a routine use, to another federal agency for purposes of National Security review (35 U.S.C. 181) and for review pursuant to the Atomic Energy Act (42 U.S.C. 218(c)).
7. A record from this system of records may be disclosed, as a routine use, to the Administrator, General Services, or his/her designee, during an inspection of records conducted by GSA as part of that agency's responsibility to recommend improvements in records management practices and programs, under authority of 44 U.S.C. 2904 and 2906. Such disclosure shall be made in accordance with the GSA regulations governing inspection of records for this purpose, and any other relevant (*i.e.*, GSA or Commerce) directive. Such disclosure shall not be used to make determinations about individuals.
8. A record from this system of records may be disclosed, as a routine use, to the public after either publication of the application pursuant to 35 U.S.C. 122(b) or issuance of a patent pursuant to 35 U.S.C. 151. Further, a record may be disclosed, subject to the limitations of 37 CFR 1.14, as a routine use, to the public if the record was filed in an application which became abandoned or in which the proceedings were terminated and which application is referenced by either a published application, an application open to public inspection or an issued patent.
9. A record from this system of records may be disclosed, as a routine use, to a Federal, State, or local law enforcement agency, if the USPTO becomes aware of a violation or potential violation of law or regulation.

UNITED STATES PATENT AND TRADEMARK OFFICE

UNITED STATES DEPARTMENT OF COMMERCE
United States Patent and Trademark Office
Address: COMMISSIONER FOR PATENTS
P.O. Box 1450
Alexandria, Virginia 22313-1450
www.uspto.gov

APPLICATION NO.	FILING DATE	FIRST NAMED INVENTOR	ATTORNEY DOCKET NO.	CONFIRMATION NO.
12/916,063	10/29/2010	Bradley Graham Moore	246075 (22402-239)	8844

45432 7590 01/06/2011
PATRICK W. RASCHE (22402)
ARMSTRONG TEASDALE LLP
7700 Forsyth Boulevard
Suite 1800
St. Louis, MO 63105

EXAMINER

ART UNIT	PAPER NUMBER
3745	

NOTIFICATION DATE	DELIVERY MODE
01/06/2011	ELECTRONIC

Please find below and/or attached an Office communication concerning this application or proceeding.

The time period for reply, if any, is set in the attached communication.

Notice of the Office communication was sent electronically on above-indicated "Notification Date" to the following e-mail address(es):

USpatents@armstrongteasdale.com

UNITED STATES PATENT AND TRADEMARK OFFICE

Commissioner for Patents
United States Patent and Trademark Office
P.O. Box 1450
Alexandria, VA 22313-1450
www.uspto.gov

PATRICK W. RASCHE (22402)
ARMSTRONG TEASDALE LLP
7700 Forsyth Boulevard
Suite 1800
St. Louis MO 63105

In re Application of	:	
MOORE, BRADLEY GRAHAM	:	DECISION ON PETITION
Application No. 12/916,063	:	TO MAKE SPECIAL UNDER
Filed: Oct. 29, 2010	:	THE GREEN TECHNOLOGY
Attorney Docket No. 246075 (22402-239)	:	PILOT PROGRAM

This is a decision on the petition under 37 CFR 1.102, filed Dec. 30, 2010, to make the above-identified application special under the pilot program for applications pertaining to Green Technologies as set forth in 74 Federal Register Notice 64666 (December 8, 2009) and amended by 75 Federal Register Notice 28554 (May 21, 2010) and 75 Federal Register Notice 69049 (November 10, 2010).

The petition is **dismissed**.

A grantable petition to make an application special under 37 CFR 1.102 and the pilot program as set forth in 74 FR 64666 must be directed to a nonprovisional application filed under 35 USC 111(a) or be a national stage entry under 35 USC 371, exclusive of any reissue applications.

In order to qualify for special status, the following requirements must be met. 1) The application must have no more than 3 independent claims and no more than 20 total claims. 2) The application must not contain any multiple dependent claims. 3) The petition must state the basis for seeking special status, i.e., the claimed invention either: A) materially enhances the quality of the environment or B) materially contributes to: i) the discovery or development of renewable energy resources, ii) the more efficient utilization and conservation of energy resources, or iii) greenhouse gas emission reduction. 4) If the disclosure is not clear on its face that the claimed invention materially contributes under category (A) or (B), the petition must be accompanied by a statement by the applicant, assignee, or an attorney/agent registered to practice before the Office explaining how the materiality standard is met. 5) A statement that applicant will agree to make an election without traverse in a telephonic interview if a restriction requirement is made

by the examiner. 6) The petition to make special must be filed electronically. 7) The petition must be filed at least one day prior to the date that a first Office Action appears in the Patent Application Information Retrieval (PAIR) system. 8) The petition must be accompanied by a request for early publication in compliance with 37 CFR 1.219 and include the publication fee as set forth in 37 CFR 1.18(d).

The requirement for a fee for consideration of the petition to make special for applications pertaining to Green Technologies has been waived.

The petition lacks item # 4.

In regard to item 4, petitioner should note that the instant petition includes a statement identifying the basis for the special status (i.e., whether the instant invention (1) materially enhances the quality of the environment or materially contributes to (2) development of renewable energy resources or energy conservation, or (3) greenhouse gas reduction) as required by sections II and III of the notice. However, as stated in the notice, applicant must also provide a statement pertaining to the materiality standard if the application disclosure is not clear on its face as to the materiality of the basis for the special status of the invention. This petition lacks such a statement and it is not agreed that the application on its face meets that materiality standard. Petitioner states that the claimed invention relates to development of renewable energy resources or energy conservation. This is not convincing. For example, it is not clear how the claimed step of "positioning an inner seal plate in the inner interface area of the pitch assembly, the inner seal plate restricting access to the pitch assembly from the rotatable hub" will provide and enhance the quality of the environment or contribute to development of renewable energy resources or energy conservation or greenhouse gas reduction.

Any reconsideration of this decision should be submitted through the USPTO electronic filing system, EFS-Web, and selecting the document description of "Petition for Green Tech Pilot" on the EFS-Web screen.

Telephone inquiries concerning this decision should be directed to Henry C. Yuen at 571-272-4856.

The application will be forwarded to the Technology Center Art Unit 3744 for action in its regular turn.

/Henry C. Yuen/

Henry C. Yuen
Quality Assurance Specialist
Technology Center 3700

IN THE UNITED STATES PATENT AND TRADEMARK OFFICE

First Named Inventor: Bradley Graham MOORE	)
Confirmation No.: 8844	)
	)
Serial No.: 12/916,063	)
	)
Filing Date: October 29, 2010	)
	)
Atty Docket No.: 246075-1	)

Commissioner for Patents
P.O. Box 1450
Alexandria, VA 22313-1450

Request for Reconsideration

SIR:

This is responsive to the Decision on Petition, dated as mailed 6 January 2011, in the above-referenced application.

Applicant respectfully requests reconsideration of Applicant's Petition to Make Special on the basis that the present invention materially contributes to the development of renewable energy resources or energy conservation.

Applicant respectfully submits that the present invention is directed to a method and apparatus for controlling access to a portion of a wind turbine. At least some known wind turbines have a rotatable hub that is open to the surrounding environment to facilitate cooling of components inside the hub and/or inside the nacelle of the wind turbine. However, this design of the hub also results in the pitch assembly being open to the harsh environmental and atmospheric conditions and contaminants contained therein as well. This exposure of the pitch assembly to the surrounding atmosphere may result in

increased wear of the pitch assembly due to the contaminants present in the atmosphere.

The embodiments set forth herein describe enclosure systems used to enclose a pitch assembly in a wind turbine. In these systems, the pitch assembly is enclosed from the harsh outside environmental and atmospheric conditions, while the other components in the rotatable hub remain open to the outside atmosphere and may be exposed to and cooled by the atmosphere. The pitch assembly is thus protected from the outside atmosphere and the contaminants contained therein. Thus the present invention materially contributes to the development of renewable energy by protecting the pitch assembly from increased wear and damage caused by contaminants present in the atmosphere. This reduces the number of interruptions of wind turbine operation for maintenance or repair, which in turn promotes increased energy production.

The undersigned attorney may be contacted at the number below to facilitate the resolution of any matters. Please charge any fees that are incurred in connection with this Statement to deposit account no. 09-0470.

Respectfully submitted,

General Electric Company

By : /ptd47323/
Peter T. DiMauro
Reg. No. 47,323

Dated: February 3, 2011

GE Global Patent Operation
2 Corporate Drive, Suite 648
Shelton, CT 06484
203-944-6755

UNITED STATES PATENT AND TRADEMARK OFFICE

UNITED STATES DEPARTMENT OF COMMERCE
United States Patent and Trademark Office
Address: COMMISSIONER FOR PATENTS
P.O. Box 1450
Alexandria, Virginia 22313-1450
www.uspto.gov

APPLICATION NO.	FILING DATE	FIRST NAMED INVENTOR	ATTORNEY DOCKET NO.	CONFIRMATION NO.
12/916,063	10/29/2010	Bradley Graham Moore	246075-1 (22402-239)	8844

45432 7590 02/14/2011
PATRICK W. RASCHE (22402)
ARMSTRONG TEASDALE LLP
7700 Forsyth Boulevard
Suite 1800
St. Louis, MO 63105

EXAMINER

ART UNIT	PAPER NUMBER
3745	

NOTIFICATION DATE	DELIVERY MODE
02/14/2011	ELECTRONIC

Please find below and/or attached an Office communication concerning this application or proceeding.

The time period for reply, if any, is set in the attached communication.

Notice of the Office communication was sent electronically on above-indicated "Notification Date" to the following e-mail address(es):

USpatents@armstrongteasdale.com

UNITED STATES PATENT AND TRADEMARK OFFICE

Commissioner for Patents
United States Patent and Trademark Office
P.O. Box 1450
Alexandria, VA 22313-1450
www.uspto.gov

PATRICK W. RASCHE (22402)
ARMSTRONG TEASDALE LLP
7700 Forsyth Boulevard
Suite 1800
St. Louis MO 63105

In re Application of	:	
MOORE, BRADLEY GRAHAM	:	DECISION ON PETITION
Application No. 12/916,063	:	TO MAKE SPECIAL UNDER
Filed: Oct. 29, 2010	:	THE GREEN TECHNOLOGY
Attorney Docket No. 246075 (22402-239)	:	PILOT PROGRAM

This is a decision on the renewed petition under 37 CFR 1.102, filed Feb. 4, 2011, to make the above-identified application special under the pilot program for applications pertaining to Green Technologies as set forth in 74 Federal Register Notice 64666 (December 8, 2009) and amended by 75 Federal Register Notice 28554 (May 21, 2010) and 75 Federal Register Notice 69049 (November 10, 2010).

The petition is **granted**

A grantable petition to make an application special under 37 CFR 1.102 and the pilot program as set forth in 74 FR 64666 must be directed to a nonprovisional application filed under 35 USC 111(a) or be a national stage entry under 35 USC 371, exclusive of any reissue applications.

In order to qualify for special status, the following requirements must be met. 1) The application must have no more than 3 independent claims and no more than 20 total claims. 2) The application must not contain any multiple dependent claims. 3) The petition must state the basis for seeking special status, i.e., the claimed invention either: A) materially enhances the quality of the environment or B) materially contributes to: i) the discovery or development of renewable energy resources, ii) the more efficient utilization and conservation of energy resources, or iii) greenhouse gas emission reduction. 4) If the disclosure is not clear on its face that the claimed invention materially contributes under category (A) or (B), the petition must be accompanied by a statement by the applicant, assignee, or an attorney/agent registered to practice before the Office explaining how the materiality standard is met. 5) A statement that applicant will agree to make an election without traverse in a telephonic interview if a restriction requirement is made

by the examiner. 6) The petition to make special must be filed electronically. 7) The petition must be filed at least one day prior to the date that a first Office Action appears in the Patent Application Information Retrieval (PAIR) system. 8) The petition must be accompanied by a request for early publication in compliance with 37 CFR 1.219 and include the publication fee as set forth in 37 CFR 1.18(d).

The requirement for a fee for consideration of the petition to make special for applications pertaining to Green Technologies has been waived.

The instant petition complies with items 1 – 8 above. Accordingly, the above-identified application has been accorded "special" status.

Telephone inquires concerning this decision should be directed to Henry C. Yuen at 571-272-4856.

This application is currently undergoing pre-examination processing. Upon completion, the application will be forwarded to the Technology Center Art Unit 3745 for action on the merits commensurate with this decision.

/Henry C. Yuen/

Henry C. Yuen
Quality Assurance Specialist
Technology Center TC 3700

UNITED STATES PATENT AND TRADEMARK OFFICE

Commissioner for Patents
United States Patent and Trademark Office
P.O. Box 1450
Alexandria, VA 22313-1450
www.uspto.gov

Decision Date : January 19, 2012

In re Application of :

CHIH-YI CHAO

Application No : 12916081

Filed : 29-Oct-2010

Attorney Docket No : 304-0169 (ALK-10005-USI)

DECISION ON REQUEST TO WITHDRAW AS ATTORNEY/AGENTOF RECORD

This is an electronic decision on the Request to Withdraw as attorney or agent of record under 37 CFR § 1.36(b), filed January 19, 2012

The request is **APPROVED.**

The request was signed by Michael A. Shimokaji (registration no. 32303) on behalf of all attorneys/agents associated with Customer Number 27431 . All attorneys/agents associated with Cusotmer Number 27431 have been withdrawn.

Since there are no remaining attorneys of record, all future communications from the Office will be directed to the first named inventor or assignee that has properly made itself of record pursuant to 37 CFR 3.71, with correspondence address:

Name	ALTEK CORPORATION
Name2	
Address 1	3F, NO. 10, LI-HSIN ROAD,
Address 2	SCIENCE-BASED INDUSTRIAL PARK
City	HSINCHU
State	
Postal Code	
Country	TW

As a reminder, requester is required to inform the first named inventor or assignee that has properly made itself of record pursuant to 37 CFR 3.71 of the electronically processed petition.

Telephone inquiries concerning this decision should be directed to the Patent Electronic Business Center (EBC) at 866-217-9197.

Office of Petitions

Doc Code: PET.AUTO **Document Description: Petition automatically granted by EFS-Web**	PTO/SB/83 U.S. Patent and Trademark Office Department of Commerce

Electronic Petition Request	**REQUEST FOR WITHDRAWAL AS ATTORNEY OR AGENT AND CHANGE OF CORRESPONDENCE ADDRESS**
Application Number	12916081
Filing Date	29-Oct-2010
First Named Inventor	CHIH-YI CHAO
Art Unit	2622
Examiner Name	LIN YE
Attorney Docket Number	304-0169 (ALK-10005-USI)
Title	UNLOCKING METHOD OF A TOUCH SCREEN AND ELECTRONIC DEVICE WITH CAMERA FUNCTION THEREOF

◉ Please withdraw me as attorney or agent for the above identified patent application and the practitioners of record associated with Customer Number: 27431

The reason(s) for this request are those described in 37 CFR:

10.40(c)(1)(iv)

10.40(c)(3)

Certifications

☒ I/We have given reasonable notice to the client, prior to the expiration of the response period, that the practitioner(s) intend to withdraw from employment

☒ I/We have delivered to the client or a duly authorized representative of the client all papers and property (including funds) to which the client is entitled

☒ I/We have notified the client of any responses that may be due and the time frame within which the client must respond

Change the correspondence address and direct all future correspondence to the first named inventor or assignee that has properly made itself of record pursuant to 37 CFR 3.71:

Name	ALTEK CORPORATION
Address	3F, NO. 10, LI-HSIN ROAD, SCIENCE-BASED INDUSTRIAL PARK
City	HSINCHU
State	
Postal Code	

Country	TW
I am authorized to sign on behalf of myself and all withdrawing practitioners.	
Signature	/MICHAEL SHIMOKAJI/
Name	Michael A. Shimokaji
Registration Number	32303

UNITED STATES PATENT AND TRADEMARK OFFICE

Commissioner for Patents
United States Patent and Trademark Office
P.O. Box 1450
Alexandria, VA 22313-1450
www.uspto.gov

In re Application of
Vladimir Mikhailovitch Zakoshans

Application No. 12916088

Filed: October 29,2010

Attorney Docket No. 1007-13

:DECISION ON PETITION TO MAKE SPECIAL
:UNDER 37 CFR 1.102(c)(1)

This is a decision on the electronic petition under 37 CFR 1.102 (c)(1), filed 01-JUN-2011 to make the above-identified application special based on applicant's age as set forth in MPEP § 708.02, Section IV.

The petition is **GRANTED**.

A grantable petition to make an application special under 37 CFR 1.102(c)(1), MPEP § 708.02, Section IV: Applicant's Age must include a statement by applicant or a registered practitioner having evidence that applicant is at least 65 years of age. No fee is required.

Accordingly, the above-identified application has been accorded "special" status and will be taken up for action by the examiner upon the completion of all pre-examination processing.

Telephone inquiries concerning this electronic decision should be directed to the Electronic Business Center at 866-217-9197.

All other inquiries concerning either the examination or status of the application should be directed to the Technology Center.

Doc code : PET.OP.AGE
Description : Petition to make special based on Age/Health

PTO/SB/130 (07-09)
Approved for use through 07/31/2012. OMB 0651- 0031
U.S. Patent and Trademark Office; U.S. DEPARTMENT OF COMMERCE
Under the Paperwork Reduction Act of 1995, no persons are required to respond to a collection of information unless it contains a valid OMB control number

PETITION TO MAKE SPECIAL BASED ON AGE FOR ADVANCEMENT OF EXAMINATION UNDER 37 CFR 1.102(c)(1)

Application Information

Application Number	12916088	Confirmation Number	8899	Filing Date	2010-10-29
Attorney Docket Number (optional)	1007-13	Art Unit	1625	Examiner	
First Named Inventor	Vladimir Mikhailovitch Zakoshansky				
Title of Invention	NON-BARBOTAGE METHOD FOR OXIDATION OF HYDROCARBONS BY FORMING AND UTILIZING LIQUID PHASE THIN FILM				

Attention: Office of Petitions
An application may be made special for advancement of examination upon filing of a petition showing that the applicant is 65 years of age, or more. No fee is required with such a petition. See 37 CFR 1.102(c)(1) and MPEP 708.02 (IV).

APPLICANT HEREBY PETITIONS TO MAKE SPECIAL FOR ADVANCEMENT OF EXAMINATION IN THIS APPLICATION UNDER 37 CFR 1.102(c)(1) and MPEP 708.02 (IV) ON THE BASIS OF THE APPLICANT'S AGE.

A grantable petition requires one of the following items:
(1) Statement by one named inventor in the application that he/she is 65 years of age, or more; or
(2) Certification by a registered attorney/agent having evidence such as a birth certificate, passport, driver's license, etc. showing one named inventor in the application is 65 years of age, or more.

Name of Inventor who is 65 years of age, or older

Given Name	Middle Name	Family Name	Suffix
Vladimir	Mikhailovitch	Zakoshanskyl	

A signature of the applicant or representative is required in accordance with 37 CFR 1.33 and 10.18.
Please see 37 CFR 1.4(d) for the format of the signature.

Select (1) or (2) :

○ (1) I am an inventor in this application and I am 65 years of age, or more.

◉ (2) I am an attorney or agent registered to practice before the Patent and Trademark Office, and I certify that I am in possession of evidence, and will retain such in the application file record, showing that the inventor listed above is 65 years of age, or more.

Signature	/Edward Etkin/	Date (YYYY-MM-DD)	2011-05-04
Name	Edward Etkin	Registration Number	37824

PTO/SB/130 (07-09)
Approved for use through 07/31/2012. OMB 0651- 0031
U.S. Patent and Trademark Office; U.S. DEPARTMENT OF COMMERCE
Under the Paperwork Reduction Act of 1995, no persons are required to respond to a collection of information unless it contains a valid OMB control number

Privacy Act Statement

The Privacy Act of 1974 (P.L. 93-579) requires that you be given certain information in connection with your submission of the attached form related to a patent application or patent. Accordingly, pursuant to the requirements of the Act, please be advised that: (1) the general authority for the collection of this information is 35 U.S.C. 2(b)(2); (2) furnishing of the information solicited is voluntary; and (3) the principal purpose for which the information is used by the U.S. Patent and Trademark Office is to process and/or examine your submission related to a patent application or patent. If you do not furnish the requested information, the U.S. Patent and Trademark Office may not be able to process and/or examine your submission, which may result in termination of proceedings or abandonment of the application or expiration of the patent.

The information provided by you in this form will be subject to the following routine uses:

1. The information on this form will be treated confidentially to the extent allowed under the Freedom of Information Act (5 U.S.C. 552) and the Privacy Act (5 U.S.C. 552a). Records from this system of records may be disclosed to the Department of Justice to determine whether the Fr eedom of Information Act requires disclosure of these records.

2. A record from this system of records may be disclosed, as a routine use, in the course of presenting evidence to a court, magistrate, or administrative tribunal, including disclosures to opposing counsel in the course of settlement negotiations.

3. A record in this system of records may be disclosed, as a routine use, to a Member of Congress submitting a request involving an individual, to whom the record pertains, when the individual has requested assistance from the Member with respect to the subject matter of the record.

4. A record in this system of records may be disclosed, as a routine use, to a contractor of the Agency having need for the information in order to perform a contract. Recipients of information shall be required to comply with the requirements of the Privacy Act of 1974, as amended, pursuant to 5 U.S.C. 552a(m).

5. A record related to an International Application filed under the Patent Cooperation Treaty in this system of records may be disclosed, as a routine use, to the International Bureau of the World Intellectual Property Organization, pursuant to the Patent Cooperation Treaty.

6. A record in this system of records may be disclosed, as a routine use, to another federal agency for purposes of National Security review (35 U.S.C. 181) and for review pursuant to the Atomic Energy Act (42 U.S.C. 218(c)).

7. A record from this system of records may be disclosed, as a routine use, to the Administrator, General Services, or his/her designee, during an inspection of records conducted by GSA as part of that agency's responsibility to recommend improvements in records management practices and programs, under authority of 44 U.S.C. 2904 and 2906. Such disclosure shall be made in accordance with the GSA regulations governing inspection of records for this purpose, and any other relevant (i.e., GSA or Commerce) directive. Such disclosure shall not be used to make determinations about indivi duals.

8. A record from this system of records may be disclosed, as a routine use, to the public after either publication of the application pursuant to 35 U.S.C. 122(b) or issuance of a patent pursuant to 35 U.S.C. 151. Further, a record may be disclosed, subject to the limitations of 37 CFR 1.14, as a routine use, to the public if the record was filed in an application which became abandoned or in which the proceedings were terminated and which application is referenced by either a published application, an application open to public inspections or an issued patent.

9. A record from this system of records may be disclosed, as a routine use, to a Federal, State, or local law enforcement agency, if the USPTO becomes aware of a violation or potential violation of law or regulation.

UNITED STATES PATENT AND TRADEMARK OFFICE

Commissioner for Patents
United States Patent and Trademark Office
P.O. Box 1450
Alexandria, VA 22313-1450
www.uspto.gov

EDWARD ETKIN, ESQ.
Law Office of Edward Etkin, PC
228 West End Avenue, Suite A
Brooklyn NY 11235

MAILED
SEP 12 2011
OFFICE OF PETITIONS

In re Application of	:	
Vladimir Mikhailovitch Zakoshansky	:	
Application No. 12/916,088	:	DECISION ON PETITION
Filed: October 29, 2010	:	
Attorney Docket No. 1007-13	:	

This is a decision on the petition under the unintentional provisions of 37 CFR 1.137(b), filed September 1, 2011, to revive the above-identified application.

The petition is **GRANTED**.

The application became abandoned for failure to reply in a timely manner to the Notice of File Corrected Application Papers, mailed November 15, 2010. The Notice set a period for reply of two (2) months from the mail date of the Notice. No extensions of time under the provisions of 37 CFR 1.136(a) were obtained. Accordingly, the application became abandoned on January 16, 2011. The Notice of Abandonment was mailed on July 29, 2011.

The petition satisfies the requirements of 37 CFR 1.137(b) in that petitioner has supplied (1) the reply in the form of replacement drawings, (2) the petition fee of $810, (3) a proper statement of unintentional delay. Accordingly the replacement drawings are accepted as being unintentionally delayed.

Telephone inquiries concerning this decision should be directed to Kimberly Inabinet at (571) 272-4618.

This application is being referred to the Office of Patent Application Processing for appropriate action in the normal course of business on the replies received September 1, 2011.

/Kimberly Inabinet/

Kimberly Inabinet
Petitions Examiner
Office of Petitions

UNITED STATES PATENT AND TRADEMARK OFFICE

UNITED STATES DEPARTMENT OF COMMERCE
United States Patent and Trademark Office
Address: COMMISSIONER FOR PATENTS
P.O. Box 1450
Alexandria, Virginia 22313-1450
www.uspto.gov

APPLICATION NO.	FILING DATE	FIRST NAMED INVENTOR	ATTORNEY DOCKET NO.	CONFIRMATION NO.
12/916,123	10/29/2010	Kazuhiro SEO	FUK.006.0020.NP	8980

7590 03/19/2012

MOTS LAW, PLLC
1629 K STREET N.W.
SUITE 200
WASHINGTON, DC 20006-1635

EXAMINER
ASSOUAD, PATRICK J

ART UNIT	PAPER NUMBER
2858	

MAIL DATE	DELIVERY MODE
03/19/2012	PAPER

DECISION GRANTING PETITION UNDER 37 CFR 1.138(d)

The declaration of express abandonment is recognized

This is in response to the petition under 37 CFR 1.138(d), requesting for a refund of any previously paid search fee and excess claims fee in the above-identified application.

The petition is granted.

The express abandonment is recognized. Any previously paid search fee and excess claims fee are hereby refunded.

Telephone inquiries should be directed to the Office of Data Management at (571) 272-4200.

Betty Powell

Patent Publication Branch
Office of Data Management

FORM PET651G (Rev. 08/07)

UNITED STATES PATENT AND TRADEMARK OFFICE

Commissioner for Patents
United States Patent and Trademark Office
P.O. Box 1450
Alexandria, VA 22313-1450
www.uspto.gov

MAILED
JUL 07 2011
OFFICE OF PETITIONS

KILPATRICK TOWNSEND & STOCKTON LLP
TWO EMBARCADERO CENTER
EIGHTH FLOOR
SAN FRANCISCO CA 94111-3834

In re Application of	:	
Michael Munroe	:	
Application No. 12/916,131	:	DECISION ON PETITION
Filed: 10/29/2010	:	
Docket No. 89146-794206 (002120US)	:	
Title: METHOD AND SYSTEM USING	:	
PHASE MODULATION TO REDUCE	:	
SPECTRAL BROADENING	:	

This is in response to the petition under 37 CFR 1.47(b) filed Monday, June 20, 2011. Petitioner obtained an extension of time for response within the fifth month. Accordingly, the petition is filed timely.

A grantable petition under 37 CFR 1.47(b) requires: (1) proof that the non-signing inventor cannot be reached or refuses to sign the oath or declaration; (2) an acceptable oath or declaration; (3) the petition fee; (4) a statement of the last known address of the non-signing inventor; (5) proof of proprietary interest; and (6) proof of irreparable damage.

Petitioner lacks item (2) set forth above.

Pursuant to MPEP 409.03(b):

> The 37 CFR 1.47(b) applicant must make the oath required by 37 CFR 1.63 and 1.64 or 1.175. Where a corporation is the 37 CFR 1.47(b) applicant, an officer (President, Vice-President, Secretary, Treasurer, or Chief Executive Officer) thereof should normally sign the necessary oath or declaration. A corporation may authorize any person, including an attorney or agent registered to practice before the U.S. Patent and Trademark Office, to sign the application oath or declaration on its behalf. Where an

> oath or declaration is signed by a registered attorney or agent on behalf of a corporation, either proof of the attorney's or agent's authority in the form of a statement signed by an appropriate corporate officer must be submitted, or the attorney or agent may simply state that he or she is authorized to sign on behalf of the corporation. Where the oath or declaration is being signed on behalf of an assignee, see MPEP Section 324. An inventor may not authorize another individual to act as his or her agent to sign the application oath or declaration on his or her behalf. *Staeger v. Commissioner*, 189 USPQ 272 (D.D.C. 1976), *In re Striker*, 182 USPQ 507 (Comm'r Pat. 1973). Where an application is executed by one other than the inventor, the declaration required by 37 CFR 1.63 must state the full name, residence, post office address, and citizenship of the nonsigning inventor. Also, the title or position of the person signing must be stated if signing on behalf of a corporation under 37 CFR 1.47(b).

Petitioner submitted a declaration signed by Craig C. Largent, a registered attorney, on behalf of Deep Photonics Corporation. Mr. Largent stated: "As permitted under 37 C.F.R. § 1.47(b), the requisite § 1.63 declaration is executed by Craig C. Largent, a partner at Kilpatrick Townsend & Stockton, LLP, and submitted herewith." *Petition, p. 2.* However, petitioner did not provide proof of Mr. Largent's authority in the form of a statement signed by an appropriate corporate officer nor did Mr. Largent state that he is authorized to sign on behalf of the corporation.

Accordingly, the petition is **dismissed**. Petitioner is given TWO (2) MONTHS from the mailing date of this decision to respond, correcting the noted deficiency. Any response should be entitled "Request for Reconsideration of Petition Under 37 CFR 1.47(b)" and may include an oath or declaration executed by the inventor. **Failure to respond will result in abandonment of the application**. Any extensions of time will be governed by 37 CFR 1.136(a).

Further correspondence with respect to this matter should be addressed as follows:

By mail: Mail Stop Petition
Commissioner for Patents
P.O. Box 1450
Alexandria, VA 22313-1450

By FAX: (571) 273-8300
Attn: Office of Petitions

By hand: Customer Service Window
Randolph Building
401 Dulany Street
Alexandria, VA 22314

Correspondence may also be submitted via the Electronic Filing System of the USPTO.

Telephone inquiries related to this decision should be directed to the undersigned at (571) 272-3211.

Christina Tartera Donnell

Christina Tartera Donnell
Senior Petitions Attorney
Office of Petitions

UNITED STATES PATENT AND TRADEMARK OFFICE

Commissioner for Patents
United States Patent and Trademark Office
P.O. Box 1450
Alexandria, VA 22313-1450
www.uspto.gov

KILPATRICK TOWNSEND & STOCKTON LLP
TWO EMBARCADERO CENTER
EIGHTH FLOOR
SAN FRANCISCO CA 94111-3834

MAILED

SEP 14 2011

OFFICE OF PETITIONS

In re Application of
Michael Munroe
Application No. 12/916,131
Filed: 10/29/2010
Docket No. 89146-794206 (002120US)
Title: METHOD AND SYSTEM USING PHASE MODULATION TO REDUCE SPECTRAL BROADENING

DECISION ACCORDING STATUS UNDER 37 CFR 1.47(b)

This is in response to the renewed petition under 37 CFR 1.47(b) filed September 1, 2011.

The petition is **granted**.

Applicant showed that Michael J. Munroe, the non-signing inventor, constructively refused to join in the application after being presented with a copy of the application papers and declaration for his signature. Applicant established that Deep Photonics Corporation has a proprietary interest in the above-identified application with the submission of a legal memorandum signed by practitioner, William F. Cloran. The legal memorandum indicated that a court of competent jurisdiction would by the weight of authority in that jurisdiction award title of the invention to Deep Photonics Corporation. Applicant also provided the Declaration of Facts of practitioner, Craig C. Largent, in further support of the petition. Applicant averred that the filing was necessary to preserve the rights of the parties and prevent irreparable damage. Lastly, applicant provided the Office with the last known address of the inventor, an acceptable declaration and the requisite fees.

The Office has reviewed this application and paper and have found them in compliance with 37 CFR 1.47(b). This application is hereby accorded Rule 1.47(b) status. As provided in Rule 1.47(c), this Office will forward notice of this application's filing to the non-signing inventor at the address

given in the petition. Notice of the filing of this application will also be published in the Official Gazette.

This matter is being referred to the Office of Patent Application Processing for pre-examination processing.

Telephone inquiries related to this decision should be directed to the undersigned at (571) 272-3211.

Christina Tartera Donnell

Christina Tartera Donnell
Senior Petitions Attorney
Office of Petitions

UNITED STATES PATENT AND TRADEMARK OFFICE

Commissioner for Patents
United States Patent and Trademark Office
P.O. Box 1450
Alexandria, VA 22313-1450
www.uspto.gov

Michael J. Munroe
1430 Willamette Street
Eugene OR 97401

MAILED

SEP 14 2011

OFFICE OF PETITIONS

In re Application of
Michael Munroe
Application No. 12/916,131
Filed: 10/29/2010
Docket No. 89146-794206 (002120US)
Title: METHOD AND SYSTEM USING PHASE MODULATION TO REDUCE SPECTRAL BROADENING

LETTER

Dear Mr. Munroe:

You are named as the sole inventor in the above-identified United States patent application, filed under the provisions of 35 U.S.C. 116 (United States Code), and 37 CFR 1.47(b), Rules of Practice in Patent Cases. Should a patent be granted on the application you will be designated therein as the sole inventor.

As a named inventor you are entitled to inspect any paper in the file wrapper of the application, order copies of all or any part thereof (at a prepaid cost per 37 CFR 1.19) or make your position of record in the application. Alternatively, you may arrange to do any of the preceding through a registered patent attorney or agent presenting written authorization from you. If you care to join the application, counsel of record (see below) would presumably assist you. Joining the application would entail the filing of an appropriate oath or declaration by you pursuant to 37 CFR 1.63.

Requests for information regarding your application should be directed to the File Information Unit at (703) 308-2733. Information regarding how to pay for and order a copy of the application, or a specific paper in the application should be directed to the Certification Division at (571) 272-3150 or (800) 972-6382 (outside the Washington, DC area).

C. T. Donnell

Christina Tartera Donnell
Senior Petitions Attorney
Office of Petitions

KILPATRICK TOWNSEND & STOCKTON LLP
TWO EMBARCADERO CENTER
EIGHTH FLOOR
SAN FRANCISCO CA 94111-3834

UNITED STATES PATENT AND TRADEMARK OFFICE

Commissioner for Patents
United States Patent and Trademark Office
P.O. Box 1450
Alexandria, VA 22313-1450
www.uspto.gov

Muncy, Geissler, Olds & Lowe, PLLC
4000 Legato Road
Suite 310
FAIRFAX VA 22033

MAILED

FEB 14 2011

OFFICE OF PETITIONS

In re Application: :
Meng-Wen Pan :
Application No. 12/916,138 :
Filed: October 29, 2010 :
Attorney Docket No. 3722/0766PUS1 :

NOTICE

This is a notice regarding your request for acceptance of a fee deficiency submission under 37 CFR 1.28 filed December 13, 2010. On September 1, 1998, the Court of Appeals for the Federal Circuit held that 37 CFR 1.28(c) is the sole provision governing the time for correction of the erroneous payment of the issue fee as a small entity. **See DH Technology v. Synergystex International, Inc. 154 F.3d 1333, 47 USPQ2d 1865 (Fed. Cir. Sept. 1, 1998).**

The Office no longer investigates or rejects original or reissue applications under 37 CFR 1.56. **1098 Off. Gaz. Pat. Office 502 (January 3, 1989)**. Therefore, nothing in this Notice is intended to imply that an investigation was done.

Your fee deficiency submission under 37 CFR 1.28 is hereby accepted. The petition is **GRANTED**.

This application is no longer entitled to small entity status. Accordingly, all future fees paid in this application must be paid at the large entity rate.

This file is being forwarded to Technology Center 2625.

Telephone inquiries related to this decision should be directed to the Kimberly Inabinet at (571) 272-4618.

/Kimberly Inabinet/
Kimberly Inabinet
Petitions Examiner
Office of Petitions

Doc Code: PPH.PCT.652
Document Description: Petition to make special under PCT-Patent Pros Hwy

PTO/SB/20PCT-KR (06-10)
Approved for use through 01/31/2012. OMB 0651-0058
U.S. Patent and Trademark Office; U. S. DEPARTMENT OF COMMERCE
Under the Paperwork Reduction Act of 1995, no persons are required to respond to a collection of information unless it displays a valid OMB control number.

REQUEST FOR PARTICIPATION IN THE PATENT COOPERATION TREATY - PATENT PROSECUTION HIGHWAY (PCT-PPH) PILOT PROGRAM BETWEEN THE KOREAN INTELLECTUAL PROPERTY OFFICE (KIPO) AND THE USPTO

Application No:	To be assigned	Filing date:	October 29, 2010
First Named Inventor:	Mark Noonan		
Title of the Invention:	Devices and Methods Relating to the Cleanup of Leaves, To Pouring or Filling Non-Liquids, etc.		

THIS REQUEST FOR PARTICIPATION IN THE PCT-PPH PILOT PROGRAM ALONG WITH THE REQUIRED DOCUMENTS MUST BE SUBMITTED VIA EFS-WEB. INFORMATION REGARDING EFS-WEB IS AVAILABLE AT HTTP://WWW.USPTO.GOV/EBC/EFS_HELP.HTML

APPLICANT HEREBY REQUESTS PARTICIPATION IN THE PCT-PPH PROGRAM AND PETITIONS TO MAKE THE ABOVE-IDENTIFIED APPLICATION SPECIAL UNDER THE PCT-PPH PROGRAM.

The above-identified application is (1) a national stage entry of the corresponding PCT application, or (2) a national stage entry of another PCT application which claims priority to the corresponding PCT application, or (3) a national application that claims domestic/ foreign priority to the corresponding PCT application, or (4) a national application which forms the basis for the priority claim in the corresponding PCT application, or (5) a continuing application of a U.S. application that satisfies one of (1) to (4) above, or (6) a U.S. application that claims domestic benefit to a U.S. provisional application which forms the basis for the priority claim in the corresponding PCT application.

The corresponding PCT application number(s) is/are: PCT/US2009/063500 (published as WO 2010/054157)

The international date of the corresponding PCT application(s) is/are: November 6, 2009

I. List of Required Documents:

a. **A copy of the latest international work product (WO/ISA, WO/IPEA, or IPER) in the above–identified corresponding PCT application(s)**

☐ Is attached.

☒ Is not attached because the document is already in the U.S. application.

b. **A copy of all claims which were indicated as having novelty, inventive step and industrial applicability in the above-identified corresponding PCT application(s).**

☒ Is attached.

☐ Is not attached because the document is already in the U.S. application.

c. **English translations of the documents in a. and b. above are attached (if the documents are not in the English language). A statement that the English translation is accurate is attached for the document in b. above.**

This collection of information is required by 35 U.S.C. 119, 37 CFR 1.55, and 37 CFR 1.102(d). The information is required to obtain or retain a benefit by the public, which is to file (and by the USPTO to process) an application. Confidentiality is governed by 35 U.S.C. 122 and 37 CFR 1.11 and 1.14. This collection is estimated to take 2 hours to complete, including gathering, preparing, and submitting the completed application form to the USPTO. Time will vary depending upon the individual case. Any comments on the amount of time you require to complete this form and/or suggestions for reducing this burden should be sent to the Chief Information Officer, U.S. Patent and Trademark Office, U.S. Department of Commerce, P.O. Box 1450, Alexandria, VA 22313-1450. DO NOT SEND FEES OR COMPLETED FORMS TO THIS ADDRESS.

Approved for use through 01/31/2012. OMB 0651-0058
U.S.Patent and Trademark Office; U.S. DEPARTMENT OF COMMERCE
Under the Paperwork Reduction Act of 1995, no persons are required to respond to a collection of information unless it displays a valid OMB control number.

REQUEST FOR PARTICIPATION IN THE PCT-PPH PILOT PROGRAM BETWEEN THE KIPO AND THE USPTO

(continued)

Application No.:	To be assigned
First Named Inventor:	Mark Noonan

d. **(1) An information disclosure statement listing the documents cited in the international work products (ISR, WO/ISA, WO/IPEA, IPER) of the corresponding PCT application.**

☐ Is attached

☒ Has already been filed in the above-identified U.S. application on See IDS filed October 29, 2010

(2) Copies of all documents (except) for U.S. patents or U.S. patent application publications)

☒ Are attached.

Have already been filed in the above-identified U.S. application on See IDS filed October 29, 2010

II. Claims Correspondence Table:

Claims in US Application	Patentable Claims in the corresponding PCT Application	Explanation regarding the correspondence
1	1	Same
2	2	Same
3	3	Same
4	5	Similar scope
5	6	Same
6	7 and 9	Similar scope
7	11 and 12	Similar scope
8	14	Same
9	17	Same
10	18	Similar scope
11	19	Same
12	X	Depends from patentable claim 1
13	X	Depends from patentable claim 1
14	X	Depends from patentable claim 1
15	40	Same
16	41, 42, and 44	Same
17	X	Depends from patentable independent claim 15
18	45, 47, and 48	Similar scope
19	20	Same

III. All the claims in the US application sufficiently correspond to the patentable claims in the corresponding PCT application.

Signature	/Anthony G. Fussner/	Date	October 29, 2010
Name (Print/Typed)	Anthony G. Fussner	Registration Number	47582

Approved for use through 01/31/2012. OMB 0651-0058
U.S.Patent and Trademark Office; U.S. DEPARTMENT OF COMMERCE

Under the Paperwork Reduction Act of 1995, no persons are required to respond to a collection of information unless it displays a valid OMB control number.

REQUEST FOR PARTICIPATION IN THE PCT-PPH PILOT PROGRAM BETWEEN THE KIPO AND THE USPTO

(continued)

Application No.:	To be assigned
First Named Inventor:	Mark Noonan

d. **(1) An information disclosure statement listing the documents cited in the international work products (ISR, WO/ISA, WO/IPEA, IPER) of the corresponding PCT application.**

☐ Is attached

☒ Has already been filed in the above-identified U.S. application on See IDS filed October 29, 2010

(2) Copies of all documents (except) for U.S. patents or U.S. patent application publications)

☒ Are attached.

Have already been filed in the above-identified U.S. application on See IDS filed October 29, 2010

II. Claims Correspondence Table:

Claims in US Application	Patentable Claims in the corresponding PCT Application	Explanation regarding the correspondence
20	21 and 22	Same
21	22, 23, 24, 25, 26, 27	Same
22	22, 23, 28, 29, 30, 31	Same
23	32, 33, 34, 37	Same
24	35	Same
25	50	Similar scope
26	51, 52, 53, 54, 55, 60	Similar scope

III. All the claims in the US application sufficiently correspond to the patentable claims in the corresponding PCT application.

Signature	/Anthony G. Fussner/	Date	October 29, 2010
Name (Print/Typed)	Anthony G. Fussner	Registration Number	47582

UNITED STATES PATENT AND TRADEMARK OFFICE

UNITED STATES DEPARTMENT OF COMMERCE
United States Patent and Trademark Office
Address: COMMISSIONER FOR PATENTS
P.O. Box 1450
Alexandria, Virginia 22313-1450
www.uspto.gov

APPLICATION NO.	FILING DATE	FIRST NAMED INVENTOR	ATTORNEY DOCKET NO.	CONFIRMATION NO.
12/916,151	10/29/2010	Mark Noonan	6175A-000005/US/CPB	9047

28997 7590 12/13/2010
HARNESS, DICKEY, & PIERCE, P.L.C
7700 Bonhomme, Suite 400
ST. LOUIS, MO 63105

EXAMINER

ART UNIT	PAPER NUMBER
3751	

MAIL DATE	DELIVERY MODE
12/13/2010	PAPER

Please find below and/or attached an Office communication concerning this application or proceeding.

The time period for reply, if any, is set in the attached communication.

UNITED STATES PATENT AND TRADEMARK OFFICE

Commissioner for Patents
United States Patent and Trademark Office
P.O. Box 1450
Alexandria, VA 22313-1450
www.uspto.gov

HARNESS, DICKEY, & PIERCE, P.L.C
7700 Bonhomme, Suite 400
ST. LOUIS MO 63105

In re Application of	:	
NOONAN, MARK	:	DECISION ON REQUEST TO
Application No. 12/916,151	:	PARTICIPATE IN PATENT
Filed: Oct. 29, 2010	:	PCT/PROSECUTION HIGHWAY
Attorney Docket No. 6175A-000005/US/CPB	:	PROGRAM AND PETITION
Title: DEVICES AND METHODS RELATING TO THE CLEANUP OF LEAVES, TO POURING OR FILLING NON-LIQUIDS, AND/OR TO RECONFIGURABLE FUNNELING APPARATUS	:	37 CFR 1.102(a)

This is a decision on the request to participate in the Patent Prosecution Highway (PPH) program and the petition under 37 CFR 1.102(d), filed Oct. 29, 2010, to make the above-identified application special.

The request and petition are Dismissed.

A grantable request to participate in the PPH program and petition to make special require:
(1) The U.S. application must disclose an eligible relationship to one or more PCT applications filed in the KIPO, JPO, EPO or USPTO;
(2) Applicant must submit a copy of the allowable/patentable claim(s) from the PCT application(s) latest international work product (the written opinion or the IPER) along with an English translation thereof and a statement that the English translation is accurate;
(3) All the claims in the U.S. application must sufficiently correspond or be amended to sufficiently correspond to the allowable/patentable claim(s) in the PCT application(s);
(4) Examination of the U.S. application has not begun;
(5) Applicant must submit a copy of the latest international work product from the PCT application containing the allowable/patentable claim(s) along with an English translation thereof and a statement that the English translation is accurate; and
(6) Applicant must submit an IDS listing the documents cited by the PCT examiner in the international work product along with copies of documents except U.S. patents or U.S. patent application publications.

With regard to Items #2 and 3, the applicant failed to submit a copy of KIPO office action or PCT positive search opinion indicating any claims 1-60 are patentable. KIPO or PCT Office action or work product does not positively indicate claims 1-60 are patentable. There is no copy of patentable claims from the KIPO or PCT Office action provided. In the claim comparison chart, petitioner explained 26 claims in the current application. However, in the amendment of Nov. 17, 2010, there are 28 claims. Claims 27-28 were not examined by the KIPO patent examiner and should be cancelled. .

With regard to Item #5, the applicant must submit a copy of the latest KIPO work product containing the allowable/patentable claim(s) along with an English translation thereof and a statement that the English translation is accurate.

With regard to Item #6, a list of prior cited by the KIPO or PCT search opinion is also not provided with the petition.

Applicant is encouraged to cite and submit all relevant prior art references, if any, to facilitate examination in this application.

Applicant is given a time period of **ONE MONTH or THIRTY DAYS**, whichever is longer, from the mailing date of this decision to correct the deficiencies. **NO EXTENSION OF TIME UNDER 37 CFR 1.136 IS PERMITTED.** If the deficiencies are not corrected with the time period given, the application will await action in its regular turn. Response must be filed via EFS-Web. Currently, the application is undergoing pre-examination processing.

Telephone inquiries concerning this decision should be directed to Henry C. Yuen at 571-272-4856.

Petition is **dismissed**.

/Henry C. Yuen/

Henry C. Yuen, Special Programs Examiner
Technology Center 3700 – Mechanical Engineering,
Manufacturing and Products
571-272-4856

PATENT

IN THE UNITED STATES PATENT AND TRADEMARK OFFICE

Application No.:	12/916,151
Filing Date:	October 29, 2010
Applicant:	Mark Noonan
Group Art Unit:	3751
Examiner:	Henry C. Yuen
Confirmation No.:	9047
Title:	DEVICES AND METHODS RELATING TO THE CLEANUP OF LEAVES, TO POURING OR FILLING NON-LIQUIDS, AND/OR TO RECONFIGURABLE FUNNELING APPARATUS
Attorney Docket:	6175A-000005/US/CPB

Commissioner for Patents
P.O. Box 1450
Alexandria, Virginia 22313-1450

RESPONSE TO DECISION ON REQUEST TO PARTICIPATE IN THE PCT PATENT PROSECUTION HIGHWAY PILOT PROGRAM AND PETITION TO MAKE SPECIAL UNDER 37 CFR 1.102(d)

Dear Sir:

On December 13, 2010, the USPTO dismissed Applicant's Petition and Request to Participate in the PCT Patent Prosecution Highway Pilot Program dated October 29, 2010 on the grounds that the Petition fails to provide a copy of the following:

1. KIPO office action or PCT positive search opinion indicating any claims 1-60 are patentable;

2. Latest work product containing the allowable/patentable claim(s) along with an English translation thereof and a statement that the English translation is accurate; and

3. A list of prior cited art by the KIPO or PCT search opinion.

Regarding new claims 27 and 28, the Office is correct that these claims were not examined by the KIPO patent examiner. But Applicant notes the claims 27 and 28 depend directly from independent claims 15 and 19, respectively. As indicated in the Claims Correspondence Table in the Petition, independent claims 15 and 19 of the instant application are the same as allowable/patentable PCT application claims 40 and 20, respectively. Thus, even though dependent claims 27 and 28 were not examined by the KIPO patent examiner, Applicant respectfully points out that dependent claims 27 and 28 would have been indicated as patentable/allowable as well at least because of their dependence from allowable/patentable independent claims.

Applicant submits herewith a copy of the published PCT application No. PCT/US2009/063500 (WO 2010/054157) which includes the allowable/patentable claims 1-60. This published PCT application WO 2010/051457 is in English.

Applicant also submits a copy of the PCT International Search Report (Form PCT/ISA/210) and Written Opinion of the International Searching Authority (Form PCT/ISA/237) in PCT Application No. PCT/US2009/063500. The Written Opinion clearly indicated that Claims 1-60 satisfy the criteria set out in PCT Article 33(2) and (3) with respect to novelty and inventive step, and the claims are industrially applicable under PCT Article 33(4).

Applicant also submits herewith a copy of the Information Disclosure Statement and Form 1449 filed on October 29, 2010 and a copy of the references cited therein.

Accordingly, the U.S. Application No. 12/916,151 is believed to have met all the requirements necessary to be eligible to participate in the PCT-PPH pilot program. Therefore, Applicant respectfully requests approval of the request for the PCT Patent Prosecution Highway Pilot Program for U.S. Patent Application 12/916,151.

It is believed that no fees are due in connection with this response. If, however, Applicants owed any fee(s), the Commissioner is hereby authorized to charge such fee(s) to Deposit Account No. **08-0750**.

Respectfully submitted,

/Anthony G. Fussner/

Dated: December 17, 2010 By: _____

Anthony G. Fussner, Reg. No. 47,582

HARNESS, DICKEY & PIERCE, P.L.C.
7700 Bonhomme, Ste. 400
St. Louis, MO 63105
(314) 446-7670 (direct)
(314) 726-7501 (facsimile)

Attachments:

A copy of published PCT Application No. PCT/US2009/063500 (WO 2010/054157)

A copy of the PCT International Search Report and Written Opinion of the International Searching Authority in PCT Application No. PCT/US2009/063500

A copy of the Information Disclosure Statement and Form 1449 filed October 29, 2010 and a copy of the references cited therein

(12) INTERNATIONAL APPLICATION PUBLISHED UNDER THE PATENT COOPERATION TREATY (PCT)

(19) World Intellectual Property Organization
International Bureau

(43) International Publication Date
14 May 2010 (14.05.2010)

PCT

(10) International Publication Number
WO 2010/054157 A2

(51) International Patent Classification:
E01H 1/12 (2006.01)

(21) International Application Number:
PCT/US2009/063500

(22) International Filing Date:
6 November 2009 (06.11.2009)

(25) Filing Language: English

(26) Publication Language: English

(30) Priority Data:
61/198,442 6 November 2008 (06.11.2008) US
61/217,174 28 May 2009 (28.05.2009) US

(72) Inventor; and
(71) Applicant : **NOONAN, Mark** [US/US]; 55 St. John Place, Suite 201, New Canaan, CT 06840 (US).

(74) Agent: **FUSSNER, Anthony, G.**; Harness, Dickey & Pierce, P.L.C., 7700 Bonhomme, Suite 400, St. Louis, MO 63105 (US).

(81) Designated States *(unless otherwise indicated, for every kind of national protection available)*: AE, AG, AL, AM, AO, AT, AU, AZ, BA, BB, BG, BH, BR, BW, BY, BZ, CA, CH, CL, CN, CO, CR, CU, CZ, DE, DK, DM, DO, DZ, EC, EE, EG, ES, FI, GB, GD, GE, GH, GM, GT, HN, HR, HU, ID, IL, IN, IS, JP, KE, KG, KM, KN, KP, KR, KZ, LA, LC, LK, LR, LS, LT, LU, LY, MA, MD, ME, MG, MK, MN, MW, MX, MY, MZ, NA, NG, NI, NO, NZ, OM, PE, PG, PH, PL, PT, RO, RS, RU, SC, SD, SE, SG, SK, SL, SM, ST, SV, SY, TJ, TM, TN, TR, TT, TZ, UA, UG, US, UZ, VC, VN, ZA, ZM, ZW.

(84) Designated States *(unless otherwise indicated, for every kind of regional protection available)*: ARIPO (BW, GH, GM, KE, LS, MW, MZ, NA, SD, SL, SZ, TZ, UG, ZM, ZW), Eurasian (AM, AZ, BY, KG, KZ, MD, RU, TJ, TM), European (AT, BE, BG, CH, CY, CZ, DE, DK, EE, ES, FI, FR, GB, GR, HR, HU, IE, IS, IT, LT, LU, LV, MC, MK, MT, NL, NO, PL, PT, RO, SE, SI, SK, SM, TR), OAPI (BF, BJ, CF, CG, CI, CM, GA, GN, GQ, GW, ML, MR, NE, SN, TD, TG).

Published:

— *without international search report and to be republished upon receipt of that report (Rule 48.2(g))*

(54) Title: DEVICES AND METHODS RELATING TO THE CLEANUP OF LEAVES, TO POURING OR FILLING NON-LIQUIDS, AND/OR TO RECONFIGURABLE FUNNELING APPARATUS

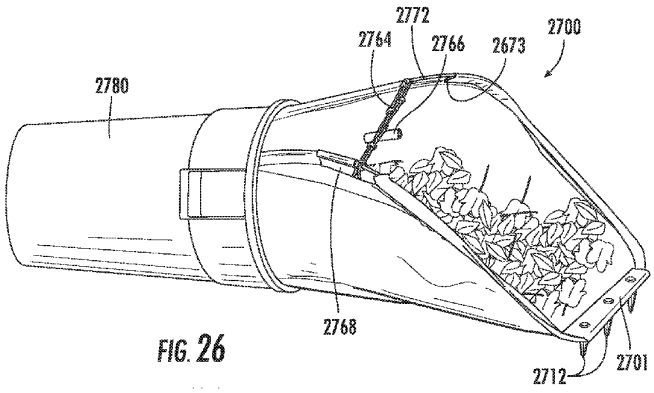

FIG. 26

(57) Abstract: Exemplary embodiments are disclosed of devices and methods, which may aid in leaf and debris (or other particles) cleanup or transport sometimes used in conjunction with tarps and/or filling of garbage cans and garbage/leaf bags, etc.

WO 2010/054157 A2

DEVICES AND METHODS RELATING TO THE CLEANUP OF LEAVES, TO POURING OR FILLING NON-LIQUIDS, AND/OR TO RECONFIGURABLE FUNNELING APPARATUS

CROSS-REFERENCE TO RELATED APPLICATIONS

[0001] This application claims the benefit of United States Provisional Application No. 61/198,442 filed November 6, 2008 and United States Provisional Patent Application No. 61/217,174 filed May 28, 2009. The entire disclosures of the above applications are incorporated herein by reference.

FIELD

[0002] The present disclosure generally relates (but not exclusively) to devices and methods associated with or relating to the pick-up or cleanup of leaves, debris, other materials, etc., to pouring or filling non-liquids, and/or to reconfigurable funneling apparatus that are reconfigurable into a funnel-like configuration or a substantially flat configuration, and vice versa.

BACKGROUND

[0003] This section provides background information related to the present disclosure which is not necessarily prior art. For example, set forth in this section are various drawbacks associated with existing methods for cleaning up leaves that the inventor hereof has recognized.

[0004] There are various types rakes, leaf and debris cleanup or pickup systems, which apply to many different types of materials to be cleaned or cleared. As used herein, the terms “leaf,” “leaves,” “debris,” and other like terms are intended to broadly or generically refer to and include any of the wide range of various types of debris or materials that may be cleared. Similarly, the terms “cleanup,” “pickup,” and other like terms are also intended to broadly or generically refer to and include raking, scooping, grabbing, or otherwise cleaning up debris or materials.

[0005] There are various ways for cleaning or picking up leaves. For example, two-sided rakes that work like a large clamshell may be used to grab, pickup, and release leaves. Similarly, claw-like gloves may be worn over a user’s hands to create tines similar to small rakes to also grab and pickup more leaves or debris than naked hands alone. Fixed-sized funnels, hoops or other types of collars may also be used to hold open garbage or leaf bags while filling. As another option, a

net may be used to scoop up leaves. Or, a leaf blower may be used to blow and/or direct leaves into a bag, such as a bag constructed of netting, etc.

[0006] Of course, someone may take a more traditional approach, such as using a standard yard rake, garbage can, and/or tarp for collecting, moving, dragging, or otherwise disposing of leaves and debris. Large leaf rakes, often used in conjunction with tarps, are generally one of the most expedient ways to clear or clean up leaves when the leaves or debris only need to be moved to a curb or piled up without any bagging or placing in garbage cans, etc. In which case, leaves may be raked onto a tarp and then moved in bulk (after loading the tarp with leaves) by dragging or carrying the tarp. For example, the tarp may be moved close to the leaves to be raked such that the leaves only have to be raked short distances. The leaves may then be raked or otherwise moved or piled onto the tarp. After which, the tarp may be moved (*e.g.*, dragged, carried, etc.) to a specified location, such as the curb or leaf pile and emptied there in a variety of manners. For example, the tarp may be emptied by folding and pulling one edge of the tarp over itself and over the debris - continuing to pull the tarp until free of debris (effectively flipping the tarp over in the process).

[0007] In short, bulk leaf collection and transfer with tarps – using rakes in their traditional function - is often the most efficient and fastest means (as compared to existing methods) to clear and move large quantities of leaves, such as by transferring smaller collected piles of leaves onto a tarp, then dragging the much larger quantity after it is loaded onto the tarp (*e.g.*, from the collected pile to the desired location such as the curb or compost pile, etc.). Typically, picking up a pile of leaves in scoop or otherwise is generally not as efficient as raking them onto a tarp and dragging the tarp full of leaves. But a scoop is often required or necessary for disposal. Also, in cases where there may not be as large of a quantity of leaves or debris, loading bags or cans may be efficient or otherwise employed.

[0008] Raking (along with leaf blowing) is typically the most efficient and fastest means (as compared to existing methods) to gather and collect leaves into a pile. The combination with raking them onto a tarp then dragging the tarp is generally the most efficient means of moving leaves longer distances (such as moving leaves to the curb for seasonal collection, as done by many towns in the United States (generally being collected for mass composting). But for filling garbage cans and bags, it is generally more time consuming to lift (and then compress/compact) numerous batches of leaves of debris than to rake directly into a garbage can or bag.

Raking directly into bags tends to be difficult even with rings or other devices that can keep the aperture open. And, the inventor hereof has recognized that the aperture is generally not wide enough for convenient filling of cans or bags by traditional raking directly into the can or bag (especially with round garbage cans and leaf bag openings) as the leaves and similar debris needs to be compressed frequently. For example, a bag or can laying on its side will accept fewer and fewer leaves as the bag or can is being filled by raking leaves into it. Thus, the user may compress or push down the leaves in the bag or can before new leaves may be raked into the bag or can. This is often done by repeatedly up-righting the can to compress the leaves or debris and laying it on its side again.

[0009] As noted above, the inventor hereof has recognized various drawbacks associated with existing methods for cleaning up leaves, etc. In addition to the above noted drawbacks, the inventor hereof has also recognized that one of the difficulties with transferring leaves onto tarps is that the tarp may not stay on the ground fully, either from wind or the force of leaves or the rake hitting the tarp's leading edge. This, in turn, may cause the tarp to fold back on itself, where the leaves are pushed under the tarp or under where the tarp had been before folding back on itself. Thus, the tarp would then need to be dragged back and moved to clear those additional leaves not initially properly loaded onto the tarp. Generally, to address this problem, a user may sometimes find it useful to stand on the tarp edge to keep it flat and sealed against the ground while raking, such as by standing with feet spread apart and then raking back onto the tarp between the user's feet where the tarp is held taut. This combination of steps, however, slows down the work progress and can be awkward, as it: 1) requires the tarp to be moved more frequently to fully clear an area or load a pile and move it onto the tarp, or 2) encumbers work by requiring the user to hold the tarp edge down simultaneously while raking (reducing the range or area that can be reached by the user to rake leaves while simultaneously holding the tarp edge against the ground with feet, other weighted objects or even additional persons).

[0010] There are also a variety of nets, scoops, clam-shell type rakes to facilitate picking up more leaves than by hand or combination of a hand held against a rake. Yet even these existing methods, require raking followed by scooping/lifting then frequent compression of the leaves or debris until the can or bag is sufficiently filled and compressed (where the compression requires the additional step of putting

down the rake, "claws", or scoop to compress then picking back up the device to rake and/or load another batch).

[0011] Devices to keep garbage bags open for use in yard work or garden are available in a variety of fixed sizes. In general, the size (*e.g.*, diameter) of these rims or collars and even funnels is normally fixed and cannot be tailored for a particular use or characteristics of the container being filled. The inventor hereof has recognized that many standard household funnels are not wide enough to use with larger sized particles, such as granules or granular particles, pebbles/stones, and especially, leaf and other garden debris and are not designed to adjust the aperture of the funnel or otherwise size the funnel to fit varying size of containers being filled or type of materials being "funneled."

[0012] Funnels tend to have a fixed diameter, which tends to make smaller funnels incompatible with larger sized particles. For example, funneling large particles by using a relatively small funnel tends to be a slow, time consuming, and difficult (or even unworkable) process. And, often in the case of funnels, the funnel size is not readily available that is appropriate for the materials and the size of the container into which the particles are being funneled, where the containers and particles are larger than what is typical for household liquid funnels. In the case of lawn and garden funnels, they have a fixed aperture/size and are sized only wide enough to pour leaves or debris into the can or bag, such that the funnel size is not nearly wide enough to allow leaves or debris to be raked directly onto the funnel without leaves being raked outside the funnel's opening.

SUMMARY

[0013] This section provides a general summary of the disclosure, and is not a comprehensive disclosure of its full scope or all of its features.

[0014] Disclosed herein are exemplary embodiments of devices and methods, which may aid in leaf and debris (or other particles) cleanup or transport sometimes used in conjunction with tarps and/or filling of garbage cans and garbage/leaf bags, etc.

[0015] In an exemplary embodiment, a funneling apparatus generally includes a sheet having edges defining a perimeter. A stay may be disposed along at least one of the edges and at least partially along the perimeter of the sheet. The funneling apparatus may be reconfigurable between a first configuration in which the sheet is substantially flat and a second configuration in which the sheet is rolled into

at least one funnel-like configuration having a funnel size that is selectively variable as defined by the relative rolled positioning of the generally opposing edges of the sheet. The stay may be operable for helping the sheet remain substantially flat for the first configuration of the funneling apparatus and/or for helping retain the funnel-like configuration for the second configuration of the funneling apparatus by applying outward pressure against an interior portion of a container.

[0016] An exemplary embodiment includes an apparatus attachable along an edge portion of a sheet of material for adding rigidity to the edge portion and/or for securing the edge portion to the ground. The apparatus generally includes an edge device with resilient upper and lower portions. The upper and lower portions may be configured for receiving and compressively clamping onto the edge portion of the sheet of material to releasably attach the edge device to the sheet of material.

[0017] An exemplary embodiment of a funneling apparatus generally includes a sheet of material having a first edge portion and a second edge portion. At least one attachment device may be provided for removably attaching the first edge portion to the second edge portion. The funneling apparatus may be configurable between at least a first configuration in which the sheet is rolled into a funnel-like configuration with the attachment device attaching the first edge portion to the second edge portion, and a second configuration in which the sheet is substantially flat with the first and second edge portion detached from one another.

[0018] An exemplary embodiment includes an apparatus attachable along an edge portion of a sheet of material for adding rigidity to the edge portion and/or for securing the edge portion to the ground. The apparatus generally includes an edge device having at least one opening and at least one spike having upper and lower portions positionable on opposite sides of the edge device. The at least one spike may be engaged with the at least one opening of the edge device for attaching the edge device to the sheet of material. The at least one spike may be configured for driving into the ground.

[0019] Further areas of applicability will become apparent from the description provided herein. The description and specific examples in this summary are intended for purposes of illustration only and are not intended to limit the scope of the present disclosure.

DRAWINGS

[0020] The drawings described herein are for illustrative purposes only of selected embodiments and not all possible implementations, and are not intended to limit the scope of the present disclosure.

[0021] FIG. 1 illustrates an exemplary edge device along an edge portion of the tarp such that the tarp's edge portion is secured to the ground by spikes or anchors passing through openings in the edge device and into the ground according to an exemplary embodiment;

[0022] FIG. 2 illustrates the tarp with the edge device shown in FIG. 1 being lifted by ropes connected to the tarp such that the edge device, which is semi-rigid, is flexed so as to define a generally U-shape together with the tarp's edge portion according to an exemplary embodiment;

[0023] FIG. 3 illustrates the tarp with the edge device shown in FIG. 2 being dragged by the ropes connected to the tarp according to an exemplary embodiment;

[0024] FIG. 4 is a perspective view of an edge device assembled and installed on an edge portion of a tarp with spikes or anchors in place according to an exemplary embodiment;

[0025] FIG. 5 is a perspective view of an edge device according to an exemplary embodiment, and illustrating possible alternate hole patterns and shapes for the spikes or anchors to pass through to engage or secure the edge device to the ground and to an edge portion of a tarp;

[0026] FIGS. 6A and 6B are side views of an edge device shown in an open position and a closed position, respectively, according to an exemplary embodiment in which the edge device may be attached to a tarp and held in a closed position by a spike or anchor having flexible locking fins or wings that are shown re-deployed and/or locked under the bottom member of the edge device in FIG. 6B, where the spike's wings are resiliently compressible for fitting through aligned holes in the edge device and tarp and then to redeploy after passing through the holes;

[0027] FIG. 7 is a side view of an edge device according to exemplary embodiments shown in the closed position, where the edge device includes a living hinge or live hinge section;

[0028] FIG. 8 is a perspective view of an exemplary embodiment of an edge device and a spike or anchor, whereby the edge device may be attached to the

spike and to an edge portion of a tarp by a threaded carriage-type bolt inserted into a hole along the top of the edge device and a matching nut received in an opening in the neck of the spike;

[0029] FIG. 9 is another perspective view of the edge device and spike shown in FIG. 8;

[0030] FIG. 10 is another perspective view of the edge device and spike shown in FIG. 8, and also illustrating an exemplary threaded carriage-type bolt and matching nut that may be used for attaching the edge device to an edge portion of a tarp according to an exemplary embodiment;

[0031] FIG. 11 is a perspective view of an exemplary spike or anchor attachable to an edge device with a carriage-type bolt and matching nut according to an exemplary embodiment, and illustrating an opening in the neck of the spike for receiving the nut and the spike's aligned openings for receiving the threaded portion or stem of the bolt;

[0032] FIG. 12 is a side cross-sectional view of a spike or anchor having flexible locking fins or wings according to an exemplary embodiment;

[0033] FIG. 13 is a cross-sectional view illustrating the shaft and fins of the spike shown in FIG. 12;

[0034] FIG. 14 is a side view of a spike or anchor having an opening in the head of the spike for receiving a rope or other attachment to a tarp and edge device according to an exemplary embodiment;

[0035] FIG. 15A is a side view of an exemplary embodiment of a two-piece spike or anchor having an upper piece with an externally threaded portion that may be screwed into an internally threaded opening of a lower piece to attach the upper and lower pieces of the spike to each other on opposite upper and lower sides of an edge device for securing the spike and edge device to a tarp;

[0036] FIG. 15B is a side view of an exemplary embodiment of a two-piece spike or anchor having a lower piece with an externally threaded stem portion that may be threaded or screwed into an internally threaded opening of an upper piece to attach the upper and lower pieces of the spike to each other on opposite upper and lower sides of an edge device for securing the spike and edge device to a tarp;

[0037] FIG. 15C illustrates an underside of a head or cap of an exemplary embodiment of a two-piece spike or anchor, and showing a threaded nut in a rectangular opening in the underside of the spike's head into which may be threaded

or screwed an externally threaded stem portion of a lower piece of the two-piece spike such as shown in FIG. 15B;

[0038] FIG. 15D is a perspective view showing an exemplary method for attaching a spike or anchor to an edge device with a carriage-type bolt and matching nut according to an exemplary embodiment;

[0039] FIG. 16 illustrates an exemplary embodiment of a funneling apparatus or funnel-type device having a plastic sheet construction shown in a substantially flat configuration, which allows, for example, the funneling apparatus to be readily stored in the flat configuration;

[0040] FIG. 17 illustrates the funneling apparatus of FIG. 16 configured into a funnel-like configuration in which the funneling apparatus may be clipped onto an edge of a container and used for funneling particulates or other materials into the container;

[0041] FIG. 18 illustrates a funneling apparatus according to an exemplary embodiment shown in a substantially flat configuration, which allows, for example, the funneling apparatus to be readily stored in the flat configuration;

[0042] FIG. 19 illustrates the funneling apparatus of FIG. 18 configured into a funnel-like configuration in which the funneling apparatus can be used for funneling particulates or other materials;

[0043] FIG. 20 illustrates an exemplary embodiment of a funneling apparatus in a substantially flat configuration, and also illustrating exemplary ribs and stays that provide structure and support to the funneling apparatus, exemplary handles in the form of a strap, openings/cutouts, and spikes installed to or on pads/grommets along an edge portion of the funneling apparatus;

[0044] FIGS. 21A through 21E are partial views of various exemplary embodiments of funneling apparatus shown in substantially flat configurations and with different alternative shapes and different exemplary locations for placement of one or more edge devices;

[0045] FIG. 22 illustrates an exemplary embodiment of a funneling apparatus in a substantially flat configuration, and also illustrating exemplary ribs and stays, exemplary handle cutouts, and edge devices installed along an edge portion of the funneling apparatus;

[0046] FIG. 23 illustrates an exemplary embodiment of a funneling apparatus shown in a substantially flat configuration, where the funneling apparatus

includes stays for holding the funneling apparatus in a funneling configuration and a stay for helping maintain the funneling apparatus in an open configuration attached to a container;

[0047] FIG. 24 is a perspective view of an exemplary funneling apparatus shown as it is being held in a funneling configuration with at least one stay, and illustrating a forward end portion of the funneling apparatus inserted into a bag for filling the bag;

[0048] FIG. 25 is another perspective view of the exemplary funneling apparatus and bag shown in FIG. 24, and illustrating the exemplary manner by which the bag may be held open by a bag stay according to an exemplary embodiment;

[0049] FIG. 26 is a perspective view of an exemplary embodiment of a funneling apparatus shown as it is being held in a funneling configuration by a stay, and illustrating the funneling apparatus in a horizontal position with its end portion inserted into a garbage can for loading debris or leaves with a rake or other means into the garbage can via the funneling apparatus;

[0050] FIG. 27 is a perspective view of an exemplary embodiment of a funneling apparatus shown as it is being held in a funneling configuration by a stay, and illustrating the funneling apparatus in a vertical position with its end portion inserted into an upright garbage can, whereby the funneling apparatus may be used for compressing or transferring debris from the funneling apparatus to the garbage can and/or for placing leaves into the funneling apparatus to load the leaves into the garbage can;

[0051] FIG. 28 is a perspective view of a funneling apparatus shown in a ready-for-use funneling or carrying configuration, and also illustrating handle cutouts for carrying the funneling apparatus and an edge device and spikes for securing the edge portion of the funneling apparatus to the ground according to an exemplary embodiment;

[0052] FIG. 29 is a perspective view of a funneling apparatus shown in a ready-for-use funneling or carrying configuration, and also illustrating a removable strap for securing the two lateral edges of funneling apparatus to help maintain the funneling apparatus in the rolled-up/funneling/carrying configuration, handle cutouts for carrying the funneling apparatus, and spikes for securing the edge portion of the funneling apparatus to the ground according to an exemplary embodiment;

[0053] FIG. 30 is a perspective view of a funneling apparatus in a ready-for-use funneling or carrying configuration, and also illustrating handle cutouts for carrying the funneling apparatus and an edge device and spikes for securing the edge portion of the funneling apparatus to the ground according to an exemplary embodiment;

[0054] FIG. 31 is a perspective view of an exemplary embodiment of a funneling apparatus shown as it is being held in a funneling configuration by a stay and with its edge portion secured to the ground by spikes frictionally engaged within grommets of the funneling apparatus, and illustrating the funneling apparatus in a horizontal position with its forward end portion inserts into a garbage can for loading debris or leaves with a rake or other means into the garbage can via the funneling apparatus;

[0055] FIG. 32 illustrates an exemplary embodiment of a funneling apparatus being carried by the handle cutouts with the funneling apparatus in a folded configuration suitable for carrying leaves and debris loaded onto the funneling apparatus;

[0056] FIGS. 33 through 35 are perspective views illustrating exemplary embodiments having relatively flat and rigid platforms for mounting spikes along an edge portion of a tarp or funneling apparatus, so as to enable a spike to be inserted into an aperture and be held in place by friction according to an exemplary embodiment;

[0057] FIG. 36 illustrates exemplary embodiments of adjustable length straps suitable for connecting or securing the lateral edges of a funneling apparatus for maintaining the funneling apparatus in a ready-for-use funneling configuration;

[0058] FIG. 37 is a perspective view of an exemplary embodiment in which a collar is used to channel ropes connected to and threaded through holes in spikes or anchors, so as to better tighten the tarp's edges together when dragging/pulling the tarp by the ropes; and

[0059] FIG. 38 is a perspective view of an exemplary edge device and spike or anchor that may be used for attaching the edge device to an edge portion of a tarp and for securing the tarp's edge portion to the ground according to exemplary embodiments.

DETAILED DESCRIPTION

[0060] Example embodiments will now be described more fully with reference to the accompanying drawings.

[0061] The Background section above sets forth various drawbacks associated with existing methods for cleaning up leaves, etc. that were recognized by the inventor hereof. In view of these drawbacks, the inventor hereof set out to develop methods and devices for cleaning up leaves, etc., which may provide improved efficiency, convenience, etc. Accordingly, various exemplary embodiments are disclosed herein of devices and methods that may help improve efficiency and convenience when cleaning up leaves and/or debris using tarps, garbage cans, bags, etc.

[0062] As disclosed herein, some exemplary embodiments may enable efficient loading of leaves onto a tarp by providing a readily attachable and detachable edge device. The edge device may secure and readily seal (and unseal) the tarp's edge portion to the ground to facilitate debris and leaf loading onto the tarp, such as with a rake or other tools/methods. The edge device may be relatively lightweight, flexible, and be securable to the ground just by stepping on the edge device in order to drive spikes or anchors (*e.g.*, removably attached to or integral with the edge device, etc.) into the ground. With the edge device anchored into the ground, the edge device may thus hold the tarp's edge portion down against the ground, for example, to reduce both the tarp from being blown around in high wind gusts and/or to generally prevent leaves from being raked under the tarp (that, as mentioned above, would have to be re-raked later after the tarp is re-positioned).

[0063] According to various aspects of the present disclosure, there are provided various exemplary embodiments of leaf and debris cleanup tools. Further aspects relate to methods of cleaning up leaves and garden-related debris by loading onto a tarp to be moved and/or by loading or filling garbage cans, plastic or paper bags, other containers, etc. Additional aspects relate to methods of removing leaves and debris with a traditional rake to fill or load a tarp, garbage can, bag, etc. more efficiently (including compressing debris materials in cans or bags to more fully load them with materials or debris, especially when such materials are more readily compressed).

[0064] Aspects of the present disclosure also generally relate (but not exclusively) to devices and methods relating to the pick-up or cleanup of leaves,

debris, other materials, etc. and/or to pouring or filling non-liquids. For example, disclosed herein are exemplary devices that may be used in conjunction with tarps, garbage cans, garden bags, leaf bags, etc. used for yard cleanup and other large area debris cleanup, including the filling of garbage cans, bags, other containers or vessels, etc. As disclosed herein, exemplary devices and methods are designed to be used with a leaf rake (or other tools) to collect leaves and other debris and load into garbage cans or bags (or other containers), onto tarps for moving or loading (usually by dragging), or other loading/disposal methods.

[0065] Other aspects of the present disclosure generally relate (but not exclusively) to funneling apparatus or devices that can be reconfigured between a funnel-like configuration (*e.g.*, for funneling leaves, debris, other materials, etc.) and a substantially flat configuration (*e.g.*, for conveniently storing the funneling apparatus, etc.). As disclosed herein, exemplary funneling apparatus may include features for allowing the funnel size (*e.g.*, diameter of either or both ends, etc.) to be selectively adjustable and tailored for a particular application to accommodate, for example, different types and sizes of garbage cans, garbage bags, leaf/garden bags, etc.

[0066] Disclosed herein are exemplary embodiments of devices attachable to generally flat materials (*e.g.*, tarps, plastic sheets, and other similar structures). When attached to a tarp, for example, an edge device disclosed herein may help secure the tarp to the ground, for example, to prevent it from blowing or being moved or lifted when raking leaves or moving debris onto the tarp. Additional embodiments include such an edge device that may be clamped onto a tarp's edge portion edge by compressing two sides of the edge device (*e.g.*, sides having a generally V-shaped cross section, etc.) about the tarp's edge portion and then securing the two sides together by spikes or anchors, which spikes are driven temporarily into the ground (*e.g.*, by stepping on them, etc.). The spikes can then be removed from the ground by subsequently lifting or pulling, such as by pulling upwardly on the tarp or a rope attached to the tarp or spikes (securing directly to the tarp). In an exemplary embodiment, an edge device includes two sides connected by a thinner and/or more flexible section to enable this "V" shape to close and be secured closed with one or more locking spikes or anchors, which also function to secure the tarp and edge device to the ground. Such edge devices may be used in conjunction with rollable or adjustable size funneling apparatus or devices which can, likewise, be used to permit raking or pushing leaves onto such funneling apparatus.

[0067] An exemplary edge device may be hard or semi-rigid and be removably attachable to a tarp or similar device. The edge device may anchor the tarp securely to the ground during raking or otherwise moving leaves or debris onto the tarp (before dragging or otherwise moving leaves or debris from the tarp to a destination). The edge device may also be relatively flexible along its length, for example, to allow the edge device to be bent or formed into a generally "U" shape as disclosed herein. At least a portion of the edge device may have a cross section roughly shaped like the letter "V". The edge device may include a thin section at, adjacent, or remotely spaced apart from the apex of the "V", where the thin section allow for the opening and closing of the "V" and tightening or clamping about an edge portion of a tarp (or other flat material) to secure the edge device to the tarp's edge portion. Further, an edge device may be constructed to have numerous spikes or anchors as an integral component part of the edge device. That is, the edge device and spikes may be manufactured or formed (*e.g.*, injection molding, etc.) so as to have a monolithic or single component construction. Alternatively, the spikes may be removably attachable to the edge device such that the spikes themselves or mechanical fasteners for attaching the spikes pass through openings (*e.g.*, holes, etc.) in the edge device and/or in the tarp's edge portion that is captured between the portions of the edge device forming the "V" shape. The portions of an edge device forming the "V" shape may also be referred to herein as a "V-edge" for convenience only and not for purposes of limitation, so as to efficiently identify or distinguish the V-edge of an edge device form an edge or edge portion of a tarp or other item. The V-edge may be configured such that it has a cross-sectional curve to it so as it extends out from the tarp edge it also curves downward in its installed and "in-use" position. For example, the top portion of the V-edge may have a convex curvature so that it is less likely a leaf rake or other object would catch the edge device and lift the edge device and tarp during use. The convex curvature may also permit the edge device to seal against the ground more effectively, as it would touch the ground with an attack angle versus horizontal, which may thus compress, for example, less grass under the edge device and permit the edge device to sink deeper and generally, attach more securely. Thus, the installed edge device creates an outwardly looking convex surface when seen from above in its in-use position, and it is intended that, when anchored by spikes, the edge device and tarp edge portion to which it is secured will be more prone to remain secured to and sealed against the ground or lawn surface, reducing the

amount of leaves and debris from getting under the tarp while raking debris and/or leaves onto the tarp. Alternatively, other exemplary embodiments include an edge device with a different cross-section or profile. For example, another exemplary embodiment includes an edge device that is single-sided or one-sided (e.g., edge device 3900 shown in FIG. 38, etc.). A further exemplary edge device is configured to have a profile resembling a "check mark," etc.

[0068] In various exemplary embodiments, an edge device is designed to be temporarily secured, along with the tarp, to the ground. But in some embodiment, the edge device is also intended to be readily lifted out by pulling up the tarp and/or edge device and/or a rope or other fastener attached to the tarp and/or edge device. This action of pulling up would also pull the spikes or anchor up and out of the ground. A rope may be secured to the tarp directly. But a rope may also be secured directly to an edge device attached to the tarp. In either case, the rope whether attached to the tarp, edge device, or both may facilitate and make it easier to pull and drag the tarp when filled with leaves.

[0069] An edge device disclosed herein may be sufficiently flexible such that it can flex when the tarp's edges are lifted and gathered after the spikes are released from the ground. The edge device may be made of a material that allows the edge device to be relatively easily bent from a straight section into a "U" shape (along its length) facilitating the tarp being able to be dragged through fence gates or through areas that are narrower than the length of the edge device in its straight position (assuming the edge device was installed straight across the leading edge of the tarp being dragged or pulled).

[0070] The spikes, stakes, nails, anchors, etc. that may be used to anchor or secure an edge device and tarp edge portion to the ground (while loading the leaves onto the tarp) may be configured to be received and accepted through openings (*e.g.*, holes, etc.) in the edge device and/or in the tarp. For example, holes may be stamped, punched, or otherwise formed in the edge device and/or in the tarp for receiving the spikes.

[0071] Various exemplary embodiments may also include one or more spikes having have openings (*e.g.*, holes, etc.) formed or molded into a rounded or other shape head of the spike to allow a rope to be threaded through the head of the spike through the opening. This would enable a rope to be attached to the spike(s) holding the edge device to the tarp. Alternative embodiment may include one or more

spikes that have an exposed neck beneath the head (when installed just beneath an edge device) that could accept a rope, cord, etc. for pulling the tarp.

[0072] Also disclosed herein are funneling apparatus and devices. In an exemplary embodiment, a funneling apparatus includes a sheet of material having a first edge portion and a second edge portion. At least one attachment device is provided for removably attaching the first edge portion to the second edge portion (*e.g.*, to form a funnel shape, etc.). The funneling apparatus includes a first configuration in which the sheet is rolled into a funnel-like configuration with the attachment device attaching the first edge portion to the second edge portion. The funneling apparatus can also be configured into a second configuration in which the sheet is substantially flat with the first and second edge portion detached from one another. The attachment device or other device (*e.g.*, clip, etc.) may be provided for securing, hooking, or holding with friction (or other means) the funneling apparatus to the garbage can or bag. In some embodiments, the funnel shape might also be accomplished with a strap (*e.g.*, fixed length strap, an adjustable length strap, etc.) or similar device to secure the funneling apparatus in the funnel shape without the two free edge portions touching or meeting. For example, one end portion of a strap may be fixedly attached or secured (*e.g.*, adhesively bonded, stitched, mechanically fastened, etc.) to one side or edge portion of the funneling apparatus and the strap's other end portion is releasably attachable (*e.g.*, via hook and loop fasteners, etc.) to the second side or edge portion of the funneling apparatus. The funneling apparatus may also be configured such that it may be placed into a sling-type shape more suitable for carrying smaller loads than dragging of heavier larger loads.

[0073] The funneling apparatus may include features that allow the funnel size to be selectively adjusted and tailored for a particular application. The funneling apparatus may be used, for example, as a leaf removal device with or without an edge device. For example, the funneling apparatus may be used in conjunction with an edge device when loading leaves onto the funneling apparatus in the flat configuration. Or, for example, the funneling apparatus in the funneling confirmation may be inserted into a garbage can or bag to facilitate a faster and easier way to more fully fill a garbage can or bag (especially when the debris, leaves etc. can be readily compressed in order to fit more into the garbage can or bag).

[0074] Additional exemplary embodiments of a funneling apparatus provide a rollable tarp or sheet that may be rolled into and held in a funneling

configuration, such as by inserting into a garbage can, by one or more attachment devices (*e.g.*, straps, etc.), by one or more stays (*e.g.*, one or more rods, tubes, and/or dowels with a round or circular cross section). The rollable tarp or sheet may be rolled into the funneling configuration and inserted into and/or secured to a garbage can or leaf bag, to thereby provide a wider opening (*e.g.*, having an adjustable size, etc.) and extension of the can and/or bag, for filling, much like a funnel. The rollable tarp or sheet may also be used alone for smaller quantities of debris in its flat configuration or otherwise). Funnel-type embodiments disclosed herein may be made from flat materials, such as canvas, standard tarp materials (*e.g.*, woven and coated polypropylene, etc.), plastic, PVC (polyvinyl chloride), PET (polyethylene terephthalate), polyethylene, polypropylene, EPDM rubber (ethylene propylene diene Monomer (M-class) rubber), or other materials with similar flexibility and durability properties (in some cases similar to leaf and similar utility tarps) that allows the material to be rolled into a funnel-like shape from a generally flat configuration. In various exemplary embodiments, a funneling apparatus when in the flat configuration may have a generally oval or teardrop shape with the pointed tip section removed when viewed from above. Alternative shapes are also possible, including circular, trapezoidal, a shape with rounded or radiussed corners, etc. As disclosed herein, a funneling apparatus may be rolled then held into the rolled position to form a funnel-like adapter for garbage cans and bags, whereby the funneling apparatus is partially inserted into the bag or can then laid on the ground or surface. With the funneling apparatus secured into its funneling configuration and open at one end (the wider or insertion end), an edge portion of the funneling apparatus might be laying or secured to the ground. For example, an edge portion of the funneling apparatus may be secured to the ground by using an edge device and/or spikes as disclosed herein when the funneling apparatus and can/bag are laying on their side on the ground in a horizontal position. In this example, the funneling apparatus may thus enable a larger quantity of leaves, debris, etc. to be loaded, raked, or pushed into the can/bag by filling the funneling apparatus and unfilled portion of the can or bag more rapidly versus lifting or scooping leaves or debris in discrete amounts into an upright can or bag with or without the funneling apparatus. The leaves or debris after being raked or moved onto or into the funneling apparatus may fill the funneling apparatus with uncompressed leaves or debris even if the garbage can or bag is mostly full, thus permitting the can or bag (along with the funneling apparatus) to be uprighted if

desired with a quantity of debris in the can or bag in combination with the funneling apparatus, and then be further compressed (and in total more leaves than normal would fit by volume in the can or bag). In comparison, filling and compressing leaves in a garbage can or bag tends to be a difficult and time-consuming process as it can only be done in small quantities with nearly full cans or bags. In a sense, the funneling apparatus when installed into the garbage can or bag can temporarily increase its capacity as well as the aperture size when gathering debris. The alternative method is generally loading a smaller quantity of debris at a time (up to or slightly over the rim of the bag or garbage can) and compressing the leaves to make room for another scoop or load. It is typical when filling garbage cans and leaf bags to fill them to near or just over the brim and then compress several times in order to fully load a can or bag. The ability to overfill the garbage can or bag by also filling the positioned funneling apparatus should improve efficiency of this process by enabling fewer "fill and compression cycles."

[0075] Efficiency may also be improved because the funneling apparatus and garbage can or bag may be both laid flat on the ground, which would allow leaves or debris to be raked into the funneling apparatus in bulk rather than lifting smaller quantities by hand or by other devices before compressing in smaller "batches." Raking is more efficient than scooping, lifting, or otherwise picking up leaves or debris in some manner to load an upright bag or garbage can in small "batches." Part of this efficiency comes from the use of gravity to refill the leaves as they are compressed. Specifically, as leaves in the bottom of the funneling apparatus (near the part that is inserted and overlapping the can or bag) are compressed into the can or bag, leaves in the top or widest part of the funneling apparatus naturally fall down towards or even into the can, displacing the leaves that were just compressed further down into the can or bag (in the bottom of the funneling apparatus). Likewise, using the funneling apparatus may also be more efficient than raking leaves onto a tarp then pouring the leaves off the tarp into a bags or garbage can, as that requires one or more extra steps of lifting the tarp to pour the leaves off the tarp and does not extend the fillable volume of the can or bag.

[0076] Other aspects of the present disclosure relate to methods. In an exemplary embodiment, a method generally includes rolling a sheet of material from a substantially flat configuration into a funnel-like configuration. The method also includes removably attaching first and second edge portions of the sheet. Particles can

be funneled using the sheet in the funnel-like configuration with the first and second edge portions attached to one another. To conveniently store the funneling apparatus, the first and second edge portions can be detached from one another, and the sheet can be unrolled into the substantially flat configuration.

[0077] In another exemplary embodiment, a method generally includes rolling a sheet of material into a funnel-like configuration. The method also includes selectively adjusting the funnel size by selectively overlapping a specific amount of the first edge portion over the second edge portion and then removably attaching the first edge portion to the second edge portion.

[0078] Exemplary embodiments discussed below can be constructed to be used with or fit a wide range of tarps, garbage cans, bags, other containers or vessels, etc. having various configurations (*e.g.*, different shapes, sizes, etc.). Disclosed herein are various exemplary embodiments of edge devices and funneling devices that may be used with each other or independently. The various aspects of the present disclosure may be used individually or in combination with any one or more of the other aspects of the present disclosure. Individual elements or features of a particular embodiment are generally not limited to that particular embodiment, but, where applicable, are interchangeable and can be used in a selected embodiment, even if not specifically shown or described. The same may also be varied in many ways. For example, some (but not necessarily all) embodiments of a funneling apparatus disclosed herein may be used with some means (*e.g.*, an edge device disclosed herein, etc.) for securing an edge portion of a tarp, funnel or scoop to the ground temporarily and quickly (which is easily and readily removed and re-secured).

[0079] With reference now to the figures, FIGS. 1 through 3 illustrate an exemplary embodiment of an edge device 100 attached to an edge portion 104 of a tarp 108. As shown in FIG. 1, spikes, stakes, anchors, etc. 112 are being used to secure the edge device 100 and tarp's edge portion 104 to the ground as the leaves are being piled onto the tarp 108. In this example, the spikes 112 pass through openings in the edge device 100 and tarp's edge portion 104 and extend into the ground.

[0080] FIG. 2 illustrates the tarp 108 with the edge device 100 being lifted by ropes 116 connected to the tarp 108 with the edge device 100 being flexed or bent so as to define a generally U-shape together with the tarp's edge portion 104. In this example, the user may also pull on the ropes 116 to remove the spikes 112 from the ground and/or pull on the ropes 116 to drag the tarp 108 as shown in FIG. 3. The edge

device 100 may be formed from a wide range of materials, which are preferably semi-rigid or resiliently conformable so as to allow the edge device 100 to be bent or flexed into the generally U-shape (FIGS. 2 and 3) but return to a generally flat configuration (FIG. 1) after the user lets go of the ropes 116. The edge device 100 may also include a V-shaped profile and/or convexly curved upper portion as disclosed herein.

[0081] FIG. 4 illustrates an exemplary embodiment of an edge device 200 assembled and installed on an edge portion 204 of a tarp 208 (*e.g.*, flat canvas or other material, etc.) with spikes or anchors 212. In this illustrated example, five spikes 212 are shown. Alternative embodiments may include more or less than five spikes and/or differently configured spikes.

[0082] With continued reference to FIG. 4, the edge device 200 may be formed from a rigid or semi-rigid material(s). The edge device 200 may include a generally "V" shaped profile for receiving the tarp's edge portion 204 within the "V." That is, the tarp's edge portion 204 may be positioned or fit into the open end of the V-shaped portion, and then the "legs" of the V shape may be secured, clamped, tightened, or closed onto the tarp's edge portion 204 to thereby attach or secure the edge device 200 to the tarp 208. In alternative embodiments, the edge device 200 may include a V-shaped portion configured in a closed position with very little space between the two legs forming the V shape. In which case, the V-shaped portion may be installed by first opening the V-shaped portion to allow for positioning of the tarp's edge portion into the V-shaped portion and then allowing the V-shaped portion to automatically close and clamp onto the edge portion of the tarp or other item.

[0083] FIG. 5 illustrates an exemplary embodiment of an edge device 500 having possible alternate hole patterns 514 and shapes for spikes or anchors to pass through to engage or secure the edge device 500 to the ground and to an edge portion of a tarp 508. The tarp's edge portion has been removed from FIG. 5 in order to illustrate the lower portion of the edge device 500. As shown in FIG. 5, the edge device 500 includes three different holes 514 – specifically, a rectangular hole, circular hole, and a cross-shaped hole. Alternative embodiments may include more or less than three holes and/or differently configured holes (*e.g.*, different sizes, shapes, locations, etc.). Also, an edge device may include all identically shaped holes or one or more holes that are differently shaped than one or more other hole(s) in the edge device.

[0084] The edge device 500 also has a curved upper portion 524. When the edge device 500 is installed on the tarp 508 and anchored to the ground, the curved upper portion 524 would be convex such that it is less likely a leaf rake or other object would catch the edge device 500 and lift the edge device 500 and tarp 508 during use. The convex curvature may also permit the edge device 500 to seal against the ground more effectively, as it would touch the ground with a more vertical angle versus horizontal, which may thus compress, for example, less grass under the edge device 500 and permit the edge device 500 to sink deeper and generally, attach more securely. Thus, the installed edge device 500 in this example creates an outwardly looking convex surface when seen from above in its in-use position, and it is intended that, when anchored by spikes, the edge device 500 and tarp edge portion to which it is secured will be more prone to remain secured to and sealed against the ground or lawn surface, reducing the amount of leaves and debris from getting under the tarp while raking debris and/or leaves onto the tarp. Alternatively, other exemplary embodiments include an edge device with a different cross-section or profile. For example, another exemplary embodiment includes an edge device that is one-sided instead of V-shaped. A further exemplary edge device is configured to have a profile resembling a "check mark," etc. Still other exemplary edge devices may have a straight upper portion instead of curved.

[0085] FIGS. 6A and 6B illustrate an edge device 600. As shown in FIG. 6A, the edge device 600 includes one or more holes 614 for receiving one or more spikes 612 (FIG. 6B) and legs 628 and 632. In FIG. 6A, the edge device 600 is shown in the open position such that the legs 628 and 632 define a generally V-shape.

[0086] FIG. 6B illustrates the edge device 600 attached to an edge portion 604 of a tarp 608 according to an exemplary embodiment. As shown in FIG. 6B, the edge device 600 is being held in a closed position by a spike or anchor 612. The legs 628 and 632 of the edge device 600 are being compressively held together in the closed position between the spike's head 636 and locking fins or wings 640. In this example, the locking fins 640 may be resiliently compressible for fitting through aligned holes in the edge device 600 and tarp 608, but the fins 640 may then redeploy or expand outwardly after passing through the holes and beyond the lower leg 628 of the edge device 600.

[0087] FIG. 7 illustrates an exemplary embodiment of an edge device 700 that includes legs 728 and 732 and a living hinge or live hinge section 744. In this

example, the living hinge 744 comprises a thin section of leg 732 that may be configured to enable the legs 728 and 732 to better open for accepting an edge portion of a tarp and then closed down or pinch the tarp's edge portion to secure to it. In other embodiments, the edge device may include the upper leg without a hinged portion or lower leg, such that the edge device's upper leg may be secured to the top of a tarp or object regardless of tarp thickness.

[0088] The living hinge 744 may allow the edge device 700 to be fit securely to various thicknesses of tarps, etc. and/or more readily tighten on the tarp to clamp the tarp. This may also help prevent the spikes from tearing through the tarp when the tarp is being pulled by the edge device 700 or by ropes attached to the edge device 700, as compared to ropes connected directly to grommets or holes in the tarp.

[0089] As shown in FIG. 7, the living hinge 744 is on the point or apex of the V-shape defined by the legs 728, 732. Instead, the living hinge 744 is on the underside adjacent the apex. Locating the living hinge 744 on the underside helps protect the thinner walled section forming the living hinge 744 from a rake or other damage and also provide a stiff edge for sealing the tarp to the ground (reducing the wear or breakage that otherwise could occur if the live hinge was on top or directly at the point or tip of the "V"). This living hinge 744 of thinner, bendable material (*e.g.*, plastic, rubber, etc.) connecting the upper and lower legs 728, 732 allows the edge to be made with less material (plastic, rubber, etc.), whereas not having this flexible section at the apex provides a solid and stiffer apex for a given amount of material.

[0090] Alternative embodiments may include a two-piece edge device where upper and lower pieces are not hinged together, but are attachable to each other such as by spikes (*e.g.*, spikes 612, etc.), tabs, flanges, washer, nut, or other mechanical fasteners, clamping or securing devices, to secure the tarp to an edge device that only includes an upper piece. For example, the edge device may include an upper piece similar to the upper leg 732 of the edge device 700 and without the lower leg 732 and living hinge 744.

[0091] FIGS. 8 through 10 illustrate an exemplary embodiment of an edge device 800 and an exemplary spike or anchor 812. As shown in FIG. 10, the spike 812 may be removably attachable to the edge device 800 by a threaded carriage-type bolt 836 and nut 852. The bolt 836 may be inserted into holes 814 extending through the upper and lower legs 828, 832 that are hingedly connected by living hinge 844. The nut 852 may be inserted into an opening 848 in the neck of the spike 812. The legs

828, 832 may then be compressively forced towards each other for clamping onto an edge portion of a tarp, etc. by threading the bolt 836 into the nut 852. In some embodiments, the tarp may also include holes or grommets into which the bolt 836 is also inserted. In yet other embodiments, the edge device 800 and spike 812 may be constructed such that the spike 812 is an integral component part of the edge device 800. That is, the edge device 800 and spike 812 may be manufactured or formed (*e.g.*, injection molding, etc.) so as to have a monolithic or single component construction.

[0092] In FIGS. 8 through 10, the edge device 800 is shown in a closed position for purposes of illustration as the edge device 800 would be in an open position without the bolt 836 and nut 852. In addition, the living hinge 844 is shown at the apex or point at which the upper and lower legs 828 and 832 are connected to each other. In other embodiments, the living hinge 844 may be spaced apart from the apex such as in the exemplary embodiment shown in FIG. 7. In still other embodiments, the edge device 800 may not include any living hinge such as an embodiment in which the edge device 800 is made of a flexible material (*e.g.*, extruded rubber, EDPM rubber, etc.), which can readily flex and bend without the need for a thinner connecting section to accommodate such bending. Further EPDM or other similar property rubbers can be rolled to be packaged more compactly without dramatically altering the shape after unpacking and unrolling. In addition, EPDM and other rubbers can readily be cut and made into shorter sections as needed or desired for specific uses. Alternative materials may also be used besides rubber. Indeed, any of the various exemplary embodiments disclosed herein may be made by a wide range of manufacturing processes (*e.g.*, extrusion, molding, etc.) and from a wide range of materials, including polypropylene, polyethylene, EPDM rubber, extrudable materials (*e.g.*, extrudable plastics or rubbers, etc.), metals (*e.g.*, aluminum, steel, etc.) fiberglass, other relatively strong but flexible materials, materials that are resistant to permanent deforming or permanent bending, etc.

[0093] Also, the edge device 800 is shown with straight legs 828, 832 to more easily accommodate the spikes 812 and attachment of the spikes 812 perpendicular to the legs 828, 832. Alternatively, other embodiments may include curved legs.

[0094] FIG. 11 illustrates an exemplary spike or anchor 912 that may be attached to an edge device (*e.g.*, 100 (FIG. 1), 200 (FIG. 4), 500 (FIG. 5), 600 (FIG. 6) 700 (FIG. 7), 800 (FIG. 8), 1500 (FIG. 15D), 3900 (FIG. 38), etc.) with a carriage-

type bolt 936 and matching nut 952. As shown, the spike 912 includes an opening 948 in the neck of the spike 912 for receiving the nut 952. The spike 912 also includes aligned openings 956 (which may be internally threaded in some embodiments) for receiving the threaded portion or stem of the bolt 936.

[0095] FIGS. 12 and 13 illustrate an exemplary spike or anchor 1012 that may be attached to an edge device (*e.g.*, 100 (FIG. 1), 200 (FIG. 4), 500 (FIG. 5), 600 (FIG. 6) 700 (FIG. 7), 800 (FIG. 8), 1500 (FIG. 15D), 3900 (FIG. 38), etc.). As shown, the spike 1012 includes a head 1036 and four circumferentially spaced apart locking fins, wings, flanges, or tabs 1040 extending outwardly from the spike's stem or shaft 1042. In this example, the locking fins 1040 may be resiliently compressible for fitting through aligned holes in an edge device and tarp. But the fins 1040 may then redeploy or expand outwardly after passing through the holes and beyond the bottom part of the edge device. In operation, the fins 1040 may help increase the ability of the spike 1012 to remain stuck into the ground. The fins 1040 thus help to better anchor the spike 1012 to the ground and resist the spike 1012 from being pulled out inadvertently, such as when tugging or shaking of the tarp, when struck by the rake when moving leaves onto to the tarp. The fins 1040 may also allow for shorter spikes to be used.

[0096] The spike 1012 may be used, for example, with an edge device having a hole configured with a shape corresponding to the cross-sectional shape of the spike's lower portion shown in FIG. 13. For example, the spike 1012 may be used with an edge device having a cross-shaped hole as shown in FIG. 5.

[0097] By way of example, the spike 1012 may be pushed through holes in an edge device and an edge portion of a tarp, such that the wings 1040 compress as the spike 1012 is pushed through the holes. The wings 1040 redeploy to prevent the inadvertent removal of the spike 1012, until the wings 1040 are manually compressed to release the spike 1012 and enable it to be pulled back through the holes in the edge device and tarp's edge portion. This can help keep the edge device tightly secured on the tarp itself. Because the wings 1040 redeploy after being inserted, the wings 1040 keep the tarp secured between the cavity or gap in the V-shaped portion of the edge device. Thus, the tarp may be pulled by ropes to lift the tarp and simultaneously withdraw the spikes from the ground, as well as even pull the tarp by ropes secured to the edge device (as the tarp is clamped by the edge device with the spikes installed, reducing the problem of the holes created when installing the spikes from being torn

out and the tarp edge portion and tarp being separated). Alternative methods are also disclosed herein to perform one or all of these various functions.

[0098] FIG. 14 illustrates an exemplary spike or anchor 1112. As shown, the spike 1112 includes a hole 1138 through a generally rounded head 1136 of the spike 1112. In operation, a rope, cord, etc. may be threaded through the hole 1138. See, for example, FIG. 37 illustrating a rope 3816 threaded through holes 3838 in the heads 3836 of the spikes 3812. In an exemplary embodiment, the hole 1138 may have a diameter of about one half inch. This dimension (as are all dimensions) is for purposes of illustration only and not for limitation, as embodiments disclosed herein may be configured differently, including different sizes, shapes, materials, etc.

[0099] FIG. 15A is an exemplary embodiment of a two-piece spike or anchor 1212. As shown, the spike 1212 includes an upper piece 1236 with an externally threaded portion 1237 that may be screwed into an internally threaded opening 1241 of a lower piece 1242 to attach the upper and lower pieces 1236, 1242 of the spike 1212 to each other on opposite upper and lower sides of an edge device (*e.g.*, 100 (FIG. 1), 200 (FIG. 4), 500 (FIG. 5), 600 (FIG. 6) 700 (FIG. 7), 800 (FIG. 8), 1500 (FIG. 15D), 3900 (FIG. 38), etc.). The spike 1212 may be used for securing the edge device to a tarp and to the ground.

[0100] FIG. 15B is an exemplary embodiment of a two-piece spike or anchor 1312. As shown, the spike 1312 includes a lower piece 1342 with an externally threaded portion 1341 that may be screwed into an internally threaded opening 1337 of an upper piece 1342 to attach the upper and lower pieces 1336, 1342 of the spike 1312 to each other on opposite upper and lower sides of an edge device (*e.g.*, 100 (FIG. 1), 200 (FIG. 4), 500 (FIG. 5), 600 (FIG. 6) 700 (FIG. 7), 800 (FIG. 8), 1500 (FIG. 15D), 3900 (FIG. 38), etc.). The spike 1312 may thus be used for securing the edge device to a tarp and to the ground.

[0101] FIG. 15C illustrates an underside of a head or cap 1436 of an exemplary embodiment of a two-piece spike or anchor. As shown, a threaded nut 1452 may be inserted into a opening (e.g., a slot, rectangular opening, etc) in the underside of the spike's head 1436 to which may be threaded or screwed an externally threaded stem portion of a lower piece of the two-piece spike (e.g., threaded portion 1341 shown in FIG. 15B, etc.).

[0102] FIG. 15D illustrates an exemplary embodiment of an edge device 1500 and spike 1512. As shown, the spike 1512 may be attached to the edge device

1500 by the carriage-type bolt 1536 and matching nut 1552. When the bolt 1536 is tightened, the spike body, bolt 1536, and nut 1552 are locked together, which also may tighten and clamp the edge device 1500 around a tarp or other material edge. Alternative embodiments may include a differently configured spike, bolt, or nut and/or different method of attaching a spike to the edge device.

[0103] The particular configuration (e.g., shape, size, number of spikes, etc.) for a particular embodiment may vary, depending, for example, on the end use. For example, disclosed herein are other means to create an edge to seal against the ground, such exemplary embodiments in which the spikes are not secured to a single edge device but the spikes are independently secured but structurally connected through a rigid stay or edge built into or added to the tarp along its outer edge. In addition, an edge device disclosed herein (e.g., 100 (FIG. 1), 200 (FIG. 4), 500 (FIG. 5), 600 (FIG. 6) 700 (FIG. 7), 800 (FIG. 8), 1500 (FIG. 15D), 3900 (FIG. 38), etc.) may be sized to have a length between about 36 inches to 84 inches and a width of between about 2 inches to 4 inches. Material thicknesses can vary depending, for example, on the types of materials used. In an exemplary embodiment, the thickness may range from about 1/8 inch to about 5/16 inch, but could be thinner or thicker if desired and depending on types of materials used. In addition, the material thickness of an edge device at the apex or point of the V-shaped portion may be slightly thicker and possibly more if the edge device were only one-sided and/or shaped like a check mark. As another example, the length of an edge device may be between about 48 inches to 60 inches, but may be less depending on commercial packaging and distribution constraints. In a further example, an edge device may have a length of between about 36 inches to 60 inches with holes punched or otherwise fabricated in the edge device to secure the edge device tightly to a tarp, where the holes for the spikes are spaced apart by a distance between about 12 inches to 24 inches. Also, multiple shorter length edge devices may be used (e.g., installed end-to-end in an abutting or spaced apart relationship, etc.) in some embodiments instead of using a single relatively long edge device. The dimensions set forth in this paragraph (as are all dimensions herein) are provided for purposes of illustration only and not for limitation, as embodiments disclosed herein may be configured differently, including different sizes, shapes, materials, etc.

[0104] As noted above, some embodiments include a live hinge construction incorporated into the edge device to enable the edge device to open to

accept a tarp or other material for installation then tighten on that tarp edge or material to secure the apparatus (using one or more spikes as disclosed herein or other device to tighten or clamp the tarp between the upper and lower sides or legs of the edge device. In some embodiments, the living hinge (being the thinnest and weakest section of the edge device) is located on the bottom of the edge device in its installed and in-use position. This helps protect the living hinge from damage or wear from use, for example, from a rake repeatedly hitting the edge as leaves or debris are raked over it and onto the attached tarp or other device.

[0105] In other embodiments, a plurality of edge devices may be made in curved sections, rather than straight (along its length) such that the edge devices together could be secured in one or more sections to form a longer edge and possibly a non-straight edge to match or secure to a variety of tarp shapes.

[0106] Various exemplary embodiments of a funneling apparatus include a sheet of material having a first edge portion and a second edge portion. At least one attachment device is provided for removably attaching the first edge portion to the second edge portion. The funneling apparatus includes a first configuration in which the sheet is rolled into a funnel-like configuration with the attachment device attaching the first edge portion to the second edge portion. The funneling apparatus can also be configured into a second configuration in which the sheet is substantially flat with the first and second edge portion detached from one another (and possibly further folded, depending on materials and construction methods used).

[0107] Accordingly, various embodiments of this invention provide funneling apparatus that can be configured into a funnel-like configuration (e.g., for funneling yard debris, particulates or other materials, etc.) and a substantially flat configuration (e.g., for conveniently storing the funneling apparatus, etc.). The funneling apparatus can also include features that allow the funnel size (e.g., diameter of either or both open ends of the funnel, etc.) to be selectively adjusted and tailored for a particular application (e.g., size of particles being funneled, size of the mouth of the garbage can, garbage/leaf bag, or container into which the particles are being funneled, etc.).

[0108] In another aspect of the present disclosure, a method generally includes rolling a sheet of material from a substantially flat configuration into a funnel-like configuration. The method also includes removably attaching first and second edge portions of the sheet. Debris or particles can be funneled using the sheet

in the funnel-like configuration with the first and second edge portions attached to one another. To conveniently store the funneling apparatus, the first and second edge portions can be detached from one another, and the sheet can be unrolled into the substantially flat configuration or folded, depending on the material and construction/design aspects that might permit folding or flat storing. The method can also include selectively adjusting the funnel size (e.g., diameter of either or both open ends of the funnel, etc.) by selectively overlapping a specific amount of the first edge portion over the second edge portion.

[0109] FIGS. 16 through 19 illustrate exemplary embodiments, which help show that with certain constructions from plastic or tarp-like material combined with stays or stiffeners - a funneling apparatus may be similarly rolled to form a funnel of various configurations and apertures. But then when detached from its rolled configuration for storage or non-use, the funneling apparatus may be further folded to reduce its not-in-use size. The stays or stiffeners may be flexible enough to be rolled for the intended forming of a funnel shape yet be spaced and employed in such a manner to be readily foldable as described, or readily foldable after removing one or more of the stays or stiffeners.

[0110] In a further aspect of the disclosure, a method generally includes rolling a sheet of material into a funnel-like configuration. The method also includes selectively adjusting the funnel size (e.g., diameter of either or both open ends of the funnel, etc.) by selectively overlapping a specific amount of the first edge portion over the second edge portion and then removably attaching the first edge portion to the second edge portion.

[0111] FIGS. 16 and 17 illustrate an exemplary funneling apparatus 1600 according to one exemplary embodiment of the disclosure. As shown, the funneling apparatus 1600 includes a relatively flat sheet or piece of material 1602 (FIG. 16) that can be configured (e.g., rolled, curved, bent, etc.) into a funnel-like configuration (FIG. 17). The sheet 1602 includes first and second edge portions 1604 and 1606 that are removably attachable to one another. The attachment of the edge portions 1604 and 1606 can help retain the sheet 1602 in the funnel-like configuration.

[0112] A wide range of materials can be used for the sheet 1602. In various embodiments, the sheet 1602 comprises a relatively flat piece of plastic or vinyl material, although other suitable materials can also be used, including canvas, sheet plastics etc, in combination with plastic, fiberglass, or other flexible, yet rigid,

stays or supports. In various embodiments, the sheet 1602 is cut or otherwise formed into a generally bulbous shape, such as a generally teardrop shape without the pointed tip. In an example embodiment, the funneling apparatus in its flat configuration may be shaped like an oval (e.g., see shapes shown in FIGS. 20, 21, and 23, etc.) with one end narrower so as to better form the narrow end of the funnel, to fit into containers for filling and loading. This exemplary embodiment 1600 may also include a somewhat more pointed (but still rounded) tip on the leading and wide end of the funnel (as opposed to more straight), for example, to accommodate an outer stay design, where the more pointed (or extended) leading tip or edge facilitates permitting or allowing a wider section of the leading edge, for example, to more easily be held flat when laid on the ground horizontally.

[0113] The sheet 1602 can be provided in one or more various colors. The sheet 1602 can also be opaque, translucent, transparent, reflective, combinations thereof, etc. In one exemplary embodiment, the sheet 1602 is at least substantially transparent in order to allow the user to view the material as it is being funneled through the funneling apparatus 1600.

[0114] In various embodiments, the edge portions 1604 and 1606 of the sheet 1602 can be relatively quickly attached and detached from one another. Attaching the edge portions 1604 and 1606 to one another helps retain the sheet 1602 in the funnel-like configuration (FIG. 17). In the illustrated embodiment, each edge portion 1604 and 1606 includes a respective mating portion 1608 and 1610 (e.g., strips or patches, etc.) of a hook and loop closure system (e.g., Velcro hook and loop fasteners, etc.). Alternatively, a wide range of other suitable devices and methods can be employed for removably attaching the first edge portion 1604 with the second edge portion 1606, such as magnets, clasps, buttons, latches, adhesives, snaps, etc. In addition, the strips 1608 and 1610 can be attached to the sheet 1602 using adhesives, tape, glue, among other suitable methods.

[0115] The funneling apparatus 1600 can also include means for selectively adjusting the funnel size, such as the inner diameter of either or both open ends 1612, 1614 of the funneling apparatus 1600. For example, the inner diameter of the funneling apparatus 1600 may be increased to allow for more rapid funneling of larger more coarse particles and/or for pouring into a wider mouthed container. Or, for example, the outer diameter of the end 1602 of funneling apparatus 1600 may be

decreased in order to allow the end 1602 to be inserted into a relatively small mouth of a container.

[0116] The size of the funneling apparatus 1600 is determined in part by the extent to which the first edge portion 1604 overlaps the second edge portion 1606. Increasing this overlap decreases the size of the funneling apparatus 1600, and vice versa. In one embodiment, the first edge portion can include a single generally continuous Velcro® strip extending inwardly from the first edge portion. In another embodiment, the first edge portion can include any suitable number of (one or more) discrete strips or portions of a hook and loop closure system spaced at different distances inwardly away from the first edge portion to allow varying lengths of the first edge portion to be overlapped over and then be attached to the second edge portion. Accordingly, the size of the funneling apparatus can be adjusted by choosing and then engaging one of the first edge portion's Velcro strips (or similar temporary or removable fasteners) with the mating Velcro portion on the second edge portion. Alternatively, or additionally, other suitable means can be employed to enable selective adjustment to the funnel size, such as elastic straps, adjustable straps, hook and loop closures, clasps, etc.

[0117] In the illustrated embodiment of FIGS. 16 and 17, the Velcro strips 1608 and 1610 allow the user to selectively overlap varying amounts of the first edge portion 1604 over the second edge portion 1606, and then removably attach the edge portions 1604 and 1606 to one another. The Velcro strips 1608, 1610 are thus configured (e.g., sized, positioned, etc.) in such a way so as to enable the funneling apparatus 1600 to be selectively adjusted into a variety of cone apertures or funnel sizes. The funnel size (e.g., inner or outer diameter, etc.) of the funneling apparatus 1600 can be selectively adjusted across a range of funnel apertures at either or both open ends 1612 and 1614 of the funneling apparatus 1600. Accordingly, the funneling apparatus 1600 allows a user to funnel dry powders, relatively small objects or particles, and other materials into a wide range of small to medium-sized aperture containers where it would be otherwise difficult to pour the material directly into the container without spilling at least some of the material as it is being poured. These particular aspects of the disclosure relating to selectively adjusting the funnel size (as can all other aspects of the disclosure) can be used individually or in combination with any one or more of the other aspects of the present disclosure.

[0118] As disclosed herein, FIGS. 20, 22-24, 28-30, and 32 show alternative means of securing and overlapping edge portions of a funneling apparatus formed of a tarp material, etc., for example, to enable the funneling apparatus to be more easily carried or lifted by hand such as when the rolled up tarp is being used to carry debris. As shown in FIGS. 24-27 and 31, means may be provided for holding or securing the funneling apparatus in position while in use in conjunction with a garbage can. bag, other container, etc. For example, FIGS. 24 through 27 illustrate exemplary methods of securing a tarp/funneling apparatus in a funneling configuration to a garbage can or bag, using outward pressure or spring tension applied against an interior portion of a container from one or more relatively stays (e.g., fiberglass, steel or other metal, etc.), such as an outer stay in, along, or looped about an outer edge and/or perimeter of the tarp/funneling apparatus. When configured as a funnel and inserted into a garbage can (or bag slid over the funnel end), the outer stay can conform to the can shape (including square cans) or stretch out the bag, thus with friction and tension sufficiently secure the funnel-configured tarp to the inside of the can or bag. The outer stay may be operable for helping the sheet remain substantially flat for a first configuration of the funneling apparatus and/or for helping retain the funnel-like configuration for the second configuration of the funneling apparatus by applying outward pressure against an interior portion of a container (e.g., bag, can, etc.). The outer stay may be configured to tautly conform and apply spring tension outwardly against an internal portion of a container. The outer stay may be operable for helping hold at least a portion of the funneling apparatus against an interior portion of a container regardless of container shape (e.g., cylindrical, rectangular or box-shaped, etc.) and/or remain open in the funnel-like configuration.

[0119] A funneling apparatus may include a bag stay for better securing a bag to the funnel end. For example, a bag stay may extend at least partially across a portion of the funneling apparatus that will be adjacent the mouth of the bag when the funneling apparatus is inserted into the bag. The bag stay may be operable for applying outward pressure against a portion of the bag for helping keep the bag open. The bag stay (which, with the outer stay create a generally D shape when the tarp is in its flat configuration) may create a lip, over which to stretch and slip the end of a bag, in order to provide a more positive engagement (much like when a plastic garbage bag is inserted and stretched over the edge of a garbage can as a liner). In the funnel

configuration when the bag is inserted over the funneling apparatus and in place (as shown in FIGS. 24 and 25), the bag opening is held in a generally D shape with the curved portion of the D formed by the bag stay.

[0120] With reference back to FIGS. 16 and 17, the funneling apparatus 1600 may be provided with a clip 1616 to allow the funneling apparatus 1600 to be clipped onto an edge of a container (e.g., box, bottle, can, etc.) into which particles or other material will be funneled. This clipping feature can help hold the funneling apparatus 1600 in place on the container if, for example, two hands are needed to hold and pour materials from a heavy container (e.g., dog food bag, etc.) into the funneling apparatus 1600. This can also be helpful in the kitchen while cooking, such as when funneling a powder or cut/chopped materials into a mixing bowl. Alternatively, other suitable devices can be employed to allow the funneling apparatus to be attached to the container (e.g., box, garbage bag, can, bottle etc.) into which debris, particles or other material can be funneled. In another embodiment, the funneling apparatus includes a strap configured (e.g., having sufficient length and/or flexibility, etc.) to be wrapped and secured around a portion of the container to thereby retain the position of the funneling apparatus relative to the container as material is being funneled into the container.

[0121] In the illustrated embodiment, the sheet 1602 includes a through-hole 1618 for hanging the funneling apparatus 1600 from a hook or tab. In other embodiments, the sheet 1602 can include other openings in different shapes (e.g., notches, cutouts, etc.) for hanging the funneling apparatus 1600 from a hook or tab. Or, for example, a separate component attached to the sheet can define an opening that allows the funneling apparatus to be suspended from a hook or tab. In yet other embodiments, the funneling apparatus does not include an opening for hanging from a hook.

[0122] These particular aspects of the disclosure relating to the through-hole 1618 (as can all other aspects of the disclosure) can be used individually or in combination with any one or more of the other aspects of the present disclosure.

[0123] In addition to being used for funneling, the funneling apparatus 1600 can be used for other functions and/or purposes. For example, the funneling apparatus 1600 can also be used to clean or scoop spilled materials while the funneling apparatus 1600 is in the substantially flat configuration (FIG. 16). With the materials resting on the sheet 1602, the funneling apparatus 1600 can then be

configured (e.g., rolled, curved, bent, etc.) into the funnel-like configuration (FIG. 17), thus allowing the materials t then be funneled back into a container for storage or disposal.

[0124] FIGS. 18 and 19 illustrate another embodiment of an exemplary funneling apparatus 1700. As shown, the funneling apparatus 1700 includes a relatively flat sheet or piece of material 1702 (FIG. 18) that can be configured (e.g., rolled, curved, bent, etc.) into a funnel-like configuration (FIG. 19). The sheet 1702 includes first and second edge portions 1704 and 1706 that are removably attachable to one another with Velcro strips 1708 and 1710, respectively. These Velcro strips 1708 and 1710 can allow the funnel size to be selectively adjusted and tailored to the particular application. For example, the inner diameter of either or both open ends 1712, 1714 (FIG. 15) of the funneling apparatus 1700 can be increased or decreased, as desired by selectively overlapping varying amounts of the first edge portion 1704 over the second edge portion 1706, and then removably attach the edge portions 1704 and 1706 to one another with the Velcro strips 1708, 1710.

[0125] In this particular embodiment of FIGS. 18 and 19, the funneling apparatus 1700 does not include a clip for attaching to an edge of a container. But the funneling apparatus 1700 does include a through-hole 1718 for hanging the funneling apparatus 1700 from a hook or tab.

[0126] The various funneling apparatus of the present disclosure (e.g., 1600, 1700, etc.) can be provided in various configurations and sizes depending, for example, on the particular application (e.g., size of particles being funneled, size of the mouth of the container into which the particles are being funneled, in the house, for the garden or garage, etc.) in which the funneling apparatus will be used. Accordingly, a funneling apparatus of the present disclosure should not be limited to a particular size or the particular configuration shown in the figures.

[0127] Additionally, a funneling apparatus disclosed herein (e.g., 1600 (FIGS. 16 and 17), 1700 (FIGS. 18 and 19), etc.) may be used to rake or move debris or leaves into garbage cans or bags. As another example, a funneling apparatus may also be used for carrying or transporting leaves that are piled or loaded onto the funneling apparatus, which may possibly be used in conjunction with one or more edge devices and/or spikes according to embodiments disclosed herein. Moreover, the funneling apparatus 1600 and 1700 are illustrated as being used without any edge devices, spikes, stays, or battens. As disclosed herein, other exemplary embodiments

include funneling apparatus that may be used with one or more edge devices, spikes, stays, and/or battens.

[0128] FIGS. 20 through 27 illustrate various exemplary embodiments of funneling apparatus or devices, which may be constructed from relatively flexible, less rigid materials (e.g., canvas type sheet or fabric of woven polyethylene, polypropylene tarp or other similarly durable materials, etc.). The funneling apparatus may include stays or ribs to help hold the funneling apparatus in a funnel-type shape in its rolled configuration. The selectively foldable funneling apparatus may also have several means of holding or support or carrying it when in use and/or when loading leaves, debris, or other materials. Cutouts, stays, and/or inserted rods may be selectively used when various amounts of each of the first and second overlapping edges are overlapped, thus allowing for the funneling apparatus to be securely held or carried in various configurations, for example, to upright the funneling apparatus and garbage can or bag when they are attached and fully loaded. As an example, the funneling apparatus and garbage can or bag may be laying horizontally and loaded by raking leaves, with the cutout handles of the funneling apparatus secured with a removable cord (or similar device) or with the cutout handles overlapped and used to pull/lift upright the joined funnel and garbage can after filling with leaves or debris. The strap or handholds can also be used to further securely hold the funneling apparatus and garbage can or bag while compressing the leaves or debris so that it fits below the top of the can or bag.

[0129] With further reference to FIG. 20, there is shown an exemplary embodiment of a funneling apparatus 1800 in a substantially flat configuration. In this example, the funneling apparatus 1800 includes grommets or pads 1862 with holes 1814 for receiving spikes for holding the edge portion of the funneling apparatus 1800 down to the ground, such as when leaves are being raked onto the funneling apparatus 1800. In other embodiments, the funneling apparatus 1800 may include one or more edge devices as disclosed herein (e.g., 100 (FIG. 1), 200 (FIG. 4), 500 (FIG. 5), 600 (FIG. 6) 700 (FIG. 7), 800 (FIG. 8), 1500 (FIG. 15D), 3900 (FIG. 38), etc.).

[0130] Also shown in FIG. 20, the funneling apparatus 1800 includes a strap or cord 1864 with a handle 1866. The handle 1866 may be configured to be driven or inserted into the ground to help hold the funneling apparatus 1800 in place. Also, the strap 1864 and handle 1866 may be used (e.g., tied to the handle cutouts 1868, etc.) for holding the funneling apparatus 1800 in the funneling configuration in

similar manner to that shown for the funneling apparatus 3000 (see strap 3064 in FIG. 29) and 3200 (see strap 3264 in FIG. 31).

[0131] FIG. 20 also illustrates stays that may be used for holding the edge portions 1804 and 1806 of the funneling apparatus 1800 together, to help retain the funneling apparatus 1800 in a funneling configuration in a manner similar to that shown above for the funneling apparatus 1600 in FIG. 17. By way of example, the stays may comprise portions 1808 and 1810 (e.g., strips or patches, etc.) of a hook and loop closure system (e.g., Velcro hook and loop fasteners, etc.). Alternatively, a wide range of other suitable devices and methods can be employed for removably attaching the edge portions 1804 and 1808 to each other, such as magnets, clasps, buttons, latches, adhesives, snaps, etc. In addition, the strips 1808 and 1810 can be attached to the funneling apparatus 1800 using stitches, adhesives, tape, glue, among other suitable methods.

[0132] The funneling apparatus 1800 may further include interior and exterior ribs 1870 and 1872 such as rods, tubes, or dowels with circular or round cross-sections, etc. In this illustrated example, the interior ribs 1870 may comprise relatively flexible ribs within pockets or sleeves that extend laterally across the funneling apparatus 1800. The exterior rib 1872 may be more stiff and less flexible than the interior ribs 1870. The exterior rib 1872 may be disposed within a pocket or sleeve and extend along the perimeter edge of the funneling apparatus 1800. In this example, the exterior rib 1872 may comprise a single rib or it may comprise a plurality of ribs.

[0133] FIGS. 21A through 21E are partial views of various exemplary embodiments of funneling apparatus 1900, 2000, 2100, 2200, 2300 shown in substantially flat configurations. As shown by FIGS. 21A through 21E, exemplary embodiments may include different shapes for the tarp or other material forming the funneling apparatus, differently configured (e.g., different shapes, sizes, locations, etc.) edge devices, pads and bases, and holes for spikes or anchors, etc.

[0134] FIG. 22 illustrates an exemplary embodiment of a funneling apparatus 2400 in a substantially flat configuration. As shown, the funneling apparatus 2400 includes exemplary interior and exterior ribs 2470 and 2472, exemplary handle cutouts 2468, and edge devices 2401. More specifically, there are two edge devices 2401 installed end-to-end along a front edge portion of the funneling apparatus 2400, and an edge device 2401 along each side edge portion of

the funneling apparatus 2400. The edge devices 2401 may comprise any one or combination of the various exemplary embodiments of edge devices disclosed herein (e.g., 100 (FIG. 1), 200 (FIG. 4), 500 (FIG. 5), 600 (FIG. 6) 700 (FIG. 7), 800 (FIG. 8), 1500 (FIG. 15D), 3900 (FIG. 38), etc.). In other embodiments, the funneling apparatus 2400 may include more or less than four edge devices. For example, the funneling apparatus 2400 may include a single edge device or no edge device in other embodiments. In some embodiments, the funneling apparatus 2400 may include grommets or pads (instead of or in addition to edge devices) for receiving spikes or anchors.

[0135] The interior ribs 2470 may comprise relatively flat rectangular pieces of material that are attached (e.g., stitched, adhesively bonded, etc.) to and extend across the funneling apparatus 2400. Or, for example, the interior ribs 2470 may comprise a differently configured rib (e.g., rod, tube, or dowel with a circular or round cross section, etc.) and/or be disposed within sleeves or pockets of the funneling apparatus 2400. Continuing with this example embodiment, the exterior ribs 2472 may be more stiff and less flexible than the interior ribs 2470. The exterior ribs 1872 may each be disposed along a corresponding side edge portion of the funneling apparatus 2400. In this example, the exterior ribs 2472 comprise two ribs, but other embodiments may include more or less than two exterior ribs.

[0136] FIG. 23 illustrates an exemplary embodiment of a funneling apparatus 2500 shown in a substantially flat configuration. In this example, the funneling apparatus 2500 includes stays for holding the funneling apparatus 2500 in the funneling configuration in manner similar to that shown for the funneling apparatus 3000 (FIG. 29) and 3200 (FIG. 31). As shown in FIG. 23, the funneling apparatus 2500 includes a strap or cord 2564 with a handle 2566 which may be tied to handle cutouts 2568 on opposite sides of the funneling apparatus 2568 to hold the funneling apparatus 1800 in a first funneling configuration. The handle cutouts 2568 may also function as primary handholds for carrying the funneling apparatus 2500 when loaded with leaves, debris, etc. in a manner similar to that shown for the funneling apparatus 3300 of FIG. 32. But the exemplary embodiment of the funneling apparatus 2500 shown in FIG. 23 also includes another set of handle cutouts 2574. The strap 2564 and handle 2566 may be tied or otherwise secured to this second set of handle cutouts 2574 to hold the funneling apparatus 2500 in a second funneling configuration.

[0137] With continued reference to FIG. 23, the funneling apparatus 2500 also includes a stay 2574 (e.g., a flexible stay, etc.) for helping maintain the funneling apparatus 2500 in an open configuration attached to a container in a manner similar to that shown. For example, the stay 2574 may comprise a flexible stay (e.g., fiberglass, steel or other metal, etc.) that applies spring tension such that funneling apparatus 2500 conforms to the can shape (including square cans) or stretch out the bag, thus with friction and tension sufficiently secure the funnel-configured apparatus 2500 to the inside of the can or bag. Additionally, or alternatively, the stay 2574 may comprise an interior stay that creates a lip over which to stretch and slip the end of a bag or other soft container, in order to provide a more positive engagement (much like when a plastic garbage bag is inserted and stretched over the edge of a garbage can as a liner). For example, the stay 2576 when configured into a funnel shape to accept a bag (see, e.g., FIG. 25) may help the bag remain in an open position for loading and, roughly forming an aperture shape comparable to the letter D in this embodiment.

[0138] The funneling apparatus 2500 also includes grommets or pads 2562 for receiving spikes (e.g., spike 912 shown in FIG. 11, spike 1012 shown in FIGS. 12 and 13, spike 1112 shown in FIG. 14, etc.) for holding portions of the funneling apparatus 2500 down to the ground, such as when leaves are being raked onto the funneling apparatus 2500. In other embodiments, the funneling apparatus 2500 may include one or more edge devices as disclosed herein (e.g., 100 (FIG. 1), 200 (FIG. 4), 500 (FIG. 5), 600 (FIG. 6) 700 (FIG. 7), 800 (FIG. 8), 1500 (FIG. 15D), 3900 (FIG. 38), etc.).

[0139] The spike(s) used with the funneling apparatus 2500 may be configured or selected so as to be matched with the particular grommet configuration. Or, some embodiments may include spikes mounted permanently or built into the funneling apparatus. In the illustrated embodiment of FIG. 23, the grommets 2562 include generally round holes 2514. The spikes may be configured with fins whose diameter for their upper portion (just below the head or cap) have notches molded or fabricated into each fin to provide for a snap-in fit of the fin into the grommet. The fins may have one or more sets of such notches so that the fin may engage or removably lock into one or more height positions into the grommet or base of the funneling apparatus. The spike may terminate in a pointed end portion. But the spike may also accommodate having more than one set of notches by incorporating a non-tapering (or closely so) section for the fin sections between the notch sets. This would

enable the spike fins to be inserted into the grommet and engage and snap into place, and if a second set of notches exist, allows the grommet to slide and snap into place (engaging the grommet edge) in another position or height.

[0140] The funneling apparatus 2500 shown in FIG. 23 may be configured differently (e.g., shaped, sized, etc.) depending, for example, on the particular end use (e.g., leaf cleanup, other debris cleanup, etc.). By way of example, the funneling apparatus 2500 may be configured for use in loading leaves and lawn type debris in garbage cans and bags, such that the funneling apparatus 2500 in its flat configuration may have a width dimension A from about 45 inches to about 65 inches in some embodiments, or from about 50 inches to about 60 inches in other embodiments. The width dimension B (the widest point where one of the primary set of handles 2568 is located in FIG. 23) may be from about 70 inches to about 80 inches in some embodiments, or from about 60 inches to about 90 inches in other embodiments. The length dimension C may be from about 72 inches to about 84 inches in some embodiments, or from about 60 inches to about 96 inches in other embodiments. These dimensions (as are all dimensions) is for purposes of illustration only and not for limitation, as embodiments disclosed herein may be configured differently, including different sizes, shapes, materials, etc.

[0141] FIGS. 24 and 25 illustrates an exemplary embodiment of a funneling apparatus 2600 in a horizontal position with its forward end portion inserted into a bag 2680 for filling the bag 2680. In this example, the funneling apparatus 2600 is being held in a funneling configuration by a stay 2664 (*e.g.*, a removable strap, etc.) attached to the exposed portions of an outer stay or exterior rib 2672 at the handle cutouts 2668. A user may thus rake leaves into the open end of the funneling apparatus 2600 for loading leaves into the bag 2680.

[0142] As shown, the outer stay or exterior rib 2672 comprises a rod with a circular or round cross section disposed within sleeves or pockets 2673 extending along the perimeter edge of the funneling apparatus 2600. The outer stay 2672 may be operable for helping the funneling apparatus 2600 remain substantially flat, such as when lying on the ground without its end portion inserted into a can or bag, etc. The outer stay 2676 may also be operable for helping retain the funnel-like configuration of the funneling apparatus 2600 shown in FIGS. 24 and 25 by applying outward pressure against an interior portion of a container (e.g., bag, can, etc.). The outer stay 2676 may be configured to tautly conform and apply spring tension outwardly against

an internal portion of a container. The outer stay may be operable for helping hold at least a portion of the funneling apparatus 2676 against an interior portion of a container regardless of container shape (e.g., cylindrical, rectangular or box-shaped, etc.) and/or for helping the funneling apparatus 2600 remain open in the funnel-like configuration.

[0143] As shown in FIG. 25, the funneling apparatus 2600 includes grommets or pads 2662 for receiving spikes for holding the edge portion of the funneling apparatus 2600 down to the ground, such as when leaves are being raked onto the funneling apparatus 2600. In other embodiments, the funneling apparatus 2600 may include one or more edge devices as disclosed herein (*e.g.*, 100 (FIG. 1), 200 (FIG. 4), 500 (FIG. 5), 600 (FIG. 6) 700 (FIG. 7), 800 (FIG. 8), 1500 (FIG. 15D), 3900 (FIG. 38), etc.).

[0144] The funneling apparatus 2600 also includes a bag stay 2676 (*e.g.*, a flexible stay, etc.), which may help maintain the funneling apparatus 2600 in an open configuration and/or help keep the mouth of the bag 2680. The bag stay 2676 extends at least partially across a portion of the funneling apparatus 2600 that is adjacent the mouth of the bag 2600 when the funneling apparatus is inserted into the bag 2680. The bag stay 2676 is operable for applying outward pressure against a portion of the bag 2680 for helping keep the bag open. For example, the top portions of the bag stay 2676 (as shown in FIG. 25) may apply outward pressure against two generally opposite portions of the bag 2680.

[0145] The bag stay 2676 may comprise a flexible stay (*e.g.*, fiberglass, steel or other metal, etc.) that applies spring tension such that funneling apparatus 2600 conforms to the can shape (including circular or square cans, etc.) or stretches out the bag 2680. The friction, tension, and/or outward pressure applied by the bag stay 2676 and/or outer stay 2672 against the interior of the can or bag may sufficiently secure the funnel-configured apparatus 2600 to the inside of the can or bag. Additionally, or alternatively, the bag stay 2676 may comprise an interior stay that creates a lip over which to stretch and slip the end of a bag or other soft container, in order to provide a more positive engagement (much like when a plastic garbage bag is inserted and stretched over the edge of a garbage can as a liner). For example, the stay bag 2676 when the funneling apparatus is configured into a funnel shape to accept a bag may help the bag remain in an open position for loading and, roughly forming an aperture shape comparable to the letter D as shown in FIG. 25.

[0146] FIG. 26 illustrates an exemplary embodiment of a funneling apparatus 2700 in a horizontal position with its end portion inserted into a can 2780 for loading debris or leaves with a rake or other means into the can 2780 via the funneling apparatus 2700. In this example, the funneling apparatus 2600 is being held in a funneling configuration by a stay (*e.g.*, a strap 2764 with handle 2766, etc.) attached to the exposed portions of the exterior rib 2772 at the handle cutouts 2768. The exterior rib 2772 comprises a rod with a circular or round cross section disposed within sleeves or pockets extending along the perimeter edge of the funneling apparatus 2700. Alternative embodiments may include a differently configuration or mounting arrangement for the exterior rib.

[0147] As shown in FIG. 26, the funneling apparatus 2700 includes an edge device 2701 and spikes 2712. The edge devices 2701 may comprise any one or combination of the various exemplary embodiments of edge devices disclosed herein (*e.g.*, 100 (FIG. 1), 200 (FIG. 4), 500 (FIG. 5), 600 (FIG. 6) 700 (FIG. 7), 800 (FIG. 8), 1500 (FIG. 15D), 3900 (FIG. 38), etc.). The spikes 2712 may comprise any one or combination of the various exemplary embodiments of spikes disclosed herein. In other embodiments, the funneling apparatus 2700 may include more than one edge device. Or, for example, the funneling apparatus 2700 may include grommets or pads (instead of or in addition to edge devices) for receiving spikes or anchors. For example, FIG. 27 illustrates an exemplary embodiment of a funneling apparatus 2800 that includes grommets or pads 2862 for receiving spikes or anchors.

[0148] Also shown in FIG. 27, the funneling apparatus 2800 is being held in a funneling configuration by a stay (*e.g.*, removable strap 2866, etc.). The funneling apparatus 2800 is in a vertical position with its end portion inserted into an upright garbage can 2880. For example, the funneling apparatus 2800 and garbage can 2880 may have first been horizontal (see, *e.g.*, FIG. 26) during loading of the funneling apparatus 2800 and can 2880 and then uprighted to the position shown in FIG. 27. The funneling apparatus 2800 may be used for compressing or transferring debris from the funneling apparatus 2800 to the garbage can 2880 and/or for placing leaves into the funneling apparatus 2800 to load the leaves into the garbage can 2880.

[0149] In addition, the funneling apparatus 2800 as shown in FIG. 27 also includes a side slot or gap 2882 separating or defined by the edge portions of the funneling apparatus 2800. The slot or gap 2882 may allow a user to more easily compress the leaves and/or debris down further with his/her hands, thereby allowing

greater access to reach lower into the can or bag to compress debris further into such container, before ultimately removing the funneling apparatus 2800 from the can or bag when the can or bag is full or sufficiently full.

[0150] FIGS. 28 and 29 illustrate exemplary embodiments of respective funneling apparatus 2900, 3000 shown in ready-for-use funneling or carrying configurations. Each funneling apparatus 2900, 3000 includes handle cutouts 2968, 3068 for carrying the funneling apparatus 2900, 3000. The funneling apparatus 3000 also includes a strap 3064 (e.g., an elastic band, etc.) that may be tied to the exposed portions of the outer loop stay at the handle cutouts 3068 on opposite sides of the funneling apparatus 3000 to hold the funneling apparatus 3000 in the funneling configuration shown.

[0151] As shown in FIG. 28, the funneling apparatus 2900 also includes an edge device 2901 and spikes 2912 for securing the edge portion of the funneling apparatus 2900 to the ground according to an exemplary embodiment. The edge device 2901 may comprise any one or combination of the various exemplary embodiments of edge devices disclosed herein (*e.g.*, 100 (FIG. 1), 200 (FIG. 4), 500 (FIG. 5), 600 (FIG. 6) 700 (FIG. 7), 800 (FIG. 8), 1500 (FIG. 15D), 3900 (FIG. 38), etc.).

[0152] By comparison, the funneling apparatus 3000 shown in FIG. 29 includes grommets or pads 3062 and spikes 3012 engaged therewith for securing the edge portion of the funneling apparatus 3000 to the ground according to an exemplary embodiment. Also shown in FIG. 29, the funneling apparatus 3000 includes a removable strap 3068 for securing the two lateral edges of funneling apparatus 3000 to help maintain the funneling apparatus 3000 in the rolled-up/funneling/carrying configuration.

[0153] FIG. 30 illustrates an exemplary embodiment of a funneling apparatus 3100 shown in a ready-for-use funneling or carrying configuration. The funneling apparatus 3100 includes handle cutouts 3168 for carrying the funneling apparatus and an edge device 3101 and spikes 3112 for securing the edge portion of the funneling apparatus 3100 to the ground according to an exemplary embodiment. The edge device 3101 and spikes 3112 may comprise any one or combination of the various exemplary embodiments of edge devices and spikes disclosed herein.

[0154] In this example, the funneling apparatus 3100 also includes stays that may be used for holding the edge portions 3104 and 3106 of the funneling

apparatus 3100 together, to help retain the funneling apparatus 3100 in a funneling configuration in a manner similar to that shown above for the funneling apparatus 1600 in FIG. 17. By way of example, the stays may comprise portions 3108 and 3110 (*e.g.*, strips or patches, etc.) of a hook and loop closure system (*e.g.*, Velcro hook and loop fasteners, etc.). Alternatively, a wide range of other suitable devices and methods can be employed for removably attaching the edge portions 3104 and 3108 to each other, such as magnets, clasps, buttons, latches, adhesives, snaps, etc. In addition, the strips 3108 and 3110 can be attached to the funneling apparatus 3100 using stitches, adhesives, tape, glue, among other suitable methods.

[0155] FIG. 31 illustrates an exemplary embodiment of a funneling apparatus 3200 in a horizontal position with its forward end portion inserts into a garbage can 3280 for loading debris or leaves with a rake or other means into the garbage can 3280 via the funneling apparatus 3200. In this example, the funneling apparatus 3200 is being held in a funneling configuration by a stay (*e.g.*, a strap 3264 with handle 3266, etc.) attached to the exposed portions of the exterior rib 3272 at the handle cutouts 3268. The exterior rib 3272 comprises a rod with a circular or round cross section disposed within sleeves or pockets 3273 extending along the perimeter edge of the funneling apparatus 3200. Alternative embodiments may include a different configuration or mounting arrangement for the exterior rib. In some embodiments, the stay may be attached to the exterior rib 3272 at a position so as to more evenly balance the portion of the funneling apparatus 3200 inserted into the can 3280 and the corresponding loaded section not inserted inside the garbage can 3280, thus inhibiting the can 3280 from tipping over during use.

[0156] FIG. 31 shows one exemplary embodiment of the adjustable strap or stay 3264 that may be used for securing the two edges of the funneling apparatus 3200 in to hold it in the funnel shaped configuration. This exemplary strap 3264 may be rope or webbing (nylon or other weather and sun resistant material), and it may have a relative flat or less round cross section. The rope or webbing may be secured to a tubular handle 3266 or other shaped handle and formed into a loop, and subsequently knotted at intervals to provide a variable means to secure and attach the loop to one handle cutout in the funneling apparatus and through the other before passing through one of the smaller loop sections created by the knots. Thus, by selectively choosing different loops to insert or thread the handle 3266 through, the effective length can be adjusted, thus altering the funnel shape and size.

[0157] As shown in FIG. 31, the edge portion of the funneling apparatus 3200 is being secured to the ground by spikes 3212 frictionally engaged within grommets or pads 3262 of the funneling apparatus 3200. The spikes 3212 may comprise any one or combination of the various exemplary embodiments of spikes disclosed herein. For example, the spikes 3212 may include fins with notches so as to engage the corresponding grommets 3262 at one or more discreet points and keep the spikes 3212 in place (prevent it from inadvertently falling out). In other embodiments, the spikes 3212 may not include fins or notches, but the spikes 3212 may be secured within the grommets 3262 by a friction fit. In other embodiments, the funneling apparatus 3200 may include one or more edge devices.

[0158] After the funneling apparatus 3200 and can 3280 are loaded with leaves or debris, the spikes 3212 may be removed from the ground and the can 3280 may be uprighted (see, *e.g.*, FIG. 27). This also repositions the funneling apparatus 3200 from horizontal to vertical. In the vertical position, the funneling apparatus 3200 may then be used for compressing or transferring debris from the funneling apparatus 3200 to the garbage can 3280 and/or for placing leaves into the funneling apparatus 3200 to load the leaves into the garbage can 3280.

[0159] FIG. 32 illustrates an exemplary embodiment of a funneling apparatus 3300 being carried by the exposed portions of the exterior rib 3372 at the handle cutouts 3368 with the funneling apparatus 3300 in a folded configuration suitable for carrying leaves and debris loaded onto the funneling apparatus 3300.

[0160] FIGS. 33 through 35 illustrate exemplary embodiments having relatively flat and rigid platforms for mounting spikes along an edge portion of a tarp, sheet of material, or funneling apparatus. The spikes 3412, 3512 may be removably inserted into corresponding apertures 3414, 3614 in the pads or bases 3462, 3562, 3662 and be held in place by friction at particular points along a relatively rigid edge of the tarp, sheet of material, or funneling apparatus having an outer perimeter edge stay or rib 3472, 3572 in a sleeve or pocket 3473, 3573. The attachment points near the edge portion of the tarp, sheet of material, or funneling apparatus provide the means to removably secure a spike to keep the tarp, sheet, or funneling apparatus from rolling, tipping, or blowing while being used in the funnel configuration. The exemplary embodiments also may be used as alternatives to an edge device disclosed herein, where the stay in combination with the pads and spikes together form a relatively rigid edge with accompanying spikes to seal either the flat tarp, sheet of

material, or funneling apparatus to the ground. FIG. 33 illustrates relatively rigid pads or bases 3462 having holes 3414 through which the spikes 3412 may be inserted and held in place with friction. The holes 3414 are shown with a cross or t-shape, but other shapes may also be used for frictionally or positively engaging the spikes 3412 within the holes 3414. FIG. 34 illustrates pads or bases 3562 that have generally round or oval holes such that the spikes 3512 could be secured with friction or with corresponding notches on the fins of the spikes to positively engage the holes in the pads 3562 at a predetermined point on the spikes, such as at a point that would provide the spikes to be mostly or fully inserted. FIG. 35 illustrates an exemplary embodiment for providing a base or pad 3662 to secure a spike, where the base or pad 3662 would wrap around the outer stay/rib and positively engage (*e.g.*, snap together, etc.) to itself through the tarp, sheet of material, or funneling apparatus in a manner similar to how a grommet might be secured. These exemplary pads, based, or grommets shown in FIGS. 33 through 35 may be constructed from a wide range of materials, such as steel, aluminum, plastics, polypropylene, polyethylene, among other suitable materials.

[0161] FIG. 36 illustrates exemplary embodiments of adjustable length straps 3764A and 3764B with handles 3766A and 3766B. The straps 3764A and 3764B and handles 3766A and 3766B may be used for connecting or securing the lateral edges of a tarp or funneling apparatus for maintaining the tarp or funneling apparatus in a ready-for-use funneling configuration. As shown, the strap 3764B may be secured or tied (*e.g.*, sheep heads knot, etc.) to a stay or rib 3772 of a tarp or funneling apparatus at a handle cutout 3768. The strap 3764B may then be relatively easily and removably secured to the stay or rib 3772 along the second edge of the tarp or funneling apparatus by looping the handle 3766B back through one of the smaller loops of the strap 3764B created with the knots 3769 (which knots may be added to the strap 3764A to form the strap 3764B). Other embodiments may include the strap 3764A without any knots 3769 being used to secure or hold the lateral edges of a tarp or funneling apparatus for maintaining a ready-for-use funneling configuration.

[0162] The exemplary embodiment illustrated in FIG. 36 may provide reduced simplicity, product longevity, and commercial costs for providing a removable and adjustable strap with just two parts: the strap (*e.g.*, rope, etc.) and the handle. As shown by the strap 3764B, knots 3769 may be added to the strap 3764A to create additional adjustment points into which the handle 3766A, 3766B may be

inserted like a button through a button hole (after being wrapped around the second stay or exposed rib portion as shown in FIG. 26). Alternative embodiments, however, may include different means for securing the sides of a funneling apparatus to each other, including Velcro or other hook and loop fasteners, webbing, sewn parts, combinations thereof, etc. that may in some embodiments also provide length adjustability and relatively quick attachment/removal.

[0163] FIG. 37 shows an exemplary embodiment of a funneling apparatus 3800 including an edge device 3801 and spikes 3812. The edge devices 3801 may comprise any one or combination of the various exemplary embodiments of edge devices disclosed herein (*e.g.*, 100 (FIG. 1), 200 (FIG. 4), 500 (FIG. 5), 600 (FIG. 6) 700 (FIG. 7), 800 (FIG. 8), 1500 (FIG. 15D), 3900 (FIG. 38), etc.). The spikes 3812 may comprise any one or combination of the various exemplary embodiments of spikes disclosed herein, such as spike 1112 shown in FIG. 14.

[0164] As shown in FIG. 37, the spikes 3812 include holes 3838 through the heads 3836 of the spikes 3812. Ropes 3816 are threaded through the holes 3838 in the heads 3836 of the spikes 3812. The ropes 3816 are also threaded through a collar device 3890 (*e.g.*, an O-ring, etc.) tethered or attached by tethers 3892 (*e.g.*, rope, cord, etc.) to the spikes 3812 and/or to the tarp or funneling apparatus. Channeling the ropes 3816 through the collar device 3890 and through the holes 3838 in the heads 3836 of the spikes 3812 allows the edges of the tarp or funneling apparatus to be better tightened together when dragging/pulling by the ropes 3816. The collar device 3890 may also help more readily cause the edge device 3801 to form a generally U-shaped configuration for dragging or transport (as also shown in FIGS. 2 and 3).

[0165] As disclosed herein, various exemplary embodiments of a funneling apparatus may include stays in the funneling apparatus, such as a loop stay (*e.g.*, straight length configured as a loop and secured together at the ends, etc.) fabricated in, along, or near the outer edge of the funneling apparatus. In an exemplary embodiment, a loop stay may be fixed inside or sewn into or along the border or edge of the funneling apparatus. A flexible stay may be provided that would conform to the outer shape of the flat, folded, or rolled funneling apparatus.

[0166] In various exemplary embodiments, a funneling apparatus may be used with one or more spikes, one or more edge devices, or other elements (*e.g.*, pads or bases, etc.) that may be removably secured or integral to the funneling apparatus, such as adjacent (*e.g.*, centered along, etc.) an edge of the funneling apparatus. In

various exemplary embodiments, one or more spikes may be configured to be matched to fit with friction or positive engagement within a grommet or other matched pad, base, or plate in order to hold the spikes in place and in a vertical orientation (perpendicular to the surface and edge of a tarp or funneling apparatus). In various exemplary embodiments, a funneling apparatus may include a strap, cord, rope, etc. and/or variable overlapping handles. In various exemplary embodiments, handles (*e.g.*, cutouts, etc.) may be located at about the lowermost and widest section of the funneling apparatus when being carried by the handles.

[0167] In various exemplary embodiments, a funneling apparatus may include one or more edge devices or individually adapted and mounted spikes to enable it to more easily be anchored to the ground while filling with a rake or filling/loading by other means. In some embodiments, the edge devices and/or spikes may be located along the widest edge of the funneling apparatus, which would thus provide a wider entrance for receiving leaves, debris, etc. thus making filling more efficient, quicker, and easier to accomplish. Also, the handles (*e.g.*, cutouts, etc.) may be located opposite the widest funnel section (the section designed to be, and shown, in contact with the ground when filling or loading) so as to provides greater loading capacity, such as when in a horizontal orientation, such as when having its end portion inserted into a horizontal garbage can as shown in FIG. 26 and/or when lifting and carrying debris in the funneling apparatus by the handles as shown by FIGS. 28 through 32.

[0168] Exemplary embodiments of a funneling apparatus disclosed herein may improve the manner in which leaves and/or debris are filled and compressed (by alternatively filling then compressing). In some embodiments, the funneling apparatus may be configured such that when rolled into the funnel shape, there may be a gap separating the sides of the funneling apparatus, and the sides may be held in place by virtue of being inserted into a can or bag. In addition, the funneling apparatus may include a strap to connect and secure the sides in the funnel configuration yet leave room between the side edges to facilitate moving of the leaves or debris from the funneling apparatus into a can or bag being loaded. A strap (adjustable length or otherwise) may provide a lifting point to more easily enable righting the loaded funneling apparatus and can. A lower point of a funneling apparatus may be configured such that the gap between the sides varies creating a roughly V-shaped gap or slot (in such embodiments the funnel shape would not comprise a 360 degree full

funnel). The V-shaped gap may enable the user to more easily compress the leaves and/or debris down further with his/her hands, thereby allowing greater access to reach lower into the can or bag to compress debris further into such container, before ultimately removing the funneling apparatus from the can or bag when the can or bag is full or sufficiently full. Exemplary embodiments are illustrated in FIGS. 27 and 31 that include features relating to a gap or slot, which gap or slot is determined, at least in part, by the shape of the funneling apparatus in the flat configuration.

[0169] Also disclosed herein are various exemplary embodiments (*e.g.*, FIGS. 23, 27, and 29, etc.) that provide for spikes to be secured to or along an edge of a funneling apparatus or tarp. For example, instead of a continuous length (*e.g.*, an edge device which may be used in some embodiments), spikes may be secured and attached at specific points along or on the edge of the tarp or funneling apparatus. In various exemplary embodiments (*e.g.*, FIG. 23, etc.) one or more stays (*e.g.*, ribs, etc.) may be along an outer edge of a tarp or funneling apparatus to reinforce and make the edge more rigid. This, in turn, also helps better maintain the spike positioning and separation, as the semi-rigid outer rim stay would, in combination with the spikes form a spiked edge, which would function together similar to an edge device as disclosed herein. Spikes could be attached in a variety of means to the edge of the tarp or funneling apparatus, such as by a friction fit, positive interference or even tightened on (*e.g.*, two-piece spikes such as shown in FIG. 15, etc.). In an exemplary embodiment (*e.g.*, FIG. 23, etc.), the stay in the outer edge of the tarp or funneling apparatus (when the spikes are removed and not securing the tarp or funneling apparatus to the ground) can facilitate the folding or storing of the tarp or funneling apparatus in a variety of methods, including twisting, then folding into smaller loops to reduce the overall width or diameter. This exemplary method of storage might be inhibited or prevented if a relatively long, rigid edge device were used. Also, a stay along the outer edge of the tarp or funneling apparatus might also be configured for providing some degree of tautness to the tarp or funneling apparatus. This tautness, in turn, might tend to help keep the spikes in the vertical position when the tarp or funneling apparatus is laying flat on the ground. The tarp or funneling apparatus with an outer stay may also be augmented with various larger or extended grommet type elements near the outer stay or edge (and even secured to the outer stay) to ensure the spikes tend to stay more vertical, to ease insertion into the ground by stepping on the

spike to insert it into or engage the ground and, thus, removably or temporarily secure the edge while loading leaves or debris.

[0170] Having a loop stay in the outer edge in various exemplary embodiments (*e.g.*, FIGS. 23 through 32, etc.) may provide the means to not only keep the tarp or funneling apparatus taught in its various configurations. But the outer edge loop stay may also provide variability in its funnel configuration to adapt to various sized garbage cans and bags, and still provide spring-like tension (and thus friction) to the inside of the can or bag to keep the funneling apparatus or tarp in place during loading or transport. The outer edge loop stay may be constructed of fiberglass (including, epoxy or polyester resin, etc.), tempered steel, or other relatively rigid but flexible materials. In various exemplary embodiments, the outer edge loop stay comprises a rod, tube, or dowel with circular or round cross sectional shape, which is configured for keeping outward tension in order to retain the funnel shape and to fit securely with friction fit into garbage cans and bags thus providing a wide range of funnel sizes in order to adapt to a wide range of sized cans and bags. Various exemplary embodiments may include more than one stay along the edge to create a rigid but flexible outer edge onto which to secure spikes and adapters such as standard (or specialized) grommets to accept spikes (which more readily would be held in their perpendicular position relative to the tarp or funneling apparatus).

[0171] In some exemplary embodiments, (*e.g.*, FIG. 23 through 25, etc.), one or more additional straight stays are provided that extend across the tarp or funneling apparatus, which may be configured to ease the securing and loading/filling of garbage bags. These one or more stays may be relatively lighter gauge stays capable of being bent or curved into a generally U shape when the tarp or funneling apparatus is rolled into a funnel. The stay(s) may also provide an edge over which the bag can be slid and held in place while loading. The combined result is the garbage bag when installed will stay in place as the bag can be pulled up into place and secured much like garbage bags are pulled over the lip or edge of a garbage can when used as garbage can liners for filling. The stay(s) may be removably inserted or removed but generally the stay(s) does not impede the other functions of the tarp or funneling apparatus in its flat or funnel configurations, though it may be removed for folding into smaller configurations for storage.

[0172] Various exemplary embodiments include stays, battens, stiffening ribs, etc. that help keep the funneling apparatus in its funnel configuration by

inhibiting it from collapsing or folding on itself in operation, while also importantly keeping open a wider aperture or mouth. The wider mouth or aperture may make it easier for leaves, debris, etc. to be poured or received into and/or to pass through the funneling apparatus. The wider mouth may also make it easier for leaves, debris to be compressed through the funneling apparatus and into the can, bag, or other container attached to or being filled or loaded by the funneling apparatus. This wide mouth may be especially important for some debris, especially wet leaves, which tend to not pour very easily.

[0173] In various exemplary embodiments, a funneling apparatus may have a generally trapezoidal shape with rounded surface/corners when in the flat configuration, which may permit an outer stay design to be used. A leading edge of the funneling apparatus may be more pointed and at least one set of the handles (*e.g.*, cutouts, openings, etc.) may be located more forward, such that when the funneling apparatus is installed, for example, in a garbage can and laying flat on the ground and filled with debris or leaves, a strap may be secured at the two handle openings and be used to lift the debris and funneling configuration to its upright position for full loading into the can or bag. The off-center positioning of the handles may enable the funneling apparatus to be better supported or more evenly supported for the portion not inserted into, for example, the garbage can being filled. Various exemplary embodiments may include no handles, only one set of handles, or more than one set of handles.

[0174] In some exemplary embodiments, there may be provided various means of securing a funneling apparatus to a bag or garbage can, such as hooks, clamps, clips, or other means of securing the funneling apparatus to a garbage can or bag to keep the assembly together while filling or moving the device or apparatus along with a can or bag to which it is inserted or secured.

[0175] In various exemplary embodiments, spikes may be retracted from the ground by pulling on a rope, which may be attached directly to the tarp or funneling apparatus (*e.g.*, via grommets in the tarp, etc.) or to the spikes, etc. In various exemplary embodiments, a collar-like device may be used to more readily close the tarp or funneling apparatus into a more U- Shape to gather the ropes through a smaller aperture and pull them more directly in towards the center of the tarp or funneling apparatus. Pulling the rope may also bend an edge device into a U-shape. The tarp or funneling apparatus may be dragged by the ropes, whereby the U-shape

decreases the width of the funneling apparatus and edge device making it easier to pass through fence gates, narrow areas, etc., and generally enable the moving width of the tarp edge to be narrower and more manageable than its width or running length (as when loading the leaves and/or when anchored to the ground or otherwise spread out and flat). The collar device may be tethered to the funneling apparatus or spikes. Or, for example, the collar device may be part of threaded through a larger opening or aperture in a spike's head. For example, the collar device may comprise a relative large opening in the head of a centrally located spike. In this example, the opening may be sized large enough not only to accept more than one rope therethrough, but the opening may be large enough such that the ropes may slide relatively easily through the opening, such as when the ropes are being pulled through the opening to retract the edge device into a U-shape and when the ropes are released such that the ropes pass through the opening in the opposite direction to allow the edge device to flatten out and be re-anchored to the ground.

[0176] Example embodiments are provided so that this disclosure will be thorough, and will fully convey the scope to those who are skilled in the art. Numerous specific details are set forth such as examples of specific components, devices, and methods, to provide a thorough understanding of embodiments of the present disclosure. It will be apparent to those skilled in the art that specific details need not be employed, that example embodiments may be embodied in many different forms and that neither should be construed to limit the scope of the disclosure. In some example embodiments, well-known processes, well-known device structures, and well-known technologies are not described in detail.

[0177] The terminology used herein is for the purpose of describing particular example embodiments only and is not intended to be limiting. As used herein, the singular forms "a", "an" and "the" may be intended to include the plural forms as well, unless the context clearly indicates otherwise. The terms "comprises," "comprising," "including," and "having," are inclusive and therefore specify the presence of stated features, integers, steps, operations, elements, and/or components, but do not preclude the presence or addition of one or more other features, integers, steps, operations, elements, components, and/or groups thereof. The term "V-edge" or reference to "V" or "V-shaped" is a general reference to components or designs that contain a V portion to the design and not necessarily always a literal "V." Further, the "V" shape may be a very narrow space between the two sides of the "V" or even

touching (or closed), but able to be opened, even if its natural or rest position is closed in this way or manner. The method steps, processes, and operations described herein are not to be construed as necessarily requiring their performance in the particular order discussed or illustrated, unless specifically identified as an order of performance. It is also to be understood that additional or alternative steps may be employed.

[0178] When an element or layer is referred to as being "on", “engaged to”, "connected to" or "coupled to" another element or layer, it may be directly on, engaged, connected or coupled to the other element or layer, or intervening elements or layers may be present. In contrast, when an element is referred to as being "directly on," “directly engaged to”, "directly connected to" or "directly coupled to" another element or layer, there may be no intervening elements or layers present. Other words used to describe the relationship between elements should be interpreted in a like fashion (*e.g.*, “between” versus “directly between,” “adjacent” versus “directly adjacent,” etc.). As used herein, the term "and/or" includes any and all combinations of one or more of the associated listed items.

[0179] Although the terms first, second, third, etc. may be used herein to describe various elements, components, regions, layers and/or sections, these elements, components, regions, layers and/or sections should not be limited by these terms. These terms may be only used to distinguish one element, component, region, layer or section from another region, layer or section. Terms such as “first,” “second,” and other numerical terms when used herein do not imply a sequence or order unless clearly indicated by the context. Thus, a first element, component, region, layer or section discussed below could be termed a second element, component, region, layer or section without departing from the teachings of the example embodiments.

[0180] Spatially relative terms, such as “inner,” “outer,” "beneath", "below", "lower", "above", "upper" and the like, may be used herein for ease of description to describe one element or feature's relationship to another element(s) or feature(s) as illustrated in the figures. Terms such as “front”, “back”, “rear”, “bottom” and “side”, describe the orientation of portions of the component within a consistent but arbitrary frame of reference which is made clear by reference to the text and the associated drawings describing the component under discussion. Such terminology may include the words specifically mentioned above, derivatives thereof, and words of similar import. Spatially relative terms may be intended to encompass different

orientations of the device in use or operation in addition to the orientation depicted in the figures. For example, if the device in the figures is turned over, elements described as "below" or "beneath" other elements or features would then be oriented "above" the other elements or features. Thus, the example term "below" can encompass both an orientation of above and below. The device may be otherwise oriented (rotated 90 degrees or at other orientations) and the spatially relative descriptors used herein interpreted accordingly.

[0181] Disclosure of values and ranges of values for specific parameters are not exclusive of other values and ranges of values useful herein. It is envisioned that two or more specific exemplified values for a given parameter may define endpoints for a range of values that may be claimed for the parameter. For example, if Parameter X is exemplified herein to have value A and also exemplified to have value Z, it is envisioned that parameter X may have a range of values from about A to about Z. Similarly, it is envisioned that disclosure of two or more ranges of values for a parameter (whether such ranges are nested, overlapping or distinct) subsume all possible combination of ranges for the value that might be claimed using endpoints of the disclosed ranges. For example, if parameter X is exemplified herein to have values in the range of 1 – 10, or 2 – 9, or 3 – 8, it is also envisioned that Parameter X may have other ranges of values including 1 – 9, 1 – 8, 1 – 3, 1 - 2, 2 – 10, 2 – 8, 2 – 3, 3 – 10, and 3 – 9.

[0182] The foregoing description of the embodiments has been provided for purposes of illustration and description. It is not intended to be exhaustive or to limit the invention. Individual elements or features of a particular embodiment are generally not limited to that particular embodiment, but, where applicable, are interchangeable and can be used in a selected embodiment, even if not specifically shown or described. The same may also be varied in many ways. Such variations are not to be regarded as a departure from the invention, and all such modifications are intended to be included within the scope of the invention. The following description of various embodiments is merely exemplary in nature and is in no way intended to limit the invention, its applications, or uses.

CLAIMS

1. A funneling apparatus comprising:

a sheet having edges defining a perimeter;

a stay disposed along at least one of the edges and at least partially along the perimeter of the sheet;

the funneling apparatus reconfigurable between a first configuration in which the sheet is substantially flat and a second configuration in which the sheet is rolled into at least one funnel-like configuration having a funnel size that is selectively variable as defined by the relative rolled positioning of the generally opposing edges of the sheet;

whereby the stay is operable for helping the sheet remain substantially flat for the first configuration of the funneling apparatus and/or for helping retain the funnel-like configuration for the second configuration of the funneling apparatus by applying outward pressure against an interior portion of a container.

2. The funneling apparatus of claim 1, wherein the stay is configured to tautly conform and apply spring tension outwardly against an internal portion of a container, whereby the stay is operable for helping hold at least a portion of the funneling apparatus against an interior portion of a container regardless of container shape and/or remain open in the funnel-like configuration.

3. The funneling apparatus of claim 1 or 2, wherein the funnel size is selectively variable between a plurality of funnel sizes as determined by the size of a gap separating the generally opposing edges of the sheet or the amount by which the generally opposing edges are overlapped.

4. The funneling apparatus of any one of the preceding claims, wherein the sheet comprises a tarp.

5. The funneling apparatus of any one of the preceding claims, wherein the stay comprises a rod having a generally rounded or generally circular cross section.

6. The funneling apparatus of any one of the preceding claims, wherein the stay is disposed along the substantial entirety of the perimeter of the funneling apparatus.

7. The funneling apparatus of any one of the preceding claims, wherein the stay comprises a single stay that forms a continuous loop at or near the perimeter of the sheet.

8. The funneling apparatus of any one of the preceding claims, wherein the sheet has generally rounded corners in which is disposed the stay of the at least one sheet.

9. The funneling apparatus of any one of the preceding claims, wherein the sheet includes at least one sleeve at least partially along the perimeter of the sheet.

10. The funneling apparatus of any one of the preceding claims, wherein:

the edges of the sheet includes forward, rearward, and side edges; and

the funneling apparatus is configurable into:

a first funnel-like configuration in which the sheet is rolled about a first axis such that the side edges are adjacent or overlapped; and/or

a second funnel-like configuration in which the sheet is rolled about a second axis generally perpendicular to the first axis such that the forward and rearward edges are adjacent or overlapped.

11. The funneling apparatus of claim 10, further comprising:

a first pair of handle cutouts adjacent the respective side edges and configured for handling the funneling apparatus in the first funnel-like configuration; and/or

a second pair of handle cutouts adjacent the respective forward and rearward edges and configured for handling the funneling apparatus in the second funnel-like configuration.

12. The funneling apparatus of claim 11, further comprising at least one attachment device removably attachable to:

the first pair of handle cutouts for maintaining the funneling apparatus in the first funnel-like configuration; and/or

the second pair of handle cutouts for maintaining the funneling apparatus in the second funnel-like configuration.

13. The funneling apparatus of any one of claims 1-9, wherein:

the edges of the sheet includes forward, rearward, and side edges; and

the funneling apparatus further comprises:

a first pair of handle cutouts adjacent the respective side edges; and/or

a second pair of handle cutouts adjacent the respective forward and rearward edges; and/or

at least one of the first and second pair of handle cutouts being positioned off-centered for helping balance a load when an end portion of the funneling apparatus is in a container.

14. The funneling apparatus of any one of the preceding claims, wherein at least one of the edges of the sheet is securable to the ground when the funneling apparatus is in the first configuration in which the sheet is substantially flat.

15. The funneling apparatus of any one of the preceding claims, wherein:

the substantially flat sheet has an oval shape that includes a major axis and a minor axis shorter than the major axis; and

the funneling apparatus is configurable into:

a first funnel-like configuration in which the sheet is rolled about the major axis; and/or

a second funnel-like configuration in which the sheet is rolled about the minor axis such that the second funnel-like configuration is shorter and wider than the first funnel-like configuration.

16. The funneling apparatus of claim 15, wherein the funneling apparatus includes spike attachment locations along at least one of the major and minor axes.

17. The funneling apparatus of any one of the preceding claims, further comprising at least one or more of at least one grommet and/or at least one edge device configured to accept at least one spike for securing at least a portion of the sheet to the ground.

18. The funneling apparatus of any one of the preceding claims, further comprising at least one bag stay extending at least partially across a portion of the sheet that will be adjacent the mouth of the bag when the funneling apparatus is inserted into the bag, whereby the at least one bag stay is operable for applying outward pressure against a portion of the bag for helping keep the bag open.

19. The funneling apparatus of any of the preceding claims, wherein a gap is defined along the length of the side defined by the generally opposing edges when the sheet is rolled into the funnel-like configuration, whereby the gap facilitates a user compressing debris by reaching into the gap to push debris down into or out of the funneling apparatus.

20. An apparatus attachable along an edge portion of a sheet of material for adding rigidity to the edge portion and/or for securing the edge portion to the ground, the apparatus comprising an edge device including resilient upper and lower portions configured for receiving and compressively clamping onto the edge portion of the sheet of material to releasably attach the edge device to the sheet of material.

21. The apparatus of claim 20, wherein the upper and lower portions cooperatively define a generally V shaped portion of the edge device.

22. The apparatus of claim 20 or 21, wherein the upper and lower portions define aligned openings for receiving one or more devices therethrough.

23. The apparatus of claim 22, further comprising one or more devices within the aligned openings, and configured for driving into the ground for securing the edge portion of the sheet of material to the ground.

24. The apparatus of claim 23, wherein the one or more devices compress the upper and lower portions towards each other for compressively clamping onto the edge portion of the sheet of material.

25. The apparatus of claim 23 or 24, wherein the one or more devices comprise one or more spikes, stakes, or anchors.

26. The apparatus of any one of claims 23-25, wherein the one or more devices comprises at least one spike including a head having an opening for receiving a rope therethrough and a shaft configured for being driven into the ground for securing the edge portion of the sheet of material to the ground.

27. The apparatus of any one of claims 23-26, wherein the one or more devices comprises at least one spike including a head and a shaft configured for being driven into the ground for securing the edge portion of the sheet of material to the ground, the shaft including one or more notches and/or one or more resilient fins for engaging the edge device after passing through the aligned openings.

28. The apparatus of any one of claims 23-27, wherein the one or more devices comprises at least one spike including upper and lower pieces removably attachable to each other along opposite upper and lower sides of the edge device, and wherein the lower piece is configured for being driven into the ground for securing the edge portion of the sheet of material to the ground.

29. The apparatus of any one of claims 23-28, wherein the one or more devices comprises at least one threaded bolt and at least one spike including a neck with an opening for receiving a threaded nut such that the at least one threaded bolt and at least one spike are attachable to each other along opposite upper and lower sides of the edge device.

30. The apparatus of any one of claims 23-29, wherein the one or more devices comprises at least one spike including a head having one of an internally or externally threaded portion, and a shaft having the other one of an internally or

externally threaded portion, such that the head and shaft are threadedly attachable to each other along opposite upper and lower sides of the edge device.

31. The apparatus of any one of claims 23-30, wherein the one or more devices comprises at least one spike having a shaft configured for being driven into the ground for securing the edge portion of the sheet of material to the ground, the shaft also configured so as to have a shape corresponding to the shape of the one or more aligned openings.

32. The apparatus of any one of claims 20-31, wherein the apparatus is attached along an edge portion of a tarp.

33. The apparatus of any one of claims 20-32, wherein:

the edge device comprises rubber; and/or

the upper and lower portions are hingedly connected by a living hinge.

34. The apparatus of any one of claims 20-33, wherein the upper and lower portions are resiliently biased towards one another and openable for receiving the edge portion therein, the resilient biasing of the upper and lower portions operable for causing the upper and lower portions to compressively clamp onto the edge portion of the sheet of material.

35. The apparatus of any one of claims 20-34, wherein the edge device includes a curved leading edge portion having convexly curving from the upper portion towards the ground.

36. The apparatus of any one of claims 20-35, wherein the apparatus is attached along an edge portion of a sheet of material that is rollable from a flat configuration into a funnel-like configuration.

37. The apparatus of any one of claims 20-36, wherein the upper portion of the edge device is longer than the lower portion of the edge device.

38. The apparatus of any one of claims 20-37, further comprising a collar device attached to the edge device through which may be received at least one rope.

39. The apparatus of any one of claims 20-38 in combination with the funneling apparatus of any one of claims 1-19.

40. A funneling apparatus comprising a sheet of material having a first edge portion and a second edge portion, and at least one attachment device for removably attaching the first edge portion to the second edge portion, wherein the funneling apparatus is configurable between at least a first configuration in which the sheet is rolled into a funnel-like configuration with the attachment device attaching

the first edge portion to the second edge portion, and a second configuration in which the sheet is substantially flat with the first and second edge portion detached from one another.

41. The funneling apparatus of claim 40, wherein the funneling apparatus is configured to allow selective adjustment to the funnel size.

42. The funneling apparatus of claim 40 or 41, wherein the at least one attachment device allows the first edge portion to be attached to the second edge portion such that the first and second edge portions are separated by a gap or overlapped by a selectively variable amount.

43. The funneling apparatus of any one of claims 40-42, wherein the at least one attachment device includes a looped rope or webbing knotted at intervals to provide for additional loops in the rope or webbing and a handle portion.

44. The funneling apparatus of any one of claims 40-43, wherein a gap is defined along the length of the side defined by the first and second edge portions when the sheet is rolled into the funnel-like configuration, whereby the gap facilitates a user compressing debris by reaching into the gap to push debris down into or out of the funneling apparatus.

45. The funneling apparatus of any one of claims 40-44, further comprising at least one or more of a grommet and/or an edge device configured to accept at least one spike for securing at least a portion of the sheet to the ground when the funneling apparatus is in the first configuration in which the sheet is substantially flat.

46. The funneling apparatus of any one of claims 40-45, wherein the sheet of material comprises a tarp or canvas material stiffened with one or more battens or stays to enable the funneling apparatus to retain its shape when rolled and in use and remain open.

47. The funneling apparatus of any one of claims 40-46, further comprising a single stay that forms a continuous loop at or near a perimeter of the funneling apparatus.

48. The funneling apparatus of any one of claims 40-47, further comprising handle cutouts.

49. The funneling apparatus of any one of claims 40-48 in combination with the apparatus of any one of claims 20-38.

50. An apparatus attachable along an edge portion of a sheet of material for adding rigidity to the edge portion and/or for securing the edge portion to the ground, the apparatus comprising:

an edge device having at least one opening; and

at least one spike having upper and lower portions positionable on opposite sides of the edge device such that the at least one spike is engaged with the at least one opening of the edge device for attaching the edge device to the sheet of material, the at least one spike configured for driving into the ground.

51. The apparatus of claim 50, wherein the at least one opening of the edge device is alignable with a corresponding opening in the sheet of material to thereby allow at least a portion of the at least one spike to be inserted through the aligned openings.

52. The apparatus of claim 50 or 51, wherein the at least one spike includes one or more notches and/or one or more resilient fins for engaging the edge device.

53. The apparatus of any one of claims 50-52, wherein the upper and lower portions of the at least one spike are removably attachable to each other.

54. The apparatus of any one of claims 50-53, wherein the upper portion of the at least one spike includes an opening for receiving a rope therethrough.

55. The apparatus of any one of claims 50-54, wherein:

the upper portion of the at least one spike including an internally or externally threaded portion; and

the lower portion of the at least one spike includes the other one of an internally or externally threaded portion, such that the upper and lower portions of the at least one spike are removably attachable via their threaded portions on opposite sides of the edge device.

56. The apparatus of any one of claims 50-55, wherein:

the upper portion of the at least one spike includes a head of the at least one spike; and

the lower portion of the at least one spike includes a shaft of the at least one spike configured to be driven into the ground.

57. The apparatus of any one of claims 50-54, wherein:

the upper portion of the at least one spike includes a threaded bolt; and

the lower portion of the at least one spike includes a neck with an opening for receiving a threaded nut engagable with the threaded bolt.

58. The apparatus of any one of claims 50-57, wherein at least one of the upper and lower portions of the at least one spike is configured so as to have a shape corresponding to the shape of the at least one opening in the edge device.

59. The apparatus of any one of claims 50-58, wherein at least one of the upper and lower portions of the at least one spike is configured so as to frictionally engage the at least one opening in the edge device.

60. The apparatus of any one of claims 50-59, wherein the apparatus is attached along an edge portion of a tarp.

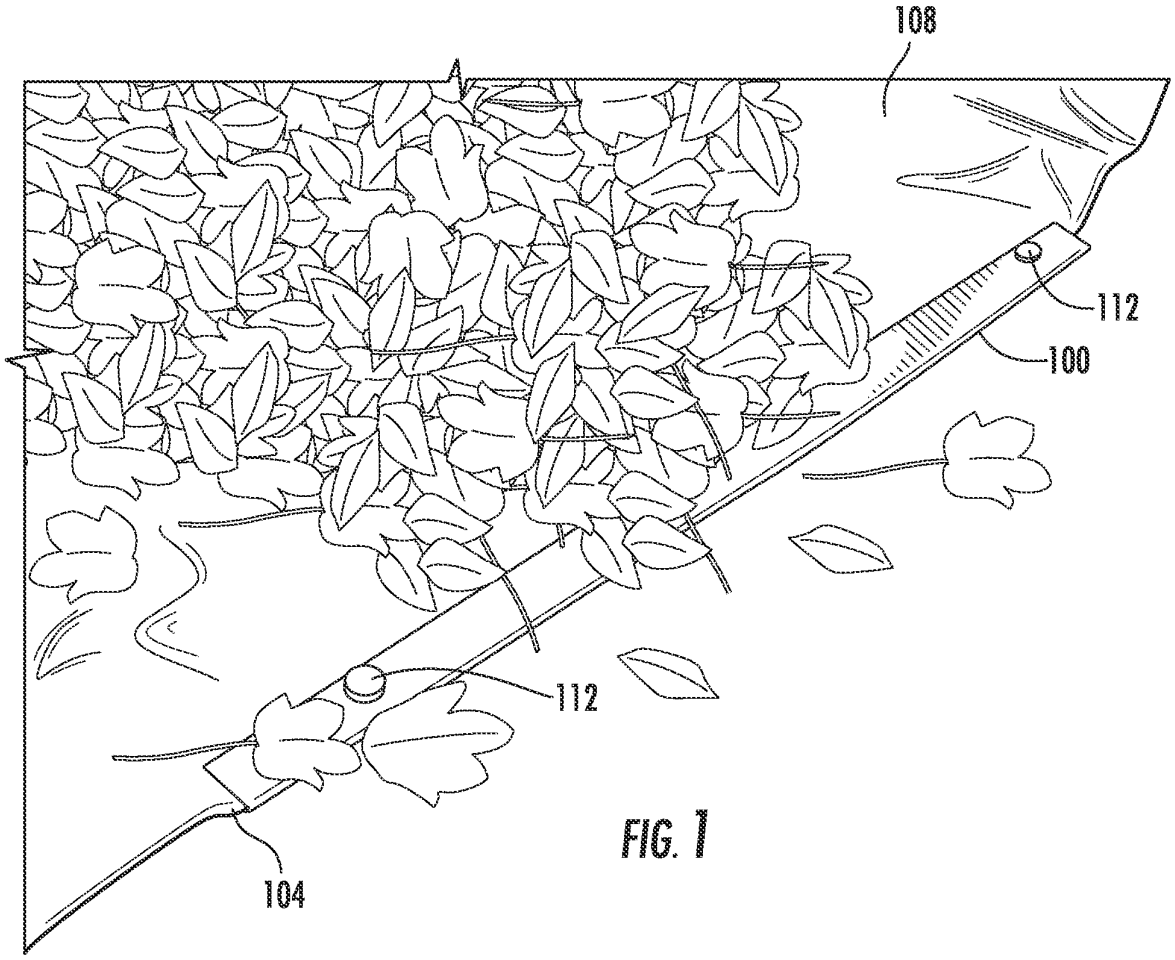

FIG. 1

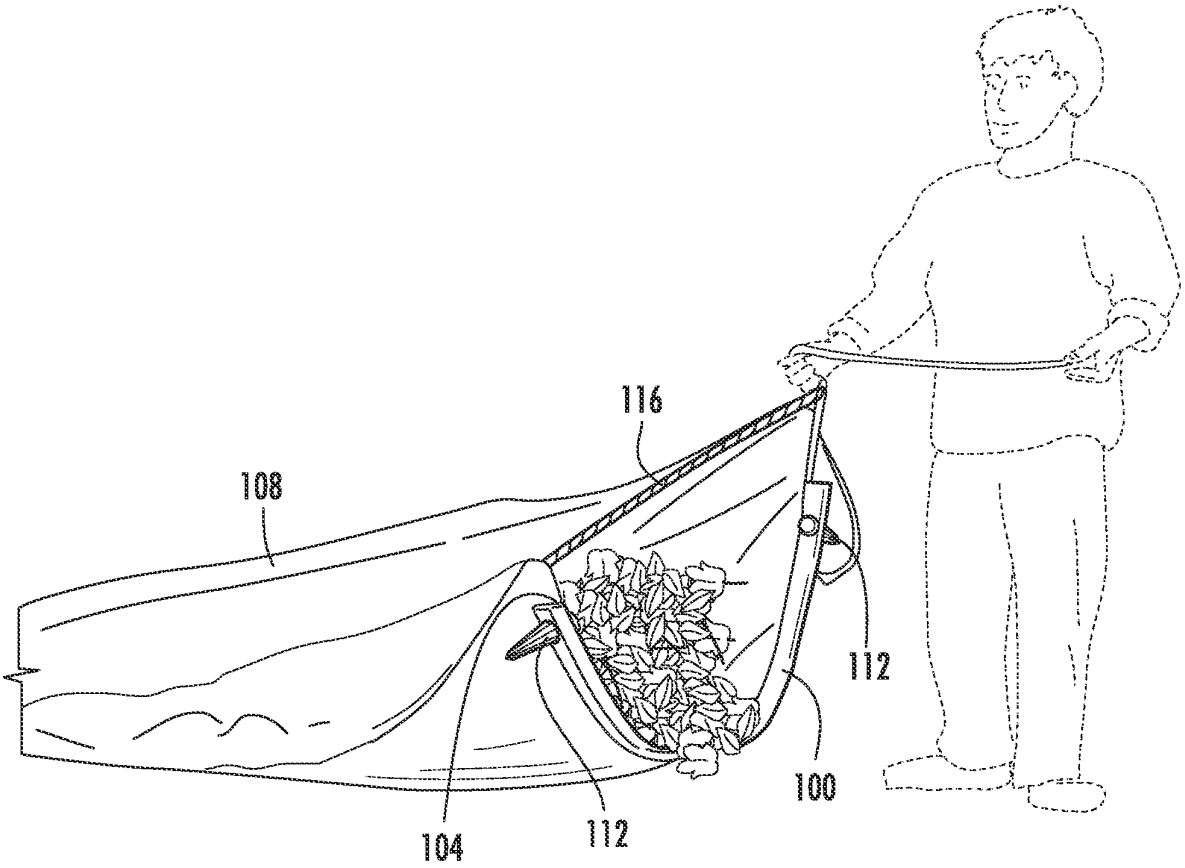

FIG. 2

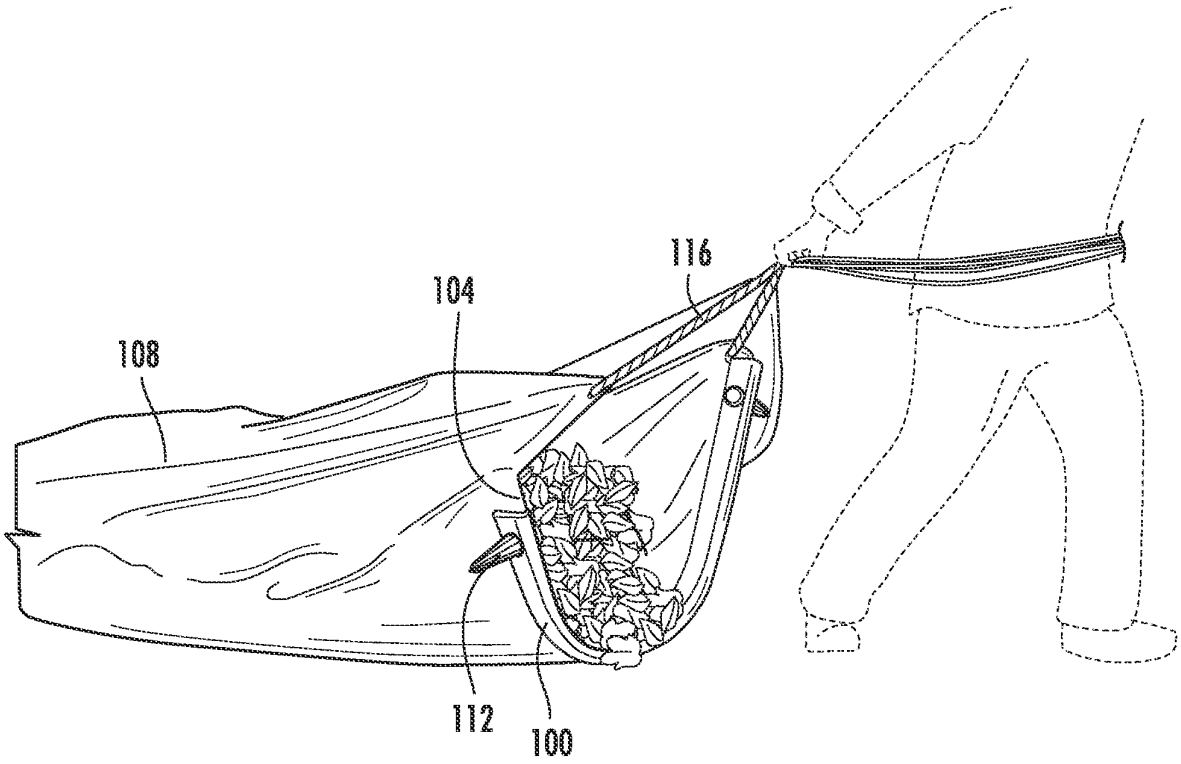

FIG. 3

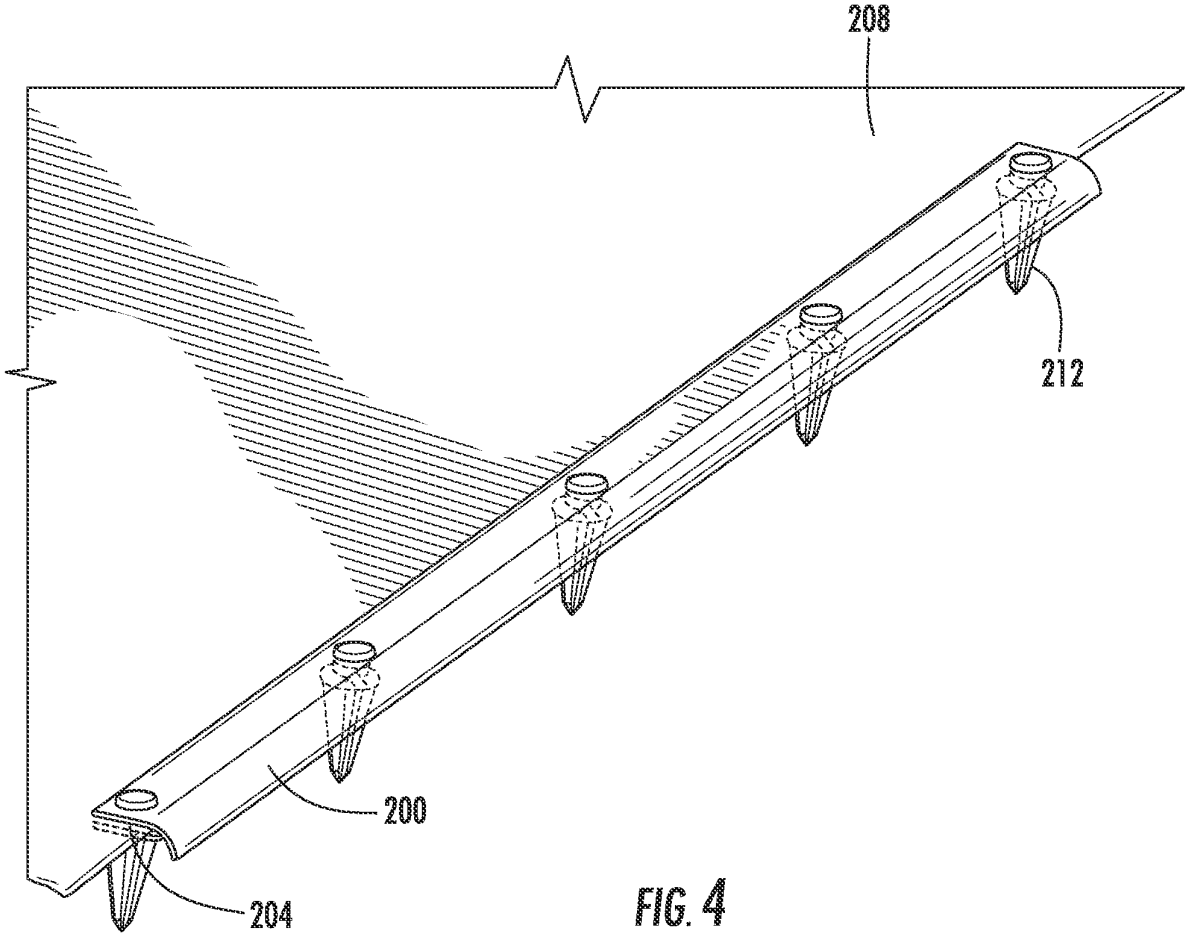

FIG. 4

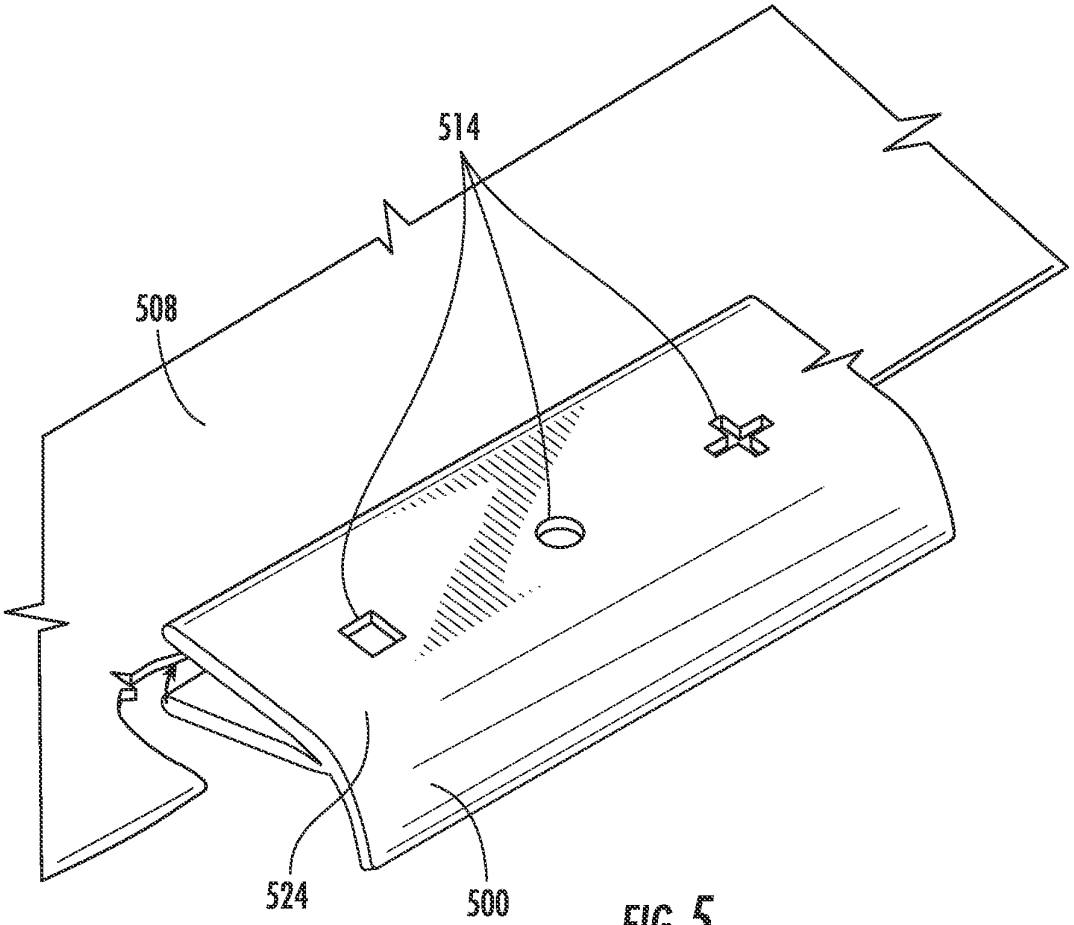

FIG. 5

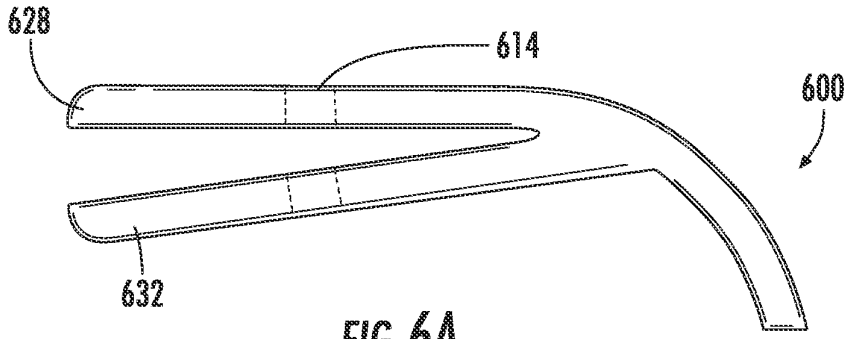

FIG. 6A

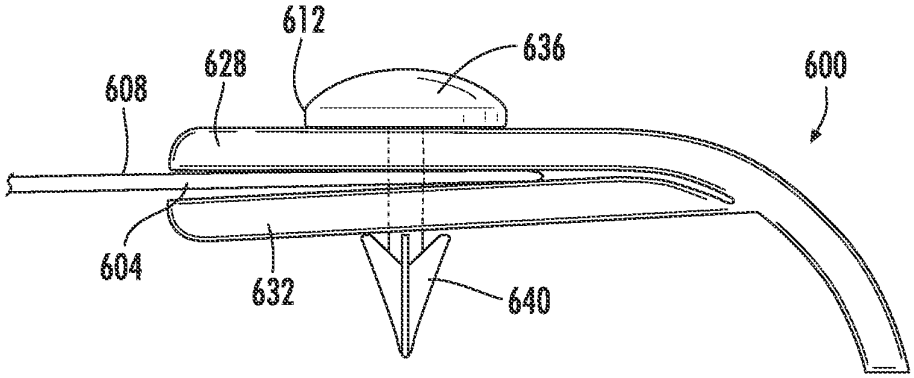

FIG. 6B

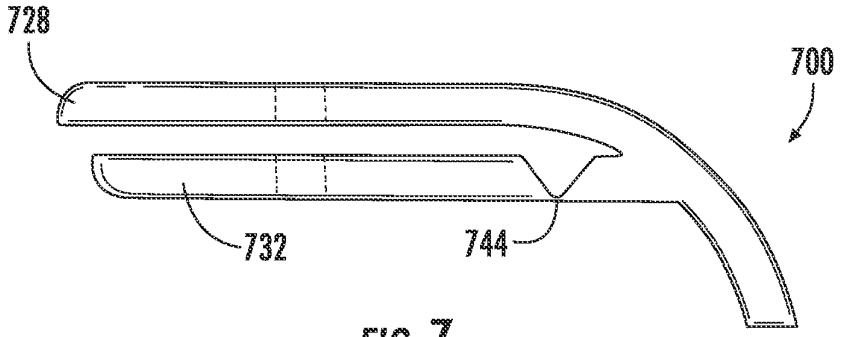

FIG. 7

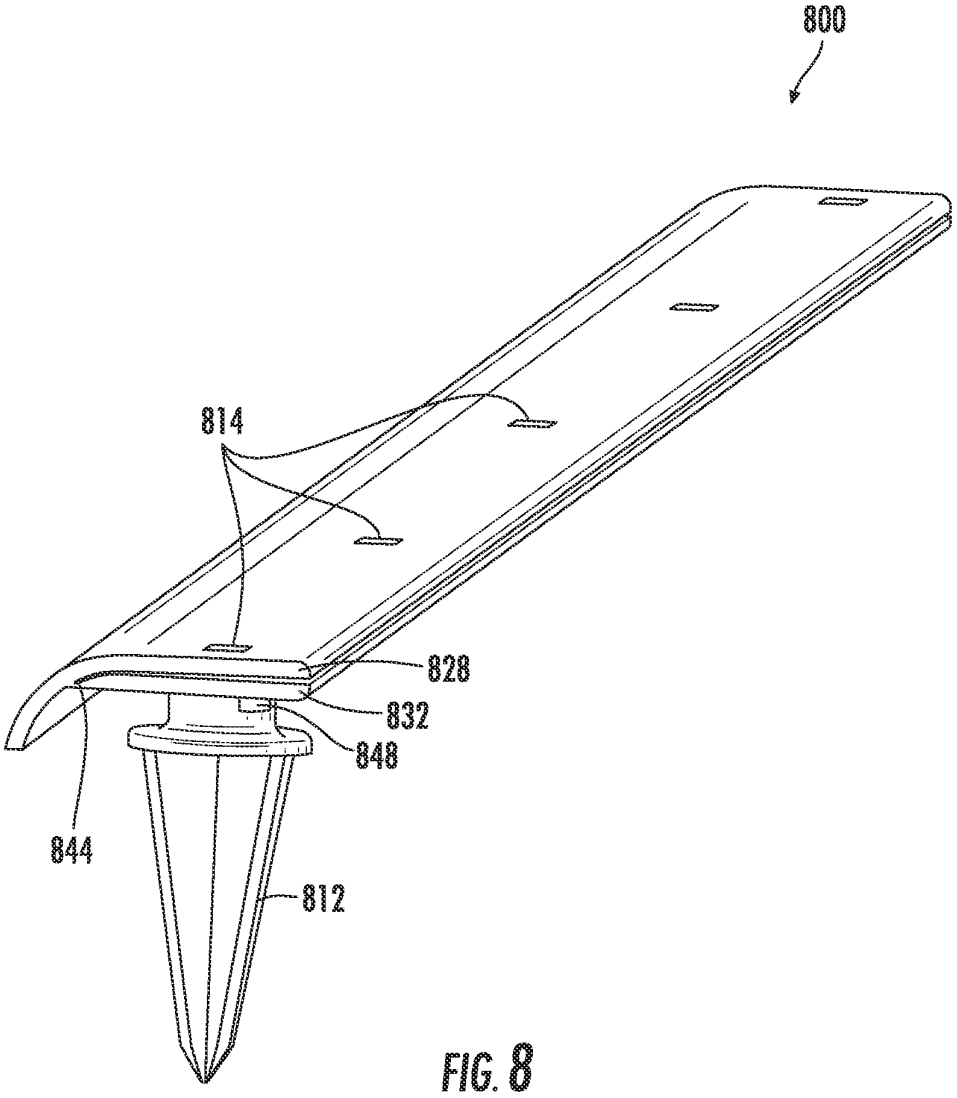

FIG. 8

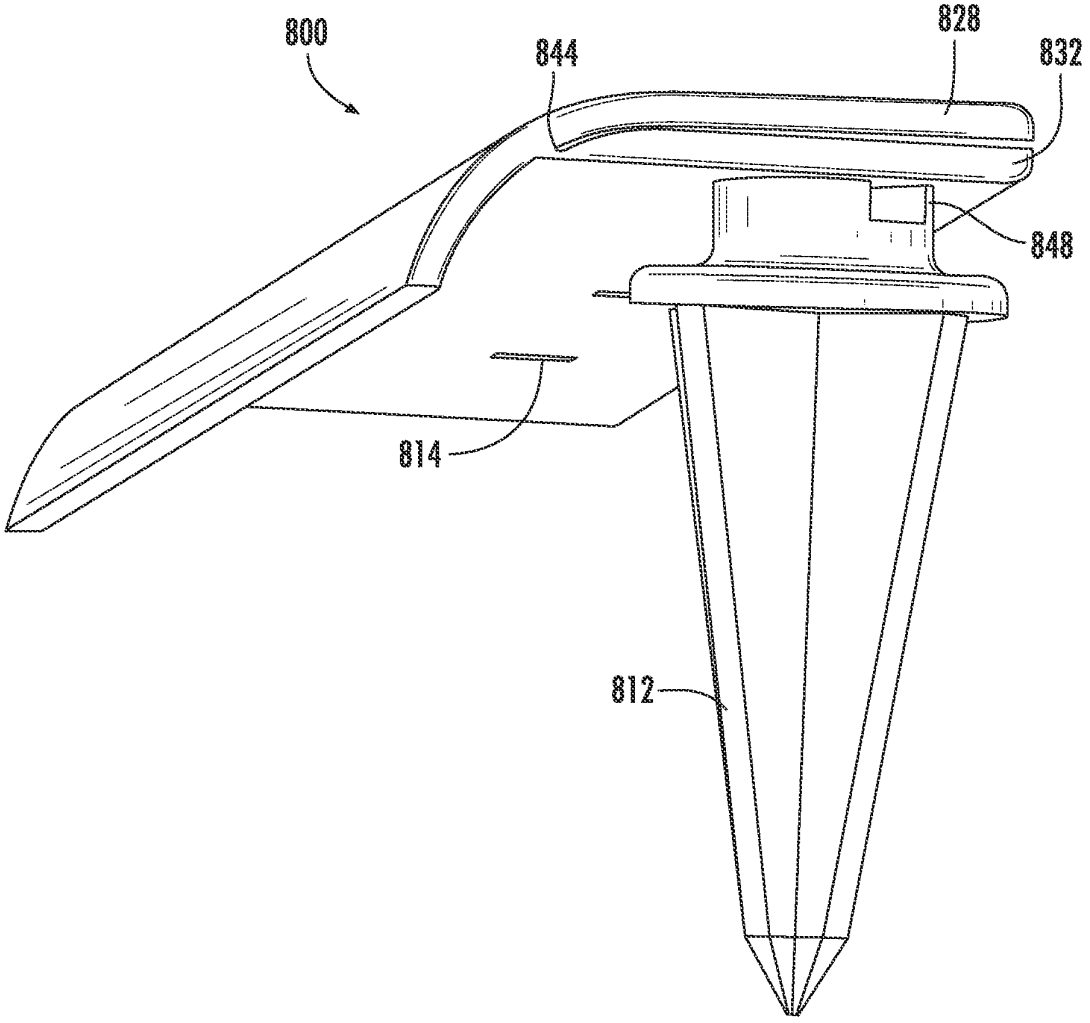

FIG. 9

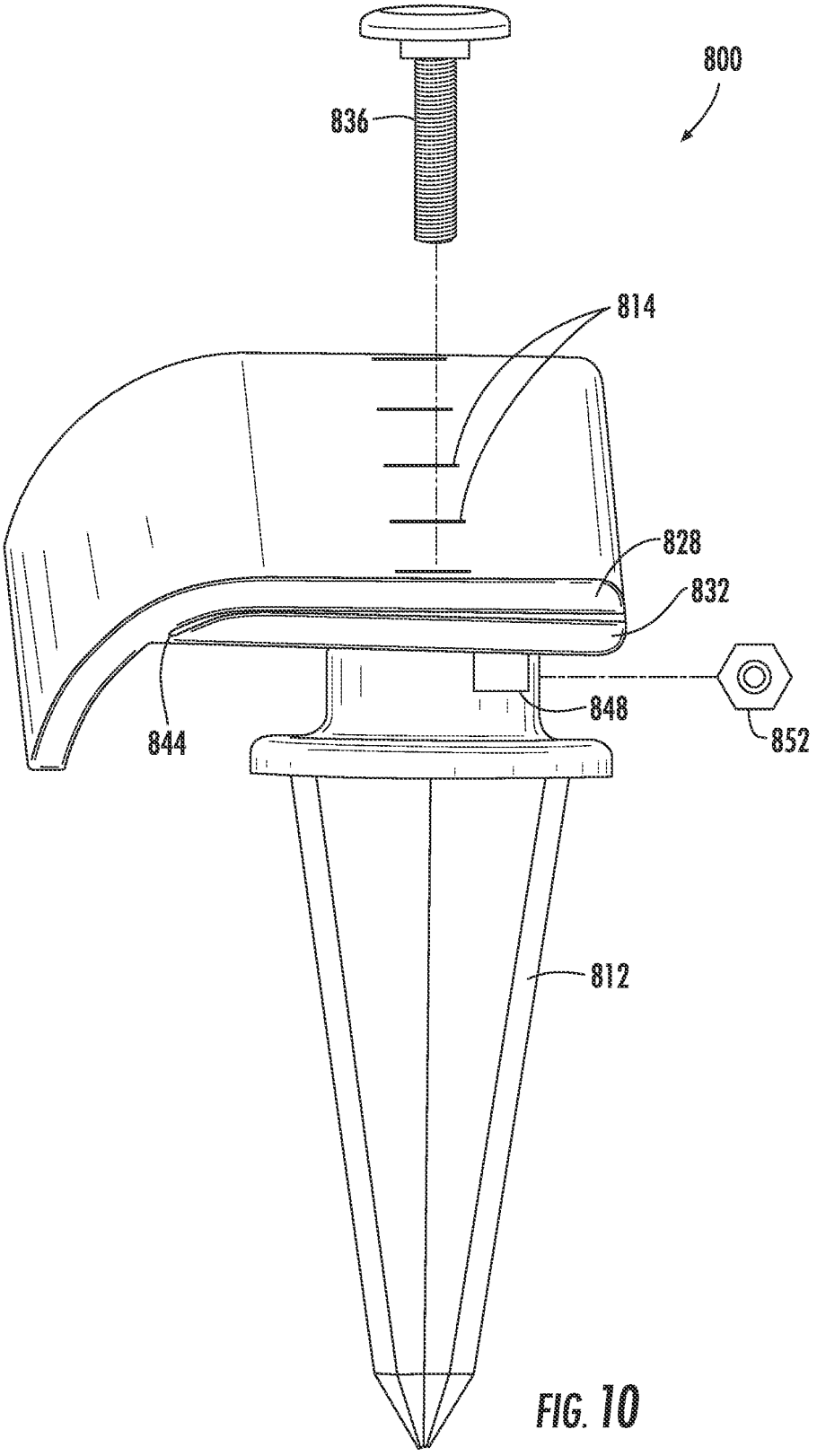

FIG. 10

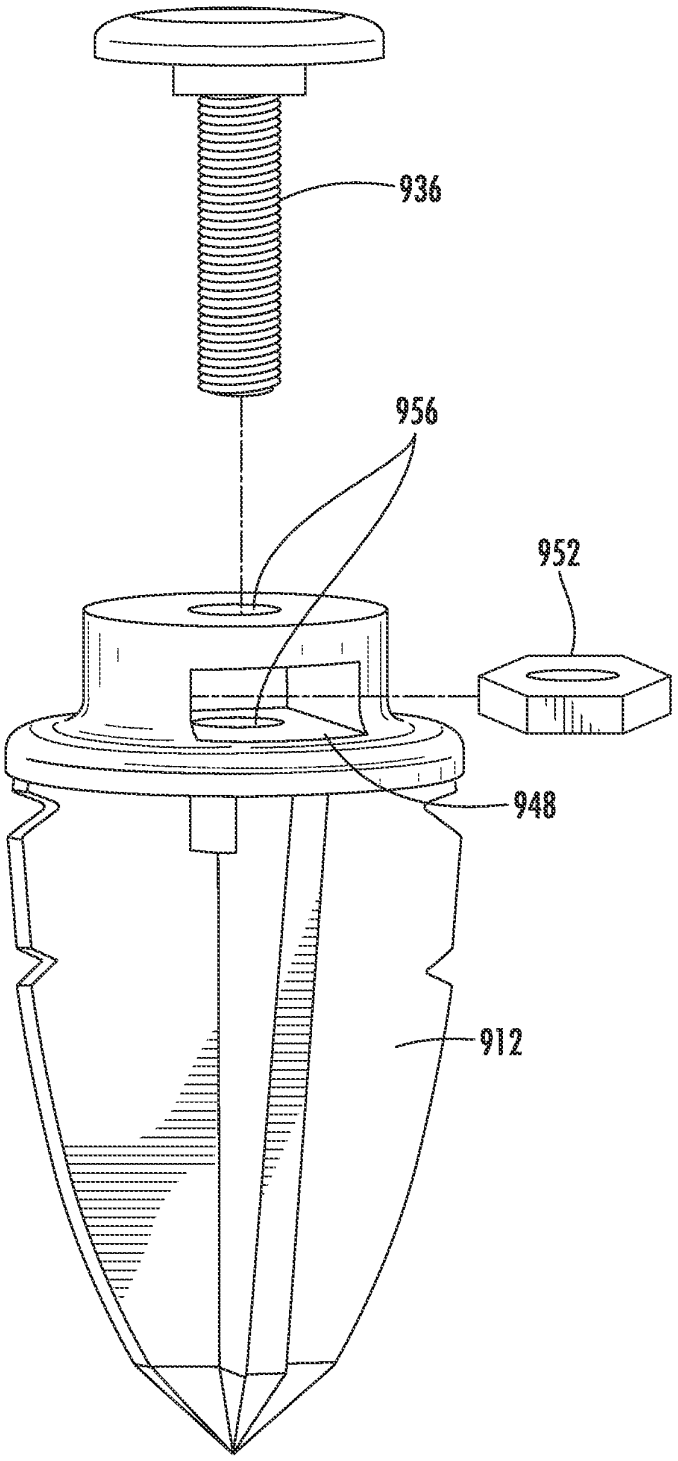

FIG. 11

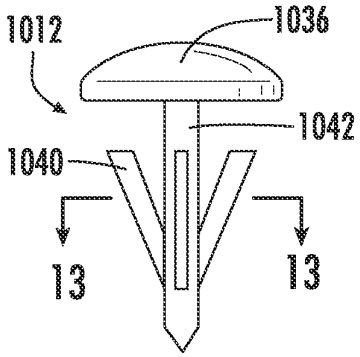

FIG. 12

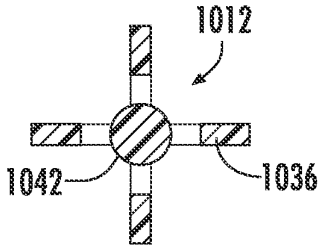

FIG. 13

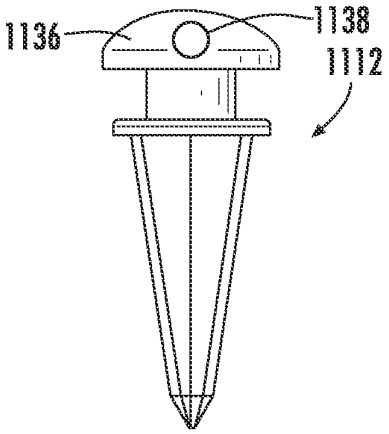

FIG. 14

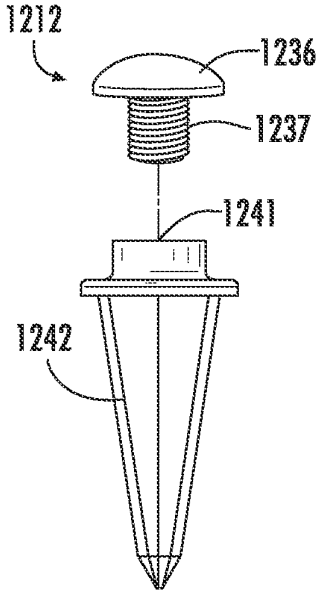

FIG. 15A

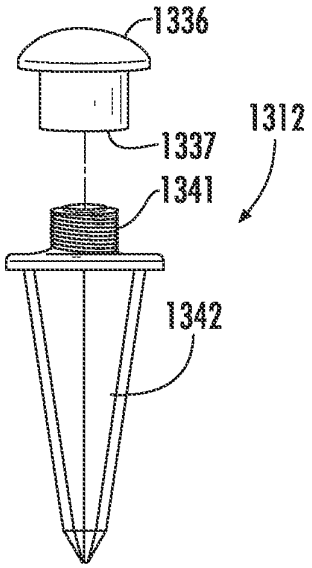

FIG. 15B

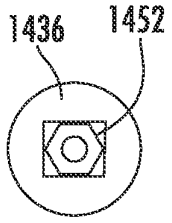

FIG. 15C

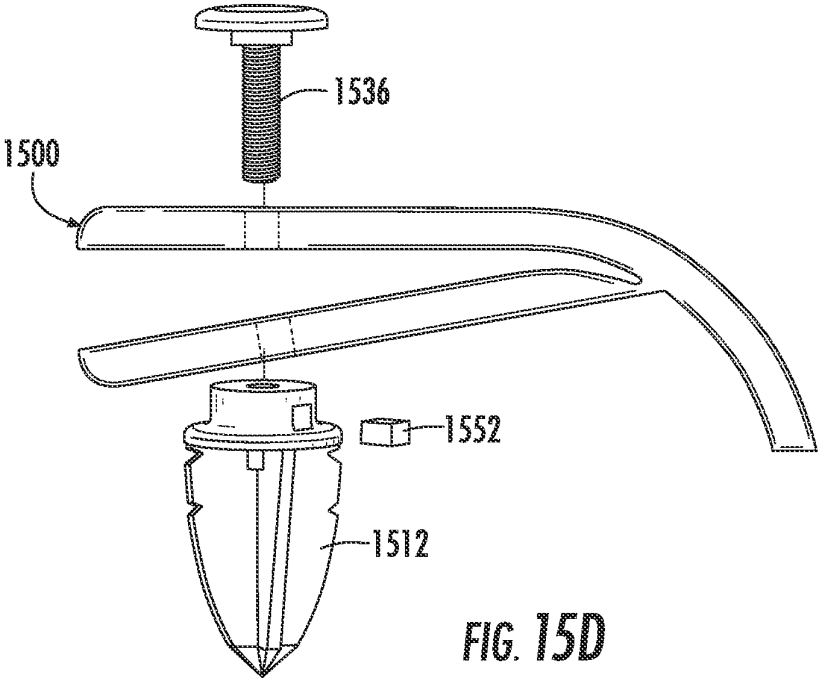

FIG. 15D

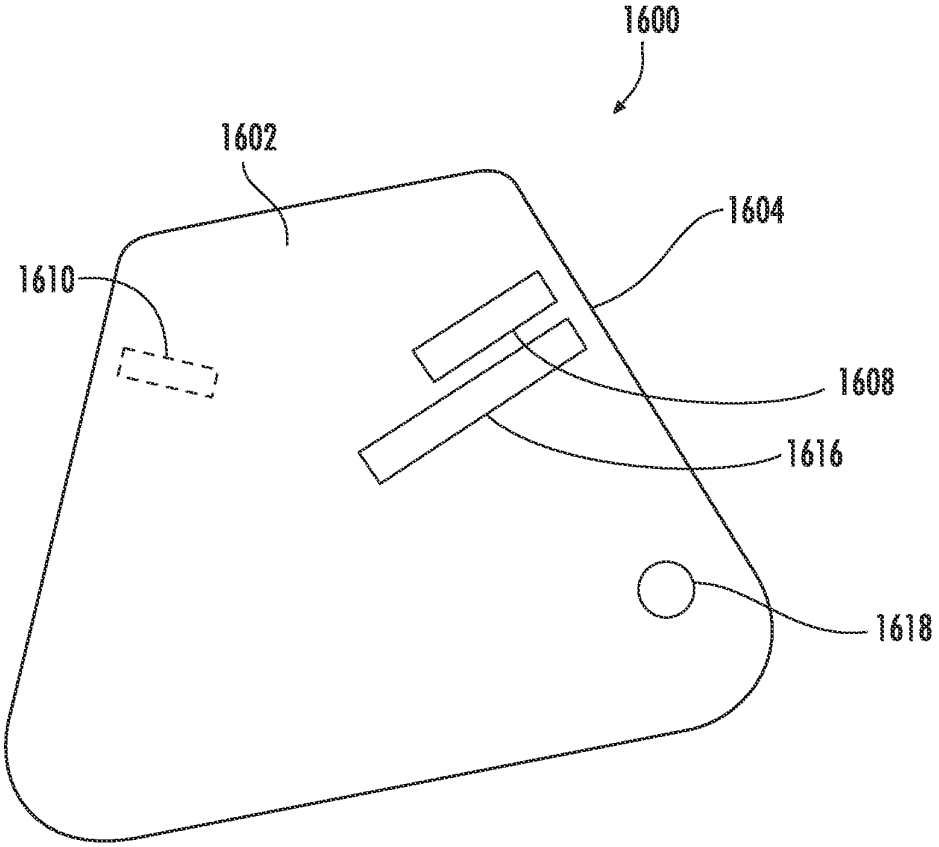

FIG. 16

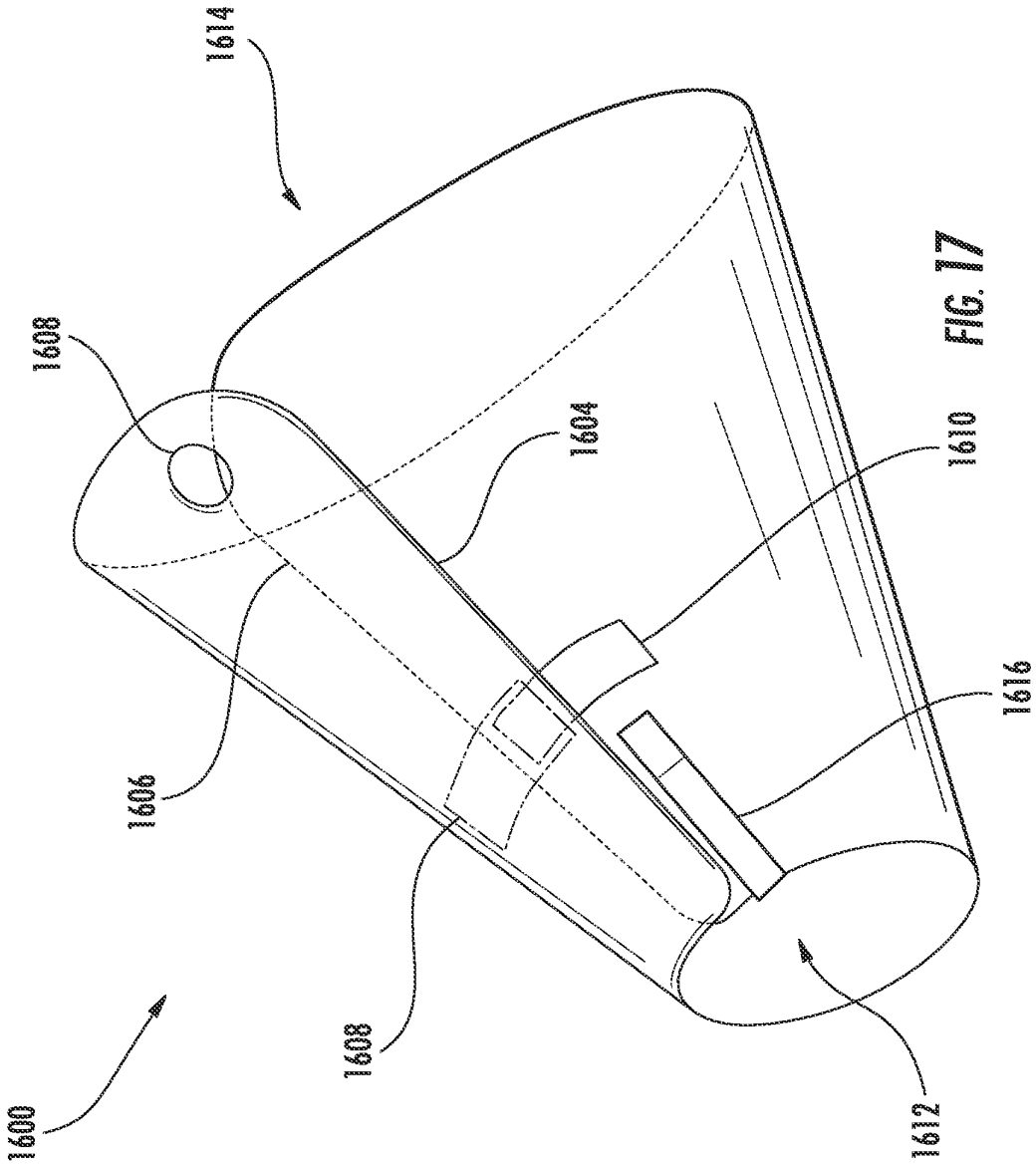

FIG. 17

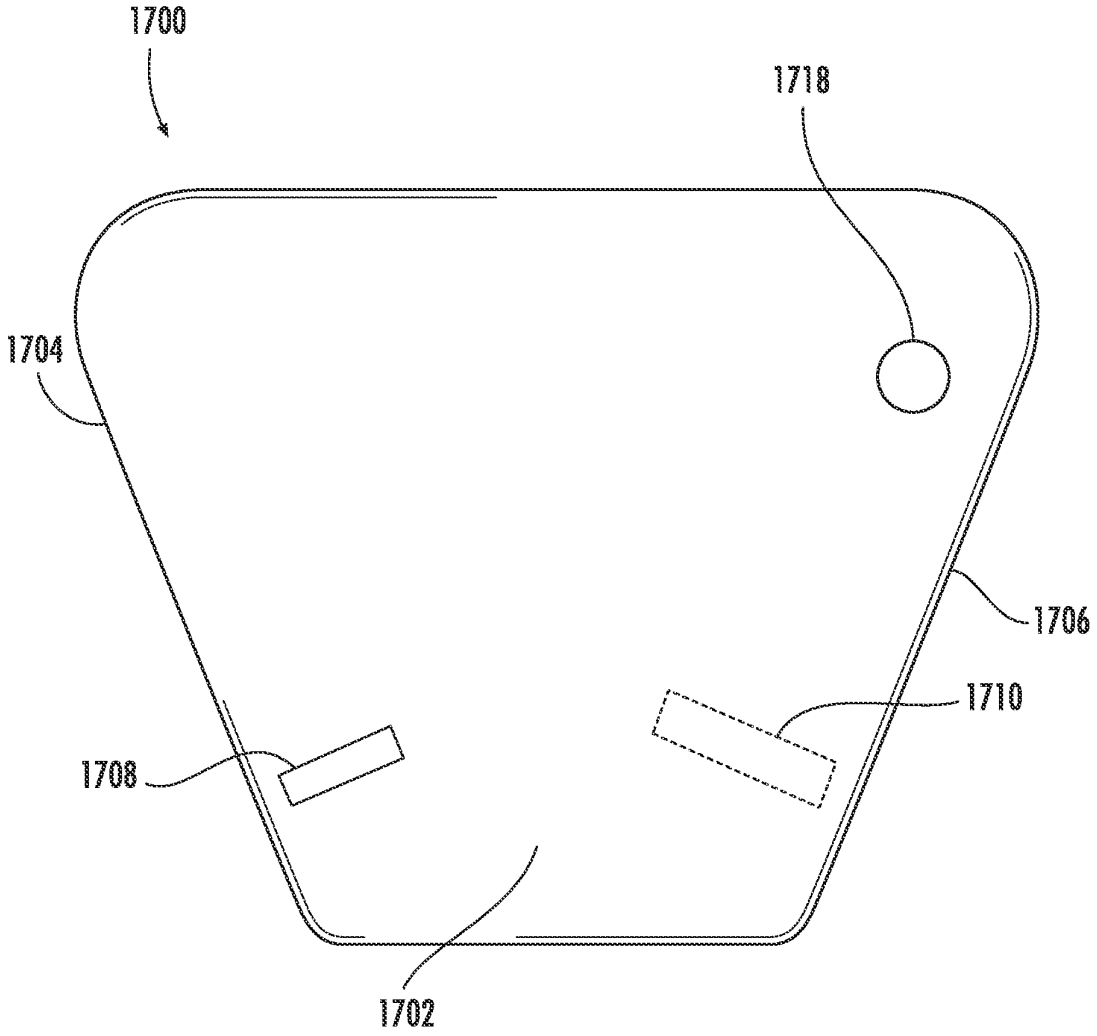

FIG. 18

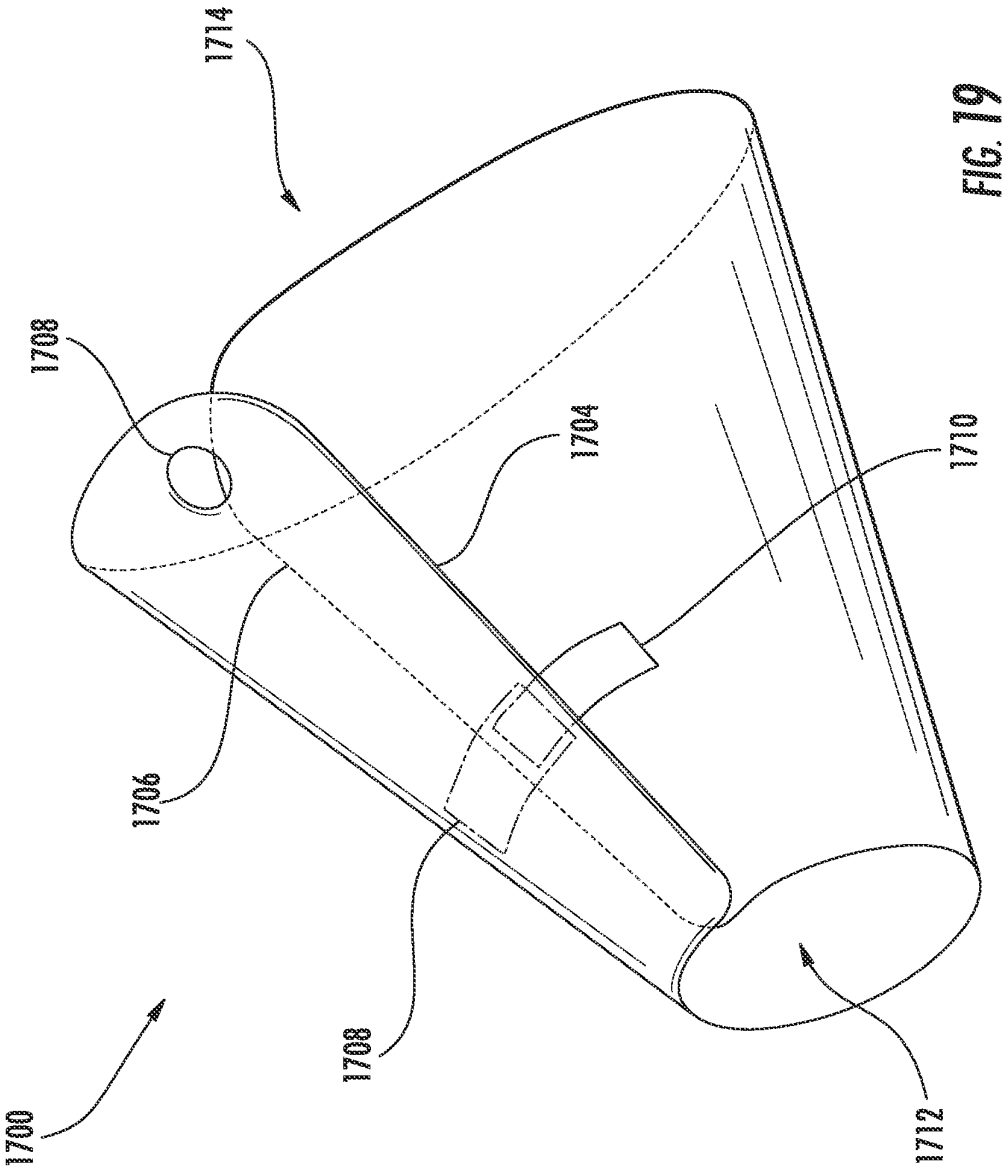

FIG. 19

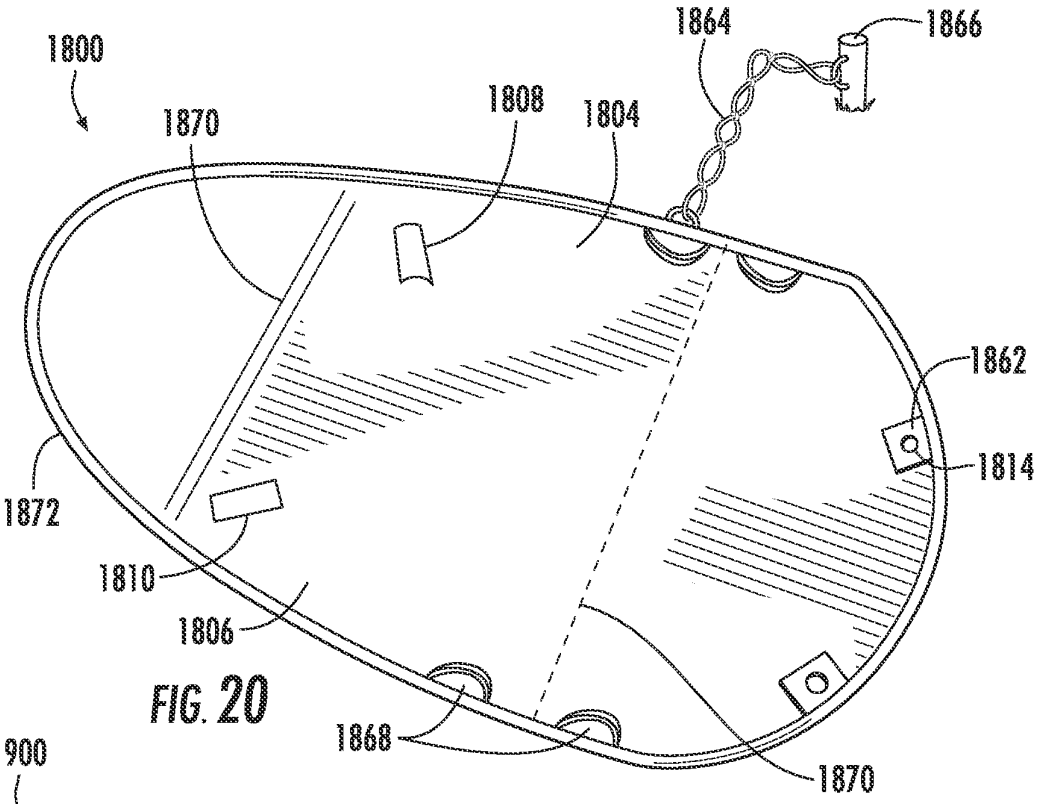

FIG. 20

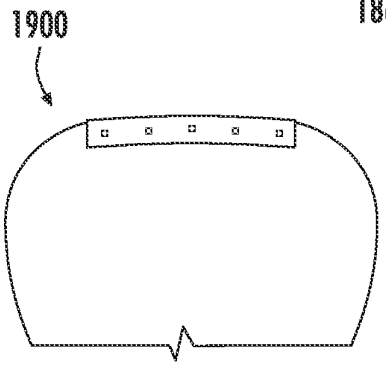

FIG. 21A

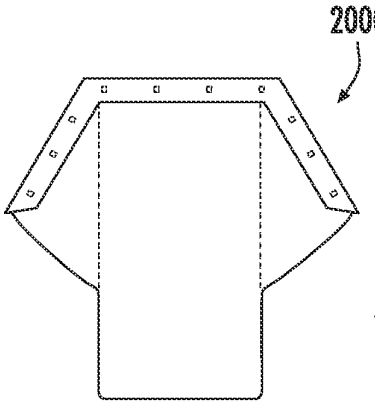

FIG. 21B

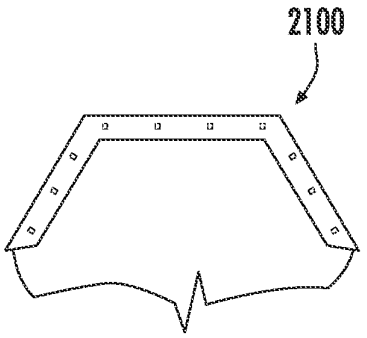

FIG. 21C

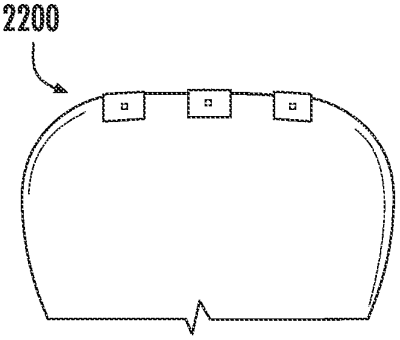

FIG. 21D

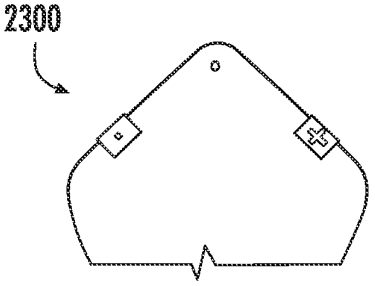

FIG. 21E

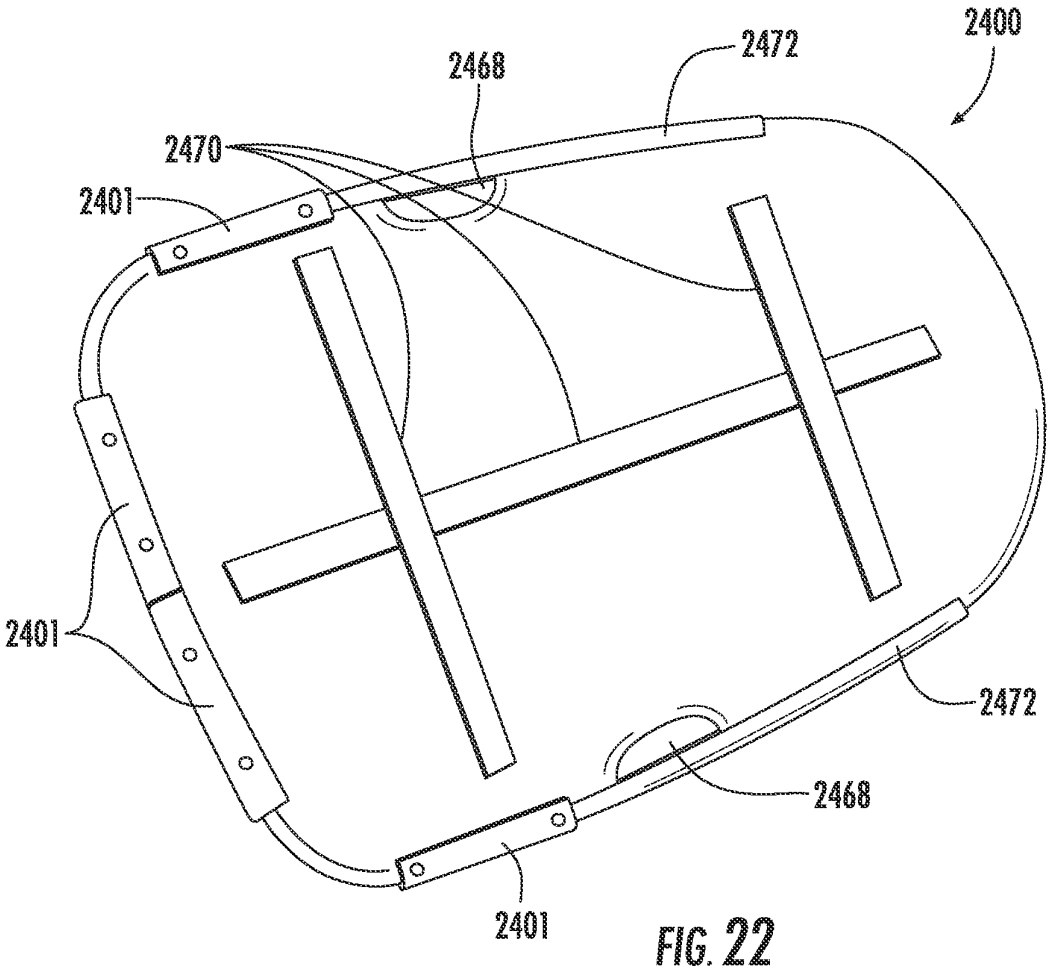

FIG. 22

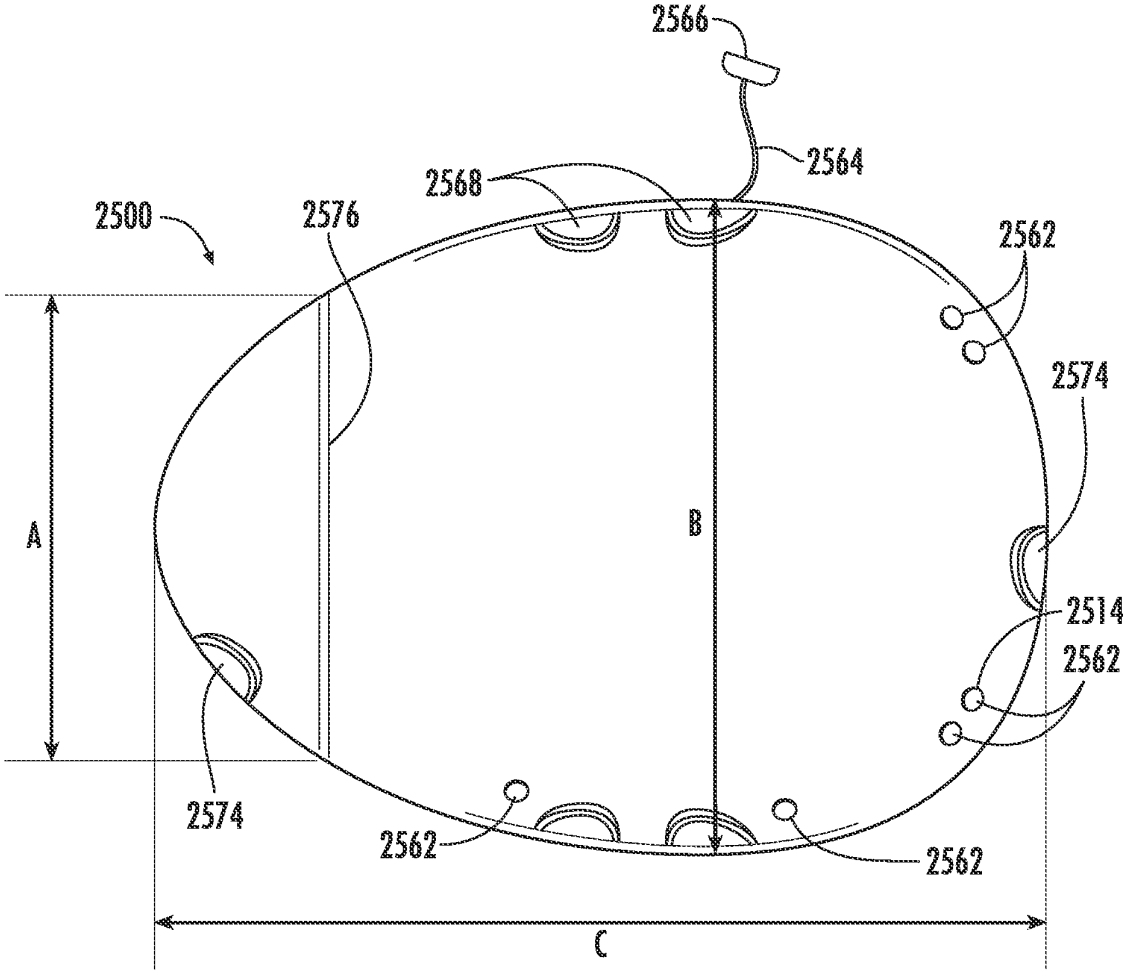
2566
2564
2568
2500
2576
2562
2574
A
B
2514
2562
2574
2562
2562
C

FIG. 23

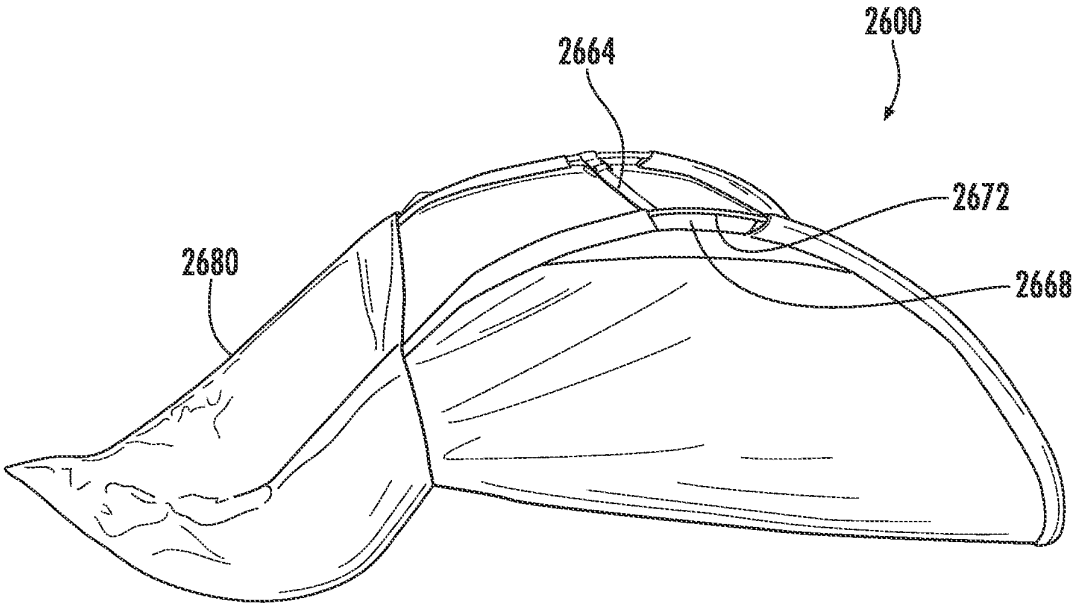

FIG. 24

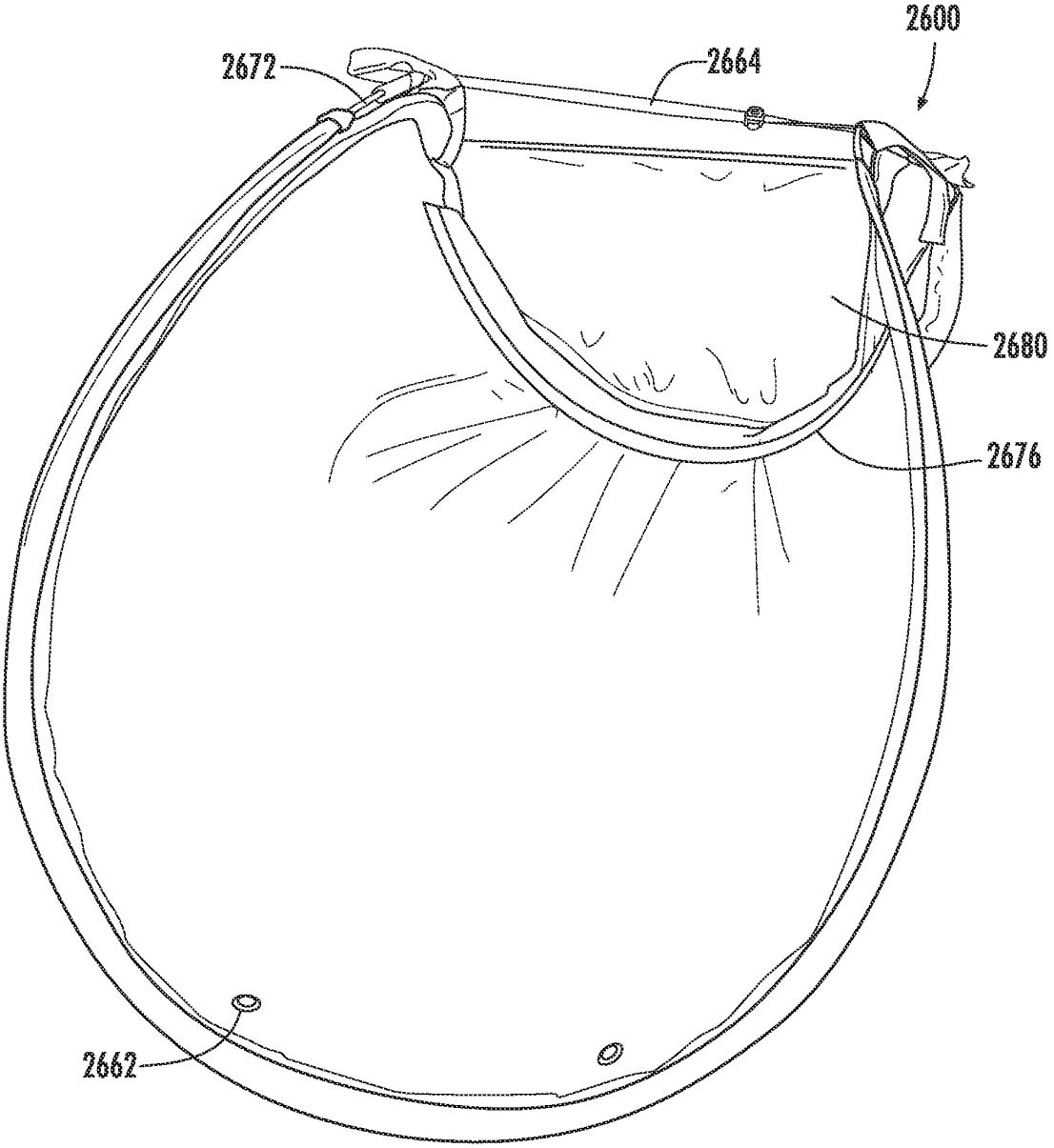

FIG. 25

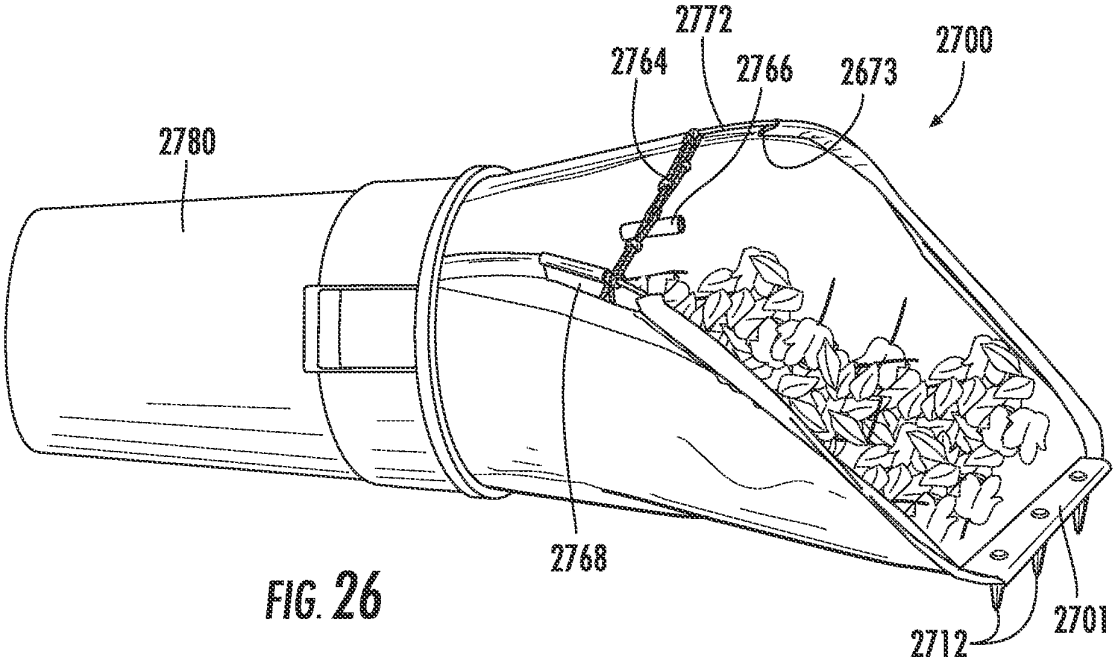
2772
2764
2766
2673
2700
2780
2768
2712
2701

FIG. 26

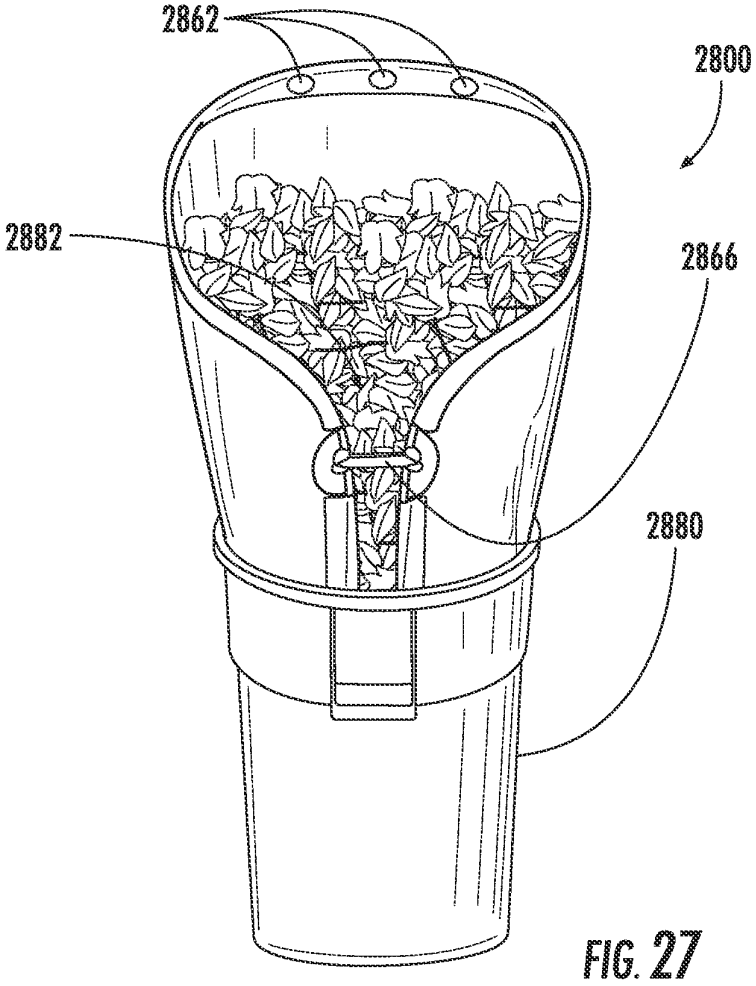
2862
2800
2882
2866
2880

FIG. 27

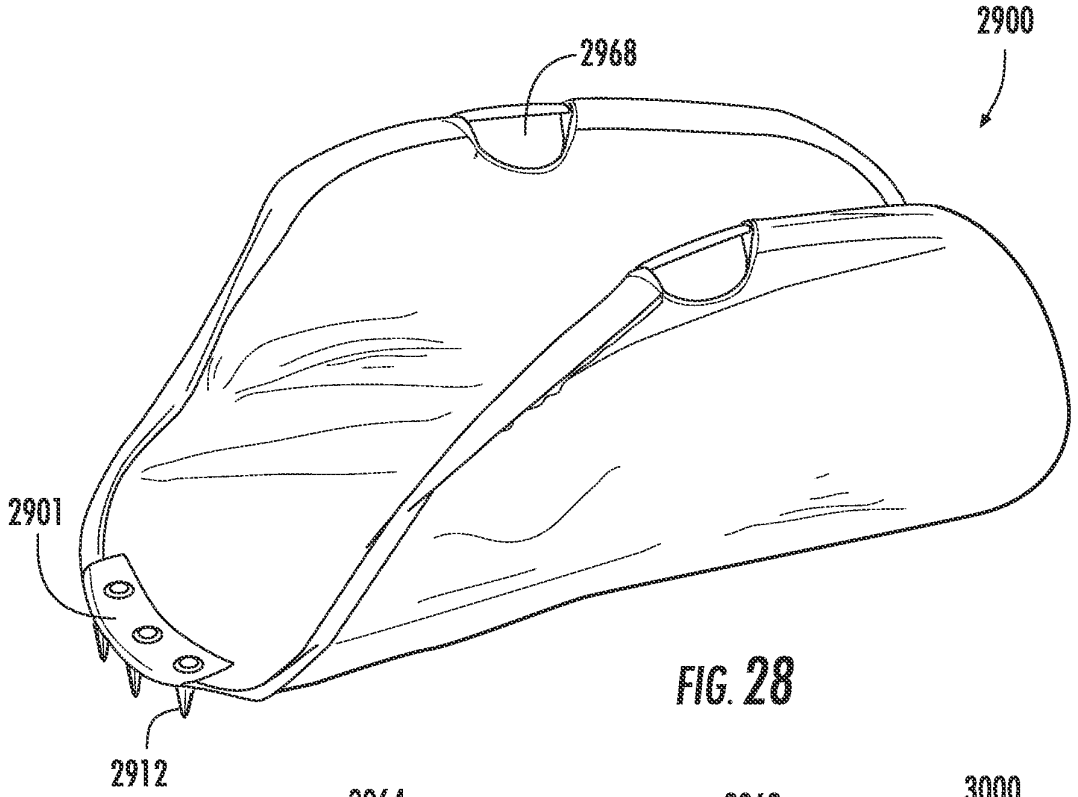

FIG. 28

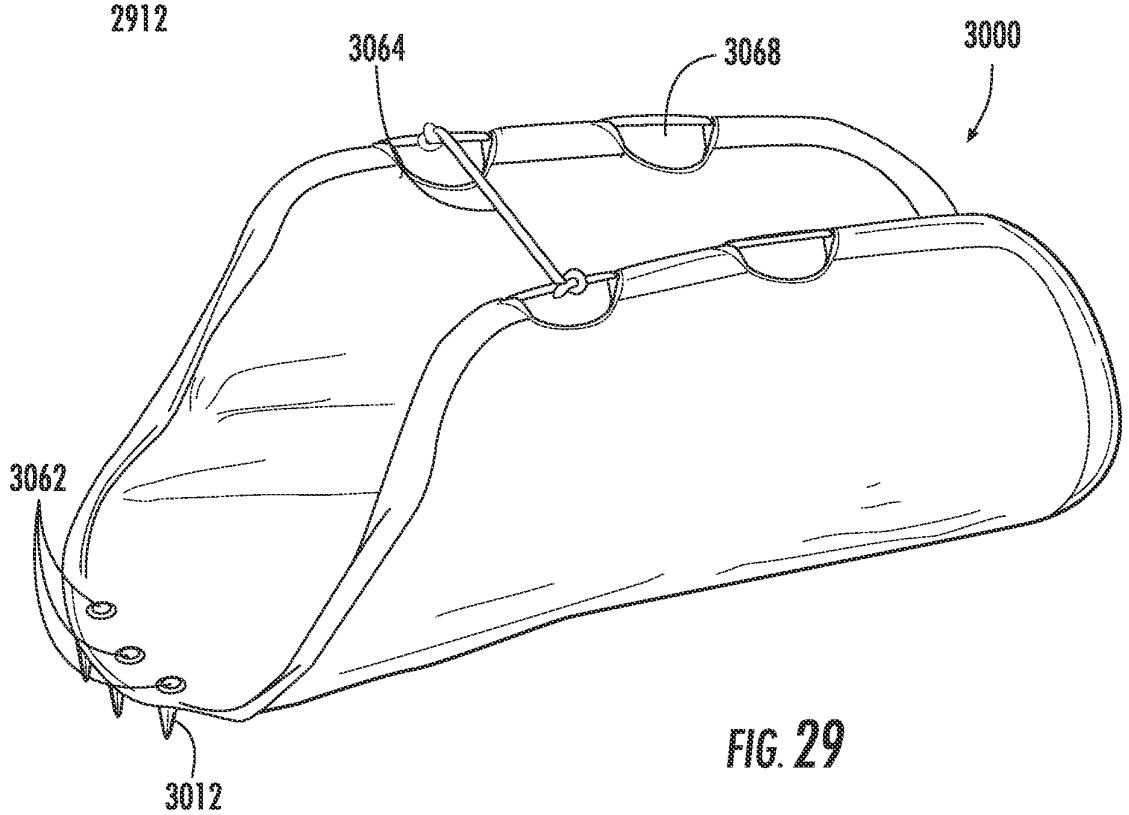

FIG. 29

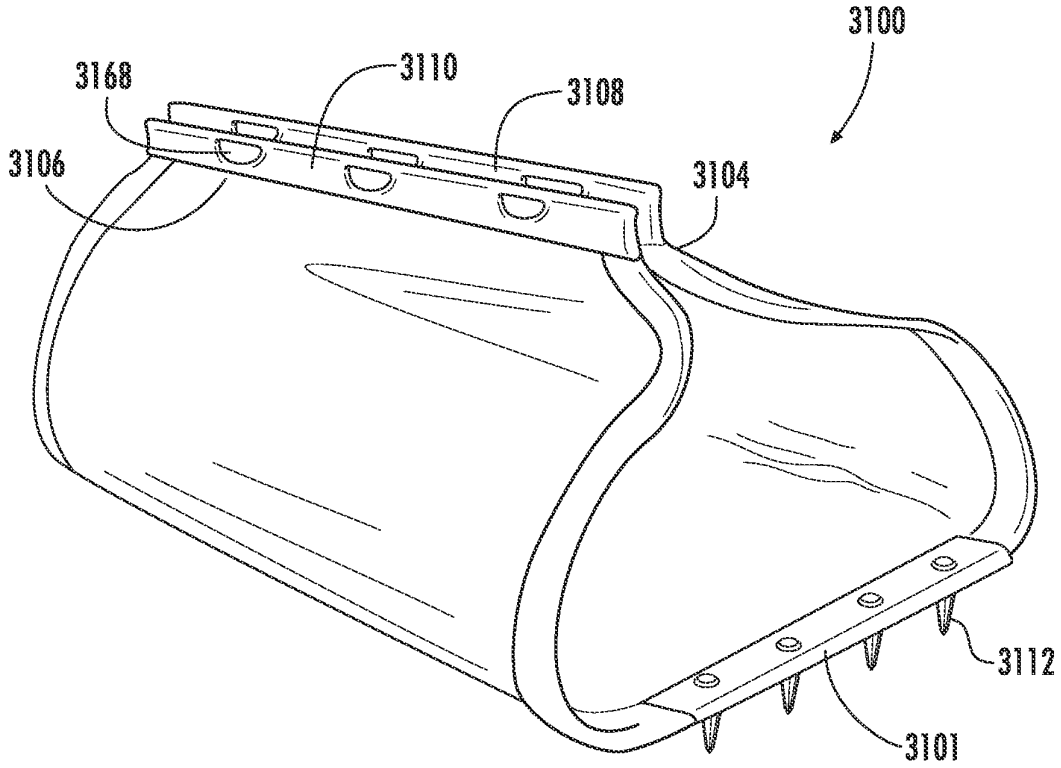

FIG. 30

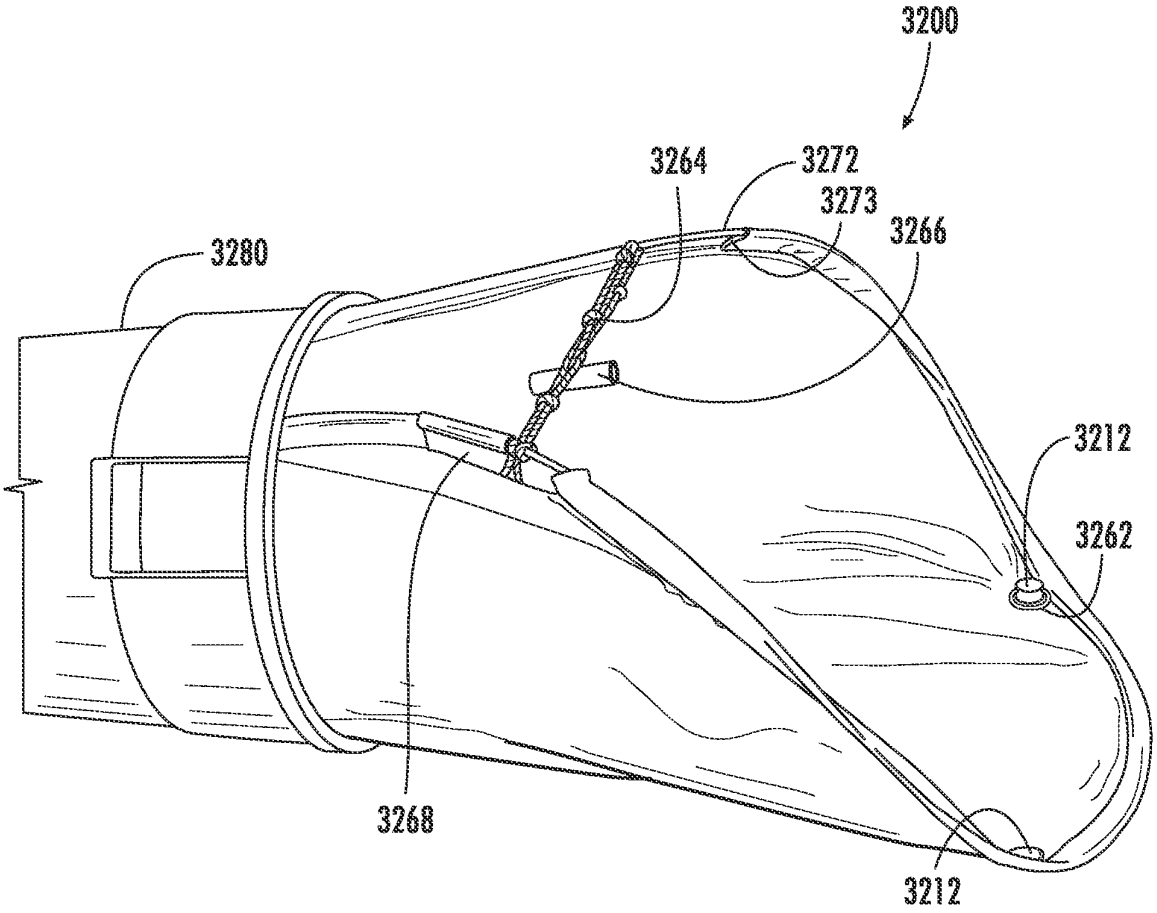

FIG. 31

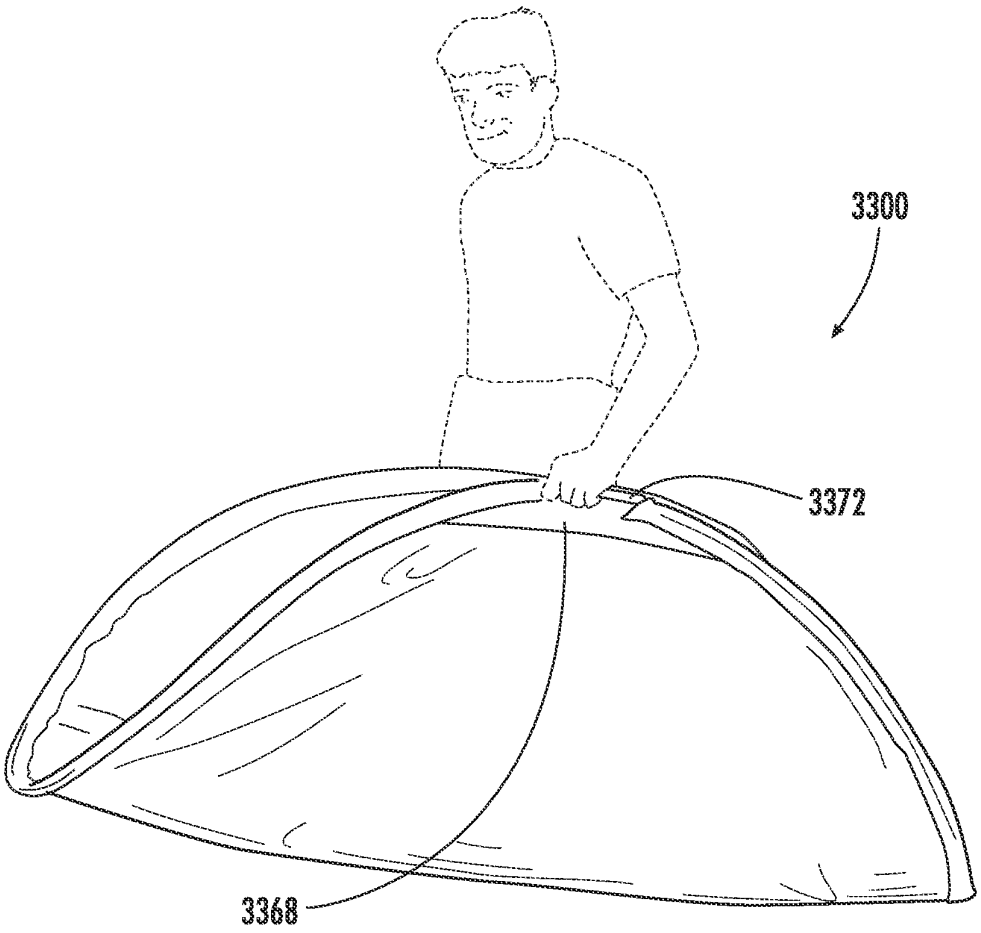

FIG. 32

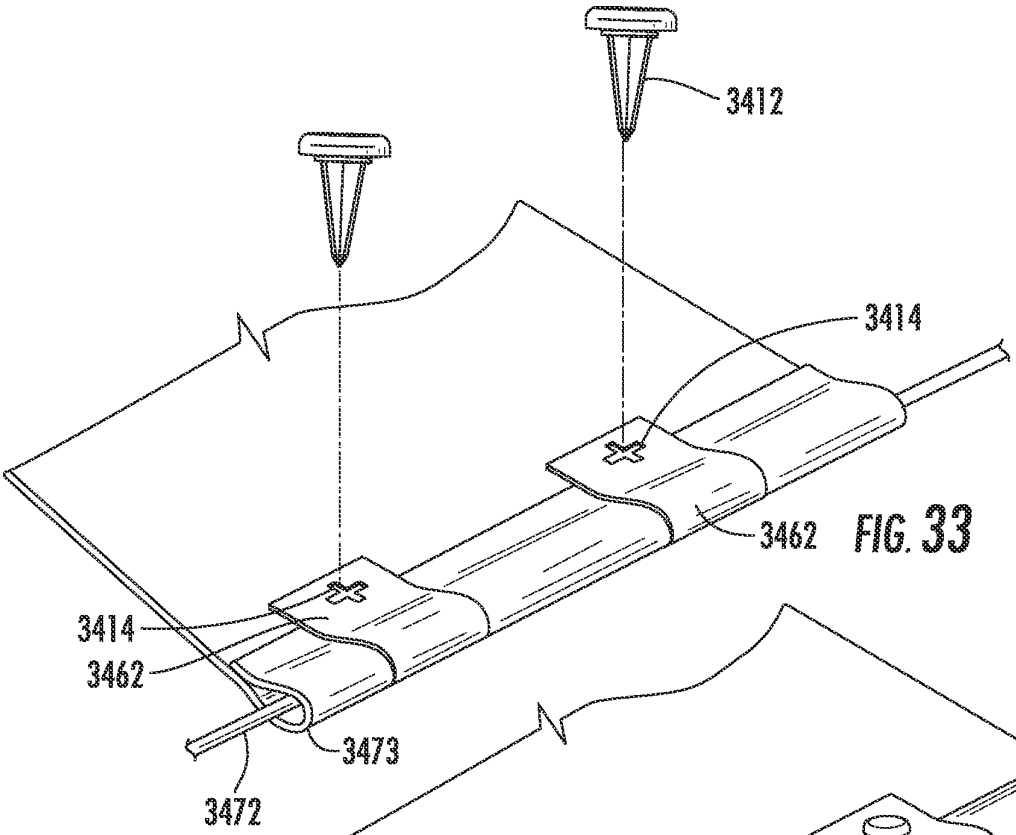

FIG. 33

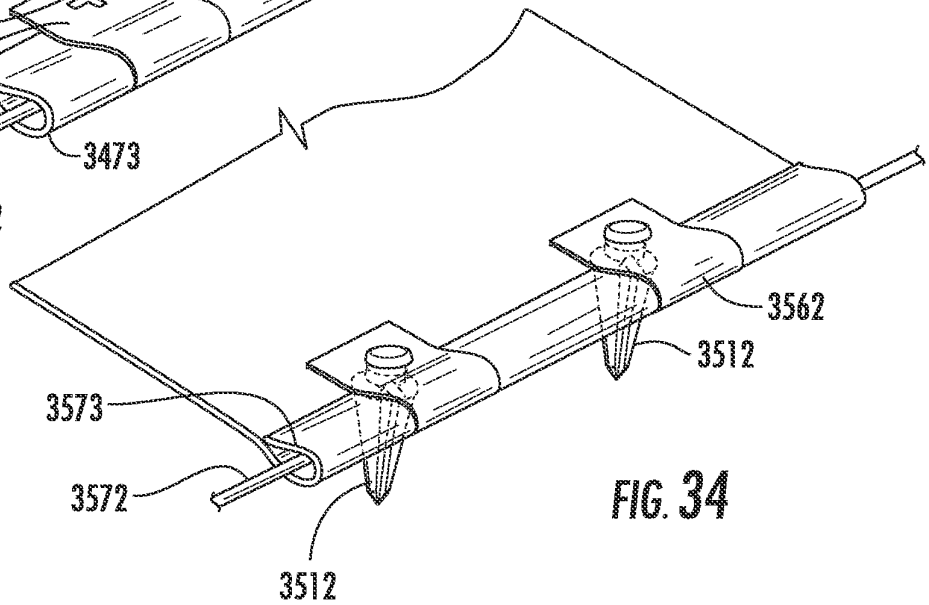

FIG. 34

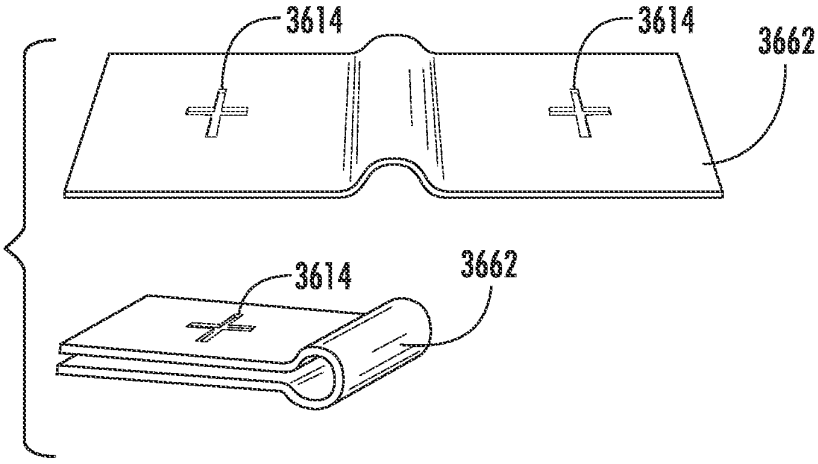

FIG. 35

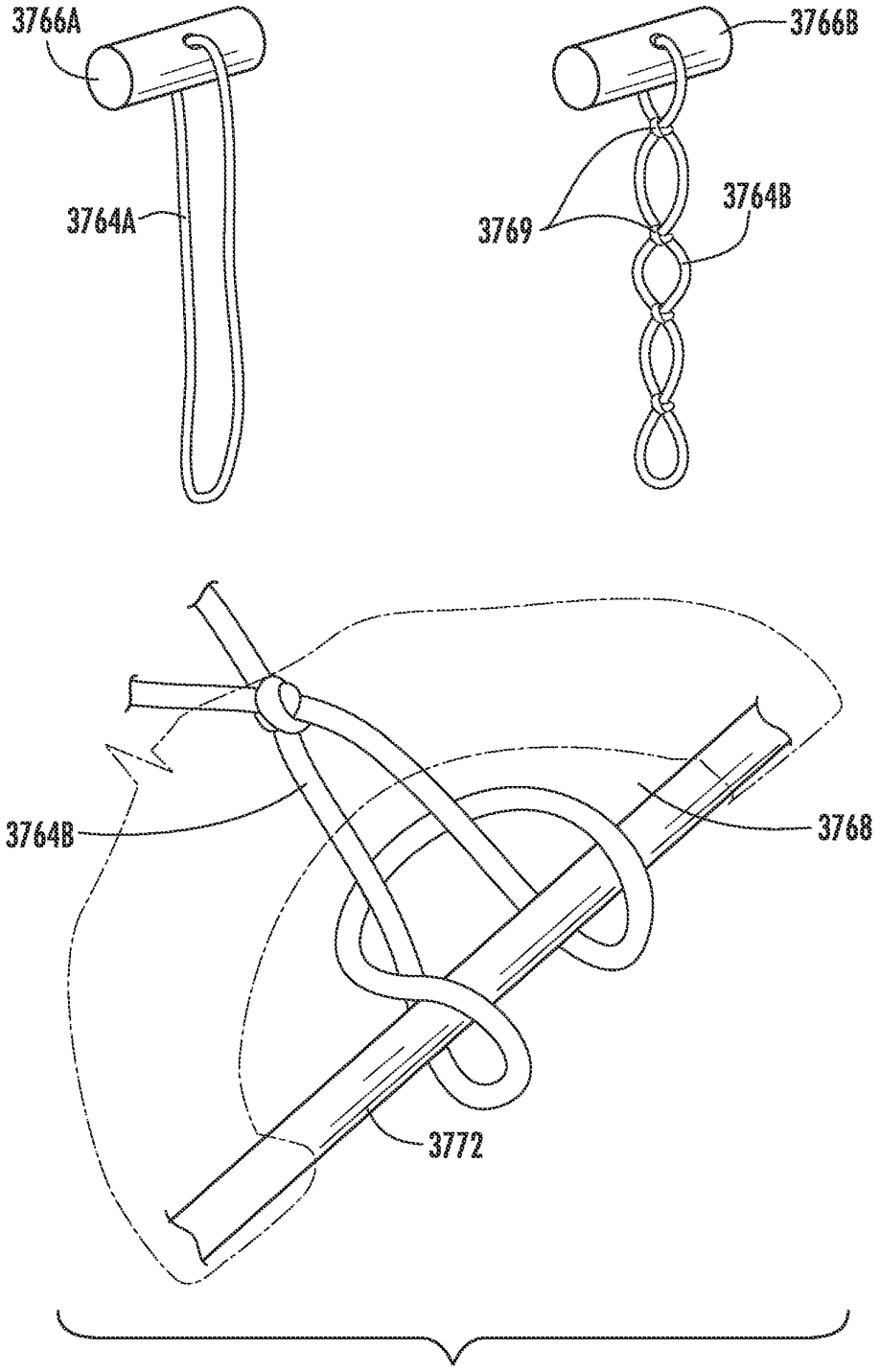

FIG. 36

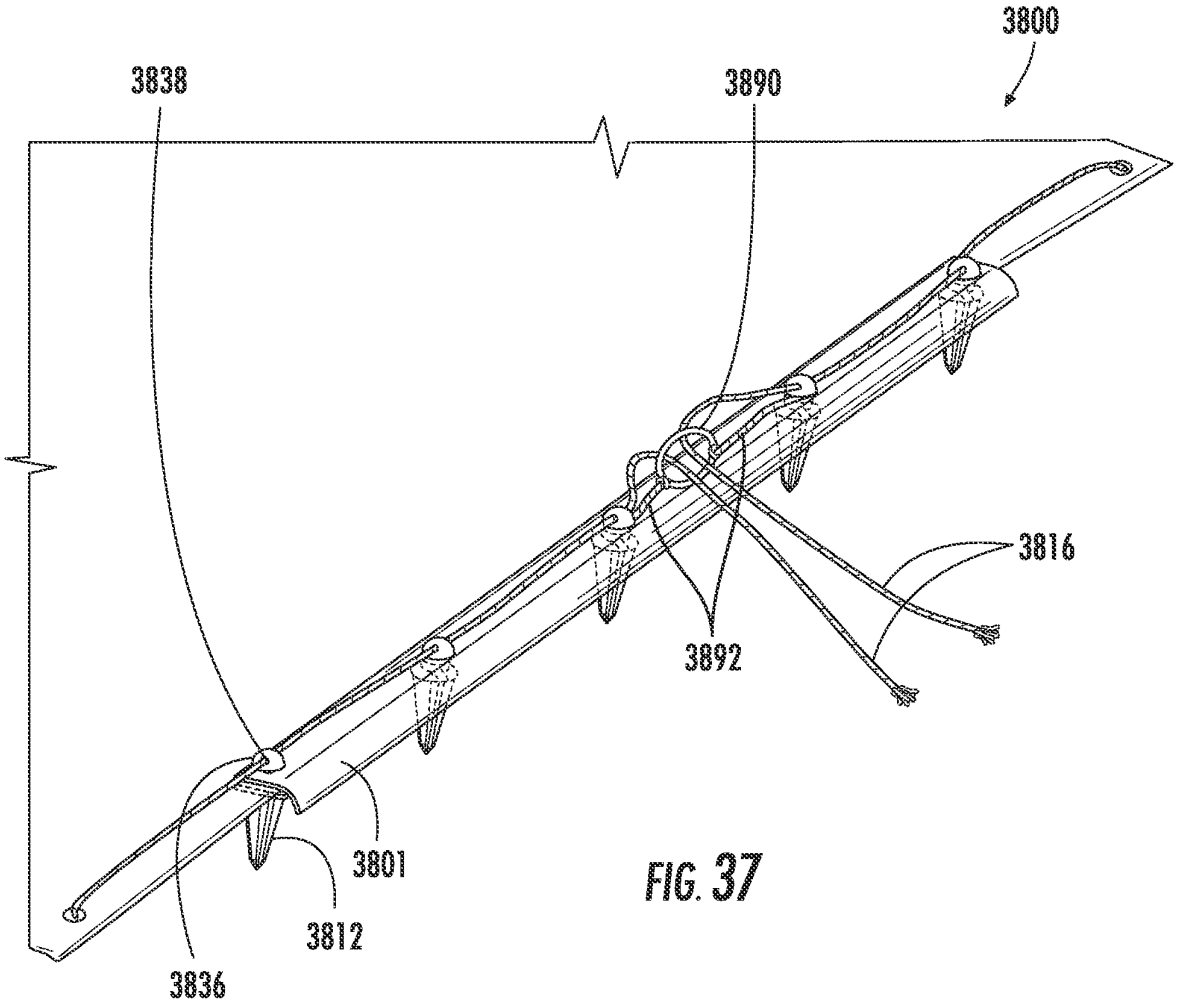

FIG. 37

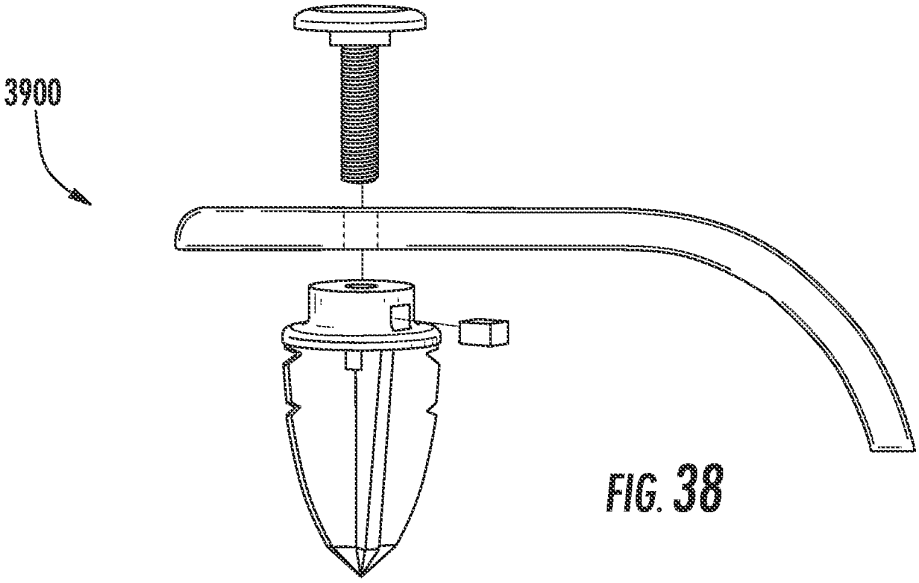

FIG. 38

PATENT COOPERATION TREATY

PCT

INTERNATIONAL SEARCH REPORT

(PCT Article 18 and Rules 43 and 44)

Applicant's or agent's file reference 6175A-005/WO/POA	FOR FURTHER ACTION	see Form PCT/ISA/220 as well as, where applicable, item 5 below.
International application No. **PCT/US2009/063500**	International filing date *(day/month/year)* **06 NOVEMBER 2009 (06.11.2009)**	(Earliest) Priority Date *(day/month/year)* 06 NOVEMBER 2008 (06.11.2008)
Applicant **NOONAN MARK**		

This International search report has been prepared by this International Searching Authority and is transmitted to the applicant according to Article 18. A copy is being transmitted to the International Bureau.

This international search report consists of a total of 3 sheets.

☐ It is also accompanied by a copy of each prior art document cited in this report.

1. **Basis of the report**
   a. With regard to the language, the international search was carried out on the basis of:
      ☒ the international application in the language in which it was filed
      ☐ a translation of the international application into _____, which is the language of a translation furnished for the purposes of international search (Rules 12.3(a) and 23.1(b))
   b. ☐ This international search report has been established taking into account the rectification of an obvious mistake authorized by or notified to this Authority under Rule 91 (Rule 43.6*bis*(a)).
   c. ☐ With regard to any nucleotide and/or amino acid sequence disclosed in the international application, see Box No. I.
2. ☐ **Certain claims were found unsearchable** (See Box No. II)
3. ☐ **Unity of invention is lacking** (See Box No. III)
4. With regard to the title,
   ☒ the text is approved as submitted by the applicant.
   ☐ the text has been established by this Authority to read as follows:
5. With regard to the abstract,
   ☒ the text is approved as submitted by the applicant.
   ☐ the text has been established, according to Rule 38.2, by this Authority as it appears in Box No. IV. The applicant may, within one month from the date of mailing of this international search report, submit comments to this Authority.
6. With regard to the drawings,
   a. the figure of the drawings to be published with the abstract is Figure No. 26
      ☒ as suggested by the applicant.
      ☐ as selected by this Authority, because the applicant failed to suggest a figure.
      ☐ as selected by this Authority, because this figure better characterizes the invention.
   b. ☐ none of the figure is to be published with the abstract.

INTERNATIONAL SEARCH REPORT

International application No.
PCT/US2009/063500

A. CLASSIFICATION OF SUBJECT MATTER

E01H 1/12(2006.01)i

According to International Patent Classification (IPC) or to both national classification and IPC

B. FIELDS SEARCHED

Minimum documentation searched (classification system followed by classification symbols)

E01H 1/12; A47L 13/52; B65F 1/14; E01H 15/00

Documentation searched other than minimum documentation to the extent that such documents are included in the fields searched

Korean utility models and applications for utility models
Japanese utility models and applications for utility models
(Chinese Patents and application for patent)

Electronic data base consulted during the international search (name of data base and, where practicable, search terms used)

eKOMPASS(KIPO internal) & Keywords: leaf, funnel, sheet

C. DOCUMENTS CONSIDERED TO BE RELEVANT

Category*	Citation of document, with indication, where appropriate, of the relevant passages	Relevant to claim No.
A	WO 2005-106128 A1 (FITZGERALD, EDDIE) 10 November 2005 See claims 1-12 and figures 1-4.	1-60
A	JP 2003-237904 A (UENO MAMORU) 27 August 2003 See claims 1-4 and figures 1-17.	1-60
A	KR 20-0437964 Y1 (AN,YOUNG-NAM) 11 January 2008 See claims 1-2 and figures 1-8.	1-60
A	KR 20-0187935 Y1 (MUN,SU-JIN) 15 July 2000 See claims 1-5 and figures 1-6.	1-60

☐ Further documents are listed in the continuation of Box C. ☒ See patent family annex.

* Special categories of cited documents
"A" document defining the general state of the art which is not considered to be of particular relevance
"E" earlier application or patent but published on or after the international filing date
"L" document which may throw doubts on priority claim(s) or which is cited to establish the publication date of citation or other special reason (as specified)
"O" document referring to an oral disclosure, use, exhibition or other means
"P" document published prior to the international filing date but later than the priority date claimed
"T" later document published after the international filing date or priority date and not in conflict with the application but cited to understand the principle or theory underlying the invention
"X" document of particular relevance; the claimed invention cannot be considered novel or cannot be considered to involve an inventive step when the document is taken alone
"Y" document of particular relevance; the claimed invention cannot be considered to involve an inventive step when the document is combined with one or more other such documents,such combination being obvious to a person skilled in the art
"&" document member of the same patent family

Date of the actual completion of the international search	Date of mailing of the international search report
31 MAY 2010 (31.05.2010)	**31 MAY 2010 (31.05.2010)**
Name and mailing address of the ISA/KR Korean Intellectual Property Office Government Complex-Daejeon, 139 Seonsa-ro, Seo-gu, Daejeon 302-701, Republic of Korea Facsimile No. 82-42-472-7140	Authorized officer KIM, Jin Young Telephone No. 82-42-481-8220

Form PCT/ISA/210 (second sheet) (July 2009)

INTERNATIONAL SEARCH REPORT

Information on patent family members

International application No.
PCT/US2009/063500

Patent document cited in search report	Publication date	Patent family member(s)	Publication date
WO 2005-106128 A1	10.11.2005	AU 2005-238091 A1	10.11.2005
		AU 2005-238091 A1	10.11.2005
		AU 2005-238091 B2	12.11.2009
		AU 2005-238091 B2	12.11.2009
		CA 2565234-A1	10.11.2005
		CN 100482895 C	29.04.2009
		CN 101010462 A	01.08.2007
		CN 101010462 A	01.08.2007
		CN 101010462 CO	01.08.2007
		EP 1756370 A1	28.02.2007
		NZ551784A	31.05.2009
		US 2007-0169290 A1	26.07.2007
		US 2007-169290 A1	26.07.2007
		WO 2005-106128 A1	10.11.2005
JP 2003-237904 A	27.08.2003	None	
KR 20-0437964 Y1	11.01.2008	None	
KR 20-0187935 Y1	15.07.2000	None	

PATENT COOPERATION TREATY

From the
INTERNATIONAL SEARCHING AUTHORITY

To:
FUSSNER ANTHONY G.

HARNESS, DICKEY & PIERCE, P.L.C. 7700
BONHOMME, SUITE 400 ST. LOUIS MISSOURI 63105
USA

PCT

WRITTEN OPINION OF THE INTERNATIONAL SEARCHING AUTHORITY

(PCT Rule 43bis.1)

Date of mailing *(day/month/year)* **31 MAY 2010 (31.05.2010)**

Applicant's or agent's file reference
6175A-005/WO/POA

FOR FURTHER ACTION
See paragraph 2 below

International application No.	International filing date *(day/month/year)*	Priority date *(day/month/year)*
PCT/US2009/063500	**06 NOVEMBER 2009 (06.11.2009)**	06 NOVEMBER 2008 (06.11.2008)

International Patent Classification (IPC) or both national classification and IPC

E01H 1/12(2006.01)

Applicant

NOONAN MARK

1. This opinion contains indications relating to the following items:

- ☒ Box No. I Basis of the opinion
- ☐ Box No. II Priority
- ☐ Box No. III Non-establishment of opinion with regard to novelty, inventive step and industrial applicability
- ☐ Box No. IV Lack of unity of invention
- ☒ Box No. V Reasoned statement under Rule 43bis.1(a)(i) with regard to novelty, inventive step or industrial applicability; citations and explanations supporting such statement
- ☐ Box No. VI Certain documents cited
- ☒ Box No. VII Certain defects in the international application
- ☒ Box No. VIII Certain observations on the international application

2. **FURTHER ACTION**
If a demand for international preliminary examination is made, this opinion will be considered to be a written opinion of the International Preliminary Examining Authority ("IPEA") except that this does not apply where the applicant chooses an Authority other than this one to be the IPEA and the chosen IPEA has notified the International Bureau under Rule 66.1bis(b) that written opinions of this International Searching Authority will not be so considered.

If this opinion is, as provided above, considered to be a written opinion of the IPEA, the applicant is invited to submit to the IPEA a written reply together, where appropriate, with amendments, before the expiration of 3 months from the date of mailing of Form PCT/ISA/220 or before the expiration of 22 months from the priority date, whichever expires later.
For further options, see Form PCT/ISA/220.

3. For further details, see notes to Form PCT/ISA/220.

Name and mailing address of the ISA/KR	Date of completion of this opinion	Authorized officer
Korean Intellectual Property Office Government Complex-Daejeon, 139 Seonsa-ro, Seo-gu, Daejeon 302-701, Republic of Korea Facsimile No. 82-42-472-7140	31 MAY 2010 (31.05.2010)	KIM, Jin Young Telephone No.82-42-481-8220

WRITTEN OPINION OF THE INTERNATIONAL SEARCHING AUTHORITY	International application No. PCT/US2009/063500

Box No. 1 Basis of this opinion

1. With regard to the language, this opinion has been established on the basis of:

   ☒ the international application in the language in which it was filed

   ☐ a translation of the international application into _____, which is the language of a translation furnished for the purposes of international search (Rules 12.3(a) and 23.1(b))

2. ☐ This opinion has been established taking into account the rectification of an obvious mistake authorized by or notified to this Authority under Rule 91 (Rule 43*bis*.1(a))

3. With regard to any nucleotide and/or amino acid sequence disclosed in the international application, this opinion has been established on the basis of:

   a. a sequence listing filed or furnished
      ☐ on paper
      ☐ in electronic form

   b. time of filing or furnishing
      ☐ contained in the international application as filed.
      ☐ filed together with the international application in electronic form.
      ☐ furnished subsequently to this Authority for the purposes of search.

4. ☐ In addition, in the case that more than one version or copy of a sequence listing has been filed or furnished, the required statements that the information in the subsequent or additioanl copies is identical to that in the application as filed or does not go beyond the application as filed, as appropriate, were furnished.

5. Additional comments:

WRITTEN OPINION OF THE INTERNATIONAL SEARCHING AUTHORITY

International application No.
PCT/US2009/063500

Box No. V Reasoned statement under Rule 43bis.1(a)(i) with regard to novelty, inventive step or industrial applicability; citations and explanations supporting such statement

1. Statement

Novelty (N)	Claims	1-60	YES
	Claims	NONE	NO
Inventive step (IS)	Claims	1-60	YES
	Claims	NONE	NO
Industrial applicability (IA)	Claims	1-60	YES
	Claims	NONE	NO

2. Citations and explanations :

Reference is made to the following documents:

D1: WO 2005-106128 A1 (FITZGERALD, EDDIE) 10 November 2005
D2: JP 2003-237904 A (UENO MAMORU) 27 August 2003
D3: KR 20-0437964 Y1 (AN,YOUNG-NAM) 11 January 2008
D4: KR 20-0187935 Y1 (MUN,SU-JIN) 15 July 2000

1. Novelty and Inventive step

1.1 Independent Claims (claims 1,20,40,50)

The technical feature of claim 1 is characterized by a reconfigurable funneling apparatus having generally opposing edges of the sheet. None of the prior art documents disclose the said technical feature, nor is it obvious to a person skilled in the art.

Claim 20 is directed to an apparatus comprising an edge device, the edge device is releasably attached to the sheet of material. None of the prior art documents disclose the said technical feature, nor is it obvious to a person skilled in the art.

Claim 40 relates to a funneling apparatus including the first and second edge portions are detached from one another. None of the prior art documents disclose the said technical feature, nor is it obvious to a person skilled in the art.

Claim 50 describes one spike having upper and lower portions and the one spike is configured for driving into the ground. None of the prior art documents disclose the said technical feature, nor is it obvious to a person skilled in the art.

Accordingly, claims 1, 20, 40 and 50 satisfies the criteria set out in PCT Article 33(2) and (3) with respect to novelty and inventive step.

Continued on Supplemental Box

WRITTEN OPINION OF THE
INTERNATIONAL SEARCHING AUTHORITY

International application No.
PCT/US2009/063500

Box No. VII Certain defects in the international application

The following defects in the form or contents of the international application have been noted:

Multiple dependent claims 4-10, 13-15, 17-19, 25-39, 43-49, 53-60 refers to other multiple depenent claims. Accordingly, claims 4-10, 13-15, 17-19, 25-39, 43-49, 53-60 do not meet the requirements of PCT Rule 6.4(a).

WRITTEN OPINION OF THE
INTERNATIONAL SEARCHING AUTHORITY

International application No.
PCT/US2009/063500

Box No. VIII Certain observations on the international application

The following observations on the clarity of the claims, description, and drawings or on the question whether the claims are fully supported by the description, are made:

Claims 11 ,12 and 16 refers to claims that do not comply with PCT Rule 6.4 (a), which leads to doubt concerning the matter for which protection is sought, thereby rendering claims 11, 12 and 16 unclear (PCT Article 6).

Supplemental Box

In case the space in any of the preceding boxes is not sufficient.
Continuation of:

1.2 Dependent Claims (claims 2-19, 21-39, 41-49, 51-60)

Claims2-19, 21-39, 41-49, 51-60 respectively depend on claims 1, 20, 40 and 50 and consequently, they also satisfy the criteria set out in PCT Article 33(2) and (3) with respect to novelty and inventive step.

2. Industrial Applicability

Claims 1-60 are industrially applicable under PCT Article 33(4).

I hereby certify that this paper (along with any paper referred to as being attached or enclosed) is being transmitted via the Office electronic filing system in accordance with § 1.6(a)(4).

Dated: October 29, 2010
Electronic Signature for Anthony G. Fussner, Reg. No. 47,582: /Anthony G. Fussner/

PATENT

IN THE UNITED STATES PATENT AND TRADEMARK OFFICE

Application No.:	To be assigned
Filing Date:	October 29, 2010
Applicant:	Mark Noonan
Group Art Unit:	To be assigned
Examiner:	To be assigned
Title:	Devices and Methods Relating to the Cleanup of Leaves, to Pouring or Filling Non-Liquids, and/or to Reconfigurable Funneling Apparatus
Attorney Docket:	6175A-000005/US/CPB

Commissioner for Patents
P.O. Box 1450
Alexandria, VA 22313-1450

INFORMATION DISCLOSURE STATEMENT

Sir:

Pursuant to 37 C.F.R. §§ 1.56, 1.97 and 1.98, Applicant hereby submits an Information Disclosure Statement for consideration by the Examiner.

I. LIST OF PATENTS, PUBLICATIONS, AND OTHER INFORMATION

The patents, publications and other information requested to be considered by the Office (except unpublished U.S. patent applications) are listed on Form 1449 attached hereto.

II. COPIES

A. ☒ Submitted herewith is a legible copy of (i) each foreign patent; (ii) each publication or that portion which caused it to be listed, other than U.S. patents and U.S. patent application publications unless required by the Office; (iii) each unpublished U.S. application listed below in Section IV (i.e., including the specification, claims, and any drawing of the application, or that portion of the application which caused it to be listed, including any claims directed to that portion), except for such applications filed on or after June 30, 2003, pursuant to the Waiver of the Copy Requirement in 37 C.F.R. 1.98 (OG Notice dated

October 19, 2004); and (iv) all other information or that portion which caused it to be listed.

B. ☐ Any patents, publications or other information which are listed on Form 1449 or on the copies of PTO-892, but which are not enclosed herewith, were previously cited by or submitted to the PTO in one of the following applications which has been relied upon for an earlier filing date under 35 U.S.C. § 120:

U.S. Serial Number	U.S. Filing Date

C. ☐ This is a PCT application in the entry of the National Phase in the United States. A copy of the International Search Report is attached for the Examiner's information. The documents listed on the International Search report are listed on the attached Form 1449 for consideration by the Examiner and for listing on any patent resulting from this application. If the International Search report was from the US, EPO, or JPO search authorities, copies of these references should have been supplied to the USPTO under the trilateral agreement and are believed to be in the file of the above-identified application. (MPEP 1893.03(g).)

III. CONCISE EXPLANATION OF THE RELEVANCE (check at least one box)

A. ☒ Except as may be indicated below in (B), all of the patents, publications or other information are in the English language (concise explanation not required).

B. ☒ A concise explanation of the relevance of each patent, publication or other information listed that is not in the English language is as follows (see 37 C.F.R. § 1.98(a)(3)):

1. ☐ See the attached foreign patent office communication from a counterpart foreign application:

2. ☒ An English translation is provided for JP2003-237904; An English translation of the abstract only is provided for KR20-0187935. Applicant makes no representation as to the accuracy of the translation.

3. ☒ Other: See figure drawings for KR20-0437964.

C. ☒ The following additional information is provided for the Examiner's consideration. Applicant files herewith copies of the International Search Report and Written Opinion for PCT/US2009/063500 (published as WO 2010/054157) to which the instant application claims priority. The International Search Report categorizes the following documents as category A define the general state of the art which is not considered to be of particular relevance, KR200187935, JP2003-237904, WO 2005/106128, and KR20-0437964.

IV. CROSS REFERENCE TO RELATED APPLICATION(S)

A. ☒ The Examiner is advised that the following co-pending application(s) contain(s) subject matter that may be related to the present application. By bringing this(these) application(s) to the Examiner's attention, Applicant(s) does (do) not waive the confidentiality provisions of 35 U.S.C. § 122.

Serial No.	Filing Date	Inventor(s)
PCTUS2009063500	11/06/2009	Mark Noonan

V. THIS IDS IS BEING FILED UNDER

A. ☒ **37 C.F.R. § 1.97(b):** (check only one box)

1. ☒ within three months of the filing date of a national application other than a continued prosecution application under § 1.53(d) (37 C.F.R. § 1.97(b)(1)). No fee or certification is required.

2. ☐ within three months of the date of entry of the national stage as set forth in § 1.491 in an international application (37 C.F.R. § 1.97(b)(2)). No fee or certification is required.

3. ☐ before the mailing of a first Office Action on the merits (37 C.F.R. § 1.97(b)(3)). No fee or certification is required. In the event that a first Office Action on the merits has been issued, please consider this IDS under 37 C.F.R. § 1.97(c) and see the certification under 37 C.F.R. § 1.97(e) below; or, if no certification has been made, charge our deposit account a fee in the amount of $180.00 as required by 37 C.F.R. § 1.17(p).

4. ☐ before the mailing of a first Office Action after the filing of a request for continued examination under 37 C.F.R. § 1.114. No fee or certification is required.

B. ☐ **37 C.F.R. § 1.97(c):** (check only one box)

before the mailing date of either any Final Office Action under 37 C.F.R. § 1.113, a Notice of Allowance under 37 C.F.R. § 1.311, or an action that otherwise closes prosecution.

1. ☐ No certification; therefore, a fee in the amount of $180.00 is required by 37 C.F.R. § 1.17(p).

2. ☐ See the certification below. No fee is required.

C. ☐ **37 C.F.R. § 1.97(d):**

after the mailing date of either a Final Office Action under 37 C.F.R. § 1.113 or a Notice of Allowance under 37 C.F.R. § 1.311, yet on or before payment of the issue fee.

1. ☐ See the certification below. A fee in the amount of $180.00 is required by 37 C.F.R. § 1.17(p).

VI. CERTIFICATION UNDER 37 C.F.R. § 1.97(e): (check only one box)

The undersigned hereby certifies that:

A. ☐ each item of information contained in this IDS was first cited in a communication from a foreign patent office in a counterpart foreign application not more than three months prior to the filing of this IDS (See 37 C.F.R. § 1.97(e)(1)). See further statement under 37 C.F.R. 1.704(d) below in section VII, if applicable; or

B. ☐ no item of information contained in this IDS was cited in a communication from a foreign patent office in a counterpart foreign application, and, to the knowledge of the undersigned after making reasonable inquiry, no item of information contained in this IDS was known to any individual designated in 37 C.F.R. § 1.56(c) more than three months prior to the filing of this IDS (See 37 C.F.R. § 1.97(e)(2)).

C. ☐ some of the items of information were first cited in a communication from a foreign patent office. As to this information, the undersigned hereby certifies that each item of information contained in this IDS was cited in a communication from a foreign patent office in a counterpart foreign application not more than three months prior to the filing of this IDS. As to the remaining information, the undersigned hereby certifies that no item of this remaining information contained in this IDS was cited in a communication from a foreign patent office in a counterpart foreign application, and, to the knowledge of the undersigned after making reasonable inquiry, no item of information contained in this IDS was known to any individual designated in 37 C.F.R. § 1.56(c) more than three months prior to the filing of this IDS.

VII. STATEMENT UNDER 37 C.F.R. 1.704(d)

The undersigned hereby states that:

☐ each item of information contained in this IDS was cited in a communication from a foreign patent office in a counterpart application and this communication was not received by any individual designated in 37 C.F.R. § 1.56(c) more than thirty days prior to the filing of this IDS.

VIII. PAYMENT OF FEES (check only one box, if applicable)

A. ☐ A check in the amount of $180.00 is enclosed for the above-identified fee.

B. ☐ Please charge Deposit Account No. 08-0750 in the amount of $180.00 for the above-identified fee. A duplicate copy of this paper is attached.

Please charge any additional fees or credit any overpayment pursuant to 37 C.F.R. § 1.16 or § 1.17 to Deposit Account No. 08-0750.

The above references are being cited only in the interest of candor and without any admission that they constitute statutory prior art, contain matter which anticipates the invention, or which would render the same obvious, either singly or in combination, to a person of ordinary skill in the art. Furthermore, this Information Disclosure Statement shall not be construed as a representation that a search has been made.

If it is determined that this IDS has been filed under the wrong rule, the PTO is requested to consider this IDS under the proper rule (with a petition if necessary) and charge the appropriate fee to Deposit Account No. 08-0750.

Respectfully submitted,

/Anthony G. Fussner/

Dated: October 29, 2010

By: _____
Anthony G. Fussner
Reg. No. 47,582

Harness, Dickey & Pierce, P.L.C.
7700 Bonhomme, Ste. 400
St. Louis, MO 63105
(314) 726-7500

FORM HDP-1449 (Based on Form PTO-1449)	ATTORNEY DOCKET NO.	APPLICATION NO.
PATENT AND TRADEMARK OFFICE	6175A-000005/US/CPB	To be assigned
INFORMATION DISCLOSURE CITATION (Use several sheets if necessary)	APPLICANT	
	Mark Noonan	
Sheet 1 of 2	FILING DATE	GROUP
	October 29, 2010	Unknown

U.S. PATENT DOCUMENTS

Ref. Desig.	Examiner's Initials	Document Number	Date mm/dd/year	Name	Class/ Subclass	(If appropriate) Filing Date
1.		2,073,914	03/16/1937	Wilfley		
2.		3,480,059	11/25/1969	Schoening		
3.		3,692,072	09/19/1972	Kohls		
4.		5,058,839	10/22/1991	Stevens		
5.		5,393,023	02/28/1995	Callan		
6.		5,570,862	11/05/1996	Nugent		
7.		5,593,117	01/14/1997	Alexander, III		
8.		5,871,037	02/16/1999	Feldt		
9.		6,315,143	11/13/2001	Dotts		
10.		6,554,810	04/29/2003	Wilk et al		
11.		6,994,302	02/07/2006	Simmons		
12.		7,249,792	07/31/2007	Bunten		

FOREIGN PATENT DOCUMENTS

Ref. Desig.	Examiner's Initials	Document Number	Date mm/dd/year	Country	Class/ Subclass	Translation Yes	No
1.		KR200187935	07/15/2000	KR		X-abstract only	
2.		JP2003-237904	08/27/2003	JP		X	
3.		WO 2005/106128	11/10/2005	PCT			
4.		KR20-0437964	01/11/2008	KR			X

Examiner:	Date Considered:

EXAMINER: Please initial if citation considered, whether or not citation is in conformance with MPEP 609. Draw line through citation if not in conformance and not considered. Include copy of this form with next communication to applicant.

FORM HDP-1449 (Based on Form PTO-1449)	ATTORNEY DOCKET NO.	APPLICATION NO.
	6175A-000005/US/CPB	To be assigned
PATENT AND TRADEMARK OFFICE **INFORMATION DISCLOSURE CITATION** (Use several sheets if necessary)	APPLICANT	
	Mark Noonan	
	FILING DATE	GROUP
Sheet 2 of 2	October 29, 2010	Unknown

OTHER DOCUMENTS		
Ref. Desig.	Examiner's Initials	
1.		International Search Report and Written Opinion for PCT/US2009/063500 (published as WO 2010/054157) to which the instant application claims priority; dated May 31, 2010, 9 pages
2.		http:www.shopmemphispool.com/GUZZLER-LEAF-RAKE-NET-p/3159.htm; accessed 11/3/2009; 2 pages
3.		http://www.leafreaper.com; accessed 10/30/2009; 2 pages

I hereby certify that this paper (along with any paper referred to as being attached or enclosed) is being transmitted via the Office electronic filing system in accordance with § 1.6(a)(4).

Dated: October 29, 2010 Electronic Signature for Anthony G. Fussner, Reg. No. 47,582 /Anthony G. Fussner/

Examiner:	Date Considered:

EXAMINER: Please initial if citation considered, whether or not citation is in conformance with MPEP 609. Draw line through citation if not in conformance and not considered. Include copy of this form with next communication to applicant.

(12) INTERNATIONAL APPLICATION PUBLISHED UNDER THE PATENT COOPERATION TREATY (PCT)

(19) World Intellectual Property Organization
International Bureau

(43) International Publication Date
10 November 2005 (10.11.2005)

PCT

(10) International Publication Number
WO 2005/106128 A1

(51) International Patent Classification[7]: E01H 1/12, 15/00, A01G 1/12

(21) International Application Number: PCT/AU2005/000634

(22) International Filing Date: 3 May 2005 (03.05.2005)

(25) Filing Language: English

(26) Publication Language: English

(30) Priority Data:
2004902331 3 May 2004 (03.05.2004) AU

(71) Applicant and
(72) Inventor: FITZGERALD, Eddie [AU/AU]; 14 Mary Street, Upwey, VIC 3158 (AU).

(74) Agent: F B RICE & CO; PO Box 668, 139 Rathdowne Street, Carlton, VIC 3053 (AU).

(81) Designated States *(unless otherwise indicated, for every kind of national protection available)*: AE, AG, AL, AM, AT, AU, AZ, BA, BB, BG, BR, BW, BY, BZ, CA, CH, CN, CO, CR, CU, CZ, DE, DK, DM, DZ, EC, EE, EG, ES, FI, GB, GD, GE, GH, GM, HR, HU, ID, IL, IN, IS, JP, KE, KG, KM, KP, KR, KZ, LC, LK, LR, LS, LT, LU, LV, MA, MD, MG, MK, MN, MW, MX, MZ, NA, NI, NO, NZ, OM, PG, PH, PL, PT, RO, RU, SC, SD, SE, SG, SK, SL, SM, SY, TJ, TM, TN, TR, TT, TZ, UA, UG, US, UZ, VC, VN, YU, ZA, ZM, ZW.

(84) Designated States *(unless otherwise indicated, for every kind of regional protection available)*: ARIPO (BW, GH, GM, KE, LS, MW, MZ, NA, SD, SL, SZ, TZ, UG, ZM, ZW), Eurasian (AM, AZ, BY, KG, KZ, MD, RU, TJ, TM), European (AT, BE, BG, CH, CY, CZ, DE, DK, EE, ES, FI, FR, GB, GR, HU, IE, IS, IT, LT, LU, MC, NL, PL, PT, RO, SE, SI, SK, TR), OAPI (BF, BJ, CF, CG, CI, CM, GA, GN, GQ, GW, ML, MR, NE, SN, TD, TG).

Published:
— *with international search report*

For two-letter codes and other abbreviations, refer to the "Guidance Notes on Codes and Abbreviations" appearing at the beginning of each regular issue of the PCT Gazette.

(54) Title: LEAF AND DEBRIS SWEEPER

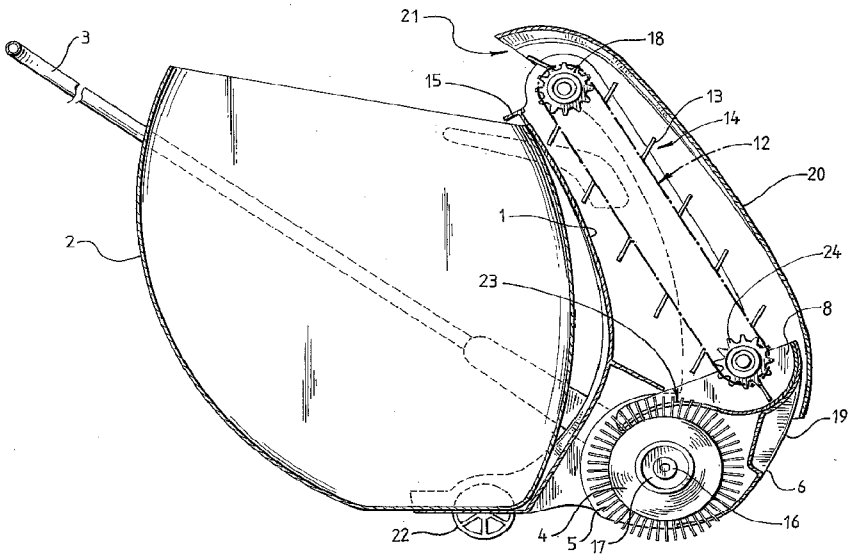

(57) Abstract: A debris collecting device comprising a rotatable drum (4) having a plurality of radially extending tynes (5) and a rake adapted to cooperate with said drum (4) wherein said rake has dual arcuate shaped blades, including a debris releasing blade (7) and a reversing blade (9) adapted to contiguously contact either side of said drum (4) over the whole length thereof at the respective leading edges thereof wherein said blades include elongate slots (11) adapted to intersect and accommodate the travel path of said tynes (5) as the drum (4) rotates such that debris pierced and picked up by said tynes (5) rotating in a first direction is dislodged for transfer to a catcher (2).

WO 2005/106128 A1

Leaf and debris sweeper

Introduction to the Invention

This inventor relates to a device for selectively sweeping and collecting debris of a defined nature from lawns, gravel, paths and the like.

Background of the Invention

Sweeping and clearing of paths, lawns and the like generally involves the gathering of leaves, paper and similar debris from an expanse of terrain, made up of lawn, grass, gravel or other surfaces of a compliant and movable nature. The terrain often includes areas of hand surface, paths, concrete, paving etc and the most frequently used tools include brooms, rakes and the like. In addition to such traditional sweeping tools, a range of powered blowers and vacuum systems are attracting increased use with a corresponding increase in noise and air pollution associated with such powered tools. In addition to all the above, some unique systems have been developed involving the careful and selective gathering of debris using innovative mechanics. This selective gathering of such debris from such surfaces can be accomplished by the use of spikes which pierce a wide range of debris where the spikes readily transverse or enter the surface of the terrain thereby picking up such piercable debris without disturbing the terrain.

Such mechanisms are known and incorporated in various debris collecting devices as disclosed in US Patents 3,451,488, 4,939,406, 5,274,989 and 5,743,076. Whilst such devices employ a fundamentally sound collecting mechanism they all suffer from drawbacks in the debris removal and collection mechanisms, particularly in the break up of debris during collection which makes complete gathering difficult. One object of the invention is to provide an improved debris collection device.

Statement of the Invention

In a first aspect the invention provides a debris collecting device comprising a rotatable drum having a plurality of radially extending tynes and a rake adapted to cooperate with said drum wherein said rake has dual arcuate shaped blades including a debris releasing blade and a reversing blade adapted to contiguously contact either side of said drum over the whole length thereof at the respective leading edges thereof wherein said blades include elongate slots adapted to intersect and accommodate the travel path of said tynes as the drum rotates such that debris pierced and picked up by said tynes rotating in a first direction is dislodged for transfer to a catcher.

The blades of the rake may have a radius greater than the radius of said drum. The leading edges of the rake preferably contact the drum at an approximately normal

position to the surface of the drum such that the apex of the rake fully accommodates said tynes thereby providing full traversal of the length of said tynes by the rake as the drum is rotated.

The debris is preferably dislodged into a reservoir positioned proximate to the rake. The debris is then preferably transferred from the reservoir via a conveyor to the catcher.

The debris releasing blade is most preferably formed as an extending lip of the debris reservoir. The conveyor most preferably includes a continuous flexible belt adapted to move in a first direction only operate in response to movement in the forward direction of the device. The belt is most preferably made up of a flexible mesh and is looped around two sets of pinions including a set of drive pinions at a first end and a set of slave pinions at a second end. The conveyor belt may include outwardly projecting steps with each step including a plurality of teeth. Alternatively, the steps may be solid and adopt an acute angle positioned relative to the conveyor.

The reservoir is most preferably shaped as a concave trough corresponding to the general travel path made by the conveyor and a particular the conveyor steps which extend outwardly from the conveyor belt. The device may include a conveyor comb positioned at the second end of the conveyor which is shaped and configured to cooperate with the movement and action of the conveyor steps wherein the comb allows teeth formed along the conveyor steps to pass through thereby dislodging any accumulated debris.

The device most preferably includes a catcher positioned at the rear thereof for receiving debris transported along the conveyor.

In an alternative embodiment the conveyor may be replaced with an auger for drawing the debris from the reservoir to the catcher.

The invention will now be described with reference to Figures 1 to 4 and the accompanying Legend.

Figure 1 shows an overall view of the device of the invention including a removable catcher.

Figure 2 shows a transparent side view of the device of the invention.

Figure 3 shows an exploded front view of the invention.

Figure 4 shows an exploded rear view of the invention.

LEGEND

1 Main Housing

2	Catcher
3	Handle
4	Drum
5	Tynes
6	Front Skirt
7	Releasing Blade
8	Reservoir
9	Reversing Blade
10	Leading edge
11	Slot
12	Conveyor
13	Step
14	Teeth (optional)
15	Comb
16	Drum pivot
17	Pulley
18	Slave Pinion
19	Drum Housing
20	Cover
21	Chute
22	Lifting Wheels
23	Extending Lip
24	Drive Pinion

Detailed description of the Invention

Referring firstly to Figure 1 which shows an overall view of the debris collecting device of the invention, including a housing 1 and a catcher 2. The housing contains the mechanicals of the device and has a handle 3 for manual operation. This embodiment of the invention is adapted for hand-held manual use and is produced on the scale of similar proportions to hand operated lawn mowers.

The housing 1 is provided with an opening at its lower edge for projection of the tynes and the opening is particularly configured to provide a clearance port which allows for the specific control of the size of debris picked up by the device. The clearance port prevents large pieces of debris from being transported into the confines of the housing and thereby assist in preventing overly large pieces of debris from clogging up the mechanicals and action of the device. Overly large pieces of debris, for

example, big pieces of bark or paper etc, will therefore be removed from the tynes as the debris encounters the clearance buffer and is withdrawn from the tynes before entry into the confines of the housing.

The mechanics of the invention comprise a rotatable drum 4 (hidden), pivoted within the housing in a horizontal orientation and adapted for rolling across the ground toward the front end of the device. The drum is provided with a plurality of evenly spaced radially extending tynes 5. The tynes operate as a continually rotating array of piercing spikes which are suitably dimensioned to extend beyond the front skirt 6 of the drum housing 19. In this manner, the device of the invention is adapted for manual operation by pushing along a piece of terrain thereby causing the drum to rotate as the projecting tynes roll over the terrain in a manner causing the tynes to penetrate or traverse the terrain being worked on. The tynes act to pierce, in a selective manner, any debris including leaves, paper and other piercable material from the surface of the terrain for collection. The operation of the device allows the user to push the device across the piece of terrain, for example a lawn or gravel path and in the process of moving the device across such piece of terrain, the drum is rotated as the tynes roll across the surface and in doing so, the tips of the tynes are caused to puncture or pierce debris of a piercable nature including leaves, paper etc. Once the debris has been penetrated, the tynes can easily negotiate the terrain without loosing the grasp of the pierced debris. As the device is pushed forward, the continual rotation of the drum causes the debris to be drawn up into the interior of the housing into a holding reservoir and conveyed to the catcher.

Referring now to the remaining Figures 2, 3 and 4, the details of the mechanicals of the device as shown with a cross-section side view in Figure 2 and exploded views in Figures 3 and 4 from the front and rear. The debris collecting device has a main housing 1, onto which are fitted most of the component mechanical parts. The principal operating component of the device is the rotatable drum 4, having a series of outwardly projecting tynes 5. The drum is rotatably fitted to the lower region of the housing 1 via a suitable axle arrangement for free rotation responsive to the device being moved backward and forward across a piece of terrain. The drum and outwardly projecting tynes are designed to pierce and transport a selective range of debris and the forward movement of the device and rotation of the drum causes debris to be drawn up within the main housing 1 and into the reservoir 8. The reservoir 8 collects the debris after removal and lifting from the tynes 5 by way of the action of the extending lip of the reservoir forming a releasing blade 7 having a plurality of slots 11 dimensioned and configured to cooperate with the extending tynes 5 of the drum. The releasing blade 7

terminates at a leading edge 10 which is configured to contiguously contact the rotating drum over the substantive length thereof within the confines of the main housing 1. In this manner, the action of the rotating drum causes debris to be pierced and picked up at a rotating tynes transported to within the main housing 1 and disengaged from the rotating tynes by interaction with a releasing blade 7. The debris is then caused to collect in the reservoir 8 by virtue of the arcuate shaping of the releasing blade and the general trough shaped configuration of the reservoir 8. The arcuate shape of the releasing blade, and in particular the radius of the releasing blade being greater than the drum provides a vastly improved debris release from the tynes of the rotating drum over the prior art devices. The extended radius of the releasing blade allows the rotating tynes to gently ease the debris off, generally intact, rather than crumbling and breaking the debris up as occurs in the prior art devices. This action allows the debris to be manoeuvred and transported more efficiently to the catcher and greatly reduces any clogging or blocking of the transport mechanisms within the device as occurs with the prior art devices. The reservoir 8 serves as a temporary holding for collective debris which is then transported away from the reservoir into the catcher 2 by way of a conveyor 12 fitted within the main housing 1 so as to cooperate with the reservoir 8.

The particular configuration of the debris releasing blade includes a radius greater than the radius of the drum such that the leading edge 10 is able to contact a drum at an approximately normal position to the surface thereof and ensure the debris therein released falls in a generally passive manner within the confines of the reservoir 8.

The conveyor includes a continuous flexible belt formed of an appropriate material most preferably including a compliant mesh where the conveyor forms a continuous rotating upwardly inclined elevator for moving the debris collected in the reservoir 8 up the main housing for dispensing into the catcher 2. The conveyor includes a plurality of outwardly projecting steps 13 formed transversely across the length of the conveyor most preferably at an acute angle to the running surface of the conveyor. The steps may include a plurality of teeth 14. The inclined angle of the conveyor thereby allows the steps to function as collecting buckets so as to draw debris from the reservoir and continuously elevate the debris up the length of the housing at a suitably inclined angle for dispensing into the catcher 2. The conveyor is operated by way of drive pinions 24 formed at a first end of the conveyor. The drive pinions are activated by cooperation with a pulley 17, positioned at the end of the drum 4. A belt, chain or other drive mechanism causes the rotation of the drive pinion or pinions 24

which thereby cause the conveyor to move. The second end of the conveyor is provided with slave pinions 18 defining the travel path of the conveyor.

The configuration of the reservoir is shaped to reflect the travel path of the conveyor steps and teeth at the first end thereof, where the reservoir takes the form of a concave trough corresponding to the general travel path of the conveyor steps. In this manner, the movement of the conveyor around the drive pinions causes the conveyor steps to traverse the reservoir and draw up therefrom the debris collected therein for transmission up the conveyor to the second end thereof and for dispensing into the catcher 2. The inclined acute angle of the steps encourages the rapid release of debris as the conveyor traverses the slave pinions and effectively thrusts the debris into the catcher. Alternatively, the second end of the conveyor may be provided with a conveyor comb 15, which is adapted to cooperate with the conveyor steps and teeth (if used) so as to ensure the debris is drawn from the conveyor and substantially prevented from travelling down the conveyor and returning to the reservoir 8. The conveyor comb also ensures optimal and coordinated dispensing of the debris raised up within the main housing for controlled dispensing into the catcher 2. The main housing is provided with a cover 20 including a leaf chute 21 at the second end thereof, which assists in directing the movement of debris into the catcher 2.

The reservoir 8 is also adapted for cooperation with a drum housing 19 designed to include a front skirt 6 terminating in a reversing blade 9 of similar configuration to the releasing blade 7. The reversing blade 9 ensures that the movement of the device in the reverse direction will prevent debris collected on the tynes from being drawn up into the drum housing and thereby clogging the mechanism. The action of the drum pulley 17 may include a ratchet system such that the movement and rotation of the conveyor only occurs in one direction, regardless of the forward or reverse movement of the device and the corresponding forward and reverse movement of the driving drum 4. The drum pulley 17 may also incorporate either a one way ratchet or a reversing mechanism such that movement of the drum in a forward or reverse direction causes the pulley 17 to rotate only in a forward direction, therefore ensuring constant movement of the conveyor in the upward lifting direction irrespective of the movement of the device in a forward or reverse direction. This ensures constant emptying of the reservoir into the catcher 2 and prevents the inadvertent movement of debris into the confines of the device.

The catcher 2 is conveniently located onto the back of the main housing 1 and the ability of the conveyor to elevate the debris allows the catcher considerable capacity before requiring to be emptied. The device of the invention may also be provided with

lifting wheels 22 which allows the device to be pivoted around the lifting wheels so as to raise the drum from the surface of the terrain so as to selectively activate the drum or avoid obstacles during use.

The invention provides for the first time, a compact highly efficient means of removing loose debris from gravel, grass or other types of terrain where the selective removal of piercable debris is required. The integrated design of the releasing blade and reservoir provides for a highly efficient means of conveying the debris as it is accumulated by elevation within the confines of the device cover for dispensing in a large capacity catcher. The provision of lifting wheels 22 underneath the catcher allows the device of the invention to accumulate a substantial weight in debris before requiring emptying and ensures adequate balance and ease of use.

The mode of operation of the invention has a high tendency to provide minimal interference with the debris by way of selective piercing and therefore does not break up the debris and cause smaller particulate matter to be distributed which would be difficult to gather. The mechanism provides that the debris remains substantially intact and can therefore be gently but persuasively compressed into the catcher in a manner that allows the catcher to retain a substantial amount of debris, thereby extending the user time of the device without having to empty the catcher. The ability of the mechanicals to provide forward and reverse operations, allows the device to be used in a similar manner to a carpet sweeper, such that repeated motion, backward and forth, across a piece of terrain allows the device to gather up substantially all suitable debris in a comprehensive and selective manner, without interfering with the terrain. The terrain can include grass, lawn, gravel, soil and all terrain that allows debris to be pierced by the tynes. The device of the invention would also operate on hard surface terrain, where debris can gather up in various layers and providing the tynes have the ability to pierce the debris, the device will work on virtually any terrain.

The invention provides for the first time, a highly efficient, user-friendly, manually operatable device for operation over a wide range of terrain, for the gathering up and collection of piercable debris. The manual operation of the invention, provides minimal environmental impact and can function to collect a wide range of debris including dry or wet leaves, paper etc. The device of the invention provides many advantages over commonly available debris handling devices including petrol operated blowers and vacuum cleaners. In addition to the devices ability to gather and collect debris, it also functions to aerate lawns and garden beds as a second action of the tynes piercing the debris. The selective action of the device does not interfere with lose terrain including gravel, dust, dirt, pebbles etc. The device can be used in all weather

conditions and is not restricted to dry weather as it can readily be used after rain, given that wet or damp debris is readily picked up and without any electrical functions, the device is safe to use in all weather conditions.

It will be appreciated by persons skilled in the art that numerous variations and/or modifications may be made to the invention as shown in the specific embodiments without departing from the spirit or scope of the invention as broadly described. The present embodiments are, therefore, to be considered in all respects as illustrative and not restrictive.

THE CLAIMS DEFINING THE INVENTION ARE AS FOLLOWS:

1. A debris collecting device comprising a rotatable drum having a plurality of radially extending tynes and a rake adapted to cooperate with said drum wherein said rake has dual arcuate shaped blades, including a debris releasing blade and a reversing blade adapted to contiguously contact either side of said drum over the whole length thereof at the respective leading edges thereof wherein said blades include elongate slots adapted to intersect and accommodate the travel path of said tynes as the drum rotates such that debris pierced and picked up by said tynes rotating in a first direction is dislodged for transfer to a catcher.

2. A debris colleting device according to claim 1, wherein the debris releasing blade has a radius greater than the radius of said drum with the leading edge thereof contacting said drum at an approximately normal position to the surface thereof.

3. A debris collecting device according to claim 1 or 2, wherein said debris is dislodged into a reservoir positioned proximate to said rake.

4. A debris collecting device according to claim 3, wherein said debris releasing blade is formed as an extending lip of said reservoir.

5. A debris collecting device according to any one of claims 1 to 4, wherein said debris is transferred to said catcher by a conveyor.

6. A debris collecting device according to any one of claims 1 to 3, wherein said conveyor includes a continuous flexible belt having a plurality of outwardly projecting steps such that the inclined angle of said conveyor allows said steps to function as buckets for drawing debris from said reservoir.

7. A debris collecting device according to claim 6, wherein said conveyor is looped around a set of drive pinions at a first end and a set of slave pinions at a second end.

8. A debris collecting device according to any one of claims 3 to 7, wherein said reservoir is shaped as a concave trough corresponding to the general travel path of said conveyor steps at said first end during traversal of said drive pinion.

9. A debris collecting device according to any one of claims 6 to 8 wherein said outwardly projecting steps are inclined at an acute angle to said conveyor.

10. A debris collecting device according to any one of claims 6 to 8, including a conveyor comb positioned at the second end of said conveyor and wherein said conveyor steps include a plurality of teeth adapted to traverse said comb so as to dislodge accumulated debris.

11. A debris collecting device according to any one of claims 1 to 10, wherein said a catcher is positioned to receive said dislodged debris.

12. A debris collecting device according to any one of claims 1 to 11, substantially as hereinbefore described with reference to the Figures.

Dated this third day of May 2005

Eddie Fitzgerald
Patent Attorneys for the Applicant:

F B RICE & CO

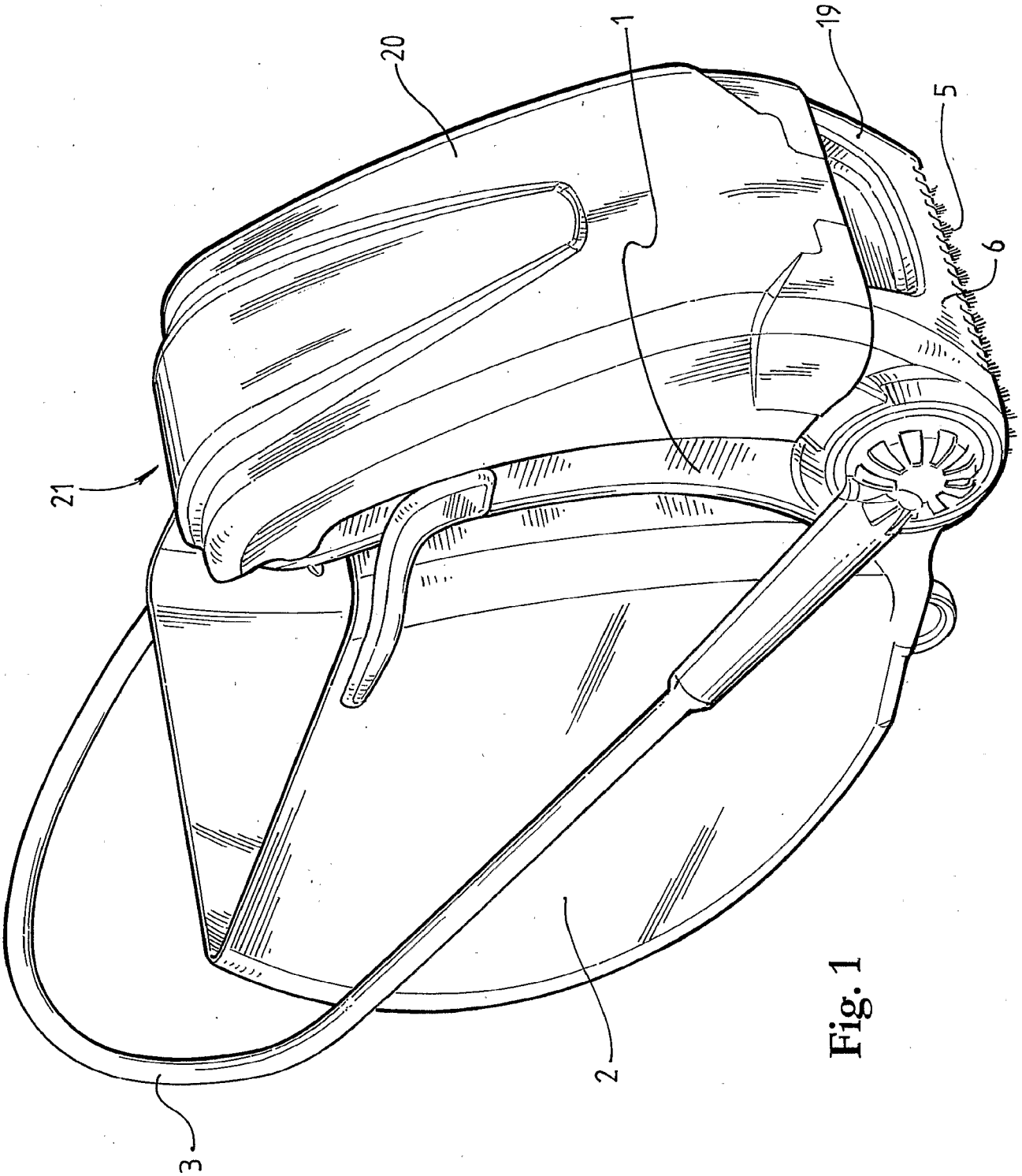

Fig. 1

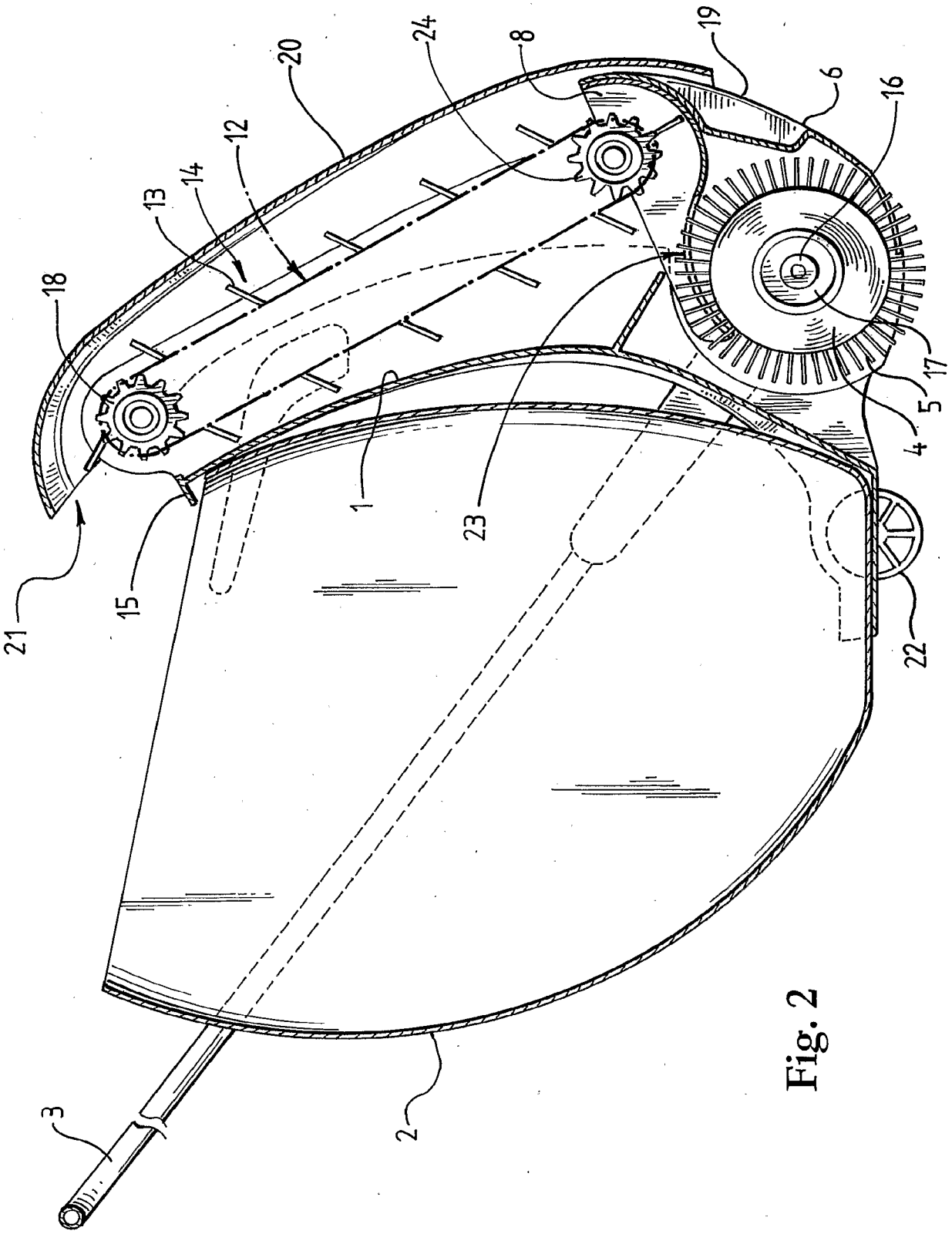

Fig. 2

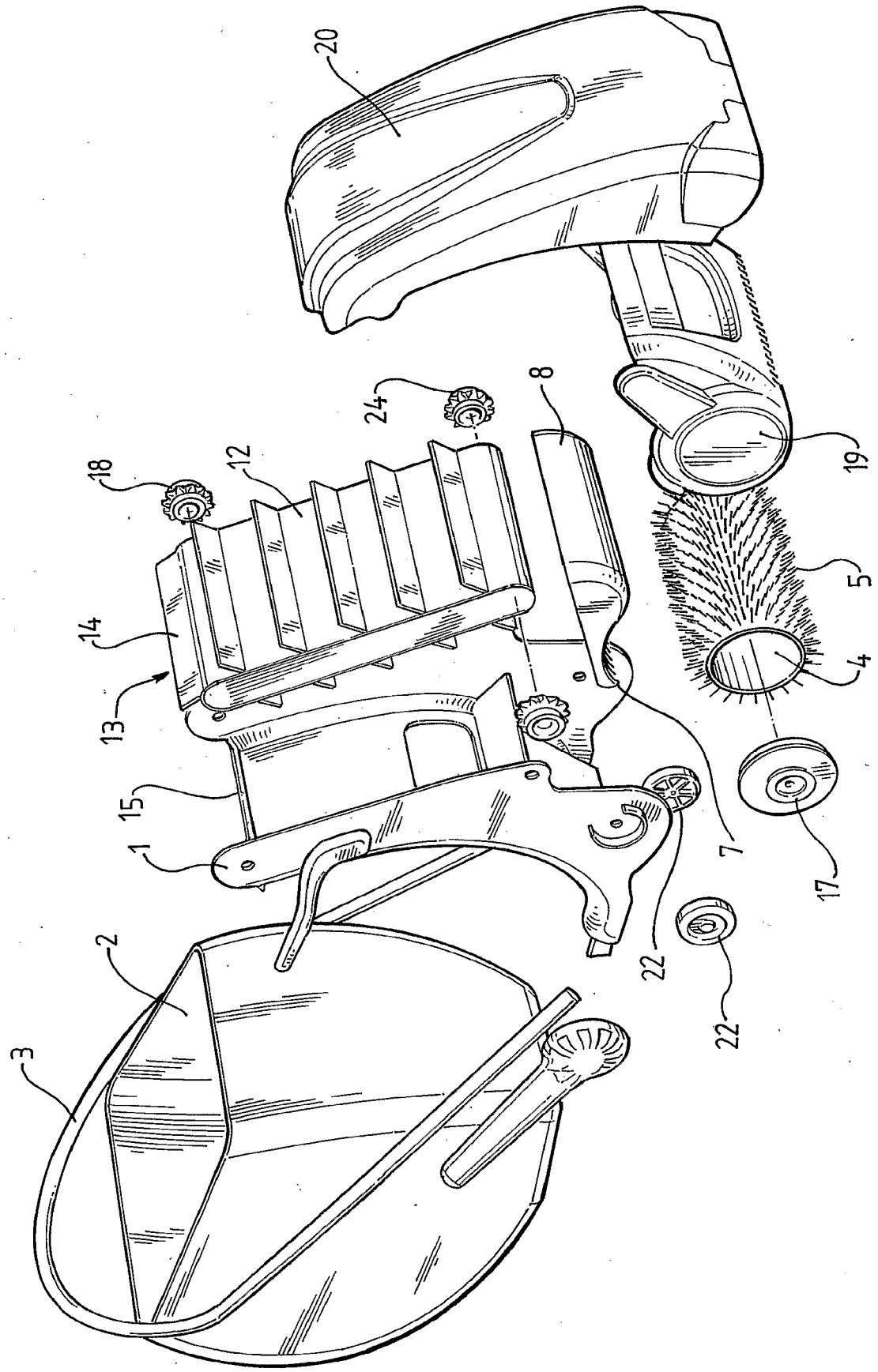

Fig. 3

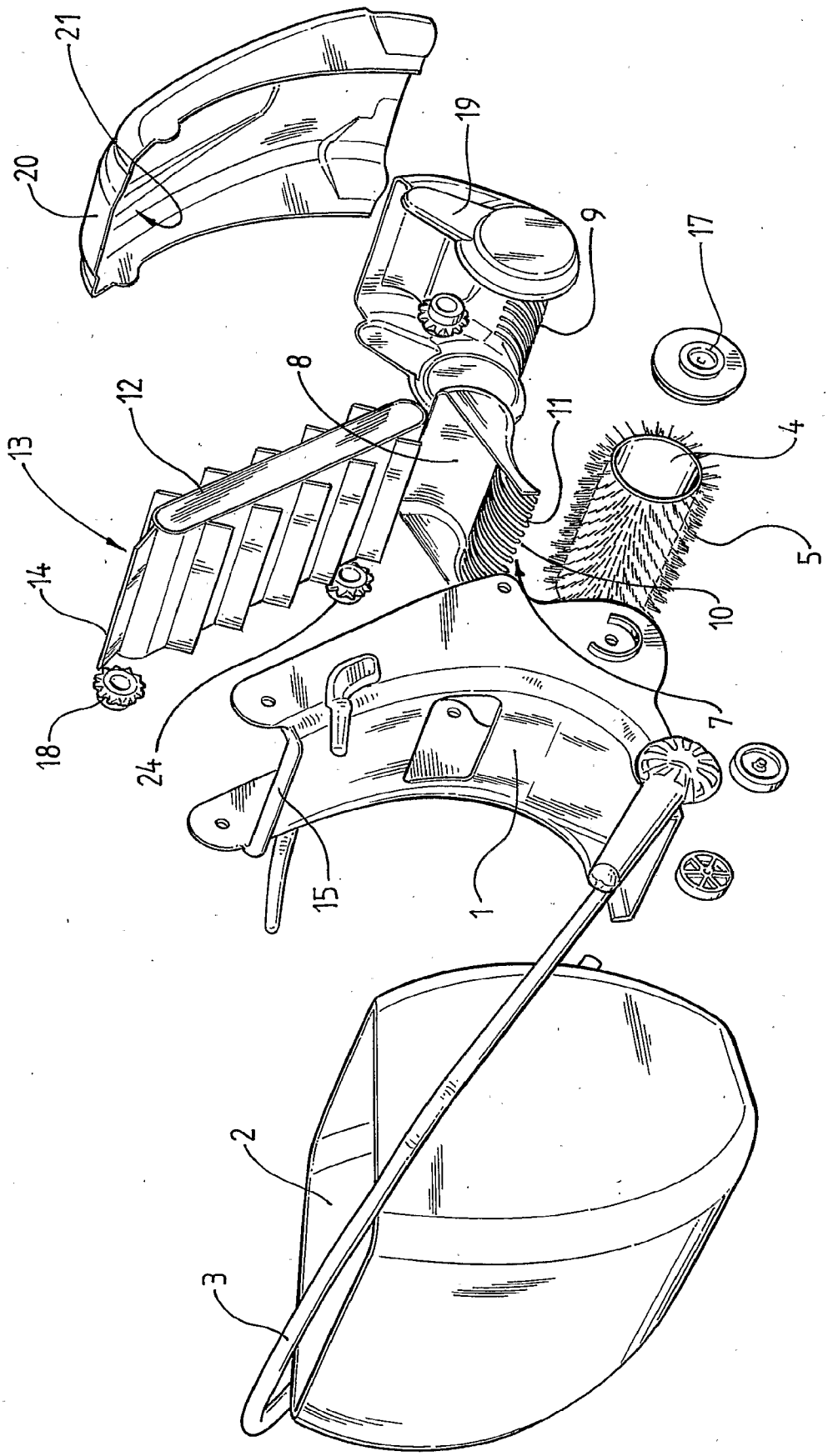

Fig. 4

INTERNATIONAL SEARCH REPORT

International application No.
PCT/AU2005/000634

A. CLASSIFICATION OF SUBJECT MATTER

Int. Cl. [7]: E01H 1/12, 15/00, A01G 1/12

According to International Patent Classification (IPC) or to both national classification and IPC

B. FIELDS SEARCHED

Minimum documentation searched (classification system followed by classification symbols)

Documentation searched other than minimum documentation to the extent that such documents are included in the fields searched

Electronic data base consulted during the international search (name of data base and, where practicable, search terms used)
DWPI IPC E01H, A01G 1/- & keywords: leaves, leaf, paper, debris, rubbish, litter, gather, collect, clear, remove, drum, roller, cylinder or similar terms.

C. DOCUMENTS CONSIDERED TO BE RELEVANT

Category*	Citation of document, with indication, where appropriate, of the relevant passages	Relevant to claim No.
A	US 4217672 A (OLIVARI) 19 August 1980 Whole document	1 – 12
A	BE 884600 A (PIRON) 1 December 1980 Whole document	1 – 12
A	GB 2224766 A (COCKING) 16 May 1990 Whole document	1 – 12
A	US 3451488 A (TAKETA) 24 June 1969 Whole document	1 – 12
A	US 5274989 A (NG) 4 January 1994 Whole document	1 – 12

☐ Further documents are listed in the continuation of Box C ☒ See patent family annex

* Special categories of cited documents:

"A" document defining the general state of the art which is not considered to be of particular relevance

"E" earlier application or patent but published on or after the international filing date

"L" document which may throw doubts on priority claim(s) or which is cited to establish the publication date of another citation or other special reason (as specified)

"O" document referring to an oral disclosure, use, exhibition or other means

"P" document published prior to the international filing date but later than the priority date claimed

"T" later document published after the international filing date or priority date and not in conflict with the application but cited to understand the principle or theory underlying the invention

"X" document of particular relevance; the claimed invention cannot be considered novel or cannot be considered to involve an inventive step when the document is taken alone

"Y" document of particular relevance; the claimed invention cannot be considered to involve an inventive step when the document is combined with one or more other such documents, such combination being obvious to a person skilled in the art

"&" document member of the same patent family

Date of the actual completion of the international search
29 June 2005

Date of mailing of the international search report
05 JUL 2005

Name and mailing address of the ISA/AU

AUSTRALIAN PATENT OFFICE
PO BOX 200, WODEN ACT 2606, AUSTRALIA
E-mail address: pct@ipaustralia.gov.au
Facsimile No. (02) 6285 3929

Authorized officer

B. NGUYEN

Telephone No : (02) 6283 2306

INTERNATIONAL SEARCH REPORT

Information on patent family members

International application No.

PCT/AU2005/000634

This Annex lists the known "A" publication level patent family members relating to the patent documents cited in the above-mentioned international search report. The Australian Patent Office is in no way liable for these particulars which are merely given for the purpose of information.

Patent Document Cited in Search Report		Patent Family Member	
US	4217672	US	4297760
BE	884600	NONE	
GB	2224766	NONE	
US	3451488	NONE	
US	5274989	NONE	

Due to data integration issues this family listing may not include 10 digit Australian applications filed since May 2001.

END OF ANNEX

print | export

Publication number: **JP2003237904 A2**
Publication country: JAPAN
Publication type: APPLICATION
Publication date: 20030827
Application number: JP20020033451
Application date: 20020212
Priority: JP20020033451 20020212 ;
Assignee[std]: UENO MAMORU ;
Inventor[std]: UENO MAMORU ;
International class[1-7]: B65F1/14 ; A47L13/52 ; B65B67/12 ; E01H1/12 ;
International class[8]: E01H1/00 20060101 I C ; E01H1/12 20060101 I A ; A47L13/10 20060101 I C ; A47L13/52 20060101 I A ; B65B67/00 20060101 I C ; B65B67/12 20060101 I A ; B65F1/14 20060101 I C ; B65F1/14 20060101 I A ;

Title: REFUSE COLLECTION BAG MOUTH HOLDER

Abstract: PROBLEM TO BE SOLVED: To provide a refuse collection bag mouth holder in which disposable shopping bags provided in supermarkets or the like, large bags used for packaging and accommodating commodities, and exclusive bags of each store in addition to vinyl bags and refuse bags on the market are used for refuse collection bags, one end of an opening peripheral edge part in each refuse collection bag is set along and substantially parallel to the ground or a floor surface, and refuse, garbage, wooden dust, dust, falling leaves, leaves and branches dropped on the ground after trimming a hedge and garden plants which are scattered on the ground and floor surfaces are directly swept into the refuse collection bag by using a broom.SOLUTION: The bag mouth holder comprises a body and a locking member which holds at least a part of the opening peripheral edge part of the refuse bag and locks the refuse bag to the body in an open condition. The body has a lower plate part having a leading edge along the ground or the floor surface, at least a part of the opening peripheral edge part of the refuse bag is locked by the locking member so as to be along the lower plate part and the refuse bag together with the bag mouth holder is used as a dustpan.

(19)日本国特許庁（ＪＰ）　(12) 公開特許公報（Ａ）　(11)特許出願公開番号
特開2003－237904
（P2003－237904A）
(43)公開日　平成15年８月27日(2003.8.27)

(51)Int.Cl.⁷	識別記号	ＦＩ		テーマコード（参考）
Ｂ６５Ｆ　1/14		Ｂ６５Ｆ　1/14	Ａ	３Ｂ０７４
			Ｂ	３Ｅ０２３
Ａ４７Ｌ　13/52	１０１	Ａ４７Ｌ　13/52	１０１	３Ｅ０５７
Ｂ６５Ｂ　67/12		Ｂ６５Ｂ　67/12	Ｃ	
Ｅ０１Ｈ　1/12		Ｅ０１Ｈ　1/12		

審査請求　未請求　請求項の数４　ＯＬ　（全 12 頁）

(21)出願番号　特願2002－33451(P2002－33451)
(22)出願日　平成14年２月12日(2002.2.12)

(71)出願人　396005379
上野　護
兵庫県城崎郡城崎町今津362
(72)発明者　上野　護
兵庫県城崎郡城崎町今津362
(74)代理人　100084630
弁理士　澤　喜代治

Ｆターム(参考)　3B074 HH02 HH03
3E023 BA03 KA02 LA03
3E057 AA01 AC03 AD10 CB01 CB04
CC20

(54)【発明の名称】　ごみ回収袋の袋口保持具

(57)【要約】
【目的】　本発明は、市販のビニール袋やごみ袋の他、スーパーマーケット等で提供される使い捨ての買物袋、商品の包装や収納に用いられていた大型の袋、各商店の専用袋などの袋をごみ回収袋として用い、このごみ回収袋における開口周縁部の一端を地面や床面に対して略平行に沿わせて、地面や床面に散乱しているごみ屑や生ごみ、木屑、塵、落葉、生け垣や庭木等を剪定した後に地面に落ちて残った枝葉などを、箒を用いて直接ごみ回収袋内に掃き入れることを可能にするごみ回収袋の袋口保持具を提供することを目的とする。
【構成】　本体と、この本体にごみ袋の開口周縁部の少なくとも一部を保持して当該ごみ袋を開口した状態で係止させるための係止部材とからなる袋口保持具であって、前記本体は、地面又は床面に対して沿う前端縁を有する下板部を備えてなり、前記ごみ袋の開口周縁部の少なくとも一部を前記下板部に沿うように前記係止部材で係止して塵取りの如く使用し得ることを特徴とする。

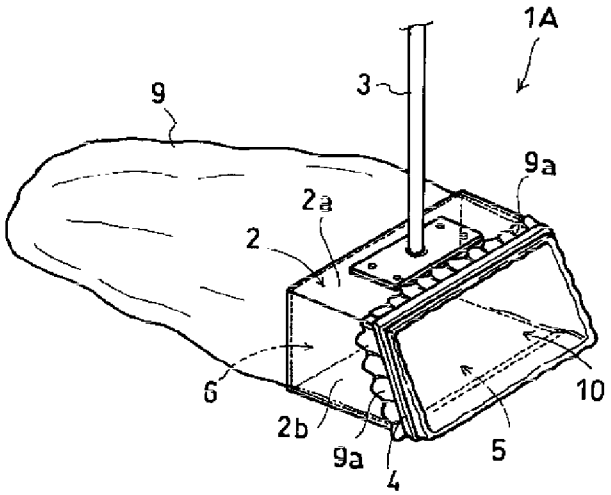

【特許請求の範囲】
【請求項１】　本体と、この本体にごみ袋の開口周縁部の少なくとも一部を保持して当該ごみ袋を開口した状態で係止させるための係止部材とからなる袋口保持具であって、前記本体は、地面又は床面に対して沿う前端縁を有する下板部を備えてなり、前記ごみ袋の開口周縁部の少なくとも一部を前記下板部に沿うように前記係止部材で係止して塵取りの如く使用し得ることを特徴とする袋口保持具。
【請求項２】　本体が、地面又は床面に対して沿う前端縁を有する下板部を備えてなる枠状体である請求項１に記載の袋口保持具。
【請求項３】　本体には、柄が設けられている請求項１又は２に記載の袋口保持具。
【請求項４】　本体には、ごみ袋の開口部を略覆蓋することができる蓋部が設けられている請求項１ないし３のいずれか１項に記載の袋口保持具。
【発明の詳細な説明】
【０００１】
【発明の属する技術分野】本発明は、地面や床面等に散乱しているごみ屑や生ごみ、木屑、塵、落葉、生け垣や庭木等を剪定した後に地面に落ちて残った枝葉などを、箒等を用いて直接ごみ袋内に掃き入れることができる袋口保持具に関する。
【０００２】
【従来の技術】地面や床面に散乱しているごみ屑や生ごみ、木屑、塵、落葉、生け垣や庭木等を剪定した後に地面に落ちて残った枝葉などのごみになるものを片づける場合、従来では、これらを箒で掃き集めて塵取りに掃き入れた後、塵取り内のごみをごみ箱やごみ袋に移したり、塵取りに入れたごみを近くの焼却場や捨て場まで持ち運んで償却ないし捨てるようにしていた。
【０００３】
【発明が解決しようとする課題】しかしながら、このようにごみを塵取りに掃き入れてごみ箱やごみ袋内に入れるようにすると、風が強い日に落葉を掃き集めて塵取りに入れたときに、また、塵取り内の落葉をごみ箱やごみ袋内に移すときに、落葉等が風で吹き飛ばされて飛散することがあり、このようになると、掃き掃除が徒労に帰したり無駄になり、散った落葉を再び掃き集めて回収しなければならなかった。
【０００４】また、箒と塵取りを持って落葉を掃き集めて回収するときに、ごみ袋を手で持つと邪魔になるので、ごみ袋を地面に置くことになるが、このときに風でごみ袋やごみ袋内の落葉等が飛ばされることもあった。
【０００５】更に、晩秋になると、木の多い公園や街路樹の下では、落葉が一面に広がって落ちており、このように大量の落葉を箒と塵取りを用いて回収しようとすると、すぐに塵取りの中が落葉でいっぱいになり、何度も塵取り内の落葉をごみ箱やごみ袋内に移すという手間の掛かる作業が必要であった。
【０００６】このような課題は、大きな生け垣や庭木等の剪定後に地面に落ちて残った大量の枝葉を回収するとき、及び多くのごみを回収するときにもあった。
【０００７】本発明者は、上述の課題を解消する塵取りはできないものかと鋭意、検討を重ねた結果、遂に本発明に係る新規なごみ回収袋の袋口保持具を発明するに至ったのである。
【０００８】このような経緯を経て完成するに至った本発明は、市販のビニール袋やごみ袋の他、スーパーマーケット等で提供される使い捨ての買物袋、商品の包装や収納に用いられていた大型の袋、各商店の専用袋などのごみ袋をごみ回収袋として用い、このごみ袋における開口部の一端を地面や床面に対して略平行に沿わせて、地面や床面に散乱しているごみ屑や生ごみ、木屑、塵、落葉、生け垣や庭木等を剪定した後に地面に落ちて残った枝葉などを、箒を用いて直接ごみ回収袋等のごみ袋内に掃き入れることを可能にする袋口保持具を提供することを目的とする。
【０００９】
【課題を解決するための手段】以上の課題を解決するための手段として提案される本発明の袋口保持具は、本体と、この本体に、例えば市販のビニール袋やごみ袋の他、スーパーマーケット等で提供される使い捨ての買物袋、商品の包装や収納に用いられていた大型の袋、各商店の専用袋などのごみ袋の開口周縁部の少なくとも一部を保持して当該ごみ袋を開口した状態で係止させるため係止部材とからなる袋口保持具であって、前記本体は、地面又は床面に対して沿う前端縁を有する下板部を備えてなり、前記ごみ袋の開口周縁部の少なくとも一部を前記下板部に沿うように前記係止部材で係止して塵取りの如く使用し得ることを特徴とするものである。
【００１０】即ち、本発明に係る袋口保持具は、ごみ回収袋等のごみ袋における開口部の一端を地面や床面に対して略平行に沿わせて、ごみを箒で掃き入れることができるようにするものである。
【００１１】前述した如く、本発明において使用されるごみ回収袋は、特に限定されるものではなく、市販のビニール袋やごみ袋の他、スーパーマーケット等で提供される使い捨ての買物袋、商品の包装や収納に用いられていた大型の袋、各商店の専用袋などの種々のごみ袋を好適に用いることができる。
【００１２】市販のビニール袋やごみ袋は、樹脂製のフィルムで出来た長方形の袋で、その大きさが、例えば、４５リットル用のもの、７０リットル用のものなど各種のものが市販されているが、いずれの大きさのものも本発明の袋口保持具に適用できる。
【００１３】又、スーパーマーケット等で提供される使い捨ての買物袋は、一般に高密度ポリエチレン製のフィルムで形成されており、耐水性に富み、丈夫であり、ま

た買物の度に各家庭に持ち帰られてその後、不要になることが多いことから、この袋は容易に手に入り、濡れたゴミ屑等だけでなく、生ゴミ、路上や庭にされた犬猫等の糞も問題なく回収できる上、その大きさも各種のものがあるが、本発明の保持具に適用される買物袋は、必ずしも限定されるものではないが、落ち葉等、軽量で嵩張るごみを多く収容できる結果、できるだけ容量が大きいものを好適とする。

【００１４】更に、商品の包装や収納に用いられていた大型の袋には、例えば大型テレビ、デスクトップパソコンなどの製品は、消費者が購入したときには段ボール箱内に透明のビニール製の袋で包まれており、これらの購入後にはこの大きなビニール製の袋が不要になることから、この袋をごみ回収用の袋として利用する。この他、米を５ｋｇ詰め及び１０ｋｇ詰めにして市販しているビニール製の米袋も適用の対象となる。

【００１５】加えて、各商店の専用袋とは、紙袋、耐水又は防水加工された紙袋、合成樹脂製のフィルムでできた袋などの使い捨ての袋、これらの素材又は丈夫な織布又は不織布で出来た繰り返し利用できる袋などが挙げられる。

【００１６】そして、本発明の袋口保持具は、前記ごみ袋の開口周縁部の少なくとも一部を、地面又は床面に対して平行ないし略平行に前端縁を有する下板部に沿うように、後述する係止部を用いて係止して、塵取りの如く、ごみを箒で掃き入れることができるようするものである。

【００１７】この本体に備えられた下板部の形状については、地面又は床面に対して平行ないし略平行となる前端縁を有するものであれば、特に限定されるものではなく、使用目的等に応じて適宜決定すればよいのであり、又、その大きさや幅についても、人が手で持って運ぶことができ、箒を用いて効率良くごみを掃き入れる程度の大きさや幅のものであれば特に限定されるものではない。

【００１８】ここで「前端縁」とは、下板部前方の端縁部のことをいうのであるが、例えば、地面や床面にあるごみをごみ袋に履き入れる際に地面等と下板部前方との間に空間ができると、本体の縁にごみが引っかかったりするため、本発明においては、この部分（前端縁）については地面又は床面に対して平行ないし略平行となるように構成して、ごみがスムーズにごみ袋に掃き入れられるようにする必要がある。

【００１９】なお、「地面又は床面に対して平行ないし略平行」とは、厳密な平行まで求める意味ではなく、地面等と下板部前方との間に余分（過剰）な空間ができない程度の平行が得られるようにするという意味である。

【００２０】本発明の袋口保持具においては、前記下板部について、複数の板材やレール等を用いたスライド構造や折り畳み構造、或いははめ込み構造等を採用することによって、その幅をフレキシブルに変えることができるようにすることが好ましく、これにより、使用する目的やごみ袋の開口部の大きさ等に応じて、任意にその幅を変更することもできる。

【００２１】なお、この下板部の間口や前後幅（奥行き）については、特に限定してされるものではないが、一般的には、数ｃｍ〜５０ｃｍ程度の前後幅を有するものが好適である。

【００２２】勿論、この本体は、この前後幅（奥行き）が数ｃｍ〜１０ｃｍというような極端に短いものであっても良いのである。この場合には、本体が軽量になるため、持ち運びし易くなるという利点がある。

【００２３】又、本発明の袋口保持具において、本体としては、下板部のみからなるものであってもよいが、この構成のものは、使用の際にごみ袋の一端を使用者が手で持ち上げてごみ袋を開口させる必要があるため、使用者がかがんだ姿勢で作業をする必要が生じたり、手が汚れたりする場合もある。

【００２４】そこで、本発明の袋口保持具において、本体の好ましい構成としては、例えば、下板部から上方に向かって、柱状部材を設けたり、下板部の片側或いは両側の端縁に側壁部材を設けて、取り付けたごみ袋を立ち上げて、開口部が拡がるようにすることが挙げられる。

【００２５】更に、本発明の袋口保持具において、本体の好ましい構成としては、本体が、少なくとも地面又は床面に対して沿う（平行ないし略平行となる）前端縁を有する下板部を備えてなる枠状体であるものが挙げられる。

【００２６】即ち、本体を枠状体とすることにより、機械的強度が向上し、特に取り付けたごみ袋がその重みにより垂れ下がり、ごみ袋の開口部が閉塞する状態を回避することができるのである。

【００２７】なお、本発明において「枠状体」とは、正面視長方形ないし正面視略長方形のものや正面視正方形ないし正面視略正方形のみに限定されるものではなく、半円型、半楕円型、かまぼこ型あるいは五角形や六角形等の多角形型も含まれるのであり、このように構成することにより、一層取り付けたごみ袋の開口部を大きく広げることができるが、この「枠状体」は、少なくとも地面又は床面に対して沿う（平行ないし略平行となる）前端縁を有する下板部を備えてなることを要する。

【００２８】又、本発明においては、本体として、柱状部材を設けたものや、下板部の片側或いは両側の端縁に側壁部材を設けたもの、或いは、枠状体のものを採用した場合にあっては、柱状部材や側壁部材等について、折り畳んで本体をコンパクト化できるように構成することが好ましく、このように構成することにより、携帯性が一層向上したり、又、本発明の袋口保持具を使用しない場合等において、収納が簡便となり、大きな収納場所を必要としなくなるのである。

【００２９】ところで、本発明において、本体として前記枠状体を採用する場合にあっては、その下板部の前端部を前方に突出させることが好ましい。

【００３０】本体の下板部における前端部を前方に突出させた形状にすると、箒の先端をごみ回収袋の袋口内まで送り込んでごみ等を容易に掃き入れることができるため、掃きこぼれがなくなり、掃き難さも解消できる。また、箒を用いてごみを袋口内に掃き入れるときに、作業者が自然に立ったままの姿勢でこの袋口を見ることができるので、掃除のときに前屈みになる必要がなく、楽な姿勢でごみを掃き入れることができる。

【００３１】又、本発明においては、前記本体の前端縁若しくはその近傍に、後述する係止部材の取り付け位置を安定させる低段部が形成されたものが好ましい。

【００３２】ここに述べる低段部は、例えば、前記本体前端縁に沿って、係止部材を嵌め付ける場合において、深く嵌まり過ぎないし、係止部材の下部と本体の下面部分とを略面一に揃えることができるため、本体を地面や床面に沿って接地させて、箒によるごみの掃き入れをし易くすることができるのである。

【００３３】また、例えば、前記本体における前端縁に沿って、ごみ袋の開口部を、輪ゴム、紐、締結用バンド等の係止部材を巻き付けて係止させる場合にあっては、これらが抜け外れたり、位置ずれが生じることを防止できるのである。

【００３４】即ち、本体における前端縁に沿って、これらの係止部材が丁度嵌まる低段部を形成することにより、取り扱い性が向上し、しかも、係止部材の抜け外れや位置ずれを防ぐことができるようになるのである。

【００３５】本発明において、本体に用いられる材質としては、特に限定されるものではないが、具体的には例えば、鉄、ステンレス、ニッケル、クロム、アルミニウム、ブリキ、銅等の金属若しくは合金、ポリプロピレン、ＡＢＳ樹脂、ポリ塩化ビニル、ポリアセタール、ポリカーボネイト、合成ゴムや天然ゴム、エラストマ等のうちのいずれかの高分子材料、各種セラミックス等のうちのいずれか１種以上で形成されたものを挙げることができるのであり、前記の金属又は合金製のもの、特に、腐食性の金属については、防錆加工又は塗装が施されたものを用いることが一層好ましい。

【００３６】そして、本発明の袋口保持具は、このような構成の下板部を備えてなる本体と、ごみ袋の開口周縁部の少なくとも一部を前記本体に保持するための係止部材からなるものであるが、この係止部材としては、ごみ袋の開口周縁部を本体に留め置くことができるものであれば特に制限されるものではなく、例えば、下板部の適所に固定したフック、クリップ等にごみ回収袋の開口周縁部を挟んで係止するようにしても良いのである。

【００３７】しかしながら、本発明においては、本体と係止部材が着脱自在であるものが好ましく、具体的には例えば、前記本体の前方からその前端近傍に沿わせて着脱自在に挟み付けることができる係止部材を用いて、前記ごみ回収袋の開口部の一部ないし全部をこの本体に挟み付けることができるものを挙げることができる。

【００３８】このようにして、ごみ回収袋の開口部を、係止部材を用いて本体の前方に挟んで係止させると、この開口部近傍部分は本体の前方にしっかりと固定される。しかも、本体からごみ回収袋を外すときには、この係止部材を本体から抜き外すだけという簡単な操作で行なえる。

【００３９】なお、この係止部材が、不用意に本体から抜け外れることがないように、係止部材材と本体との間に、ごみ回収袋の開口部を挟んで固定している。このため、係止部材は手で引き抜かない限り、外れ落ちることはない。なお、この係止部材が本体に奥深く嵌まり過ぎないようにするために、本体に突起を設けると尚良い。

【００４０】又、その他の係止部材としては、前記本体の前方からその前端周縁部に着脱自在な状態で嵌め付けて、前記ごみ回収袋の開口部を本体に挟み付けることができる凹溝が形成された係止部材を挙げることができる。

【００４１】この係止部材の凹溝をどのようにして形成しているかについては、例えば、この係止部材が金属製のものであれば、プレス成形したものが挙げられる。また、係止部材の形成材料として樹脂やゴム系の材料を用いたものであれば、射出成形、真空成形、圧空成形などにより、凹溝が形成されたものを挙げることができる。

【００４２】このような係止部材の凹溝に前記本体の前端部を嵌め込むことによって、係止部材は本体前端部に着脱自在に装着できるのであり、この装着の際に、上述したようにごみ回収袋の開口部を、凹溝と本体前端縁の間に挟むようにしたものである。

【００４３】このようにしてごみ回収袋の開口部を本体に係止させると、肉厚の係止部材に形成しても、この係止部材の下端部を傾斜形状にするだけで、地面又は床面との段差によるごみの掃き入れ難さを解消することができる。また、ごみ回収袋の開口部を挟んで係止できるため、挟んだ部分の抜け外れなどは殆ど生じない。

【００４４】更に他の係止部材としては、前記ごみ回収袋の開口部を挟んで前記本体の前端部の適所に着脱自在な状態で嵌め付けるための凹溝が後端に形成されたクリップを挙げることができる。

【００４５】ここに用いるクリップのうち、前記本体における下板部に係止させるクリップについては、ごみ回収袋の袋口が地面や床面から浮いてごみを掃き入れることができなくならないように、横方向に長く基部側の先端部分から後端に向かうに従って次第に高くなるようにした傾斜形状のものを用いることが望ましい。なお、前記本体における下板部以外を係止するクリップについては、幅方向に短い形状のものを用いても良い。

【００４６】これらクリップについては、クリップ自身の素材による弾性力によって係止できるものが用いられる。

【００４７】又、その他の係止部材としては、前記ごみ回収袋の開口部を前記本体の前端部に押え付ける輪ゴム、紐、締結用バンドの何れかが挙げられる。

【００４８】即ち、ごみを回収した後、ごみ回収袋の開口部の係止を、前記本体前端部に沿って設けられた、輪ゴム又は紐或いは締結用バンドで行なうものである。

【００４９】このように、輪ゴムや紐、締結用バンドを用いて、ごみ回収袋の開口部を係止させると、その係止が簡単且つ安価な方法で行なえる。しかも、ゴムの弾力や紐による縛り付ける力によって、確実にごみ袋の開口部近傍部分を係止させることができる上、その係止の解除も簡単に行なえる。

【００５０】ここに用いられる締結用バンドとしては、例えば、強い引っ張り力を有するゴムテープの両端にフック等の留金が設けられて、双方の留金を連結させることができるものが望ましい。

【００５１】なお、前記種々の係止部材を用いて、本体にごみ袋の開口部を係止する場合においては、本体がごみ袋の外側に位置するように係止する場合と、本体がごみ袋の中側に位置するように係止する場合とが考えられるが、本発明においては何れを選択するかは、使用者の任意である。

【００５２】本発明において、本体が枠状体の場合、係止部材はこれに嵌まる枠状体やコ字状体が用いても良いが、この係止部材に用いられる材質としては、特に限定されるものではないが、具体的には例えば、鉄、ニッケル、クロム、ステンレス、アルミ、ブリキ、銅等の金属若しくは合金、ポリプロピレン、ＡＢＳ樹脂、ポリ塩化ビニル、ポリアセタール、ポリカーボネイト、合成ゴムや天然ゴム等の高分子材料、各種セラミックス等を挙げることができるのであり、前記金属又は合金製のもの、特に鉄などの腐食性の金属については、防錆加工又は塗装が施されたものを用いることが一層好ましい。

【００５３】本発明の袋口保持具は、本体と、ごみ袋の開口周縁部の少なくとも一部を保持するための係止部材からなるものであるが、取り扱い性を向上させるために、更に本体に柄を取り付けることが好ましい。

【００５４】この本体に取り付ける柄の長さとしては、使用目的に応じて適宜決定すればよく得に制限されるものではないが、一般的には人が立った自然な姿勢、或いは少し前屈みになった姿勢で、柄の上端を手で持つことができる長さが好ましく、具体的には、本体の高さを含めた柄の長さとして、５０〜１２０ｃｍのものを好適な長さとして挙げることができる。

【００５５】又、本発明において、この柄については、数本のパイプ状材等を用いて伸縮自在なものにすることも好ましい態様となる。

【００５６】更に、この柄の形状としては、特に限定されるものではないが、本体を安定した姿勢で支持できる取り付け構造を有するものが望ましい。具体的には、柄の下端部を本体の上板部分の中央に固定させた取り付け構造のもの、柄の下部を左右に分岐させて、この分岐させた各下端部分を本体の左右の側壁に固定させた構造のものを挙げることができる。この他、後述するが、柄を前方に回動して倒れる構造のものでも良いのである。

【００５７】また、この柄の上端に、手で持ち易いように左右方向に向けたグリップを装着させたもの、柄の上端を後方に折曲させて、この折曲させた部分にグリップを装着させたものなどに形成することによって、手で持って取り扱い易くすることが望ましい。

【００５８】本発明においては、この柄を更に設けることにより、ごみ回収袋の開口部の一部を地面又は床面に接地させるように柄を手で持つと、塵取りのように使用できる。つまり、この柄を片手に持って、もう一方の片手で箒を持ち、ごみ回収袋内にごみを掃き入れるという、基本的な使い方ができるようになる。

【００５９】また、本発明においては箒を用いない使用方法も可能である。例えば、生け垣を剪定した後に、この生け垣に引っ掛かっている短い枝葉を回収するときに、本発明の保持具で保持したごみ回収袋の開口部をこの生け垣の側壁に沿わせて、その上方の生け垣や庭木等に引っ掛かっている枝葉を払い落とすと、多くの枝葉を一度にこのごみ回収袋に投入することができる。

【００６０】また、木枝や葉に付いた毛虫を、木や枝を揺すったり棒で払い落とすときに、本発明の保持具の柄の先端を手で持ったまま袋口で受けるようにすると、子供や女性でも恐がることなく毛虫を捕獲することができる。

【００６１】また、大量に落葉が積み重なっているときには、ごみ回収袋の開口部を前下方に押して、シャベルのように直接落葉をすくい取ったりすることもできる。

【００６２】そして、本発明においては、本発明の保持具から係止部材を取り外すだけで、ごみ回収袋の開口部を保持具から外すことができるのであり、このため、ごみ回収袋内がごみでいっぱいになったときには、この開口部を結んだり、輪ゴム、紐や粘着テープを用いて閉じることによって、そのまま袋ごと、ごみ回収に出すことができる。

【００６３】また、落葉や剪定して切り落とした枝葉を、大きなごみ回収袋に詰めることによって、大量に、しかも、こぼすことなく、また風で吹き飛ばされることなく、トラックやリヤカーなどで目的地まで運ぶことができるようになる。

【００６４】ところで、本発明においては、ごみ袋に収めたごみが、持ち運びの際にこぼれたりすることを防止するために、ごみ袋の開口部を略覆蓋することができる蓋部を、本体に設けることが好ましい。

【００６５】なお、この蓋部は、ごみを掃き入れ等する際においては開いた状態で、ごみ袋に収めたごみを持ち運びする際にあっては閉じた状態になるように構成する必要がある。

【００６６】このような構成としては、例えば、前記本体前端縁部に、蓋を枢着し、更に、この蓋の開閉動作を前記柄の前後に向けた操作及び、この柄を手で持って本体を持ち上げることにより、この本体の向きの変化と連動させて行なえるように構成させたもの等を挙げることができる。

【００６７】このように構成すると、蓋の開閉が掃除の有無に対応させてしかも自動的に行われるので便利であり、保持具を持ち上げて移動したり保管するときには蓋が閉じているので、見栄えも良く、衛生的である。しかも、不用意に塵取りを倒したり、倒れるようにことがあっても、中のごみ等が外部に散乱するようなこともない。

【００６８】

【発明の実施の形態】以下、本発明に係るごみ回収袋の袋口保持具の具体的な構成を添付の図面に示す実施の形態に沿って説明する。なお、以下の各実施形態に対応した各図において、共通する個所には同一符号を付して重複する説明は省略することにする。

【００６９】先ず、本発明の第１実施形態におけるごみ回収袋の袋口保持具（以下、第１実施形態の保持具、又は保持具と略称する。）１Ａについて説明する。

【００７０】図１において（ａ）図は第１実施形態の保持具を斜め前方から見た斜視図、同（ｂ）図は同じくその要部を後方から見た斜視図、図２において（ａ）図は同じく側面図、同（ｂ）図は同じく正面図で示している。

【００７１】これら各図に示すように、第１実施形態の保持具１Ａは、前部と後部を開口させた枠状体の本体２と、その上板部２ａ中央部に垂設された柄３と、係止部材４とで構成されている。

【００７２】この本体２は、上板部２ａと下板部２ｄと左右の側板部２ｃ，２ｂとを有し、その下板部２ｄの前端縁部が前方に突出し、これに対応して、左右の側板部２ｃ，２ｂの前端縁部が上端から下端に向かうに従って前方に突出、傾斜した形状を有し、この本体２の前端部の開口５を形成している。

【００７３】そして、前記本体２における前端周縁に沿った部分２ｅは板厚１枚程度の低段に形成されており、この低段部２ｅの外周面に沿って、枠形状を有する係止部材４がほぼ丁度嵌まるように構成されている。

【００７４】なお、この本体２の低段部２ｅの下面部分は、前端に向かうに従って若干、下方に傾斜しており、このようにすることによって、この本体２を地面や床面に置いたときの姿勢において、この前端が地面又は床面に確実に接地するように構成している。

【００７５】そして、この本体２の上板部分上面の略中央個所には、長柄である柄３の下端部が固着されており、この柄３の上端部は後方に折曲されて、この折曲された部分にグリップ７が取り付けられており、作業者はこのグリップ７を把持して、本体２の向きを変えたり、保持具１Ａを持って移動させたりすることができる。

【００７６】このような構成を有する第１実施形態の保持具１Ａは、図３の（ａ）図に示すように、ごみ回収袋９の開口周縁部９ａを、本体２の後端の開口６側から前端の開口５の外側に向けて袋口１０を開口させた状態で入れるのに続いて、同（ｂ）図に示すように、この開口周縁部９ａを本体２の前端の開口５を形成している低段部２ｅの外周面に沿うように折り返し、この折り返した開口周縁部９ａを挟むようにして、図４に示すように、枠形状を有する係止部材４を前記本体２の低段部２ｅの外周面に沿わせて嵌め入れて使用する。

【００７７】図５は、このようにしてごみ回収袋９の開口周縁部９ａを開口させた状態で本体２に係止させた状態を側面断面図で示しており、このようにしてごみ回収袋９の開口周縁部９ａを本体２に係止させて、ごみ回収袋９を保持具１Ａに保持させると、ごみ回収袋９は、この係止部材４を外さない限り、後方に抜け外れるようなことはない。

【００７８】このようにして、保持具１Ａを用いてごみ回収袋９を、その袋口１０を開けた状態で保持すると、従来の塵取りのように地面や床面上のごみを図示しない箒で掃き入れることができる上、従来の塵取りと違って、そのまま大きなごみ回収袋９内に直接、しかも大量のごみを掃き入れることができるようになる。

【００７９】このようにして回収したごみで、ごみ回収袋９内が略いっぱいになったときには、本体２の前端に嵌められていた係止部材４を手で抜き外して、ごみ回収袋９の開口周縁部９ａを本体２から外した後、この開口周縁部９ａを結んだり、紐などを用いて縛って袋口１０を閉じると、そのままごみ回収袋９ごと、ごみ回収に出したり、目的地に運んだりすることができるようになる。

【００８０】続いて、本発明の第２実施形態におけるごみ回収袋の袋口保持具（以下、第２実施形態の保持具、又は保持具と略称する。）１Ｂについて説明する。

【００８１】図６は、第２実施形態の保持具１Ｂを斜め前方から見た斜視図、図７の（ａ）図はこの第２実施形態の保持具の一部を構成する係止部材を斜め後方から見た斜視図、同（ｂ）図は同じく側面断面図、図８は第２実施形態の保持具１Ｂの使用状態を側面断面図で示している。なお、この第２実施形態の保持具１Ｂは、前述した第１実施形態の保持具１Ａと共通する個所が多いことから、図５及び図８において図１ないし図５と共通する個所には同一符号を付して、重複する説明は省略した。

【００８２】図６に示すように、この第２実施形態の保

持具１Ｂの本体２は、前述した第１実施形態の保持具１Ａの本体２と略同様の形状を有するが、第１実施形態の本体２の前端周縁部に形成されている低段部２ｃは、この第２実施形態の本体２には形成されておらず、上板部２ａ，下板部２ｄ、左右側板部２ｃ，２ｂの各前端部がそのまま開口５の周縁部２ｆを形成している。

【００８３】この第２実施形態の保持具１Ｂにおいて用いられている係止部材４１には、図５ないし図７に示すように、前記開口５を形成している本体２前端の周縁部２ｆに沿った傾斜枠形状を有し、その後端には、この周縁部２ｆに嵌まる大きさの枠形状の凹溝４１ａが深く形成されている。

【００８４】図８に示すように、この第２実施形態の保持具１Ｂにごみ回収袋９の開口周縁部９ａを開口させた状態で係止させるには、第１実施例の保持具１Ａの場合と同様に、ごみ回収袋９の開口周縁部９ａを、本体２の後端の開口６側から前端の開口５の外側に向けて袋口１０を開口させた状態で入れるのに続いて、この開口周縁部９ａを本体２の前端における開口５を形成している周縁部２ｆの外周面に沿うように折り返し、この折り返した開口周縁部９ａを挟むようにして、係止部材４１の凹溝４１ａを本体２前端の周縁部２ｆに押し込んで嵌め付けることにより、この係止部材４１をこの周縁部２ｆに係止させる。

【００８５】このように構成すると、この保持具１Ｂを用いてごみ回収袋９を、その袋口１０を開けた状態で保持すると、従来の塵取りのように地面や床面上のごみを図示しない箒で掃き入れることができるのであり、しかも、そのまま大きなごみ回収袋９内に直接、しかも大量のごみを掃き入れることができる。

【００８６】続いて、本発明の第３実施形態におけるごみ回収袋の袋口保持具（以下、第３実施形態の保持具、又は保持具と略称する。）１Ｃについて説明する。

【００８７】図９は、ごみ回収袋を保持した第３実施形態の保持具１Ｃを斜め前方から見た斜視図、図１０の（ａ）図は同じく接地状態にある側面図、同（ｂ）図は同じく正面図、図１１の（ａ）図は、柄と蓋の支持構造を拡大して示す部分側面図、同（ｂ）図は、同じく片側部分の断面図、図１２の（ａ）図は同じくそれを持ち上げた状態を示す側面図、同（ｂ）図は同じく正面図を示している。

【００８８】この第３実施形態の保持具１Ｃは、前述した第１実施形態の保持具１Ａに、開閉を自動的に行なう蓋１０を取り付けたものである。このため、第１実施形態の保持具１Ａの各部と共通する個所には、同一符号を付して重複する説明は省略する。

【００８９】図９ないし図１１の各図に示すように、この第３実施例の保持具１Ｃにおける柄３の下端部は、正面視、略上下逆Ｕ形状を有する金属製の細幅形状を有する支持部材１１の上面中央に、溶接等により固着されており、この支持部材１１の左右の下端部は、本体２の左右の側板部２ｃ，２ｂにそれぞれピン１４，１４を介して、この支持部材１１が前後に回動するように枢着されている。

【００９０】そして、本体２の上板部２ａにおける前部開口５近傍の左右端には、ピン受け１２，１２が溶接又はリベット止め等によって固着されており、このピン受け１２，１２に、前記蓋１０の左右端を立ち上げて形成した側板部１０ａ，１０ａの後端の突出部１０ｂ，１０ｂが、ピン１３，１３を介して枢着されており、このような支持構造にすることによって、前記本体２前端の開口５を蓋１０で開閉させることができるように構成されている。

【００９１】そして、前支持部材１１の左右側壁部における略中央部に、上下に沿って形成された長孔１１ｃ，１１ｃ内に、前記側板部１０ａ，１０ａから突出させたピン１３，１３を突入させて、この長孔１１ｃ，１１ｃから突出したピン１３，１３の先端部分を、ワッシャ２５，２５を介してＣリング１５で係止めして、ピン１３，１３がこの長孔１１ｃ，１１ｃから抜け外れないように構成されている。

【００９２】そしてさらに、前記支持部材１１と前記蓋１０の側板部１０ａ，１０ａとの間に間隔を設けるために、前記ピン１３，１３の途中部分に、短筒形状のスペーサ１６，１６を挿通支持させてあり、同様に、前記支持部材１１と前記本体２の左右側板部２ｃ，２ｄとの間に間隔を設けるために、前記ピン１４，１４の途中部分に、短筒形状のスペーサ１７，１７を挿通支持させている。

【００９３】このようにして、柄３を固着した支持部材１１と蓋１０とが本体２に組み付けられていると、支持部材９と一体となった柄５は、前後方向に回動自在になる。

【００９４】このように構成して、図９及び図１０の各図に示すように、長柄５を直立させて本体２を地面又は床面に置いたときに、前記ピン１３，１３が前記長孔１１ｃ，１１ｃ内の上端に位置させて、蓋１０を大きく上後方に開くようにし、更に、図１２の（ａ）図に示すように、蓋１０が閉じたときにこのピン１３，１３が前記長孔１１ｃ，１１ｃの下端部まで移動するようにすれば、柄３を持って保持具１Ｃ全体を持ち上げると、この本体２はごみ回収袋９や自身の重量バランスによって、本体２前端の開口５が上方に向く方向に回転し、この動きに連れて、蓋１０も同時に閉じる。

【００９５】また、図１０の各図に示すように、本体２前端の開口５が前方に向くように接地させて柄３を上方に向けた姿勢にすると、この動きに連れて、蓋１０は大きく開く。

【００９６】このような構成を有する第３実施形態の保持具１Ｃにおける、ごみ回収袋９の保持・使用方法は、

図１３及び図１４に示すように、第１実施形態の保持具１Ａの場合と同様であるので、その説明は省略する。

【００９７】なお、図示してないが、本体２の重心による回動とその姿勢を安定させるために、本体２の後端部を重く、前記支持部材１１の枢着個所を考慮するなどすることが望ましい。

【００９８】更に、本発明の第４実施形態におけるごみ回収袋の袋口保持具（以下、第４実施形態の保持具、又は保持具と略称する。）１Ｄについて説明する。

【００９９】図１５は、ごみ回収袋を保持した第４実施形態の保持具１Ｄを斜め前方から見た斜視図、図１６は同じくごみ回収袋９を保持した状態を示す要部斜視図、図１７は同じく側面断面図である。なお、この第４実施形態の保持具１Ｄは、上述した第３実施形態と同様に蓋１０が開閉するように構成されており、このため、この蓋１０の開閉構造の説明については、図９ないし図１５の各図と同一符号を付すことによって、重複する説明は省略することにする。

【０１００】この第４実施形態の保持具１Ｄは、ごみ回収袋９の開口部９ａの係止構造に特徴がある。つまり、図１５に示すように、本体２前面の開口３を形成している周縁ぶ２ｆの近傍の外周面には、輪ゴム３０を広げ伸ばした状態で当該周縁部２ｆから嵌め入れて係止させるための１条の溝からなる凹部２ｇが形成されたものである。

【０１０１】そして、前述した各実施形態の場合と同様の手法を以って、ごみ回収袋９の折り返した開口周縁部９ａを開口させた状態で、本体２の開口５近傍の外周面に沿うように折り返し、この折り返した部分を挟むようにして、図１６及び図１７に示すように、輪ゴム３０を本体２の前記凹部２ｇ内に係止させて、この輪ゴム３０の引っ張り力によって、ごみ回収袋９の袋口近傍個所９ａを本体２に係止させる。

【０１０２】このように構成すると、輪ゴム３０は、前記凹部９の位置がずれたり抜け外れたりしないので、本体２前端の開口５が斜め方向に形成されている場合には、極めて有効である。

【０１０３】

【発明の効果】以上において説明した本発明に係るごみ回収袋の袋口保持具（以下、本発明の保持具と略称する。）によれば、次のような効果を奏する。その最も大きな効果は、本発明の保持具を用いて、ごみ回収袋の袋口を開口させたまま、しかも、その開口部の一部が地面又は床面に沿って接地できるように構成したことによって、地面や床面に散乱しているごみ屑や生ごみ、木屑、塵、落葉、生け垣や庭木等を剪定した後に地面に落ちて残った枝葉などを、箒を用いて塵取りのようにごみ回収袋内に掃き入れることができるようになるのである。

【０１０４】この結果、従来では、塵取りの中に掃き集めていた落葉が、風で吹き飛ばされるようなことがあったが、本発明の保持具を使用すると、落葉を直接、ごみ回収袋内に掃き入れることができるため、落葉が風で飛ばされることは全く無くなるのである。

【０１０５】しかも、本発明の保持具において、当該保持具に柄を設けた場合にあっては、取り扱い性が向上し、例えばその作業を作業者が立ったままの姿勢で、楽に行なえるなどの効果を奏するのである。

【０１０６】更には、本発明の保持具においては、大きなごみ回収袋の袋口近傍部分を開口させた状態で係止させると、一度に多くのごみを持ち運ぶことができる結果、作業の手間と効率が大幅に改善できるなどの効果を奏するのである。

【０１０７】しかも、本発明の保持具においては、ごみをごみ回収袋と一緒に捨てたり、ごみ回収に出したりすることができるので、ごみを捨てるときに、手や衣服を汚すことも無くなり、極めて衛生的であるなどの効果を奏するのである。

【図面の簡単な説明】

【図１】図１において（ａ）図は、第１実施例の保持具を斜め前方から見た斜視図である。図１において（ｂ）図は、同じくその要部を後方から見た斜視図である。

【図２】図２において（ａ）図は、第１実施例の保持具を示す側面図である。図２において（ｂ）図は、同じくその正面図である。

【図３】図３において（ａ）図は、第１実施例の保持具にごみ回収袋を保持させる手順の途中過程を示す斜視図である。図３において（ｂ）図は、第１実施例の保持具にごみ回収袋を保持させる手順の次の途中過程を示す斜視図である。

【図４】図４は、第１実施例の保持具にごみ回収袋を保持させた状態を示す斜視図である。

【図５】図５は、同じくその要部を示す側面断面図である。

【図６】図６は、第２実施例の保持具を斜め前方から見た斜視図である。

【図７】図７において（ａ）図は、第２実施例の保持具の一部を構成する係止部材を斜め後方から見た斜視図である。図７において（ｂ）図は、同じくその側面断面図である。

【図８】図８は、第２実施例の保持具の使用状態を示す側面断面図である。

【図９】図９は、ごみ回収袋を保持した第３実施例の保持具を斜め前方から見た斜視図である。

【図１０】図１０において（ａ）図は、第３実施例の保持具を接地状態で示す側面図である。図１０において（ｂ）図は、同じくその正面図である。

【図１１】図１１において（ａ）図は、同じく柄と蓋の支持構造を拡大して示す部分側面図である。図１１において（ｂ）図は、同じくその片側部分を示す要部断面図である。

【図１２】図１２において（ａ）図は、同じく保持具を持ち上げた状態の向きで示す側面図である。図１２において（ｂ）図は、同じくその正面図である。
【図１３】図１３は、第３実施例の保持具にごみ回収袋を保持させる手順の途中過程を示す斜視図である。
【図１４】図１４は、ごみ回収袋を保持させる手順の、次の途中過程を示す斜視図である。
【図１５】図１５は、ごみ回収袋を保持した第４実施例の保持具を斜め前方から見た斜視図である。
【図１６】図１６は、同じくごみ回収袋を保持した状態を示す要部斜視図である。
【図１７】図１７は、同じくその側面断面図である。

【符号の説明】

１Ａ〜１Ｄ	本発明に係るごみ回収袋の袋口保持
２	本体
３	柄
４	係止部材
５	開口
７	グリップ
９	ごみ回収袋
９ａ	開口周縁部
１０	袋口
３０	輪ゴム
４１	係止部材

【図１】

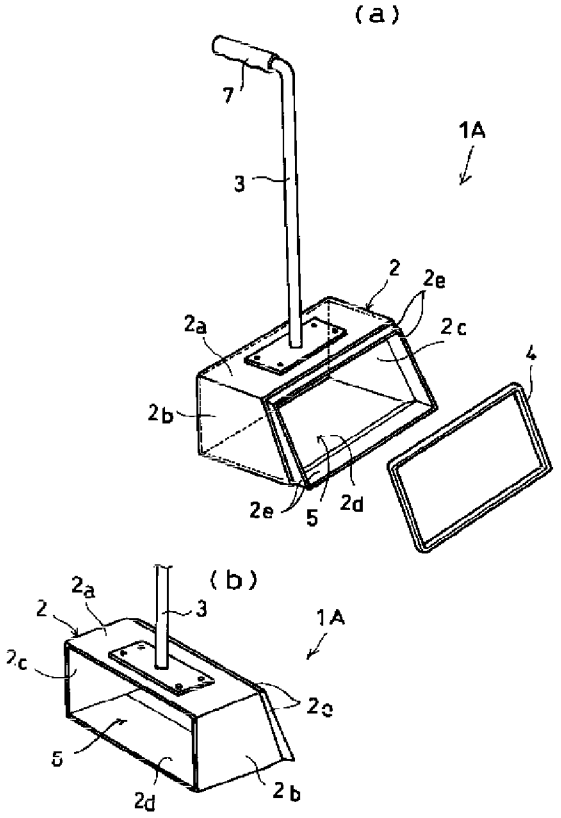

【図２】

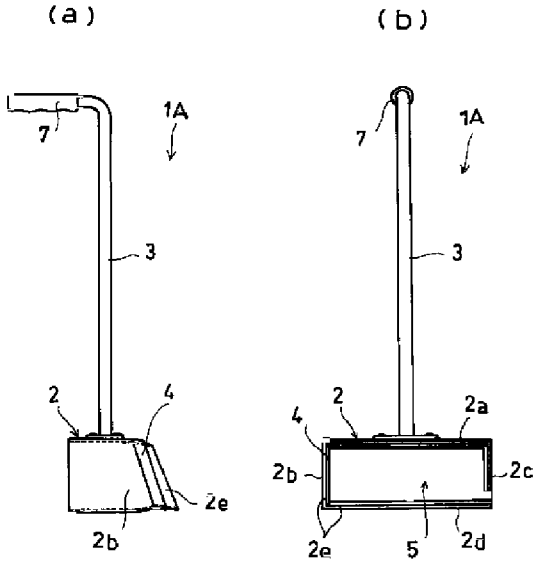

【図４】

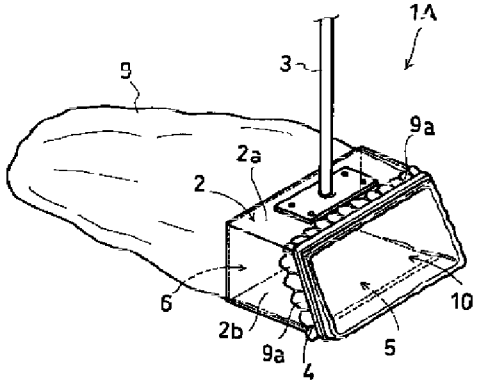

【図3】

(a)

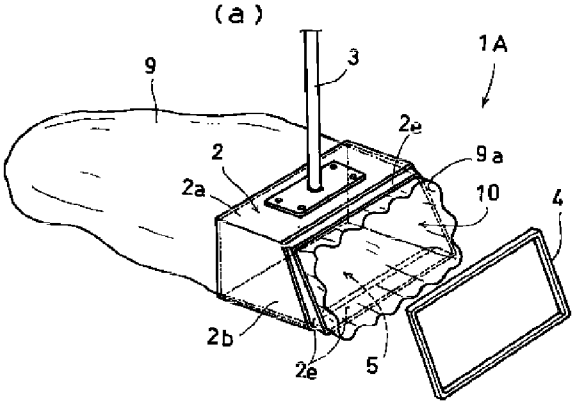

(b)

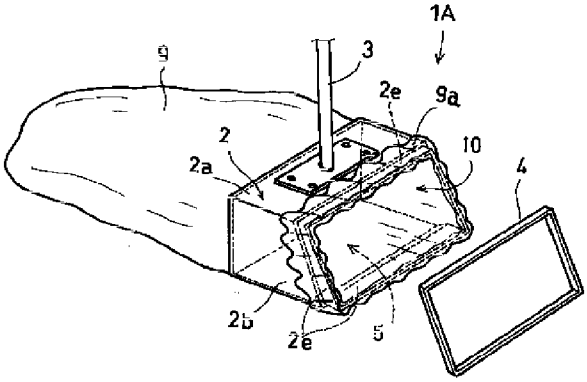

【図5】

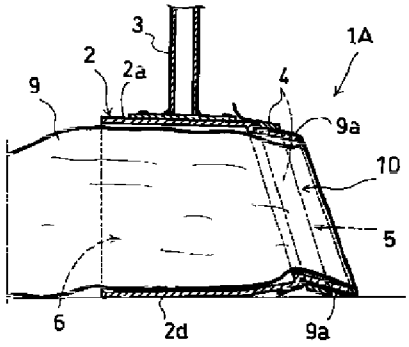

【図8】

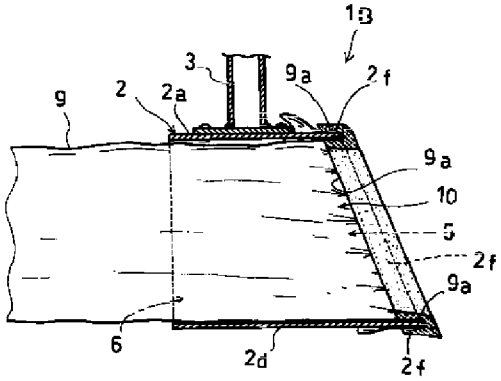

【図6】

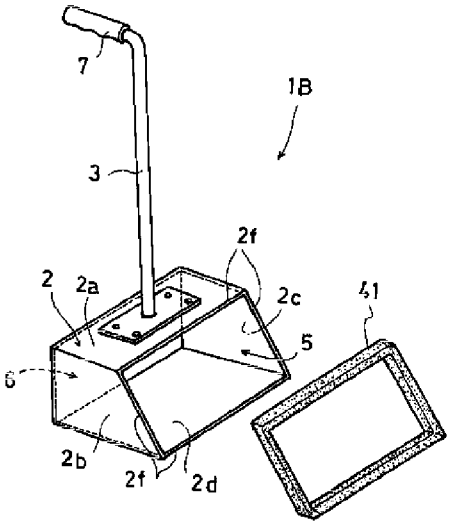

【図7】

(a)

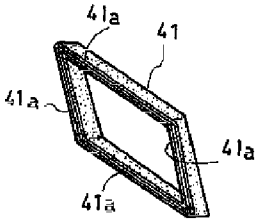

(b)

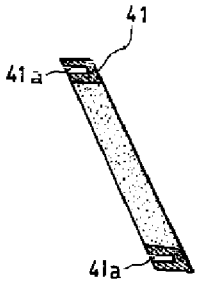

【図9】

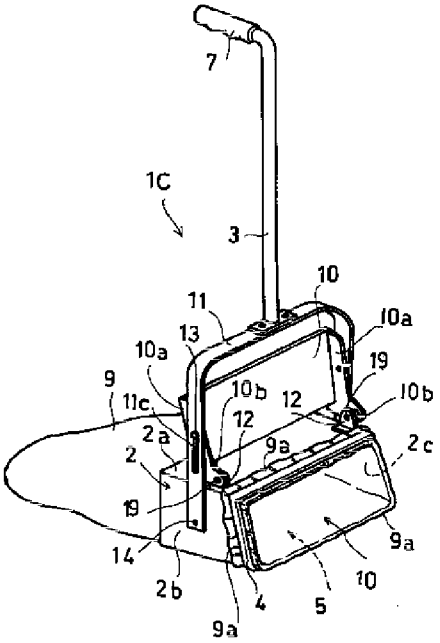

【図10】

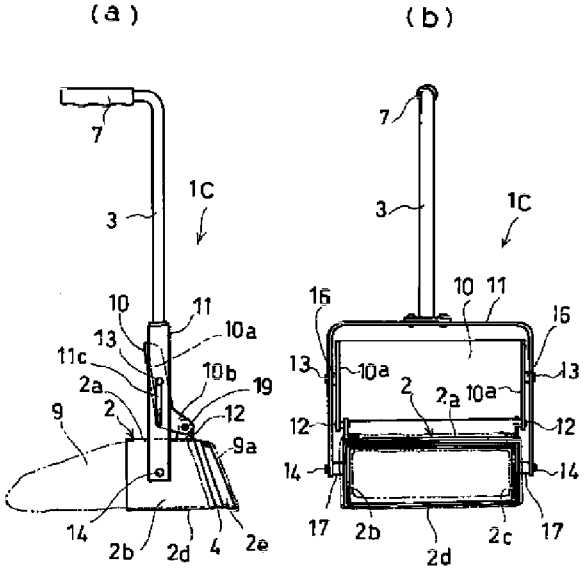

【図11】

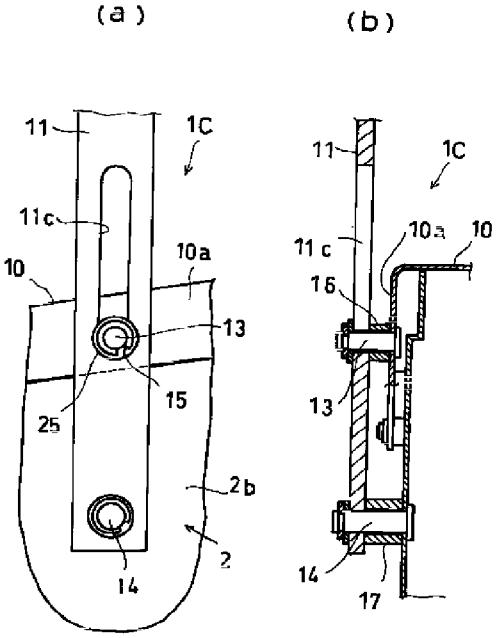

【図12】

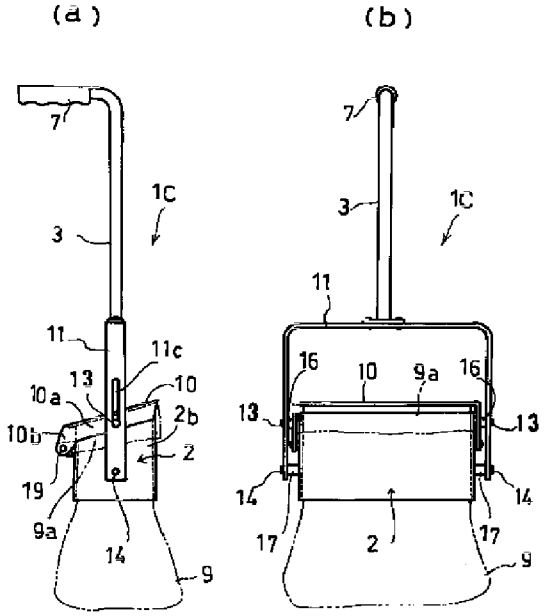

【図13】

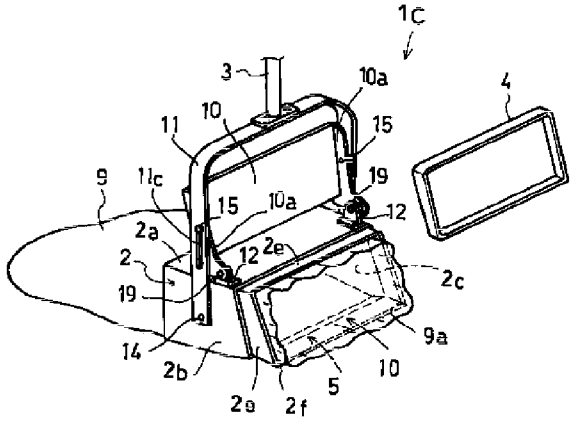

【図14】

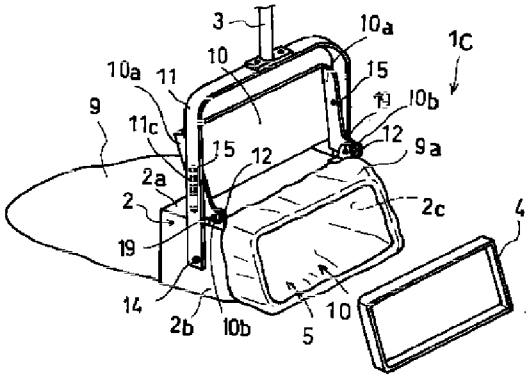

【図15】

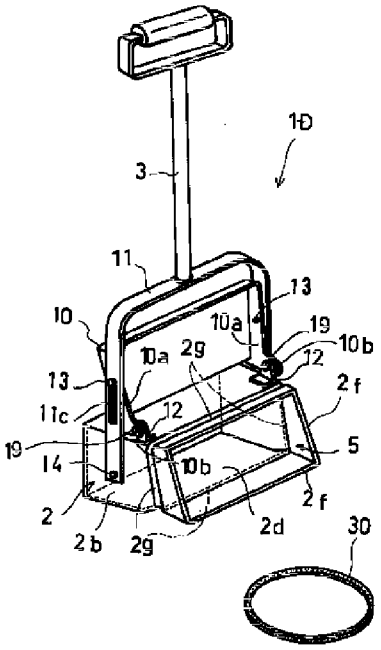

【図16】

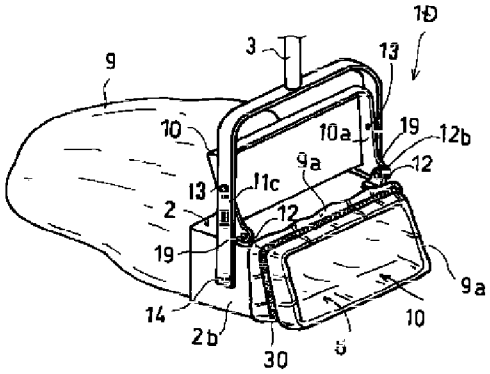

【図17】

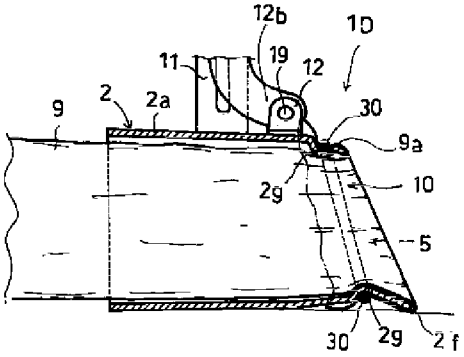

PATENT ABSTRACTS OF JAPAN

(11)Publication number : 2003-237904
(43)Date of publication of application : 27.08.2003

(51)Int.Cl. B65F 1/14
A47L 13/52
B65B 67/12
E01H 1/12

(21)Application number : 2002-033451
(22)Date of filing : 12.02.2002

(71)Applicant : UENO MAMORU
(72)Inventor : UENO MAMORU

(54) REFUSE COLLECTION BAG MOUTH HOLDER

(57)Abstract:
PROBLEM TO BE SOLVED: To provide a refuse collection bag mouth holder in which disposable shopping bags provided in supermarkets or the like, large bags used for packaging and accommodating commodities, and exclusive bags of each store in addition to vinyl bags and refuse bags on the market are used for refuse collection bags, one end of an opening peripheral edge part in each refuse collection bag is set along and substantially parallel to the ground or a floor surface, and refuse, garbage, wooden dust, dust, falling leaves, leaves and branches dropped on the ground after trimming a hedge and garden plants which are scattered on the ground and floor surfaces are directly swept into the refuse collection bag by using a broom.

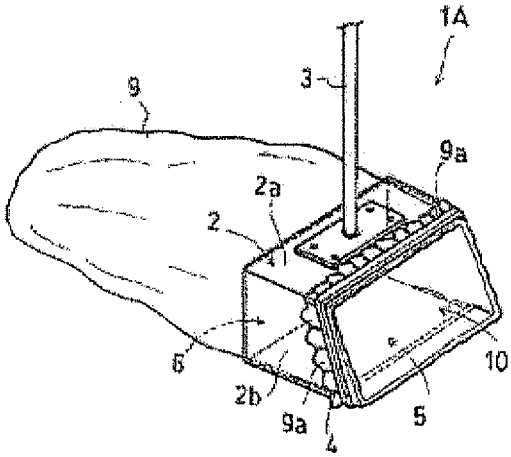

SOLUTION: The bag mouth holder comprises a body and a locking member which holds at least a part of the opening peripheral edge part of the refuse bag and locks the refuse bag to the body in an open condition. The body has a lower plate part having a leading edge along the ground or the floor surface, at least a part of the opening peripheral edge part of the refuse bag is locked by the locking member so as to be along the lower plate part and the refuse bag together with the bag mouth holder is used as a dustpan.

* NOTICES *

JPO and INPIT are not responsible for any
damages caused by the use of this translation.

1.This document has been translated by computer. So the translation may not reflect the original precisely.
2.**** shows the word which can not be translated.
3.In the drawings, any words are not translated.

CLAIMS

[Claim(s)]
[Claim 1]Are a bag mouth holding fixture characterized by comprising the following, and said main part, A bag mouth holding fixture having an inferior lamella part which has a front end edge which meets to a ground surface or a floor line, stopping at least a part of opening peripheral edge part of said garbage bag by said locking member so that said inferior lamella part may be met, and being able to use it like a dustpan.
A main part.
A locking member for making it stop, where it held at least a part of opening peripheral edge part of a garbage bag on this main part and the opening of the garbage bag concerned is carried out to it.

[Claim 2]The bag mouth holding fixture according to claim 1 which is a frame-like object provided with an inferior lamella part which has a front end edge which a main part meets to a ground surface or a floor line.
[Claim 3]The bag mouth holding fixture according to claim 1 or 2 with which a handle is provided in a main part.
[Claim 4]A bag mouth holding fixture given in any 1 clause of Claims 1-3 by which a covering device which can abbreviated-cover an opening of a garbage bag is provided in a main part.

[Translation done.]

* NOTICES *

JPO and INPIT are not responsible for any
damages caused by the use of this translation.

1.This document has been translated by computer. So the translation may not reflect the original precisely.
2.**** shows the word which can not be translated.
3.In the drawings, any words are not translated.

DETAILED DESCRIPTION

[Detailed Description of the Invention]
[0001]
[Field of the Invention]This invention relates to the bag mouth holding fixture which can sweep directly the branches and leaves etc. which fell and remained in the ground surface after pruning garbage waste, a kitchen garbage and saw dust, dust, fallen leaves, hedges, garden trees scattered on a ground surface, a floor line, etc., etc. in a garbage bag using a broom etc.
[0002]
[Description of the Prior Art]When tidying up what becomes garbage, such as branches and leaves which fell and remained in the ground surface, after pruning garbage waste, a kitchen garbage and saw dust, dust, fallen leaves, hedges, garden trees scattered on a ground surface or a floor line, etc., in the former. the garbage which moved the garbage in a dustpan to the garbage can or the garbage bag, or was put into the dustpan after sweeping these with a broom, collecting them and sweeping on a dustpan -- the nearby space destroying by fire -- it threw away, it carried to the place, and was refunding, thru/or throwing away and making.
[0003]
[Problem to be solved by the invention]However, when garbage is swept on a dustpan in this way, and it was made to put in in a garbage can or a garbage bag, and fallen leaves are swept and collected on a windy day and it puts into a dustpan, When moving the fallen leaves in a dustpan in a garbage can or a garbage bag, and fallen leaves etc. are blown away by a wind, and may disperse and it became such, it had to sweep, and it became useless, and it had to return to lost labor and it had to collect [cleaning had to sweep scattered fallen leaves again, had to collect them, and] them.
[0004]Since it became obstructive when it had a garbage bag by hand when sweeping, collecting and collecting fallen leaves with a broom and a dustpan, a garbage bag will be put on a ground surface, but the fallen leaves in a garbage bag or a garbage bag, etc. might be flown by the wind at this time.
[0005]When late autumn comes, under a park and a street tree with many trees, When fallen leaves have spread and fallen on the whole surface and it was going to collect a lot of [in this way] fallen leaves using the broom and the dustpan, work time-consuming [of the inside of a dustpan filling with fallen leaves immediately, and moving the fallen leaves in a dustpan in a garbage can or a garbage bag repeatedly] was required.
[0006]Such SUBJECT occurred, when collecting a lot of branches and leaves which fell and remained in the ground surface after pruning of a big hedge, a garden tree, etc., and also when collecting much garbage.
[0007]As a result of repeating examination wholeheartedly as the dustpan with which this invention person cancels above-mentioned SUBJECT is not made, it came to invent the bag mouth holding fixture of the new comfort recovery bag applied to this invention at last.
[0008]This invention which came to be completed through such the circumstances, The grocery sack of throwing away provided in a supermarket besides a commercial plastic bag or a garbage bag

etc., Garbage bags, such as a large-sized bag used for a package and storage of goods and an exclusive bag of each store, are used as a garbage recovery bag, The end of the opening in this garbage bag is made to meet almost in parallel to a ground surface or a floor line, It aims at providing the bag mouth holding fixture which makes it possible to sweep the branches and leaves etc. which fell and remained in the ground surface after pruning garbage waste, a kitchen garbage and saw dust, dust, fallen leaves, hedges, garden trees scattered on a ground surface or a floor line, etc. in garbage bags, such as a direct garbage recovery bag, using a broom.
[0009]
[Means for solving problem]The bag mouth holding fixture of this invention proposed as the above The means for solving a technical problem, The grocery sack of throwing away with which a main part and this main part are provided in a supermarket besides a commercial plastic bag or a garbage bag etc., for example, It is a bag mouth holding fixture which consists of locking members in order to make it stop where it held at least a part of opening peripheral edge part of garbage bags, such as a large-sized bag used for a package and storage of goods, and an exclusive bag of each store, and the opening of the garbage bag concerned is carried out, Said main part is provided with the inferior lamella part which has a front end edge which meets to a ground surface or a floor line, it stops at least a part of opening peripheral edge part of said garbage bag by said locking member so that said inferior lamella part may be met, and it can be used for it like a dustpan.
[0010]That is, the bag mouth holding fixture concerning this invention makes the end of the opening in garbage bags, such as a garbage recovery bag, meet almost in parallel to a ground surface or a floor line, and enables it to sweep garbage with a broom.
[0011]As mentioned above, the garbage recovery bag used in this invention, Various garbage bags, such as a grocery sack of throwing away provided in a supermarket besides not the thing limited especially but a commercial plastic bag or a garbage bag etc., a large-sized bag used for a package and storage of goods, and an exclusive bag of each store, can be used conveniently.
[0012]A commercial plastic bag and a garbage bag are a bag of a rectangle made with a film made of resin, and the size can apply anything of a size to a bag mouth holding fixture of this invention, for example, although various kinds of things, such as a thing for 45 l. and a thing for 70 l., are marketed.

[0013]A grocery sack of throwing away provided in a supermarket etc., Generally it is formed with a film made from high density polyethylene, and are rich in a water resisting property, It is strong, and since it is brought back to each home by degree of shopping and becomes unnecessary after that in many cases, this bag has a thing of various kinds [size / of those / it is satisfactorily recoverable and also / stools, such as dog and cat which were obtained easily and made not only into wet garbage waste etc. but into a kitchen garbage, and on the street and a yard, or], but. Although a grocery sack applied to a holding fixture of this invention is not necessarily limited, as a result of being able to accommodate many garbage which is lightweight and is bulky, such as fallen leaves, it makes suitable what has large capacity as much as possible.
[0014]Into a large-sized bag used for a package and storage of goods. For example, since it is wrapped with a transparent bag made from vinyl in a carton box and this big bag made from vinyl becomes unnecessary after these purchase when consumers purchase, this bag is used for products, such as large-sized television and a desktop PC, as a bag for garbage recovery. In addition, a rice bag made from vinyl which makes rice 5-kg stuffing and 10-kg stuffing, and is marketing it is also the target of application.
[0015]In addition, with an exclusive bag of each store, a bag etc. which were made with bags, these raw materials, strong textile fabrics, or a nonwoven fabric of throwing away of a paper bag, water resistance or a waterproofed paper bag, a bag made with a film made of a synthetic resin, etc. and which can carry out repetition use are mentioned.
[0016]And a bag mouth holding fixture of this invention stops at least a part of opening peripheral edge part of said garbage bag using a suspending portion later mentioned so that a parallel inferior

lamella part which is, carries out and has a front end edge almost in parallel may be met to a ground surface or a floor line, and carries out it as [sweep / garbage / with a broom] like a dustpan.
[0017]About form of an inferior lamella part with which this main part was equipped. If it has a parallel front end edge which is, carries out and becomes almost parallel to a ground surface or a floor line, it will not be what is limited especially, What is necessary is just to determine suitably according to the purpose of use etc., also about the size and width, people can have by hand and it can carry, and it will not be limited especially if it is a size of a grade and a thing of width which sweep garbage efficiently using a broom.
[0018]Although a "front end edge" means an edge part ahead of an inferior lamella part, here, For example, in [since garbage will be caught in an edge of a main part if space is made between a ground surface etc. and the inferior lamella part front when wearing garbage in a ground surface or a floor line to a garbage bag] this invention, It constitutes so that the Taira deed may be carried out to a ground surface or a floor line about this portion (front end edge) and it may become almost parallel, and garbage needs to be made to be swept by garbage bag smoothly.
[0019]in addition -- as opposed to "ground surface or a floor line -- between not a parallel meaning with strict almost parallel" that is and carries out and that is searched for until parallel but a ground surface, etc. and the inferior lamella part front -- an excess (superfluous) -- it means that parallel which are the grades which cannot do space are obtained
[0020]In a bag mouth holding fixture of this invention, by adopting sliding structure and folding structure using two or more plates, rails, etc., or insertion structure about said inferior lamella part, It is preferred to enable it to change the width flexibly, and the width can also be arbitrarily changed according to the purpose which this uses, a size of an opening of a garbage bag, etc.
[0021]Although limited and carried out about neither a frontage of this inferior lamella part, nor order width (depth) in particular, generally what has several centimeter - about 50-cm order width is preferred.
[0022]Of course, this main part may be an extremely short thing which order [this] width (depth) calls several centimeters - 10 cm. In this case, since a main part becomes lightweight, there is an advantage of carrying and becoming easy to carry out.
[0023]In a bag mouth holding fixture of this invention, as a main part, Although it consists only of an inferior lamella part, since a user needs to raise an end of a garbage bag by hand and the thing of this composition needs to carry out the opening of the garbage bag in the case of use, it may be necessary to work with a posture over [posture] a user leaned or, and a hand may become dirty.
[0024]Then, in the bag mouth holding fixture of this invention, providing a columnar member toward the upper part from an inferior lamella part, or providing a side wall member in the end rim of one side of an inferior lamella part or both sides, starting the attached garbage bag as desirable composition of a main part, for example, and making it an opening spread is mentioned.
[0025]In the bag mouth holding fixture of this invention, what is a frame-like object provided with the inferior lamella part which has a front end edge which a main part meets to a ground surface or a floor line as desirable composition of a main part at least (the Taira deed is carried out and it becomes almost parallel) is mentioned.
[0026]That is, by using a main part as a frame-like object, a mechanical strength can improve, the garbage bag attached especially can hang down with the dignity, and the state where the opening of a garbage bag blockades can be avoided.
[0027]It is not that by which a "frame-like object" is limited only to the thing, front view square, or front view abbreviation square of a front view rectangle thru/or a front view abbreviation rectangle in this invention, Although the opening of the garbage bag further attached by also containing polygon types, such as a semicircle type, a half elliptic, Quonset or a pentagon, and a hexagon, and constituting in this way can be extended greatly, This "frame-like object" is provided with the inferior lamella part which has a front end edge which meets to a ground surface or a floor line at least (the Taira deed is carried out and it becomes almost parallel), and things are required.

[0028]what provided a columnar member as a main part in this invention and a thing which provided a side wall member in an end rim of one side of an inferior lamella part, or both sides --- or, When it is preferred to constitute so that it may fold up and a main part can be miniaturized about a columnar member, a side wall member, etc., if it is when a thing of a frame-like object is adopted and it constitutes in this way, Storage becomes simple and stops needing a big housed place in a case where portability does not improve further and a bag mouth holding fixture of this invention is not used etc.
[0029]By the way, in this invention, if it is when adopting said frame-like object as a main part, it is preferred to make a front end part of the inferior lamella part project ahead.
[0030]Since a tip of a broom is sent in in a bag mouth of a garbage recovery bag and garbage etc. can be easily swept if a front end part in an inferior lamella part of a main part is made into form which made it project ahead, it sweeps and falls, and ** becomes there is not less and the difficulty of sweeping can also be canceled. Since this bag mouth can be seen with a posture which has stood automatically for a worker when sweeping garbage in a bag mouth using a broom, it is not necessary to slouch at the time of cleaning, and garbage can be swept with an easy posture.
[0031]In this invention, that by which a low step part which stabilizes a fixing position of a locking member mentioned later was formed in a front end edge of said main part or its neighborhood is preferred.
[0032]Since a low step part described here does not fit in too much deeply and can arrange the lower part of a locking member, and an undersurface portion of a main part with abbreviated flush, for example, when inserting in a locking member along said front end edge of a main part, ON ** can be made easy to ground a main part along a ground surface or a floor line, and for garbage with a broom to sweep, and to carry out.
[0033]A position gap can be prevented from these falling out, and separating or arising, if it is for example, when twisting locking members, such as a rubber band, a string, and a band for conclusion, and stopping an opening of a garbage bag along a front end edge in said main part.
[0034]That is, when these locking members form a low step part which fits in exactly along a front end edge in a main part, handling nature can improve and, moreover, an omission blank of a locking member and a position gap can be prevented.
[0035]In this invention, as construction material used for a main part, Although not limited in particular, specifically For example, iron, stainless steel, Metal or alloys, such as nickel, chromium, aluminum, tin, and copper, Polypropylene, ABS plastics, polyvinyl chloride, polyacetal, polycarbonate, A polymer material of either a synthetic rubber, crude rubber, elastomers, etc., What was formed by any one or more sorts in various Ceramics Sub-Division etc. can be mentioned, and it is much more preferred about the aforementioned metal or a thing made from an alloy, and especially corrosive metal to use that to which antirust processing or paint was performed.
[0036]And although the bag mouth holding fixture of this invention consists of a main part provided with the inferior lamella part of such composition, and a locking member for holding at least a part of opening peripheral edge part of a garbage bag on said main part, As this locking member, especially if the opening peripheral edge part of a garbage bag can be detained on a main part, it is not restricted, and it may be made to stop across the opening peripheral edge part of a garbage recovery bag for example, to a hook, a clip, etc. which were fixed to the proper place of an inferior lamella part.
[0037]However, in this invention, what a main part and a locking member can detach and attach freely is preferred, and specifically for example, What can insert a part thru/or all of an opening of said garbage recovery bag into this main part can be mentioned using the locking member which is made to meet near [that] the front of solvent, and can be pinched from the front of said main part enabling free attachment and detachment.
[0038]Thus, when the opening of a garbage recovery bag is pinched ahead of a main part and stopped using a locking member, this opening close part is firmly fixed ahead of a main part. And

when removing a garbage recovery bag from a main part, it can carry out by easy operation in which it is only to extract and remove this locking member from a main part.
[0039]This locking member is fixed on both sides of the opening of a garbage recovery bag between locking member material and a main part so that it may escape from a main part carelessly and may not separate. For this reason, it separates and a locking member does not fall, unless it draws out by hand. In order to make it this locking member not fit into a main part too much deep, in addition, it is good for a main part to provide a projection.
[0040]As other locking members, it inserts in in the state which can be freely detached and attached from the front of said main part to the front-of-solvent peripheral edge part, and the locking member in which the concave which can insert the opening of said garbage recovery bag into a main part was formed can be mentioned.
[0041]About how the concave of this locking member is formed, if this locking member is a metal thing, what carried out press forming will be mentioned, for example. If resin and the material of a rubber system are used as a formation material of a locking member, that in which the concave was formed can be mentioned by injection moulding, vacuum forming, pressure forming, etc.
[0042]By inserting the front end part of said main part in the concave of such a locking member, the front end part of a main part can be equipped with a locking member, enabling free attachment and detachment, and as mentioned above on the occasion of this wearing, it sandwiches the opening of a garbage recovery bag between a concave and the front end edge of a main part.
[0043]Thus, if a main part is made to stop the opening of a garbage recovery bag, even if it forms in a thick locking member, only by making the lower end part of this locking member into inclination shape, the garbage by a level difference with a ground surface or a floor line can sweep, and the difficulty of putting in can be canceled. Since it can stop on both sides of the opening of a garbage recovery bag, the omission blank of the pinched portion is hardly produced.
[0044]A concave for inserting in on both sides of an opening of said garbage recovery bag as other locking members in the state which can be freely detached and attached in a proper place of a front end part of said main part can mention a clip formed in the back end.
[0045]About a clip which an inferior lamella part in said main part is made to stop among clips used here. It is desirable to use a thing of inclination shape it was made to become high gradually as it goes to the back end from a tip end part by the side of a base for a long time in a transverse direction so that a bag mouth of a garbage recovery bag may float from a ground surface or a floor line and it may not become impossible to sweep garbage. About a clip which stops except an inferior lamella part in said main part, a short-shaped thing may be used crosswise.
[0046]About these clips, what can be stopped according to elastic force by a clip's own raw material is used.
[0047]It is mentioned any of a rubber band, a string, and a band for conclusion which suppress an opening of said garbage recovery bag to a front end part of said main part they are as other locking members.
[0048]That is, after collecting garbage, a rubber band or a string for which it was prepared along said front end part of a main part, or a band for conclusion performs a stop of an opening of a garbage recovery bag.
[0049]Thus, if the opening of a garbage recovery bag is stopped using a rubber band, a string, and the band for conclusion, the stop can carry out by an easy and inexpensive method. And with the power with the elasticity and string of rubber to bind, the opening close part of a garbage bag can be stopped certainly, and also release of the stop can also be performed easily.
[0050]The thing with which clasps, such as a hook, are formed in the both ends of the elastic tape which has strong hauling power as a band for conclusion used here, for example, and both clasps can be made to connect is desirable.
[0051]When stopping the opening of a garbage bag on a main part using said various locking members, can consider the case where it stops so that a main part may be located in the outside of

a garbage bag, and the case where it stops so that a main part may be located in the inside side of a garbage bag, but. As for a user, it is arbitrary any are chosen in this invention, and it occurs.
[0052]In this invention, when a main part is a frame-like object, the frame-like object and U-character shaped body which fit into this may use a locking member, but as construction material used for this locking member, Although not limited in particular, specifically For example, iron, nickel, Metal, such as chromium, stainless steel, aluminum, tin, and copper, or an alloy, polypropylene, ABS plastics, polyvinyl chloride, polyacetal, polycarbonate, Polymer materials, such as a synthetic rubber and crude rubber, various Ceramics Sub-Division, etc. can be mentioned, and it is much more preferred about the corrosive metal of the thing of said metal or the product made from an alloy, especially iron, etc. to use that to which antirust processing or paint was performed.
[0053]Although a bag mouth holding fixture of this invention consists of a main part and a locking member for holding at least a part of opening peripheral edge part of a garbage bag, it is preferred to attach a handle to a main part, in order to raise handling nature.
[0054]Although not restricted profitably that what is necessary is just to determine suitably as length of a handle attached to this main part according to the purpose of use, they are a natural posture where people generally stood, or the posture which somewhat slouched, Length which can have an upper bed of a handle by hand is preferred, and, specifically, a 50-120-cm thing can be mentioned as suitable length as length of a handle including height of a main part.
[0055]In this invention, it also becomes a desirable mode about this handle to make it an elastic thing using several pipe shape material.
[0056]Although not limited especially as form of this handle, what has the fitting structure which can support a main part with a stable posture is desirable. A thing of structure which branched right and left and made a thing of fitting structure which made a lower end part of a handle fix in the center of a superior lamella portion of a main part, and the lower part of a handle specifically fix to a side attachment wall of right and left [each of this branched lower end part] of a main part can be mentioned. In addition, although mentioned later, a thing of structure which rotates a handle ahead and falls may be used.
[0057]It is desirable to make it easy to have by hand and to deal with by forming in the thing made to equip with the grip turned to the longitudinal direction so that it might be easy to have in the upper bed of this handle by hand, the thing which bent the upper bed of the handle back and made this bent portion equip with a grip, etc.
[0058]In this invention, if it has a handle by hand so that a ground surface or a floor line may be made to ground a part of opening of a garbage recovery bag by providing this handle further, it can be used like a dustpan. That is, it has this handle in one hand, has a broom by another one hand, and comes to be able to do fundamental usage [say / sweeping garbage in a garbage recovery bag].
[0059]The directions for use which do not use a broom in this invention are also possible. For example, when collecting the short branches and leaves caught in this hedge after pruning a hedge, The opening of the garbage recovery bag held with the holding fixture of this invention is made to meet the side attachment wall of this hedge, and if the branches and leaves caught in that upper hedge, garden tree, etc. are discarded, many branches and leaves can be supplied to this garbage recovery bag at once.
[0060]If it is made to win popularity by a bag mouth, having a tip of the handle of the holding fixture of this invention by hand when shaking a tree and a branch or discarding the caterpillar attached to the branch or the leaf with a stick, a caterpillar can be captured without being afraid also by the child or a woman.
[0061]When fallen leaves are piled up in large quantities, the opening of a garbage recovery bag can be pushed on a front lower part, and fallen leaves can also be directly dipped up like a shovel.
[0062]And in this invention, a locking member is only removed from the holding fixture of this invention, The opening of the garbage recovery bag can be removed from the holding fixture, and when the inside of a garbage recovery bag fills with garbage for this reason, it can take out to every

bag and garbage recovery as it is by connecting this opening or closing using a rubber band, a string, or adhesive tape.
[0063]Fallen leaves and the branches and leaves pruned and cut off can be carried to the destination with a track, a bicycle trailer, etc., without [without it moreover spills in large quantities by stuffing a big garbage recovery bag, and] being blown away by a wind.
[0064]By the way, in this invention, in order that the garbage stored in the garbage bag may prevent falling in the case of carrying, it is preferred to provide the covering device which can abbreviated-cover the opening of a garbage bag in a main part.
[0065]This covering device is in the state opened when sweeping garbage and acting as Hitoshi, and it is necessary to constitute it so that it may be closed, if it was when carrying garbage stored in the garbage bag.
[0066]A thing etc. which were made to constitute so that it can carry out to said front end edge part of a main part by making it change of direction of this main part interlocked with as such composition by pivoting a lid, having further operation which turned a switching action of this lid before and after said handle, and this handle by hand, and raising a main part, for example can be mentioned.
[0067]If constituted in this way, since opening and closing of a lid will make it correspond to existence of cleaning and will moreover be performed automatically, it is convenient, and since a lid has closed when lift a holding fixture, and moving or keeping it, it is good-looking and sanitary. And even if a dustpan is toppled carelessly, or there are things so that it may fall, inner garbage etc. are not scattered about outside.
[0068]
[Mode for carrying out the invention]It explains along with an embodiment hereafter shown in Drawings of attachment of concrete composition of a bag mouth holding fixture of a garbage recovery bag concerning this invention. In each figure corresponding to each following embodiment, explanation which gives identical codes to a common part and overlaps with it is given to omit.
[0069]First, the bag mouth holding fixture (it is hereafter called for short a holding fixture of a 1st embodiment or a holding fixture.) 1A of a garbage recovery bag in a 1st embodiment of this invention is explained.
[0070]The (a) figure is the same, a side view and the (b) figure are the same, and a front view shows a perspective view as which the (a) figure regarded a holding fixture of a 1st embodiment from the slanting front in drawing 1, a perspective view which the (b) figure is the same and looked at the important section from back, and drawing 2.
[0071]As shown in these each figure, the holding fixture 1A of a 1st embodiment comprises the main part 2 of the frame-like object which carried out the opening of anterior part and the rear, the handle 3 installed in the Kamiita part 2a center section, and the locking member 4.
[0072]This main part 2 has the Kamiita part 2a, the inferior lamella part 2d, the side plate part 2c on either side, and 2b, and the front end edge part of that inferior lamella part 2d projects it ahead, and it corresponds to this, It projects ahead, and has the inclined form ahead and the opening 5 of the front end part of this main part 2 is formed in it as the side plate part 2c on either side and the front end edge part of 2b go to a lower end from an upper bed.
[0073]And the portion 2e which met the periphery of a front of solvent in said main part 2 is formed in the low stage of about one board thickness, and it is constituted so that the locking member 4 which has frame form may fit in almost exactly along the peripheral face of this low step part 2e.
[0074]A little, the undersurface portion of the low step part 2e of this main part 2 inclines caudad, and in a posture when this main part 2 is put on a ground surface or a floor line, it is constituted by doing in this way so that this front of solvent may ground certainly to a ground surface or a floor line, as it goes to a front of solvent.
[0075]And in the approximately center part on the upper surface of superior lamella partial of this main part 2. The lower end part of the handle 3 which is Nagara has adhered, the upper bed part of

this handle 3 is bent back, the grip 7 is attached to this bent portion, and a worker can **** this grip 7 and can make it to change direction of the main part 2 or move with the holding fixture 1A.
[0076]The holding fixture 1A of a 1st embodiment that has such composition, After putting in, where it turned the opening peripheral edge part 9a of the garbage recovery bag 9 to the outside of the opening 5 of a front of solvent from the opening 6 side of the back end of the main part 2 and the opening of the bag mouth 10 is carried out, as shown in the (a) figure of drawing 3, as shown in the (b) figure, As this opening peripheral edge part 9a is turned up so that a peripheral face of the low step part 2e which forms the opening 5 of a front of solvent of the main part 2 may be met, it faces across this turned-up opening peripheral edge part 9a, and shown in drawing 4, a peripheral face of the low step part 2e of said main part 2 is made to meet, and the locking member 4 which has frame form is inserted in, and is used.
[0077]A side sectional view shows the state where the main part 2 was stopped where it carried out drawing 5 in this way and the opening of the opening peripheral edge part 9a of the garbage recovery bag 9 is carried out, Thus, if the main part 2 is made to stop the opening peripheral edge part 9a of the garbage recovery bag 9 and the garbage recovery bag 9 is made to hold to the holding fixture 1A, it will escape back and the garbage recovery bag 9 will not separate, unless this locking member 4 is removed.
[0078]Thus, if the garbage recovery bag 9 is held using the holding fixture 1A where the bag mouth 10 is opened, It can sweep with the broom which does not illustrate the garbage on a ground surface or a floor line like the conventional dustpan, and also unlike the conventional dustpan, direct and a lot of [moreover] garbage can be swept now in the big garbage recovery bag 9 as it is.
[0079]Thus, when the inside of the garbage recovery bag 9 fills abbreviation with the collected garbage, If this opening peripheral edge part 9a is connected, or it binds using a string etc. and the bag mouth 10 is closed after extracting by hand the locking member 4 inserted in the front of solvent of the main part 2, removing it and removing the opening peripheral edge part 9a of the garbage recovery bag 9 from the main part 2, It can take out to every garbage recovery bag 9 and garbage recovery then, or can carry now to the destination.
[0080]Then, the bag mouth holding fixture (it is hereafter called for short the holding fixture of a 2nd embodiment or a holding fixture.) 1B of the garbage recovery bag in a 2nd embodiment of this invention is explained.
[0081]drawing 6 -- the -- two -- an embodiment -- a holding fixture -- one -- B -- slant -- the front -- from -- having seen -- a perspective view -- drawing 7 -- (-- a --) -- a figure -- this -- the -- two -- an embodiment -- a holding fixture -- a part -- constituting -- a locking member -- slant -- back -- from -- having seen -- a perspective view -- said -- (-- b --) -- a figure -- the same -- the side -- a sectional view -- drawing 8 -- the -- two -- an embodiment -- a holding fixture -- one -- B -- a busy condition -- the side -- a sectional view -- being shown -- **** .
Since the holding fixture 1B of this 2nd embodiment had many parts which are common in the holding fixture 1A of a 1st embodiment mentioned above, it gave identical codes to the part which is common in drawing 1 thru/or drawing 5 in drawing 5 and drawing 8, and omitted the overlapping explanation in it.
[0082]As shown in drawing 6, although the main part 2 of the holding fixture 1B of this 2nd embodiment has the form of the approximately said appearance as the main part 2 of the holding fixture 1A of a 1st embodiment mentioned above, The low step part 2e currently formed in the front-of-solvent peripheral edge part of the main part 2 of a 1st embodiment is not formed in the main part 2 of this 2nd embodiment, but each front end part of the Kamiita part 2a, the inferior lamella part 2d, the right-and-left side plate part 2c, and 2b forms the peripheral edge part 2f of the opening 5 as it is.
[0083]In the locking member 41 used in the holding fixture 1B of this 2nd embodiment. As shown in drawing 5 thru/or drawing 7, it has the inclination frame form where the peripheral edge part 2f of main part 2 front of solvent which forms said opening 5 was met, and the concave 41a of the frame

form of a size which gets into this peripheral edge part 2f is deeply formed in that back end.
[0084]In order to make the holding fixture 1B of this 2nd embodiment stop the opening peripheral edge part 9a of the garbage recovery bag 9 where an opening is carried out as shown in drawing 8, Like the case of the holding fixture 1A of the 1st embodiment, the opening peripheral edge part 9a of the garbage recovery bag 9, It follows putting in, where the opening of the bag mouth 10 is carried out towards the outside of the opening 5 of a front of solvent from the opening 6 side of the back end of the main part 2, Turn up so that the peripheral face of the peripheral edge part 2f which forms the opening [in / for this opening peripheral edge part 9a / the front of solvent of the main part 2] 5 may be met, and it faces across this turned-up opening peripheral edge part 9a, This peripheral edge part 2f is made to stop this locking member 41 by stuffing the concave 41a of the locking member 41 into the peripheral edge part 2f of main part 2 front of solvent, and inserting it in.

[0085]If are constituted in this way and the garbage recovery bag 9 will be held using this holding fixture 1B where that bag mouth 10 is opened, It can sweep with the broom which does not illustrate the garbage on a ground surface or a floor line like the conventional dustpan, and direct and a lot of [moreover] garbage can be swept in the big, garbage recovery bag 9 moreover as it is.
[0086]Then, the bag mouth holding fixture (it is hereafter called for short a holding fixture of a 3rd embodiment or a holding fixture.) 1C of a garbage recovery bag in a 3rd embodiment of this invention is explained.
[0087]A perspective view which looked at the holding fixture 1C of a 3rd embodiment with which drawing 9 held a garbage recovery bag from the slanting front, Similarly a side view and the (b) figure which the (a) figure of drawing 10 similarly has in a ground state a front view and the (a) figure of drawing 11, a handle -- a lid -- the supporting structure -- expanding -- being shown -- a portion -- a side view -- said -- (-- b --) -- a figure -- the same -- one side -- a portion -- a sectional view -- drawing 12 -- (-- a --) -- a figure -- the same -- it -- having raised -- a state -- being shown -- a side view -- said -- (-- b --) -- a figure -- the same -- a front view -- being shown -- ****.
[0088]The holding fixture 1C of this 3rd embodiment attaches the lid 10 which opens and closes automatically to the holding fixture 1A of a 1st embodiment mentioned above. For this reason, explanation which gives identical codes to a part which is common to each part of the holding fixture 1A of a 1st embodiment, and overlaps with it is omitted.
[0089]As shown in each figure of drawing 9 thru/or drawing 11, a lower end part of the handle 3 in the holding fixture 1C of this 3rd embodiment, Have adhered in the center of the upper surface of the support component 11 which has the metal narrow width form of having front view and approximately upside down U form by welding etc., and a lower end part of right and left of this support component 11, It is pivoted so that this support component 11 may rotate forward and backward via the pins 14 and 14, respectively to the side plate part 2c of right and left of the main part 2, and 2b.
[0090]And in about five front opening [in the Kamiita part 2a of the main part 2] right and left ends. The pin receptacles 12 and 12 have adhered by welding or a rivet stop, With [the lobes / the lobes 10b and 10b of the back end of the side plate parts 10a and 10a which started and formed right and left ends of said lid 10 in these pin receptacles 12 and 12 are pivoted via the pins 13 and 13, and] such the supporting structure, It is constituted so that the opening 5 of said main part 2 front of solvent can be made to open and close with the lid 10.
[0091]And in the long hole 11c formed in an approximately center part in a right-and-left-sidewalls part of the pre-support component 11 by meeting up and down, and 11c, Make the pins 13 and 13 made to project from said side plate parts 10a and 10a rush in, and it carries out [stop] of the tip end part of the pins 13 and 13 projected from these long holes 11c and 11c with C ring 15 via the washers 25 and 25, It is constituted so that the pins 13 and 13 may escape from these long holes 11c and 11c and may not separate.

[0092]And in order to establish an interval further between said support component 11 and the side plate parts 10a and 10a of said lid 10, In order to make a portion have carried out insertion support of the short cylinder-shaped spacers 16 and 16 and to provide an interval in it in a similar manner between said support component 11 and the left right side board parts 2c and 2d of said main part 2 in the middle of said pins 13 and 13, A portion is made to carry out insertion support of the short cylinder-shaped spacers 17 and 17 in the middle of said pins 14 and 14.
[0093]Thus, if the support component 11 and the lid 10 which adhered the handle 3 are attached to the main part 2, rotation of the handle 5 which was united with the support component 9 will be attained at a cross direction.
[0094]As it constitutes in this way and is shown in each figure of drawing 9 and drawing 10, when Nagara 5 is uprighted and the main part 2 is put on a ground surface or a floor line, As said pins 13 and 13 make it located in an upper bed in said long hole 11c and 11c, the lid 10 is greatly opened to upper rear and it is further shown in the (a) figure of drawing 12, If it is made for these pins 13 and 13 to move to a lower end part of said long holes 11c and 11c when the lid 10 closes, If the whole holding fixture 1C is raised by the handle 3, by weight balance of the garbage recovery bag 9 or self, it will rotate in the direction which the opening 5 of main part 2 front of solvent turns to up, and this main part 2 will be taken to this motion, and will also close the lid 10 simultaneously.
[0095]If it is made the posture which made it ground so that the opening 5 of main part 2 front of solvent may be ahead suitable, and turned the handle 3 up as shown in each figure of drawing 10, it will take to this motion and the lid 10 will be opened greatly.
[0096]Since the maintenance and the directions for the garbage recovery bag 9 in the holding fixture 1C of a 3rd embodiment that has such composition are the same as that of the case of the holding fixture 1A of a 1st embodiment as shown in drawing 13 and drawing 14, the explanation is omitted.
[0097]Although not illustrated, in order to stabilize rotation by the center of gravity of the main part 2, and its posture, it is desirable to take into consideration the pivoting part of said support component 11 for the rear end part of the main part 2 heavily.
[0098]The bag mouth holding fixture (it is hereafter called for short the holding fixture of a 4th embodiment or a holding fixture.) 1D of the garbage recovery bag in a 4th embodiment of this invention is explained.
[0099]Similarly the perspective view which looked at the holding fixture 1D of a 4th embodiment with which drawing 15 held the garbage recovery bag from the slanting front, the important section perspective view showing the state where drawing 16 similarly held the garbage recovery bag 9, and drawing 17 are side sectional views. The holding fixture 1D of this 4th embodiment is constituted so that the lid 10 may open and close like a 3rd embodiment mentioned above, and for this reason, it is made to omit the overlapping explanation by attaching drawing 9 thru/or each figure and identical codes of drawing 15 about explanation of the opening and closing structure of this lid 10.
[0100]The holding fixture 1D of this 4th embodiment has the feature in locking structure of the opening 9a of the garbage recovery bag 9. That is, as shown in drawing 15, the crevice 2g which consists of a slot of one sections for inserting in and making it stop from the peripheral edge part 2f concerned where the rubber band 30 is opened and lengthened is formed in a peripheral face near 2 f of the ****** which form the opening 3 of main part 2 front face.
[0101]And where the opening of the opening peripheral edge part 9a which the garbage recovery bag 9 turned up is carried out by the same technique as a case of each embodiment mentioned above, As it turns up so that an about five opening [of the main part 2] peripheral face may be met, and this turned-up portion is pinched and it is shown in drawing 16 and drawing 17, The rubber band 30 is stopped in said crevice 2g of the main part 2, and the main part 2 is made to stop the part 9a near the bag mouth of the garbage recovery bag 9 with hauling power of this rubber band 30.
[0102]If constituted in this way, since the position of said crevice 9 does not shift or it does not escape and separate, the rubber band 30 is very effective when the opening 5 of main part 2 front

of solvent is formed in the oblique direction.
[0103]
[Effect of the Invention]According to the bag mouth holding fixture (it is hereafter called the holding fixture of this invention for short.) of the garbage recovery bag concerning this invention explained above, the following effects are done so. The biggest effect by moreover, having constituted, carrying out the opening of the bag mouth of a garbage recovery bag using the holding fixture of this invention, so that a part of the opening could ground along a ground surface or a floor line, The branches and leaves etc. which fell and remained in the ground surface after pruning garbage waste, a kitchen garbage and saw dust, dust, fallen leaves, hedges, garden trees scattered on a ground surface or a floor line, etc. can be swept now in a garbage recovery bag like a dustpan using a broom.
[0104]As a result, although it seems that the fallen leaves which were being swept and collected into the dustpan might be blown away by the wind in the former, since fallen leaves can be directly swept in a garbage recovery bag if the holding fixture of this invention is used, it is completely lost that fallen leaves are flown by a wind.
[0105]And in the holding fixture of this invention, if it is when a handle is provided in the holding fixture concerned, effects, like handling nature improves, for example, it is a posture where the worker has been formed and the work can be done comfortably are done so.
[0106]In the holding fixture of this invention, if it is made to stop where the opening of the bag mouth close part of a big garbage recovery bag is carried out, as a result of being able to carry much garbage at once, the time and effort and efficiency of work do a substantially improvable effect so.
[0107]And in the holding fixture of this invention, since garbage can be dumped together with a garbage recovery bag or can be taken out to garbage recovery, when dumping garbage, it becomes without soiling a hand and clothes and effects, like it is very sanitary and is are done so.

[Translation done.]

* NOTICES *

JPO and INPIT are not responsible for any
damages caused by the use of this translation.

1.This document has been translated by computer. So the translation may not reflect the original precisely.
2.**** shows the word which can not be translated.
3.In the drawings, any words are not translated.

TECHNICAL FIELD

[Field of the Invention]This invention relates to the bag mouth holding fixture which can sweep directly the branches and leaves etc. which fell and remained in the ground surface after pruning garbage waste, a kitchen garbage and saw dust, dust, fallen leaves, hedges, garden trees scattered on a ground surface, a floor line, etc., etc. in a garbage bag using a broom etc.

[Translation done.]

* NOTICES *

JPO and INPIT are not responsible for any
damages caused by the use of this translation.

1.This document has been translated by computer. So the translation may not reflect the original precisely.
2.**** shows the word which can not be translated.
3.In the drawings, any words are not translated.

PRIOR ART

[Description of the Prior Art]When tidying up what becomes garbage, such as branches and leaves which fell and remained in the ground surface, after pruning garbage waste, a kitchen garbage and saw dust, dust, fallen leaves, hedges, garden trees scattered on a ground surface or a floor line, etc., in the former, the garbage which moved the garbage in a dustpan to the garbage can or the garbage bag, or was put into the dustpan after sweeping these with a broom, collecting them and sweeping on a dustpan -- the nearby space destroying by fire -- it threw away, it carried to the place, and was refunding, thru/or throwing away and making.

[Translation done.]

* NOTICES *

JPO and INPIT are not responsible for any
damages caused by the use of this translation.

1.This document has been translated by computer. So the translation may not reflect the original precisely.
2.**** shows the word which can not be translated.
3.In the drawings, any words are not translated.

EFFECT OF THE INVENTION

[Effect of the Invention]According to the bag mouth holding fixture (it is hereafter called the holding fixture of this invention for short.) of the garbage recovery bag concerning this invention explained above, the following effects are done so. The biggest effect by moreover, having constituted, carrying out the opening of the bag mouth of a garbage recovery bag using the holding fixture of this invention, so that a part of the opening could ground along a ground surface or a floor line, The branches and leaves etc. which fell and remained in the ground surface after pruning garbage waste, a kitchen garbage and saw dust, dust, fallen leaves, hedges, garden trees scattered on a ground surface or a floor line, etc. can be swept now in a garbage recovery bag like a dustpan using a broom.
[0104]As a result, although it seems that the fallen leaves which were being swept and collected into the dustpan might be blown away by the wind in the former, since fallen leaves can be directly swept in a garbage recovery bag if the holding fixture of this invention is used, it is completely lost that fallen leaves are flown by a wind.
[0105]And in the holding fixture of this invention, if it is when a handle is provided in the holding fixture concerned, effects, like handling nature improves, for example, it is a posture where the worker has been formed and the work can be done comfortably are done so.
[0106]In the holding fixture of this invention, if it is made to stop where the opening of the bag mouth close part of a big garbage recovery bag is carried out, as a result of being able to carry much garbage at once, the time and effort and efficiency of work do a substantially improvable effect so.
[0107]And in the holding fixture of this invention, since garbage can be dumped together with a garbage recovery bag or can be taken out to garbage recovery, when dumping garbage, it becomes without soiling a hand and clothes and effects, like it is very sanitary and is are done so.

[Translation done.]

* NOTICES *

JPO and INPIT are not responsible for any
damages caused by the use of this translation.

1.This document has been translated by computer. So the translation may not reflect the original precisely.
2.**** shows the word which can not be translated.
3.In the drawings, any words are not translated.

TECHNICAL PROBLEM

[Problem to be solved by the invention]However, when garbage is swept on a dustpan in this way, and it was made to put in in a garbage can or a garbage bag, and fallen leaves are swept and collected on a windy day and it puts into a dustpan, When moving the fallen leaves in a dustpan in a garbage can or a garbage bag, and fallen leaves etc. are blown away by a wind, and may disperse and it became such, it had to sweep, and it became useless, and it had to return to lost labor and it had to collect [cleaning had to sweep scattered fallen leaves again, had to collect them, and] them.
[0004]Since it became obstructive when it had a garbage bag by hand when sweeping, collecting and collecting fallen leaves with a broom and a dustpan, a garbage bag will be put on a ground surface, but the fallen leaves in a garbage bag or a garbage bag, etc. might be flown by the wind at this time.
[0005]When late autumn comes, under a park and a street tree with many trees, When fallen leaves have spread and fallen on the whole surface and it was going to collect a lot of [in this way] fallen leaves using the broom and the dustpan, work time-consuming [of the inside of a dustpan filling with fallen leaves immediately, and moving the fallen leaves in a dustpan in a garbage can or a garbage bag repeatedly] was required.
[0006]Such SUBJECT occurred, when collecting a lot of branches and leaves which fell and remained in the ground surface after pruning of a big hedge, a garden tree, etc., and also when collecting much garbage.
[0007]As a result of repeating examination wholeheartedly as the dustpan with which this invention person cancels above-mentioned SUBJECT is not made, it came to invent the bag mouth holding fixture of the new comfort recovery bag applied to this invention at last.
[0008]This invention which came to be completed through such the circumstances, The grocery sack of throwing away provided in a supermarket besides a commercial plastic bag or a garbage bag etc., Garbage bags, such as a large-sized bag used for a package and storage of goods and an exclusive bag of each store, are used as a garbage recovery bag, The end of the opening in this garbage bag is made to meet almost in parallel to a ground surface or a floor line, It aims at providing the bag mouth holding fixture which makes it possible to sweep the branches and leaves etc. which fell and remained in the ground surface after pruning garbage waste, a kitchen garbage and saw dust, dust, fallen leaves, hedges, garden trees scattered on a ground surface or a floor line, etc. in garbage bags, such as a direct garbage recovery bag, using a broom.

[Translation done.]

* NOTICES *

JPO and INPIT are not responsible for any
damages caused by the use of this translation.

1.This document has been translated by computer. So the translation may not reflect the original precisely.
2.**** shows the word which can not be translated.
3.In the drawings, any words are not translated.

MEANS

[Means for solving problem]The bag mouth holding fixture of this invention proposed as the above The means for solving a technical problem, The grocery sack of throwing away with which a main part and this main part are provided in a supermarket besides a commercial plastic bag or a garbage bag etc., for example, It is a bag mouth holding fixture which consists of locking members in order to make it stop where it held at least a part of opening peripheral edge part of garbage bags, such as a large-sized bag used for a package and storage of goods, and an exclusive bag of each store, and the opening of the garbage bag concerned is carried out, Said main part is provided with the inferior lamella part which has a front end edge which meets to a ground surface or a floor line, it stops at least a part of opening peripheral edge part of said garbage bag by said locking member so that said inferior lamella part may be met, and it can be used for it like a dustpan.
[0010]That is, the bag mouth holding fixture concerning this invention makes the end of the opening in garbage bags, such as a garbage recovery bag, meet almost in parallel to a ground surface or a floor line, and enables it to sweep garbage with a broom.
[0011]As mentioned above, the garbage recovery bag used in this invention, Various garbage bags, such as a grocery sack of throwing away provided in a supermarket besides not the thing limited especially but a commercial plastic bag or a garbage bag etc., a large-sized bag used for a package and storage of goods, and an exclusive bag of each store, can be used conveniently.
[0012]A commercial plastic bag and garbage bag are a bag of the rectangle made with the film made of resin, and the size can apply anything of a size to the bag mouth holding fixture of this invention, for example, although various kinds of things, such as a thing for 45 l. and a thing for 70 l., are marketed.
[0013]The grocery sack of throwing away provided in a supermarket etc., Generally it is formed with the film made from high density polyethylene, and are rich in a water resisting property, It is strong, and since it is brought back to each home by the degree of shopping and becomes unnecessary after that in many cases, this bag has a thing of various kinds [size / of those / it is satisfactorily recoverable and also / stools, such as dog and cat which were obtained easily and made not only into wet garbage waste etc. but into a kitchen garbage, and on the street and the yard, or], but. Although the grocery sack applied to the holding fixture of this invention is not necessarily limited, as a result of being able to accommodate many garbage which is lightweight and is bulky, such as fallen leaves, it makes suitable what has large capacity as much as possible.
[0014]Into the large-sized bag used for a package and storage of goods. For example, since it is wrapped with the transparent bag made from vinyl in the carton box and this big bag made from vinyl becomes unnecessary after these purchase when consumers purchase, this bag is used for products, such as large-sized television and a desktop PC, as a bag for garbage recovery. In addition, the rice bag made from vinyl which makes rice 5-kg stuffing and 10-kg stuffing, and is marketing it is also the target of application.
[0015]In addition, with an exclusive bag of each store, a bag etc. which were made with bags, these

raw materials, strong textile fabrics, or a nonwoven fabric of throwing away of a paper bag, water resistance or a waterproofed paper bag, a bag made with a film made of a synthetic resin, etc. and which can carry out repetition use are mentioned.
[0016]And a bag mouth holding fixture of this invention stops at least a part of opening peripheral edge part of said garbage bag using a suspending portion later mentioned so that a parallel inferior lamella part which is, carries out and has a front end edge almost in parallel may be met to a ground surface or a floor line, and carries out it as [sweep / garbage / with a broom] like a dustpan.
[0017]About form of an inferior lamella part with which this main part was equipped. If it has a parallel front end edge which is, carries out and becomes almost parallel to a ground surface or a floor line, it will not be what is limited especially, What is necessary is just to determine suitably according to the purpose of use etc., also about the size and width, people can have by hand and it can carry, and it will not be limited especially if it is a size of a grade and a thing of width which sweep garbage efficiently using a broom.
[0018]Although a "front end edge" means an edge part ahead of an inferior lamella part, here, For example, in [since garbage will be caught in an edge of a main part if space is made between a ground surface etc. and the inferior lamella part front when wearing garbage in a ground surface or a floor line to a garbage bag] this invention, It constitutes so that the Taira deed may be carried out to a ground surface or a floor line about this portion (front end edge) and it may become almost parallel, and garbage needs to be made to be swept by garbage bag smoothly.
[0019]in addition -- as opposed to "ground surface or a floor line -- between not the parallel meaning with strict almost parallel" that is and carries out and that is searched for until parallel but a ground surface, etc. and the inferior lamella part front -- an excess (superfluous) -- it means that the parallel which are the grades which cannot do space are obtained
[0020]In the bag mouth holding fixture of this invention, by adopting the sliding structure and folding structure using two or more plates, rails, etc., or insertion structure about said inferior lamella part, It is preferred to enable it to change the width flexibly, and the width can also be arbitrarily changed according to the purpose which this uses, the size of the opening of a garbage bag, etc.
[0021]Although limited and carried out about neither the frontage of this inferior lamella part, nor order width (depth) in particular, generally what has several centimeter - about 50-cm order width is preferred.
[0022]Of course, this main part may be an extremely short thing which order [this] width (depth) calls several centimeters - 10 cm. In this case, since a main part becomes lightweight, there is an advantage of carrying and becoming easy to carry out.
[0023]In the bag mouth holding fixture of this invention, as a main part, Although it consists only of an inferior lamella part, since a user needs to raise the end of a garbage bag by hand and the thing of this composition needs to carry out the opening of the garbage bag in the case of use, it may be necessary to work with the posture over [posture] the user leaned or, and a hand may become dirty.
[0024]Then, in the bag mouth holding fixture of this invention, providing a columnar member toward the upper part from an inferior lamella part, or providing a side wall member in the end rim of one side of an inferior lamella part or both sides, starting the attached garbage bag as desirable composition of a main part, for example, and making it an opening spread is mentioned.
[0025]In the bag mouth holding fixture of this invention, what is a frame-like object provided with the inferior lamella part which has a front end edge which a main part meets to a ground surface or a floor line as desirable composition of a main part at least (the Taira deed is carried out and it becomes almost parallel) is mentioned.
[0026]That is, by using a main part as a frame-like object, a mechanical strength can improve, the garbage bag attached especially can hang down with the dignity, and the state where the opening of a garbage bag blockades can be avoided.
[0027]It is not that by which a "frame-like object" is limited only to the thing, front view square, or

front view abbreviation square of a front view rectangle thru/or a front view abbreviation rectangle in this invention, Although the opening of the garbage bag further attached by also containing polygon types, such as a semicircle type, a half elliptic, Quonset or a pentagon, and a hexagon, and constituting in this way can be extended greatly, This "frame-like object" is provided with the inferior lamella part which has a front end edge which meets to a ground surface or a floor line at least (the Taira deed is carried out and it becomes almost parallel), and things are required.
[0028]what provided the columnar member as a main part in this invention and the thing which provided the side wall member in the end rim of one side of an inferior lamella part, or both sides -- or, When it is preferred to constitute so that it may fold up and a main part can be miniaturized about a columnar member, a side wall member, etc., if it is when the thing of a frame-like object is adopted and it constitutes in this way, Storage becomes simple and stops needing a big housed place in the case where portability does not improve further and the bag mouth holding fixture of this invention is not used etc.
[0029]By the way, in this invention, if it is when adopting said frame-like object as a main part, it is preferred to make the front end part of the inferior lamella part project ahead.
[0030]Since the tip of a broom is sent in in the bag mouth of a garbage recovery bag and garbage etc. can be easily swept if the front end part in the inferior lamella part of a main part is made into the form which made it project ahead, it sweeps and falls, and ** becomes there is not less and the difficulty of sweeping can also be canceled. Since this bag mouth can be seen with the posture which has stood automatically for the worker when sweeping garbage in a bag mouth using a broom, it is not necessary to slouch at the time of cleaning, and garbage can be swept with an easy posture.
[0031]In this invention, that by which the low step part which stabilizes the fixing position of the locking member mentioned later was formed in the front end edge of said main part or its neighborhood is preferred.
[0032]Since the low step part described here does not fit in too much deeply and can arrange the lower part of a locking member, and the undersurface portion of a main part with abbreviated flush, for example, when inserting in a locking member along said front end edge of a main part, ON ** can be made easy to ground a main part along a ground surface or a floor line, and for garbage with a broom to sweep, and to carry out.
[0033]A position gap can be prevented from these falling out, and separating or arising, if it is for example, when twisting locking members, such as a rubber band, a string, and a band for conclusion, and stopping the opening of a garbage bag along the front end edge in said main part.
[0034]That is, when these locking members form the low step part which fits in exactly along the front end edge in a main part, handling nature can improve and, moreover, the omission blank of a locking member and a position gap can be prevented.
[0035]In this invention, as construction material used for a main part, Although not limited in particular, specifically For example, iron, stainless steel, Metal or alloys, such as nickel, chromium, aluminum, tin, and copper, Polypropylene, ABS plastics, polyvinyl chloride, polyacetal, polycarbonate, The polymer material of either a synthetic rubber, crude rubber, elastomers, etc., What was formed by any one or more sorts in various Ceramics Sub-Division etc. can be mentioned, and it is much more preferred about the aforementioned metal or the thing made from an alloy, and especially corrosive metal to use that to which antirust processing or paint was performed.
[0036]And although the bag mouth holding fixture of this invention consists of a main part provided with the inferior lamella part of such composition, and a locking member for holding at least a part of opening peripheral edge part of a garbage bag on said main part, As this locking member, especially if the opening peripheral edge part of a garbage bag can be detained on a main part, it is not restricted, and it may be made to stop across the opening peripheral edge part of a garbage recovery bag for example, to a hook, a clip, etc. which were fixed to the proper place of an inferior lamella part.

[0037]However, in this invention, what a main part and a locking member can detach and attach freely is preferred, and specifically for example, What can insert a part thru/or all of an opening of said garbage recovery bag into this main part can be mentioned using the locking member which is made to meet near [that] the front of solvent, and can be pinched from the front of said main part enabling free attachment and detachment.
[0038]Thus, when the opening of a garbage recovery bag is pinched ahead of a main part and stopped using a locking member, this opening close part is firmly fixed ahead of a main part. And when removing a garbage recovery bag from a main part, it can carry out by easy operation in which it is only to extract and remove this locking member from a main part.
[0039]This locking member is fixed on both sides of the opening of a garbage recovery bag between locking member material and a main part so that it may escape from a main part carelessly and may not separate. For this reason, it separates and a locking member does not fall, unless it draws out by hand. In order to make it this locking member not fit into a main part too much deep, in addition, it is good for a main part to provide a projection.
[0040]As other locking members, it inserts in in the state which can be freely detached and attached from the front of said main part to the front-of-solvent peripheral edge part, and a locking member in which a concave which can insert an opening of said garbage recovery bag into a main part was formed can be mentioned.
[0041]About how a concave of this locking member is formed, if this locking member is a metal thing, what carried out press forming will be mentioned, for example. If resin and material of a rubber system are used as a formation material of a locking member, that in which a concave was formed can be mentioned by injection moulding, vacuum forming, pressure forming, etc.
[0042]By inserting a front end part of said main part in a concave of such a locking member, a front end part of a main part can be equipped with a locking member, enabling free attachment and detachment, and as mentioned above on the occasion of this wearing, it sandwiches an opening of a garbage recovery bag between a concave and a front end edge of a main part.
[0043]Thus, if a main part is made to stop an opening of a garbage recovery bag, even if it forms in a thick locking member, only by making a lower end part of this locking member into inclination shape, garbage by a level difference with a ground surface or a floor line can sweep, and the difficulty of putting in can be canceled. Since it can stop on both sides of an opening of a garbage recovery bag, an omission blank of a pinched portion is hardly produced.
[0044]A concave for inserting in on both sides of an opening of said garbage recovery bag as other locking members in the state which can be freely detached and attached in a proper place of a front end part of said main part can mention a clip formed in the back end.
[0045]About a clip which an inferior lamella part in said main part is made to stop among clips used here. It is desirable to use a thing of inclination shape it was made to become high gradually as it goes to the back end from a tip end part by the side of a base for a long time in a transverse direction so that a bag mouth of a garbage recovery bag may float from a ground surface or a floor line and it may not become impossible to sweep garbage. About a clip which stops except an inferior lamella part in said main part, a short-shaped thing may be used crosswise.
[0046]About these clips, what can be stopped according to elastic force by a clip's own raw material is used.
[0047]It is mentioned any of a rubber band, a string, and a band for conclusion which suppress an opening of said garbage recovery bag to a front end part of said main part they are as other locking members.
[0048]That is, after collecting garbage, a rubber band or a string for which it was prepared along said front end part of a main part, or a band for conclusion performs a stop of an opening of a garbage recovery bag.
[0049]Thus, if the opening of a garbage recovery bag is stopped using a rubber band, a string, and the band for conclusion, the stop can carry out by an easy and inexpensive method. And with the

power with the elasticity and string of rubber to bind, the opening close part of a garbage bag can be stopped certainly, and also release of the stop can also be performed easily.
[0050]The thing with which clasps, such as a hook, are formed in the both ends of the elastic tape which has strong hauling power as a band for conclusion used here, for example, and both clasps can be made to connect is desirable.
[0051]When stopping the opening of a garbage bag on a main part using said various locking members, can consider the case where it stops so that a main part may be located in the outside of a garbage bag, and the case where it stops so that a main part may be located in the inside side of a garbage bag, but. As for a user, it is arbitrary any are chosen in this invention, and it occurs.
[0052]In this invention, when a main part is a frame-like object, the frame-like object and U-character shaped body which fit into this may use a locking member, but as construction material used for this locking member, Although not limited in particular, specifically For example, iron, nickel, Metal, such as chromium, stainless steel, aluminum, tin, and copper, or an alloy, polypropylene, ABS plastics, polyvinyl chloride, polyacetal, polycarbonate, Polymer materials, such as a synthetic rubber and crude rubber, various Ceramics Sub-Division, etc. can be mentioned, and it is much more preferred about the corrosive metal of the thing of said metal or the product made from an alloy, especially iron, etc. to use that to which antirust processing or paint was performed.
[0053]Although the bag mouth holding fixture of this invention consists of a main part and a locking member for holding at least a part of opening peripheral edge part of a garbage bag, it is preferred to attach a handle to a main part, in order to raise handling nature.
[0054]Although not restricted profitably that what is necessary is just to determine suitably as length of the handle attached to this main part according to the purpose of use, they are the natural posture where people generally stood, or the posture which somewhat slouched, The length which can have an upper bed of a handle by hand is preferred, and, specifically, a 50-120-cm thing can be mentioned as suitable length as length of a handle including the height of the main part.
[0055]In this invention, it also becomes a desirable mode about this handle to make it an elastic thing using several pipe shape material.
[0056]Although not limited especially as form of this handle, what has the fitting structure which can support a main part with the stable posture is desirable. The thing of structure which branched right and left and made the thing of fitting structure which made the lower end part of the handle fix in the center of the superior lamella portion of a main part, and the lower part of the handle specifically fix to the side attachment wall of the right and left [each of this branched lower end part] of a main part can be mentioned. In addition, although mentioned later, the thing of structure which rotates a handle ahead and falls may be used.
[0057]It is desirable to make it easy to have by hand and to deal with by forming in the thing made to equip with the grip turned to the longitudinal direction so that it might be easy to have in the upper bed of this handle by hand, the thing which bent the upper bed of the handle back and made this bent portion equip with a grip, etc.
[0058]In this invention, if it has a handle by hand so that a ground surface or a floor line may be made to ground a part of opening of a garbage recovery bag by providing this handle further, it can be used like a dustpan. That is, it has this handle in one hand, has a broom by another one hand, and comes to be able to do fundamental usage [say / sweeping garbage in a garbage recovery bag].
[0059]The directions for use which do not use a broom in this invention are also possible. For example, when collecting the short branches and leaves caught in this hedge after pruning a hedge, The opening of the garbage recovery bag held with the holding fixture of this invention is made to meet the side attachment wall of this hedge, and if the branches and leaves caught in that upper hedge, garden tree, etc. are discarded, many branches and leaves can be supplied to this garbage recovery bag at once.
[0060]If it is made to win popularity by a bag mouth, having a tip of the handle of the holding fixture of this invention by hand when shaking a tree and a branch or discarding the caterpillar attached to

the branch or the leaf with a stick, a caterpillar can be captured without being afraid also by the child or a woman.
[0061]When fallen leaves are piled up in large quantities, an opening of a garbage recovery bag can be pushed on a front lower part, and fallen leaves can also be directly dipped up like a shovel.
[0062]And in this invention, a locking member is only removed from a holding fixture of this invention, An opening of a garbage recovery bag can be removed from a holding fixture, and when inside of a garbage recovery bag fills with garbage for this reason, it can take out to every bag and garbage recovery as it is by connecting this opening or closing using a rubber band, a string, or adhesive tape.
[0063]Fallen leaves and branches and leaves pruned and cut off can be carried to a destination with a track, a bicycle trailer, etc., without [without it moreover spills in large quantities by stuffing a big garbage recovery bag, and] being blown away by a wind.
[0064]By the way, in this invention, in order that garbage stored in a garbage bag may prevent falling in the case of carrying, it is preferred to provide a covering device which can abbreviated-cover an opening of a garbage bag in a main part.
[0065]This covering device is in a state opened when sweeping garbage and acting as Hitoshi, and it is necessary to constitute it so that it may be closed, if it was when carrying garbage stored in a garbage bag.
[0066]The thing etc. which were made to constitute so that it can carry out to said front end edge part of a main part by making it change of direction of this main part interlocked with as such composition by pivoting a lid, having further the operation which turned the switching action of this lid before and after said handle, and this handle by hand, and raising a main part, for example can be mentioned.
[0067]If constituted in this way, since opening and closing of a lid will make it correspond to the existence of cleaning and will moreover be performed automatically, it is convenient, and since the lid has closed when lift a holding fixture, and moving or keeping it, it is good-looking and sanitary. And even if a dustpan is toppled carelessly, or there are things so that it may fall, inner garbage etc. are not scattered about outside.
[0068]
[Mode for carrying out the invention]It explains along with the embodiment hereafter shown in the Drawings of attachment of the concrete composition of the bag mouth holding fixture of the garbage recovery bag concerning this invention. In each figure corresponding to each following embodiment, explanation which gives identical codes to a common part and overlaps with it is given to omit.
[0069]First, the bag mouth holding fixture (it is hereafter called for short the holding fixture of a 1st embodiment or a holding fixture.) 1A of the garbage recovery bag in a 1st embodiment of this invention is explained.
[0070]The (a) figure is the same, a side view and the (b) figure are the same, and the front view shows the perspective view as which the (a) figure regarded the holding fixture of a 1st embodiment from the slanting front in drawing 1, the perspective view which the (b) figure is the same and looked at the important section from back, and drawing 2.
[0071]As shown in these each figure, the holding fixture 1A of a 1st embodiment comprises the main part 2 of a frame-like object which carried out the opening of anterior part and the rear, the handle 3 installed in the Kamiita part 2a center section, and the locking member 4.
[0072]This main part 2 has the Kamiita part 2a, the inferior lamella part 2d, the side plate part 2c on either side, and 2b, and a front end edge part of that inferior lamella part 2d projects it ahead, and it corresponds to this, It projects ahead, and has the inclined form ahead and the opening 5 of a front end part of this main part 2 is formed in it as the side plate part 2c on either side and a front end edge part of 2b go to a lower end from an upper bed.
[0073]And the portion 2e which met the periphery of a front of solvent in said main part 2 is formed in a low stage of about one board thickness, and it is constituted so that the locking member 4

which has frame form may fit in almost exactly along a peripheral face of this low step part 2e.
[0074]A little, an undersurface portion of the low step part 2e of this main part 2 inclines caudad, and in a posture when this main part 2 is put on a ground surface or a floor line, it is constituted by doing in this way so that this front of solvent may ground certainly to a ground surface or a floor line, as it goes to a front of solvent.
[0075]And in an approximately center part on the upper surface of superior lamella partial of this main part 2. A lower end part of the handle 3 which is Nagara has adhered, an upper bed part of this handle 3 is bent back, the grip 7 is attached to this bent portion, and a worker can **** this grip 7 and can make it to change direction of the main part 2 or move with the holding fixture 1A.
[0076]The holding fixture 1A of a 1st embodiment that has such composition, After putting in, where it turned the opening peripheral edge part 9a of the garbage recovery bag 9 to the outside of the opening 5 of a front of solvent from the opening 6 side of the back end of the main part 2 and the opening of the bag mouth 10 is carried out, as shown in the (a) figure of drawing 3, as shown in the (b) figure, As this opening peripheral edge part 9a is turned up so that the peripheral face of the low step part 2e which forms the opening 5 of the front of solvent of the main part 2 may be met, it faces across this turned-up opening peripheral edge part 9a, and shown in drawing 4, the peripheral face of the low step part 2e of said main part 2 is made to meet, and the locking member 4 which has frame form is inserted in, and is used.
[0077]The side sectional view shows the state where the main part 2 was stopped where it carried out drawing 5 in this way and the opening of the opening peripheral edge part 9a of the garbage recovery bag 9 is carried out, Thus, if the main part 2 is made to stop the opening peripheral edge part 9a of the garbage recovery bag 9 and the garbage recovery bag 9 is made to hold to the holding fixture 1A, it will escape back and the garbage recovery bag 9 will not separate, unless this locking member 4 is removed.
[0078]Thus, if the garbage recovery bag 9 is held using the holding fixture 1A where the bag mouth 10 is opened, It can sweep with the broom which does not illustrate the garbage on a ground surface or a floor line like the conventional dustpan, and also unlike the conventional dustpan, direct and a lot of [moreover] garbage can be swept now in the big garbage recovery bag 9 as it is.
[0079]Thus, when the inside of the garbage recovery bag 9 fills abbreviation with the collected garbage, If this opening peripheral edge part 9a is connected, or it binds using a string etc. and the bag mouth 10 is closed after extracting by hand the locking member 4 inserted in the front of solvent of the main part 2, removing it and removing the opening peripheral edge part 9a of the garbage recovery bag 9 from the main part 2, It can take out to every garbage recovery bag 9 and garbage recovery then, or can carry now to the destination.
[0080]Then, the bag mouth holding fixture (it is hereafter called for short the holding fixture of a 2nd embodiment or a holding fixture.) 1B of the garbage recovery bag in a 2nd embodiment of this invention is explained.
[0081]drawing 6 -- the -- two -- an embodiment -- a holding fixture -- one -- B -- slant -- the front -- from -- having seen -- a perspective view -- drawing 7 -- (-- a --) -- a figure -- this -- the -- two -- an embodiment -- a holding fixture -- a part -- constituting -- a locking member -- slant -- back -- from -- having seen -- a perspective view -- said -- (-- b --) -- a figure -- the same -- the side -- a sectional view -- drawing 8 -- the -- two -- an embodiment -- a holding fixture -- one -- B -- a busy condition -- the side -- a sectional view -- being shown -- **** .
Since the holding fixture 1B of this 2nd embodiment had many parts which are common in the holding fixture 1A of a 1st embodiment mentioned above, it gave identical codes to the part which is common in drawing 1 thru/or drawing 5 in drawing 5 and drawing 8, and omitted the overlapping explanation in it.
[0082]As shown in drawing 6, although the main part 2 of the holding fixture 1B of this 2nd embodiment has the form of the approximately said appearance as the main part 2 of the holding fixture 1A of a 1st embodiment mentioned above, The low step part 2e currently formed in the

front-of-solvent peripheral edge part of the main part 2 of a 1st embodiment is not formed in the main part 2 of this 2nd embodiment, but each front end part of the Kamiita part 2a, the inferior lamella part 2d, the right-and-left side plate part 2c, and 2b forms the peripheral edge part 2f of the opening 5 as it is.
[0083]In the locking member 41 used in the holding fixture 1B of this 2nd embodiment. As shown in drawing 5 thru/or drawing 7, it has the inclination frame form where the peripheral edge part 2f of main part 2 front of solvent which forms said opening 5 was met, and the concave 41a of the frame form of a size which gets into this peripheral edge part 2f is deeply formed in that back end.
[0084]In order to make the holding fixture 1B of this 2nd embodiment stop the opening peripheral edge part 9a of the garbage recovery bag 9 where an opening is carried out as shown in drawing 8, Like a case of the holding fixture 1A of the 1st embodiment, the opening peripheral edge part 9a of the garbage recovery bag 9, It follows putting in, where the opening of the bag mouth 10 is carried out towards the outside of the opening 5 of a front of solvent from the opening 6 side of the back end of the main part 2, Turn up so that a peripheral face of the peripheral edge part 2f which forms the opening [in / for this opening peripheral edge part 9a / a front of solvent of the main part 2] 5 may be met, and it faces across this turned-up opening peripheral edge part 9a, This peripheral edge part 2f is made to stop this locking member 41 by stuffing the concave 41a of the locking member 41 into the peripheral edge part 2f of main part 2 front of solvent, and inserting it in.
[0085]If are constituted in this way and the garbage recovery bag 9 will be held using this holding fixture 1B where that bag mouth 10 is opened, It can sweep with a broom which does not illustrate garbage on a ground surface or a floor line like the conventional dustpan, and direct and a lot of [moreover] garbage can be swept in the big, garbage recovery bag 9 moreover as it is.
[0086]Then, the bag mouth holding fixture (it is hereafter called for short the holding fixture of a 3rd embodiment or a holding fixture.) 1C of the garbage recovery bag in a 3rd embodiment of this invention is explained.
[0087]The perspective view which looked at the holding fixture 1C of a 3rd embodiment with which drawing 9 held the garbage recovery bag from the slanting front, Similarly the side view and the (b) figure which the (a) figure of drawing 10 similarly has in a ground state a front view and the (a) figure of drawing 11, a handle -- a lid -- the supporting structure -- expanding -- being shown -- a portion -- a side view -- said -- (-- b --) -- a figure -- the same -- one side -- a portion -- a sectional view -- drawing 12 -- (-- a --) -- a figure -- the same -- it -- having raised -- a state -- being shown -- a side view -- said -- (-- b --) -- a figure -- the same -- a front view -- being shown -- **** .
[0088]The holding fixture 1C of this 3rd embodiment attaches the lid 10 which opens and closes automatically to the holding fixture 1A of a 1st embodiment mentioned above. For this reason, the explanation which gives identical codes to the part which is common to each part of the holding fixture 1A of a 1st embodiment, and overlaps with it is omitted.
[0089]As shown in each figure of drawing 9 thru/or drawing 11, the lower end part of the handle 3 in the holding fixture 1C of this 3rd embodiment, Have adhered in the center of the upper surface of the support component 11 which has the metal narrow width form of having front view and approximately upside down U form by welding etc., and the lower end part of the right and left of this support component 11, It is pivoted so that this support component 11 may rotate forward and backward via the pins 14 and 14, respectively to the side plate part 2c of the right and left of the main part 2, and 2b.
[0090]And in about five front opening [in the Kamiita part 2a of the main part 2] right and left ends. The pin receptacles 12 and 12 have adhered by welding or a rivet stop, With [the lobes / the lobes 10b and 10b of the back end of the side plate parts 10a and 10a which started and formed the right and left ends of said lid 10 in these pin receptacles 12 and 12 are pivoted via the pins 13 and 13 and] such the supporting structure, It is constituted so that the opening 5 of said main part 2 front of solvent can be made to open and close with the lid 10.

[0091]And in the long hole 11c formed in the approximately center part in the right-and-left-sidewalls part of the pre-support component 11 by meeting up and down, and 11c, Make the pins 13 and 13 made to project from said side plate parts 10a and 10a rush in, and it carries out [stop] of the tip end part of the pins 13 and 13 projected from these long holes 11c and 11c with C ring 15 via the washers 25 and 25, It is constituted so that the pins 13 and 13 may escape from these long holes 11c and 11c and may not separate.
[0092]And in order to establish an interval further between said support component 11 and the side plate parts 10a and 10a of said lid 10, In order to make the portion have carried out insertion support of the short cylinder-shaped spacers 16 and 16 and to provide an interval in it in a similar manner between said support component 11 and the left right side board parts 2c and 2d of said main part 2 in the middle of said pins 13 and 13, The portion is made to carry out insertion support of the short cylinder-shaped spacers 17 and 17 in the middle of said pins 14 and 14.
[0093]Thus, if the support component 11 and the lid 10 which adhered the handle 3 are attached to the main part 2, rotation of the handle 5 which was united with the support component 9 will be attained at a cross direction.
[0094]As it constitutes in this way and is shown in each figure of drawing 9 and drawing 10, when Nagara 5 is uprighted and the main part 2 is put on a ground surface or a floor line, As said pins 13 and 13 make it located in the upper bed in said long hole 11c and 11c, the lid 10 is greatly opened to upper rear and it is further shown in the (a) figure of drawing 12, If it is made for these pins 13 and 13 to move to the lower end part of said long holes 11c and 11c when the lid 10 closes, If the whole holding fixture 1C is raised by the handle 3, by weight balance of the garbage recovery bag 9 or self, it will rotate in the direction which the opening 5 of main part 2 front of solvent turns to up, and this main part 2 will be taken to this motion, and will also close the lid 10 simultaneously.
[0095]If it is made the posture which made it ground so that the opening 5 of main part 2 front of solvent may be ahead suitable, and turned the handle 3 up as shown in each figure of drawing 10, it will take to this motion and the lid 10 will be opened greatly.
[0096]Since the maintenance and the directions for the garbage recovery bag 9 in the holding fixture 1C of a 3rd embodiment that has such composition are the same as that of the case of the holding fixture 1A of a 1st embodiment as shown in drawing 13 and drawing 14, the explanation is omitted.
[0097]Although not illustrated, in order to stabilize rotation by the center of gravity of the main part 2, and its posture, it is desirable to take into consideration the pivoting part of said support component 11 for the rear end part of the main part 2 heavily.
[0098]The bag mouth holding fixture (it is hereafter called for short the holding fixture of a 4th embodiment or a holding fixture.) 1D of the garbage recovery bag in a 4th embodiment of this invention is explained.
[0099]Similarly the perspective view which looked at the holding fixture 1D of a 4th embodiment with which drawing 15 held the garbage recovery bag from the slanting front, the important section perspective view showing the state where drawing 16 similarly held the garbage recovery bag 9, and drawing 17 are side sectional views. The holding fixture 1D of this 4th embodiment is constituted so that the lid 10 may open and close like a 3rd embodiment mentioned above, and for this reason, it is made to omit the overlapping explanation by attaching drawing 9 thru/or each figure and identical codes of drawing 15 about explanation of the opening and closing structure of this lid 10.
[0100]The holding fixture 1D of this 4th embodiment has the feature in the locking structure of the opening 9a of the garbage recovery bag 9. That is, as shown in drawing 15, the crevice 2g which consists of a slot of one sections for inserting in and making it stop from the peripheral edge part 2f concerned where the rubber band 30 is opened and lengthened is formed in the peripheral face near 2 f of the ****** which form the opening 3 of main part 2 front face.
[0101]And where the opening of the opening peripheral edge part 9a which the garbage recovery bag 9 turned up is carried out by the same technique as the case of each embodiment mentioned above,

As it turns up so that an about five opening [of the main part 2] peripheral face may be met, and this turned-up portion is pinched and it is shown in drawing 16 and drawing 17, The rubber band 30 is stopped in said crevice 2g of the main part 2, and the main part 2 is made to stop the part 9a near the bag mouth of the garbage recovery bag 9 with the hauling power of this rubber band 30.
[0102]If constituted in this way, since the position of said crevice 9 does not shift or it does not escape and separate, the rubber band 30 is very effective when the opening 5 of main part 2 front of solvent is formed in the oblique direction.

[Translation done.]

* NOTICES *

JPO and INPIT are not responsible for any
damages caused by the use of this translation.

1.This document has been translated by computer. So the translation may not reflect the original precisely.
2.**** shows the word which can not be translated.
3.In the drawings, any words are not translated.

DESCRIPTION OF DRAWINGS

[Brief Description of the Drawings]
[Drawing 1]In drawing 1, the (a) figure is a perspective view which looked at the holding fixture of the 1st embodiment from the slanting front. In drawing 1, the (b) figure is a perspective view which similarly looked at the important section from back.
[Drawing 2]In drawing 2, the (a) figure is a side view showing the holding fixture of the 1st embodiment. Similarly in drawing 2, the (b) figure is the front view.
[Drawing 3]In drawing 3, the (a) figure is a perspective view showing a process in the holding fixture of the 1st embodiment in the middle of the procedure of making a garbage recovery bag holding. In drawing 3, the (b) figure is a perspective view showing a process in the holding fixture of the 1st embodiment in the middle of next to the procedure of making a garbage recovery bag holding.
[Drawing 4]Drawing 4 is a perspective view showing the state where the garbage recovery bag was made to hold in the holding fixture of the 1st embodiment.
[Drawing 5]Drawing 5 is a side sectional view showing the important section similarly.
[Drawing 6]Drawing 6 is the perspective view which looked at the holding fixture of the 2nd embodiment from the slanting front.
[Drawing 7]In drawing 7, the (a) figure is a perspective view which looked at the locking member which constitutes some holding fixtures of the 2nd embodiment from slanting back. Similarly in drawing 7, the (b) figure is the side sectional view.
[Drawing 8]Drawing 8 is a side sectional view showing the busy condition of the holding fixture of the 2nd embodiment.
[Drawing 9]Drawing 9 is the perspective view which looked at the holding fixture of the 3rd embodiment holding a garbage recovery bag from the slanting front.
[Drawing 10]In drawing 10, the (a) figure is a side view showing the holding fixture of the 3rd embodiment according to a ground state. Similarly in drawing 10, the (b) figure is the front view.
[Drawing 11]In drawing 11, the (a) figure is a partial side view expanding and showing the supporting structure of a handle and a lid similarly. In drawing 11, the (b) figure is an important section sectional view showing the single-sided portion similarly.
[Drawing 12]In drawing 12, the (a) figure is a side view shown by direction of the state where the holding fixture was similarly lifted. Similarly in drawing 12, the (b) figure is the front view.
[Drawing 13]Drawing 13 is a perspective view showing a process in the holding fixture of the 3rd embodiment in the middle of the procedure of making a garbage recovery bag holding.
[Drawing 14]Drawing 14 is a perspective view showing a process in the middle of next to the procedure of making a garbage recovery bag holding.
[Drawing 15]Drawing 15 is the perspective view which looked at the holding fixture of the 4th embodiment holding a garbage recovery bag from the slanting front.
[Drawing 16]Drawing 16 is an important section perspective view showing the state where the garbage recovery bag was similarly held.

[Drawing 17]Similarly drawing 17 is the side sectional view.
[Explanations of letters or numerals]
1A-1D Bag mouth maintenance of the garbage recovery bag concerning this invention
2 Main part
3 Handle
4 Locking member
5 Opening
7 Grip
9 Garbage recovery bag
9a Opening peripheral edge part
10 Bag mouth
30 Rubber band
41 Locking member

[Translation done.]

(19) 대한민국특허청(KR)
(12) 등록실용신안공보(Y1)

(45) 공고일자 2008년01월11일
(11) 등록번호 20-0437964
(24) 등록일자 2008년01월03일

(51) Int. Cl.
A47L 13/52 (2006.01)
(21) 출원번호 20-2007-0002204
(22) 출원일자 2007년02월06일
심사청구일자 2007년02월06일

(73) 실용신안권자
안영남
경남 양산시 교동 494-1
(72) 고안자
안영남
경남 양산시 교동 494-1
(74) 대리인
김영옥

전체 청구항 수 : 총 2 항 심사관 : 박세영

(54) 주머니 부착 쓰레받기

(57) 요 약

본 고안은 쓰레기를 담는 주머니를 쓰레받기에 일체로 부착한 주머니 부착식 쓰레받기를 개량하여 쓰레받기 본체에 주머니포지를 보다 간편한 구조로서 용이하게 부착할 수 있도록 하기 위한 합리적인 구성을 제공코자 한 것이다.

즉, 본 고안은 주머니 쓰레받기 본체(2)에 형성된 개구부(2a) 저면에 삽입홈조(4)가 형성되게 고정돌조(5)를 돌출 형성하고, 삽입홈조(4)에 고정대편(6)을 끼워 넣어 주머니포지(10)의 상단측을 고정하며, 고정대편(6)의 스토퍼돌기(6a)가 삽입홈조(4) 혹은 고정돌조(5)에 형성된 걸림구멍(5a)에 걸림되게 한 주머니 부착 쓰레받기(1)에 있어서,

상기 주머니포지(10)의 상단에는 3가닥의 실로 걸림돌기(11)를 오버록 형성하여 삽입홈조(4)에 끼워진 상태에서 고정대편(6)에 걸림되게 하거나,

상기 주머니포지(10)의 상단에는 삽입실(13)을 봉제선(12)으로 제봉하여 형성하고, 상기 고정대편(6)을 삽입실(14)에 끼워 넣은 상태로 고정대편(6)과 삽입실(12)을 함께 고정돌조(5)의 삽입홈조(4)에 강제 삽입하여 상기 스토퍼돌기(6a)가 걸림구멍(5a)에 걸려서 고정 되도록 한 것으로서, 플라스틱 제품인 고정대편(6)에 주머니포지(10)를 제봉하는 공정이 없어 제품의 생산 능률을 향상시킬 수 있고, 불량 제품의 발생률을 대폭 감소시킬 수 있으며, 주머니포지(10)를 결합한 상태에서의 외관이 미려하면서도 고정대편(6)에 의해 클램핑된 주머니포지(10)가 견고하게 고정할 수 있는 것이다.

대표도 - 도1

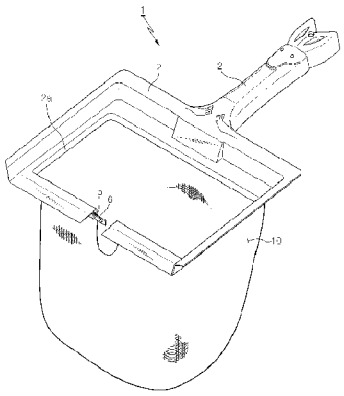

실용신안 등록청구의 범위

청구항 1

주머니 쓰레받기 본체(2)에 형성된 개구부(2a) 저면에 삽입홈조(4)가 형성되게 고정돌조(5)를 돌출 형성하고, 삽입홈조(4)에 고정대편(6)을 끼워 넣어 주머니포지(10)의 상단측을 고정하며, 고정대편(6)의 스토퍼돌기(6a)가 삽입홈조(4) 혹은 고정돌조(5)에 형성된 걸림구멍(5a)에 걸림되게 한 주머니 부착 쓰레받기(1)에 있어서,

상기 주머니포지(10)의 상단에는 3가닥의 실로 걸림돌기(11)를 오버록 형성하여 삽입홈조(4)에 끼워진 상태에서 고정대편(6)에 걸림되게 한 것을 특징으로 하는 주머니 부착 쓰레받기.

청구항 2

제 1항에 있어서,

상기 주머니포지(10)의 상단에는 삽입실(13)을 봉제선(12)으로 재봉하여 형성하고, 상기 고정대편(6)을 삽입실(14)에 끼워 넣은 상태로 고정대편(6)과 삽입실(12)을 함께 고정돌조(5)의 삽입홈조(4)에 강제 삽입하여 상기 스토퍼돌기(6a)가 걸림구멍(5a)에 걸려서 고정 되도록 한 것을 특징으로 하는 주머니 부착 쓰레받기.

명 세 서

고안의 상세한 설명

고안의 목적

고안이 속하는 기술 및 그 분야의 종래기술

<17> 본 고안은 쓰레기를 담는 주머니를 쓰레받기에 일체로 부착한 주머니 부착식 쓰레받기에 관한 것으로서, 본 고안의 특징은 본인이 선 등록 받은 주머니 부착식 쓰레받기의 구성을 더욱 개량하여 쓰레받기 본체에 주머니포지를 보다 간편한 구조로서 용이하게 부착할 수 있도록 하기 위한 합리적인 구성을 제공코자 한 것이다.

<18> 포지를 이용한 주머니를 쓰레받기에 일체형으로 부착할 경우 쓰레기를 쓸어 담기가 용이하고, 내장된 쓰레기를 일시적으로 보관할 수도 있는 편리한 기능을 제공하는 것으로서, 이러한 쓰레받기는 본 출원인이 앞서 개발하여 한국 실용신안등록 제0306459로 등록한바 있다.

<19> 그러나 상기 선 개발된 주머니 쓰레받기 고안은 쓰레기 수납 주머니가 부착되는 고정수단이 주머니포지와는 별개의 구성으로 되어 있다.

<20> 즉, 주머니 쓰레받기 본체에 형성된 개구부 저면에 삽입홈조가 형성되게 고정돌조를 돌출 형성하고, 삽입홈조에는 고정돌조에 형성된 걸림구멍에 걸림되는 고정대편을 끼워서 고정되게 하며, 고정대편과 주머니포지의 상단을 재봉하여 상호 일체화 되게 한 구성이다.

<21> 그러나 상기한 바와 같이 주머니포지를 고정대편에 재봉하여 고정할 경우 재봉부가 밖으로 노출되어 외관미가 좋지 않고, 연결부가 손상되기 쉬우며, 제조공정 또한 비능률적이고 양산성을 기하기 어려운 단점이 있었다.

고안이 이루고자 하는 기술적 과제

<22> 본 고안은 상기한 선 등록 고안의 문제점을 개선하여 주머니포지가 연결되는 고정 수단을 밖에서는 보이지 않도록 주머니포지의 상단 가장자리를 매입 고정하여 쓰레받기 본체와 결합되게 하면서도 주머니포지의 결합상태가 견고하고 연결부의 마무리 상태가 외관상 아주 미려하도록 함에 고안의 기술적 과제를 두고 본 고안을 완성한 것으로서, 이하에서 본 고안의 구성을 설명한다.

고안의 구성 및 작용

<23> 본 고안에서 제공하는 주머니 부착 쓰레받기는 손잡이를 갖는 쓰레받기 본체에 형성된 개구부의 저면 가장자리에는 형성되어 있는 걸림홈에 주머니포지의 상단에 형성된 고정부를 내입하여 고정대편으로 고정되게 한 것으로서, 다양한 실시예로 구성될 수 있는 것이다.

<24> 도 1은 본 고안의 제1실시예가 적용된 주머니 부착 쓰레받기 사시도를 도시한 것이고, 도 2는 본 고안 제1실시

예의 요부 확대 분해 사시도를 도시한 것이며, 도 3은 본 고안의 조립상태 단면도를 도시한 것이다.

<25> 도시된 바와 같이 본 고안에서 제공하는 주머니 부착 쓰레받기(1)는 손잡이(3)를 갖는 쓰레받기 본체(2)에 형성된 개구부(2a)의 저면 가장자리에는 개구부(2a)와 직각방향으로 개방되는 삽입홈조(4)가 형성되게 고정돌조(5)를 돌출되게 형성한다.

<26> 상기 삽입홈조(4)에는 주머니포지(10)의 상단과 함께 고정대편(6)을 끼워서 고정하되, 고정대편(6)에는 일측에 수개의 스토퍼돌기(6a)를 형성하고, 고정돌조(5)에는 스토퍼돌기(6a)가 끼워지는 걸림구멍(5a)을 형성하여 고정대편(6)이 고정되게 한다.

<27> 상기 고정대편(6)과 함께 삽입홈조(4)에 끼워지는 주머니포지(10)의 상단에는 3가닥의 실로 걸림돌기(11)를 오버록 형성하여 삽입홈조(4)에 끼워지는 고정대편(6)에 걸림되게 한 구성이다.

<28> 도 4, 도 5는 본 고안의 제 2실시예가 적용된 주머니 부착 쓰레받기의 요부 확대 분해 사시도 및 조립상태 단면도를 도시한 것으로서, 이는 개구부(2a)의 저면 가장자리에 개구부(2a)와 평형한 방향으로 개방된 삽입홈조(4)를 형성하여 주머니포지(6)의 상단과 함께 고정대편(6)을 끼워서 고정되게 한 구성이다.

<29> 도 6, 도 7은 본 고안의 제 3실시예가 적용된 주머니 부착 쓰레받기의 요부 확대 분해 사시도 및 조립상태 단면도를 도시한 것으로서, 이는 상기 제 2실시예를 구성함에 있어서, 주머니포지(10)의 상부측을 이중으로 접어서 봉제선(12)으로 재봉하여 삽입실(13)을 형성하고, 이 삽입실(13) 내측에 스토퍼돌기(6a)가 형성된 고정대편(6)을 끼워 넣은 상태에서 고정대편(6)을 개구부(2a)의 저면 가장자리에 형성된 삽입홈조(4)에 끼워 스토퍼돌기(6a)가 고정돌조(5)에 형성된 걸림구멍(5a)에 걸림되면서 고정되게 한 구성이다.

<30> 도면 중 미 설명 부호 7은 고정대편(6)의 상부에 일정간격으로 형성한 고정요철돌기부이다.

<31> 이상과 같이 구성된 본 고안은 종래 선행기술의 경우 도 8과 같이 고정대편(6)의 하측에 주머니포지(10)의 상단이 노출상태로 접착 또는 재봉되어 이음부가 밖으로 노출되어 미관이 불량하고 사용 시 이음부의 훼손이 잦아 내구성이 취약한 단점이 있었으나, 본 고안은 주머니포지(10)의 상단부에 걸림돌기(11)가 오버록 형성되어 있으므로 주머니포지(10) 상단부를 고정대편(6)과 함께 쓰레받기 본체(2)의 개구부(2a)의 하측 가장자리에 형성된 삽입홈조(4)에 끼우면 고정대편(6)에 형성되는 스토퍼돌기(6a)가 고정돌조(5)에 형성된 걸림구멍(5a)에 끼워져 걸림 고정되며, 또한 도 3, 4실시예와 같이 구성할 경우 고정대편(6)을 주머니포지(10)의 상단측에 형성된 삽입실(13)의 내측에 삽입한 상태에서 고정대편(6)을 고정돌조(5)에 의해 형성된 삽입홈조(4)에 끼우면 삽입실(13)에 내입되어 있는 고정대편(6)에 형성된 스토퍼돌기(6a)가 고정돌조(5)에 형성된 걸림구멍(5a)에 끼워져 걸림 고정되는 것이다.

<32> 그리고 고정대편(6)의 상부에 일정간격으로 형성된 요철 돌기부(7)는 주머니포지(10)의 삽입실(13)이 전체적으로 고정돌조(5)측의 삽입홈조(4) 상측에 밀착되도록 도와주는 보강 역할을 하여 삽입실(13) 전체의 결합 상태가 견고하고 안정감을 제공하게 되는 것이다.

고안의 효과

<33> 이상에서 설명한 바와 같이 본 고안의 주머니 부착 쓰레받기(1)는 주머니포지(10)의 상단부에 걸림돌기(11)를 오버록 형성하거나 혹은 고정대편(6)을 삽입할 수 있는 삽입실(13)을 형성한 것으로서, 본 고안에 의하면 플라스틱 제품인 고정대편(6)에 주머니포지(10)를 재봉하는 공정이 없어 제품의 생산 능률을 향상시킬 수 있고, 불량 제품의 발생률을 대폭 감소시킬 수 있으며, 주머니포지(10)를 결합한 상태에서의 외관이 미려하면서도 고정대편(6)에 의해 클램핑된 주머니포지(10)가 견고하게 고정되므로 내구성 향상에도 일조할 수 있는 등 기대되는 효과가 다대한 매우 유용한 고안이다.

도면의 간단한 설명

<1> 도 1은 본 고안의 제1실시예가 적용된 주머니 부착 쓰레받기 사시도

<2> 도 2는 본 고안 제1실시예의 요부 확대 분해 사시도

<3> 도 3은 본 고안의 조립상태 단면도

<4> 도 4는 본 고안의 제2실시예가 적용된 주머니 부착 쓰레받기의 요부 확대 분해 사시도

<5> 도 5는 도 4의 조립상태 단면도

<6> 도 6은 본 고안의 제3실시예가 적용된 주머니 부착 쓰레받기의 요부 확대 분해 사시도

<7> 도 7은 도 6의 조립상태 단면도

<8> 도 8은 본 고안의 사용상태도

<9> ◀ 도면의 주요부분에 사용된 부호의 설명 ▶

<10> 1:주머니 부착 쓰레받기 2:쓰레받기 본체

<11> 2a:개구부 3:손잡이

<12> 4:삽입홈조 5:고정돌조

<13> 5a:걸림구멍 6:고정대편

<14> 6a:스토퍼돌기 10:주머니포지

<15> 11:걸림돌기 12:봉제선

<16> 13:삽입실

도면

도면1

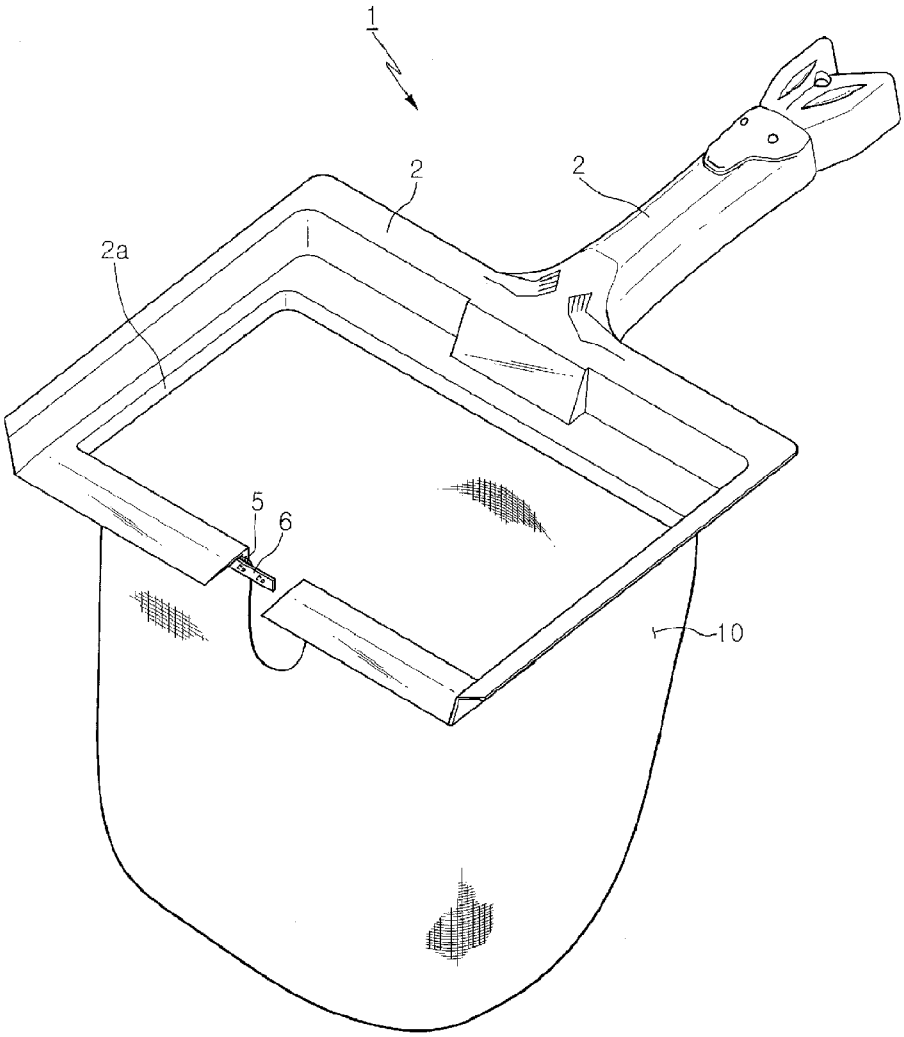

도면2

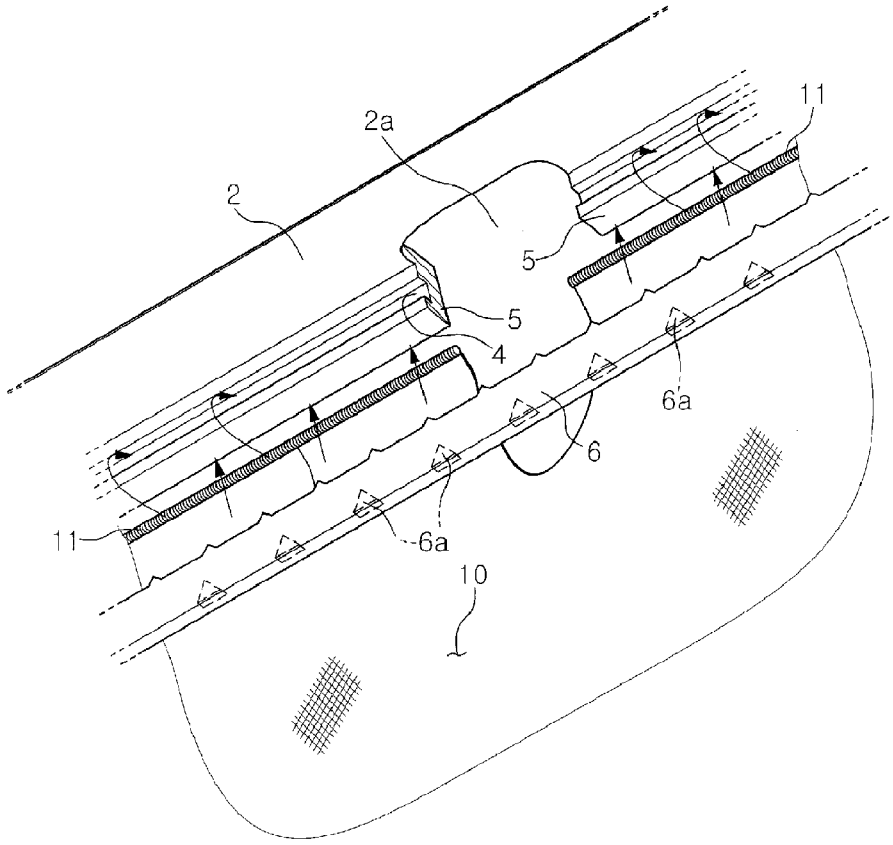

도면3

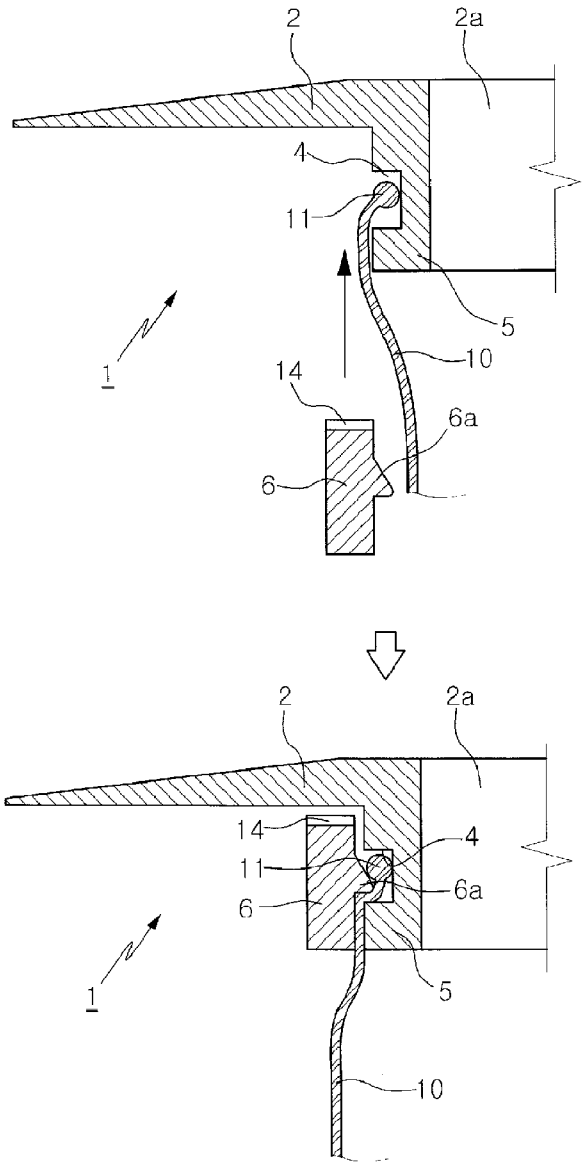

도면4

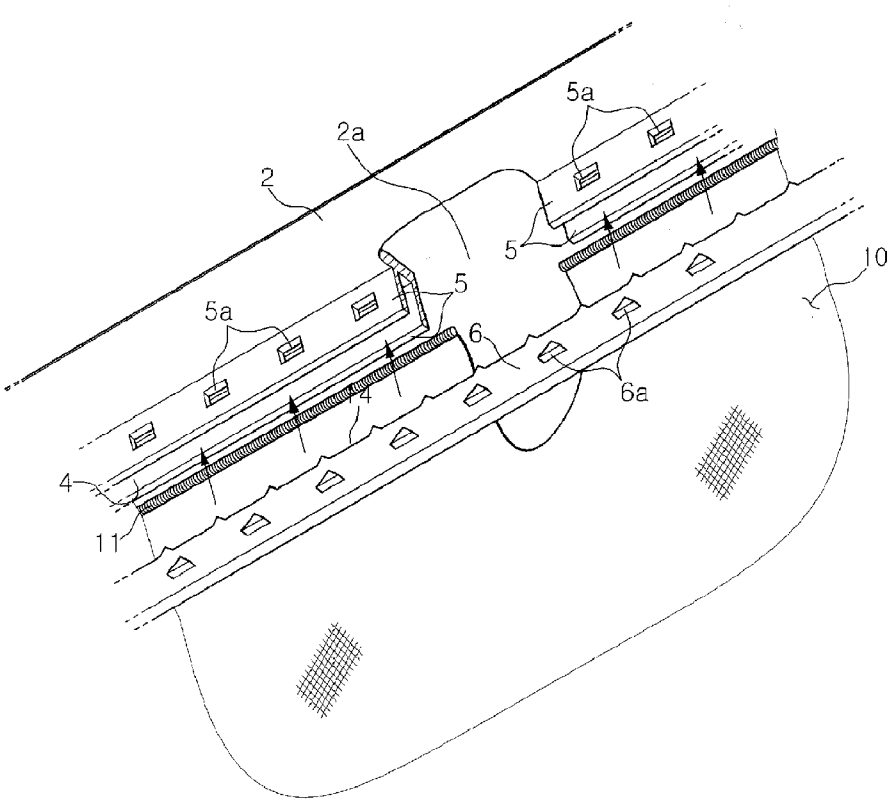

도면5

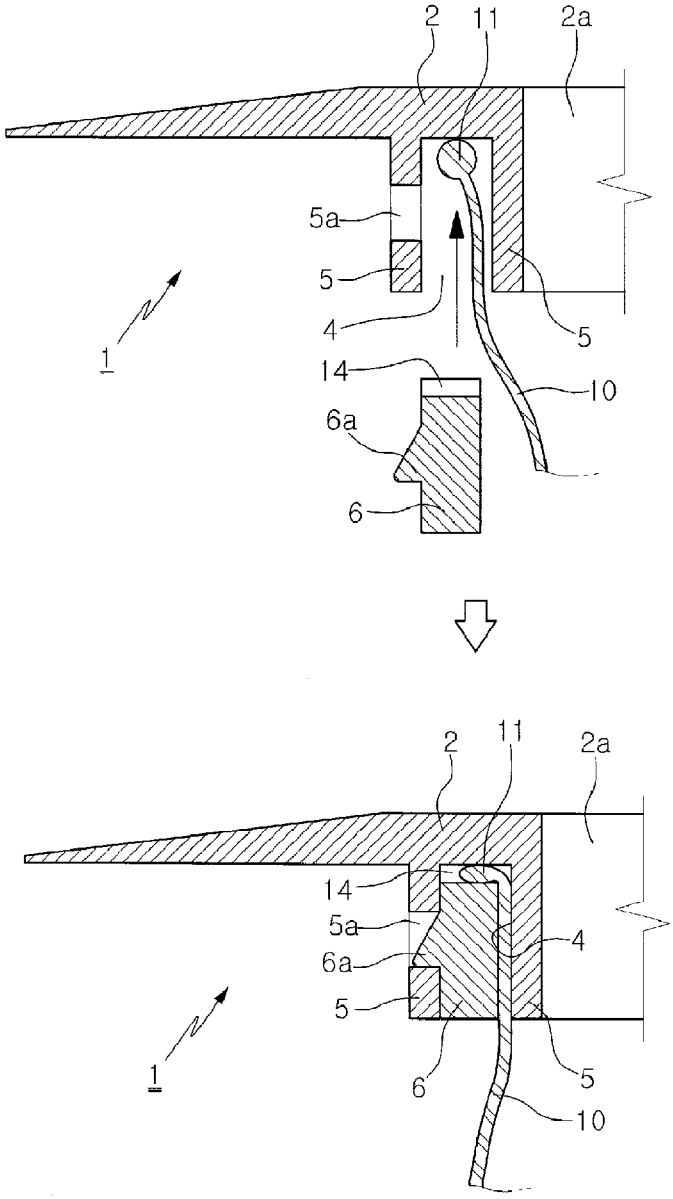

도면6

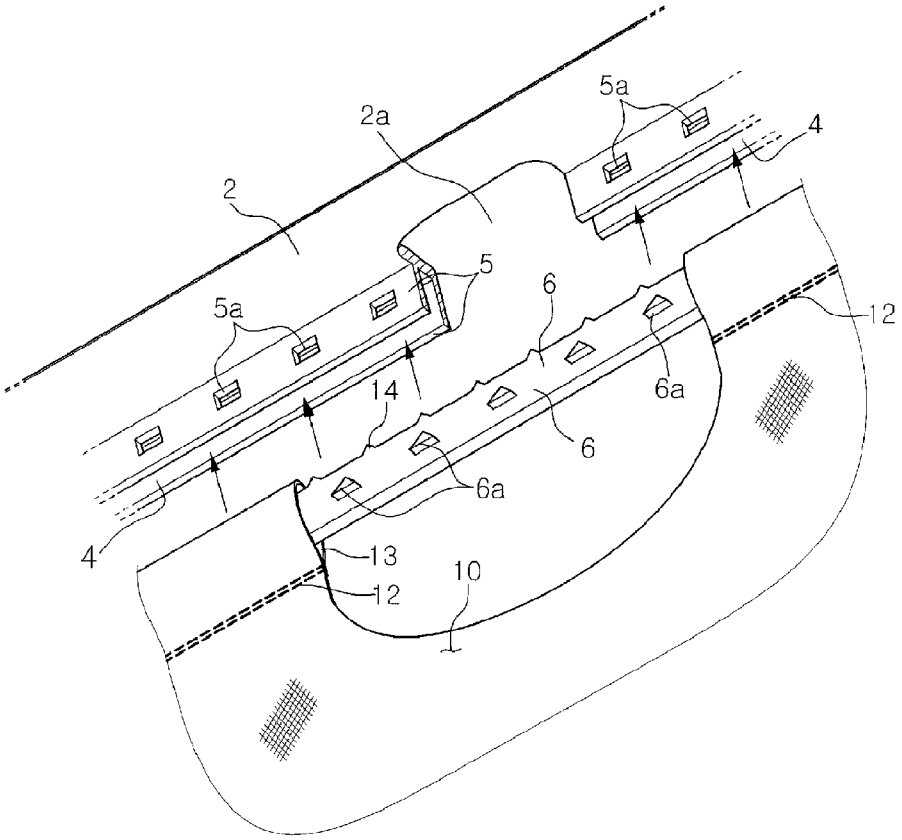

도면7

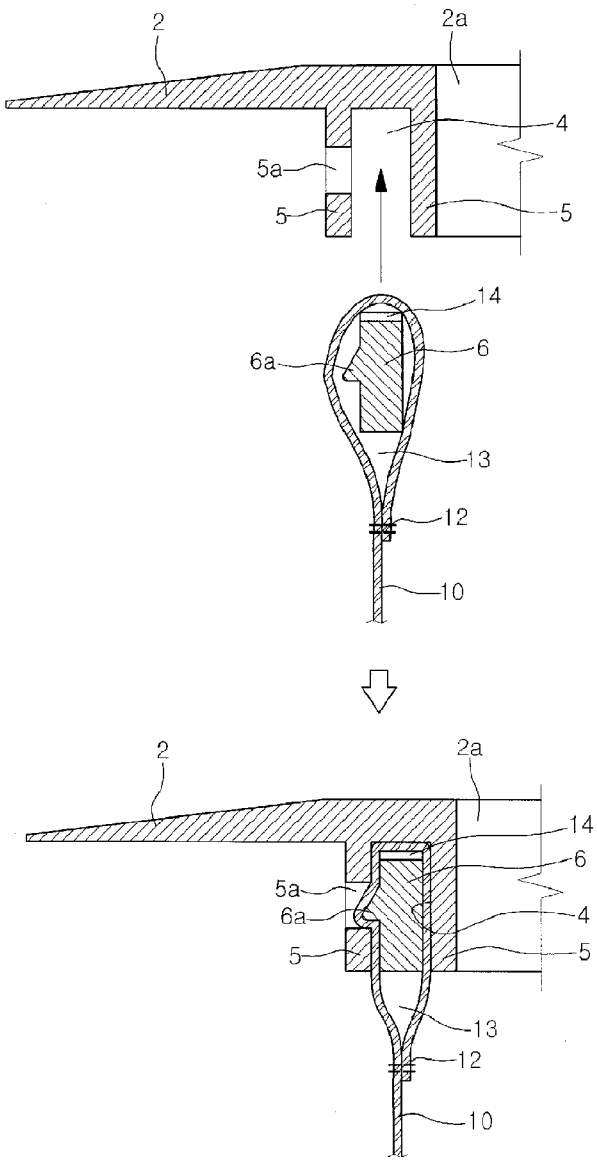

도면8

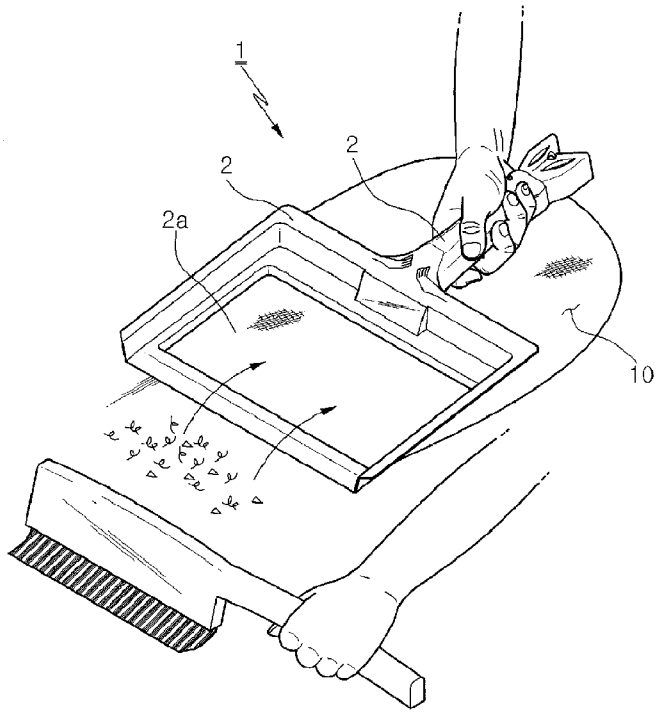

(19) 대한민국특허청(KR)
(12) 등록실용신안공보(Y1)

(51)Int. Cl.[7]
B65F 1/14

(45) 공고일자 2000년07월15일
(11) 등록번호 20-0187935
(24) 등록일자 2000년04월22일

(21) 출원번호	20-2000-0003728(이중출원)	(65) 공개번호	
(22) 출원일자	2000년02월12일	(43) 공개일자	
(62) 원출원	특허 특2000-0006605 원출원일자 : 2000년02월12일 심사청구일자 2000년02월12일		
(73) 실용신안권자	문수진 서울특별시 용산구 이촌동 반포아파트 1동 307호		
(72) 고안자	문수진 서울특별시 용산구 이촌동 반포아파트 1동 307호		
(74) 대리인	임희택, 김영철		

심사관 : 남석우

(54) 개폐기구가 구비된 오물수거용 포대

요약

본 고안은 개폐기구가 구비된 오물수거용 포대에 관한 것으로, 오물을 담을 수 있는 수거부(10)와, 이 수거부(10)의 상부 입구에 부착되는 개폐부(20)로 구성되어 있고, 상기 개폐부(20)는 양쪽 2개의 개방가능한 입구부재(30)(40)로 이루어지되, 이 부재(30)(40)에 각각 절취선(31)(41)이 형성되고, 이 절취선(31)(41)을 경계로 하부는 부착판(32)(42)이 형성되고, 상기 절취선(31)(41)의 상부에는 분리가능한 분리판(33)(43)으로 구성되어 있으며, 수거부(10)의 상부 입구부 외면 어느 한면에도 접착부(60)를 형성하여 포대에 각종 오물을 담은 후 최종적으로 밀봉할 수 있도록 되어 있는 것으로, 간편하게 휴대하면서 각종 오물을 수거하여 처리할 수 있어 환경오염을 방지할 수 있는 등의 큰 효과가 있도록 한 것이다.

명세서

도면의 간단한 설명

도 1은 본 고안의 일실시예를 나타낸 분리사시도

도 2는 본 고안의 분리판이 분리된 상태를 나타낸 일부 분리사시도

도 3은 본 고안의 다른 실시예를 나타낸 분리사시도

도 4a는 본 고안의 다른 형태의 분리판을 도시한 정면도

도 4b는 본 고안의 또 다른 형태의 분리판을 도시한 정면도

도 5는 본 고안의 다른 형태의 분리판을 반으로 접은 상태를 나타낸 정면도

도 6은 본 고안의 포대에 배설물을 담은 후 한번 접은 상태를 나타낸 사용상태도

* 도면의 주요부분에 대한 부호설명 *

10 : 수거부

20 : 개폐부

30,40 : 입구부재

31,41 : 절취선

32,42 : 부착판

33,43 : 분리판

33a,43a : 절취선

33b,43b : 경사면

50,60 : 접착부

고안의 상세한 설명

고안의 목적

고안이 속하는 기술분야 및 그 분야의 종래기술

본 고안은 개폐기구가 구비된 오물수거용 포대에 관한 것으로, 더욱 상세하게는 간편하게 휴대하면서 각종 오물을 용이하게 수거하여 처리할 수 있도록 분리사용이 가능한 개폐기구가 구비된 오물수거용 포대에 관한 것이다.

일반적으로, 각종 오물(예컨데, 각종 쓰레기, 애완동물의 배설물 등)이 길거리등에 그냥 버려져 거리가 지저분해지고, 환경오염등의 문제가 있으며, 특히 현대생활에서는 애완동물(개, 고양이 등)들을 많이 기르기 때문에 애완동물 주인이 산책등을 하기 위해 애완동물을 데리고 나가는 경우가 빈번하다. 그런데, 애완동물중 가장 많이 기르는 동물인 애완견을 예를 들어 설명하면, 애완견을 데리고 산책을 하는 도중에 애완견이 생리적 현상에 의해 배설물을 배출하는 경우가 많다. 이런 경우 애완견의 주인은 배출된 배설물을 그대로 방치하고 지나가 버리는 경우가 허다하다. 배설물 자체가 더럽고, 별다른 수거도구가 없는 경우가 많아 취급이 불편하여 그냥 지나쳐 버리는 것이다. 이런 경우에 타인이 이 길을 지나갈때에는 항상 애완견의 배설물들이 여러 곳에 보이게 되어 불쾌감을 주고, 자칫 배설물을 발로 밟는 경우도 있었다.

또한, 간혹 합성수지재봉투를 들고 다니면서 애완견이 배출한 배설물을 싸서 쓰레기통에 버리는 사람들도 있지만, 이 또한, 배설물을 합성수지재봉투안에 넣기 위해서는 별도의 도구가 필요하며, 손에 봉투를 씌우고 배설물을 잡는 경우, 불쾌한 냄새를 맡게될 뿐만 아니라 손으로 배설물을 잡을 때의 불쾌한 느낌을 가질수 밖에 없었다. 이러한 이유로, 애완견의 배설물 처리가 기피되어 왔다.

따라서, 상기 예를들어 설명한 배설물을 수거할 만한 별다른 도구등을 휴대하기 어렵고, 휴대할 수 있더라도 처리작업이 매우 불편한 등의 문제점이 있었다.

따라서, 비단 애완견의 배설물 뿐만 아니라, 길거리에 나뒹구는 오물들도 손쉽게 수거하여 처분할 수 있으며 휴대가 간편한 도구의 개발이 요망되어 왔다.

고안이 이루고자 하는 기술적 과제

이에 본 고안은 상기와 같은 종래의 제반 문제점을 감안하여 안출된 것으로, 각종 오물을 매우 간편하게 처리할 수 있는 개폐기구가 구비된 오물수거용 포대를 제공함에 고안의 목적이 있다.

고안의 구성 및 작용

상기와 같은 목적을 달성하기 위한 본 고안의 오물수거용 포대는, 오물을 담을 수 있는 수거부와, 상기 수거부의 상부 입구에 부착되는 개폐부로 구성된 것을 기술적 특징으로 한다.

상기 개폐부는 양쪽 2개의 개방가능한 입구부재로 이루어지되, 이 입구부재에 절취선이 형성되고, 이 절취선을 경계로 하부는 수거부의 상부 입구부에 부착고정되도록 하는 부착판이 형성되고, 상기 절취선의 상부에는 오물을 쓸어담을 수 있도록 분리기능한 분리판으로 구성된 것을 특징으로 한다.

또한, 상기 개폐부의 부착판을 수거부의 입구부에 부착 고정할 때에는 양면 테이프, 접착제등을 이용하여 수거부의 입구 안쪽 또는 외면에 부착 고정할 수 있고, 부착판의 어느 일면 또는 수거부의 입구 외면 어느 한쪽에 양면테이프 또는 접착제등을 도포하여 포대에 각종 오물을 담은 후 최종적으로 밀봉할 수 있도록 되어 있다.

또한, 본 고안의 오물수거용 포대는, 상기 분리판의 양단에 절취선을 형성하거나 또는 모두 따내어 경사면을 형성하도록 구성할 수있으며, 이러한 구성에 의면, 분리판을 접어서 사용할 때, 지면에 닿는 면적을 넓게 할 수 있다는 장점이 있다.

이하 본 고안의 바람직한 실시예를 첨부된 예시도면에 의거하여 상세히 설명한다.

도 1은 본 고안에 따른 일실시예를 나타낸 분리사시도이고, 도 2는 도 1의 결합사시도이다.

도 1 및 도 2에 도시된 바와 같이, 본 고안에 따른 오물수거용 포대는, 오물을 담을 수 있는 수거부(10)와, 상기 수거부(10)의 상부 입구에 부착되어 오물을 용이하게 수거부(10)로 투입될 수 있도록 하는 개폐부(20)로 구성되어 있다.

상기 수거부(10)는 합성수지재 또는 종이재의 봉투로 제조되며, 이 외에도 오물을 담을 수 있는 봉투형태의 모든 재질이 사용가능하다. 자연분해가 가능한 합성수지재의 봉투를 이용하여 수거부(10)를 구성하면, 수거된 오물과 함께 포대를 폐기할 수 있어 사용이 더욱 편리해지며, 환경친화적이 된다.

상기 개폐부(20)는 양쪽 2개의 개방가능한 입구부재(30)(40)로 이루어진다. 상기 입구부재(30)(40)에는 절취선(31)(41)이 형성되어 있어, 이 절취선(31)(41)을 경계로 하부는 부착판(32)(42)을 구성하며, 상기 절취선(31)(41)의 상부는 분리가능한 분리판(33)(43)을 구성한다.

후술하는 바와 같이, 입구부재(30)(40)의 일측에서 분리된 분리판(33)(43)은, 오물을 밀어거나 집어서 수거부(10)로 투입하는 기구로서 사용되며, 분리되지 아니한 분리판(33)(43)은 오물이 용이하게 수거부(10)로 투입될 수 있도록 마치 쓰레받기와 같은 기능을 하게 된다. 이에 대해서는 본 고안의 사용방법을 설명하면서 더욱 상세히 설명한다.

첨부된 예시도면의 실시예에서 상기 개폐부(20)가 골판지로 구성되어 있으나, 개폐부(20)의 재질은 이에 한정되지 않으며, 상기 개폐부(20)는 일반적인 종이재 또는 합성수지재로 제조될 수 있다.

또한, 상기 개폐부(20)의 부착판(22)(32)을 수거부(10)의 입구부에 부착 고정하는 방식으로는, 양면 테이프(50)를 이용하여 수거부(10)의 입구 안쪽 또는 외면에 부착고정할 수 있고, 양면 테이프 대신 적절한 접착제를 도포하여 개폐부(20)를 수거부(10)의 입구에 부착 고정할 수 있다.

상기 개폐부(20)의 부착판 어느 일면 또는 수거부(10)의 입구부 일면에 접착부(60)를 형성하면, 포대에 각종 오물을 담은 후 개폐부(20)를 말을 때 부착부(60)의 접착력에 의하여 개폐부(20)와 수거부(10)가 접착되어 수거부(10)를 최종적으로 밀봉할 수 있게 된다.

상기 절취선(31)(41)은 부재(30)(40) 전부 또는 어느 하나에 형성할 수 있다.

또한, 본 고안의 또다른 실시예로서, 분리된 분리판(33)(43)을 반으로 접었을 때, 도 5의 형상과 같이 될 수 있도록 하기 위하여, 상기 분리판(33)(43)의 양단 모서리를 절취하였을 때 분리판(33)(43)의 형상이 평행사변형이 될 수 있도록 상기 분리판(33)(43)의 양단 모서리에 경사진 절취선(33a)(43a)을 형성할 수 있으며, 절취선(33a)(43a)을 형성하는 대신에 미리 모서리를 절취하여 경사면(33b)(43b)를 형성할 수도 있다.

도면중 미설명부호 70은 애완동물의 배설물이다.

다음에서는 이와 같이 구성된 본 고안에 따른 포대의 사용방법을 설명한다. 설명의 편의을 위하여 수거부가 합성수지재봉투로 구성된 실시예를 들어 설명하나,앞서 명시한 바와 같이, 이는 본 고안의 일 실시예일 뿐이며, 본 고안의 수거부는 합성수지재봉투에 한정되지 아니한다.

본 고안의 포대는 개폐부를 제외한 수거부가 용이하게 접혀질 수 있는 재질로 구성되므로, 평소에는 본 고안에 따른 포대를 접어서 휴대하고 있다가, 필요한 경우, 예를 들면, 애완견을 데리고 다니다가 배설물이 발생한 경우, 개폐부(20)의 입구부재(30)(40)에 형성된 절취선(31)(41)중 어느 한쪽을 따라 분리판(33)(43)을 뜯어내어 분리판을 분리한다.

도 2에서는 부재번호 33으로 표시된 분리판(33)이 분리된 형상을 도시하였다. 도 2에 도시된 바와 같이, 포대의 입구부재 중 분리판을 분리하지 않은 측면의 입구부재를 해당 지면에 대고, 수거부(10)의 입구부를 개방한 다음, 분리한 분리판(33)을 이용하여 배설물(70)을 쓸어담으면 된다.

일반적인 봉투를 이용하여 애완견의 배설물과 같은 오물을 담는 경우에는, 봉투의 입구가 지면에 잘 밀착되지 않아 배설물을 담기가 매우 어려웠으나, 본 고안에서는, 종이재 또는 합성수지재로 이루어진 개폐부(20)가 구비되어 있고, 분리되지 않은 입구부재는 소정 강성을 갖게 되므로, 분리되지 않은 입구부재는 마치 쓰레받기처럼 지면에 밀착할 수 있으며, 그에 따라 배설물을 용이하게 수거부(10)로 담을 수 있게 된다.

한편, 분리한 분리판(33)을 이용하여 배설물(70)을 봉투에 밀어 넣어 담을 수 있으므로, 애완견의 배설물을 만지므로써 생기는 불쾌감도 없앨수 있다.

한편, 상기 분리판(33)(43)은 도 4a 또는 도 4b에 도시된 바와 같이, 분리판(33)(43)의 양쪽에 절취선(33a)(43a) 또는 경사면(33b)(43b)를 형성할 수 있는바, 이는 도 5에 도시된 바와 같이, 이러한 분리판(33) 또는 분리판(43)을 반으로 접어서 앞으로 벌리면 분리판의 하단부가 일직선이 되면서 그 길이가 연장되어 배설물 등을 담을때 보다 연장된 길이로 인해 일시에 많은 양을 담을 수 있다.

물론, 상기와 같이 하지 않고 비로 반으로 접은 후 길이가 긴쪽을 이용하여 수거부(10)안으로 담아도 무방하다.

만일, 오물(70)이 묽은 경우에는 주변의 흙이나 휴지등을 사용하여 오물과 함께 담으면 된다. 또한, 상기 개폐부(20)는 수거부(10)와 일체로 부착한 상태에서 휴대하여 사용할 수도 있다.

위의 설명에서는 애완동물의 배설물을 예로 들어 설명하였으나, 본 고안은 상기 애완동물의 배설물 이외에도 각종 휴지나 쓰레기등의 일반적인 오물도 간편하게 수거하여 폐기할 수 있다.

고안의 효과

이와 같이 본 고안은 간편하게 휴대하면서 각종 오물을 수거하여 처리할 수 있어 환경오염을 방지할 수 있는 등의 큰 효과가 있는 것이다.

본 고안은 편의상 상기 첨부도면을 통해 설명하였으나, 이에 국한되지 않고 본 고안의 기술범주내에서 여러가지 변형 및 수정이 가능함은 물론이다.

(57) 청구의 범위

청구항 1

오물수거용 포대에 있어서,

오물을 담을 수 있는 수거부와,

이 수거부의 상부 입구에 부착되는 개폐부로 구성되어 있는 것을 특징으로 하는 개폐기구가 구비된 오물수거용 포대.

청구항 2

제 1항에 있어서,

상기 개폐부는 양쪽 2개의 개방가능한 입구부재로 이루어지되, 이 입구부재에 절취선이 형성되고, 이 절취선을 경계로 하부는 부착판을 구성하며 상기 절취선의 상부는 분리가능한 분리판을 구성하는 것을 특징으로 하는 개폐기구가 구비된 오물수거용 포대.

청구항 3

제 3항에 있어서,

상기 입구부재에 형성된 절취선은 입구부재 전부 또는 어느 하나에 형성가능한 것을 특징으로 하는 개폐기구가 구비된 오물수거용 포대.

청구항 4

제 1항에 있어서,

상기 수거부의 입구부 외면 어느 한면에 접작부를 형성하여, 오물 수거후 개폐부를 접을 때 상기 접작부와 수거부의 외면이 접촉하므로써 수거부를 밀봉할 수 있도록 구성되어 있는 것을 특징으로 하는 개폐기구가 구비된 오물수거용 포대.

청구항 5

제 2항에 있어서,

상기 분리판을 분리하여 접었을 때 하부면이 일직선을 이룰 수 있도록, 상기 분리판의 양단 모서리에 경사진 절취선이 형성되어 있는 것을 특징으로 하는 개폐기구가 구비된 오물수거용 포대.

도면

도면1

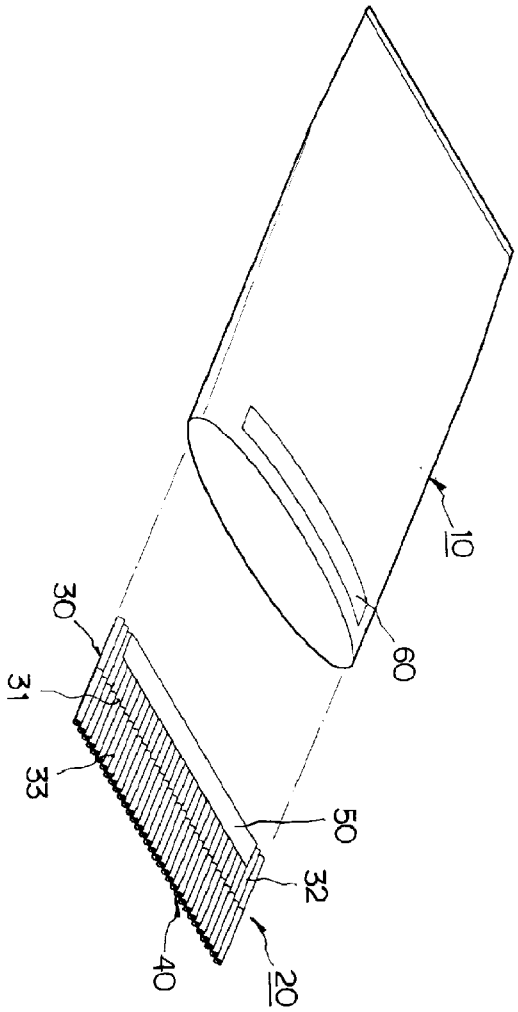

도면2

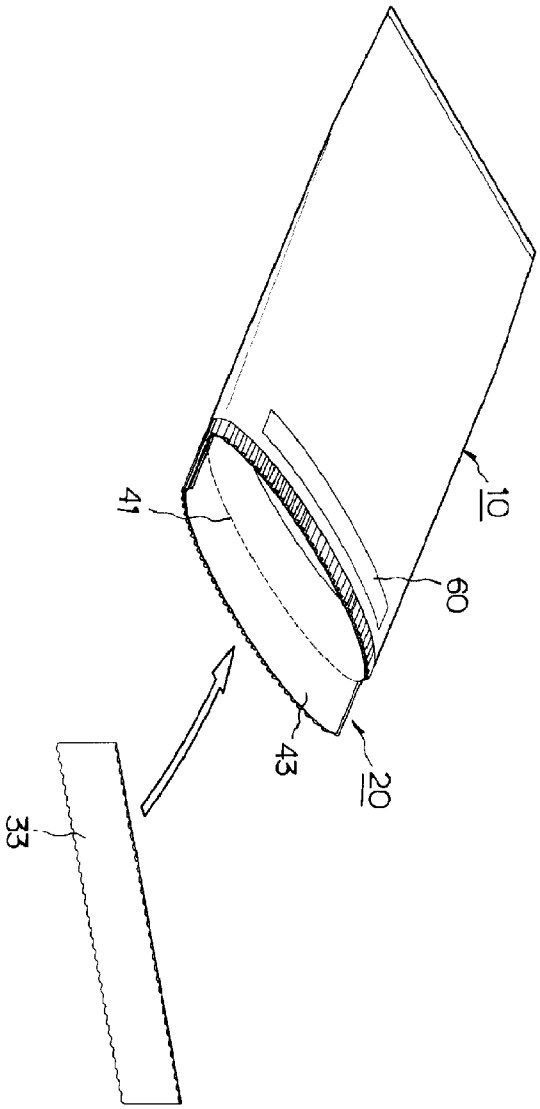

도면3

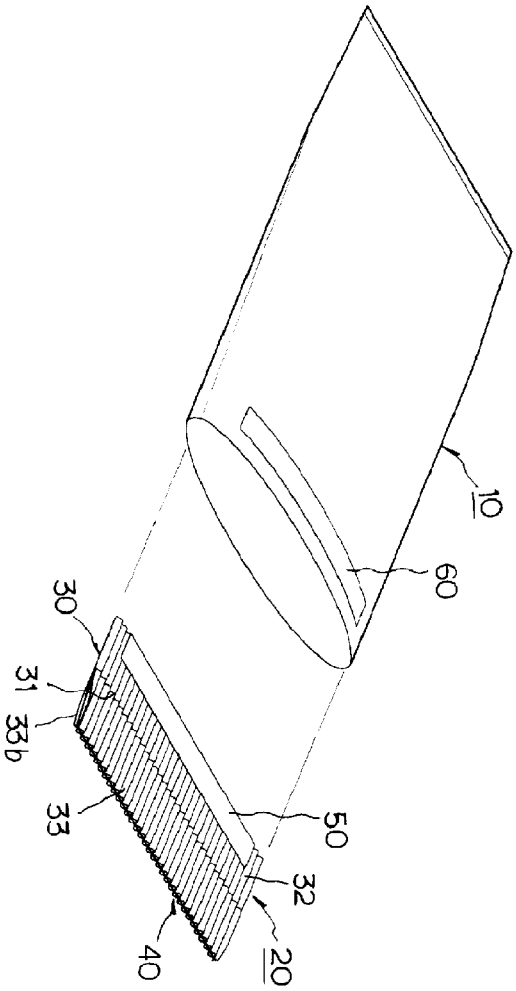

도면4a

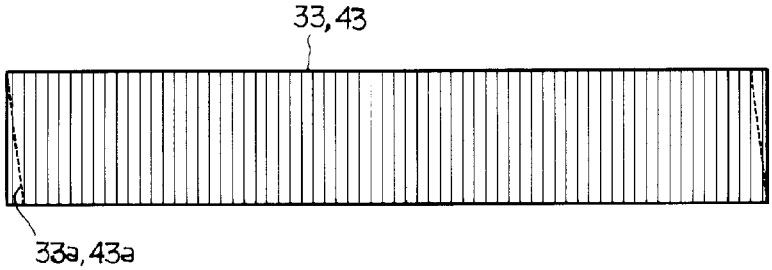

図46

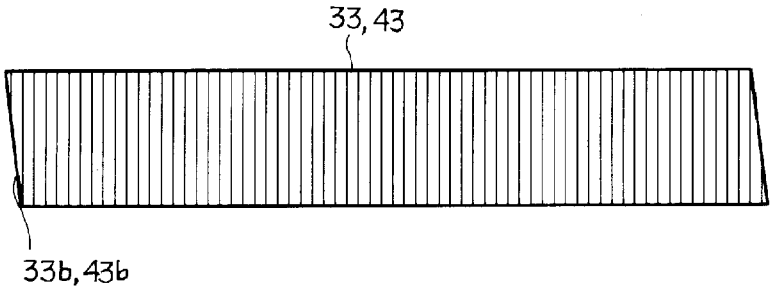

図46

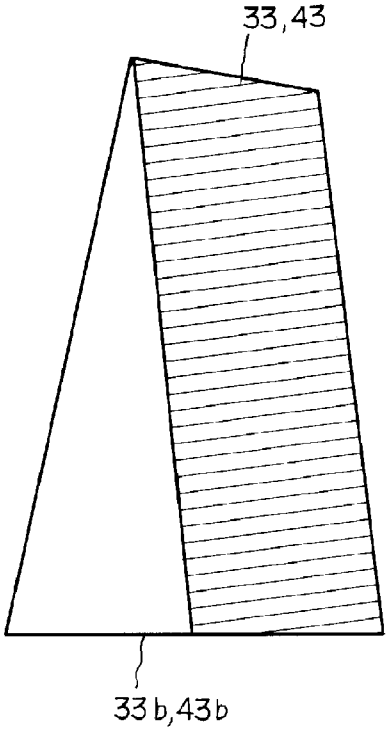

도면6

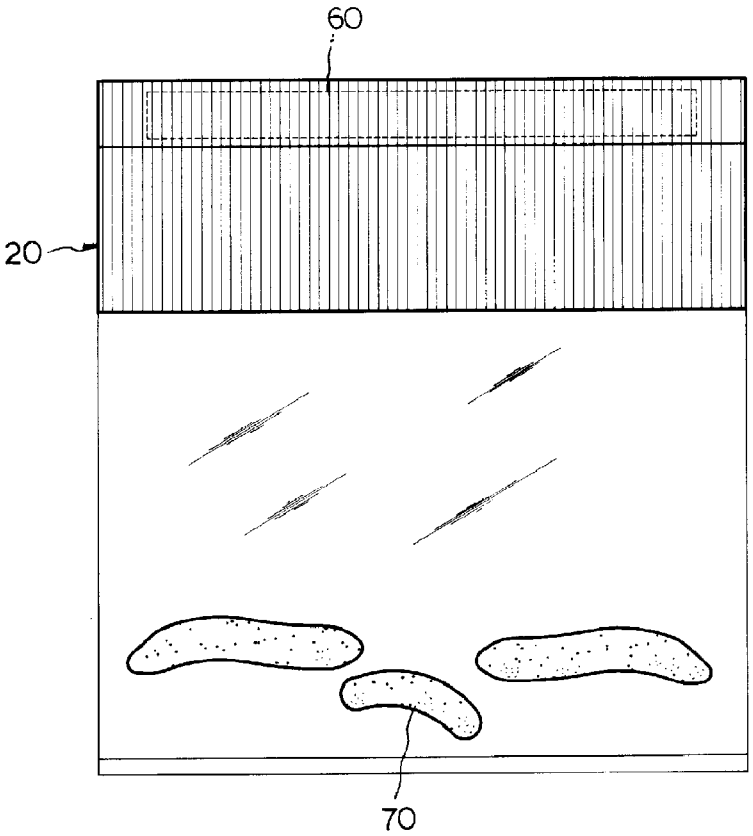

A PACKING DEVICE FOR EXCREMENT AND TRASH COLLECTION HAVING OPENING AND CLOSING UNIT

Patent number: KR200187935 (Y1)
Publication date: 2000-07-15
Inventor(s): MOON SU JIN [KR] +
Applicant(s): MOON SU JIN [KR] +
Classification:
- international: ***B65F1/14;*** **B65F1/14;** (IPC1-7): B65F1/14
- european:
Application number: KR20000003728U 20000212
Priority number(s): KR20000006605 20000212

Also published as:
KR20010083380 (A)

Abstract not available for KR 200187935 (Y1)
Abstract of correspondent: **KR 20010083380 (A)**

PURPOSE: A contaminant collecting bag having an opening unit is provided to collect and treat waste with a portable bag, and to prevent environmental pollution. CONSTITUTION: A waste collecting bag is composed of a collecting part(10) collecting contaminants, and an opening part(20) putting the waste in the collecting part. The opening part has inlet members(30,40). An adhesive plate (32) is formed in the lower part of the inlet member, and a separating plate(33) is placed in the upper part. The adhesive plate is stuck to the inlet of the collecting part, and the opening part is fixed in the inlet of the collecting part by a double-faced tape or an adhesive. An adhesive part(60) is formed in the adhesive plate of the opening part or the inlet of the collecting plate. The opening part is stuck to the collecting part with the adhesive part after putting the waste in the bag, and the collecting part is finally sealed.

Data supplied from the ***espacenet*** database — Worldwide

Toll Free:
1.800.301.3945
SEARCH:

home commercial my account view cart

Home > Cleaning & Maintenance > Skim & Leaf Nets >

Store

Pool Chemicals
Winterizing & Covers
Automatic Pool Cleaners
Salt Pool Systems
Pool Pumps
Replacement Motors
Pool Filters
Pool Heaters
Chlorinators & Feeders
Cleaning & Maintenance
Water Testing
Pool Safety
Above Ground Supplies
Games & Toys
Floats & Inflatables
Pool & Patio Accessories
Swimwear & Sports Gear
Ladders & Handrails
Lights & Electrical
Paint & Repairs
Plumbing
Pool Parts
Commercial
Spa Supplies
Baptistries

Deals & Specials
How-To Center
Parts Catalog
Spa Covers

GUZZLER LEAF RAKE NET

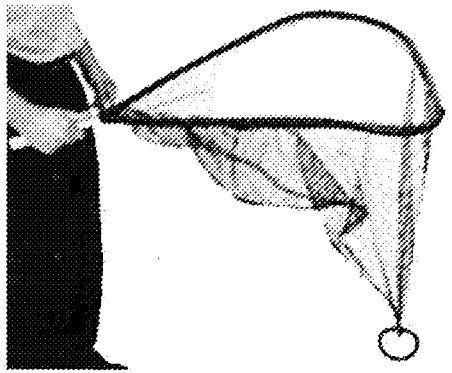

Our Price: $37.99

Qty: 1

ADD TO CART

Product Code: 3159

ADD TO WISH LIST

Description

Guzzler Pool Leaf Rake Net

The Leaf Guzzler is an oversized leaf net which gives you faster cleaning capabilities. The Leaf Guzzler comes with a dumping ring positioned at the bottom of the leaf bag which creates an easy dumping method. Will fit any standard telescopic pole.

Share your knowledge of this product with other customers... Be the first to write a review.

Browse for more products in the same category as this item:

Cleaning & Maintenance > Skim & Leaf Nets

Salt Water Pools - FAQ

Deals & Specials!
Discounted Pool And Spa Supplies.

Join our mailing list!

Join Now

Same day shipping. Only **$9.99** shipping and handling on most items! Some products and pricing may differ from our physical retail locations. Call us toll free at **1-800-301-3945** for one on one assistance.

About Us Become an Affiliate Privacy Policy Contact Us Bookmark Us
Returns Policy Shipping Policy Product Index Category Index Help Terms of Use

Copyright © 2009 Memphis Pool. All Rights Reserved.

Shopping Cart Powered by Volusion.

A Convenient way to Bag Leaves

If your yard has trees growing in it or the neighbors' trees' leaves blow onto your property, your backyard can look messy and unkempt very quickly. Cleaning up leaves can be an energy consuming process. Raking leaves together and picking them up a few armfuls at a time takes forever and is almost guaranteed to have

you choking on dust in the process. We offer a convenient way to bag leaves, so that clearing leaves and debris from your lawn or garden is as easy as sweeping it into a pile and letting our bagging system do the tedious carrying work.

Buy a Large, Re-Usable Lawn Leaf Tarp which will last a lifetime

The cost of replacing cheap tarps which tear and blow around can mount up when you constantly have to pick up leaves in your lawn, not to mention the fact that the leafreaper is designed to easily collect and funnel leaves into waste bags. The leafreaper cleans up like magic, just hose it off and it easily stores on a shelf or in the corner of your garage. No more recycling cheap plastic tarps -- it is always less expensive to re-use items where possible. The leafreaper, a large tarp that is made from rip stop nylon has been created with durability in mind, so that you can re-use it again and again to great results.

This Leaf Holder Makes Maneuvering Leaves Easier

When doing a leaf cleanup in your lawn or garden, the logistics of getting leaves into a bag which does not stay open can be a nightmare, and your hard work can easily be undone by a bag which rips or causes you to miss the bag's mouth by flapping closed as you are trying to fill it. A novel system whereby your leaf bag is filled from a tarp, with two rods on either side and a handle, allows you to first sweep all the leaves to the tarps center before folding over and carrying the bag to your garden refuse bin or collection bag. Leaf disposal is quick and easy.

Do Major Leaf Clean Up with a Well designed Product

You won't have to traipse back and forth continuously when you have the leafreaper lawn leaf tarp that can hold a large maximum weight (approximately 35 pounds) and is easy to carry via its design and handle. Our leaf collection system is easy to assemble, clean and store, so that you will be able to tidy your lawn or garden quickly with minimum fuss. You can view our video of the leafreaper in action, and see for yourself the efficiency with which it takes care of leaves and any other lawn or garden debris.

Gather and Bag Leaves in Far Less Time

If you are a busy person, but like to do your home maintenance work yourself, a timesaving solution such as our leafreaper can make your outdoor time more enjoyable and reduce stress and injury. Imagine enjoying leaf bagging because you have the right tool to make the job quick and easy. No need to pay a lawn service or check up on someone else's work. Save time and money while you unwind and relax and have the satisfaction of a job well done. With our novel, patented leaf bagging system, you can save up to 50% of the time it would normally take to clean up leaves in your yard or driveway or garden. You can bag more leaves at once, taking care of the mess quickly before a gust of wind has a chance to undo your hard work.

The Leafreaper is a Fast Way to Harvest Your Garden

The Leafreaper is very versatile. Lay it out in your garden when you are ready to harvest. Fill it from the center out with all your ripe vegetables, herbs, and fruits. Easily pick everything up using the outside center handles and move to the hose where you can gently spray clean all your produce. Let it dry and carry it to the house for storage or preparation. Notice that unlike filling a bucket or basket none of your beautiful, fresh produce suffers bruising and you can gather numerous vegetables in one trip. Everything can be easily moved and cleaned without re-handling. Harvesting your garden just got a little more fun and efficient.

Leaf and Lawn Reaper © 2008
Email: sales@leafreaper.com

UNITED STATES PATENT AND TRADEMARK OFFICE

UNITED STATES DEPARTMENT OF COMMERCE
United States Patent and Trademark Office
Address: COMMISSIONER FOR PATENTS
P.O. Box 1450
Alexandria, Virginia 22313-1450
www.uspto.gov

APPLICATION NO.	FILING DATE	FIRST NAMED INVENTOR	ATTORNEY DOCKET NO.	CONFIRMATION NO.
12/916,151	10/29/2010	Mark Noonan	6175A-000005/US/CPB	9047

28997 7590 12/21/2010
HARNESS, DICKEY, & PIERCE, P.L.C
7700 Bonhomme, Suite 400
ST. LOUIS, MO 63105

EXAMINER
NIESZ, JASON KAROL

ART UNIT	PAPER NUMBER
3751	

MAIL DATE	DELIVERY MODE
12/21/2010	PAPER

Please find below and/or attached an Office communication concerning this application or proceeding.

The time period for reply, if any, is set in the attached communication.

UNITED STATES PATENT AND TRADEMARK OFFICE

Commissioner for Patents
United States Patent and Trademark Office
P.O. Box 1450
Alexandria, VA 22313-1450
www.uspto.gov

HARNESS, DICKEY, & PIERCE, P.L.C
7700 Bonhomme, Suite 400
ST. LOUIS MO 63105

In re Application of	:	
NOONAN, MARK	:	DECISION ON REQUEST TO
Application No. 12/916,151	:	PARTICIPATE IN PATENT
Filed: Oct. 29, 2010	:	PCT/PROSECUTION HIGHWAY
Attorney Docket No. 6175A-000005/US/CPB	:	PROGRAM AND PETITION
Title: DEVICES AND METHODS RELATING TO THE CLEANUP OF LEAVES, TO POURING OR FILLING NON-LIQUIDS, AND/OR TO RECONFIGURABLE FUNNELING APPARATUS	:	37 CFR 1.102(a)

This is a decision on the renewed request to participate in the Patent Prosecution Highway (PPH) program and the petition under 37 CFR 1.102(a), filed Dec. 17, 2010, to make the above-identified application special.

The request and petition are granted.

A grantable request to participate in the PPH program and petition to make special require:
(1) The U.S. application must disclose an eligible relationship to one or more PCT applications filed in the KIPO, JPO, EPO or USPTO;
(2) Applicant must submit a copy of the allowable/patentable claim(s) from the PCT application(s) latest international work product (the written opinion or the IPER) along with an English translation thereof and a statement that the English translation is accurate;
(3) All the claims in the U.S. application must sufficiently correspond or be amended to sufficiently correspond to the allowable/patentable claim(s) in the PCT application(s);
(4) Examination of the U.S. application has not begun;
(5) Applicant must submit a copy of the latest international work product from the PCT application containing the allowable/patentable claim(s) along with an English translation thereof and a statement that the English translation is accurate; and
(6) Applicant must submit an IDS listing the documents cited by the PCT examiner in the international work product along with copies of documents except U.S. patents or U.S. patent application publications.

In light of the petition being properly submitted, the request to participate in the PPH program and the petition comply with the above requirements. Accordingly, the above-identified application has been accorded "special" status.

The preliminary amendment of Nov. 17, 2010 has been entered. Currently, claims 1-28 are pending.

The applicant is encouraged to cite and submit all relevant prior art references, if any, to facilitate examination in this application.

Other inquiries concerning the examination or status of the application should be directed to Greg Huson, the SPE of Art Unit 3751 and 571-272-4887 for Class 141/136 and also accessible in the PAIR system at http://www.uspto.gov/ebc.index.html.

All other inquiries concerning the examination or status of the application should be directed to the Patent Application Information Retrieval (PAIR) system.

This application will be forwarded and docketed to an examiner for action on the merits commensurate with this decision.

Telephone inquiries concerning this decision should be directed to Henry C. Yuen, at 571-272-4856.

The petition is **granted.**

/Henry C. Yuen/

Henry C. Yuen, Special Programs Examiner
Technology Center 3700 – Mechanical Engineering,
Manufacturing and Products
571-272-4856

IN THE UNITED STATES PATENT AND TRADEMARK OFFICE

First Named Inventor: Maria Cecilia MAZZARO	)
Confirmation No.: 9053	)
	)
Serial No.: 12/916,153	)
	)
Filing Date: October 29, 2010	)
	)
Atty Docket No.: 246558-1	)

Commissioner for Patents
P.O. Box 1450
Alexandria, VA 22313-1450

Statement Concerning the Basis for the Special Status

SIR:

Applicant respectfully submits that Special Status is sought on the basis that the present invention materially contributes to the development of renewable energy resources or energy conservation.

The undersigned attorney may be contacted at the number below to facilitate the resolution of any matters. Please charge any fees that are incurred in connection with this Statement to deposit account no. 09-0470.

Respectfully submitted,

General Electric Company

By : /Douglas D. Zhang/
Douglas D. Zhang
Reg. No. 37,985

Dated: December 29, 2010

GE Global Patent Operation
2 Corporate Drive, Suite 648
Shelton, CT 06484
203-944-6755

Doc Code: PET.GREEN
Document Description: Petition for Green Tech Pilot

PTO/SB/420 (11-10)
Approved for use through 01/31/2011. OMB 0651-0062
U.S. Patent and Trademark Office; U. S. DEPARTMENT OF COMMERCE
Under the Paperwork Reduction Act of 1995, no persons are required to respond to a collection of information unless it displays a valid OMB control number.

PETITION TO MAKE SPECIAL UNDER THE GREEN TECHNOLOGY PILOT PROGRAM

Attorney Docket Number: 246558-1	Application Number (if known): 12/916,153	Filing date: October 29, 2010
First Named Inventor: Maria Cecilia MAZZARO		
Title: CONTROL SYSTEM AND METHODS OF VERIFYING OPERATION OF AT LEAST ONE WIND TURBINE SENSOR		

APPLICANT HEREBY REQUESTS TO PARTICIPATE IN THE GREEN TECHNOLOGY PILOT PROGRAM FOR THE ABOVE-IDENTIFIED APPLICATION. See Instruction Sheet on page 2.

This petition must be timely filed electronically using the USPTO electronic filing system, EFS-Web.

1. By filing this petition:

   Applicant is requesting early publication: Applicant hereby requests early publication under 37 CFR 1.219 and the publication fee set forth in 37 CFR 1.18(d) accompanies this request.

2. By filing this petition: applicant is agreeing to make an election without traverse in a telephonic interview and elect an invention that meets the eligibility requirements for the Green Technology Pilot Program, if the Office determines that the claims are not obviously directed to a single invention. See Instruction Sheet.

3. This request is accompanied by statements of special status for the eligibility requirement.

4. The application contains no more than three (3) independent claims and twenty (20) total claims.

5. The application does not contain any multiple dependent claims.

6. Other attachments: Statement Concerning the Basis for the Special Status

Signature /Douglas D. Zhang/	Date December 29, 2010
Name (Print/Typed) Douglas D. Zhang	Registration Number 37,985

Note: *Signatures of all the inventors or assignees of record of the entire interest or their representative(s) are required in accordance with 37 CFR 1.33 and 11.18. Please see 37 CFR 1.4(d) for the form of the signature. If necessary, submit multiple forms for more than one signature see below*.*

☐ *Total of ..... forms are submitted.

The information is required to obtain or retain a benefit by the public which is to file (and by the USPTO to process) an application. Confidentiality is governed by 35 U.S.C. 122 and 37 CFR 1.11 and 1.14. This collection is estimated to take 12 hours to complete, including gathering, preparing, and submitting the completed application form to the USPTO. Time will vary depending upon the individual case. Any comments on the amount of time you require to complete this form and/or suggestions for reducing this burden, should be sent to the Chief Information Officer, U.S. Patent and Trademark Office, U.S. Department of Commerce, P.O. Box 1450, Alexandria, VA 22313-1450. DO NOT SEND FEES OR COMPLETED FORMS TO THIS ADDRESS. **SEND TO: Commissioner for Patents, P.O. Box 1450, Alexandria, VA 22313-1450.**

If you need assistance in completing the form, call 1-800-PTO-9199 and select option 2.

Privacy Act Statement

The **Privacy Act of 1974 (P.L. 93-579)** requires that you be given certain information in connection with your submission of the attached form related to a patent application or patent. Accordingly, pursuant to the requirements of the Act, please be advised that: (1) the general authority for the collection of this information is 35 U.S.C. 2(b)(2); (2) furnishing of the information solicited is voluntary; and (3) the principal purpose for which the information is used by the U.S. Patent and Trademark Office is to process and/or examine your submission related to a patent application or patent. If you do not furnish the requested information, the U.S. Patent and Trademark Office may not be able to process and/or examine your submission, which may result in termination of proceedings or abandonment of the application or expiration of the patent.

The information provided by you in this form will be subject to the following routine uses:

1. The information on this form will be treated confidentially to the extent allowed under the Freedom of Information Act (5 U.S.C. 552) and the Privacy Act (5 U.S.C 552a). Records from this system of records may be disclosed to the Department of Justice to determine whether disclosure of these records is required by the Freedom of Information Act.
2. A record from this system of records may be disclosed, as a routine use, in the course of presenting evidence to a court, magistrate, or administrative tribunal, including disclosures to opposing counsel in the course of settlement negotiations.
3. A record in this system of records may be disclosed, as a routine use, to a Member of Congress submitting a request involving an individual, to whom the record pertains, when the individual has requested assistance from the Member with respect to the subject matter of the record.
4. A record in this system of records may be disclosed, as a routine use, to a contractor of the Agency having need for the information in order to perform a contract. Recipients of information shall be required to comply with the requirements of the Privacy Act of 1974, as amended, pursuant to 5 U.S.C. 552a(m).
5. A record related to an International Application filed under the Patent Cooperation Treaty in this system of records may be disclosed, as a routine use, to the International Bureau of the World Intellectual Property Organization, pursuant to the Patent Cooperation Treaty.
6. A record in this system of records may be disclosed, as a routine use, to another federal agency for purposes of National Security review (35 U.S.C. 181) and for review pursuant to the Atomic Energy Act (42 U.S.C. 218(c)).
7. A record from this system of records may be disclosed, as a routine use, to the Administrator, General Services, or his/her designee, during an inspection of records conducted by GSA as part of that agency's responsibility to recommend improvements in records management practices and programs, under authority of 44 U.S.C. 2904 and 2906. Such disclosure shall be made in accordance with the GSA regulations governing inspection of records for this purpose, and any other relevant (*i.e.*, GSA or Commerce) directive. Such disclosure shall not be used to make determinations about individuals.
8. A record from this system of records may be disclosed, as a routine use, to the public after either publication of the application pursuant to 35 U.S.C. 122(b) or issuance of a patent pursuant to 35 U.S.C. 151. Further, a record may be disclosed, subject to the limitations of 37 CFR 1.14, as a routine use, to the public if the record was filed in an application which became abandoned or in which the proceedings were terminated and which application is referenced by either a published application, an application open to public inspection or an issued patent.
9. A record from this system of records may be disclosed, as a routine use, to a Federal, State, or local law enforcement agency, if the USPTO becomes aware of a violation or potential violation of law or regulation.

UNITED STATES PATENT AND TRADEMARK OFFICE

UNITED STATES DEPARTMENT OF COMMERCE
United States Patent and Trademark Office
Address: COMMISSIONER FOR PATENTS
P.O. Box 1450
Alexandria, Virginia 22313-1450
www.uspto.gov

APPLICATION NO.	FILING DATE	FIRST NAMED INVENTOR	ATTORNEY DOCKET NO.	CONFIRMATION NO.
12/916,153	10/29/2010	Maria Cecilia Mazzaro	246558 (22402-240)	9053

45432 7590 01/19/2011
PATRICK W. RASCHE (22402)
ARMSTRONG TEASDALE LLP
7700 Forsyth Boulevard
Suite 1800
St. Louis, MO 63105

EXAMINER

ART UNIT	PAPER NUMBER
2839	

NOTIFICATION DATE	DELIVERY MODE
01/19/2011	ELECTRONIC

Please find below and/or attached an Office communication concerning this application or proceeding.

The time period for reply, if any, is set in the attached communication.

Notice of the Office communication was sent electronically on above-indicated "Notification Date" to the following e-mail address(es):

USpatents@armstrongteasdale.com

UNITED STATES PATENT AND TRADEMARK OFFICE

Commissioner for Patents
United States Patent and Trademark Office
P.O. Box 1450
Alexandria, VA 22313-1450
www.uspto.gov

PATRICK W. RASCHE (22402)
ARMSTRONG TEASDALE LLP
7700 Forsyth Boulevard
Suite 1800
St. Louis MO 63105

In re Application of	:	
MAZZARO et al.	:	DECISION ON PETITION
Application No. 12/916,153	:	TO MAKE SPECIAL UNDER
Filed: October 29, 2010	:	THE GREEN TECHNOLOGY
Attorney Docket No. 246558 (22402-240)	:	PILOT PROGRAM

This is a decision on the petition under 37 CFR 1.102, filed on December 30, 2010, to make the above-identified application special under the pilot program for applications pertaining to Green Technologies as set forth 74 Federal Register Notice 64666 (December 8, 2009) and amended by 75 Federal Register Notice 28554 (May 21, 2010) and 75 Federal Register Notice 69049 (November 10, 2010).

The petition is **GRANTED**.

A grantable petition to make an application special under 37 CFR 1.102 and the pilot program as set forth in 74 FR 64666 must be directed to a nonprovisional application filed under 35 USC 111(a) or be a national stage entry under 35 USC 371, exclusive of any reissue applications.

In order to qualify for special status, the following requirements must be met. 1) The application must have no more than 3 independent claims and no more than 20 total claims. 2) The application must not contain any multiple dependent claims. 3) The petition must state the basis for seeking special status, i.e., the claimed invention either: A) materially enhances the quality of the environment or B) materially contributes to: i) the discovery or development of renewable energy resources, ii) the more efficient utilization and conservation of energy resources, or iii) greenhouse gas emission reduction. 4) If the disclosure is not clear on its face that the claimed invention materially contributes under category (A) or (B), the petition must be accompanied by a statement by the applicant, assignee, or an attorney/agent registered to practice before the Office explaining how the materiality standard is met. 5) A statement that applicant will agree to make an election without traverse in a telephonic interview if a restriction requirement is made by the examiner. 6) The petition to make special must be filed electronically. 7) The petition must be filed at least one day prior to the date that a first Office Action appears in the Patent Application Information Retrieval (PAIR) system. 8) The petition must be accompanied by a request for early publication in compliance with 37 CFR 1.219 and include the publication fee as set forth in 37 CFR 1.18(d).

The requirement for a fee for consideration of the petition to make special for applications pertaining to Green Technologies has been waived.

The instant petition complies with items 1 – 8 above. Accordingly, the above-identified application has been accorded "special" status.

Telephone inquires concerning this decision should be directed to Lee W. Young at 571-272-4549.

The application is being forwarded to the Technology Center Art Unit 2839 for action in its regular turn.

Lee W. Young
Quality Assurance Specialist
Technology Center 2800

UNITED STATES PATENT AND TRADEMARK OFFICE

Commissioner for Patents
United States Patent and Trademark Office
P.O. Box 1450
Alexandria, VA 22313-1450
www.uspto.gov

In re Application of
Michael David Erlanger

Application No. 12916154

Filed:

Attorney Docket No. 04697-P0016B

:DECISION ON PETITION TO MAKE SPECIAL
:UNDER 37 CFR 1.102(c)(1)

This is a decision on the electronic petition under 37 CFR 1.102 (c)(1), filed 29-OCT-2010 to make the above-identified application special based on applicant's age as set forth in MPEP § 708.02, Section IV.

The petition is **GRANTED**.

A grantable petition to make an application special under 37 CFR 1.102(c)(1), MPEP § 708.02, Section IV: Applicant's Age must include a statement by applicant or a registered practitioner having evidence that applicant is at least 65 years of age. No fee is required.

Accordingly, the above-identified application has been accorded "special" status and will be taken up for action by the examiner upon the completion of all pre-examination processing.

Telephone inquiries concerning this electronic decision should be directed to the Electronic Business Center at 866-217-9197.

All other inquiries concerning either the examination or status of the application should be directed to the Technology Center.

UNITED STATES PATENT AND TRADEMARK OFFICE

Commissioner for Patents
United States Patent and Trademark Office
P.O. Box 1450
Alexandria, VA 22313-1450
www.uspto.gov

ST. ONGE STEWARD JOHNSTON & REENS, LLC
986 BEDFORD STREET
STAMFORD, CT 06905-5619

MAILED
DEC 30 2010
OFFICE OF PETITIONS

In re Application of :
Michael David Erlanger :
Application No. 12/916,154 : ON PETITION
Filed: October 29, 2010 :
Attorney Docket No. 04697-P0016B :

This is a decision on the petition under 37 CFR 1.102(c)(1), filed October 29, 2010, to make the above-identified application special based on applicant's age as set forth in M.P.E.P. § 708.02, Section IV.

The petition is **GRANTED**.

A grantable petition to make an application special under 37 CFR 1.102(c)(1) and MPEP § 708.02, Section IV: Applicant's Age must be accompanied by evidence showing that at least one of the applicants is 65 years of age, or more, such as a birth certificate or a statement by applicant. No fee is required.

The instant petition includes a statement (PTO/SB/130 form) by the applicant's attorney that the applicant is 65 years of age. Accordingly, the above-identified application has been accorded "special" status.

Telephone inquiries concerning this decision should be directed to the undersigned at 571-272-6059. All other inquiries concerning either the examination or status of the application should be directed to the Technology Center.

This matter is being referred to the Technology Center Art Unit 3693 for action on the merits commensurate with this decision.

A. Kelley

Alicia Kelley
Petitions Examiner
Office of Petitions

UNITED STATES PATENT AND TRADEMARK OFFICE

UNITED STATES DEPARTMENT OF COMMERCE
United States Patent and Trademark Office
Address: COMMISSIONER FOR PATENTS
P.O. Box 1450
Alexandria, Virginia 22313-1450
www.uspto.gov

APPLICATION NO.	FILING DATE	FIRST NAMED INVENTOR	ATTORNEY DOCKET NO.	CONFIRMATION NO.
12/916,154	10/29/2010	Michael David Erlanger	04697-P0016B	9055

7590 04/13/2011
ST. ONGE STEWARD JOHNSTON & REENS, LLC
986 BEDFORD STREET
STAMFORD, CT 06905-5619

EXAMINER
KRAMER, JAMES A

ART UNIT	PAPER NUMBER
3693	

MAIL DATE	DELIVERY MODE
04/13/2011	PAPER

DECISION GRANTING PETITION UNDER 37 CFR 1.138(d)

The declaration of express abandonment is recognized

This is in response to the petition under 37 CFR 1.138(d), requesting for a refund of any previously paid search fee and excess claims fee in the above-identified application.

The petition is granted.

The express abandonment is recognized. Any previously paid search fee and excess claims fee are hereby refunded.

Telephone inquiries should be directed to the Office of Data Management at (571) 272-4200.

Mimi Farmer

Patent Publication Branch
Office of Data Management

FORM PET651G (Rev. 08/07)

CDL

UNITED STATES PATENT AND TRADEMARK OFFICE

Commissioner for Patents
United States Patent and Trademark Office
P.O. Box 1450
Alexandria, VA 22313-1450
www.uspto.gov

SEED INTELLECTUAL PROPERTY LAW GROUP PLLC
701 FIFTH AVE
SUITE 5400
SEATTLE WA 98104

RECEIVED
AUG 18 2008
Seed Intellectual Property Law Group PLLC

COPY MAILED
AUG 15 2008

In re Application of	:	
Gaitanaris, et al.	:	DECISION GRANTING STATUS
Application No. 11/940,917	:	UNDER 37 CFR 1.47(a)
Filed: November 15, 2007	:	
Attorney Docket No. 700128.401C1	:	

This is in response to the petition under 37 CFR 1.47(a), filed June 20, 2008.

The petition is **GRANTED.**

Petitioners have shown that the non-signing inventor, Kellie L. McIlwain, has constructively refused to join in the filing of the above-identified application. The petition fee of $200.00 is being charged to petitioners' deposit account.

The application and papers have been reviewed and found in compliance with 37 CFR 1.47(a). This application is hereby accorded Rule 1.47(a) status.

As provided in 37 CFR 1.47(c), this Office will forward notice of this application's filing to the non-signing inventor at the address given in the petition. Notice of the filing of this application will also be published in the Official Gazette.

This application is being referred to the Office of Patent Examination Processing for pre-examination processing.

Telephone inquiries regarding this decision should be directed to the undersigned at (571) 272-3230.

Shirene Willis Brantley
Shirene Willis Brantley
Senior Petitions Attorney
Office of Petitions

UNITED STATES PATENT AND TRADEMARK OFFICE

Commissioner for Patents
United States Patent and Trademark Office
P.O. Box 1450
Alexandria, VA 22313-1450
www.uspto.gov

Omeros Corporation
1420 FIFTH AVENUE
SUITE 2600
SEATTLE WA 98101

MAILED
MAY 12 2011
OFFICE OF PETITIONS

In re Application of	:	
Gaitanaris et al.	:	
Application No. 12/916227	:	
Filing or 371(c) Date: 10/29/2010	:	
Attorney Docket Number:	:	
NG.1.0068.US2	:	ON PETITION

This Decision is in response to the "Petition Under 37 C.F.R. §1.47(a) to Accept Application When Joint Inventor Refuses to Join or Cannot be Reached," filed March 28, 2010, to allow the other inventor(s) to proceed with the application on behalf of himself or herself and the nonsigning inventor(s).

The petition is **granted**.

The above-identified application and papers have been reviewed and found in compliance with 37 CFR 1.47(a). This application is hereby accorded Rule 1.47(a) status.

Petitioner has shown that the non-signing inventor, Kellie L. McIlwain, refuses to join in the application.

As provided in Rule 1.47(a), this Office will forward notice of this application's filing to the non-signing inventor at the addresses given in the Petition. Notice of the filing of this application will also be published in the Official Gazette.

This application is being referred to the Office of Patent Application Processing for processing of the reply to the Notice in due course.

Telephone inquiries concerning this decision should be directed to the undersigned at (571) 272-3232.

/DLW/

Derek L. Woods
Attorney
Office of Petitions

UNITED STATES PATENT AND TRADEMARK OFFICE

Commissioner for Patents
United States Patent and Trademark Office
P.O. Box 1450
Alexandria, VA 22313-1450
www.uspto.gov

MS. KELLIE L. McILWAIN
33 KENNEDY STREET, N.W.
WASHINGTON, DC 20011

MAILED
MAY 12 2011
OFFICE OF PETITIONS

In re Application of	:	
Gaitanaris et al.	:	
Application No. 12/916227	:	LETTER
Filing or 371(c) Date: 10/29/2010	:	
Attorney Docket Number:	:	
NG.1.0068.US2	:	

Dear Ms. McIlwain:

You are named as a joint inventor in the above-identified United States patent application filed under the provisions of 35 U.S.C. 116 (United States Code) and 37 CFR 1.47(a), Rules of Practice in Patent Cases. Should a patent be granted on the application you will be designated therein as a joint inventor.

As a named inventor you are entitled to inspect any paper in the file wrapper of the application, order copies of all or any part thereof (at a prepaid cost per 37 CFR 1.19) or make your position of record in the application. Alternatively, you may arrange to do any of the preceding through a registered patent attorney or agent presenting written authorization from you. If you care to join the application, counsel of record (see below) would presumably assist you. Joining in the application would entail the filing of an appropriate oath or declaration by you pursuant to 37 CFR 1.63.

Telephone inquiries regarding this communication should be directed to the undersigned at (571) 272-3232. Requests for information regarding your application should be directed to the File Information Unit at (703) 308-2733. Information regarding how to pay for and order a copy of the application, or a specific paper in the application, should be directed to Certification Division at (703) 308-9726 or 1-800-972-6382 (outside the Washington D.C. area).

/DLW/

Derek L. Woods
Attorney
Office of Petitions

CC: Omeros Corporation
1420 FIFTH AVENUE
SUITE 2600
SEATTLE WA 98101

UNITED STATES PATENT AND TRADEMARK OFFICE

Commissioner for Patents
United States Patent and Trademark Office
P.O. Box 1450
Alexandria, VA 22313-1450
www.uspto.gov

THE SMALL PATENT LAW GROUP LLP
225 S. MERAMEC, STE. 725T
ST. LOUIS, MO 63105

MAILED
MAR 30 2012
OFFICE OF PETITIONS

In re Application of
John A. Moon, et al.
Application No.: 12/916,242
Filed: October 29, 2010
Attorney Docket No.: IP-0466-US (830-0466US)
For: MICROVESSELS, MICROPARTICLES, AND METHODS OF MANUFACTURING AND USING THE SAME

: DECISION ON REQUEST TO PARTICIPATE IN THE PATENT PROSECUTION HIGHWAY PROGRAM AND PETITION TO MAKE SPECIAL UNDER 37 CFR 1.102(a)

This is a decision on the request to participate in the PCT Patent Prosecution Highway (PCT-PPH) pilot program and the petition under 37 CFR 1.102(a), filed on February 1, 2012 to make the above-identified application special.

The request and petition are **GRANTED**.

Discussion

A grantable request to participate in the PCT-PPH pilot program and petition to make special require:

(1) The U.S. application must have an eligible relationship to one or more PCT applications where the ISA or IPEA are the JPO, EPO, KIPO, NPI, NBPR, IPAU, APO, RU, SPTO, PRV, SIPO or USPTO;

(2) At least one claim in the PCT application has novelty, inventive step, and industrial applicability and must be free of any observations in Box VIII in the latest work product in the international stage or applicant must identify and explain why the claim(s) is/are not subject to the observation in Box VIII;

(3) Applicant must submit a copy of the claim(s) from the PCT application(s) that have novelty, inventive step, and industrial applicability along with an English translation thereof and a statement that the English translation is accurate, if the claims are not in the English language;

(4) All the claims in the U.S. application must sufficiently correspond or be amended to sufficiently correspond to the claim(s) that have novelty, inventive step, and industrial applicability in the PCT application(s);

(5) Examination of the U.S. application has not begun;

(6) Applicant must submit a copy of the latest international work product from the PCT application indicating that the claim(s) have novelty, inventive step, and industrial applicability along with an English translation thereof and a statement that the English translation is accurate if the latest international work product is not in the English language;

(7) Applicant must submit an IDS listing the documents cited by the PCT examiner in the international work product along with copies of documents except U.S. patents or U.S. patent application publications.

The request to participate in the PCT-PPH pilot program and petition comply with the above requirements. Accordingly, the above-identified application has been accorded "special" status.

Telephone inquiries concerning this decision should be directed to the undersigned at 571-272-3204.

All other inquiries concerning the examination or status of the application is accessible in the PAIR system at http://www.uspto.gov/ebc.index.html.

This application will be forwarded to the examiner for action on the merits commensurate with this decision.

/SDB/

Sherry D. Brinkley
Petitions Examiner
Office of Petitions

PTO/SB/20PCT-EP (05-10)
Approved for use through 01/31/2012. OMB 0651-0058
U.S. Patent and Trademark Office; U. S. DEPARTMENT OF COMMERCE
Under the Paperwork Reduction Act of 1995, no persons are required to respond to a collection of information unless it displays a valid OMB control number.

REQUEST FOR PARTICIPATION IN THE PATENT COOPERATION TREATY - PATENT PROSECUTION HIGHWAY (PCT-PPH) PILOT PROGRAM BETWEEN THE EUROPEAN PATENT OFFICE (EPO) AND THE USPTO

Application No:	12/916,245	Filing date:	October 29, 2010
First Named Inventor:	Gunnar Russberg		
Title of the Invention:	Valve Apparatus		

THIS REQUEST FOR PARTICIPATION IN THE PCT-PPH PILOT PROGRAM ALONG WITH THE REQUIRED DOCUMENTS MUST BE SUBMITTED VIA EFS-WEB. INFORMATION REGARDING EFS-WEB IS AVAILABLE AT HTTP://WWW.USPTO.GOV/EBC/EFS_HELP.HTML

APPLICANT HEREBY REQUESTS PARTICIPATION IN THE PCT-PPH PROGRAM AND PETITIONS TO MAKE THE ABOVE-IDENTIFIED APPLICATION SPECIAL UNDER THE PCT-PPH PROGRAM.

The above-identified application is (1) a national stage entry of the corresponding PCT application, or (2) a national stage entry of another PCT application which claims priority to the corresponding PCT application, or (3) a national application that claims domestic/ foreign priority to the corresponding PCT application, or (4) a national application which forms the basis for the priority claim in the corresponding PCT application, or (5) a continuing application of a U.S. application that satisfies one of (1) to (4) above, or (6) a U.S. application that claims domestic benefit to a U.S. provisional application which forms the basis for the priority claim in the corresponding PCT application.

The corresponding PCT application number(s) is/are: PCT/EP2009/054866

The international filing date of the corresponding PCT application(s) is/are: April 23, 2009

I. List of Required Documents:

a. **A copy of the latest international work product (WO/ISA, WO/IPEA, or IPER) in the above–identified corresponding PCT application(s)**

- [x] Is attached
- [ ] Is not attached because the document is already in the U.S. application.

b. **A copy of all claims which were indicated as having novelty, inventive step and industrial applicability in the above-identified corresponding PCT application(s).**

- [x] Is attached.
- [ ] Is not attached because the document is already in the U.S. application.

c. **English translations of the documents in a. and b. above are attached (if the documents are not in the English language). A statement that the English translation is accurate is attached for the document in b. above.**

This collection of information is required by 35 U.S.C. 119, 37 CFR 1.55, and 37 CFR 1.102(d). The information is required to obtain or retain a benefit by the public, which is to file (and by the USPTO to process) an application. Confidentiality is governed by 35 U.S.C. 122 and 37 CFR 1.11 and 1.14. This collection is estimated to take 2 hours to complete, including gathering, preparing, and submitting the completed application form to the USPTO. Time will vary depending upon the individual case. Any comments on the amount of time you require to complete this form and/or suggestions for reducing this burden should be sent to the Chief Information Officer, U.S. Patent and Trademark Office, U.S. Department of Commerce, P.O. Box 1450, Alexandria, VA 22313-1450. DO NOT SEND FEES OR COMPLETED FORMS TO THIS ADDRESS.

Approved for use through 01/31/2012. OMB 0651-0058
U.S.Patent and Trademark Office; U.S. DEPARTMENT OF COMMERCE
Under the Paperwork Reduction Act of 1995, no persons are required to respond to a collection of information unless it displays a valid OMB control number.

REQUEST FOR PARTICIPATION IN THE PCT-PPH PILOT PROGRAM BETWEEN THE EPO AND THE USPTO

(continued)

Application No.:	12/916,245
First Named Inventor:	Gunnar Russberg

d. **(1) An information disclosure statement listing the documents cited in the international work products (ISR, WO/ISA, WO/IPEA, IPER) of the corresponding PCT application.**

☐ Is attached

☒ Has already been filed in the above-identified U.S. application on October 29, 2010

(2) Copies of all documents (except) for U.S. patents or U.S. patent application publications)

☐ Are attached.

☒ Have already been filed in the above-identified U.S. application on October 29, 2010

II. Claims Correspondence Table:

Claims in US Application	Patentable Claims in the corresponding PCT Application	Explanation regarding the correspondence
1	1	Corresponding claim (same)
2	2	Corresponding claim (same)
3	3	Corresponding claim (single dependency)
4	4	Corresponding claim (same)
5	5	Corresponding claim (single dependency)
6	6	Corresponding claim (same)
7	7	Corresponding claim (same)
8	8	Corresponding claim (single dependency)
9	9	Corresponding claim (same)
10	10	Corresponding claim (single dependency)
11	11	Corresponding claim (single dependency)

III. All the claims in the US application sufficiently correspond to the patentable claims in the corresponding PCT application.

Signature /Wesley W. Whitmyer, Jr./	Date December 29, 2010
Name (Print/Typed) Wesley W. Whitmyer, Jr.	Registration Number 33,558

Privacy Act Statement

The **Privacy Act of 1974 (P.L. 93-579)** requires that you be given certain information in connection with your submission of the attached form related to a patent application or patent. Accordingly, pursuant to the requirements of the Act, please be advised that: (1) the general authority for the collection of this information is 35 U.S.C. 2(b)(2); (2) furnishing of the information solicited is voluntary; and (3) the principal purpose for which the information is used by the U.S. Patent and Trademark Office is to process and/or examine your submission related to a patent application or patent. If you do not furnish the requested information, the U.S. Patent and Trademark Office may not be able to process and/or examine your submission, which may result in termination of proceedings or abandonment of the application or expiration of the patent.

The information provided by you in this form will be subject to the following routine uses:

1. The information on this form will be treated confidentially to the extent allowed under the Freedom of Information Act (5 U.S.C. 552) and the Privacy Act (5 U.S.C 552a). Records from this system of records may be disclosed to the Department of Justice to determine whether disclosure of these records is required by the Freedom of Information Act.
2. A record from this system of records may be disclosed, as a routine use, in the course of presenting evidence to a court, magistrate, or administrative tribunal, including disclosures to opposing counsel in the course of settlement negotiations.
3. A record in this system of records may be disclosed, as a routine use, to a Member of Congress submitting a request involving an individual, to whom the record pertains, when the individual has requested assistance from the Member with respect to the subject matter of the record.
4. A record in this system of records may be disclosed, as a routine use, to a contractor of the Agency having need for the information in order to perform a contract. Recipients of information shall be required to comply with the requirements of the Privacy Act of 1974, as amended, pursuant to 5 U.S.C. 552a(m).
5. A record related to an International Application filed under the Patent Cooperation Treaty in this system of records may be disclosed, as a routine use, to the International Bureau of the World Intellectual Property Organization, pursuant to the Patent Cooperation Treaty.
6. A record in this system of records may be disclosed, as a routine use, to another federal agency for purposes of National Security review (35 U.S.C. 181) and for review pursuant to the Atomic Energy Act (42 U.S.C. 218(c)).
7. A record from this system of records may be disclosed, as a routine use, to the Administrator, General Services, or his/her designee, during an inspection of records conducted by GSA as part of that agency's responsibility to recommend improvements in records management practices and programs, under authority of 44 U.S.C. 2904 and 2906. Such disclosure shall be made in accordance with the GSA regulations governing inspection of records for this purpose, and any other relevant (*i.e.*, GSA or Commerce) directive. Such disclosure shall not be used to make determinations about individuals.
8. A record from this system of records may be disclosed, as a routine use, to the public after either publication of the application pursuant to 35 U.S.C. 122(b) or issuance of a patent pursuant to 35 U.S.C. 151. Further, a record may be disclosed, subject to the limitations of 37 CFR 1.14, as a routine use, to the public if the record was filed in an application which became abandoned or in which the proceedings were terminated and which application is referenced by either a published application, an application open to public inspection or an issued patent.
9. A record from this system of records may be disclosed, as a routine use, to a Federal, State, or local law enforcement agency, if the USPTO becomes aware of a violation or potential violation of law or regulation.

PATENT
04189-P0042A WWW

IN THE UNITED STATES PATENT AND TRADEMARK OFFICE

Applicant	Gunnar Russberg
Application No. 12/916,245	Filing Date: October 29, 2010
Title of Application:	Valve Apparatus
Confirmation No. 9224	Art Unit: 3753

Mail Stop Amendment
Commissioner for Patents
Post Office Box 1450
Alexandria, VA 22313-1450

Request To Participate In Patent Prosecution Highway (PPH)

Filed herewith is form PTO/SB/20PCT-EP requesting participation in the PPH program and petitioning to make special U.S. Patent Application 12/916,245.

U.S. Pat. App. 12/916,245 is a continuation of, and claims priority from, PCT application PCT/EP2009/054866, filed on April 23, 2009. Applicant seeks accelerated examination under the PPH Program because corresponding claims in the PCT application have been found patentable in an International Preliminary Report on Patentability (IPRP) issued by the European Patent Office.

Filed herewith is a copy of the IPRP dated November 2, 2010, indicating that claims 1-11 were found to have novelty, inventive step and industrial applicability. Also filed herewith is a copy of claims 1-11 from PCT/EP2009/054866 publication WO 2009/133012.

The reference cited in the IPRP was submitted to the Office in an IDS on October 29, 2010.

The claims of U.S. Pat. App. 12/916,245 have been amended to conform with U.S. claim format requirements. All claims correspond to claims found patentable in the

IPRP and are believed to have similar or more limited scope, as shown in the claims correspondence table in form PTO/SB/20PCT-EP.

Applicant's request to participate in the Patent Prosecution Highway and petition to make special is believed to be in condition for granting and a favorable decision is hereby requested.

Applicant believes that no fee is due in connection with the filing of this request. However, if any fee is due, please charge Deposit Account No. 19-4516.

Respectfully submitted,

/ Wesley W. Whitmyer, Jr./

December 29, 2010

Wesley W. Whitmyer, Jr., Registration No. 33,558
Stephen Ball, Registration No. 59,169
Attorney for Applicants
ST.ONGE STEWARD JOHNSTON & REENS LLC
986 Bedford Street
Stamford, CT 06905-5619
Tel. 203 324-6155

PATENT COOPERATION TREATY

PCT

INTERNATIONAL PRELIMINARY REPORT ON PATENTABILITY
(Chapter I of the Patent Cooperation Treaty)

(PCT Rule 44*bis*)

Applicant's or agent's file reference 10379WO/HK/K	**FOR FURTHER ACTION**	See item 4 below
International application No. PCT/EP2009/054866	International filing date *(day/month/year)* 23 April 2009 (23.04.2009)	Priority date *(day/month/year)* 30 April 2008 (30.04.2008)
International Patent Classification (8th edition unless older edition indicated) See relevant information in Form PCT/ISA/237		
Applicant ABB RESEARCH LTD		

1. This international preliminary report on patentability (Chapter I) is issued by the International Bureau on behalf of the International Searching Authority under Rule 44 *bis*.1(a).

2. This REPORT consists of a total of 5 sheets, including this cover sheet.

   In the attached sheets, any reference to the written opinion of the International Searching Authority should be read as a reference to the international preliminary report on patentability (Chapter I) instead.

3. This report contains indications relating to the following items:

☒	Box No. I	Basis of the report
☐	Box No. II	Priority
☐	Box No. III	Non-establishment of opinion with regard to novelty, inventive step and industrial applicability
☐	Box No. IV	Lack of unity of invention
☒	Box No. V	Reasoned statement under Article 35(2) with regard to novelty, inventive step or industrial applicability; citations and explanations supporting such statement
☐	Box No. VI	Certain documents cited
☐	Box No. VII	Certain defects in the international application
☐	Box No. VIII	Certain observations on the international application

4. The International Bureau will communicate this report to designated Offices in accordance with Rules 44*bis*.3(c) and 93*bis*.1 but not, except where the applicant makes an express request under Article 23(2), before the expiration of 30 months from the priority date (Rule 44*bis* .2).

	Date of issuance of this report 02 November 2010 (02.11.2010)
The International Bureau of WIPO 34, chemin des Colombettes 1211 Geneva 20, Switzerland Facsimile No. +41 22 338 82 70	Authorized officer Agnes Wittmann-Regis e-mail: pt06.pct@wipo.int

PATENT COOPERATION TREATY

From the
INTERNATIONAL SEARCHING AUTHORITY

To:

see form PCT/ISA/220

PCT

WRITTEN OPINION OF THE
INTERNATIONAL SEARCHING AUTHORITY
(PCT Rule 43*bis*.1)

Date of mailing
(day/month/year) see form PCT/ISA/210 (second sheet)

Applicant's or agent's file reference
see form PCT/ISA/220

FOR FURTHER ACTION
See paragraph 2 below

International application No.	International filing date *(day/month/year)*	Priority date *(day/month/year)*
PCT/EP2009/054866	23.04.2009	30.04.2008

International Patent Classification (IPC) or both national classification and IPC
INV. F16K11/076

Applicant
ABB RESEARCH LTD

1. This opinion contains indications relating to the following items:

- ☒ Box No. I Basis of the opinion
- ☐ Box No. II Priority
- ☐ Box No. III Non-establishment of opinion with regard to novelty, inventive step and industrial applicability
- ☐ Box No. IV Lack of unity of invention
- ☒ Box No. V Reasoned statement under Rule 43*bis*.1(a)(i) with regard to novelty, inventive step or industrial applicability; citations and explanations supporting such statement
- ☐ Box No. VI Certain documents cited
- ☐ Box No. VII Certain defects in the international application
- ☐ Box No. VIII Certain observations on the international application

2. **FURTHER ACTION**

If a demand for international preliminary examination is made, this opinion will usually be considered to be a written opinion of the International Preliminary Examining Authority ("IPEA") except that this does not apply where the applicant chooses an Authority other than this one to be the IPEA and the chosen IPEA has notifed the International Bureau under Rule 66.1*bis*(b) that written opinions of this International Searching Authority will not be so considered.

If this opinion is, as provided above, considered to be a written opinion of the IPEA, the applicant is invited to submit to the IPEA a written reply together, where appropriate, with amendments, before the expiration of 3 months from the date of mailing of Form PCT/ISA/220 or before the expiration of 22 months from the priority date, whichever expires later.

For further options, see Form PCT/ISA/220.

3. For further details, see notes to Form PCT/ISA/220.

Name and mailing address of the ISA:	Date of completion of this opinion	Authorized Officer
European Patent Office D-80298 Munich Tel. +49 89 2399 - 0 Fax: +49 89 2399 - 4465	see form PCT/ISA/210	Rusanu, Irina Telephone No. +49 89 2399-7280

WRITTEN OPINION OF THE INTERNATIONAL SEARCHING AUTHORITY

International application No.
PCT/EP2009/054866

Box No. I Basis of the opinion

1. With regard to the **language**, this opinion has been established on the basis of:

   ☒ the international application in the language in which it was filed

   ☐ a translation of the international application into , which is the language of a translation furnished for the purposes of international search (Rules 12.3(a) and 23.1 (b)).

2. ☐ This opinion has been established taking into account the **rectification of an obvious mistake** authorized by or notified to this Authority under Rule 91 (Rule 43bis.1(a))

3. With regard to any **nucleotide and/or amino acid sequence** disclosed in the international application and necessary to the claimed invention, this opinion has been established on the basis of:

   a. type of material:

   ☐ a sequence listing

   ☐ table(s) related to the sequence listing

   b. format of material:

   ☐ on paper

   ☐ in electronic form

   c. time of filing/furnishing:

   ☐ contained in the international application as filed.

   ☐ filed together with the international application in electronic form.

   ☐ furnished subsequently to this Authority for the purposes of search.

4. ☐ In addition, in the case that more than one version or copy of a sequence listing and/or table relating thereto has been filed or furnished, the required statements that the information in the subsequent or additional copies is identical to that in the application as filed or does not go beyond the application as filed, as appropriate, were furnished.

5. Additional comments:

Box No. V Reasoned statement under Rule 43*bis*.1(a)(i) with regard to novelty, inventive step or industrial applicability; citations and explanations supporting such statement

1. Statement

Novelty (N)	Yes:	Claims	1-11
	No:	Claims	
Inventive step (IS)	Yes:	Claims	1-11
	No:	Claims	
Industrial applicability (IA)	Yes:	Claims	1-11
	No:	Claims	

2. Citations and explanations

see separate sheet

Re Item V

Reasoned statement with regard to novelty, inventive step or industrial applicability; citations and explanations supporting such statement

Independent claim 1 relates to a valve apparatus comprising a cylindrical casing, axial inlets, radial outlets and a rotating member defining separated chambers, in order to switch fluid connection between inlets and outlets, according to the preamble of this claim.

Closest prior art: document JP 7107764, cited in the description. Claim 1 differs from this document by that, the outlet has a fluid path length that varies along the circumference of said casing depending on the rotational speed of said shaft and said member such that the interfaces between fluids originating from different ones of said axially arranged inlets will be esentially vertical to the flow direction of the fluids downstream of the outlet.

By this feature, disturbances during fluid switching are avoided.

The subject-matter of claim 1 is therefore new (Article 33(2) PCT).

The expression "fluid path length" has been enough described so its meaning is clear, in the light of the description. The same applies to the term "vertical", when speaking about the perpendicular switching front line.

None of the prior art documents describes, neither renders obvious such a configuration of the fluid flow, so independent claim 1 is considered also inventive (Article 33(3) PCT).

Claims 2-11 are dependent of claim 1 and therefore also new and inventive.

CLAIMS

1. A valve apparatus comprising a cylindrical casing (41); a shaft (42) arranged symmetrically in said casing; a member (43) fixedly attached to said shaft and in close fit with said cylindrical casing, thereby defining separated chambers (44a-b) within the casing; at least one outlet (46a-f; L_1-L_4; 61; 71) fixedly arranged along the circumference of said casing; and a plurality of axially arranged inlets (45a-b), each of which being constantly in fluid communication with a respective one of said separated chambers, wherein

- the separated chambers and thereby the axially arranged inlets are alternately in fluid connection with a circumferential reference point of said at least one outlet in response to rotation of said shaft and said member with respect to said casing, c h a r a c t e r i z e d i n that

- said at least one outlet has a fluid path length that varies along the circumference of said casing depending on the rotational speed of said shaft and said member such that the interfaces between fluids originating from different ones of said axially arranged inlets will be essentially vertical to the flow direction of the fluids downstream of said at least one outlet.

2. The valve apparatus of claim 1 wherein said interfaces between fluids originating from different ones of said axially arranged inlets are essentially planar surfaces.

3. The valve apparatus of claim 1 or 2 wherein said valve apparatus comprises a single outlet (71) fixedly arranged along a major part of the circumference of said casing.

4. The valve apparatus of claim 3 wherein said single outlet is provided with fluid guiding walls (63) arranged parallel with a

fluid direction in said single outlet, thereby defining a plurality of sub-outlets (72).

5. The valve apparatus of claim 1 or 2 wherein

- said valve apparatus comprises a plurality of outlets (L_1-L_4; 61) fixedly arranged along the circumference of said casing; and

- the separated chambers and thereby the axially arranged outlets are alternately in fluid connection with each of the outlets fixedly arranged along the circumference of said casing in response to the rotation of said shaft and said member with respect to said casing.

6. The valve apparatus of claim 5 wherein

- said plurality of outlets have each a fluid path length that varies along the circumference of said casing depending on the rotational speed of said shaft and said member such that the interfaces between fluids originating from different ones of said axially arranged inlets will be essentially perpendicular to the flow direction of the fluids downstream of the respective outlet.

7. The valve apparatus of claim 6 wherein

- said plurality of outlets are each provided with fluid guiding walls (63) arranged parallel with a fluid direction of the respective outlet, thereby defining a plurality of sub-outlets (72) in each of the plurality of outlets.

8. A generator system for converting thermal energy to electric energy comprising the apparatus of any of claims 1-7.

9. The generator system of claim 8 comprising a magnetothermal core (52) wherein said at least one outlet (L_1-L_4) of the valve apparatus is connected to said magnetothermal core, thereby

ensuring that laterally separated portions of fluid pulses in said at least one outlet are in phase when entering the thermomagnetic core (52).

10. An electric power plant comprising the generator system of claim 8 or 9.

11. Use of the apparatus of any of claims 1-7 in a method or system for producing electric power.

UNITED STATES PATENT AND TRADEMARK OFFICE

UNITED STATES DEPARTMENT OF COMMERCE
United States Patent and Trademark Office
Address: COMMISSIONER FOR PATENTS
P.O. Box 1450
Alexandria, Virginia 22313-1450
www.uspto.gov

APPLICATION NO.	FILING DATE	FIRST NAMED INVENTOR	ATTORNEY DOCKET NO.	CONFIRMATION NO.
12/916,245	10/29/2010	Gunnar Russberg	04189-P0042A	9224

24126 7590 12/30/2010
ST. ONGE STEWARD JOHNSTON & REENS, LLC
986 BEDFORD STREET
STAMFORD, CT 06905-5619

EXAMINER

ART UNIT	PAPER NUMBER
3753	

MAIL DATE	DELIVERY MODE
12/30/2010	PAPER

Please find below and/or attached an Office communication concerning this application or proceeding.

The time period for reply, if any, is set in the attached communication.

UNITED STATES PATENT AND TRADEMARK OFFICE

Commissioner for Patents
United States Patent and Trademark Office
P.O. Box 1450
Alexandria, VA 22313-1450
www.uspto.gov

ST. ONGE STEWARD JOHNSTON & REENS, LLC
986 BEDFORD STREET
STAMFORD CT 06905-5619

In re Application of	:
RUSSBERG, GUNNAR	: DECISION ON REQUEST TO
Application No. 12/916,245	: PARTICIPATE IN PATENT
Filed: Oct. 29, 2010	: PROSECUTION HIGHWAY
Attorney Docket No 04189-P0042A	: PILOT PROGRAM AND PETITION
For: VALVE APPARATUS	: TO MAKE SPECIAL UNDER
	: 37 CFR 1.102(a)

This is a decision on the request to participate in the Patent Prosecution Highway (PPH) program and the petition under 37 CFR 1.102(a), filed Dec. 29, 2010 to make the above-identified application special.

The request and petition are Granted.

A grantable request to participate in the PPH program and petition to make special require:
(1) The U.S. application must disclose an eligible relationship to one or more PCT applications filed in the JPO, EPO, KIPO or USPTO;
(2) Applicant must submit a copy of the allowable/patentable claim(s) from the PCT application(s) latest international work product (the written opinion or the IPER) along with an English translation thereof and a statement that the English translation is accurate;
(3) All the claims in the U.S. application must sufficiently correspond or be amended to sufficiently correspond to the allowable/patentable claim(s) in the PCT application(s);
(4) Examination of the U.S. application has not begun;
(5) Applicant must submit a copy of the latest international work product from the PCT application containing the allowable/patentable claim(s) along with an English translation thereof and a statement that the English translation is accurate; and
(6) Applicant must submit an IDS listing the documents cited by the PCT examiner in the international work product along with copies of documents except U.S. patents or U.S. patent application publications.

In light of the petition being properly submitted, the request to participate in the PPH program and the petition comply with the above requirements. Accordingly, the above-identified application has been accorded "special" status.

The applicant is encouraged to cite and submit all relevant prior art references, if any, to facilitate examination in this application.

All other inquiries concerning the examination or status of the application should be directed to Stephen Hepperle, the SPE of Art Unit 3753 and (571)272-4913 for Class 137/625 and also accessible in the PAIR system at http://www.uspto.gov/ebc.index.html.

All other inquiries concerning the examination or status of the application should be directed to the Patent Application Information Retrieval (PAIR) system.

Currently, the application is undergoing pre-examination processing. Upon completion, this application will be forwarded and docketed to an examiner for action on the merits commensurate with this decision.

Telephone inquiries concerning this decision should be directed to Henry C. Yuen, at 571-272-4856.

The petition is **granted.**

/Henry C. Yuen/

Henry C. Yuen, Special Programs Examiner
Technology Center 3700 – Mechanical Engineering,
Manufacturing and Products
571-272-4856

Doc Code: PET.GREEN
Document Description: Petition for Green Tech Pilot

PTO/SB/420 (03-11)

PETITION TO MAKE SPECIAL UNDER THE GREEN TECHNOLOGY PILOT PROGRAM

Attorney Docket Number: 242525-3	Application Number (if known): 12/916,258	Filing date: October 29, 2010

First Named Inventor: Robert Michael ZIRIN

Title: SEGMENTED STATOR ASSEMBLY

APPLICANT HEREBY REQUESTS TO PARTICIPATE IN THE GREEN TECHNOLOGY PILOT PROGRAM FOR THE ABOVE-IDENTIFIED APPLICATION. See Instruction Sheet on page 2.

This petition must be timely filed electronically using the USPTO electronic filing system, EFS-Web.

1. By filing this petition:

   Applicant is requesting early publication: Applicant hereby requests early publication under 37 CFR 1.219 and the publication fee set forth in 37 CFR 1.18(d) accompanies this request.

2. By filing this petition: applicant is agreeing to make an election without traverse in a telephonic interview and elect an invention that meets the eligibility requirements for the Green Technology Pilot Program, if the Office determines that the claims are not obviously directed to a single invention. See Instruction Sheet.

3. This request is accompanied by statements of special status for the eligibility requirement.

4. The application contains no more than three (3) independent claims and twenty (20) total claims.

5. The application does not contain any multiple dependent claims.

6. Other attachments: Statement Concerning the Basis for the Special Status

Signature /Allison W. Mages/	Date June 30, 2011
Name (Print/Typed) Allison W. Mages	Registration Number 57,275

Note: Signatures of all the inventors or assignees of record of the entire interest or their representative(s) are required in accordance with 37 CFR 1.33 and 11.18. Please see 37 CFR 1.4(d) for the form of the signature. If necessary, submit multiple forms for more than one signature, see below.*

☐ *Total of _____ forms are submitted.

If you need assistance in completing the form, call 1-800-PTO-9199 and select option 2.

IN THE UNITED STATES PATENT AND TRADEMARK OFFICE

First Named Inventor: Robert Michael ZIRIN	)
	)
Confirmation No.: 9239	
	)
Serial No.: 12/916,258	)
	)
Filing Date: October 29, 2010	)
	)
Atty Docket No.: 242525-3	)

Commissioner for Patents
P.O. Box 1450
Alexandria, VA 22313-1450

Statement Concerning the Basis for the Special Status

SIR:

Applicant respectfully submits that Special Status is sought on the basis that the present invention materially contributes to the development of renewable energy resources or energy conservation.

The undersigned attorney may be contacted at the number below to facilitate the resolution of any matters. Please charge any fees that are incurred in connection with this Statement to deposit account no. 09-0470.

Respectfully submitted,

General Electric Company

By : /Allison W. Mages/
Allison W. Mages
Reg. No. 57,275

Dated: June 30, 2011
GE Global Patent Operation
2 Corporate Drive, Suite 648
Shelton, CT 06484
203-944-6730

UNITED STATES PATENT AND TRADEMARK OFFICE

UNITED STATES DEPARTMENT OF COMMERCE
United States Patent and Trademark Office
Address: COMMISSIONER FOR PATENTS
P.O. Box 1450
Alexandria, Virginia 22313-1450
www.uspto.gov

APPLICATION NO.	FILING DATE	FIRST NAMED INVENTOR	ATTORNEY DOCKET NO.	CONFIRMATION NO.
12/916,258	10/29/2010	Robert Michael Zirin	242525-3	9239

6147 7590 08/01/2011
GENERAL ELECTRIC COMPANY
GLOBAL RESEARCH
ONE RESEARCH CIRCLE
BLDG. K1-3A59
NISKAYUNA, NY 12309

EXAMINER
LEUNG, QUYEN PHAN

ART UNIT	PAPER NUMBER
2834	

NOTIFICATION DATE	DELIVERY MODE
08/01/2011	ELECTRONIC

Please find below and/or attached an Office communication concerning this application or proceeding.

The time period for reply, if any, is set in the attached communication.

Notice of the Office communication was sent electronically on above-indicated "Notification Date" to the following e-mail address(es):

ldocket@crd.ge.com
wahld@ge.com
haeckl@ge.com

UNITED STATES PATENT AND TRADEMARK OFFICE

Commissioner for Patents
United States Patent and Trademark Office
P.O. Box 1450
Alexandria, VA 22313-1450
www.uspto.gov

GENERAL ELECTRIC COMPANY
GLOBAL RESEARCH
ONE RESEARCH CIRCLE
BLDG. K1-3A59
NISKAYUNA NY 12309

In re Application of	:	
ZIRIN et al.	:	DECISION ON PETITION
Application No. 12/916,258	:	TO MAKE SPECIAL UNDER
Filed: October 29, 2010	:	THE GREEN TECHNOLOGY
Attorney Docket No. 242525-3	:	PILOT PROGRAM

This is a decision on the petition under 37 CFR 1.102, filed on July 05, 2011, to make the above-identified application special under the pilot program for applications pertaining to Green Technologies as set forth 74 Federal Register Notice 64666 (December 8, 2009) and amended by 75 Federal Register Notice 28554 (May 21, 2010) and 75 Federal Register Notice 69049 (November 10, 2010).

The petition is **DISMISSED**.

If reconsideration of this decision is desired, a petition for reconsideration must be filed within ONE (1) MONTH OR THIRTY (30) DAYS from the mail date of this decision, whichever is longer. No extension of this time limit can be granted under 37 CFR 1.136(a) or (b). The petition for reconsideration should include an exhaustive attempt to provide the lacking item(s) noted below, since, after a decision on the petition for reconsideration, no further reconsideration or review of the matter will be undertaken by the Director.

A grantable petition to make an application special under 37 CFR 1.102 and the pilot program as set forth in 74 FR 64666 must be directed to a nonprovisional application filed under 35 USC 111(a) or be a national stage entry under 35 USC 371, exclusive of any reissue applications and be filed prior to the date of the notice, December 8, 2009.

In order to qualify for special status, the following requirements must be met. 1) The application must have no more than 3 independent claims and no more than 20 total claims. 2) The application must not contain any multiple dependent claims. 3) The petition must state the basis for seeking special status, i.e., the claimed invention either: A) materially enhances the quality of the environment or B) materially contributes to: i) the discovery or development of renewable energy resources, ii) the more efficient utilization and conservation of energy resources, or iii) greenhouse gas emission reduction. 4) If the disclosure is not clear on its face that the claimed invention materially contributes under category (A) or (B), the petition must be accompanied by

a statement by the applicant, assignee, or an attorney/agent registered to practice before the Office explaining how the materiality standard is met. 5) A statement that applicant will agree to make an election without traverse in a telephonic interview if a restriction requirement is made by the examiner. 6) The petition to make special must be filed electronically. 7) The petition must be filed at least one day prior to the date that a first Office Action appears in the Patent Application Information Retrieval (PAIR) system. 8) The petition must be accompanied by a request for early publication in compliance with 37 CFR 1.219 and include the publication fee as set forth in 37 CFR 1.18(d).

The requirement for a fee for consideration of the petition to make special for applications pertaining to Green Technologies has been waived.

The petition lacks item 4.

In regard to item 4, applicant's statement pertaining to how the materiality standard is met does not satisfy the requirements for this pilot. The petition alleges that the claimed invention contributes to the development of renewable energy resources. The claims are not directed to renewable energy resources. The materiality standard does not permit an applicant to speculate as to how a hypothetical end-user might specially apply the invention in a manner that could contribute to the discovery or development of renewable energy resources. Any argument that the claimed invention can be used with renewable energy resources is considered speculative as to how a hypothetical end-user might specially apply the claimed invention.

Any reconsideration of this decision should be submitted through the USPTO electronic filing system, EFS-Web, and selecting the document description of "Petition for Green Tech Pilot" on the EFS-Web screen.

Telephone inquiries concerning this decision should be directed to Colleen Dunn at 571-272-1170.

The application is being forwarded to the appropriate Technology Center Art Unit for action in its regular turn.

/Colleen Dunn/

Colleen Dunn
Quality Assurance Specialist
Technology Center 2800

IN THE UNITED STATES PATENT AND TRADEMARK OFFICE

First Named Inventor: Robert Michael ZIRIN	)
Confirmation No.: 9239	)
	)
Serial No.: 12/916,258	)
	)
Filing Date: 10-29-2010	)
	)
Atty Docket No.: 242525-3	)

Commissioner for Patents
P.O. Box 1450
Alexandria, VA 22313-1450

Request for Reconsideration

SIR:

This is responsive to the Decision on Petition, dated as mailed 1 August 2011, in the above-referenced application.

Applicant respectfully requests reconsideration of Applicant's Petition to Make Special on the basis that the present invention materially contributes to the development of renewable energy resources or energy conservation.

The Decision to Make Special Under the Green Technology Pilot Program (hereinafter "the Decision") alleges that the claims are not directed to renewable energy resources and that any argument that the claimed invention can be used with renewable energy resources is considered speculative as to how a hypothetical end-user might specially apply the claimed invention. Applicant does not agree with the comments made in the Decision.

Applicant respectfully submits that the present application is a continuation-in-part of co-pending U.S. patent application serial number 12/871,276, entitled "SEGMENTED STATOR ASSEMBLY," filed on August 30, 2010. The Examiner granted U.S. Nonprovisional Application Serial No. 12/871,276 special status as the Examiner recognized it as an application

pertaining to Green Technologies as set forth in 74 Federal Register Notice 6466 and amended by 75 Federal Register Notice 28554.

Applicant respectfully submits that the use of the claimed invention with a wind turbine is not merely speculative as to how a hypothetical end-user might specially apply the claimed invention. Applicant respectfully submits that the present invention is generally directed to wind turbines and, more particularly, to a wind turbine with a segmented stator. Figure 1of the application, for example, illustrates a wind turbine having a stator assembly according to an exemplary embodiment of the invention.

While wind power is considered one of the cleanest, most environmentally friendly energy sources presently available, the availability of wind energy as a viable power generating option heavily depends on the cost/benefit economics of wind energy. As such, it is important that the cost of producing the energy, including the costs of transportation and installation of the wind turbines, cannot outweigh the benefits.

Offshore wind turbines typically have ratings of 3MW and higher, necessitated by the economics of wind energy production. Also offshore turbines employ a direct drive generator to improve reliability, unlike most land based utility scale wind turbines that utilize a geared generator. These ratings and the fact that the generator is directly driven manifests into a very large size and weight. A machine greater than 4m in diameter is difficult and costly to transport by conventional means and necessitates segmentation. Alternatively, a 3MW machine could be made within a 4m diameter limit by making it axially longer or utilizing a double-sided configuration. Both of these options present challenges. An axially longer machine weighs significantly more than a shorter length larger diameter machine whereas a double-sided configuration presents significant

manufacturing complexity. While the segmented stator structures facilitate cost and transport, particularly when designed to accommodate conventional rail or road shipping constraints, they are difficult to manufacture and assemble at site. (see at least paragraphs [0003]-[0004]). When factors such as the cost of transportation and complexity of manufacture of conventional stators increase the expense of operating a wind turbine site, the cost/benefit economics of wind energy is negatively impacted, decreasing the likelihood that wind energy will become widely adopted.

The embodiments disclosed herein provide a segmented stator assembly that includes stator segments that provide for more cost effective shipping and installation while maintaining the strength and structural integrity of the large assemblies to achieve desired performance requirements. As such, embodiments of the present invention reduce transportation and installation costs which increases the availability of wind energy as a viable power generating option. Furthermore, embodiments of the present invention achieve these costs reductions without sacrificing the efficient performance or the requisite structural integrity of the wind turbine. As such, embodiments of the present invention materially contribute to the development of renewable energy.

The undersigned attorney may be contacted at the number below to facilitate the resolution of any matters. Please charge any fees that are incurred in connection with this Statement to deposit account no. 09-0470.

Respectfully submitted,

General Electric Company

By : /Allison W Mages/
Allison Weiner Mages
Reg. No. 57,275

Dated: August 31, 2011

GE Global Patent Operation
2 Corporate Drive, Suite 648
Shelton, CT 06484
203-944-6730

UNITED STATES PATENT AND TRADEMARK OFFICE

UNITED STATES DEPARTMENT OF COMMERCE
United States Patent and Trademark Office
Address: COMMISSIONER FOR PATENTS
P.O. Box 1450
Alexandria, Virginia 22313-1450
www.uspto.gov

APPLICATION NO.	FILING DATE	FIRST NAMED INVENTOR	ATTORNEY DOCKET NO.	CONFIRMATION NO.
12/916,258	10/29/2010	Robert Michael Zirin	242525-3	9239

6147 7590 09/29/2011
GENERAL ELECTRIC COMPANY
GLOBAL RESEARCH
ONE RESEARCH CIRCLE
BLDG. K1-3A59
NISKAYUNA, NY 12309

EXAMINER
LEUNG, QUYEN PHAN

ART UNIT	PAPER NUMBER
2834	

NOTIFICATION DATE	DELIVERY MODE
09/29/2011	ELECTRONIC

Please find below and/or attached an Office communication concerning this application or proceeding.

The time period for reply, if any, is set in the attached communication.

Notice of the Office communication was sent electronically on above-indicated "Notification Date" to the following e-mail address(es):

ldocket@crd.ge.com
wahld@ge.com
haeckl@ge.com

UNITED STATES PATENT AND TRADEMARK OFFICE

Commissioner for Patents
United States Patent and Trademark Office
P.O. Box 1450
Alexandria, VA 22313-1450
www.uspto.gov

GENERAL ELECTRIC COMPANY
GLOBAL RESEARCH
ONE RESEARCH CIRCLE
BLDG. K1-3A59
NISKAYUNA NY 12309

9/29/11

In re Application of	:	
Zirin et al.	:	DECISION ON PETITION
Application No. 12/916,258	:	TO MAKE SPECIAL UNDER
Filed: 10/29/2010	:	THE GREEN TECHNOLOGY
Attorney Docket No. **242525-3**	:	PILOT PROGRAM

This is a decision on the request for reconsideration, filed 8/30/2011, to make the above-identified application special under the pilot program for applications pertaining to Green Technologies as set forth in 74 Federal Register Notice 64666 (December 8, 2009) and amended by 75 Federal Register Notice 28554 (May 21, 2010) and 75 Federal Register Notice 69049 (November 10, 2010).

The petition is **GRANTED**.

A grantable petition to make an application special under 37 CFR 1.102 and the pilot program as set forth in 74 FR 64666 must be directed to a nonprovisional application filed under 35 USC 111(a) or be a national stage entry under 35 USC 371, exclusive of any reissue applications.

In order to qualify for special status, the following requirements must be met. 1) The application must have no more than 3 independent claims and no more than 20 total claims. 2) The application must not contain any multiple dependent claims. 3) The petition must state the basis for seeking special status, i.e., the claimed invention either: A) materially enhances the quality of the environment or B) materially contributes to: i) the discovery or development of renewable energy resources, ii) the more efficient utilization and conservation of energy resources, or iii) greenhouse gas emission reduction. 4) If the disclosure is not clear on its face that the claimed invention materially contributes under category (A) or (B), the petition must be accompanied by a statement by the applicant, assignee, or an attorney/agent registered to practice before the Office explaining how the materiality standard is met. 5) A statement that applicant will agree to make an election without traverse in a telephonic interview if a restriction requirement is made by the examiner. 6) The petition to make special must be filed electronically. 7) The petition must be filed at least one day prior to the date that a first Office Action appears in the Patent Application Information Retrieval (PAIR) system. 8) The petition must be accompanied by a

request for early publication in compliance with 37 CFR 1.219 and include the publication fee as set forth in 37 CFR 1.18(d).

The requirement for a fee for consideration of the petition to make special for applications pertaining to Green Technologies has been waived.

The instant petition complies with items 1 – 8 above. Accordingly, the above-identified application has been accorded "special" status.

Telephone inquires concerning this decision should be directed to Tom Dunn at 571-272-1171.

The application is being forwarded to the Technology Center Art Unit 2834 for action on the merits commensurate with this decision.

/Tom Dunn/

Tom Dunn
Quality Assurance Specialist
Technology Center 1700

UNITED STATES PATENT AND TRADEMARK OFFICE

Commissioner for Patents
United States Patent and Trademark Office
P.O. Box 1450

MAILED
JAN 31 2012
OFFICE OF PETITIONS

KNOBBE MARTENS OLSON & BEAR LLP
2040 MAIN STREET
FOURTEENTH FLOOR
IRVINE CA 92614

In re Application of	: DECISION ON REQUEST TO
Hiroaki ITAKURA	: PARTICIPATE IN PPH PROGRAM
Application No. 12/916,260	: AND PETITION TO MAKE SPECIAL
Filed: October 29, 2010	: UNDER 37 CFR 1.102(a)
Atty. Docket No.: SUTOSH.713AUS	:
For: ELECTRONIC APPARATUS	

This is a decision on the request to participate in the Patent Prosecution Highway (PPH) program and the petition under 37 CFR 1.102(a), filed December 6, 2011 to make the above-identified application special.

The petition is **GRANTED**.

A grantable request to participate in the PPH (patent prosecution highway) program and petition to make special require:

(1) the U.S. application is a Paris Convention application which either validly claims priority under 35 U.S.C. 119(a) and 37 CFR 1.55 to one or more applications filed in the JPO (Japanese Patent Office) or claims priority to a PCT application that contains no priority claims. Alternatively, it can be a national stage application under the PCT which validly claims priority to an application filed in the JPO or claims priority to a PCT application that contains no priority claims. It can also be a "bypass application" filed under 35 U.S.C. 111(a) which validly claims benefit under 35 U.S.C. 120 to a PCT application, which PCT application validly claims priority to an application filed in the JPO or claims priority to a PCT application that contains no priority claims, or contains no priority claim;

(2) applicant must submit a copy of the allowable/patentable claim(s) from the JPO application(s) along with an English translation thereof and a statement that the English translation is accurate;

(3) all the claims in the U.S. application must sufficiently correspond or be amended to sufficiently correspond to the allowable/patentable claim(s) in the JPO application(s);

(4) examination of the U.S. application has not begun;

(5) applicant must submit a copy of all the office actions from each of the JPO application(s) containing the allowability/patentable claim(s) along with an English translation thereof and a statement that the English translation is accurate; and

(6) applicant must submit an IDS listing the documents cited by the JPO examiner in the JPO office action along with copies of documents except U.S. patents or U.S. patent application publications.

The request to participate in the PPH program and petition comply with the above requirements. Accordingly, the above-identified application has been accorded "special" status.

Telephone inquiries concerning this decision should be directed to Robert DeWitty, Petition Attorney, Office of Petitions at 571-272-8427.

This application will be forwarded to Technology Center Art Unit 2835 for action commensurate with this decision.

Thurman K. Page

David Bucci
Petitions Examiner
Office of Petitions

UNITED STATES PATENT AND TRADEMARK OFFICE

Commissioner for Patents
United States Patent and Trademark Office
P.O. Box 1450
Alexandria, VA 22313-1450
www.uspto.gov

Thompson Patent Law Offices PC
4205 Lancaster Lane North
Suite 104
Plymouth MN 55441

MAILED

SEP 09 2011

OFFICE OF PETITIONS

In re Application of :
Zdenko Grajcar :
Application No. 12/916,313 :
Filed: October 29, 2009 :
Attorney Docket No. 12-12 :

DECISION ON PETITION
TO WITHDRAW
FROM RECORD

This is a decision on the Request to Withdraw as attorney or agent of record under 37 C.F.R. § 1.36(b), filed September 7, 2011.

The request is **not approved. Request is moot.**

The Office will no longer approve requests from practitioners to withdraw from applications where the requesting practitioner is acting, or has acted, in a representative capacity pursuant to 37 CFR 1.34. In these situations, the practitioner is responsible for the correspondence the practitioner files in the application while acting in a representative capacity. As such, there is no need for the practitioner to obtain the Office's permission to withdraw from representation. However, practitioners acting in a representative capacity, like practitioners who have a power of attorney in the application, remain responsible for noncompliance with 37 CFR 1.56, as well as 37 CFR 10.18, with respect to documents they file.

A review of the file record indicates that Craige Thompson and all attorneys/agents associated with customer number 88145 do not have power of attorney, but has acted in a representative capacity in this patent application. See 37 C.F.R. § 10.40. Accordingly, the request to withdraw under 37 C.F.R. § 1.36(b) is not applicable.

The correspondence address has been changed and is copied below.

Telephone inquires concerning this decision should be directed to the undersigned at 571-272-4618

/Kimberly Inabinet/

Kimberly Inabinet
Petitions Examiner
Office of Petitions

cc: Zdenko Grajcar
5455 Highway 169 North
Plymouth, MN 55442

UNITED STATES PATENT AND TRADEMARK OFFICE

Commissioner for Patents
United States Patent and Trademark Office
P.O. Box 1450
Alexandria, VA 22313-1450
www.uspto.gov

KILPATRICK TOWNSEND & STOCKTON LLP
TWO EMBARCADERO CENTER
EIGHTH FLOOR
SAN FRANCISCO, CA 94111-3834

MAILED
MAR 22 2011
OFFICE OF PETITIONS

In re Application of	:	
Markwort et al.	:	Decision Notifying Applicant the
Application No. 12/916,315	:	Application Has Been Accorded
Filed: October 29, 2010	:	Status Under 37 CFR 1.47(a)
Attorney Docket No. 26017D-002720US	:	

This is a decision responding to papers filed October 29, 2010, which are being treated in part, as a request for the instant application to be accorded status under 37 CFR 1.47(a).

The request is **granted**.

When an application is a continuation or divisional of a prior application, which was accorded status under 37 CFR 1.47, a party may obtain status under 37 CFR 1.47 by submitting a copy of the declaration from the parent application and a copy of the parent application's Rule 47 decision letter. *See* 37 CFR 1.63(d)(3).

The instant application is a continuation of Application No. 12/715,246, which was accorded status under 37 CFR 1.47(a), and the instant application includes copies of the declaration and Rule 47(a) decision from the prior application. Therefore, the application is hereby accorded Rule 1.47(a) status.

Technology Center Art Unit 2886 will be informed of the instant decision and the application will be examined in due course.

Telephone inquiries regarding this communication should be directed to Petitions Attorney Steven Brantley at (571) 272-3203.

Charles Steven Brantley
Petitions Attorney
Office of Petitions

Doc Code: PET.AUTO **Document Description: Petition automatically granted by EFS-Web**	PTO/SB/83 U.S. Patent and Trademark Office Department of Commerce

Electronic Petition Request	**REQUEST FOR WITHDRAWAL AS ATTORNEY OR AGENT AND CHANGE OF CORRESPONDENCE ADDRESS**
Application Number	12916325
Filing Date	29-Oct-2010
First Named Inventor	Brent WILTSHIRE
Art Unit	3779
Examiner Name	MATTHEW KASZTEJNA
Attorney Docket Number	USGINZ00121
Title	ENDOLUMINAL TOOL DEPLOYMENT SYSTEM

◉ Please withdraw me as attorney or agent for the above identified patent application and the practitioners of record associated with Customer Number: 40518

The reason(s) for this request are those described in 37 CFR:

10.40(b)(4)

Certifications

☒ I/We have given reasonable notice to the client, prior to the expiration of the response period, that the practitioner(s) intend to withdraw from employment

☒ I/We have delivered to the client or a duly authorized representative of the client all papers and property (including funds) to which the client is entitled

☒ I/We have notified the client of any responses that may be due and the time frame within which the client must respond

Change the correspondence address and direct all future correspondence to the first named inventor or assignee that has properly made itself of record pursuant to 37 CFR 3.71:

Name	USGI Medical, Inc.
Address	1140 Calle Cordillera
City	San Clemente
State	CA
Postal Code	92673
Country	US

I am authorized to sign on behalf of myself and all withdrawing practitioners.	
Signature	/Johney U. Han/
Name	Johney U. Han
Registration Number	45565

UNITED STATES PATENT AND TRADEMARK OFFICE

Commissioner for Patents
United States Patent and Trademark Office
P.O. Box 1450
Alexandria, VA 22313-1450
www.uspto.gov

Decision Date : October 7,2011

In re Application of :

Brent WILTSHIRE

Application No : 12916325

Filed : 29-Oct-2010

Attorney Docket No : USGINZ00121

DECISION ON REQUEST TO WITHDRAW AS ATTORNEY/AGENTOF RECORD

This is an electronic decision on the Request to Withdraw as attorney or agent of record under 37 CFR § 1.36(b), filed October 7,2011

The request is **APPROVED.**

The request was signed by Johney U. Han (registration no. 45565) on behalf of all attorneys/agents associated with Customer Number 40518 . All attorneys/agents associated with Cusotmer Number 40518 have been withdrawn.

Since there are no remaining attorneys of record, all future communications from the Office will be directed to the first named inventor or assignee that has properly made itself of record pursuant to 37 CFR 3.71, with correspondence address:

Name	USGI Medical, Inc.
Name2	
Address 1	1140 Calle Cordillera
Address 2	
City	San Clemente
State	CA
Postal Code	92673
Country	US

As a reminder, requester is required to inform the first named inventor or assignee that has properly made itself of record pursuant to 37 CFR 3.71 of the electronically processed petition.

Telephone inquiries concerning this decision should be directed to the Patent Electronic Business Center (EBC) at 866-217-9197.

Office of Petitions

UNITED STATES PATENT AND TRADEMARK OFFICE

Commissioner for Patents
United States Patent and Trademark Office
P.O. Box 1450
Alexandria, VA 22313-1450
www.uspto.gov

TOWNSEND AND TOWNSEND AND CREW, LLP
TWO EMBARCADERO CENTER
EIGHTH FLOOR
SAN FRANCISCO CA 94111-3834

MAILED

JAN 11 2011

OFFICE OF PETITIONS

In re Application of	:	ON PETITION
Markwort, et al.	:	
Application No. 12/916,336	:	
Filed: October 29, 2010	:	
Attorney Docket No. 26017D-002730US	:	

This is in response to the petition under 37 CFR 1.47(a), filed October 29, 2010.

The petition is **GRANTED.**

Petitioners have submitted a copy of the declaration filed in Application No.12/715,246, of which the instant filing is a continuation application. A decision, mailed on September 8, 2010, granted Rule § 1.47 status to Application No. 12/715,246.

Pursuant to 37 CFR 1.63(d), petitioners have obtained Rule § 1.47 status in the present application.

No petition fee is due in connection with this matter.

The Office will not forward notice of this application's filing to the non-signing inventor because notice regarding the filing of the previous application was given.

After the mailing of this decision, the application will be referred to Technology Center A.U. 2886 for examination in due course.

Telephone inquiries regarding this decision should be directed to the undersigned at (571) 272-3230.

Shirene Willis Brantley
Senior Petitions Attorney
Office of Petitions

UNITED STATES PATENT AND TRADEMARK OFFICE

Commissioner for Patents
United States Patent and Trademark Office
P.O. Box 1450
Alexandria, VA 22313-1450
www.uspto.gov

KILPATRICK TOWNSEND & STOCKTON LLP
TWO EMBARCADERO CENTER
EIGHTH FLOOR
SAN FRANCISCO CA 94111-3834

MAILED
MAR 07 2012
OFFICE OF PETITIONS

In re Application of :
Markwort et al. :
Application Number: 12/916,336 : NOTICE
Filing or 371(c) Date: October 29, 2010 :
Attorney Docket Number: 92402-801314 :
(002730US)

This is a notice regarding your request for acceptance of a fee deficiency submission under 37 CFR 1.28(c), filed on February 7, 2012.

The Office no longer investigates or rejects original or reissue patent under 37 CFR 1.56. **1098 Off. Gaz. Pat. Office 502 (January 3, 1989)**. Therefore, nothing in this Notice is intended to imply that an investigation was done.

Your fee deficiency submission under 37 CFR 1.28(c) is hereby **ACCEPTED**.

This patent is no longer entitled to small entity status. Accordingly, all future fees paid in this patent must be paid at the large entity rate.

Inquiries related to this communication should be directed to the undersigned at (571) 272-3230.

Shirene Willis Brantley
Attorney
Office of Petitions

UNITED STATES PATENT AND TRADEMARK OFFICE

Commissioner for Patents
United States Patent and Trademark Office
P.O. Box 1450
Alexandria, VA 22313-1450
www.uspto.gov

MORRISON & FOERSTER LLP
755 PAGE MILL ROAD
PALO ALTO CA 94304-1018

MAILED

DEC 07 2010

OFFICE OF PETITIONS

In re Application of :
Harrihar A. PERSHADSINGH :
Application No. 12/916,337 : DECISION ON PETITION
Filed: October 29, 2010 : TO MAKE SPECIAL UNDER
Attorney Docket No. 421842000406 : 37 CFR 1.102(c)(1)
:

This is a decision on the petition under 37 CFR 1.102(c)(1), filed November 2, 2010, to make the above-identified application special based on applicant's health as set forth in M.P.E.P. § 708.02, Section III.

The petition is **GRANTED**.

A grantable petition to make an application special under 37 CFR 1.102(c)(1) and MPEP § 708.02, Section III: Applicant's Health, must be accompanied by evidence showing such as a doctor's certificate or other medical certificate that the state of health of the applicant is such that he or she might not be available to assist in the prosecution of the application if it were to run its normal course. No fee is required

The instant petition includes a doctor's certificate. Accordingly, the above-identified application has been accorded "special" status.

Telephone inquiries concerning this decision should be directed to the undersigned at (571) 272-6735.

All other inquiries concerning either the examination or status of the application should be directed to the Technology Center.

The application is being forwarded to the Technology Center Art Unit 1628 for action on the merits commensurate with this decision.

/Diane C. Goodwyn/
Diane C. Goodwyn
Petitions Examiner
Office of Petitions

UNITED STATES PATENT AND TRADEMARK OFFICE

Commissioner for Patents
United States Patent and Trademark Office
P.O. Box 1450

MAILED
MAY 16 2011
OFFICE OF PETITIONS

INGRASSIA FISHER & LORENZ, P.C. (GME)
7010 E. COCHISE ROAD
SCOTTSDALE AZ 85253

In re Application of	:	
Massimiliano MELIS et al.	:	ON PETITION
Application No. 12/916,391	:	
Filed: October 29, 2010	:	
Atty. Docket No.: 060.0411US	:	

This is in response to the petition under 37 CFR 1.47(a), filed April 5, 2011.

The petition is **DISMISSED**.

Rule 47 applicant is given TWO (2) MONTHS from the mailing date of this decision to reply, correcting the below-noted deficiencies. Any reply should be entitled "Request for Reconsideration of Petition Under 37 CFR 1.47(a)," and should only address the deficiencies noted below, except that the reply may include an oath or declaration executed by the non-signing inventor. **FAILURE TO RESPOND WILL RESULT IN ABANDONMENT OF THE APPLICATION**. Any extension of time will be governed by 37 CFR 1.136(a).

A grantable petition under 37 CFR 1.47(a) requires:

> (1) proof that the non-signing inventor cannot be reached after diligent effort or refuses to sign the oath or declaration after having been presented with the application papers (specification, claims, and drawings);
> (2) an acceptable oath or declaration in compliance with 35 U.S.C. §§ 115 and 116;
> (3) the petition fee; and
> (4) a statement of the last known address of the non-signing inventor;

The petition lacks item (1), (2), and (4).

Regarding item (1), petitioner asserts that the non-signing inventor Mr. Paolo Zamboni has stated he cannot sign the declaration. Specifically, with reference to the Declaration of Francene E. Stewart, it is asserted that non-signing inventor P. Zamboni has set forth a refusal to sign the declaration in two emails. However, copies of the emails have not been provided as evidence.

Rule 47 applicant must demonstrate with documented evidence that where there is an express or oral refusal, that fact, along with the time and place of the refusal, must be stated in an affidavit or declaration by the party to whom the refusal was made. Where there is a written refusal, a copy of the document evidencing that refusal must be made part of the affidavit or declaration.

When it is included by the rule 47 application that an omitted inventor's conduct constitutes a refusal, all facts upon which that a conclusion is based should be stated in an affidavit or declaration. If there is documentary evidence to support facts alleged in the affidavit or declaration, such evidence must be submitted.

Whenever an omitted inventor gives a reason for refusing to sign the application oath or declaration, that reason should be stated in the affidavit or declaration.

Regarding item (2), petitioner has provided a declaration wherein the signature line for non-signing inventor P. Zamboni has not been signed by another inventor or authorized practitioner. Accordingly, the declaration is deemed improper.

Regarding item (4), petitioner has failed to include a statement of the last known address of non-signing inventor P. Zamboni.

Further correspondence with respect to this matter should be addressed as follows:

By Mail: Mail Stop PETITION
Commissioner for Patents
P. O. Box 1450
Alexandria, VA 22313-1450

By hand: U. S. Patent and Trademark Office
Customer Service Window, Mail Stop Petitions
Randolph Building
401 Dulany Street
Alexandria, VA 22314

The centralized facsimile number is **(571) 273-8300.**

Telephone inquiries relating to this decision should be directed to Robert DeWitty (571-272-8427).

Anthony Knight
Director
Office of Petitions

UNITED STATES PATENT AND TRADEMARK OFFICE

Commissioner for Patents
United States Patent and Trademark Office
P.O. Box 1450

MAILED
AUG 04 2011
OFFICE OF PETITIONS

INGRASSIA FISHER & LORENZ, P.C. (GME)
7010 E. COCHISE ROAD
SCOTTSDALE AZ 85253

In re Application of	:	
Massimiliano MELIS et al.	:	ON PETITION
Application No. 12/916,391	:	
Filed: October 29, 2010	:	
Atty. Docket No.: 060.0411US	:	

This is in response to the renewed petition under 37 CFR 1.47(a), filed June 9, 2011.

The petition is **DISMISSED**.

Rule 47 applicant is given TWO (2) MONTHS from the mailing date of this decision to reply, correcting the below-noted deficiencies. Any reply should be entitled "Request for Reconsideration of Petition Under 37 CFR 1.47(a)," and should only address the deficiencies noted below, except that the reply may include an oath or declaration executed by the non-signing inventor. **FAILURE TO RESPOND WILL RESULT IN ABANDONMENT OF THE APPLICATION**. Any extension of time will be governed by 37 CFR 1.136(a).

A grantable petition under 37 CFR 1.47(a) requires:

> (1) proof that the non-signing inventor cannot be reached after diligent effort or refuses to sign the oath or declaration after having been presented with the application papers (specification, claims, and drawings);
> (2) an acceptable oath or declaration in compliance with 35 U.S.C. §§ 115 and 116;
> (3) the petition fee; and
> (4) a statement of the last known address of the non-signing inventor;

The petition lacks item (4).

Regarding item (4), petitioner has failed to include a statement of the last known address of non-signing inventor P. Zamboni.

Further correspondence with respect to this matter should be addressed as follows:

By Mail: Mail Stop PETITION
Commissioner for Patents
P. O. Box 1450
Alexandria, VA 22313-1450

By hand: U. S. Patent and Trademark Office
Customer Service Window, Mail Stop Petitions
Randolph Building
401 Dulany Street
Alexandria, VA 22314

The centralized facsimile number is **(571) 273-8300.**

Telephone inquiries relating to this decision should be directed to Robert DeWitty (571-272-8427).

Rajneesh Krishnamurthy

for Anthony Knight
Director
Office of Petitions

UNITED STATES PATENT AND TRADEMARK OFFICE

Commissioner for Patents
United States Patent and Trademark Office
P.O. Box 1450

INGRASSIA FISHER & LORENZ, P.C. (GME)
7010 E. COCHISE ROAD
SCOTTSDALE AZ 85253

MAILED
OCT 12 2011
OFFICE OF PETITIONS

In re Application of	:	
Massimiliano MELIS et al.	:	ON PETITION
Application No. 12/916,391	:	
Filed: October 29, 2010	:	
Atty. Docket No.: 060.0411US	:	

This is in response to the renewed petition under 37 CFR 1.47(a), filed October 3, 2011.

The petition is **GRANTED.**

A grantable petition under 37 CFR 1.47(a) requires:

> (1) proof that the non-signing inventor cannot be reached after diligent effort or refuses to sign the oath or declaration after having been presented with the application papers (specification, claims, and drawings);
> (2) an acceptable oath or declaration in compliance with 35 U.S.C. §§ 115 and 116;
> (3) the petition fee; and
> (4) a statement of the last known address of the non-signing inventor;

Petitioner has shown that the non-signing inventor Paolo Zamboni cannot be found or refuses to sign the oath or declaration after having been presented with the application papers. The application and papers have been received and found in compliance with 37 CFR 1.47(a). This application is hereby accorded Rule 47 status.

As provided in 37 CFR 1.47(c), this Office will forward notice of this application's filing to the non-signing inventor at the address given in that petition. Notice of the filing of this application will be published in the Official Gazette.

Telephone inquiries relating to this decision should be directed to Robert DeWitty, Petitions Attorney, Office of Petitions (571-272-8427).

The application will be referred to Office of Patent Application Processing for further processing.

Ramesh Krishnamurthy

for Anthony Knight
Director
Office of Petitions

UNITED STATES PATENT AND TRADEMARK OFFICE

Commissioner for Patents
United States Patent and Trademark Office
P.O. Box 1450

Paolo Zamboni
Via Da Verazzano 31
10129 Torino
ITALY

MAILED
OCT 12 2011
OFFICE OF PETITIONS

In re Application of
Massimiliano Melis, Matteo Allasia, Vincenzo Rampino, and Paolo Zamboni
Application No. 12/916,391
Filed: October 29, 2010
For: METHOD FOR ESTIMATING FUEL INJECTING PRESSURE

Dear Mr. Zamboni:

You are named as joint inventor in the above-identified United States patent application, filed under the provisions of 35 USC 116 (United States Code), and 37 CFR 1.47(a), Rules of Practice in Patent Cases. Should a patent be granted on the application, you will be designated therein as a joint inventor.

As a named inventor you are entitled to inspect any paper in the file wrapper of the application, order copies of all or any part thereof (at a prepaid cost per 37 CFR 1.19) or make your position of record in the application. Alternatively, you may arrange to do any of the preceeding through a registered patent attorney or agent presenting written authorization from you. If you care to join the application, counsel of record (see below) would presumably assist you. Joining the application would entail the filing of an appropriate oath or declaration by you pursuant to 37 CFR 1.63.

Telephone inquiries regarding this communication should be directed to Robert DeWitty at (571) 272-8427. Requests for information regarding your application should be directed to the File Information Unit at (703) 308-2733. Information regarding how to pay for and order a copy of the application, or a specific paper in the application, should be directed to the Certification Division at (571) 272-3150 or 1 (800) 972-6382 (outside the Washington, DC area).

for Ramesh Krishnamurthy
Anthony Knight
Director
Office of Petitions

cc: **INGRASSIA FISHER & LORENZ, P.C. (GME)**
7010 E. COCHISE ROAD
SCOTTSDALE AZ 85253

UNITED STATES PATENT AND TRADEMARK OFFICE

Commissioner for Patents
United States Patent and Trademark Office
P.O. Box 1450
Alexandria, VA 22313-1450
www.uspto.gov

MAILED

OCT 03 2011

OFFICE OF PETITIONS

LAURENCE C. BONAR
917 LOGAN ST
PORT TOWNSEND WA 98368-2337

In re Application of
Shannon, et al.
Application No. 12/916,413
Filed: October 29, 2010
Atty. Dkt. No.: FS-02/ 406.10P3

: DECISION ON PETITION

This decision is in response to the petition to withdraw the holding of abandonment under 37 CFR 1.181 filed September 27, 2011.

This application was held abandoned for failure to timely submit a proper reply to the Notice to File Corrected Application Papers (Notice) mailed November 12, 2010. The Notice set a two month shortened statutory period of time for reply. Notice of Abandonment was mailed July 26, 2011.

Petitioners argue that a proper response to the Notice was timely submitted on January 10, 2011 and have provided a copy of the reply.

Review of Office records reveals that the response received at the USPTO on January 10, 2011 while intended for instant application referenced U.S. App. No. 10/916,413. As a result of applicants' error, the application was held abandoned. However, a review of the reply reveals that it contained sufficient identifiers to associate it with the correct application.

Correspondence directed to the Patent and Trademark Office concerning a previously filed application for a patent must identify the application number and filing date assigned to that application by the Office. See, 37 CFR 1.5(a). In the above-referenced application, applicant failed to correctly identify the application by citing an incorrect application number in the response. The Office elects, in this instance, to treat applicants' error as a correctable minor error as permitted under MPEP 502. However, applicants are reminded that minor errors, such as occurred in the instant application, are to be avoided in the future by the careful review of correspondence prior to submission to the Office.

In view of the evidence thereof, the petition to withdraw the holding of abandonment is hereby GRANTED.

The Notice of Abandonment is hereby VACATED and the holding of abandonment is WITHDRAWN.

This application is being forwarded to the Office of Patent Application Processing for further processing.

Telephone inquiries concerning this matter may be directed to the undersigned at (571) 272-3205.

/ALESIA M. BROWN/

Alesia M. Brown
Attorney Advisor
Office of Petitions

UNITED STATES PATENT AND TRADEMARK OFFICE

Commissioner for Patents
United States Patent and Trademark Office
P.O. Box 1450
Alexandria, VA 22313-1450
www.uspto.gov

JACKSON & CO., LLP
6114 LA SALLE AVENUE
#507
OAKLAND CA 94611-2802

MAILED

DEC 15 2010

OFFICE OF PETITIONS

In re Application of	:	
Feldman et al.	:	
Application No. 12/916,481	:	ON PETITION
Filed: October 29, 2010		
Attorney Docket No. TS-02-185	:	
	:	

This is a decision on the petition under 37 CFR 1.102(c)(1), filed October 29, 2010, to make the above-identified application special based on applicant's age as set forth in M.P.E.P. § 708.02, Section IV.

The petition is **GRANTED**.

A grantable petition to make an application special under 37 CFR 1.102(c)(1) and MPEP § 708.02, Section IV: Applicant's Age must be accompanied by evidence showing that at least one of the applicants is 65 years of age, or more, such as a birth certificate or a statement by applicant. No fee is required

The instant petition includes a statement (PTO/SB/130 form) by the applicant's attorney that applicant is 65 years of age. Accordingly, the above-identified application has been accorded "special" status.

Telephone inquiries concerning this decision should be directed to the undersigned at 571-272-7751. All other inquiries concerning either the examination or status of the application should be directed to the Technology Center.

The application is being referred to the Office of Patent Application Processing for further processing in accordance with this decision on petition.

Joan Olszewski
Petitions Examiner
Office of Petitions

UNITED STATES PATENT AND TRADEMARK OFFICE

UNITED STATES DEPARTMENT OF COMMERCE
United States Patent and Trademark Office
Address: COMMISSIONER FOR PATENTS
P.O. Box 1450
Alexandria, Virginia 22313-1450
www.uspto.gov

APPLICATION NO.	FILING DATE	FIRST NAMED INVENTOR	ATTORNEY DOCKET NO.	CONFIRMATION NO.
12/916,522	10/30/2010	Dipen T. Patel	P00288	9761

87598 7590 01/19/2012
Morgan Law Offices, PLC
4635 S. Lakeshore Dr. Suite 131
Tempe, AZ 85282

EXAMINER
COSME, NATASHA W

ART UNIT	PAPER NUMBER
2617	

MAIL DATE	DELIVERY MODE
01/19/2012	PAPER

Please find below and/or attached an Office communication concerning this application or proceeding.

The time period for reply, if any, is set in the attached communication.

UNITED STATES PATENT AND TRADEMARK OFFICE

Commissioner for Patents
United States Patent and Trademark Office
P.O. Box 1450,
Alexandria, VA 22313-1450
www.uspto.gov

MAIL

JAN 19 2012

DIRECTOR'S OFFICE
TECHNOLOGY CENTER 2600

Morgan Law Offices, PLC
4635 S. Lakeshore Dr. Suite 131
Tempe AZ 85282

In re Application of:
PATEL, DIPEN T. et al
Serial No.: 12/916,522
Filed: October 30, 2010
Attorney Docket Number: P00288
Title: **TECHNIQUE FOR BYPASSING AN IP PBX**

DECISION ON PETITION TO MAKE SPECIAL FOR NEW APPLICATION UNDER 37 C.F.R. § 1.102 & M.P.E.P. § 708.02

This is a decision on the petition filed on May 20, 2011 to make the above-identified application special for accelerated examination procedure under 37 C.F.R. § 1.102(d).

The petition to make the application special is **DENIED**.

REGULATION AND PRACTICE

To be eligible for accelerated examination under 37 C.F.R. § 1.102(d) and pursuant to the "Change to Practice for Petitions in Patent Applications to Make Special and for Accelerated Examination" published in the Federal Register on June 26, 2006 (71 Fed. Reg. 36323) and effective August 25, 2006, the following conditions must be satisfied:

1. The application must be a non-reissue utility or design application filed under 37 CFR 1.111(a);
2. The application, the petition and the required fees must be filed concurrently and electronically using the USPTO's electronic filing system (EFS), or EFS-web; if not filed electronically, a statement asserting that EFS and EFS-web were not available during the normal business hours;
3. The application, at the time of filing, must be complete under 37 CFR 1.51 and in condition for examination;
4. The application must contain three or fewer independent claims and twenty or fewer total claims and the claims must be directed to a single invention.

The application as filed is not eligible for the accelerated examination under 37 C.F.R. § 1.102(d) at least because the application and the petition were not filed concurrently. Also, the application was not complete under 37 CFR 1.51 and in condition for examination at the time of filing. The mailing of a Notice To File Corrected Application Papers on November 15, 2010 is evidence that the application was not complete and in condition for examination at the time of filing.

Applicant should note that a petition to make special filed on or after August 25, 2006 under 37 C.F.R. § 1.102(d) will only be granted if it is based upon applicant's health or age or is under the PPH pilot program, or if it complies with the requirements set forth in MPEP 708.02(a).

For the above-stated reasons, the petition is denied. The application will be taken up by the examiner for action in its regular turn.

Any inquiry regarding this decision should be directed to Michael Horabik, Quality Assurance Specialist, at (571) 272-3068.

/Michael Horabik/

Michael Horabik
Quality Assurance Specialist
Technology Center 2600
Communications

UNITED STATES PATENT AND TRADEMARK OFFICE

Commissioner for Patents
United States Patent and Trademark Office
P.O. Box 1450
Alexandria, VA 22313-1450
www.uspto.gov

MITCHELL A. SMOLOW
720 HAMPTON ROAD
SHAVERTOWN, PA 18708

MAILED

DEC 21 2010

OFFICE OF PETITIONS

In re Application of

Howard Gonchar, et al.
Application No. 12/916,575
Filed: October 31, 2010
Attorney Docket No. 146.005

DECISION ON PETITION
TO MAKE SPECIAL UNDER
37 CFR 1.102(c)(1)

This is a decision on the petition under 37 CFR 1.102(c)(1), filed November 1, 2010, to make the above-identified application special based on applicant's age as set forth in M.P.E.P. § 708.02, Section IV.

The petition is **GRANTED**.

A grantable petition to make an application special under 37 CFR 1.102(c)(1) and MPEP § 708.02, Section IV: Applicant's Age must be accompanied by evidence showing that at least one of the applicants is 65 years of age, or more, such as a birth certificate or a statement by applicant. No fee is required

The instant petition includes a statement from applicant's representative that he is in possession of proof of applicant Howard Gonchar's age. Accordingly, the above-identified application has been accorded "special" status.

Telephone inquiries concerning this decision should be directed to undersigned at 571-272-1642.

All other inquiries concerning either the examination or status of the application should be directed to the Office of Patent Application Processing at their hotline 571-272-4000.

The application is being forwarded to the Technology Center Art Unit 1771 for action on the merits commensurate with this decision.

/AMW/
April M. Wise
Petitions Examiner
Office of Petitions

UNITED STATES PATENT AND TRADEMARK OFFICE

Commissioner for Patents
United States Patent and Trademark Office
P.O. Box 1450
Alexandria, VA 22313-1450
www.uspto.gov

In re Application of
Erich Thallner

Application No. 12916734

Filed: November 1,2010

Attorney Docket No. BE9398US.1

:DECISION ON PETITION TO MAKE SPECIAL
:UNDER 37 CFR 1.102(c)(1)

This is a decision on the electronic petition under 37 CFR 1.102 (c)(1), filed 07-APR-2011 to make the above-identified application special based on applicant's age as set forth in MPEP § 708.02, Section IV.

The petition is **GRANTED**.

A grantable petition to make an application special under 37 CFR 1.102(c)(1), MPEP § 708.02, Section IV: Applicant's Age must include a statement by applicant or a registered practitioner having evidence that applicant is at least 65 years of age. No fee is required.

Accordingly, the above-identified application has been accorded "special" status and will be taken up for action by the examiner upon the completion of all pre-examination processing.

Telephone inquiries concerning this electronic decision should be directed to the Electronic Business Center at 866-217-9197.

All other inquiries concerning either the examination or status of the application should be directed to the Technology Center.

Doc code : PET.OP.AGE
Description : Petition to make special based on Age/Health

PTO/SB/130 (07-09)
Approved for use through 07/31/2012. OMB 0651- 0031
U.S. Patent and Trademark Office; U.S. DEPARTMENT OF COMMERCE
Under the Paperwork Reduction Act of 1995, no persons are required to respond to a collection of information unless it contains a valid OMB control number

PETITION TO MAKE SPECIAL BASED ON AGE FOR ADVANCEMENT OF EXAMINATION UNDER 37 CFR 1.102(c)(1)

Application Information

Application Number	12/916,734	Confirmation Number	1158	Filing Date	2010-11-01
Attorney Docket Number (optional)	BE9398US.1	Art Unit	2818	Examiner	Brandon C Fox
First Named Inventor	Erich Thallner				
Title of Invention	COMBINATION OF A SUBSTRATE AND A WAFER				

Attention: Office of Petitions
An application may be made special for advancement of examination upon filing of a petition showing that the applicant is 65 years of age, or more. No fee is required with such a petition. See 37 CFR 1.102(c)(1) and MPEP 708.02 (IV).

APPLICANT HEREBY PETITIONS TO MAKE SPECIAL FOR ADVANCEMENT OF EXAMINATION IN THIS APPLICATION UNDER 37 CFR 1.102(c)(1) and MPEP 708.02 (IV) ON THE BASIS OF THE APPLICANT'S AGE.

A grantable petition requires one of the following items:
(1) Statement by one named inventor in the application that he/she is 65 years of age, or more; or
(2) Certification by a registered attorney/agent having evidence such as a birth certificate, passport, driver's license, etc. showing one named inventor in the application is 65 years of age, or more.

Name of Inventor who is 65 years of age, or older

Given Name	Middle Name	Family Name	Suffix
Erich		Thallner	

A signature of the applicant or representative is required in accordance with 37 CFR 1.33 and 10.18.
Please see 37 CFR 1.4(d) for the format of the signature.

Select (1) or (2) :

○ (1) I am an inventor in this application and I am 65 years of age, or more.

◉ (2) I am an attorney or agent registered to practice before the Patent and Trademark Office, and I certify that I am in possession of evidence, and will retain such in the application file record, showing that the inventor listed above is 65 years of age, or more.

Signature	/Mark Kusner/	Date (YYYY-MM-DD)	2011-04-07
Name	Mark Kusner	Registration Number	31115

PTO/SB/130 (07-09)
Approved for use through 07/31/2012. OMB 0651- 0031
U.S. Patent and Trademark Office; U.S. DEPARTMENT OF COMMERCE
Under the Paperwork Reduction Act of 1995, no persons are required to respond to a collection of information unless it contains a valid OMB control number

Privacy Act Statement

The Privacy Act of 1974 (P.L. 93-579) requires that you be given certain information in connection with your submission of the attached form related to a patent application or patent. Accordingly, pursuant to the requirements of the Act, please be advised that: (1) the general authority for the collection of this information is 35 U.S.C. 2(b)(2); (2) furnishing of the information solicited is voluntary; and (3) the principal purpose for which the information is used by the U.S. Patent and Trademark Office is to process and/or examine your submission related to a patent application or patent. If you do not furnish the requested information, the U.S. Patent and Trademark Office may not be able to process and/or examine your submission, which may result in termination of proceedings or abandonment of the application or expiration of the patent.

The information provided by you in this form will be subject to the following routine uses:

1. The information on this form will be treated confidentially to the extent allowed under the Freedom of Information Act (5 U.S.C. 552) and the Privacy Act (5 U.S.C. 552a). Records from this system of records may be disclosed to the Department of Justice to determine whether the Fr eedom of Information Act requires disclosure of these records.

2. A record from this system of records may be disclosed, as a routine use, in the course of presenting evidence to a court, magistrate, or administrative tribunal, including disclosures to opposing counsel in the course of settlement negotiations.

3. A record in this system of records may be disclosed, as a routine use, to a Member of Congress submitting a request involving an individual, to whom the record pertains, when the individual has requested assistance from the Member with respect to the subject matter of the record.

4. A record in this system of records may be disclosed, as a routine use, to a contractor of the Agency having need for the information in order to perform a contract. Recipients of information shall be required to comply with the requirements of the Privacy Act of 1974, as amended, pursuant to 5 U.S.C. 552a(m).

5. A record related to an International Application filed under the Patent Cooperation Treaty in this system of records may be disclosed, as a routine use, to the International Bureau of the World Intellectual Property Organization, pursuant to the Patent Cooperation Treaty.

6. A record in this system of records may be disclosed, as a routine use, to another federal agency for purposes of National Security review (35 U.S.C. 181) and for review pursuant to the Atomic Energy Act (42 U.S.C. 218(c)).

7. A record from this system of records may be disclosed, as a routine use, to the Administrator, General Services, or his/her designee, during an inspection of records conducted by GSA as part of that agency's responsibility to recommend improvements in records management practices and programs, under authority of 44 U.S.C. 2904 and 2906. Such disclosure shall be made in accordance with the GSA regulations governing inspection of records for this purpose, and any other relevant (i.e., GSA or Commerce) directive. Such disclosure shall not be used to make determinations about indivi duals.

8. A record from this system of records may be disclosed, as a routine use, to the public after either publication of the application pursuant to 35 U.S.C. 122(b) or issuance of a patent pursuant to 35 U.S.C. 151. Further, a record may be disclosed, subject to the limitations of 37 CFR 1.14, as a routine use, to the public if the record was filed in an application which became abandoned or in which the proceedings were terminated and which application is referenced by either a published application, an application open to public inspections or an issued patent.

9. A record from this system of records may be disclosed, as a routine use, to a Federal, State, or local law enforcement agency, if the USPTO becomes aware of a violation or potential violation of law or regulation.

UNITED STATES PATENT AND TRADEMARK OFFICE

Commissioner for Patents
United States Patent and Trademark Office
P.O. Box 1450
Alexandria, VA 22313-1450
www.uspto.gov

In re Application of
Erich Thallner

Application No. 12916751

Filed: November 1,2010

Attorney Docket No. BE9398US.2

:DECISION ON PETITION TO MAKE SPECIAL
:UNDER 37 CFR 1.102(c)(1)

This is a decision on the electronic petition under 37 CFR 1.102 (c)(1), filed 07-APR-2011 to make the above-identified application special based on applicant's age as set forth in MPEP § 708.02, Section IV.

The petition is **GRANTED**.

A grantable petition to make an application special under 37 CFR 1.102(c)(1), MPEP § 708.02, Section IV: Applicant's Age must include a statement by applicant or a registered practitioner having evidence that applicant is at least 65 years of age. No fee is required.

Accordingly, the above-identified application has been accorded "special" status and will be taken up for action by the examiner upon the completion of all pre-examination processing.

Telephone inquiries concerning this electronic decision should be directed to the Electronic Business Center at 866-217-9197.

All other inquiries concerning either the examination or status of the application should be directed to the Technology Center.

Doc code : PET.OP.AGE
Description : Petition to make special based on Age/Health

PTO/SB/130 (07-09)
Approved for use through 07/31/2012. OMB 0651- 0031
U.S. Patent and Trademark Office; U.S. DEPARTMENT OF COMMERCE
Under the Paperwork Reduction Act of 1995, no persons are required to respond to a collection of information unless it contains a valid OMB control number

PETITION TO MAKE SPECIAL BASED ON AGE FOR ADVANCEMENT OF EXAMINATION UNDER 37 CFR 1.102(c)(1)

Application Information

Application Number	12/916,751	Confirmation Number	1191	Filing Date	2010-11-01
Attorney Docket Number (optional)	BE9398US.2	Art Unit	2818	Examiner	Brandon C Fox
First Named Inventor	Erich Thallner				
Title of Invention	COMBINATION OF A SUBSTRATE AND A WAFER				

Attention: Office of Petitions
An application may be made special for advancement of examination upon filing of a petition showing that the applicant is 65 years of age, or more. No fee is required with such a petition. See 37 CFR 1.102(c)(1) and MPEP 708.02 (IV).

APPLICANT HEREBY PETITIONS TO MAKE SPECIAL FOR ADVANCEMENT OF EXAMINATION IN THIS APPLICATION UNDER 37 CFR 1.102(c)(1) and MPEP 708.02 (IV) ON THE BASIS OF THE APPLICANT'S AGE.

A grantable petition requires one of the following items:
(1) Statement by one named inventor in the application that he/she is 65 years of age, or more; or
(2) Certification by a registered attorney/agent having evidence such as a birth certificate, passport, driver's license, etc. showing one named inventor in the application is 65 years of age, or more.

Name of Inventor who is 65 years of age, or older

Given Name	Middle Name	Family Name	Suffix
Erich		Thallner	

A signature of the applicant or representative is required in accordance with 37 CFR 1.33 and 10.18.
Please see 37 CFR 1.4(d) for the format of the signature.

Select (1) or (2) :

○ (1) I am an inventor in this application and I am 65 years of age, or more.

◉ (2) I am an attorney or agent registered to practice before the Patent and Trademark Office, and I certify that I am in possession of evidence, and will retain such in the application file record, showing that the inventor listed above is 65 years of age, or more.

Signature	/Mark Kusner/	Date (YYYY-MM-DD)	2011-04-07
Name	Mark Kusner	Registration Number	31115

PTO/SB/130 (07-09)
Approved for use through 07/31/2012. OMB 0651- 0031
U.S. Patent and Trademark Office; U.S. DEPARTMENT OF COMMERCE
Under the Paperwork Reduction Act of 1995, no persons are required to respond to a collection of information unless it contains a valid OMB control number

Privacy Act Statement

The Privacy Act of 1974 (P.L. 93-579) requires that you be given certain information in connection with your submission of the attached form related to a patent application or patent. Accordingly, pursuant to the requirements of the Act, please be advised that: (1) the general authority for the collection of this information is 35 U.S.C. 2(b)(2); (2) furnishing of the information solicited is voluntary; and (3) the principal purpose for which the information is used by the U.S. Patent and Trademark Office is to process and/or examine your submission related to a patent application or patent. If you do not furnish the requested information, the U.S. Patent and Trademark Office may not be able to process and/or examine your submission, which may result in termination of proceedings or abandonment of the application or expiration of the patent.

The information provided by you in this form will be subject to the following routine uses:

1. The information on this form will be treated confidentially to the extent allowed under the Freedom of Information Act (5 U.S.C. 552) and the Privacy Act (5 U.S.C. 552a). Records from this system of records may be disclosed to the Department of Justice to determine whether the Fr eedom of Information Act requires disclosure of these records.

2. A record from this system of records may be disclosed, as a routine use, in the course of presenting evidence to a court, magistrate, or administrative tribunal, including disclosures to opposing counsel in the course of settlement negotiations.

3. A record in this system of records may be disclosed, as a routine use, to a Member of Congress submitting a request involving an individual, to whom the record pertains, when the individual has requested assistance from the Member with respect to the subject matter of the record.

4. A record in this system of records may be disclosed, as a routine use, to a contractor of the Agency having need for the information in order to perform a contract. Recipients of information shall be required to comply with the requirements of the Privacy Act of 1974, as amended, pursuant to 5 U.S.C. 552a(m).

5. A record related to an International Application filed under the Patent Cooperation Treaty in this system of records may be disclosed, as a routine use, to the International Bureau of the World Intellectual Property Organization, pursuant to the Patent Cooperation Treaty.

6. A record in this system of records may be disclosed, as a routine use, to another federal agency for purposes of National Security review (35 U.S.C. 181) and for review pursuant to the Atomic Energy Act (42 U.S.C. 218(c)).

7. A record from this system of records may be disclosed, as a routine use, to the Administrator, General Services, or his/her designee, during an inspection of records conducted by GSA as part of that agency's responsibility to recommend improvements in records management practices and programs, under authority of 44 U.S.C. 2904 and 2906. Such disclosure shall be made in accordance with the GSA regulations governing inspection of records for this purpose, and any other relevant (i.e., GSA or Commerce) directive. Such disclosure shall not be used to make determinations about indivi duals.

8. A record from this system of records may be disclosed, as a routine use, to the public after either publication of the application pursuant to 35 U.S.C. 122(b) or issuance of a patent pursuant to 35 U.S.C. 151. Further, a record may be disclosed, subject to the limitations of 37 CFR 1.14, as a routine use, to the public if the record was filed in an application which became abandoned or in which the proceedings were terminated and which application is referenced by either a published application, an application open to public inspections or an issued patent.

9. A record from this system of records may be disclosed, as a routine use, to a Federal, State, or local law enforcement agency, if the USPTO becomes aware of a violation or potential violation of law or regulation.

Doc Code: PET.AUTO Document Description: Petition automatically granted by EFS-Web	PTO/SB/140 U.S. Patent and Trademark Office Department of Commerce

Electronic Petition Request	**PETITION TO WITHDRAW AN APPLICATION FROM ISSUE AFTER PAYMENT OF THE ISSUE FEE UNDER 37 CFR 1.313(c)**
Application Number	12916856
Filing Date	01-Nov-2010
First Named Inventor	Hitoshi SHIGA
Art Unit	2824
Examiner Name	DOUGLAS KING
Attorney Docket Number	370378US2CONT
Title	NONVOLATILE SEMICONDUCTOR MEMORY AND DATA READING METHOD

An application may be withdrawn from issue for further action upon petition by the applicant. To request that the Office withdraw an application from issue, applicant must file a petition under this section including the fee set forth in § 1.17(h) and a showing of good and sufficient reasons why withdrawal of the application from issue is necessary.

APPLICANT HEREBY PETITIONS TO WITHDRAW THIS APPLICATION FROM ISSUE UNDER 37 CFR 1.313(c).

A grantable petition requires the following items:
(1) Petition fee; and
(2) One of the following reasons:
(a) Unpatentability of one or more claims, which must be accompanied by an unequivocal statement that one or more claims are unpatentable, an amendment to such claim or claims, and an explanation as to how the amendment causes such claim or claims to be patentable;
(b) Consideration of a request for continued examination in compliance with § 1.114 (for a utility or plant application only); or
(c) Express abandonment of the application. Such express abandonment may be in favor of a continuing application, but not a CPA under 37 CFR 1.53(d).

Petition Fee

☐ Applicant claims SMALL ENTITY status. See 37 CFR 1.27.

☐ Applicant is no longer claiming SMALL ENTITY status. See 37 CFR 1.27(g)(2).

☐ Applicant(s) status remains as SMALL ENTITY.

☒ Applicant(s) status remains as other than SMALL ENTITY

Reason for withdrawal from issue

○ One or more claims are unpatentable

◉ Consideration of a request for continued examination (RCE) (List of Required Documents and Fees)

○ Applicant hereby expressly abandons the instant application (any attorney/agent signing for this reason must have power of attorney pursuant to 37 CFR 1.32(b)).

RCE request,submission, and fee.

☐ I certify, in accordance with 37 CFR 1.4(d)(4) that : The RCE request ,submission, and fee have already been filed in the above-identified application on

☒ Are attached.

THIS PORTION MUST BE COMPLETED BY THE SIGNATORY OR SIGNATORIES

I certify, in accordance with 37 CFR 1.4(d)(4) that I am:

◉ An attorney or agent registered to practice before the Patent and Trademark Office who has been given power of attorney in this application.

○ An attorney or agent registered to practice before the Patent and Trademark Office, acting in a representative capacity.

○ A sole inventor

○ A joint inventor; I certify that I am authorized to sign this submission on behalf of all of the inventors

○ A joint inventor; all of whom are signing this e-petition

○ The assignee of record of the entire interest that has properly made itself of record pursuant to 37 CFR 3.71

Signature	/Sameer Gokhale/
Name	Sameer Gokhale
Registration Number	62618

UNITED STATES PATENT AND TRADEMARK OFFICE

Commissioner for Patents
United States Patent and Trademark Office
P.O. Box 1450
Alexandria, VA 22313-1450
www.uspto.gov

Decision Date : November 4,2011

In re Application of :

Hitoshi SHIGA

DECISION ON PETITION

UNDER CFR 1.313(c)(2)

Application No : 12916856

Filed : 01-Nov-2010

Attorney Docket No : 370378US2CONT

This is an electronic decision on the petition under 37 CFR 1.313(c)(2), filed November 4,2011 , to withdraw the above-identified application from issue after payment of the issue fee.

The petition is **GRANTED.**

The above-identified application is withdrawn from issue for consideration of a submission under 37 CFR 1.114 (request for continued examination). See 37 CFR 1.313(c)(2).

Petitioner is advised that the issue fee paid in this application cannot be refunded. If, however, this application is again allowed, petitioner may request that it be applied towards the issue fee required by the new Notice of Allowance.

Telephone inquiries concerning this decision should be directed to the Patent Electronic Business Center (EBC) at 866-217-9197.

This application file is being referred to Technology Center AU 2824 for processing of the request for continuing examination under 37 CFR 1.114 .

Office of Petitions