**Doc Code: PET.GREEN**
**Document Description: Petition for Green Tech Pilot**

PTO/SB/420 (11-10)
Approved for use through 01/31/2011. OMB 0651-0062
U.S. Patent and Trademark Office; U. S. DEPARTMENT OF COMMERCE
Under the Paperwork Reduction Act of 1995, no persons are required to respond to a collection of information unless it displays a valid OMB control number.

# PETITION TO MAKE SPECIAL UNDER THE GREEN TECHNOLOGY PILOT PROGRAM

| | | |
|---|---|---|
| Attorney Docket Number: GCOM-001/02US | Application Number (if known): 12/977,679 | Filing date: December 23, 2010 |
| First Named Inventor: Eric INGERSOLL | | |
| Title: METHODS AND DEVICES FOR OPTIMIZING HEAT TRANSFER WITHIN A COMPRESSION AND/OR EXPANSION DEVICE | | |

**APPLICANT HEREBY REQUESTS TO PARTICIPATE IN THE GREEN TECHNOLOGY PILOT PROGRAM FOR THE ABOVE-IDENTIFIED APPLICATION. See Instruction Sheet on page 2.**

This petition must be timely filed electronically using the USPTO electronic filing system, EFS-Web.

1. By filing this petition:

   **Applicant is requesting early publication: Applicant hereby requests early publication under 37 CFR 1.219 and the publication fee set forth in 37 CFR 1.18(d) accompanies this request.**

2. By filing this petition: applicant is agreeing to make an election without traverse in a telephonic interview and elect an invention that meets the eligibility requirements for the Green Technology Pilot Program, if the Office determines that the claims are not obviously directed to a single invention. See Instruction Sheet.

3. This request is accompanied by statements of special status for the eligibility requirement.

4. The application contains no more than three (3) independent claims and twenty (20) total claims.

5. The application does not contain any multiple dependent claims.

6. Other attachments: Preliminary Amendment

| | |
|---|---|
| Signature Scott B. Weston | Date 7/11/2011 |
| Name (Print/Typed) Scott B. Weston | Registration Number 55,854 |

***Note:*** *Signatures of all the inventors or assignees of record of the entire interest or their representative(s) are required in accordance with 37 CFR 1.33 and 11.18. Please see 37 CFR 1.4(d) for the form of the signature. If necessary, submit multiple forms for more than one signature see below*.*

[X] *Total of 1 forms are submitted.

The information is required to obtain or retain a benefit by the public which is to file (and by the USPTO to process) an application. Confidentiality is governed by 35 U.S.C. 122 and 37 CFR 1.11 and 1.14. This collection is estimated to take 12 hours to complete, including gathering, preparing, and submitting the completed application form to the USPTO. Time will vary depending upon the individual case. Any comments on the amount of time you require to complete this form and/or suggestions for reducing this burden, should be sent to the Chief Information Officer, U.S. Patent and Trademark Office, U.S. Department of Commerce, P.O. Box 1450, Alexandria, VA 22313-1450. DO NOT SEND FEES OR COMPLETED FORMS TO THIS ADDRESS. **SEND TO: Commissioner for Patents, P.O. Box 1450, Alexandria, VA 22313-1450.**

*If you need assistance in completing the form, call 1-800-PTO-9199 and select option 2.*

**Attorney Docket No. GCOM-001/02US 312615-2033** **PATENT**

# IN THE UNITED STATES PATENT AND TRADEMARK OFFICE

| | | | |
|---|---|---|---|
| In Re Application of: | Eric INGERSOLL, et al. | Confirmation No.: | 9795 |
| Serial No.: | 12/977,679 | Group Art Unit: | 3744 |
| Filed: | December 23, 2010 | Examiner: | Unassigned |

FOR: **METHODS AND DEVICES FOR OPTIMIZING HEAT TRANSFER WITHIN A COMPRESSION AND/OR EXPANSION DEVICE**

---

**Mail Stop Petition**
Commissioner for Patents
P.O. Box 1450
Alexandria, VA 22313-1450

## STATEMENT OF SPECIAL STATUS

Submitted herewith is a Petition to Make Special Under the Green Technology Pilot Program for the above-identified patent application. Applicants submit that the claimed invention will materially contribute to the development of renewable energy sources and/or the more efficient utilization and conservation of energy resources. The invention relates generally to systems, devices and methods for the compression and/or expansion of a gas, such as air, and particularly to a system, device and method for optimizing heat transfer during the compression and/or expansion of a gas. Such systems and methods can be used in, for example, compressed air energy storage (CAES) systems, to provide an efficient solution to a persistent problem with intermittent energy-generation systems (e.g., wind and solar renewable energy) by providing systems and methods for storing and recovering energy from those sources, thereby making them deployable on a widespread and practical basis.

The claimed invention also improves the efficiency of said energy storage and recovery systems by controlling heat transfer between the gas being compressed and/or expanded and the system to increase the energy recovered from the system. In addition, the invention assists in reducing green house gas emissions due to increased overall fuel consumption that is attendant to the inability of traditional power plants to adjust to fluctuating power demand. Furthermore, the

claimed invention helps eliminate the need for rapidly-deployable gas turbines or generators that require the use of non-renewable energy resources (e.g., natural gas and diesel fuel) and are environmentally damaging due to their inherent noise and emissions.

Accordingly, Applicant requests that this Petition to Make Special be granted and the application undergo accelerated examination.

Under 37 CFR § 1.102(c), no fee is required. The Director is hereby authorized to charge any deficiency in the fees filed, asserted to be filed, or which should have been filed herewith to our Deposit Account No. 50-1283.

Dated: July 11, 2011

Respectfully submitted,
**COOLEY LLP**

By: Scott B. Weston

Scott B. Weston
Reg. No. 55,854

COOLEY LLP
ATTN: Patent Group
777 6th Street NW, Suite 1100
Washington, DC 20001

Tel: (617) 937-2327
Fax: (202) 842-7899

468384 v1/RE

UNITED STATES PATENT AND TRADEMARK OFFICE

UNITED STATES DEPARTMENT OF COMMERCE
United States Patent and Trademark Office
Address: COMMISSIONER FOR PATENTS
P.O. Box 1450
Alexandria, Virginia 22313-1450
www.uspto.gov

| APPLICATION NO. | FILING DATE | FIRST NAMED INVENTOR | ATTORNEY DOCKET NO. | CONFIRMATION NO. |
|---|---|---|---|---|
| 12/977,679 | 12/23/2010 | Eric D. Ingersoll | GCOM-001/02US<br>312615-2033 | 9795 |

58249 7590 07/29/2011
COOLEY LLP
ATTN: Patent Group
Suite 1100
777 - 6th Street, NW
WASHINGTON, DC 20001

| EXAMINER |
|---|

| ART UNIT | PAPER NUMBER |
|---|---|
| 3744 | |

| MAIL DATE | DELIVERY MODE |
|---|---|
| 07/29/2011 | PAPER |

**Please find below and/or attached an Office communication concerning this application or proceeding.**

The time period for reply, if any, is set in the attached communication.

UNITED STATES PATENT AND TRADEMARK OFFICE

Commissioner for Patents
United States Patent and Trademark Office
P.O. Box 1450
Alexandria, VA 22313-1450
www.uspto.gov

COOLEY LLP
ATTN: Patent Group
Suite 1100
777 - 6th Street, NW
WASHINGTON DC 20001

| | | |
|---|---|---|
| In re Application of<br>INGERSOLL, ERIC D.<br>Application No. 12/977679<br>Filed: December 23, 2010<br>Attorney Docket No. GCOM-001/02US 312615-2033 | :<br>:<br>:<br>:<br>: | DECISION ON PETITION<br>TO MAKE SPECIAL UNDER<br>THE GREEN TECHNOLOGY<br>PILOT PROGRAM |

This is a decision on the petition under 37 CFR 1.102, filed July 11, 2011, to make the above-identified application special under the pilot program for applications pertaining to Green Technologies as set forth in 74 Federal Register Notice 64666 (December 8, 2009) and amended by 75 Federal Register Notice 28554 (May 21, 2010) and 75 Federal Register Notice 69049 (November 10, 2010).

The petition is **granted**.

A grantable petition to make an application special under 37 CFR 1.102 and the pilot program as set forth in 74 FR 64666 must be directed to a nonprovisional application filed under 35 USC 111(a) or be a national stage entry under 35 USC 371, exclusive of any reissue applications.

If reconsideration of this decision is desired, a petition for reconsideration must be filed within ONE (1) MONTH OR THIRTY (30) DAYS from the mail date of this decision, whichever is longer. No extension of this time limit can be granted under 37 CFR 1.136(a) or (b). The petition for reconsideration should include an exhaustive attempt to provide the lacking item(s) noted below, since, after a decision on the petition for reconsideration, no further reconsideration or review of the matter will be undertaken by the Director.

In order to qualify for special status, the following requirements must be met. 1) The application must have no more than 3 independent claims and no more than 20 total claims. 2) The application must not contain any multiple dependent claims. 3) The petition must state the basis for seeking special status, i.e., the claimed invention either: A) materially enhances the quality of the environment or B) materially contributes to: i) the discovery or development of renewable energy resources, ii) the more efficient utilization and conservation of energy resources, or iii)

greenhouse gas emission reduction. 4) If the disclosure is not clear on its face that the claimed invention materially contributes under category (A) or (B), the petition must be accompanied by a statement by the applicant, assignee, or an attorney/agent registered to practice before the Office explaining how the materiality standard is met. 5) A statement that applicant will agree to make an election without traverse in a telephonic interview if a restriction requirement is made by the examiner. 6) The petition to make special must be filed electronically. 7) The petition must be filed at least one day prior to the date that a first Office Action appears in the Patent Application Information Retrieval (PAIR) system. 8) The petition must be accompanied by a request for early publication in compliance with 37 CFR 1.219 and include the publication fee as set forth in 37 CFR 1.18(d).

The requirement for a fee for consideration of the petition to make special for applications pertaining to Green Technologies has been waived.

The instant petition complies with items 1 – 8 above. Accordingly, the above-identified application has been accorded "special" status.

Telephone inquires concerning this decision should be directed to Henry C. Yuen at 571-272-4856.

This application will be forwarded to the Technology Center Art Unit 3744 for action on the merits commensurate with this decision.

/Henry C. Yuen/

Henry C. Yuen
Quality Assurance Specialist
Technology Center TC 3700

UNITED STATES PATENT AND TRADEMARK OFFICE

Commissioner for Patents
United States Patent and Trademark Office
P.O. Box 1450
Alexandria, VA 22313-1450
www.uspto.gov

**MAILED**

JAN 30 2012

**OFFICE OF PETITIONS**

HUTCHENS LAW OFFICE
P.O. BOX 597
PHOENIX AZ 85001

| | | |
|---|---|---|
| In re Application of | : | |
| Marinus Todd Westrate | : | |
| Application No. 12/977,719 | : | DECISION ON PETITION |
| Filed: December 23, 2010 | : | TO WITHDRAW |
| Attorney Docket No. West.0002 | : | FROM RECORD |
| | : | |

This is a decision on the Request to Withdraw as attorney or agent of record under 37 C.F.R. § 1.36(b), filed December 27, 2011.

The request is **APPROVED**.

The request was signed by Beth Hutchens on behalf of the practitioners of record associated with Customer Number 91816.

Applicant is reminded that there is no attorney of record at this time.

All future correspondence will be directed to inventor Marinus Todd Westrate at the address indicated below.

Telephone inquiries concerning this decision should be directed to Irvin Dingle at (571) 272-3210.

Irvin Dingle
Petitions Examiner
Office of Petitions

cc: Todd Westrate
5080 Warbler Way
Kalamazoo, MI 49009

UNITED STATES PATENT AND TRADEMARK OFFICE

UNITED STATES DEPARTMENT OF COMMERCE
United States Patent and Trademark Office
Address: COMMISSIONER FOR PATENTS
P.O. Box 1450
Alexandria, Virginia 22313-1450
www.uspto.gov

| APPLICATION NUMBER | FILING OR 371(C) DATE | FIRST NAMED APPLICANT | ATTY. DOCKET NO./TITLE |
|---|---|---|---|
| 12/977,719 | 12/23/2010 | Marinus Todd Westrate | West.0002 |

**CONFIRMATION NO. 9871**

**POWER OF ATTORNEY NOTICE**

91816
Hutchens Law Office
P.O. Box 597
Phoenix, AZ 85001

*OC000000052264802*

Date Mailed: 01/30/2012

## NOTICE REGARDING CHANGE OF POWER OF ATTORNEY

This is in response to the Power of Attorney filed 12/27/2011.

- The withdrawal as attorney in this application has been accepted. Future correspondence will be mailed to the new address of record. 37 CFR 1.33.

/idingle/

Office of Data Management, Application Assistance Unit (571) 272-4000, or (571) 272-4200, or 1-888-786-0101

UNITED STATES PATENT AND TRADEMARK OFFICE

UNITED STATES DEPARTMENT OF COMMERCE
United States Patent and Trademark Office
Address: COMMISSIONER FOR PATENTS
P.O. Box 1450
Alexandria, Virginia 22313-1450
www.uspto.gov

| APPLICATION NUMBER | FILING OR 371(C) DATE | FIRST NAMED APPLICANT | ATTY. DOCKET NO./TITLE |
|---|---|---|---|
| 12/977,719 | 12/23/2010 | Marinus Todd Westrate | West.0002 |

**CONFIRMATION NO. 9871**

**POA ACCEPTANCE LETTER**

Todd Westrate
5080 Warbler Way
Kalamazoo, MI 49009

*OC000000052264905*

Date Mailed: 01/30/2012

## NOTICE OF ACCEPTANCE OF POWER OF ATTORNEY

This is in response to the Power of Attorney filed 12/27/2011.

The Power of Attorney in this application is accepted. Correspondence in this application will be mailed to the above address as provided by 37 CFR 1.33.

/idingle/

Office of Data Management, Application Assistance Unit (571) 272-4000, or (571) 272-4200, or 1-888-786-0101

**Doc Code: PET.GREEN**
**Document Description: Petition for Green Tech Pilot**

PTO/SB/420 (11-10)
Approved for use through 01/31/2011. OMB 0651-0062
U.S. Patent and Trademark Office; U. S. DEPARTMENT OF COMMERCE
Under the Paperwork Reduction Act of 1995, no persons are required to respond to a collection of information unless it displays a valid OMB control number.

# PETITION TO MAKE SPECIAL UNDER THE GREEN TECHNOLOGY PILOT PROGRAM

| | | |
|---|---|---|
| Attorney Docket Number: GCOM-001/01US | Application Number (if known): 12/977,724 | Filing date: December 23, 2010 |
| First Named Inventor: Eric INGERSOLL | | |
| Title: SYSTEM AND METHODS FOR OPTIMIZING EFFICIENCY OF A HYDRAULICALLY ACTUATED SYSTEM | | |

**APPLICANT HEREBY REQUESTS TO PARTICIPATE IN THE GREEN TECHNOLOGY PILOT PROGRAM FOR THE ABOVE-IDENTIFIED APPLICATION. See Instruction Sheet on page 2.**

This petition must be timely filed electronically using the USPTO electronic filing system, EFS-Web.

1. By filing this petition:

   **Applicant is requesting early publication: Applicant hereby requests early publication under 37 CFR 1.219 and the publication fee set forth in 37 CFR 1.18(d) accompanies this request.**

2. By filing this petition: applicant is agreeing to make an election without traverse in a telephonic interview and elect an invention that meets the eligibility requirements for the Green Technology Pilot Program, if the Office determines that the claims are not obviously directed to a single invention. See Instruction Sheet.

3. This request is accompanied by statements of special status for the eligibility requirement.

4. The application contains no more than three (3) independent claims and twenty (20) total claims.

5. The application does not contain any multiple dependent claims.

6. Other attachments: Preliminary Amendment

| | |
|---|---|
| Signature Scott B. Weston | Date 7/11/2011 |
| Name (Print/Typed) Scott B. Weston | Registration Number 55,854 |

***Note:*** *Signatures of all the inventors or assignees of record of the entire interest or their representative(s) are required in accordance with 37 CFR 1.33 and 11.18. Please see 37 CFR 1.4(d) for the form of the signature. If necessary, submit multiple forms for more than one signature see below*.*

[X] *Total of 1 forms are submitted.

The information is required to obtain or retain a benefit by the public which is to file (and by the USPTO to process) an application. Confidentiality is governed by 35 U.S.C. 122 and 37 CFR 1.11 and 1.14. This collection is estimated to take 12 hours to complete, including gathering, preparing, and submitting the completed application form to the USPTO. Time will vary depending upon the individual case. Any comments on the amount of time you require to complete this form and/or suggestions for reducing this burden, should be sent to the Chief Information Officer, U.S. Patent and Trademark Office, U.S. Department of Commerce, P.O. Box 1450, Alexandria, VA 22313-1450. DO NOT SEND FEES OR COMPLETED FORMS TO THIS ADDRESS. **SEND TO: Commissioner for Patents, P.O. Box 1450, Alexandria, VA 22313-1450.**

*If you need assistance in completing the form, call 1-800-PTO-9199 and select option 2.*

**Attorney Docket No. GCOM-001/01US 312615-2036** **PATENT**

# IN THE UNITED STATES PATENT AND TRADEMARK OFFICE

| | | | |
|---|---|---|---|
| In Re Application of: | Eric INGERSOLL, et al. | Confirmation No.: | 9881 |
| Serial No.: | 12/977,724 | Group Art Unit: | 3745 |
| Filed: | December 23, 2010 | Examiner: | Unassigned |

FOR: **SYSTEM AND METHODS FOR OPTIMIZING EFFICIENCY OF A HYDRAULICALLY ACTUATED SYSTEM**

---

**Mail Stop Petition**
Commissioner for Patents
P.O. Box 1450
Alexandria, VA 22313-1450

## STATEMENT OF SPECIAL STATUS

Submitted herewith is a Petition to Make Special Under the Green Technology Pilot Program for the above-identified patent application. Applicants submit that the claimed invention will materially contribute to the development of renewable energy sources and/or the more efficient utilization and conservation of energy resources. The invention relates generally to systems and methods of optimizing the energy efficiency of hydraulic actuation systems, for use in, for example, storing energy using a system and methods for optimizing the efficiency of a compressed air energy storage (CAES) system. Such systems and methods provide an efficient solution to a persistent problem with intermittent energy-generation systems (e.g., wind and solar renewable energy) by providing systems and methods for storing and recovering energy from those sources, thereby making them deployable on a widespread and practical basis.

The claimed invention also improves the efficiency of said energy storage and recovery systems by controlling and operating hydraulic pumps/motors used within the hydraulic actuation system within a maximum efficiency range of the pumps throughout an entire cycle of the system. In addition, the invention assists in reducing green house gas emissions due to increased overall fuel consumption that is attendant to the inability of traditional power plants to adjust to fluctuating power demand. Furthermore, the claimed invention helps eliminate the need

for rapidly-deployable gas turbines or generators that require the use of non-renewable energy resources (e.g., natural gas and diesel fuel) and are environmentally damaging due to their inherent noise and emissions.

Accordingly, Applicant requests that this Petition to Make Special be granted and the application undergo accelerated examination.

Under 37 CFR § 1.102(c), no fee is required. The Director is hereby authorized to charge any deficiency in the fees filed, asserted to be filed, or which should have been filed herewith to our Deposit Account No. 50-1283.

Dated: July 11, 2011

Respectfully submitted,
**COOLEY LLP**

By: Scott B. Weston
Scott B. Weston
Reg. No. 55,854

COOLEY LLP
ATTN: Patent Group
777 6th Street NW, Suite 1100
Washington, DC 20001

Tel: (617) 937-2327
Fax: (202) 842-7899

71292 v1/BN

UNITED STATES PATENT AND TRADEMARK OFFICE

UNITED STATES DEPARTMENT OF COMMERCE
United States Patent and Trademark Office
Address: COMMISSIONER FOR PATENTS
P.O. Box 1450
Alexandria, Virginia 22313-1450
www.uspto.gov

| APPLICATION NO. | FILING DATE | FIRST NAMED INVENTOR | ATTORNEY DOCKET NO. | CONFIRMATION NO. |
|---|---|---|---|---|
| 12/977,724 | 12/23/2010 | Eric D. Ingersoll | GCOM-001/01US<br>312615-2036 | 9881 |

58249 7590 07/29/2011
COOLEY LLP
ATTN: Patent Group
Suite 1100
777 - 6th Street, NW
WASHINGTON, DC 20001

| EXAMINER |
|---|

| ART UNIT | PAPER NUMBER |
|---|---|
| 3745 | |

| MAIL DATE | DELIVERY MODE |
|---|---|
| 07/29/2011 | PAPER |

**Please find below and/or attached an Office communication concerning this application or proceeding.**

The time period for reply, if any, is set in the attached communication.

UNITED STATES PATENT AND TRADEMARK OFFICE

Commissioner for Patents
United States Patent and Trademark Office
P.O. Box 1450
Alexandria, VA 22313-1450
www.uspto.gov

COOLEY LLP
ATTN: Patent Group
Suite 1100
777 - 6th Street, NW
WASHINGTON DC 20001

| | | |
|---|---|---|
| In re Application of<br>INGERSOLL, ERIC D.<br>Application No. 12/977724<br>Filed: December 23, 2010<br>Attorney Docket No. GCOM-001/01US 312615-2036 | :<br>:<br>:<br>: | DECISION ON PETITION TO MAKE SPECIAL UNDER THE GREEN TECHNOLOGY PILOT PROGRAM |

This is a decision on the petition under 37 CFR 1.102, filed July 11, 2011, to make the above-identified application special under the pilot program for applications pertaining to Green Technologies as set forth in 74 Federal Register Notice 64666 (December 8, 2009) and amended by 75 Federal Register Notice 28554 (May 21, 2010) and 75 Federal Register Notice 69049 (November 10, 2010).

The petition is **granted**.

A grantable petition to make an application special under 37 CFR 1.102 and the pilot program as set forth in 74 FR 64666 must be directed to a nonprovisional application filed under 35 USC 111(a) or be a national stage entry under 35 USC 371, exclusive of any reissue applications.

If reconsideration of this decision is desired, a petition for reconsideration must be filed within ONE (1) MONTH OR THIRTY (30) DAYS from the mail date of this decision, whichever is longer. No extension of this time limit can be granted under 37 CFR 1.136(a) or (b). The petition for reconsideration should include an exhaustive attempt to provide the lacking item(s) noted below, since, after a decision on the petition for reconsideration, no further reconsideration or review of the matter will be undertaken by the Director.

In order to qualify for special status, the following requirements must be met. 1) The application must have no more than 3 independent claims and no more than 20 total claims. 2) The application must not contain any multiple dependent claims. 3) The petition must state the basis for seeking special status, i.e., the claimed invention either: A) materially enhances the quality of the environment or B) materially contributes to: i) the discovery or development of renewable energy resources, ii) the more efficient utilization and conservation of energy resources, or iii)

greenhouse gas emission reduction. 4) If the disclosure is not clear on its face that the claimed invention materially contributes under category (A) or (B), the petition must be accompanied by a statement by the applicant, assignee, or an attorney/agent registered to practice before the Office explaining how the materiality standard is met. 5) A statement that applicant will agree to make an election without traverse in a telephonic interview if a restriction requirement is made by the examiner. 6) The petition to make special must be filed electronically. 7) The petition must be filed at least one day prior to the date that a first Office Action appears in the Patent Application Information Retrieval (PAIR) system. 8) The petition must be accompanied by a request for early publication in compliance with 37 CFR 1.219 and include the publication fee as set forth in 37 CFR 1.18(d).

The requirement for a fee for consideration of the petition to make special for applications pertaining to Green Technologies has been waived.

The instant petition complies with items 1 – 8 above. Accordingly, the above-identified application has been accorded "special" status.

Telephone inquires concerning this decision should be directed to Henry C. Yuen at 571-272-4856.

This application will be forwarded to the Technology Center Art Unit 3745 for action on the merits commensurate with this decision.

/Henry C. Yuen/

Henry C. Yuen
Quality Assurance Specialist
Technology Center TC 3700

UNITED STATES PATENT AND TRADEMARK OFFICE

Commissioner for Patents
United States Patent and Trademark Office
P.O. Box 1450
Alexandria, VA 22313-1450
www.uspto.gov

MAILED
FEB 13 2012
OFFICE OF PETITIONS

Buchanan Nipper LLC
P.O. Box 700
Perrysburg OH 43552-0700

In re Application of
Jessup, et al.
Application No. 12/977,751
Filed: December 23, 2010
Atty. Dkt. No.: 1106-017

: DECISION ON PETITION

This is a decision on the petition under the unintentional provisions of 37 CFR 1.137(b), filed January 20, 2012, to revive the above-identified application.

The petition is GRANTED.

The application became abandoned March 12, 2011 for failure to timely submit a proper reply to the Notice of File Missing Parts (Notice) mailed January 11, 2011. The Notice set a two month shortened statutory period of time for reply. Notice of Abandonment was mailed January 19, 2012.

A grantable petition under 37 CFR 1.137(b) must be accompanied by: (1) the required reply, unless previously filed; (2) the petition fee as set forth in 37 CFR 1.17(m); (3) a statement that the entire delay in filing the required reply from the due date for the reply until the filing of a grantable petition pursuant to 37 CFR 1.137(b) was unintentional; and (4) any terminal disclaimer (and fee as set forth in 37 CFR 1.20(d)) required by 37 CFR 1.137(d). Where there is a question as to whether either the abandonment or the delay in filing a petition under 37 CFR 1.137 was unintentional, the Director may require additional information. See MPEP 711.03(c)(II)(C) and (D).

There is no indication that the petition is signed by a registered patent attorney or patent agent of record. However, in accordance with 37 CFR 1.34, practitioner's signature appearing on the correspondence shall constitute a representation to the United States Patent and Trademark Office that he is authorized to represent the particular party in whose behalf he acts. If practitioner desires to receive correspondence regarding this file, the appropriate power of attorney documents must be submitted. A courtesy copy of this decision is being mailed to practitioner, the petitioner herein. However, until otherwise instructed, all future correspondence regarding this application file will be directed solely to the above-noted correspondence address of record.

The instant petition has been carefully reviewed and found in compliance with the requirements set forth above.

This application is being directed to the Office of Patent Application Processing for further processing.

*/ALESIA M. BROWN/*

Alesia M. Brown
Attorney Advisor
Office of Petitions

CC: STEPHEN NIPPER
Buchanan Nipper LLC
913 S. Allante Pl.
Boise, ID 83709

**IN THE UNITED STATES PATENT AND TRADEMARK OFFICE**

| | |
|---|---|
| **First Named Inventor:** | ) |
| **Confirmation No.: 1002** | ) |
| | ) |
| **Serial No.: 12/977,792** | ) |
| | ) |
| **Filing Date: 12-23-2010** | ) |
| | ) |
| **Atty Docket No.: 247249-1 (22402-257)** | ) |

Commissioner for Patents
P.O. Box 1450
Alexandria, VA 22313-1450

**Statement Concerning the Basis for the Special Status**

SIR:

Applicant respectfully submits that Special Status is sought on the basis that the present invention materially contributes to the development of renewable energy resources or energy conservation.

The undersigned attorney may be contacted at the number below to facilitate the resolution of any matters. Please charge any fees that are incurred in connection with this Statement to deposit account no. 09-0470.

Respectfully submitted,

General Electric Company

By : /Allison W Mages/
Allison Weiner Mages
Reg. No. 57,275

Dated: July 14, 2011

GE Global Patent Operation
2 Corporate Drive, Suite 648
Shelton, CT 06484
203-944-6755

Doc Code: PET.GREEN
Document Description: Petition for Green Tech Pilot

PTO/SB/420 (03-11)

# PETITION TO MAKE SPECIAL UNDER THE GREEN TECHNOLOGY PILOT PROGRAM

| Attorney Docket Number: 247249-1 (22402-257) | Application Number (if known): 12/977,792 | Filing date: 12-23-2010 |
|---|---|---|

First Named Inventor: John Mihok

Title: SYSTEM AND METHOD FOR DETECTING ANAMOLIES IN WIND TURBINES

**APPLICANT HEREBY REQUESTS TO PARTICIPATE IN THE GREEN TECHNOLOGY PILOT PROGRAM FOR THE ABOVE-IDENTIFIED APPLICATION. See Instruction Sheet on page 2.**

This petition must be timely filed electronically using the USPTO electronic filing system, EFS-Web.

1. By filing this petition:

   **Applicant is requesting early publication: Applicant hereby requests early publication under 37 CFR 1.219 and the publication fee set forth in 37 CFR 1.18(d) accompanies this request.**

2. By filing this petition: applicant is agreeing to make an election without traverse in a telephonic interview and elect an invention that meets the eligibility requirements for the Green Technology Pilot Program, if the Office determines that the claims are not obviously directed to a single invention. See Instruction Sheet.

3. This request is accompanied by statements of special status for the eligibility requirement.

4. The application contains no more than three (3) independent claims and twenty (20) total claims.

5. The application does not contain any multiple dependent claims.

6. Other attachments: Statement Concerning the Basis for the Special Status

| Signature /Allison W. Mages/ | Date |
|---|---|
| Name (Print/Typed) Allison W. Mages | Registration Number 57,275 |

*Note: Signatures of all the inventors or assignees of record of the entire interest or their representative(s) are required in accordance with 37 CFR 1.33 and 11.18. Please see 37 CFR 1.4(d) for the form of the signature. If necessary, submit multiple forms for more than one signature, see below*.*

☐ *Total of _____ forms are submitted.

*If you need assistance in completing the form, call 1-800-PTO-9199 and select option 2.*

UNITED STATES PATENT AND TRADEMARK OFFICE

UNITED STATES DEPARTMENT OF COMMERCE
United States Patent and Trademark Office
Address: COMMISSIONER FOR PATENTS
P.O. Box 1450
Alexandria, Virginia 22313-1450
www.uspto.gov

| APPLICATION NO. | FILING DATE | FIRST NAMED INVENTOR | ATTORNEY DOCKET NO. | CONFIRMATION NO. |
|---|---|---|---|---|
| 12/977,792 | 12/23/2010 | John Mihok | 247249 (22402-257) | 1002 |

45432 7590 08/01/2011
PATRICK W. RASCHE (22402)
ARMSTRONG TEASDALE LLP
7700 Forsyth Boulevard
Suite 1800
St. Louis, MO 63105

| EXAMINER |
|---|

| ART UNIT | PAPER NUMBER |
|---|---|
| 2857 | |

| NOTIFICATION DATE | DELIVERY MODE |
|---|---|
| 08/01/2011 | ELECTRONIC |

**Please find below and/or attached an Office communication concerning this application or proceeding.**

The time period for reply, if any, is set in the attached communication.

Notice of the Office communication was sent electronically on above-indicated "Notification Date" to the following e-mail address(es):

uspatents@armstrongteasdale.com

UNITED STATES PATENT AND TRADEMARK OFFICE

Commissioner for Patents
United States Patent and Trademark Office
P.O. Box 1450
Alexandria, VA 22313-1450
www.uspto.gov

PATRICK W. RASCHE (22402)
ARMSTRONG TEASDALE LLP
7700 Forsyth Boulevard
Suite 1800
St. Louis MO 63105

| | | |
|---|---|---|
| In re Application of | : | |
| MIHOK et al. | : | DECISION ON PETITION |
| Application No. 12/977792 | : | TO MAKE SPECIAL UNDER |
| Filed: December 23, 2010 | : | THE GREEN TECHNOLOGY |
| Attorney Docket No. 247249 (22402-257) | : | PILOT PROGRAM |

This is a decision on the petition under 37 CFR 1.102, filed on July 14, 2011, to make the above-identified application special under the pilot program for applications pertaining to Green Technologies as set forth 74 Federal Register Notice 64666 (December 8, 2009) and amended by 75 Federal Register Notice 28554 (May 21, 2010) and 75 Federal Register Notice 69049 (November 10, 2010).

The petition is **GRANTED**.

A grantable petition to make an application special under 37 CFR 1.102 and the pilot program as set forth in 74 FR 64666 must be directed to a nonprovisional application filed under 35 USC 111(a) or be a national stage entry under 35 USC 371, exclusive of any reissue applications.

In order to qualify for special status, the following requirements must be met. 1) The application must have no more than 3 independent claims and no more than 20 total claims. 2) The application must not contain any multiple dependent claims. 3) The petition must state the basis for seeking special status, i.e., the claimed invention either: A) materially enhances the quality of the environment or B) materially contributes to: i) the discovery or development of renewable energy resources, ii) the more efficient utilization and conservation of energy resources, or iii) greenhouse gas emission reduction. 4) If the disclosure is not clear on its face that the claimed invention materially contributes under category (A) or (B), the petition must be accompanied by a statement by the applicant, assignee, or an attorney/agent registered to practice before the Office explaining how the materiality standard is met. 5) A statement that applicant will agree to make an election without traverse in a telephonic interview if a restriction requirement is made by the examiner. 6) The petition to make special must be filed electronically. 7) The petition must be filed at least one day prior to the date that a first Office Action appears in the Patent Application Information Retrieval (PAIR) system. 8) The petition must be accompanied by a request for early publication in compliance with 37 CFR 1.219 and include the publication fee as set forth in 37 CFR 1.18(d).

The requirement for a fee for consideration of the petition to make special for applications pertaining to Green Technologies has been waived.

The instant petition complies with items 1 – 8 above. Accordingly, the above-identified application has been accorded "special" status.

Telephone inquires concerning this decision should be directed to Colleen Dunn at 571-272-1170.

The application is being forwarded to the appropriate Technology Center Art Unit for action on the merits commensurate with this decision.

/Colleen Dunn/

Colleen Dunn
Quality Assurance Specialist
Technology Center 2800

UNITED STATES PATENT AND TRADEMARK OFFICE

Commissioner for Patents
United States Patent and Trademark Office
P.O. Box 1450
Alexandria, VA 22313-1450
www.uspto.gov

In re Application of
Stephen D. Shoap

Application No. 12977858

Filed:

Attorney Docket No. SHOAP 10.10

:DECISION ON PETITION TO MAKE SPECIAL
:UNDER 37 CFR 1.102(c)(1)

This is a decision on the electronic petition under 37 CFR 1.102 (c)(1), filed 05-JAN-2011 to make the above-identified application special based on applicant's age as set forth in MPEP § 708.02, Section IV.

The petition is **GRANTED**.

A grantable petition to make an application special under 37 CFR 1.102(c)(1), MPEP § 708.02, Section IV: Applicant's Age must include a statement by applicant or a registered practitioner having evidence that applicant is at least 65 years of age. No fee is required.

Accordingly, the above-identified application has been accorded "special" status and will be taken up for action by the examiner upon the completion of all pre-examination processing.

Telephone inquiries concerning this electronic decision should be directed to the Electronic Business Center at 866-217-9197.

All other inquiries concerning either the examination or status of the application should be directed to the Technology Center.

PTO/SB/20PCT-EP (05-10)
Approved for use through 01/31/2012. OMB 0651-0058
U.S. Patent and Trademark Office; U. S. DEPARTMENT OF COMMERCE
Under the Paperwork Reduction Act of 1995, no persons are required to respond to a collection of information unless it displays a valid OMB control number.

# REQUEST FOR PARTICIPATION IN THE PATENT COOPERATION TREATY - PATENT PROSECUTION HIGHWAY (PCT-PPH) PILOT PROGRAM BETWEEN THE EUROPEAN PATENT OFFICE (EPO) AND THE USPTO

| | | | |
|---|---|---|---|
| Application No: | 12/977,914 | Filing date: | December 23, 2010 |
| First Named Inventor: | Lennart Balgard | | |
| Title of the Invention: | Configuring Of An Intelligent Electronic Device | | |

**THIS REQUEST FOR PARTICIPATION IN THE PCT-PPH PILOT PROGRAM ALONG WITH THE REQUIRED DOCUMENTS MUST BE SUBMITTED VIA EFS-WEB. INFORMATION REGARDING EFS-WEB IS AVAILABLE AT HTTP://WWW.USPTO.GOV/EBC/EFS_HELP.HTML**

**APPLICANT HEREBY REQUESTS PARTICIPATION IN THE PCT-PPH PROGRAM AND PETITIONS TO MAKE THE ABOVE-IDENTIFIED APPLICATION SPECIAL UNDER THE PCT-PPH PROGRAM.**

The above-identified application is (1) a national stage entry of the corresponding PCT application, or (2) a national stage entry of another PCT application which claims priority to the corresponding PCT application, or (3) a national application that claims domestic/ foreign priority to the corresponding PCT application, or (4) a national application which forms the basis for the priority claim in the corresponding PCT application, or (5) a continuing application of a U.S. application that satisfies one of (1) to (4) above, or (6) a U.S. application that claims domestic benefit to a U.S. provisional application which forms the basis for the priority claim in the corresponding PCT application.

**The corresponding PCT application number(s) is/are:** PCT/EP2009/058021

**The international filing date of the corresponding PCT application(s) is/are:**

June 26, 2009

**I. List of Required Documents:**

a. **A copy of the latest international work product (WO/ISA, WO/IPEA, or IPER) in the above–identified corresponding PCT application(s)**

- [x] Is attached
- [ ] Is not attached because the document is already in the U.S. application.

b. **A copy of all claims which were indicated as having novelty, inventive step and industrial applicability in the above-identified corresponding PCT application(s).**

- [x] Is attached.
- [ ] Is not attached because the document is already in the U.S. application.

c. **English translations of the documents in a. and b. above are attached (if the documents are not in the English language). A statement that the English translation is accurate is attached for the document in b. above.**



This collection of information is required by 35 U.S.C. 119, 37 CFR 1.55, and 37 CFR 1.102(d). The information is required to obtain or retain a benefit by the public, which is to file (and by the USPTO to process) an application. Confidentiality is governed by 35 U.S.C. 122 and 37 CFR 1.11 and 1.14. This collection is estimated to take 2 hours to complete, including gathering, preparing, and submitting the completed application form to the USPTO. Time will vary depending upon the individual case. Any comments on the amount of time you require to complete this form and/or suggestions for reducing this burden should be sent to the Chief Information Officer, U.S. Patent and Trademark Office, U.S. Department of Commerce, P.O. Box 1450, Alexandria, VA 22313-1450. DO NOT SEND FEES OR COMPLETED FORMS TO THIS ADDRESS.

Approved for use through 01/31/2012. OMB 0651-0058
U.S.Patent and Trademark Office; U.S. DEPARTMENT OF COMMERCE
Under the Paperwork Reduction Act of 1995, no persons are required to respond to a collection of information unless it displays a valid OMB control number.

# REQUEST FOR PARTICIPATION IN THE PCT-PPH PILOT PROGRAM BETWEEN THE EPO AND THE USPTO

(continued)

| | |
|---|---|
| Application No.: | 12/977,914 |
| First Named Inventor: | Lennart Balgard |

d. **(1) An information disclosure statement listing the documents cited in the international work products (ISR, WO/ISA, WO/IPEA, IPER) of the corresponding PCT application.**

☐ Is attached

☒ Has already been filed in the above-identified U.S. application on December 23, 2010

**(2) Copies of all documents (except) for U.S. patents or U.S. patent application publications)**

☐ Are attached.

☒ Have already been filed in the above-identified U.S. application on December 23, 2010

**II. Claims Correspondence Table:**

| Claims in US Application | Patentable Claims in the corresponding PCT Application | Explanation regarding the correspondence |
|---|---|---|
| 1 | 1 | Corresponding claim (same) |
| 2 | 2 | Corresponding claim (same) |
| 3 | 3 | Corresponding claim (single dependency) |
| 4 | 4 | Corresponding claim (single dependency) |
| 5 | 5 | Corresponding claim (single dependency) |
| 6 | 6 | Corresponding claim (single dependency) |
| 7 | 7 | Corresponding claim (single dependency) |
| 8 | 8 | Corresponding claim (single dependency) |
| 9 | 9 | Corresponding claim (single dependency) |
| 10 | 10 | Corresponding claim (same) |
| 11 | 11 | Corresponding claim (same) |
| 12 | 12 | Corresponding claim (single dependency) |
| 13 | 13 | Corresponding claim (single dependency) |
| 14 | 14 | Corresponding claim (single dependency) |
| 15 | 15 | Corresponding claim (single dependency) |
| 16 | 16 | Corresponding claim (single dependency) |
| 17 | 17 | Corresponding claim (single dependency) |
| | | |
| | | |

**III. All the claims in the US application sufficiently correspond to the patentable claims in the corresponding PCT application.**

| | |
|---|---|
| Signature /Wesley W. Whitmyer, Jr./ | Date April 6, 2011 |
| Name (Print/Typed) Wesley W. Whitmyer, Jr. | Registration Number 33,558 |

# Privacy Act Statement

The **Privacy Act of 1974 (P.L. 93-579)** requires that you be given certain information in connection with your submission of the attached form related to a patent application or patent. Accordingly, pursuant to the requirements of the Act, please be advised that: (1) the general authority for the collection of this information is 35 U.S.C. 2(b)(2); (2) furnishing of the information solicited is voluntary; and (3) the principal purpose for which the information is used by the U.S. Patent and Trademark Office is to process and/or examine your submission related to a patent application or patent. If you do not furnish the requested information, the U.S. Patent and Trademark Office may not be able to process and/or examine your submission, which may result in termination of proceedings or abandonment of the application or expiration of the patent.

The information provided by you in this form will be subject to the following routine uses:

1. The information on this form will be treated confidentially to the extent allowed under the Freedom of Information Act (5 U.S.C. 552) and the Privacy Act (5 U.S.C 552a). Records from this system of records may be disclosed to the Department of Justice to determine whether disclosure of these records is required by the Freedom of Information Act.
2. A record from this system of records may be disclosed, as a routine use, in the course of presenting evidence to a court, magistrate, or administrative tribunal, including disclosures to opposing counsel in the course of settlement negotiations.
3. A record in this system of records may be disclosed, as a routine use, to a Member of Congress submitting a request involving an individual, to whom the record pertains, when the individual has requested assistance from the Member with respect to the subject matter of the record.
4. A record in this system of records may be disclosed, as a routine use, to a contractor of the Agency having need for the information in order to perform a contract. Recipients of information shall be required to comply with the requirements of the Privacy Act of 1974, as amended, pursuant to 5 U.S.C. 552a(m).
5. A record related to an International Application filed under the Patent Cooperation Treaty in this system of records may be disclosed, as a routine use, to the International Bureau of the World Intellectual Property Organization, pursuant to the Patent Cooperation Treaty.
6. A record in this system of records may be disclosed, as a routine use, to another federal agency for purposes of National Security review (35 U.S.C. 181) and for review pursuant to the Atomic Energy Act (42 U.S.C. 218(c)).
7. A record from this system of records may be disclosed, as a routine use, to the Administrator, General Services, or his/her designee, during an inspection of records conducted by GSA as part of that agency's responsibility to recommend improvements in records management practices and programs, under authority of 44 U.S.C. 2904 and 2906. Such disclosure shall be made in accordance with the GSA regulations governing inspection of records for this purpose, and any other relevant ( *i.e.*, GSA or Commerce) directive. Such disclosure shall not be used to make determinations about individuals.
8. A record from this system of records may be disclosed, as a routine use, to the public after either publication of the application pursuant to 35 U.S.C. 122(b) or issuance of a patent pursuant to 35 U.S.C. 151. Further, a record may be disclosed, subject to the limitations of 37 CFR 1.14, as a routine use, to the public if the record was filed in an application which became abandoned or in which the proceedings were terminated and which application is referenced by either a published application, an application open to public inspection or an issued patent.
9. A record from this system of records may be disclosed, as a routine use, to a Federal, State, or local law enforcement agency, if the USPTO becomes aware of a violation or potential violation of law or regulation.

*PATENT*
04189-P0055A WWW

**IN THE UNITED STATES PATENT AND TRADEMARK OFFICE**

| | |
|---|---|
| Applicants | Lennart Balgard, *et al.* |
| Application No. 12/977,914 | Filing Date: December 23, 2010 |
| Title of Application: | Configuring Of An Intelligent Electronic Device |
| Confirmation No. 1229 | |
| | |

Mail Stop Amendment
Commissioner for Patents
Post Office Box 1450
Alexandria, VA 22313-1450

**Request To Participate In Patent Prosecution Highway (PPH)**

Filed herewith is form PTO/SB/20PCT-EP requesting participation in the PPH program and petitioning to make special U.S. Patent Application 12/977,914.

U.S. Pat. App. 12/977,914 is a continuation of, and claims priority from, PCT application PCT/EP2009/058021, filed on June 26, 2009. Applicant seeks accelerated examination under the PPH Program because corresponding claims in the PCT application have been found patentable in an International Preliminary Report on Patentability (IPRP) issued by the European Patent Office.

Filed herewith is a copy of the IPRP dated January 5, 2011, indicating that claims 1-17 were found to have novelty, inventive step and industrial applicability. Also filed herewith is a copy of claims 1-17 from PCT/EP2009/058021 publication WO 2009/156497.

The reference cited in the IPRP was submitted to the Office in an IDS on December 23, 2010.

The claims of U.S. Pat. App. 12/977,914 have been amended to conform with U.S. claim format requirements. All claims correspond to claims found patentable in the

IPRP and are believed to have similar or more limited scope, as shown in the claims correspondence table in form PTO/SB/20PCT-EP.

Applicant's request to participate in the Patent Prosecution Highway and petition to make special is believed to be in condition for granting and a favorable decision is hereby requested.

Applicant believes that no fee is due in connection with the filing of this request. However, if any fee is due, please charge Deposit Account No. 19-4516.

Respectfully submitted,

/ Wesley W. Whitmyer, Jr.,/

April 6, 2011

Wesley W. Whitmyer, Jr., Registration No. 33,558
Stephen Ball, Registration No. 59,169
Attorney for Applicants
ST.ONGE STEWARD JOHNSTON & REENS LLC
986 Bedford Street
Stamford, CT 06905-5619
Tel. 203 324-6155

# PATENT COOPERATION TREATY

# PCT

## INTERNATIONAL PRELIMINARY REPORT ON PATENTABILITY

(Chapter I of the Patent Cooperation Treaty)

(PCT Rule 44*bis*)

| | | |
|---|---|---|
| Applicant's or agent's file reference<br>10444WO/HK | **FOR FURTHER ACTION** | See item 4 below |
| International application No.<br>PCT/EP2009/058021 | International filing date *(day/month/year)*<br>26 June 2009 (26.06.2009) | Priority date *(day/month/year)*<br>26 June 2008 (26.06.2008) |
| International Patent Classification (8th edition unless older edition indicated)<br>See relevant information in Form PCT/ISA/237 | | |
| Applicant<br>ABB RESEARCH LTD | | |

1. This international preliminary report on patentability (Chapter I) is issued by the International Bureau on behalf of the International Searching Authority under Rule 44 *bis*.1(a).

2. This REPORT consists of a total of 8 sheets, including this cover sheet.

   In the attached sheets, any reference to the written opinion of the International Searching Authority should be read as a reference to the international preliminary report on patentability (Chapter I) instead.

3. This report contains indications relating to the following items:

| | | |
|---|---|---|
| ☒ | Box No. I | Basis of the report |
| ☐ | Box No. II | Priority |
| ☐ | Box No. III | Non-establishment of opinion with regard to novelty, inventive step and industrial applicability |
| ☐ | Box No. IV | Lack of unity of invention |
| ☒ | Box No. V | Reasoned statement under Article 35(2) with regard to novelty, inventive step or industrial applicability; citations and explanations supporting such statement |
| ☐ | Box No. VI | Certain documents cited |
| ☒ | Box No. VII | Certain defects in the international application |
| ☐ | Box No. VIII | Certain observations on the international application |

4. The International Bureau will communicate this report to designated Offices in accordance with Rules 44*bis*.3(c) and 93*bis*.1 but not, except where the applicant makes an express request under Article 23(2), before the expiration of 30 months from the priority date (Rule 44*bis* .2).

| | |
|---|---|
| | Date of issuance of this report<br>05 January 2011 (05.01.2011) |
| The International Bureau of WIPO<br>34, chemin des Colombettes<br>1211 Geneva 20, Switzerland<br>Facsimile No. +41 22 338 82 70 | Authorized officer<br>Yolaine Cussac<br>e-mail: pt05.pct@wipo.int |

# PATENT COOPERATION TREATY

From the
INTERNATIONAL SEARCHING AUTHORITY

To:

see form PCT/ISA/220

# PCT

WRITTEN OPINION OF THE INTERNATIONAL SEARCHING AUTHORITY

(PCT Rule 43*bis*.1)

Date of mailing
*(day/month/year)* see form PCT/ISA/210 (second sheet)

Applicant's or agent's file reference
see form PCT/ISA/220

**FOR FURTHER ACTION**
See paragraph 2 below

| International application No. | International filing date *(day/month/year)* | Priority date *(day/month/year)* |
|---|---|---|
| PCT/EP2009/058021 | 26.06.2009 | 26.06.2008 |

International Patent Classification (IPC) or both national classification and IPC
INV. H04L12/24 H04L12/40

Applicant
ABB RESEARCH LTD

1. This opinion contains indications relating to the following items:

- ☒ Box No. I Basis of the opinion
- ☐ Box No. II Priority
- ☐ Box No. III Non-establishment of opinion with regard to novelty, inventive step and industrial applicability
- ☐ Box No. IV Lack of unity of invention
- ☒ Box No. V Reasoned statement under Rule 43*bis*.1(a)(i) with regard to novelty, inventive step or industrial applicability; citations and explanations supporting such statement
- ☐ Box No. VI Certain documents cited
- ☒ Box No. VII Certain defects in the international application
- ☐ Box No. VIII Certain observations on the international application

2. **FURTHER ACTION**

If a demand for international preliminary examination is made, this opinion will usually be considered to be a written opinion of the International Preliminary Examining Authority ("IPEA") except that this does not apply where the applicant chooses an Authority other than this one to be the IPEA and the chosen IPEA has notifed the International Bureau under Rule 66.1*bis*(b) that written opinions of this International Searching Authority will not be so considered.

If this opinion is, as provided above, considered to be a written opinion of the IPEA, the applicant is invited to submit to the IPEA a written reply together, where appropriate, with amendments, before the expiration of 3 months from the date of mailing of Form PCT/ISA/220 or before the expiration of 22 months from the priority date, whichever expires later.

For further options, see Form PCT/ISA/220.

3. For further details, see notes to Form PCT/ISA/220.

| Name and mailing address of the ISA: | Date of completion of this opinion | Authorized Officer |
|---|---|---|
| European Patent Office<br>D-80298 Munich<br>Tel. +49 89 2399 - 0<br>Fax: +49 89 2399 - 4465 | see form PCT/ISA/210 | Mircescu, Alexander<br>Telephone No. +49 89 2399-7645 |

**WRITTEN OPINION OF THE INTERNATIONAL SEARCHING AUTHORITY**

International application No.
PCT/EP2009/058021

**Box No. I Basis of the opinion**

1. With regard to the **language**, this opinion has been established on the basis of:

   ☒ the international application in the language in which it was filed

   ☐ a translation of the international application into , which is the language of a translation furnished for the purposes of international search (Rules 12.3(a) and 23.1 (b)).

2. ☐ This opinion has been established taking into account the **rectification of an obvious mistake** authorized by or notified to this Authority under Rule 91 (Rule 43bis.1(a))

3. With regard to any **nucleotide and/or amino acid sequence** disclosed in the international application and necessary to the claimed invention, this opinion has been established on the basis of:

   a. type of material:

   ☐ a sequence listing

   ☐ table(s) related to the sequence listing

   b. format of material:

   ☐ on paper

   ☐ in electronic form

   c. time of filing/furnishing:

   ☐ contained in the international application as filed.

   ☐ filed together with the international application in electronic form.

   ☐ furnished subsequently to this Authority for the purposes of search.

4. ☐ In addition, in the case that more than one version or copy of a sequence listing and/or table relating thereto has been filed or furnished, the required statements that the information in the subsequent or additional copies is identical to that in the application as filed or does not go beyond the application as filed, as appropriate, were furnished.

5. Additional comments:

**Box No. V Reasoned statement under Rule 43*bis*.1(a)(i) with regard to novelty, inventive step or industrial applicability; citations and explanations supporting such statement**

1. Statement

| | | | |
|---|---|---|---|
| Novelty (N) | Yes: | Claims | 1-17 |
| | No: | Claims | |
| Inventive step (IS) | Yes: | Claims | 1-17 |
| | No: | Claims | |
| Industrial applicability (IA) | Yes: | Claims | 1-17 |
| | No: | Claims | |

2. Citations and explanations

**see separate sheet**

**Box No. VII Certain defects in the international application**

The following defects in the form or contents of the international application have been noted:

**see separate sheet**

Following document is referenced to:

D1: DE 10 2004 062967 A1 (ROELLGEN BERND [DE]) 6 July 2006 (2006-07-06)

## A. Citations and Explanations with Respect to Item V

1. It appears appropriate, for technical reasons, to discuss claim 10 before claim 1. The present invention is defined in claim 10 as a method for

   (a) activating a function in an electronic device,
   (a)(i) the electronic device comprising a number of hardware modules connected via an inter-module bus,
   (a)(ii) the hardware modules implementing a process control module for handling protection and/or control functions, the method comprising the steps of
   (b) sensing the types of hardware modules connected to the inter-module bus,
   (c) obtaining set-up data from an external portable data carrier including configuration data relating to a protection and/or control function implemented by the process control module of (a)(ii) as well as verification data including hardware type data,
   (d) comparing the obtained verification data of (c) with own verification data including data regarding the sensed hardware type obtained in step (b),
   (e) activating the control and/or protection function only if there is a match between all verification data being compared in step (d).

   Claim 1 defines an electronic device consisting of several device features, said features being adapted to perform all the method steps (a)-(e) of claim 1.

   Dependent claims 2-9 and 11-17 define further implementation details of the invention.

2. The closest prior art which, in the present case, already represents the entire prior art is given by document DE-A1-102004062967 (D1). D1 discloses a method for configuring and activating an electronic device by a controller. The controller addresses each device and reads out the device configuration parameters. Said

parameters are compared with parameters of a data base such that the controller determines which parameter set is optimal with respect to prespecified rules. Then, the optimal parameter set is installed in each electronic device. Finally, each electronic device is activated.

Contrary to the present invention, D1 does not teach to obtain verification data from a carrier/data base [feature (c)], to compare said verification data with sensed verification data [feature (d)], and to activate the device only if there is a total match between the compared verification data [feature (e)].

3. The difference between the subject matter of claim 10 and the disclosure of D1 is given by the elements of the feature set S={(c),(d),(e)}. The novelty (Art 33(1),(2) PCT) of the subject matter of claim 10 (hence also of claim 1 by correspondence to claim 10) is concluded a fortiori. The novelty (Art 33(1),(2) PCT) of the subject matter of dependent claims 2-9 and 11-17 is concluded a fortiori.

4. The objective problem (P) to be solved by the present invention is

   (P) the simplification of the method for activating an electronic device with simultaneous consideration of assuring the correct device functionality in case of a device activation.

5. (P) is solved by the elements of S for the following reasons. The three steps of obtaining verification data from a carrier/data base, comparing said data with sensed verification data and deciding to activate the device only if the comparison leads to a total match, define an algorithm for activating an electronic device which is simpler than the algorithm of D1 where the controller has to compute an optimized configuration parameter set and to install said set in each device before activating the devices, needing much more than three steps to achieve its functionality. Nevertheless, the algorithm of the present invention ensures that when a device is activated the activated device function is correctly working since the comparison of the verification data lead to a correct result (a total match). This already shows that the elements of S offer a solution of (P).

6. Since (P) evidently possesses a plurality of solutions and since the solution of (P) given by the elements of S is not rendered obvious by a hint in D1, the inventive

step (Art 33(1),(3) PCT) of the subject matter of claim 10 (hence also of claim 1 by correspondence to claim 10) is a fortiori concluded. The inventive step (Art 33(1),(3) PCT) of the subject matter of dependent claims 2-9 and 11-17 is concluded a fortiori.

7. The implementation of the technical apparatuses defined in claims 1-9 and the implementation of the technical processes defined in claims 10-17 requires resources for the processing, transmission, and storage of information. There are no requirements with respect to the performance of the resources for the processing, transmission, and storage of information, or with respect to the storage capacity of the resources for the storage of information.

   Therefore, the technical apparatuses defined in claims 1-9 and the technical processes defined in claims 10-17 can be realised by commercially available resources for the processing, transmission and storage of information. Hence, the technical apparatuses defined in claims 1-9 and the technical processes defined in claims 10-17 are susceptible of industrial application (Art 33(1),(4) PCT).

**B. Explanations with Respect to Item VII**

1. The applicant's attention is drawn to the following matters, which should as well be considered:

1.1 To meet the requirements of Rule 5.1(a)(ii) PCT, the relevant background art disclosed in document D1 should be acknowledged in the description.

1.2 The opening part of the description should be brought into conformity with the wording of any new or amended independent claim, Rule 5.1(a)(iii) PCT.

1.3 To meet the requirements of Rule 6.3(b) PCT, any independent claim should be correctly cast in the two-part form, with those features which in combination are part of the nearest prior art being placed in the preamble. Hence, the "characterized in that" expression should be introduced after feature (b) of claim 10 and the corresponding feature of claim 1.

2. The attention of the applicant is drawn to the fact that the application may not be

amended in such a way that it contains subject matter which extends beyond the content of the application as filed (Art 34(2)(b) PCT).

In his letter of reply, the applicant should indicate the parts of the originally filed application serving as a basis for subject matter newly introduced into the claims.

3. The applicant is requested to file amendments by way of replacement pages in accordance with Rule 66.8 PCT.

CLAIMS

1. An intelligent electronic device (12) for provision in Substation Automation or Distribution Automation systems (10) and comprising:

- an inter-module bus (26),
- a first interface (30) to an external portable data carrier (34), and
- a number of hardware modules (18, 20, 22, 24) connected to each other via said inter-module bus (26), said modules implementing various functions of the device and including a process control module (18) for handling at least one protection and/or control function,
- said process control module (18) including
  - a second interface (32) to the inter-module bus (26), and
  - a control unit (28) arranged to
    - sense, via said second interface (32), the types (T1, T2, T3, T4) of hardware modules connected to the inter-module bus,
    - obtain set-up data (36) from an external portable data carrier (34) connected to the first interface, said set-up data including configuration data relating to a protection and/or control function implemented by the process control module as well as verification data, said obtained verification data including hardware type data (T1*, T2*, T3*, T4*) relating to the modules in the device,
    - compare the obtained verification data with own verification data, which own verification data

includes data regarding the sensed hardware type, and

- activate the protection and/or control function only if there is a match between all verification data being compared.

2. A device (14) according to claim 1, wherein said number of hardware modules (18, 20, 22, 24) are being connected to each other at different positions of said inter-module bus (26), the control unit of the process control module is further arranged to sense, via said second interface (32), the positions (P1, P2, P3, P4) of the hardware modules on the inter-module bus, said obtained verification data also includes position type data (P1*, P2*, P3*, P4*) relating to the modules in the device and the own verification data includes data regarding the sensed hardware module positions.

3. A device (14) according to claim 1 or 2, wherein the obtained verification data includes a device identifier and the own verification data includes a pre-stored device identifier.

4. A device (12) according to any previous claim, wherein the control unit (28) is arranged to detect the data carrier being connected to the first interface and to obtain said set-up data based on this detecting.

5. A device (12) according to any previous claim, wherein the control unit (28) is further arranged to implement the configuration of the protection and/or

control function if there is a match between all verification data being compared.

6. A device (12) according to any previous claim, wherein the control unit (28) is further arranged to indicate that there is a mismatch if any verification data being compared do not match.

7. A device (12) according to any previous claim, wherein the control unit (28) is further arranged to store own verification data on the portable data carrier if any verification data being compared do not match.

8. A device (12) according to any previous claim, further comprising a power supply module (16) providing power to the other modules of the device.

9. A device (12) according to any previous claim, wherein the control unit is arranged to perform said sensing at power up of the device.

10. A method for activating a function in an intelligent electronic device (12) provided in a Substation Automation or Distribution Automation system (10), the intelligent electronic device comprising a number of hardware modules (18, 20, 22, 24) connected to each other via an inter-module bus (26), said modules implementing various functions of the device and including a process control module (18) for handling at least one protection and/or control function of the device, the method comprising the steps of:

- sensing (38) the types (T1, T2, T3, T4) of hardware modules connected to the inter-module bus (26),
- obtaining (42) set-up data (36) from an external portable data carrier (34), said set-up data including configuration data relating to a protection and/or control function implemented by the process control module as well as verification data, said obtained verification data including hardware type data (T1*, T2*, T3*, T4*) relating to the modules in the device,
- comparing (44) the obtained verification data with own verification data, which own verification data includes data regarding the sensed hardware type, and
- activating (52) the control and/or protection function only if there is a match (46) between all verification data being compared.

11. A method according to claim 10,wherein said number of hardware modules (18, 20, 22, 24) are being connected to each other at different positions of said inter-module bus (26), the step of sensing further comprises sensing the positions (P1, P2, P3, P4) of the hardware modules on the inter-module bus, said obtained verification data also includes position type data (P1*, P2*, P3*, P4*) relating to the modules in the device and the own verification data includes data regarding the sensed hardware module positions.

12. A method according to claim 10 or 11, wherein the obtained verification data includes a device identifier and the own verification data includes a pre-stored device identifier.

13. A method according to any of claims 10 - 12,further comprising the step of detecting (40) the data carrier (34) being connected to the intelligent electronic device (12) and performing the step of obtaining said set-up data based on this detecting.

14. A method according to any of claims 10 - 13, further comprising the step of implementing (50) the configuration of the protection and/or control function if there is a match (46) between all verification data being compared.

15. A method according to any of claims 10 - 14, further comprising the step of indicating (48) that there is a mismatch if any verification data being compared does not match (46).

16. A method according to any of claims 10 - 15, further comprising the step of storing own verification data on the portable data carrier (34) if any verification data being compared does not match.

17. A method according to any of claims 10 - 16, wherein the step of sensing is performed at power up of the device.

UNITED STATES PATENT AND TRADEMARK OFFICE

UNITED STATES DEPARTMENT OF COMMERCE
United States Patent and Trademark Office
Address: COMMISSIONER FOR PATENTS
P.O. Box 1450
Alexandria, Virginia 22313-1450
www.uspto.gov

| APPLICATION NO. | FILING DATE | FIRST NAMED INVENTOR | ATTORNEY DOCKET NO. | CONFIRMATION NO. |
|---|---|---|---|---|
| 12/977,914 | 12/23/2010 | Lennart Balgard | 04189-P0055A | 1229 |

24126 7590 06/13/2011
ST. ONGE STEWARD JOHNSTON & REENS, LLC
986 BEDFORD STREET
STAMFORD, CT 06905-5619

| EXAMINER |
|---|
| TSAI, HENRY |

| ART UNIT | PAPER NUMBER |
|---|---|
| 2184 | |

| MAIL DATE | DELIVERY MODE |
|---|---|
| 06/13/2011 | PAPER |

**Please find below and/or attached an Office communication concerning this application or proceeding.**

The time period for reply, if any, is set in the attached communication.

UNITED STATES PATENT AND TRADEMARK OFFICE

Commissioner for Patents
United States Patent and Trademark Office
P.O. Box 1450
Alexandria, VA 22313-1450
www.uspto.gov

ST. ONGE STEWARD JOHNSTON & REENS, LLC
986 BEDFORD STREET
STAMFORD CT 06905-5619

In re Application of: BALGARD et al.
Application No. 12/977,914
Atty Docket #: 04189-P0055A
Filed: December 23, 2010
For: CONFIGURING OF AN INTELLIGENT ELECTRONIC DEVICE

DECISION ON REQUEST TO PARTICIPATE IN PATENT PROSECUTION HIGHWAY PROGRAM AND PETITION TO MAKE SPECIAL UNDER 37 CFR 1.102(a)

This is a decision on the request to participate in the PCT-Patent Prosecution Highway **(PCT-PPH)** pilot program and the petition under 37 CFR 1.102(a), filed April 6, 2011 to make the above- identified application special.

The petition is **GRANTED.**

A grantable request to participate in the PPH program and petition to make special require:

(1) The U.S. application is
(a) a national stage entry of the corresponding PCT application

Or

(b) a national application which forms the basis for the priority claim in the corresponding PCT application

Or

(c) *a* national stage entry of another PCT application (which can be filed in any competent receiving office) which claims priority to the corresponding PCT application

Or

(d) a national application claiming foreign domestic priority to the corresponding PCT application.
Applications subject to a secrecy order (35U.S.C.181) are excluded and not subject to participation in the PCT-PPH pilot program.

Or

(e) a continuing application (continuation, divisional, or continuation-in-part) of the U.S. application which satisfies one of the above (a) to (d) scenarios.

(2) The latest work product in the international phase of the PCT application corresponding to the U.S. application, namely the WO/ISA, or the WO/IPEA, or the IPER, indicates at least one claim in the PCT application has novelty, inventive step and industrial applicability. In case any observation is described in Box VIII of the WO/ISA, or the WO/IPEA, or the IPER which forms the basis for the PCT-PPH request, applicant must identify and explain why the claim(s) is/are not subject to any observation described in Box VIII irrespective of whether an amendment is submitted to correct the observation described in Box VIII. The U.S. application will not be eligible to participate in the PCT-PPH pilot program if applicant does not identify and explain why the claim(s) is/are not subject to the observation described in Box VIII.

Applicant may not file a request to participate in the PCT-PPH pilot program on the basis of an International Search Report (ISR) only.

(3) Applicant must:

a. Ensure all the claims in the U.S. application sufficiently correspond or be amended to sufficiently correspond to one or more of those claims indicated as having novelty, inventive step and industrial applicability and free of any observation described in Box VIII in the latest work product of the corresponding PCT application and

b. Submit a claims correspondence table in English;

The USPTO will accept claims written in dependent form in the U.S. application which are narrower in scope than the claims indicated as having novelty, inventive step and industrial applicability and free of any observation described in Box VIII in the latest work product of the corresponding PCT application.

(4) Substantive Examination of the U.S. application has not begun;

(5) Applicant must submit a copy of:

a. the latest international work product, WO/ISA, or WO/IPEA or PER, which indicated that the claim(s) has/have novelty, inventive step and industrial applicability along with an English translation thereof if the copy of the latest international work product is not in the English language, unless the U.S. application and the corresponding PCT application satisfy the relationship noted in (l )(a) above.

(6) Applicant must submit a copy of:

a. the claims from the corresponding PCT application which were indicated as having novelty, inventive step and industrial applicability in the latest work product of the PCT application,
b. an English translation of the claims and
c. a statement that the English translation is accurate.

If the claims in the U.S. application are identical to the claims from the corresponding PCT application, and are in the English language, applicant may just indicate such in the PCT-PPH request and it will not be necessary for applicant to submit a copy of the claims from the corresponding PCT application.

(7) Applicant must submit:

a. An IDS listing the documents cited in the work products in the international phase of the PCT application corresponding to the U.S. application, namely the WO/ISA, or the WO/IPEA, or the IPER,(unless already submitted in this application)
b. Copies of the documents except U.S. patents or U.S. patent application publications (unless already submitted in this application);

The request to participate in the PPH pilot program and petition are found to comply with the above requirements. Accordingly, the above-identified application has been accorded "special" status.

Telephone inquiries concerning this decision should be directed to Mano Padmanabhan at 571-272-4210.

All other inquiries concerning the examination or status of the application is accessible in the PAIR system at http://www.uspto.gov/ebc/index.html.

The application is being forwarded to the examiner for action on the merits commensurate with this decision.

/Mano Padmanabhan/

Mano Padmanabhan
Quality Assurance Specialist, Technology Center 2100, Workgroup 2180
571-272-4210

UNITED STATES PATENT AND TRADEMARK OFFICE

Commissioner for Patents
United States Patent and Trademark Office
P.O. Box 1450
Alexandria, VA 22313-1450
www.uspto.gov

MAILED
APR 13 2011
OFFICE OF PETITIONS

FITCH EVEN TABIN & FLANNERY
120 SOUTH LASALLE STREET
SUITE 1600
CHICAGO IL 60603-3406

| | | |
|---|---|---|
| In re Application of | : | |
| Sandstrom, et al. | : | |
| Application No. 12/977,968 | : | DECISION ON PETITION |
| Deposited: December 23, 2010 | : | |
| Attorney Docket No. 7115-98675 | : | |

This is a decision on the petition under 37 CFR 1.57(a), filed March 10, 2011, requesting that the above-identified application be accorded a filing date of December 23, 2010.

The petition under 37 CFR 1.57(a) is **DISMISSED**.

Any request for reconsideration of this decision must be submitted within TWO (2) MONTHS from the mail date of this decision. Extensions of time under 37 CFR 1.136(a) are permitted. The reconsideration request should include a cover letter entitled "Renewed Petition Under 37 CFR 1.57(a)." This is **not** a final agency decision within the meaning of 5 USC 704.

The instant application was deposited on December 23, 2010. However, the application omitted drawings. Accordingly, on January 12, 2011, the Office of Initial Patent Examination mailed a "Notice of Incomplete Nonprovisional Application", requiring drawings, as well as an executed oath or declaration, which was also not submitted on filing.

In response, petitioner filed the instant on March 10, 2011. Petitioner argues that the claims were incorporated by reference pursuant to a priority claim to provisional application No. 61/295,625.

With respect to the practice of incorporation by reference, the Manual of Patent Examining Procedure states:

> For applications filed on or after September 21, 2004, a claim under 35 U.S.C. 120 and 37 CFR 1.78 for benefit of a prior-filed nonprovisional application or international application designating the U.S. that was present on the filing date of the continuation or divisional application is considered an incorporation by reference of the prior-filed application as to inadvertently omitted material, subject to the conditions and requirements of 37 CFR 1.57(a). The purpose of 37 CFR 1.57(a) is to provide a safeguard for applicants when all or a portion of the specification and/or drawing(s) is (are) inadvertently omitted from an application.

The section goes on to state:

> For an application filed on or after September 21, 2004, if the material needed for a filing date is completely contained within a prior-filed application to which benefit is claimed, applicant may file a petition under 37 CFR 1.57(a)(3) along with the fee set forth in 37 CFR 1.17(f) **and an amendment** with the inadvertently omitted material requesting that the amendment be entered and the application be accorded a filing date as of the original date of deposit of the application papers. See 37 CFR 1.57(a)(3) and MPEP § 201.17.[1]

Here, while petitioner has submitted the omitted drawings, petitioner has not submitted an amendment seeking their entry.

Further correspondence with respect to this matter should be addressed as follows:

By mail: Mail Stop Petitions
Commissioner for Patents
P.O. Box 1450
Alexandria VA 22313-1450

---

[1] MPEP 201.06(c). Emphasis added.

By FAX: (571)273-8300
Attn: Office of Petitions

Telephone inquiries specific to this decision should be directed to Petitions Attorney Cliff Congo at (571)272-3207.

Chris Bottorff
Petitions Examiner
Office of Petitions

UNITED STATES PATENT AND TRADEMARK OFFICE

Commissioner for Patents
United States Patent and Trademark Office
P.O. Box 1450
Alexandria, VA 22313-1450
www.uspto.gov

FITCH EVEN TABIN & FLANNERY
120 SOUTH LASALLE STREET
SUITE 1600
CHICAGO IL 60603-3406

MAILED

JUN 27 2011

OFFICE OF PETITIONS

| | | |
|---|---|---|
| In re Application of | : | |
| Sandstrom, et al. | : | |
| Application No. 12/977,968 | : | DECISION ON PETITION |
| Deposited: December 23, 2010 | : | |
| Attorney Docket No. 7115-98675 | : | |

This is a decision on the renewed petition under 37 CFR 1.57(a), filed June 16, 2011, requesting that the above-identified application be accorded a filing date of December 23, 2010.

The petition under 37 CFR 1.57(a) is **GRANTED**.

The instant application was deposited on December 23, 2010. However, the application omitted drawings. Accordingly, on January 12, 2011, the Office of Initial Patent Examination mailed a "Notice of Incomplete Nonprovisional Application", requiring drawings, as well as an executed oath or declaration, which was also not submitted on filing. In response, petitioner filed a petition under 37 CFR 1.57(a) on March 10, 2011. Petitioner argued that the claims were incorporated by reference pursuant to a priority claim to provisional application No. 61/295,625. However, the petition was dismissed in a decision mailed on April 13, 2011.

With respect to the practice of incorporation by reference, the Manual of Patent Examining Procedure states:

> For applications filed on or after September 21, 2004, a claim under 35 U.S.C. 120 and 37 CFR 1.78 for benefit of a

> prior-filed nonprovisional application or international application designating the U.S. that was present on the filing date of the continuation or divisional application is considered an incorporation by reference of the prior-filed application as to inadvertently omitted material, subject to the conditions and requirements of 37 CFR 1.57(a). The purpose of 37 CFR 1.57(a) is to provide a safeguard for applicants when all or a portion of the specification and/or drawing(s) is (are) inadvertently omitted from an application.

The section goes on to state:

> For an application filed on or after September 21, 2004, if the material needed for a filing date is completely contained within a prior-filed application to which benefit is claimed, applicant may file a petition under 37 CFR 1.57(a)(3) along with the fee set forth in 37 CFR 1.17(f) and an amendment with the inadvertently omitted material requesting that the amendment be entered and the application be accorded a filing date as of the original date of deposit of the application papers. See 37 CFR 1.57(a)(3) and MPEP § 201.17.[1]

With the instant petition, petitioner has submitted drawings together with an amendment seeking their entry. Accordingly, the above-identified application is entitled to a filing date of December 23, 2010, in view of the priority claim to application No. 61/295,625, made in the specification submitted on filing.

The application is being forwarded to the Office of Patent Application Processing (OPAP) for further processing with a filing date of December 23, 2010, using the application papers received in the Office on that date and the drawings supplied on petition filed June 16, 2011.

Telephone inquiries specific to this decision should be directed to Petitions Attorney Cliff Congo at (571)272-3207.

Chris Bottorff
Petitions Examiner
Office of Petitions

---

[1] MPEP 201.06(c). Emphasis added.

PTO/SB/20PCT-EP (05-10)
Approved for use through 01/31/2012. OMB 0651-0058
U.S. Patent and Trademark Office; U. S. DEPARTMENT OF COMMERCE
Under the Paperwork Reduction Act of 1995, no persons are required to respond to a collection of information unless it displays a valid OMB control number.

# REQUEST FOR PARTICIPATION IN THE PATENT COOPERATION TREATY - PATENT PROSECUTION HIGHWAY (PCT-PPH) PILOT PROGRAM BETWEEN THE EUROPEAN PATENT OFFICE (EPO) AND THE USPTO

| | | | |
|---|---|---|---|
| Application No: | 12/977,997 | Filing date: | December 23, 2010 |
| First Named Inventor: | Lennart Balgard | | |
| Title of the Invention: | Flexible Intelligent Electronic Device | | |

**THIS REQUEST FOR PARTICIPATION IN THE PCT-PPH PILOT PROGRAM ALONG WITH THE REQUIRED DOCUMENTS MUST BE SUBMITTED VIA EFS-WEB. INFORMATION REGARDING EFS-WEB IS AVAILABLE AT HTTP://WWW.USPTO.GOV/EBC/EFS_HELP.HTML**

**APPLICANT HEREBY REQUESTS PARTICIPATION IN THE PCT-PPH PROGRAM AND PETITIONS TO MAKE THE ABOVE-IDENTIFIED APPLICATION SPECIAL UNDER THE PCT-PPH PROGRAM.**

The above-identified application is (1) a national stage entry of the corresponding PCT application, or (2) a national stage entry of another PCT application which claims priority to the corresponding PCT application, or (3) a national application that claims domestic/ foreign priority to the corresponding PCT application, or (4) a national application which forms the basis for the priority claim in the corresponding PCT application, or (5) a continuing application of a U.S. application that satisfies one of (1) to (4) above, or (6) a U.S. application that claims domestic benefit to a U.S. provisional application which forms the basis for the priority claim in the corresponding PCT application.

**The corresponding PCT application number(s) is/are:** PCT/EP2009/057980

**The international filing date of the corresponding PCT application(s) is/are:**

June 25, 2009

**I. List of Required Documents:**

a. **A copy of the latest international work product (WO/ISA, WO/IPEA, or IPER) in the above–identified corresponding PCT application(s)**

- [x] Is attached
- [ ] Is not attached because the document is already in the U.S. application.

b. **A copy of all claims which were indicated as having novelty, inventive step and industrial applicability in the above-identified corresponding PCT application(s).**

- [x] Is attached.
- [ ] Is not attached because the document is already in the U.S. application.

c. **English translations of the documents in a. and b. above are attached (if the documents are not in the English language). A statement that the English translation is accurate is attached for the document in b. above.**



This collection of information is required by 35 U.S.C. 119, 37 CFR 1.55, and 37 CFR 1.102(d). The information is required to obtain or retain a benefit by the public, which is to file (and by the USPTO to process) an application. Confidentiality is governed by 35 U.S.C. 122 and 37 CFR 1.11 and 1.14. This collection is estimated to take 2 hours to complete, including gathering, preparing, and submitting the completed application form to the USPTO. Time will vary depending upon the individual case. Any comments on the amount of time you require to complete this form and/or suggestions for reducing this burden should be sent to the Chief Information Officer, U.S. Patent and Trademark Office, U.S. Department of Commerce, P.O. Box 1450, Alexandria, VA 22313-1450. DO NOT SEND FEES OR COMPLETED FORMS TO THIS ADDRESS.

Approved for use through 01/31/2012. OMB 0651-0058
U.S.Patent and Trademark Office; U.S. DEPARTMENT OF COMMERCE

Under the Paperwork Reduction Act of 1995, no persons are required to respond to a collection of information unless it displays a valid OMB control number.

# REQUEST FOR PARTICIPATION IN THE PCT-PPH PILOT PROGRAM BETWEEN THE EPO AND THE USPTO

(continued)

| | |
|---|---|
| Application No.: | 12/977,997 |
| First Named Inventor: | Lennart Balgard |

d. **(1) An information disclosure statement listing the documents cited in the international work products (ISR, WO/ISA, WO/IPEA, IPER) of the corresponding PCT application.**

- [x] Is attached
- [ ] Has already been filed in the above-identified U.S. application on _____

**(2) Copies of all documents (except) for U.S. patents or U.S. patent application publications)**

- [x] Are attached.
- [ ] Have already been filed in the above-identified U.S. application on _____

**II. Claims Correspondence Table:**

| Claims in US Application | Patentable Claims in the corresponding PCT Application | Explanation regarding the correspondence |
|---|---|---|
| 1 | 1,2,3,4 | Corresponding claim (same) |
| 2 | 5 | Corresponding claim (single dependency) |
| 3 | 6 | Corresponding claim (single dependency) |
| 4 | 7 | Corresponding claim (single dependency) |
| 5 | 8,9,10,2,3,4 | Corresponding claim (same) |
| 6 | 11 | Corresponding claim (single dependency) |
| 7 | 12,13,14,2,3,4 | Corresponding claim (same) |
| 8 | 13 | Corresponding claim (same) |
| 9 | 14 | Corresponding claim (same) |
| 10 | 15 | Corresponding claim (single dependency) |
| | | |
| | | |
| | | |
| | | |
| | | |
| | | |
| | | |
| | | |
| | | |

**III. All the claims in the US application sufficiently correspond to the patentable claims in the corresponding PCT application.**

| | |
|---|---|
| Signature /Wesley W. Whitmyer, Jr./ | Date February 11, 2011 |
| Name (Print/Typed) Wesley W. Whitmyer, Jr. | Registration Number 33,558 |

# Privacy Act Statement

The **Privacy Act of 1974 (P.L. 93-579)** requires that you be given certain information in connection with your submission of the attached form related to a patent application or patent. Accordingly, pursuant to the requirements of the Act, please be advised that: (1) the general authority for the collection of this information is 35 U.S.C. 2(b)(2); (2) furnishing of the information solicited is voluntary; and (3) the principal purpose for which the information is used by the U.S. Patent and Trademark Office is to process and/or examine your submission related to a patent application or patent. If you do not furnish the requested information, the U.S. Patent and Trademark Office may not be able to process and/or examine your submission, which may result in termination of proceedings or abandonment of the application or expiration of the patent.

The information provided by you in this form will be subject to the following routine uses:

1. The information on this form will be treated confidentially to the extent allowed under the Freedom of Information Act (5 U.S.C. 552) and the Privacy Act (5 U.S.C 552a). Records from this system of records may be disclosed to the Department of Justice to determine whether disclosure of these records is required by the Freedom of Information Act.
2. A record from this system of records may be disclosed, as a routine use, in the course of presenting evidence to a court, magistrate, or administrative tribunal, including disclosures to opposing counsel in the course of settlement negotiations.
3. A record in this system of records may be disclosed, as a routine use, to a Member of Congress submitting a request involving an individual, to whom the record pertains, when the individual has requested assistance from the Member with respect to the subject matter of the record.
4. A record in this system of records may be disclosed, as a routine use, to a contractor of the Agency having need for the information in order to perform a contract. Recipients of information shall be required to comply with the requirements of the Privacy Act of 1974, as amended, pursuant to 5 U.S.C. 552a(m).
5. A record related to an International Application filed under the Patent Cooperation Treaty in this system of records may be disclosed, as a routine use, to the International Bureau of the World Intellectual Property Organization, pursuant to the Patent Cooperation Treaty.
6. A record in this system of records may be disclosed, as a routine use, to another federal agency for purposes of National Security review (35 U.S.C. 181) and for review pursuant to the Atomic Energy Act (42 U.S.C. 218(c)).
7. A record from this system of records may be disclosed, as a routine use, to the Administrator, General Services, or his/her designee, during an inspection of records conducted by GSA as part of that agency's responsibility to recommend improvements in records management practices and programs, under authority of 44 U.S.C. 2904 and 2906. Such disclosure shall be made in accordance with the GSA regulations governing inspection of records for this purpose, and any other relevant ( *i.e.*, GSA or Commerce) directive. Such disclosure shall not be used to make determinations about individuals.
8. A record from this system of records may be disclosed, as a routine use, to the public after either publication of the application pursuant to 35 U.S.C. 122(b) or issuance of a patent pursuant to 35 U.S.C. 151. Further, a record may be disclosed, subject to the limitations of 37 CFR 1.14, as a routine use, to the public if the record was filed in an application which became abandoned or in which the proceedings were terminated and which application is referenced by either a published application, an application open to public inspection or an issued patent.
9. A record from this system of records may be disclosed, as a routine use, to a Federal, State, or local law enforcement agency, if the USPTO becomes aware of a violation or potential violation of law or regulation.

*PATENT*
04189-P0056A WWW

**IN THE UNITED STATES PATENT AND TRADEMARK OFFICE**

| | |
|---|---|
| Applicants | Lennart Balgard, *et al.* |
| Application No. 12/977,997 | Filing Date: December 23, 2010 |
| Title of Application: | Flexible Intelligent Electronic Device |
| Confirmation No. 1394 | Art Unit: 2836 |
| | |

Mail Stop Amendment
Commissioner for Patents
Post Office Box 1450
Alexandria, VA 22313-1450

**Request To Participate In Patent Prosecution Highway (PPH)**

Filed herewith is form PTO/SB/20PCT-EP requesting participation in the PPH program and petitioning to make special U.S. Patent Application 12/977,997.

U.S. Pat. App. 12/977,997 is a continuation of, and claims priority from, PCT application PCT/EP2009/057980 filed on June 25, 2009. Applicant seeks accelerated examination under the PPH Program because corresponding claims in the PCT application have been found patentable in an International Preliminary Report on Patentability (IPRP) issued by the European Patent Office.

Filed herewith is a copy of the IPRP dated January 5, 2011, indicating that claims 1-15 were found to have novelty, inventive step and industrial applicability. Also filed herewith is a copy of claims 1-15 from PCT/EP2009/057980 publication WO 2009/156477.

The IPRP indicates certain observations in Box VIII, including objections to independent claims 1, 8 and 12 in PCT/EP2009/057980 for failing to include features "essential to perform the claimed invention." In particular, the IPRP refers to PCT/EP2009/057980 (p. 15, ll. 17-22; p. 15, l. 31 – p. 16. l. 4) in that "the particular allocation of data objects and data attributes to the communication module, resp. I/O mod-

ules represents an essential technical feature of the device." It is respectfully submitted that these features referred to in the Box VIII observations are found in claims 2, 3 and 4 of PCT/EP2009/057980, which have been incorporated into all of independent claims 1, 5 and 7 of U.S. Pat. App. 12/977,997, as shown in the attached claims correspondence table. Therefore, it is submitted that the Box VIII observations have been addressed in the U.S. claims.

The reference cited in the IPRP is submitted to the Office in an IDS filed herewith.

The claims of U.S. Pat. App. 12/977,997 have been amended to conform with U.S. claim format requirements. All claims correspond to claims found patentable in the IPRP and are believed to have similar or more limited scope, as shown in the claims correspondence table in form PTO/SB/20PCT-EP.

Applicant's request to participate in the Patent Prosecution Highway and petition to make special is believed to be in condition for granting and a favorable decision is hereby requested.

Applicant believes that no fee is due in connection with the filing of this request. However, if any fee is due, please charge Deposit Account No. 19-4516.

Respectfully submitted,

/Wesley W. Whitmyer, Jr./

February 11, 2010

Wesley W. Whitmyer, Jr., Registration No. 33,558
Stephen Ball, Registration No. 59,169
Attorney for Applicants
ST.ONGE STEWARD JOHNSTON & REENS LLC
986 Bedford Street
Stamford, CT 06905-5619
Tel. 203 324-6155

**PATENT COOPERATION TREATY**

# PCT

**INTERNATIONAL PRELIMINARY REPORT ON PATENTABILITY**
(Chapter I of the Patent Cooperation Treaty)

(PCT Rule 44*bis*)

| | | |
|---|---|---|
| Applicant's or agent's file reference<br>10446WO/HK | **FOR FURTHER ACTION** | See item 4 below |
| International application No.<br>PCT/EP2009/057980 | International filing date *(day/month/year)*<br>25 June 2009 (25.06.2009) | Priority date *(day/month/year)*<br>25 June 2008 (25.06.2008) |
| International Patent Classification (8th edition unless older edition indicated)<br>See relevant information in Form PCT/ISA/237 | | |
| Applicant<br>ABB RESEARCH LTD | | |

1. This international preliminary report on patentability (Chapter I) is issued by the International Bureau on behalf of the International Searching Authority under Rule 44 *bis*.1(a).

2. This REPORT consists of a total of 7 sheets, including this cover sheet.

   In the attached sheets, any reference to the written opinion of the International Searching Authority should be read as a reference to the international preliminary report on patentability (Chapter I) instead.

3. This report contains indications relating to the following items:

| | | |
|---|---|---|
| ☒ | Box No. I | Basis of the report |
| ☐ | Box No. II | Priority |
| ☐ | Box No. III | Non-establishment of opinion with regard to novelty, inventive step and industrial applicability |
| ☐ | Box No. IV | Lack of unity of invention |
| ☒ | Box No. V | Reasoned statement under Article 35(2) with regard to novelty, inventive step or industrial applicability; citations and explanations supporting such statement |
| ☐ | Box No. VI | Certain documents cited |
| ☒ | Box No. VII | Certain defects in the international application |
| ☒ | Box No. VIII | Certain observations on the international application |

4. The International Bureau will communicate this report to designated Offices in accordance with Rules 44*bis*.3(c) and 93*bis*.1 but not, except where the applicant makes an express request under Article 23(2), before the expiration of 30 months from the priority date (Rule 44*bis* .2).

| | |
|---|---|
| | Date of issuance of this report<br>05 January 2011 (05.01.2011) |
| The International Bureau of WIPO<br>34, chemin des Colombettes<br>1211 Geneva 20, Switzerland<br>Facsimile No. +41 22 338 82 70 | Authorized officer<br>Agnes Wittmann-Regis<br>e-mail: pt06.pct@wipo.int |

# PATENT COOPERATION TREATY

From the
INTERNATIONAL SEARCHING AUTHORITY

To:

see form PCT/ISA/220

# PCT

## WRITTEN OPINION OF THE INTERNATIONAL SEARCHING AUTHORITY

(PCT Rule 43*bis*.1)

Date of mailing
*(day/month/year)* see form PCT/ISA/210 (second sheet)

Applicant's or agent's file reference
see form PCT/ISA/220

**FOR FURTHER ACTION**
See paragraph 2 below

| International application No. | International filing date *(day/month/year)* | Priority date *(day/month/year)* |
|---|---|---|
| PCT/EP2009/057980 | 25.06.2009 | 25.06.2008 |

International Patent Classification (IPC) or both national classification and IPC
INV. G05B19/042

Applicant
ABB RESEARCH LTD

1. This opinion contains indications relating to the following items:

- ☒ Box No. I Basis of the opinion
- ☐ Box No. II Priority
- ☐ Box No. III Non-establishment of opinion with regard to novelty, inventive step and industrial applicability
- ☐ Box No. IV Lack of unity of invention
- ☒ Box No. V Reasoned statement under Rule 43*bis*.1(a)(i) with regard to novelty, inventive step or industrial applicability; citations and explanations supporting such statement
- ☐ Box No. VI Certain documents cited
- ☒ Box No. VII Certain defects in the international application
- ☒ Box No. VIII Certain observations on the international application

2. **FURTHER ACTION**

If a demand for international preliminary examination is made, this opinion will usually be considered to be a written opinion of the International Preliminary Examining Authority ("IPEA") except that this does not apply where the applicant chooses an Authority other than this one to be the IPEA and the chosen IPEA has notifed the International Bureau under Rule 66.1*bis*(b) that written opinions of this International Searching Authority will not be so considered.

If this opinion is, as provided above, considered to be a written opinion of the IPEA, the applicant is invited to submit to the IPEA a written reply together, where appropriate, with amendments, before the expiration of 3 months from the date of mailing of Form PCT/ISA/220 or before the expiration of 22 months from the priority date, whichever expires later.

For further options, see Form PCT/ISA/220.

3. For further details, see notes to Form PCT/ISA/220.

| Name and mailing address of the ISA: | Date of completion of this opinion | Authorized Officer |
|---|---|---|
| European Patent Office<br>P.B. 5818 Patentlaan 2<br>NL-2280 HV Rijswijk - Pays Bas<br>Tel. +31 70 340 - 2040<br>Fax: +31 70 340 - 3016 | see form PCT/ISA/210 | Cîrîc, George<br>Telephone No. +31 70 340-1958 |

**WRITTEN OPINION OF THE INTERNATIONAL SEARCHING AUTHORITY**

International application No.
PCT/EP2009/057980

**Box No. I Basis of the opinion**

1. With regard to the **language**, this opinion has been established on the basis of:

   ☒ the international application in the language in which it was filed

   ☐ a translation of the international application into , which is the language of a translation furnished for the purposes of international search (Rules 12.3(a) and 23.1 (b)).

2. ☐ This opinion has been established taking into account the **rectification of an obvious mistake** authorized by or notified to this Authority under Rule 91 (Rule 43bis.1(a))

3. With regard to any **nucleotide and/or amino acid sequence** disclosed in the international application and necessary to the claimed invention, this opinion has been established on the basis of:

   a. type of material:

   ☐ a sequence listing

   ☐ table(s) related to the sequence listing

   b. format of material:

   ☐ on paper

   ☐ in electronic form

   c. time of filing/furnishing:

   ☐ contained in the international application as filed.

   ☐ filed together with the international application in electronic form.

   ☐ furnished subsequently to this Authority for the purposes of search.

4. ☐ In addition, in the case that more than one version or copy of a sequence listing and/or table relating thereto has been filed or furnished, the required statements that the information in the subsequent or additional copies is identical to that in the application as filed or does not go beyond the application as filed, as appropriate, were furnished.

5. Additional comments:

**Box No. V Reasoned statement under Rule 43*bis*.1(a)(i) with regard to novelty, inventive step or industrial applicability; citations and explanations supporting such statement**

1. Statement

| | | | |
|---|---|---|---|
| Novelty (N) | Yes: | Claims | 1-15 |
| | No: | Claims | |
| Inventive step (IS) | Yes: | Claims | 1-15 |
| | No: | Claims | |
| Industrial applicability (IA) | Yes: | Claims | 1-15 |
| | No: | Claims | |

2. Citations and explanations

**see separate sheet**

**Box No. VII Certain defects in the international application**

The following defects in the form or contents of the international application have been noted:

**see separate sheet**

**Box No. VIII Certain observations on the international application**

The following observations on the clarity of the claims, description, and drawings or on the question whether the claims are fully supported by the description, are made:

**see separate sheet**

**Re Item V**

1 Reference is made to the following document:

D1: DE 103 07 332 A1 (SIEMENS AG [DE]) 2 September 2004 (2004-09-02)

2 Although claims 1 - 15 meet the requirements of novelty and inventive step enshrined in Article 33 (2) and (3) PCT with respect to the available prior art, amendment is required to overcome the objections set forth in sections VII and VIII.

Independent claim 1 relates to an intelligent electronic device for provision in Substation Automation or Distribution Automation systems. Although it is known from the prior art (see document D1, par. [0024] to [0038]) to provide an intelligent electronic device having a structuring of its own functionality according to a communication standard, and where mechanically separable, replaceable hardware modules implement various functionalities, the following features of the intelligent electronic device defined in claim 1 are neither disclosed nor seem to be rendered obvious by any of the available documents of the prior art:

- the intelligent electronic device includes elements of the communication standard comprising one device related element and replaceable function related elements of all the functions provided by said modules, and where the communication module includes a control unit providing the device related element of the communication standard, function elements associated with the function of the communication module and at least one function element associated with functions provided by all the I/O modules.

The technical effect of these features is to provide a modular intelligent electronic device (IED) that is flexible and which can be changed both regarding its hardware and its software. This IED can be combined with a data communication standard, and allows a free combination of both software elements and hardware modules while at the same time provides communication according to the communication standard.

In this way it is possible to take account of such problems as provision of extra I/O connections for optional external data related elements of some function related elements, providing a device that may have a varying I/O connections depending on the environment in which it is provided and that is adaptable to various communication changes to higher level devices.

There is no hint included in document D1 pointing the person skilled in the art to the structure described in claim 1 and to the aforesaid advantages.

Other prior art documents provide no further relevant disclosure with regard to claim 1 of the invention for motivating a person skilled in the art to a combination with the teaching of D1 in order to arrive at the subject-matter of claim 1.

Therefore, taking also into account the objections raised in Section VIII, the subject-matter defined in independent apparatus claim 1 as well as in corresponding claims 8 and 12 is novel and involves an inventive step.

3 The industrial applicability of the current application is clearly given from the defined subject-matter (Article 33(4) PCT).

**Re Item VII**

1 Independent claims 1 and 8 are not in the two-part form in accordance with Rule 6.3(b) PCT, which in the present case would be appropriate.

2 Contrary to the requirements of Rule 5.1(a)(ii) PCT, the document D1 is not identified in the description and the relevant background art disclosed therein is not at least briefly discussed.

**Re Item VIII**

1 The application describes on pages 15 - 16 the structure of the intelligent electronic device (IED) as defined in claim 1 in relation with a series of elements hierarchically linked to each other. Since these elements relate to the interrelations between the logical device, logical nodes, data objects and data attributes used by the communication standard IEC 61850 for modeling an electronic device used in a substation automation system, it is readily apparent from the corresponding passages providing this disclosure (*see page 15, lines 17 - 22 and page 15, line 31 - page 16, line 4*) that the particular allocation of data objects and data attributes to the communication module, resp. I/O modules represents an essential technical feature of the device defined in claim 1, in order to achieve the desired functionality of the IED by implementing mechanically separable, replaceable hardware modules.

However, these features, essential to perform the claimed invention, are not present in the wording of current claim 1.

Similar objection is raised for the corresponding claims 8 and 12.

CLAIMS

1. An intelligent electronic device (14) for provision in Substation Automation or Distribution Automation systems (10) and having a structuring of its own functionality according to a communication standard, which standard provides a series of elements (LD, LN1, LN2, LN3, LN4, LN5, LN6, DO1, D02, DO3, DO4, DO5, DO6, DA1, DA2, DA3, DA4, DA5, DA6) hierarchically linked to each other and including a device related element (LD), a number of function elements (LN1, LN2, LN3, LN4, LN5, LN6) linked to the device related element (LN) and a number of data provision elements (D01, DO2, DO3, DO4, DO5, DO6, DA1, DA2, DA3, DA4, DA5, DA6) linked to the function elements, said device comprising:

- mechanically separable, replaceable hardware modules (26, 28, 30, 32, 34, 36, 38) interconnected via an inter-module bus (40), said modules implementing functionality related to the function related elements (LN1, LN2, LN3, LN4, LN5, LN6) of the standard and including a communication module (28) for communicating with other devices (16, 18, 20) of the system (10) via a computer communication network (12) and at least one I/O module (32, 34, 36, 38) for direct communication with local system equipment (22, 24),

where said intelligent electronic device (14) includes elements of the communication standard comprising one device related element (LD) and replaceable function related elements (LN1, LN2, LN3, LN4, LN5, LN6) of all the functions provided by said modules, and

where said communication module (28) includes a control unit (42) providing the device related element (LN) of the communication standard, function elements (LN1) associated with the function of the communication module and at least one function element (LN3, LN4, LN5, LN6) associated with functions provided by all the I/O modules (32, 34, 36, 38).

2. A device (14) according to claim 1, wherein all I/O modules (32, 34, 36, 38) providing data related functions include data provision elements (DA3, DA4, DA5, DA6) according to the standard and being associated with a corresponding function element (LN3, LN4, LN5, LN6) in the communication module (28).

3. A device (14) according to claim 2, wherein the I/O modules provide the data related elements at the lowest hierarchical level of the linked elements providing attributes of data defined by a corresponding higher level data provision element (DO3, DO4, DO5, DO6), where said higher level data provision element and corresponding function related element (LN3, LN4, LN5, LN6) are provided by the communication module (28).

4. A device (14) according to claim 2 or 3, wherein the control unit (42) of the communication module (28) is arranged to associate, at powering up of the device, the data provision elements (DA3, DA4, DA5, DA6) of the I/O modules (32, 34, 36, 38) with corresponding elements (LN3, LN4, LN5, LN6) associated with the function of the I/O modules in the communication module (28).

5. A device (14) according to any previous claim further comprising a process control module (30) for handling at least one protection and/or control function of the device.

6. A device (14) according to any previous claim,further comprising a power supply module (26) providing power to the other modules of the device.

7. A device (14) according to any previous claim, wherein the communication standard is IEC 61850.

8. A method for enabling selection of functions and hardware modules to be included in an intelligent electronic device (14) to be provided in a Substation Automation or Distribution Automation system (10) and comprising the steps of:

- receiving (48) a user selection of functions to be included in the intelligent electronic device (14),
- receiving (50) a user selection of data connections between the intelligent electronic device and local system equipment (22, 24), and
- selecting (52) mechanically separable, replaceable hardware modules (26, 28, 30, 32, 34, 36, 38) to be included in the intelligent electronic device based on the received user selections,

where the selected modules include a communication module (28) for communicating with other devices (16, 18, 20) of the system via a computer communication network (12) and at least one I/O module (32, 34, 36, 38) for direct communication with local system equipment (22, 24),

where said communication module (28) is provided for implementing functionality related to a communication standard, which standard provides a series of elements (LD, LN1, LN2, LN3, LN4, LN5, LN6, DO1, D02, DO3, DO4, DO5, DO6, DA1, DA2, DA3, DA4, DA5, DA6) hierarchically linked to each other and including a device related element (LD), a number of function elements (LN1, LN2, LN3, LN4, LN5, LN6) linked to the device related element (LD) and a number of data provision elements (D01, DO2, DO3, DO4, DO5, DO6, DA1, DA2, DA3, DA4, DA5, DA6), and

where the selected communication module (28) is configured to enable inclusion of the device related element (LD) of the communication standard, function elements (LN1) associated with the function of the communication module (28) and at least one function element (LN3, LN4, LN5, LN6) associated with functions provided by all the I/O modules (32, 34, 36, 38) selected for the device.

9. A method according to claim 8, wherein all selected I/O modules (32, 34, 36, 38) include data provision elements (DA3, DA4, DA5, DA6) according to the standard.

10. A method according to claim 9, wherein the I/O modules provide the data related elements (DA3, DA4, DA5, DA6) at the lowest hierarchical level of the linked elements providing attributes of data defined by a corresponding higher level data provision element (DO3, DO4, DO5, DO6).

11. A method according to any of claims 8 - 10, further comprising the step of generating a device capability description file including elements of the communication standard that outline the functions, data and attributes of data corresponding to the selected hardware modules and user selected functions and data connections.

12. A computer program product provided on a data carrier for enabling selection of functions and hardware modules to be included in an intelligent electronic device (14) to be provided in a Substation Automation or Distribution Automation system (10), and comprising computer program code to make a computer perform, when said code is loaded into said computer

- receiving a user selection of functions to be included in the intelligent electronic device (14),
- receiving a user selection of data connections between the intelligent electronic device and local system equipment (22, 24), and
- selecting mechanically separable, replaceable hardware modules (26, 28, 30, 32, 34, 36, 38) to be included in the intelligent electronic device based on the received user selections,

where the selected modules include a communication module (28) for communicating with other devices (16, 18, 20) of the system via a computer communication network (12) and at least one I/O module (32, 34, 36, 38) for direct communication with local system equipment (22, 24),

where said communication module (28) is provided for implementing functionality related to a communication standard, which standard provides a series of elements

(LD, LN1, LN2, LN3, LN4, LN5, LN6, DO1, D02, DO3, DO4, DO5, DO6, DA1, DA2, DA3, DA4, DA5, DA6) hierarchically linked to each other and including a device related element (LD), a number of function elements (LN1, LN2, LN3, LN4, LN5, LN6) linked to the device related element (LD) and a number of data provision elements (D01, DO2, DO3, DO4, DO5, DO6, DA1, DA2, DA3, DA4, DA5, DA6), and
where the selected communication module (28) is configured to enable inclusion of the device related element (LD) of the communication standard, function elements (LN1) associated with the function of the communication module (28) and at least one function element (LN3, LN4, LN5, LN6) associated with functions provided by all the I/O modules (32, 34, 36, 38) selected for the device.

13. A computer program product according to claim 12, wherein all selected I/O modules (32, 34, 36, 38) include data provision elements (DA3, DA4, DA5, DA6) according to the standard.

14. A computer program product according to claim 13, wherein the I/O modules provide the data related elements (DA3, DA4, DA5, DA6) at the lowest hierarchical level of the linked elements providing attributes of data defined by a corresponding higher level data provision element (DO3, DO4, DO5, DO6).

15. A computer program product according to any of claims 12 - 14, further comprising code for generating a device capability description file including elements of the communication standard that outline the

functions, data and attributes of data corresponding to the selected hardware modules and user selected functions and data connections.

UNITED STATES PATENT AND TRADEMARK OFFICE

UNITED STATES DEPARTMENT OF COMMERCE
United States Patent and Trademark Office
Address: COMMISSIONER FOR PATENTS
P.O. Box 1450
Alexandria, Virginia 22313-1450
www.uspto.gov

| APPLICATION NO. | FILING DATE | FIRST NAMED INVENTOR | ATTORNEY DOCKET NO. | CONFIRMATION NO. |
|---|---|---|---|---|
| 12/977,997 | 12/23/2010 | Lennart Balgard | 04189-P0056A | 1394 |

24126 7590 03/22/2011
ST. ONGE STEWARD JOHNSTON & REENS, LLC
986 BEDFORD STREET
STAMFORD, CT 06905-5619

| EXAMINER |
|---|

| ART UNIT | PAPER NUMBER |
|---|---|
| 2836 | |

| MAIL DATE | DELIVERY MODE |
|---|---|
| 03/22/2011 | PAPER |

**Please find below and/or attached an Office communication concerning this application or proceeding.**

The time period for reply, if any, is set in the attached communication.

UNITED STATES PATENT AND TRADEMARK OFFICE

Commissioner for Patents
United States Patent and Trademark Office
P.O. Box 1450
Alexandria, VA 22313-1450
www.uspto.gov

**ST. ONGE STEWARD JOHNSTON & REENS, LLC**
**986 BEDFORD STREET**
**STAMFORD CT 06905-5619**

| | |
|---|---|
| **In re Application of** | |
| **BALGARD et al.** | **: DECISION ON REQUEST TO** |
| **Application No.: 12/977,997** | **: PARTICIPATE IN THE PATENT** |
| **Filed: 23 December 2010** | **: PROSECUTION HIGHWAY** |
| **Attorney Docket No.: 04189-P0056A** | **: PROGRAM AND PETITION** |
| **For: FLEXIBLE INTELLIGENT** | **: TO MAKE SPECIAL UNDER** |
| **ELECTRONIC DEVICE** | **: 37 CFR 1.102(a)** |

This is a decision on the request to participate in the PCT Patent Prosecution Highway (PCT-PPH) pilot program and the petition under 37 CFR 1.102(a), filed 11 February 2011, to make the above-identified application special.

The request and petition are **GRANTED**.

**Discussion**

A grantable request to participate in the PCT-PPH pilot program and petition to make special require:

(1) The U.S. application must disclose an eligible relationship to one or more PCT applications where the ISA or IPEA are the JPO, EPO, KIPO, IPAU, or USPTO;

(2) At least one claim in the PCT application has novelty, inventive step, and industrial applicability and must be free of any observations in Box VIII in the latest work product in the international stage or applicant must identify and explain why the claim(s) is/are not subject to the observation in Box VIII;

(3) Applicant must submit a copy of the claim(s) from the PCT application(s) that have novelty, inventive step, and industrial applicability along with an English translation thereof and a statement that the English translation is accurate, if the claims are not in the English language;

(4) All the claims in the U.S. application must sufficiently correspond or be amended to sufficiently correspond to the claim(s) that have novelty, inventive step, and industrial applicability in the PCT application(s);

(5) Examination of the U.S. application has not begun;

(6) Applicant must submit a copy of the latest international work product from the PCT application indicating that the claim(s) have novelty, inventive step, and industrial applicability along with an English translation thereof and a statement that the English translation is accurate

if the latest international work product is not in the English language;

(7) Applicant must submit an IDS listing the documents cited by the PCT examiner in the international work product along with copies of documents except U.S. patents or U.S. patent application publications.

The request to participate in the PCT-PPH pilot program and petition comply with the above requirements. Accordingly, the above-identified application has been accorded "special" status.

Telephone inquiries concerning this decision should be directed to Lee W. Young at 571-272-4549.

All other inquiries concerning the examination or status of the application is accessible in the PAIR system at http://www.uspto.gov/ebc.index.html.

This application will be forwarded to the examiner for action on the merits commensurate with this decision once this application's formality reviews have been completed.

Lee W. Young
TQAS Technology Center 2800 - Semiconductors,
Electrical & Optical Systems & Components

UNITED STATES PATENT AND TRADEMARK OFFICE

Commissioner for Patents
United States Patent and Trademark Office
P.O. Box 1450
Alexandria, VA 22313-1450
www.uspto.gov

**Waters & Associates**
**161 Ottawa Ave., N.W.**
**305B WATERS BUILDING**
**Grand Rapids MI 49503**

MAILED
NOV 30 2011
OFFICE OF PETITIONS

In re Application of
Travis M. Randolph
Application No. 12/978,000
Filed: December 23, 2010
Attorney Docket No. 7216.P026US2

DECISION ON PETITION
TO MAKE SPECIAL UNDER
37 CFR 1.102(c)(1)

This is a decision on the petition under 37 CFR 1.102(c)(1), filed November 9, 2011, to make the above-identified application special based on applicant's age as set forth in M.P.E.P. § 708.02, Section IV.

The petition is **GRANTED**.

A grantable petition to make an application special under 37 CFR 1.102(c)(1) and MPEP § 708.02, Section IV: Applicant's Age must be accompanied by evidence showing that at least one of the applicants is 65 years of age, or more, such as a birth certificate or a statement by applicant. No fee is required

The instant petition includes a statement by an attorney on behalf of inventor Travis M. Randolph, attesting to his/her age. The above-identified application has been accorded "special" status.

Telephone inquiries concerning this decision should be directed to Kimberly Inabinet at 571-272-4618.

The application is being forwarded to Technology Center 3637 for action on the merits commensurate with this decision.

/Kimberly Inabinet/

Kimberly Inabinet
Petitions Examiner
Office of Petitions

UNITED STATES PATENT AND TRADEMARK OFFICE

Commissioner for Patents
United States Patent and Trademark Office
P.O. Box 1450

MAILED
AUG 30 2011
OFFICE OF PETITIONS

**TIMOTHY M. BARLOW**
**3595 Fountain Blvd**
**Suite A2**
**Colorado Springs CO 80910**

In re Application of :
Max WINKLER et al. : ON PETITION
Application No. 12/978,040 :
Filed: December 23, 2010 :
Atty. Docket No.: 4706P151USCON

This is in response to the petition under 37 CFR 1.47(a), filed June 9, 2011.

The petition is **DISMISSED**.

Rule 47 applicant is given TWO (2) MONTHS from the mailing date of this decision to reply, correcting the below-noted deficiencies. Any reply should be entitled "Request for Reconsideration of Petition Under 37 CFR 1.47(a)," and should only address the deficiencies noted below, except that the reply may include an oath or declaration executed by the non-signing inventor. **FAILURE TO RESPOND WILL RESULT IN ABANDONMENT OF THE APPLICATION.** Any extensions of time will be governed by 37 CFR 1.136(a).

A grantable petition under 37 CFR 1.47(a) requires:

(1) proof that the non-signing inventor cannot be reached or refuses to sign the oath or declaration after having been presented with the application papers (specification, claims, and drawings);
(2) an acceptable oath or declaration in compliance with 35 U.S.C. §§115 and 116;
(3) the petition fee; and
(4) a statement of the last known address of the non-signing inventor.

The instant petition lacks item (1).

Regarding item (1), rule 47 applicant must demonstrate with documented evidence that an inventor refuses to join in the application after having been presented with the application papers (specification, claims, drawings, and oath or declaration). Statements of facts must be signed by a person having firsthand knowledge of the facts recited therein and should be accompanied by documentary evidence in support of the statements

of facts. It is important that the forthcoming communication contain statements of facts as opposed to conclusion.

The instant petition fails to include evidence that the application papers were sent to non-signing inventor Heiko Suess. Further, a statement of facts from Mr. Manfred Preiss, to whom non-signing inventor Mr. Suess told he refused to sign the declaration, has not been provided.

Further correspondence with respect to this matter should be addressed as follows:

By Mail: Mail Stop PETITION
Commissioner for Patents
P.O. Box 1450
Alexandria, VA 22313-1450

By hand: U.S. Patent and Trademark Office
Customer Service Window, Mail Stop Petitions
Randolph Building
401 Dulany Street
Alexandria, VA 22314

The centralized facsimile number is **(571) 273-8300.**

Telephone inquiries regarding this decision should be directed to Robert DeWitty, Petitions Attorney, Office of Petitions at (571) 272-8427.

Ramesh Krishnamurthy

for Anthony Knight
Director
Office of Petitions

UNITED STATES PATENT AND TRADEMARK OFFICE

Commissioner for Patents
United States Patent and Trademark Office
P.O. Box 1450

MAILED
OCT 17 2011
OFFICE OF PETITIONS

**TIMOTHY M. BARLOW**
**3595 Fountain Blvd**
**Suite A2**
**Colorado Springs CO 80910**

| | | |
|---|---|---|
| In re Application of | : | |
| Max WINKLER et al. | : | ON PETITION |
| Application No. 12/978,040 | : | |
| Filed: December 23, 2010 | : | |
| Atty. Docket No.: 4706P151USCON | | |

This is in response to the renewed petition under 37 CFR 1.47(a), filed September 26, 2011.

The petition is **DISMISSED**.

Rule 47 applicant is given TWO (2) MONTHS from the mailing date of this decision to reply, correcting the below-noted deficiencies. Any reply should be entitled "Request for Reconsideration of Petition Under 37 CFR 1.47(a)," and should only address the deficiencies noted below, except that the reply may include an oath or declaration executed by the non-signing inventor. **FAILURE TO RESPOND WILL RESULT IN ABANDONMENT OF THE APPLICATION**. Any extensions of time will be governed by 37 CFR 1.136(a).

A grantable petition under 37 CFR 1.47(a) requires:

(1) proof that the non-signing inventor cannot be reached or refuses to sign the oath or declaration after having been presented with the application papers (specification, claims, and drawings);
(2) an acceptable oath or declaration in compliance with 35 U.S.C. §§115 and 116;
(3) the petition fee; and
(4) a statement of the last known address of the non-signing inventor.

The instant petition lacks item (1).

Item (1) requires a "diligent effort" has been expended in attempting to find or reach the non-signing inventor (35 U.S.C. § 116) (*see also*, MPEP 409.03(a)). The showing currently fails to demonstrate, with a documented showing, that a diligent effort was made to find or locate non-signing inventor Heiko Suess. Specifically, petitioner has not

shown that the non-signing inventor refused to sign after complete application papers (including specification, claims, and drawings) were sent to the non-signing inventor, along with a cover letter of instructions which includes a deadline. Whereas petitioner asserts that a letter was sent to Mr. Suess, evidence of that letter has not been included with the instant petition.

As the instant petition is a renewed petition for the previous petition filed June 9, 2011, the payment of $200 on September 26, 2011 is not needed, and will be refunded.

Further correspondence with respect to this matter should be addressed as follows:

By Mail: Mail Stop PETITION
Commissioner for Patents
P.O. Box 1450
Alexandria, VA 22313-1450

By hand: U.S. Patent and Trademark Office
Customer Service Window, Mail Stop Petitions
Randolph Building
401 Dulany Street
Alexandria, VA 22314

The centralized facsimile number is **(571) 273-8300.**

Telephone inquiries regarding this decision should be directed to Robert DeWitty, Petitions Attorney, Office of Petitions at (571) 272-8427.

Ramesh Krishnamurthy
for Anthony Knight
Director
Office of Petitions

UNITED STATES PATENT AND TRADEMARK OFFICE

UNITED STATES DEPARTMENT OF COMMERCE
United States Patent and Trademark Office
Address: COMMISSIONER FOR PATENTS
P.O. Box 1450
Alexandria, Virginia 22313-1450
www.uspto.gov

| APPLICATION NO. | FILING DATE | FIRST NAMED INVENTOR | ATTORNEY DOCKET NO. | CONFIRMATION NO. |
|---|---|---|---|---|
| 12/978,061 | 12/23/2010 | Kirsten R. Benjamin | 11836-055-999 | 1529 |

20583 7590 01/13/2011
JONES DAY
222 EAST 41ST ST
NEW YORK, NY 10017

| EXAMINER |
|---|

| ART UNIT | PAPER NUMBER |
|---|---|
| 1634 | |

| MAIL DATE | DELIVERY MODE |
|---|---|
| 01/13/2011 | PAPER |

**Please find below and/or attached an Office communication concerning this application or proceeding.**

The time period for reply, if any, is set in the attached communication.

UNITED STATES PATENT AND TRADEMARK OFFICE

Commissioner for Patents
United States Patent and Trademark Office
P.O. Box 1450
Alexandria, VA 22313-1450
www.uspto.gov

JAN 1 3 2011

JONES DAY
222 EAST 41ST ST
NEW YORK NY 10017

In re Application of:
Kirsten Benjamin

Serial No.: 12/978,061

Filed: December 23, 2010

Docket No.: **11836-055-999**

Title: **NUCLEIC ACIDS, COMPOSITIONS AND METHODS FOR THE EXCISION OF TARGET NUCLEIC ACIDS**

DECISION ON REQUEST FOR CONSIDERATION TO MAKE SPECIAL FOR NEW APPLICATION UNDER 37 C.F.R. § 1.102 & M.P.E.P. § 708.02

This is a decision on the request for reconsideration filed on December 23, 2010 to make the above-identified application special for accelerated examination procedure under 37 C.F.R. § 1.102(d).

The petition to make the application special is GRANTED.

The application is eligible for accelerated examination and the petition complies with the conditions for granting the application special status pursuant to the "Change to Practice for Petitions in Patent Applications to Make Special and for Accelerated Examination" published June 26, 2006, in the Federal Register. (71 Fed. Reg. 36323).

The prosecution of the instant application will be conducted expeditiously according to the following guidelines.

1. The application will be docketed to an examiner and taken up for action within two weeks of the date of this decision.

2. Restriction Practice:
   If the examiner determines that the claims are not directed to a single invention, a telephone request to elect one single invention will be made pursuant to MPEP 812.01. As a prerequisite to the grant of this petition, the applicant has agreed to make an oral election, by telephone, without traverse. If the applicant refuses to make an election without traverse, or the examiner cannot reach the applicant after a reasonable effort, the

examiner will treat the first claimed invention (invention defined by claim 1) as having being constructively elected without traverse for examination.

3. Office action:
   If it is determined that, after appropriate consultation, there is a potential rejection or any other issue to be addressed, the examiner will telephone the applicant and arrange an interview to discuss and resolve the issue. An Office action, other than a Notice of Allowance and Fee(s) Due (Notice of Allowance), will not be issued unless either: 1) an interview was conducted but did not result in agreed to action that places the application in condition for allowance, or, 2) a determination is made that an interview would be unlikely to result in the application being placed in condition for allowance, and 3) an internal conference has been held to review any rejection of any claim.

4. Time for Reply:
   An Office action other than a Notice of Allowance or a final Office action will set a shortened statutory period of one month or thirty days, whichever is longer, for reply with no extension of time available under 37 CFR 1.136(a). Failure to timely file a reply within this non-extendible period for reply will result in the abandonment of the application.

5. Reply by Applicant:
   A timely reply to an Office action other than the Notice of Allowance must be submitted electronically via EFS or EFS-web and limited to addressing the rejections, objections and requirement made. Any amendment that attempts to: 1) add claims which would result in more than three pending independent claims or more than twenty pending total claims; 2) present claims not encompassed by the pre-examination search or an updated accelerated examination support document; or 3) present claims that are directed a non-elected invention or an invention other than that previously claimed and examined in the application, will be treated as not fully responsive and will not be entered.

   For any amendment to the claims (including any new claim) that is not encompassed by the accelerated examination support document, applicant must provide an updated accelerated examination support document that encompasses the amended or new claims at the time of filing of the amendment.

   To proceed expeditiously with the examination, it is recommended that a reply with amendments made to any claim or with any new claim being added be accompanied by an updated accelerated examination support document or a statement explaining how the amended or new claim is supported by the original accelerated examination support document.

6. Information Disclosure Statement (IDS):
7. Any IDS filed during prosecution must be submitted electronically via EFS or EFS-web, accompanied by an updated accelerated examination support document, and be in compliance with 37 CFR 1.97 and 1.98.

8. Post-Allowance Processing:
   To expedite processing of the allowed application into a patent, the applicant must: 1) pay the required fees within one month of the date of the Notice of Allowance, and 2) not file any post allowance papers not required by the Office. In no event may the issue fee be paid and accepted later than three months from the date of the Notice of Allowance.

9. After-Final and Appeal Procedures:
   To expedite prosecution, after receiving the final Office action, applicant must: 1) promptly file a notice of appeal, an appeal brief and appeal fees; and 2) not request a pre-appeal brief conference.

   Any amendment, affidavit or other evidence filed after final Office action must comply with applicable rules and the requirements outlined in numbered paragraphs 5 and 6 above.

   On appeal, the application will proceed according to normal appeal procedures. After appeal, the application will again be treated special.

10. Proceedings Outside the Normal Examination Process:
    If the application becomes involved in a proceeding that is outside the normal examination process (e.g., a secrecy order, national security review, interference proceeding, petitions under 37 CFR 1.181, 182 or 183), the application will be treated special before and after such proceeding.

11. Final Disposition:
    The twelve month goal of this accelerated examination procedure ends with a final disposition. The mailing of a final Office action, a Notice of Allowance, the filing of a Notice of Appeal, or the filing of a Request for Continued Examination (RCE) is the final disposition.

If, during prosecution, a paper is not filed electronically using EFS-web, a reply is filed but is not fully responsive, the application is involved in an appeal, or a proceeding outside normal examination process, the application will still be examined expeditiously, however, the final disposition may occur more than twelve months from the filing of the application.

Any inquiry regarding this decision should be directed to Marianne C. Seidel, Quality Assurance Specialist, at (571) 272-0584.

/MC Seidel/
Marianne C. Seidel, Quality Assurance Specialist
Technology Center 1600

UNITED STATES PATENT AND TRADEMARK OFFICE

UNITED STATES DEPARTMENT OF COMMERCE
United States Patent and Trademark Office
Address: COMMISSIONER FOR PATENTS
P.O. Box 1450
Alexandria, Virginia 22313-1450
www.uspto.gov

| APPLICATION NO. | FILING DATE | FIRST NAMED INVENTOR | ATTORNEY DOCKET NO. | CONFIRMATION NO. |
|---|---|---|---|---|
| 12/978,132 | 12/23/2010 | Atsushi ITO | KP-12079 | 1659 |

7590 01/23/2012
MCGINN INTELLECTUAL PROPERTY LAW GROUP, PLLC
8321 OLD COURTHOUSE ROAD
SUITE 200
VIENNA, VA 22182-3817

| EXAMINER |
|---|
| BACKER, FIRMIN |

| ART UNIT | PAPER NUMBER |
|---|---|
| 2448 | |

| MAIL DATE | DELIVERY MODE |
|---|---|
| 01/23/2012 | PAPER |

## DECISION GRANTING PETITION UNDER 37 CFR 1.138(d)

*The declaration of express abandonment is recognized*

This is in response to the petition under 37 CFR 1.138(d), requesting for a refund of any previously paid search fee and excess claims fee in the above-identified application.

The petition is granted.

The express abandonment is recognized. Any previously paid search fee and excess claims fee are hereby refunded.

Telephone inquiries should be directed to the Office of Data Management at (571) 272-4200.

Nioni Farmer

Patent Publication Branch
Office of Data Management



FORM PET651G (Rev. 08/07)

Attorney Docket No. BL080016US-CIP1

**IN THE UNITED STATES PATENT AND TRADEMARK OFFICE**

Applicant: Tao Xu

Title: Surface-Textured Encapsulations For Use With Light Emitting Diodes

---

**CERTIFICATE OF ELECTRONIC FILING SYTEM TRANSMISSION**

Pursuant to 37 CFR 1.8(a)(1)(ii)

I hereby certify that this paper is being submitted via the United States Patent Office Electronic Filing System, EFS-Web, pursuant to 37 CFR 1.6(a)(4) on

**December 23, 2010**

Typed of printed name of person signing this certificate, Daniel Tagliaferri

Signature

---

Via EFS-Web
Commissioner for Patents
P.O. Box 1450
Alexandria, VA 22313-1450

## PETITION TO MAKE SPECIAL UNDER THE GREEN TECHNOLOGY PILOT PROGRAM

Applicant(s) hereby submit a petition to make special under the Green Technology Pilot Program for the above-identified patent application.

Aspects of the invention disclosed by the application pertain to Energy Conservation under Category III of Eligibility Requirements under the Green Technology Pilot Program ("GTTP"). An early publication in compliance with 37 CFR 1.219 is herein requested, and the publication fee set forth in 37 CFR 1.18(d) is accompanied herewith.

Applicant(s) thanks the Examiner for carefully examining the present application and if a telephone conference would facilitate the prosecution of this application, the Examiner is invited to contact Daniel Tagliaferri at (510) 521-6980.

Respectfully Submitted,

Dated: December 23, 2010

Daniel D. Tagliaferri, *Reg. No. 43,178*
Law Office of Daniel D. Tagliaferri
1631 Alameda Ave
Alameda, CA 94501
(510) 521-6980

**Doc Code: PET.GREEN**
**Document Description: Petition for Green Tech Pilot**

PTO/SB/420 (11-10)
Approved for use through 01/31/2011. OMB 0651-0062
U.S. Patent and Trademark Office; U. S. DEPARTMENT OF COMMERCE
Under the Paperwork Reduction Act of 1995, no persons are required to respond to a collection of information unless it displays a valid OMB control number.

# PETITION TO MAKE SPECIAL UNDER THE GREEN TECHNOLOGY PILOT PROGRAM

| Attorney Docket Number: BL080016US-CIP1 | Application Number (if known): | Filing date: |
|---|---|---|
| First Named Inventor: Tao Xu | | |
| Title: Surface-Textured Encapsulations For Use With Light Emitting Diodes | | |

**APPLICANT HEREBY REQUESTS TO PARTICIPATE IN THE GREEN TECHNOLOGY PILOT PROGRAM FOR THE ABOVE-IDENTIFIED APPLICATION. See Instruction Sheet on page 2.**

This petition must be timely filed electronically using the USPTO electronic filing system, EFS-Web.

1. By filing this petition:

   **Applicant is requesting early publication: Applicant hereby requests early publication under 37 CFR 1.219 and the publication fee set forth in 37 CFR 1.18(d) accompanies this request.**

2. By filing this petition: applicant is agreeing to make an election without traverse in a telephonic interview and elect an invention that meets the eligibility requirements for the Green Technology Pilot Program, if the Office determines that the claims are not obviously directed to a single invention. See Instruction Sheet.

3. This request is accompanied by statements of special status for the eligibility requirement.

4. The application contains no more than three (3) independent claims and twenty (20) total claims.

5. The application does not contain any multiple dependent claims.

6. Other attachments: _____

| Signature | Date December 23, 2010 |
|---|---|
| Name (Print/Typed) Daniel D. Tagliaferri | Registration Number 43,178 |

***Note:*** *Signatures of all the inventors or assignees of record of the entire interest or their representative(s) are required in accordance with 37 CFR 1.33 and 11.18. Please see 37 CFR 1.4(d) for the form of the signature. If necessary, submit multiple forms for more than one signature see below*.*

☒ *Total of 1 forms are submitted.

The information is required to obtain or retain a benefit by the public which is to file (and by the USPTO to process) an application. Confidentiality is governed by 35 U.S.C. 122 and 37 CFR 1.11 and 1.14. This collection is estimated to take 12 hours to complete, including gathering, preparing, and submitting the completed application form to the USPTO. Time will vary depending upon the individual case. Any comments on the amount of time you require to complete this form and/or suggestions for reducing this burden, should be sent to the Chief Information Officer, U.S. Patent and Trademark Office, U.S. Department of Commerce, P.O. Box 1450, Alexandria, VA 22313-1450. DO NOT SEND FEES OR COMPLETED FORMS TO THIS ADDRESS. **SEND TO: Commissioner for Patents, P.O. Box 1450, Alexandria, VA 22313-1450.**

*If you need assistance in completing the form, call 1-800-PTO-9199 and select option 2.*

UNITED STATES PATENT AND TRADEMARK OFFICE

UNITED STATES DEPARTMENT OF COMMERCE
United States Patent and Trademark Office
Address: COMMISSIONER FOR PATENTS
P.O. Box 1450
Alexandria, Virginia 22313-1450
www.uspto.gov

| APPLICATION NO. | FILING DATE | FIRST NAMED INVENTOR | ATTORNEY DOCKET NO. | CONFIRMATION NO. |
|---|---|---|---|---|
| 12/978,204 | 12/23/2010 | Tao Xu | BL080016US-CIP1 | 1789 |

81596 7590 03/01/2012
BridgeLux, Inc.
101 PORTOLA AVENUE
LIVERMORE, CA 94551

| EXAMINER |
|---|

| ART UNIT | PAPER NUMBER |
|---|---|
| 2811 | |

| MAIL DATE | DELIVERY MODE |
|---|---|
| 03/01/2012 | PAPER |

**Please find below and/or attached an Office communication concerning this application or proceeding.**

The time period for reply, if any, is set in the attached communication.

UNITED STATES PATENT AND TRADEMARK OFFICE

Commissioner for Patents
United States Patent and Trademark Office
P.O. Box 1450
Alexandria, VA 22313-1450
www.uspto.gov

BridgeLux, Inc.
101 PORTOLA AVENUE
LIVERMORE CA 94551

MAR 01 2012

In re Application of :

TAO XU :
Application No. 12/978,204 :
Filed: December 23, 2010 :
Attorney Docket No. BL080016US-CIP1 :

DECISION ON PETITION TO MAKE SPECIAL UNDER THE GREEN TECHNOLOGY PILOT PROGRAM

This is a decision on the petition under 37 CFR 1.102, filed December 23, 2010, to make the above-identified application special under the pilot program for applications pertaining to Green Technologies as set forth in 74 Federal Register Notice 64666 (December 8, 2009) and amended by 75 Federal Register Notice 28554 (May 21, 2010), 75 Federal Register Notice 69049 (November 10, 2010) and 76 Federal Register Notice 77979 (December 15, 2011).

The latest Notice extended the Green Technology Pilot Program to a total of 3,500 applications or March 30, 2012, whichever occurs earlier. As the program limit of 3500 granted petitions was reached for applications ready for decision on petition as of February 16, 2012, the program is now terminated. No further applications will be considered.

Accordingly , the petition is **DENIED**.

Additional information regarding the Green Technology Petition Pilot can be found at: http://www.uspto.gov/patents/init_events/green_tech.jsp.

/Blaine Copenheaver/

Blaine Copenheaver
Quality Assurance Specialist
Technology Center 1700

# UNITED STATES PATENT AND TRADEMARK OFFICE

UNITED STATES DEPARTMENT OF COMMERCE
United States Patent and Trademark Office
Address: COMMISSIONER FOR PATENTS
P.O. Box 1450
Alexandria, Virginia 22313-1450
www.uspto.gov

| APPLICATION NO. | FILING DATE | FIRST NAMED INVENTOR | ATTORNEY DOCKET NO. | CONFIRMATION NO. |
|---|---|---|---|---|
| 12/978,241 | 12/23/2010 | Dominique Deur-Bert | 77923.000003 | 1847 |

21967 7590 08/26/2011
HUNTON & WILLIAMS LLP
INTELLECTUAL PROPERTY DEPARTMENT
2200 Pennsylvania Avenue, N.W.
WASHINGTON, DC 20037

| EXAMINER |
|---|

| ART UNIT | PAPER NUMBER |
|---|---|
| 1621 | |

| MAIL DATE | DELIVERY MODE |
|---|---|
| 08/26/2011 | PAPER |

**Please find below and/or attached an Office communication concerning this application or proceeding.**

The time period for reply, if any, is set in the attached communication.

UNITED STATES PATENT AND TRADEMARK OFFICE

Commissioner for Patents
United States Patent and Trademark Office
P.O. Box 1450
Alexandria, VA 22313-1450
www.uspto.gov

HUNTON & WILLIAMS LLP
INTELLECTUAL PROPERTY DEPARTMENT
2200 Pennsylvania Avenue, N.W.
WASHINGTON DC 20037

Applicant: Deur-Bert et al.
Appl. No.: 12/978,241
Filing Date: December 23, 2010
Title: CATALYTIC GAS PHASE FLUORINATION OF 1233XF TO 1234YF
Attorney Docket No.: 77923.000003
Pub. No.: US 2011/0160497 A1
Pub. Date: June 30, 2011

This is a decision on the request for republication of patent application publication under 37 CFR 1.221(a), filed on August 18, 2011, for the above-identified application.

The request under 37 CFR 1.221(a) is DISMISSED.

37 CFR 1.221(a) requires "a copy of the application in compliance with the Office electronic filing system requirements and be accompanied by the publication fee set forth in § 1.18(d) and the processing fee set forth in § 1.17(i)". If the request for republication does not comply with the electronic filing system requirements, the republication will not take place and the publication fee set forth in § 1.18(d) will be refunded. The processing fee will be retained.

The applicant did not supply a copy of the application in compliance with the Office electronic filing system, as required by 37 CFR 1.221(a) because **the applicant submitted the papers as a "Document for an existing application", which are entered into the application file, and not as a "Pre-Grant Publication" submission**. The request for republication does not comply with the electronic filing system requirements, thus republication will not take place.

Any request for republication under 37 CFR 1.221(a), must be submitted via the EFS system, as a Pre-Grant publication submission and must include a copy of the application in compliance with the Office electronic filing system requirements. The applicant is directed to the following website for additional instructions on how to submit a Pre-Grant Publication submission via the electronic filing system:

http://www.uspto.gov/ebc/portal/efs/pgpub_quickstart.pdf

Any questions or requests for reconsideration of the decision should be addressed as follows:

By mail to: Mail Stop PGPUB
Commissioner for Patents
P.O. Box 1450
Alexandria, Va. 22313-1450

By facsimile: 571-273-8300

Telephone inquiries regarding this correspondence should be directed to The Office of Data Management at 571-272-4200.

Tammy J. Koontz
Office of Data Management
United States Patent & Trademark Office

```
Adjustment date: 08/26/2011  KKING1
08/19/2011 INTEFSW  00003043 500206   12978241
01 FC:1504        300.00 CR


08/26/2011 KKING1   00000001 500206   12978241

01 FC:1803        130.00 DA
```

UNITED STATES PATENT AND TRADEMARK OFFICE

Commissioner for Patents
United States Patent and Trademark Office
P.O. Box 1450
Alexandria, VA 22313-1450
www.uspto.gov

**Anwar Ahmad**
**Universiti Malaysia Pahang, Lebuhraya Tun Razak**
**26300 Gambang**
**Kuantan, Pahang 26300**
**Malaysia**

**MAILED**

FEB 10 2012

**OFFICE OF PETITIONS**

In re Application of :
Ahmad et al. :
Application No. 12/978,287 :
Filing Date: December 23, 2010 :
Attorney Docket No. AD_ML03 :

This is a decision on the letter from Darren Gardner, reg. no 54,113, filed January 10, 2012, stating that he is not associated with customer numbers: 69109; 14776; 69373; 72136; 92958 and 14392.

Applicant has specified that the power of attorney should be associated with customer number 72136 and that all correspondence for the above-identified application should be sent to the address associated with customer number 72136, which is ANDERSON TMP, INC, 1903 60 TH PLACE E, SUITE M5103, BRADENTON FL. The USPTO normally mails correspondence directly to the applicants, unless they are represented by an individual registered to practice before the USPTO. In order to practice before the USPTO, an attorney and/or agent must have a valid USPTO registration number as specified in 37 C.F.R. §132; *Manual of Patent Examination Procedure* (MPEP) §402. Mr. Gardner, the registered practitioner associated with the above indicated customer number (72136) has indicated to the Office that he is not associated with the customer number and has not had any involvement with the applications associated with the customer number.

Darren Gardner has been removed from the Customer Number associated with this application. Applicant is reminded that there is no attorney of record at this time.

Therefore, the designation of the customer number, which lists Mr. Gardner as having power of attorney and the correspondence address is void, *ab initio*. We will not recognize the appointment and all correspondence concerning this application must be signed by: 1) all named applicants (inventors), 2) all the owners of the rights to the invention, or 3) a registered attorney or agent duly appointed by the inventor(s) or the owner(s). Furthermore, all communications from the Office will be addressed to the first named inventor, unless specific instructions to the contrary are supplied by the applicant(s) for patent or owner(s).

While an applicant may prosecute the application, lack of skill in this field usually acts as a liability in affording the maximum protection for the invention disclosed. Applicant is, therefore, encouraged to secure the services of a registered patent attorney or agent (i.e., registered to practice before the U.S. Patent and Trademark Office) to prosecute the application, since the value of a patent is largely dependent upon skillful preparation and prosecution.

Since, it appears that applicant is not currently represented by, and if he wishes to obtain the services of, a registered attorney or agent, a listing of registered patent attorneys and agents is available online at https://oedci.uspto.gov/OEDCI/, or by calling the Office of Enrollment and Discipline at (571) 272-4097. Applicant may also obtain a list of registered patent attorneys and agents located in their area by writing to Mail Stop OED, Commissioner for Patents, Post Office Box 1450, Alexandria, VA 22313-1450. The Office cannot, however, aid in selecting an attorney or agent.

Information concerning the filing and/or prosecution of a patent application in the absence of an attorney or agent, including how to obtain forms, is available online at www.uspto.gov, or at the direct link for the Inventors Assistance Center http://www.uspto.gov/web/offices/pac/dapp/pacmain.html. The Inventors Assistance Center may also be contacted by calling (800) 786-9199, and by asking the operator for the Inventors Assistance Center.

Telephone inquiries concerning this decision should be directed to the undersigned at (571) 272-7709. All other inquiries concerning either the examination or status of the application should be directed to the Technology Center.

/Mark Polutta /
Mark Polutta
Senior Legal Advisor
Office of Patent Legal Administration
Office of the Deputy Commissioner
for Patent Examination Policy

cc: ANDERSON TMP , INC
1903 60 TH PLACE E
SUITE M5103
BRADENTON FL

UNITED STATES PATENT AND TRADEMARK OFFICE

UNITED STATES DEPARTMENT OF COMMERCE
United States Patent and Trademark Office
Address: COMMISSIONER FOR PATENTS
P.O. Box 1450
Alexandria, Virginia 22313-1450
www.uspto.gov

| APPLICATION NO. | FILING DATE | FIRST NAMED INVENTOR | ATTORNEY DOCKET NO. | CONFIRMATION NO. |
|---|---|---|---|---|
| 12/978,288 | 12/23/2010 | Laurent Wendlinger | 77923.000004 | 1954 |

21967 7590 08/26/2011
HUNTON & WILLIAMS LLP
INTELLECTUAL PROPERTY DEPARTMENT
2200 Pennsylvania Avenue, N.W.
WASHINGTON, DC 20037

| EXAMINER |
|---|

| ART UNIT | PAPER NUMBER |
|---|---|
| 1621 | |

| MAIL DATE | DELIVERY MODE |
|---|---|
| 08/26/2011 | PAPER |

**Please find below and/or attached an Office communication concerning this application or proceeding.**

The time period for reply, if any, is set in the attached communication.

UNITED STATES PATENT AND TRADEMARK OFFICE

Commissioner for Patents
United States Patent and Trademark Office
P.O. Box 1450
Alexandria, VA 22313-1450
www.uspto.gov

HUNTON & WILLIAMS LLP
INTELLECTUAL PROPERTY DEPARTMENT
2200 Pennsylvania Avenue, N.W.
WASHINGTON DC 20037

Applicant: Wendlinger et al.
Appl. No.: 12/978,288
Filing Date: December 23, 2010
Title: CATALYTIC GAS PHASE FLUORINATION OF 243DB TO 1234YF
Attorney Docket No.: 77923.000004
Pub. No.: US 2011/0160499 A1
Pub. Date: June 30, 2011

This is a decision on the request for republication of patent application publication under 37 CFR 1.221(a), filed on August 18, 2011, for the above-identified application.

The request under 37 CFR 1.221(a) is DISMISSED.

37 CFR 1.221(a) requires "a copy of the application in compliance with the Office electronic filing system requirements and be accompanied by the publication fee set forth in § 1.18(d) and the processing fee set forth in § 1.17(i)". If the request for republication does not comply with the electronic filing system requirements, the republication will not take place and the publication fee set forth in § 1.18(d) will be refunded. The processing fee will be retained.

The applicant did not supply a copy of the application in compliance with the Office electronic filing system, as required by 37 CFR 1.221(a) because **the applicant submitted the papers as a "Document for an existing application", which are entered into the application file, and not as a "Pre-Grant Publication" submission**. The request for republication does not comply with the electronic filing system requirements, thus republication will not take place.

Any request for republication under 37 CFR 1.221(a), must be submitted via the EFS system, as a Pre-Grant publication submission and must include a copy of the application in compliance with the Office electronic filing system requirements. The applicant is directed to the following website for additional instructions on how to submit a Pre-Grant Publication submission via the electronic filing system:

http://www.uspto.gov/ebc/portal/efs/pgpub_quickstart.pdf

Any questions or requests for reconsideration of the decision should be addressed as follows:

By mail to: Mail Stop PGPUB
Commissioner for Patents
P.O. Box 1450
Alexandria, Va. 22313-1450

By facsimile: 571-273-8300

Telephone inquiries regarding this correspondence should be directed to The Office of Data Management at 571-272-4200.

Tammy J. Koontz
Office of Data Management
United States Patent & Trademark Office

```
08/26/2011 KKING1   00000002 500206   12978288

01 FC:1803        130.00 DA


Adjustment date: 08/26/2011  KKING1
08/19/2011 INTEFSW  00002663 500206   12978288
01 FC:1504        300.00 CR
02 FC:1808        130.00 CR
```

UNITED STATES PATENT AND TRADEMARK OFFICE

2-16-2012

Commissioner for Patents
United States Patent and Trademark Office
P.O. Box 1450
Alexandria, VA 22313-1450
www.uspto.gov

Patent No : 8,099,652 B1
Ser. No. : 12/978,322
Inventor(s) : Idan Alrod, et. al.
Issued : January 17, 2012

Re: Request for Certificate of Correction

Consideration has been given your request for the issuance of a certificate of correction for the above-identified patent under the provisions of Rule(s) 1.322.

Assignees' names and addresses (assignment data) printed in a patent, are based *solely* on information supplied in the appropriate space for identifying the assignment data, i.e., item 3 of the Issue Fee Transmittal Form PTOL-85B. Granting of a request under 37 CFR 3.81(b) is required to correct applicant's error providing ***incorrect or erroneous*** assignment data, *before* issuance of a Certificate of Correction, under 37 CFR 1.323 *(see Manual of Patent Examining Procedures (M.P.E.P) Chp.1400, sect. 1481).* This procedure is required *at any time after the issue fee is paid*, including after issuance of the patent.

In view of the foregoing, your request is hereby denied.

A request to correct the Assignee under 37 CFR 3.81(b) should include:

A. **the processing fee set forth in 37 CFR 1.17(i) (currently $130);**
B. a statement that the failure to include the correct assignee name on the PTOL-85B was inadvertent; and
C. a copy of the Notice of Recordation of Assignment Document, reflecting the reel and frame number where the assignment(s) is recorded and/or reflecting proof of *the date* the assignment was submitted for recordation.

*In the Request*, Applicant(s) may request that the file be forwarded to Certificates of Correction Branch, for issuance of a Certificate of Correction, if the Request is granted.

Any request under 37 CFR 3.81(b) should be directed to the following address or facsimile number:

By mail: Mail Stop PETITIONS
Commissioner for Patents
Post Office Box 1450
Alexandria, VA 22313-1450

By hand: Customer Service Window
Mail Stop Petitions
Randolph Building
401 Dulany Street
Alexandria, VA 22314

By fax: (703) 872-9306
ATTN: Office of Petitions

If a fee (currently $100) was previously submitted for consideration of a Request for Certificate of Correction, under CFR 1.323, to correct assignment data, , no additional fee is required.

Eva James
For Mary Diggs
Decisions & Certificates
of Correction Branch
(571) 272-3422 or 703- 756 -1580

Davis Wright Tremaine LLP
505 Montgomery Street, Suite 800
San Francisco, CA 94111-6533

ej

**Doc Code: PET.GREEN**
**Document Description: Petition for Green Tech Pilot**

PTO/SB/420 (11-10)
Approved for use through 01/31/2011. OMB 0651-0062
U.S. Patent and Trademark Office; U.S. DEPARTMENT OF COMMERCE
Under the Paperwork Reduction Act of 1995, no persons are required to respond to a collection of information unless it displays a valid OMB control number.

# PETITION TO MAKE SPECIAL UNDER THE GREEN TECHNOLOGY PILOT PROGRAM

| | | | | |
|---|---|---|---|---|
| Attorney Docket Number: | 643842002200 | Application Number (if known): | 12/978,324 | Filing date: December 23, 2010 |
| First Named Inventor: | Zachary Q. BECK | | | |
| Title: | COMPOSITIONS AND METHODS OF PGL FOR THE INCREASED PRODUCTION OF ISOPRENE | | | |

**APPLICANT HEREBY REQUESTS TO PARTICIPATE IN THE GREEN TECHNOLOGY PILOT PROGRAM FOR THE ABOVE-IDENTIFIED APPLICATION. See Instruction Sheet on page 2.**

This petition must be timely filed electronically using the USPTO electronic filing system, EFS-Web.

1. By filing this petition:

   **Applicant is requesting early publication: Applicant hereby requests early publication under 37 CFR 1.219 and the publication fee set forth in 37 CFR 1.18(d) accompanies this request.**

2. By filing this petition: applicant is agreeing to make an election without traverse in a telephonic interview and elect an invention that meets the eligibility requirements for the Green Technology Pilot Program, if the Office determines that the claims are not obviously directed to a single invention. See Instruction Sheet.

3. This request is accompanied by statements of special status for the eligibility requirement.

4. The application contains no more than three (3) independent claims and twenty (20) total claims.

5. The application does not contain any multiple dependent claims.

6. Other attachments: Statement of Special Status (3 pages)

| | | | |
|---|---|---|---|
| Signature | /Terri Shieh-Newton/ | Date | January 6, 2012 |
| Name (Print/Typed) | Terri Shieh-Newton | Registration Number | 47,081 |

***Note**: Signatures of all the inventors or assignees of record of the entire interest or their representative(s) are required in accordance with 37 CFR 1.33 and 11.18. Please see 37 CFR 1.4(d) for the form of the signature. If necessary, submit multiple forms if more than one signature, see below*.*

[X] *Total of 1 forms are submitted.

UNITED STATES PATENT AND TRADEMARK OFFICE

UNITED STATES DEPARTMENT OF COMMERCE
United States Patent and Trademark Office
Address: COMMISSIONER FOR PATENTS
P.O. Box 1450
Alexandria, Virginia 22313-1450
www.uspto.gov

| APPLICATION NO. | FILING DATE | FIRST NAMED INVENTOR | ATTORNEY DOCKET NO. | CONFIRMATION NO. |
|---|---|---|---|---|
| 12/978,324 | 12/23/2010 | Zachary Q. Beck | 643842002200 | 1031 |

25226 7590 01/17/2012
MORRISON & FOERSTER LLP
755 PAGE MILL RD
PALO ALTO, CA 94304-1018

| EXAMINER |
|---|
| FRONDA, CHRISTIAN L |

| ART UNIT | PAPER NUMBER |
|---|---|
| 1652 | |

| NOTIFICATION DATE | DELIVERY MODE |
|---|---|
| 01/17/2012 | ELECTRONIC |

**Please find below and/or attached an Office communication concerning this application or proceeding.**

The time period for reply, if any, is set in the attached communication.

Notice of the Office communication was sent electronically on above-indicated "Notification Date" to the following e-mail address(es):

EOfficePA@mofo.com
drcaldwell@mofo.com
PatentDocket@mofo.com

UNITED STATES PATENT AND TRADEMARK OFFICE

Commissioner for Patents
United States Patent and Trademark Office
P.O. Box 1450
Alexandria, VA 22313-1450
www.uspto.gov

JAN 1 7 2012

MORRISON & FOERSTER LLP
755 PAGE MILL RD
PALO ALTO CA 94304-1018

| In re Application of | : | |
|---|---|---|
| BECK, Zachary *et al.* | : | DECISION ON PETITION |
| Application No. 12/978324 | : | TO MAKE SPECIAL UNDER |
| Filed: December 23, 2010 | : | THE GREEN TECHNOLOGY |
| Attorney Docket No. 643842002200 | : | PILOT PROGRAM |

This is a decision on the petition under 37 CFR 1.102, filed January 6, 2012, to make the above-identified application special under the pilot program for applications pertaining to Green Technologies as set forth in 74 Federal Register Notice 64666 (December 8, 2009) and amended by 75 Federal Register Notice 28554 (May 21, 2010) and 75 Federal Register Notice 69049 (November 10, 2010).

The petition is **GRANTED**.

A grantable petition to make an application special under 37 CFR 1.102 and the pilot program as set forth in 74 FR 64666 must be directed to a nonprovisional application filed under 35 USC 111(a) or be a national stage entry under 35 USC 371, exclusive of any reissue applications.

In order to qualify for special status, the following requirements must be met. 1) The application must have no more than 3 independent claims and no more than 20 total claims. 2) The application must not contain any multiple dependent claims. 3) The petition must state the basis for seeking special status, i.e., the claimed invention either: A) materially enhances the quality of the environment or B) materially contributes to: i) the discovery or development of renewable energy resources, ii) the more efficient utilization and conservation of energy resources, or iii) greenhouse gas emission reduction. 4) If the disclosure is not clear on its face that the claimed invention materially contributes under category (A) or (B), the petition must be accompanied by a statement by the applicant, assignee, or an attorney/agent registered to practice before the Office explaining how the materiality standard is met. 5) A statement that applicant will agree to make an election without traverse in a telephonic interview if a restriction requirement is made by the examiner. 6) The petition to make special must be filed electronically. 7) The petition must be filed at least one day prior to the date that a first Office Action appears in the Patent Application Information Retrieval (PAIR) system. 8) The petition must be accompanied by a request for early publication in compliance with 37 CFR 1.219 and include the publication fee as set forth in 37 CFR 1.18(d).

The requirement for a fee for consideration of the petition to make special for applications pertaining to Green Technologies has been waived.

The instant petition complies with items 1 – 8 above. Accordingly, the above-identified application has been accorded "special" status.

Telephone inquires concerning this decision should be directed to Manjunath Rao at 571-272-0939.

The application is being forwarded to the Technology Center Art Unit 1652 for action on the merits commensurate with this decision.

/Manjunath Rao/

Manjunath Rao
Supervisory Patent Examiner &
POC for TC 1600 Green Tech Petitions
Technology Center 1600

**Doc Code: PET.GREEN**
**Document Description: Petition for Green Tech Pilot**

PTO/SB/420 (03-11)

# PETITION TO MAKE SPECIAL UNDER THE GREEN TECHNOLOGY PILOT PROGRAM

| Attorney Docket Number: P3494US00 | Application Number (if known): 12/978,430 | Filing date: 12/24/2010 |
|---|---|---|

First Named Inventor: Ning CHONG

Title: ALGAL PURIFICATION SYSTEM WITH EFFICIENT SOLAR LIGHT UTILIZATION

**APPLICANT HEREBY REQUESTS TO PARTICIPATE IN THE GREEN TECHNOLOGY PILOT PROGRAM FOR THE ABOVE-IDENTIFIED APPLICATION. See Instruction Sheet on page 2.**

This petition must be timely filed electronically using the USPTO electronic filing system, EFS-Web.

1. By filing this petition:

   **Applicant is requesting early publication: Applicant hereby requests early publication under 37 CFR 1.219 and the publication fee set forth in 37 CFR 1.18(d) accompanies this request.**

2. By filing this petition: applicant is agreeing to make an election without traverse in a telephonic interview and elect an invention that meets the eligibility requirements for the Green Technology Pilot Program, if the Office determines that the claims are not obviously directed to a single invention. See Instruction Sheet.

3. This request is accompanied by statements of special status for the eligibility requirement.

4. The application contains no more than three (3) independent claims and twenty (20) total claims.

5. The application does not contain any multiple dependent claims.

6. Other attachments: _____

| Signature /Margaret Burke/ | Date 1 April 2011 |
|---|---|
| Name (Print/Typed) Margaret Burke | Registration Number 34,474 |

***Note:*** *Signatures of all the inventors or assignees of record of the entire interest or their representative(s) are required in accordance with 37 CFR 1.33 and 11.18. Please see 37 CFR 1.4(d) for the form of the signature. If necessary, submit multiple forms for more than one signature, see below*.*

■ *Total of 1 forms are submitted.

*If you need assistance in completing the form, call 1-800-PTO-9199 and select option 2.*

# Instruction Sheet for
# Petition to Make Special Under the Green Technology Pilot Program

(Not to be Submitted to the USPTO)

***The following is a summary of the requirements (for more information see the notices (i) "Pilot Program for Green Technologies Including Greenhouse Gas Reduction," (ii) "Elimination of Classification Requirement in the Green Technology Pilot Program," and (iii) "Expansion and Extension of the Green Technology Pilot Program," available on the USPTO web site at http://www.uspto.gov/patents/init_events/green_tech.jsp):***

(1) The application must be a non-reissue, non-provisional utility application filed under 35 U.S.C. 111(a), or an international application that has entered the national stage in compliance with 35 U.S.C. 371, irrespective of the filing date of the application. Reexamination proceedings are excluded from this pilot program.

(2) The application must contain three or fewer independent claims and twenty or fewer total claims. The application must not contain any multiple dependent claims. For an application that contains more than three independent claims or twenty total claims, or multiple dependent claims, applicant must file a preliminary amendment in compliance with 37 CFR 1.121 to cancel the excess claims and/or the multiple dependent claims at the time the petition to make special is filed.

(3) The claims must be directed to a single invention that materially enhances the quality of the environment, or that materially contributes to: (1) the discovery or development of renewable energy resources; (2) the more efficient utilization and conservation of energy resources; or (3) green house gas emission reduction (see the eligibility requirements of sections II and III of the notice (i) cited above). The petition must include a statement that, if the USPTO determines that the claims are directed to multiple inventions (e.g., in a restriction requirement), applicant will agree to make an election without traverse in a telephonic interview, and elect an invention that meets the eligibility requirements in section II or III of the notice (i) cited above.

(4) The petition to make special must be timely filed electronically using the USPTO electronic filing system, EFS-Web, and selecting the document description of "Petition for Green Tech Pilot" on the EFS-Web screen. Applicant should use form PTO/SB/420, which is available as a Portable Document Format (PDF) fillable form in EFS-Web and on the USPTO Web site.

(5) The petition to make special must be filed at least one day prior to the date that a first Office action (which may be an Office action containing only a restriction requirement) appears in the Patent Application Information Retrieval (PAIR) system. Applicant may check the status of the application using PAIR.

(6) The petition to make special must be accompanied by a request for early publication in compliance with 37 CFR 1.219 and the publication fee set forth in 37 CFR 1.18(d).

# Privacy Act Statement

The **Privacy Act of 1974 (P.L. 93-579)** requires that you be given certain information in connection with your submission of the attached form related to a patent application or patent. Accordingly, pursuant to the requirements of the Act, please be advised that: (1) the general authority for the collection of this information is 35 U.S.C. 2(b)(2); (2) furnishing of the information solicited is voluntary; and (3) the principal purpose for which the information is used by the U.S. Patent and Trademark Office is to process and/or examine your submission related to a patent application or patent. If you do not furnish the requested information, the U.S. Patent and Trademark Office may not be able to process and/or examine your submission, which may result in termination of proceedings or abandonment of the application or expiration of the patent.

The information provided by you in this form will be subject to the following routine uses:

1. The information on this form will be treated confidentially to the extent allowed under the Freedom of Information Act (5 U.S.C. 552) and the Privacy Act (5 U.S.C 552a). Records from this system of records may be disclosed to the Department of Justice to determine whether disclosure of these records is required by the Freedom of Information Act.
2. A record from this system of records may be disclosed, as a routine use, in the course of presenting evidence to a court, magistrate, or administrative tribunal, including disclosures to opposing counsel in the course of settlement negotiations.
3. A record in this system of records may be disclosed, as a routine use, to a Member of Congress submitting a request involving an individual, to whom the record pertains, when the individual has requested assistance from the Member with respect to the subject matter of the record.
4. A record in this system of records may be disclosed, as a routine use, to a contractor of the Agency having need for the information in order to perform a contract. Recipients of information shall be required to comply with the requirements of the Privacy Act of 1974, as amended, pursuant to 5 U.S.C. 552a(m).
5. A record related to an International Application filed under the Patent Cooperation Treaty in this system of records may be disclosed, as a routine use, to the International Bureau of the World Intellectual Property Organization, pursuant to the Patent Cooperation Treaty.
6. A record in this system of records may be disclosed, as a routine use, to another federal agency for purposes of National Security review (35 U.S.C. 181) and for review pursuant to the Atomic Energy Act (42 U.S.C. 218(c)).
7. A record from this system of records may be disclosed, as a routine use, to the Administrator, General Services, or his/her designee, during an inspection of records conducted by GSA as part of that agency's responsibility to recommend improvements in records management practices and programs, under authority of 44 U.S.C. 2904 and 2906. Such disclosure shall be made in accordance with the GSA regulations governing inspection of records for this purpose, and any other relevant (*i.e.*, GSA or Commerce) directive. Such disclosure shall not be used to make determinations about individuals.
8. A record from this system of records may be disclosed, as a routine use, to the public after either publication of the application pursuant to 35 U.S.C. 122(b) or issuance of a patent pursuant to 35 U.S.C. 151. Further, a record may be disclosed, subject to the limitations of 37 CFR 1.14, as a routine use, to the public if the record was filed in an application which became abandoned or in which the proceedings were terminated and which application is referenced by either a published application, an application open to public inspection or an issued patent.
9. A record from this system of records may be disclosed, as a routine use, to a Federal, State, or local law enforcement agency, if the USPTO becomes aware of a violation or potential violation of law or regulation.

**IN THE UNITED STATES PATENT AND TRADEMARK OFFICE**

| | | | | | |
|---|---|---|---|---|---|
| **Applicant** | **:** | **Ning Chong** | **Art Unit** | **:** | **1776** |
| **Serial No.** | **:** | **12/729,258** | **Examiner** | **:** | **Prince, Fred** |
| **Filed** | **:** | **24 December 2010** | **Conf. No.** | **:** | **1204** |

**Title : Algal Purification System with Efficient Solar Utilization**

---

**MAIL STOP: GREEN PILOT PROGRAM**
Honorable Commissioner for Patents
P.O. Box 1450
Alexandria, VA 22313-1450

**STATEMENT OF SPECIAL STATUS FOR GREEN TECHNOLOGY PILOT PROGRAM**

Dear Sir:

The present invention is directed to technology that qualifies for special status under the Green Technology Pilot Program. The claims are directed to "materially enhancing the quality of the environment by contributing to the restoration or maintenance of the basic life-sustaining natural elements." In the present application, wastewater is purified using microorganisms such as algae with the assistance of enhanced lighting. In an optional embodiment, the microorganisms are used to create a renewable fuel source such as biodiesel. In a further embodiment, a method reduces greenhouse gas emissions by converting power plant $CO_2$-containing waste gases to fuel for the microorganisms and heat for the growth of the microorganisms. By the

concurrently-filed preliminary amendment, the application contains 20 claims and two independent claims. If restriction is required, applicant will elect without traverse by telephone.

In view of the foregoing remarks, it is respectfully submitted that the present application should be accorded special status. Early and favorable action is respectfully requested.

1 April 2011

Respectfully submitted,

/Margaret Burke/

Customer No.: 95527

Margaret Burke
Registration No. 34,474
Attorney for Applicants

UNITED STATES PATENT AND TRADEMARK OFFICE

UNITED STATES DEPARTMENT OF COMMERCE
United States Patent and Trademark Office
Address: COMMISSIONER FOR PATENTS
P.O. Box 1450
Alexandria, Virginia 22313-1450
www.uspto.gov

| APPLICATION NO. | FILING DATE | FIRST NAMED INVENTOR | ATTORNEY DOCKET NO. | CONFIRMATION NO. |
|---|---|---|---|---|
| 12/978,430 | 12/24/2010 | Ning CHONG | P3494US00 | 1204 |

95527 7590 05/13/2011
Ella Cheong Hong Kong
5001 Hopewell Centre, 183 Queen's Road East,
Wan Chai,
HONG KONG

| EXAMINER |
|---|
| PRINCE, FRED G |

| ART UNIT | PAPER NUMBER |
|---|---|
| 1778 | |

| NOTIFICATION DATE | DELIVERY MODE |
|---|---|
| 05/13/2011 | ELECTRONIC |

**Please find below and/or attached an Office communication concerning this application or proceeding.**

The time period for reply, if any, is set in the attached communication.

Notice of the Office communication was sent electronically on above-indicated "Notification Date" to the following e-mail address(es):

mburke@ellacheong.com
syip@ellacheong.com
ewong@ellacheong.com

UNITED STATES PATENT AND TRADEMARK OFFICE

Commissioner for Patents
United States Patent and Trademark Office
P.O. Box 1450
Alexandria, VA 22313-1450
www.uspto.gov

5/13/11

Ella Cheong Hong Kong
5001 Hopewell Centre, 183 Queen's Road East,
Wan Chai HK HONG KONG

| | | |
|---|---|---|
| In re Application of | : | |
| Chong et al. | : | DECISION ON PETITION |
| Application No. 12/978,430 | : | TO MAKE SPECIAL UNDER |
| Filed: 12/24/2010 | : | THE GREEN TECHNOLOGY |
| Attorney Docket No. **P3494US00** | : | PILOT PROGRAM |

This is a decision on the petition under 37 CFR 1.102, filed 4/1/2011, to make the above-identified application special under the pilot program for applications pertaining to Green Technologies as set forth in 74 Federal Register Notice 64666 (December 8, 2009) and amended by 75 Federal Register Notice 28554 (May 21, 2010) and 75 Federal Register Notice 69049 (November 10, 2010).

The petition is **GRANTED**.

A grantable petition to make an application special under 37 CFR 1.102 and the pilot program as set forth in 74 FR 64666 must be directed to a nonprovisional application filed under 35 USC 111(a) or be a national stage entry under 35 USC 371, exclusive of any reissue applications.

In order to qualify for special status, the following requirements must be met. 1) The application must have no more than 3 independent claims and no more than 20 total claims. 2) The application must not contain any multiple dependent claims. 3) The petition must state the basis for seeking special status, i.e., the claimed invention either: A) materially enhances the quality of the environment or B) materially contributes to: i) the discovery or development of renewable energy resources, ii) the more efficient utilization and conservation of energy resources, or iii) greenhouse gas emission reduction. 4) If the disclosure is not clear on its face that the claimed invention materially contributes under category (A) or (B), the petition must be accompanied by a statement by the applicant, assignee, or an attorney/agent registered to practice before the Office explaining how the materiality standard is met. 5) A statement that applicant will agree to make an election without traverse in a telephonic interview if a restriction requirement is made by the examiner. 6) The petition to make special must be filed electronically. 7) The petition must be filed at least one day prior to the date that a first Office Action appears in the Patent Application Information Retrieval (PAIR) system. 8) The petition must be accompanied by a request for early publication in compliance with 37 CFR 1.219 and include the publication fee as set forth in 37 CFR 1.18(d).

The requirement for a fee for consideration of the petition to make special for applications pertaining to Green Technologies has been waived.

The instant petition complies with items 1 – 8 above. Accordingly, the above-identified application has been accorded "special" status.

Telephone inquires concerning this decision should be directed to Tom Dunn at 571-272-1171.

The application is being forwarded to the Technology Center Art Unit 1778 for action on the merits commensurate with this decision.

/Tom Dunn/

Tom Dunn
Quality Assurance Specialist
Technology Center 1700

UNITED STATES PATENT AND TRADEMARK OFFICE

Commissioner for Patents
United States Patent and Trademark Office
P.O. Box 1450
Alexandria, VA 22313-1450
www.uspto.gov

| | |
|---|---|
| In re Application of<br>Peter Langer | :<br>: |
| Application No. 12978442<br>Filed:<br><br>Attorney Docket No. | :DECISION ON PETITION TO MAKE SPECIAL<br>:UNDER 37 CFR 1.102(c)(1)<br>: |

This is a decision on the electronic petition under 37 CFR 1.102 (c)(1), filed 24-DEC-2010 to make the above-identified application special based on applicant's age as set forth in MPEP § 708.02, Section IV.

The petition is **GRANTED**.

A grantable petition to make an application special under 37 CFR 1.102(c)(1), MPEP § 708.02, Section IV: Applicant's Age must include a statement by applicant or a registered practitioner having evidence that applicant is at least 65 years of age. No fee is required.

Accordingly, the above-identified application has been accorded "special" status and will be taken up for action by the examiner upon the completion of all pre-examination processing.

Telephone inquiries concerning this electronic decision should be directed to the Electronic Business Center at 866-217-9197.

All other inquiries concerning either the examination or status of the application should be directed to the Technology Center.

UNITED STATES PATENT AND TRADEMARK OFFICE

Commissioner for Patents
United States Patent and Trademark Office
P.O. Box 1450
Alexandria, VA 22313-1450
www.uspto.gov

In re Application of
Reuven Bakalash

Application No. 12978493

Filed:

Attorney Docket No. BAK-12-2010

:DECISION ON PETITION TO MAKE SPECIAL
:UNDER 37 CFR 1.102(c)(1)

This is a decision on the electronic petition under 37 CFR 1.102 (c)(1), filed 03-JAN-2011 to make the above-identified application special based on applicant's age as set forth in MPEP § 708.02, Section IV.

The petition is **GRANTED**.

A grantable petition to make an application special under 37 CFR 1.102(c)(1), MPEP § 708.02, Section IV: Applicant's Age must include a statement by applicant or a registered practitioner having evidence that applicant is at least 65 years of age. No fee is required.

Accordingly, the above-identified application has been accorded "special" status and will be taken up for action by the examiner upon the completion of all pre-examination processing.

Telephone inquiries concerning this electronic decision should be directed to the Electronic Business Center at 866-217-9197.

All other inquiries concerning either the examination or status of the application should be directed to the Technology Center.

Doc code : PET.OP.AGE
Description : Petition to make special based on Age/Health

PTO/SB/130 (07-09)
Approved for use through 07/31/2012. OMB 0651- 0031
U.S. Patent and Trademark Office; U.S. DEPARTMENT OF COMMERCE
Under the Paperwork Reduction Act of 1995, no persons are required to respond to a collection of information unless it contains a valid OMB control number

# PETITION TO MAKE SPECIAL BASED ON AGE FOR ADVANCEMENT OF EXAMINATION UNDER 37 CFR 1.102(c)(1)

## Application Information

| | | | | | |
|---|---|---|---|---|---|
| Application Number | 12978494 | Confirmation Number | 1317 | Filing Date | 2010-12-24 |
| Attorney Docket Number (optional) | 8096.020.CNUS02 | Art Unit | 2614 | Examiner | unknown |
| First Named Inventor | Sigram Schindler | | | | |
| Title of Invention | METHOD FOR MODIFYING THE OPERATING MODE OF A TECHNICAL COMMUNICATIONS GROUP PLATFORM (TCGPL) OF A TELECOMMUNICATIONS NETWORK (TC NETWORK) | | | | |

**Attention: Office of Petitions**

An application may be made special for advancement of examination upon filing of a petition showing that the applicant is 65 years of age, or more. No fee is required with such a petition. See 37 CFR 1.102(c)(1) and MPEP 708.02 (IV).

APPLICANT HEREBY PETITIONS TO MAKE SPECIAL FOR ADVANCEMENT OF EXAMINATION IN THIS APPLICATION UNDER 37 CFR 1.102(c)(1) and MPEP 708.02 (IV) ON THE BASIS OF THE APPLICANT'S AGE.

A grantable petition requires one of the following items:
(1) Statement by one named inventor in the application that he/she is 65 years of age, or more; or
(2) Certification by a registered attorney/agent having evidence such as a birth certificate, passport, driver's license, etc. showing one named inventor in the application is 65 years of age, or more.

**Name of Inventor who is 65 years of age, or older**

| Given Name | Middle Name | Family Name | Suffix |
|---|---|---|---|
| Sigram | | Schindler | |

A signature of the applicant or representative is required in accordance with 37 CFR 1.33 and 10.18.
Please see 37 CFR 1.4(d) for the format of the signature.

Select (1) or (2) :

○ (1) I am an inventor in this application and I am 65 years of age, or more.

● (2) I am an attorney or agent registered to practice before the Patent and Trademark Office, and I certify that I am in possession of evidence, and will retain such in the application file record, showing that the inventor listed above is 65 years of age, or more.

| | | | |
|---|---|---|---|
| Signature | /Vincent M DeLuca/ | Date (YYYY-MM-DD) | 2011-06-28 |
| Name | Vincent M DeLuca | Registration Number | 32408 |

PTO/SB/130 (07-09)
Approved for use through 07/31/2012. OMB 0651- 0031
U.S. Patent and Trademark Office; U.S. DEPARTMENT OF COMMERCE
Under the Paperwork Reduction Act of 1995, no persons are required to respond to a collection of information unless it contains a valid OMB control number

# Privacy Act Statement

The Privacy Act of 1974 (P.L. 93-579) requires that you be given certain information in connection with your submission of the attached form related to a patent application or patent. Accordingly, pursuant to the requirements of the Act, please be advised that: (1) the general authority for the collection of this information is 35 U.S.C. 2(b)(2); (2) furnishing of the information solicited is voluntary; and (3) the principal purpose for which the information is used by the U.S. Patent and Trademark Office is to process and/or examine your submission related to a patent application or patent. If you do not furnish the requested information, the U.S. Patent and Trademark Office may not be able to process and/or examine your submission, which may result in termination of proceedings or abandonment of the application or expiration of the patent.

The information provided by you in this form will be subject to the following routine uses:

1. The information on this form will be treated confidentially to the extent allowed under the Freedom of Information Act (5 U.S.C. 552) and the Privacy Act (5 U.S.C. 552a). Records from this system of records may be disclosed to the Department of Justice to determine whether the Fr eedom of Information Act requires disclosure of these records.

2. A record from this system of records may be disclosed, as a routine use, in the course of presenting evidence to a court, magistrate, or administrative tribunal, including disclosures to opposing counsel in the course of settlement negotiations.

3. A record in this system of records may be disclosed, as a routine use, to a Member of Congress submitting a request involving an individual, to whom the record pertains, when the individual has requested assistance from the Member with respect to the subject matter of the record.

4. A record in this system of records may be disclosed, as a routine use, to a contractor of the Agency having need for the information in order to perform a contract. Recipients of information shall be required to comply with the requirements of the Privacy Act of 1974, as amended, pursuant to 5 U.S.C. 552a(m).

5. A record related to an International Application filed under the Patent Cooperation Treaty in this system of records may be disclosed, as a routine use, to the International Bureau of the World Intellectual Property Organization, pursuant to the Patent Cooperation Treaty.

6. A record in this system of records may be disclosed, as a routine use, to another federal agency for purposes of National Security review (35 U.S.C. 181) and for review pursuant to the Atomic Energy Act (42 U.S.C. 218(c)).

7. A record from this system of records may be disclosed, as a routine use, to the Administrator, General Services, or his/her designee, during an inspection of records conducted by GSA as part of that agency's responsibility to recommend improvements in records management practices and programs, under authority of 44 U.S.C. 2904 and 2906. Such disclosure shall be made in accordance with the GSA regulations governing inspection of records for this purpose, and any other relevant (i.e., GSA or Commerce) directive. Such disclosure shall not be used to make determinations about indivi duals.

8. A record from this system of records may be disclosed, as a routine use, to the public after either publication of the application pursuant to 35 U.S.C. 122(b) or issuance of a patent pursuant to 35 U.S.C. 151. Further, a record may be disclosed, subject to the limitations of 37 CFR 1.14, as a routine use, to the public if the record was filed in an application which became abandoned or in which the proceedings were terminated and which application is referenced by either a published application, an application open to public inspections or an issued patent.

9. A record from this system of records may be disclosed, as a routine use, to a Federal, State, or local law enforcement agency, if the USPTO becomes aware of a violation or potential violation of law or regulation.

UNITED STATES PATENT AND TRADEMARK OFFICE

Commissioner for Patents
United States Patent and Trademark Office
P.O. Box 1450
Alexandria, VA 22313-1450
www.uspto.gov

In re Application of
Sigram Schindler

Application No. 12978494

Filed: December 24,2010

Attorney Docket No. 8096.020.CNUS02

:DECISION ON PETITION TO MAKE SPECIAL
:UNDER 37 CFR 1.102(c)(1)

This is a decision on the electronic petition under 37 CFR 1.102 (c)(1), filed 28-JUN-2011 to make the above-identified application special based on applicant's age as set forth in MPEP § 708.02, Section IV.

The petition is **GRANTED**.

A grantable petition to make an application special under 37 CFR 1.102(c)(1), MPEP § 708.02, Section IV: Applicant's Age must include a statement by applicant or a registered practitioner having evidence that applicant is at least 65 years of age. No fee is required.

Accordingly, the above-identified application has been accorded "special" status and will be taken up for action by the examiner upon the completion of all pre-examination processing.

Telephone inquiries concerning this electronic decision should be directed to the Electronic Business Center at 866-217-9197.

All other inquiries concerning either the examination or status of the application should be directed to the Technology Center.

UNITED STATES PATENT AND TRADEMARK OFFICE

Commissioner for Patents
United States Patent and Trademark Office
P.O. Box 1450
Alexandria, VA 22313-1450
www.uspto.gov

MAILED
AUG 26 2011
OFFICE OF PETITIONS

BUCHANAN, INGERSOLL & ROONEY PC
POST OFFICE BOX 1404
ALEXANDRIA VA 22313-1404

In re Application of :
Matsunaga, et al. :
Application No. 12/978,715 : DECISION ACCORDING STATUS
Filed: December 27, 2010 : UNDER 37 CFR 1.47(a)
Attorney Docket No. **0070221-000059** :
For: IMAGE FORMATION APPARATUS, PRINTING DATA GENERATION APPARATUS, COMPUTER-READABLE RECORDING MEDIUM, AND PRINTING DATA GENERATION METHOD

This is in response to the petition under 37 CFR 1.47(a), filed August 17, 2011.

The petition is **GRANTED**.

The above-identified application and papers have been reviewed and found in compliance with 37 CFR 1.47(a). This application is hereby accorded Rule 1.47(a) status.

The above-identified application was filed on December 27, 2010, and was not accompanied by a properly executed oath or declaration. A Notice to File Missing Parts of Nonprovisional Application was mailed on January 18, 2011, requiring a proper oath or declaration and allowing an extendable period for reply of two months from its mailing date. The instant petition was filed on August 17, 2011, with a request for an extension of time within the fifth month.

Petitioner has shown that inventor Akiyama cannot be located join the prosecution of the application. The above-identified application and papers have been reviewed and found in compliance with 37 CFR 1.47(a). This application is hereby accorded Rule 1.47(a) status.

As provided in Rule 1.47(c), this Office will forward notice of this application's filing to the non-signing inventor at the address given in the petition. Notice of the filing of this application will also be published in the Official Gazette.

This application will be forwarded to the Office of Patent Application Processing for further processing.

Telephone inquiries concerning this decision should be directed to the undersigned at (571) 272-3222.

/Kenya A. McLaughlin/

Kenya A. McLaughlin
Petitions Attorney
Office of Petitions

UNITED STATES PATENT AND TRADEMARK OFFICE

Commissioner for Patents
United States Patent and Trademark Office
P.O. Box 1450
Alexandria, VA 22313-1450
www.uspto.gov

Fumihito Akiyama
15-7 Asahigaoka #201
Kanagawa-ku
Yokohama-shi, Kanagawa 221-0814
JAPAN

MAILED
AUG 26 2011
OFFICE OF PETITIONS

In re Application of :
Matsunaga, et al. :
Application No. 12/978,715 : LETTER
Filed: December 27, 2010 :
Attorney Docket No. **0070221-000059** :
For: IMAGE FORMATION APPARATUS, PRINTING DATA GENERATION APPARATUS, COMPUTER-READABLE RECORDING MEDIUM, AND PRINTING DATA GENERATION METHOD

Dear Sir:

You are named as a joint inventor in the above-identified United States patent application filed under the provisions of 35 U.S.C. 116 (United States Code) and 37 CFR 1.47(a), Rules of Practice in Patent Cases. Should a patent be granted on the application you will be designated therein as a joint inventor.

As a joint inventor, you are entitled to inspect any paper in the file wrapper of the application, order copies of all or any part thereof (at a prepaid cost per 37 CFR 1.19) or make your position of record in the application. Alternatively, you may arrange to do any of the preceding through a registered patent attorney or agent presenting written authorization from you. If you care to join the application, counsel of record (see below) would presumably assist you. Joining in the application would entail the filing of an appropriate oath or declaration by you pursuant to 37 CFR 1.63.

Telephone inquiries regarding this communication should be directed to Petitions Attorney Kenya A. McLaughlin at (571) 272-3222. Requests for information regarding your application should be directed to the File Information Unit at (703) 308-2733. Information regarding how to pay for and order a copy of the application, or a specific paper in the application, should be directed to Certification Division at (703) 308-9726 or 1-800-972-6382 (outside the Washington D.C. area).

/Kenya A. McLaughlin/

Kenya A. McLaughlin
Petitions Attorney
Office of Petitions

BUCHANAN, INGERSOLL & ROONEY PC
POST OFFICE BOX 1404
ALEXANDRIA VA 22313-1404

UNITED STATES PATENT AND TRADEMARK OFFICE

Commissioner for Patents
United States Patent and Trademark Office
P.O. Box 1450
Alexandria, VA 22313-1450
www.uspto.gov

**DRINKER BIDDLE & REATH (DC)**
**1500 K STREET, N.W., SUITE 1100**
**WASHINGTON DC 20005-1209**

MAILED
MAR 22 2012
OFFICE OF PETITIONS

**In re Application of**
**Hiromitsu Takahashi et al**
**Application No.: 12/978,812**
**Filed: December 27, 2010**
**Attorney Docket No.: 047260-5130**
**For: POSITION DETECTION DEVICE AND A POSITION DETECTION METHOD FOR A WORKPIECE TO BE WELDED**

**: DECISION ON REQUEST TO**
**: PARTICIPATE IN THE PATENT**
**: PROSECUTION HIGHWAY**
**: PROGRAM AND PETITION**
**: TO MAKE SPECIAL UNDER**
**: 37 CFR 1.102(a)**

This is a decision on the request to participate in the Patent Prosecution Highway (PPH) program and the petition under 37 CFR 1.102(a), filed December 14, 2011, to make the above-identified application special.

The request and petition are **GRANTED**.

**Discussion**

A grantable request to participate in the PPH pilot program and petition to make special require:

1. The U.S. application is

    a. a Paris Convention application which either
        i. validly claims priority under 35 U.S.C. 119(a) and 37 CFR 1.55 to one or more applications filed in the JPO, or
        ii. validly claims priority to a PCT application that contains no priority claims, or
    b. a national stage application under the PCT (an application which entered the national stage in the U.S. from a PCT international application after compliance with 35 U.S.C. 371), which PCT application
        i. validly claims priority to an application filed in the JPO, or
        ii. validly claims priority to a PCT application that contains no priority claims, or
        iii. contains no priority claim, or
    c. a so-called bypass application filed under 35 U.S.C. 111(a) which validly claims benefit under 35 U.S.C. 120 to a PCT application, which PCT application
        i. validly claims priority to an application filed in the JPO, or
        ii. validly claims priority to a PCT application that contains no priority claims, or
        iii. contains no priority claim;

2. Applicant must submit a copy of:
    a. The allowable/patentable claim(s) from the JPO application(s);
    b. An English translation of the allowable/patentable claim(s) and
    c. A statement that the English translation is accurate;
3. Applicant must:
    a. Ensure all the claims in the U.S. application must sufficiently correspond or be amended to sufficiently correspond to the allowable/patentable claim(s) in the JPO application(s) and
    b. Submit a claims correspondence table in English;
4. Examination of the U.S. application has not begun;
5. Applicant must submit:
    a. Documentation of prior office action:
        i. a copy of the office action(s) just prior to the "Decision to Grant a Patent" from each of the JPO application(s) containing the allowable/patentable claim(s) or
        ii. if the allowable/patentable claims(s) are from a "Notification of Reasons for Refusal" then the Notification of Reasons for Refusal or
        iii. if the JPO application is a first action allowance then no office action from the JPO is necessary should be indicated on the request/petition form;
    b. An English language translation of the JPO Office action from (5)(a)(i)-(ii) above
    c. A statement that the English translation is accurate;
6. Applicant must submit:
    a. An IDS listing the documents cited by the JPO examiner in the JPO office action (unless already submitted in this application)
    b. Copies of the documents except U.S. patents or U.S. patent application publications (unless already submitted in this application);

The request to participate in the PPH pilot program and petition comply with the above requirements. Accordingly, the above-identified application has been accorded "special" status.

Inquiries concerning this decision should be directed to Irvin Dingle at (571) 272-3210.

All other inquiries concerning the examination or status of the application is accessible in the PAIR system at http://www.uspto.gov/ebc.index.html.

This application will be forwarded to the examiner for action on the merits commensurate with this decision once this application's formality reviews have been completed.

David Bucci
Petitions Examiner
Office of Petitions

UNITED STATES PATENT AND TRADEMARK OFFICE

Commissioner for Patents
United States Patent and Trademark Office
P.O. Box 1450
Alexandria, VA 22313-1450
www.uspto.gov

MAILED
JUN 03 2011
OFFICE OF PETITIONS

MORGAN LEWIS & BOCKIUS LLP (WA)
1111 PENNSYLVANIA AVENUE NW
WASHINGTON DC 20004

| | | |
|---|---|---|
| In re Application of<br>THOMPSON et al.<br>Application No. 12/978,834<br>Filed: 12/27/2010<br>Attorney Docket No. 061945-5017-03<br>Title: DNA ENCODING A PLANT DEOXYHYPUSINE SYNTHASE, A PLANT EUKARYOTIC INITIATION FACTOR 5A, TRANSGENIC PLANTS AND A METHOD FOR CONTROLLING SENESCENCE PROGRAMMED AND CELL DEATH IN PLANTS | : | ON PETITION |

This is in response to the petition under 37 CFR 1.47(a) filed December 27, 2010.

The Office notes that the rules and statutory provisions governing the operations of the USPTO require payment of a fee upon filing a petition. Absent payment of the required petition fee, the Office will not consider the merits of a petition.

A petition under 37 CFR 1.47 must be accompanied by the fee of $200.00 specified in 37 CFR 1.17(g). Applicants did not submit a petition fee or a proper authorization to charge any necessary fees to a Deposit Account.[1] Therefore, the merits of the petition will not be considered at this time. Accordingly, the petition is **dismissed**.

Nevertheless, the Office reminds applicants that a grantable petition under 37 CFR 1.47(a) requires: (1) proof that the non-signing inventor cannot be reached or refuses to sign the oath or declaration after having been presented with the application papers (specification, claims and drawings); (2) an acceptable oath or declaration in compliance with 35 U.S.C. §§ 115 and 116; (3) the petition fee; and (4) a statement of the last known address of the non-signing inventor.

[1] The Office notes that practitioner Teresa A. Lavenue does not have the authority to authorize the charging of the Deposit Account listed on the petition.

Specifically, applicants must submit sufficient proof that the non-signing inventor was sent or presented with a complete copy of this application (12/978,834) as filed (specification, including the claims, drawings, if any, and the declaration). See MPEP 409.03(d). Additionally, applicants must demonstrate that the non-signing inventor has expressly or through his conduct refused to join in this application or cannot be located after diligent effort.

Pursuant to MPEP 409.03(d)(II),

> A refusal by an inventor to sign an oath or declaration when the inventor has not been presented with the application papers does not itself suggest that the inventor is refusing to join the application unless it is clear that the inventor understands exactly what he or she is being asked to sign and refuses to accept the application papers. A copy of the application papers should be sent to the last known address of the nonsigning inventor, or, if the nonsigning inventor is represented by counsel, to the address of the nonsigning inventor's attorney. The fact that an application may contain proprietary information does not relieve the 37 CFR 1.47 applicant of the responsibility to present the application papers to the inventor if the inventor is willing to receive the papers in order to sign the oath or declaration. It is noted that the inventor may obtain a complete copy of the application, unless the inventor has assigned his or her interest in the application, and the assignee has requested that the inventor not be permitted access. *See* MPEP § 106. It is reasonable to require that the inventor be presented with the application papers before a petition under 37 CFR 1.47 is granted since such a procedure ensures that the inventor is apprised of the application to which the oath or declaration is directed. In re Gray, 115 USPQ 80 (Comm'r Pat. 1956).
>
> Where a refusal of the inventor to sign the application papers is alleged, the circumstances of the presentation of the application papers and of the refusal must be specified in a statement of facts by the person who presented the inventor with the application papers and/or to whom the refusal was made. Statements by a party not present when an oral refusal is made will not be accepted.
>
> Proof that a bona fide attempt was made to present a copy of the application papers (specification, including claims, drawings, and oath or declaration) to the nonsigning inventor for signature, but the inventor refused to accept delivery of the papers or expressly stated that the application papers should not be sent, may be sufficient. When there is an express oral refusal, that fact along with the time and place of the refusal must be stated in the statement of facts. When there is an express written refusal, a copy of the document evidencing that refusal must be made part of the statement of facts. The document may be redacted to remove material not related to the inventor's reasons for refusal.

> When it is concluded by the 37 CFR 1.47 applicant that a nonsigning inventor's conduct constitutes a refusal, all facts upon which that conclusion is based should be stated in the statement of facts in support of the petition or directly in the petition. If there is documentary evidence to support facts alleged in the petition or in any statement of facts, such evidence should be submitted. Whenever a nonsigning inventor gives a reason for refusing to sign the application oath or declaration, that reason should be stated in the petition.

In any renewed petition, applicants must demonstrate that they presented the application papers for this application to the non-signing inventor. Applicants may show that a copy of the application was mailed or presented to the non-signing inventor for review by providing a copy of the cover letter transmitting the application papers to the non-signing inventor or details given in an affidavit or declaration of facts by a person having first-hand knowledge of the events. If the non-signing inventor refuses to execute the declaration in writing, applicants must submit a copy of that written refusal with any renewed petition. Likewise, if the non-signing inventor makes an oral refusal to a person, then that individual must provide details of the refusal in an affidavit or declaration of fact. If the non-signing inventor refuses to accept delivery of the papers or the inventor's conduct constitutes a refusal to join in the application, applicants will have provided proof of refusal to sign the declaration.

Where inability to find or reach the non-signing inventor "after diligent effort" is the reason for filing under 37 CFR 1.47 a statement of facts should be submitted that fully describes the exact facts which are relied on to establish that a diligent effort was made to locate the inventor. If attempts to obtain a forwarding address or to locate non-signing inventor by other means such as an Internet search fail, then applicants will have provided the necessary proof that the inventor cannot be reached after diligent effort. The results of any Internet search should be provided.

Applicants are given TWO MONTHS from the mailing date of this decision to reply, correcting the below-noted deficiencies. Any reply should be entitled "Request for Reconsideration of Petition Under 37 CFR 1.47(a)," and should address the deficiencies noted below, except that the reply may include an oath or declaration executed by the non-signing inventor. **FAILURE TO RESPOND WILL RESULT IN ABANDONMENT OF THE APPLICATION.** Any extensions of time will be governed by 37 CFR 1.136(a).

The Office notes that applicants submitted a copy of the executed declaration in Application No. 10/854,699, for which 1.47 status was granted. The present application is not a continuation or a divisional application of Application No. 10/854,699. Thus, applicants may not seek 1.47 status in this application based on the granting of such status in Application No. 10/854,699 pursuant to 37 CFR 1.63(d)(3).

Further correspondence with respect to this matter should be addressed as follows:

By mail: Mail Stop PETITIONS
Commissioner for Patents
Post Office Box 1450
Alexandria, VA 22313-1450

By hand: Customer Service Window
Mail Stop Petitions
Randolph Building
401 Dulany Street
Alexandria, VA 22314

By fax: (571) 273-8300
ATTN: Office of Petitions

Correspondence may also be submitted electronically to the USPTO.

Telephone inquiries should be directed to the undersigned at (571) 272-3211.

Christina Tartera Donnell

Christina Tartera Donnell
Senior Petitions Attorney
Office of Petitions

UNITED STATES PATENT AND TRADEMARK OFFICE

Commissioner for Patents
United States Patent and Trademark Office
P.O. Box 1450
Alexandria, VA 22313-1450
www.uspto.gov

MAILED
AUG 10 2011
OFFICE OF PETITIONS

MORGAN LEWIS & BOCKIUS LLP (WA)
1111 PENNSYLVANIA AVENUE NW
WASHINGTON DC 20004

| | |
|---|---|
| In re Application of | : DECISION DISMISSING PETITION |
| THOMPSON et al. | : UNDER 37 CFR 1.78(a)(3) |
| Application No. 12/978,834 | : |
| Filed: 12/27/2010 | : |
| Attorney Docket No. 061945-5017-03 | : |

This is a decision on the petition under 37 CFR 1.78(a)(3), filed August 3, 2011, to accept an unintentionally delayed claim under 35 U.S.C. 120 for the benefit of prior-filed nonprovisional Application No. 10/854,699 filed May 27, 2004, set forth in the concurrently filed amendment.

The petition is **DISMISSED.**

A petition for acceptance of an unintentionally delayed claim under 35 U.S.C. 120 for the benefit of prior-filed nonprovisional applications pursuant to 37 CFR 1.78(a)(3) is applicable to those applications filed on or after November 29, 2000. Further, the petition is appropriate only after the expiration of the period specified in 37 CFR 1.78(a)(2)(ii). In addition, the petition under 37 CFR 1.78(a)(3) must be accompanied by:

**(1)** the reference required by 35 U.S.C. 120 and 37 CFR 1.78(a)(2)(i) of the prior-filed application, unless previously submitted;
**(2)** the surcharge set forth in § 1.17(t); and
**(3)** a statement that the entire delay between the date the claim was due under 37 CFR 1.78(a)(2)(ii) and the date the claim was filed was unintentional. The Director may require additional information where there is a question whether the delay was unintentional.

The petition does not comply with item (1).

The reference to add the above-noted prior-filed application in the first sentence of the specification on page one following the title is not acceptable as drafted since it improperly incorporates by reference prior-filed Application No. 10/854,699.

An incorporation by reference statement added after an application's filing date is not effective because no new matter can be added to an application after its filing date (*see* 35 U.S.C. 132(a)). If an incorporation by reference statement is included in an amendment to the specification to add a benefit claim under 35 U.S.C. 120 after the filing date of the application, the amendment would not be proper. When a benefit claim under 35 U.S.C. 120 is submitted after the filing of an application, the reference to the prior application cannot include an incorporation by reference statement of the prior application. See Dart Industries v. Banner, 636 F.2d 684, 207 USPQ 273 (C.A.D.C. 1980). *Note* MPEP 201.06(c) and 608.04(b).

If reconsideration of this decision is desired, a renewed petition under 37 CFR 1.78(a)(3) and a Supplemental Application Data Sheet or an amendment (complying with 37 CFR 1.121, 37 CFR 1.76 and 37 CFR 1.33(b))[1] to correct the above matters are required.

Further correspondence with respect to this matter should be addressed as follows:

By mail: Mail Stop PETITIONS
Commissioner for Patents
Post Office Box 1450
Alexandria, VA 22313-1450

By hand: Customer Service Window
Mail Stop Petitions
Randolph Building
401 Dulany Street
Alexandria, VA 22314

By fax: (571) 273-8300
ATTN: Office of Petitions

Correspondence may also be submitted via the Electronic Filing System of the USPTO.

Any questions concerning this matter may be directed to the undersigned at (571) 272-3211.

C. T. Donnell

Christina Tartera Donnell
Senior Petitions Attorney
Office of Petitions

---

[1] The Office notes that 37 CFR 1.33(b) requires that amendments and other papers, except for written assertions pursuant to 37 CFR 1.27(c)(2)(ii), filed in an application must be signed by an appropriate party. Therefore, a supplemental ADS or an amendment submitted after the filing of an application must be signed in accordance with 37 CFR 1.33(b).

UNITED STATES PATENT AND TRADEMARK OFFICE

Commissioner for Patents
United States Patent and Trademark Office
P.O. Box 1450
Alexandria, VA 22313-1450
www.uspto.gov

MORGAN LEWIS & BOCKIUS LLP (WA)
1111 PENNSYLVANIA AVENUE NW
WASHINGTON DC 20004

MAILED
OCT 13 2011
OFFICE OF PETITIONS

In re Application of
THOMPSON et al.
Application No. 12/978,834
Filed: 12/27/2010
Attorney Docket No. 061945-5017-03

: DECISION GRANTING PETITION
: UNDER 37 CFR 1.78(a)(3)

This is a decision on the renewed petition under 37 CFR 1.78(a)(3), filed October 6, 2011, to accept an unintentionally delayed claim under 35 U.S.C. 120 for the benefit of prior-filed nonprovisional Application No. 10/854,699 filed May 27, 2004, set forth in the concurrently filed amendment.

The renewed petition is **GRANTED.**

A petition for acceptance of an unintentionally delayed claim under 35 U.S.C. 120 for the benefit of prior-filed nonprovisional applications pursuant to 37 CFR 1.78(a)(3) is applicable to those applications filed on or after November 29, 2000. Further, the petition is appropriate only after the expiration of the period specified in 37 CFR 1.78(a)(2)(ii). In addition, the petition under 37 CFR 1.78(a)(3) must be accompanied by:

**(1)** the reference required by 35 U.S.C. 120 and 37 CFR 1.78(a)(2)(i) of the prior-filed application, unless previously submitted;
**(2)** the surcharge set forth in § 1.17(t); and
**(3)** a statement that the entire delay between the date the claim was due under 37 CFR 1.78(a)(2)(ii) and the date the claim was filed was unintentional. The Director may require additional information where there is a question whether the delay was unintentional.

All of the above requirements having been satisfied, the benefit claim under 35 U.S.C. 120 is accepted as being unintentionally delayed.

***The granting of the petition to accept the delayed benefit claim to the prior-filed application under 37 CFR 1.78(a)(3) should not be construed as meaning that this application is entitled to the benefit of the prior-filed application. In order for this application to be entitled to the benefit of the prior-filed application, all other requirements under 35 U.S.C. 120 and 37 CFR 1.78(a)(1) and (a)(2) must be met. Similarly, the fact that the corrected Filing Receipt accompanying this decision on petition includes the prior-filed application should not be construed as meaning that applicant is entitled to the claim for benefit of priority to the prior-filed application noted thereon. Accordingly, the examiner will, in due course, consider this benefit claim and determine whether the application is entitled to the benefit of the earlier filing date.***

A corrected Filing Receipt, which includes the benefit claim to the prior-filed nonprovisional application, accompanies this decision on petition.

This application is being forwarded to the Office of Patent Application Processing for further pre-examination processing. Thereafter, the matter will be referred to Technology Center Art Unit 1638 for consideration by the examiner of applicant's entitlement to claim benefit under 35 U.S.C. 120 to the prior-filed application.

Any inquiries concerning this decision may be directed to the undersigned at (571) 272-3211.

C. T. Donnell

Christina Tartera Donnell
Senior Petitions Attorney
Office of Petitions

**ATTACHMENT**: Corrected Filing Receipt

UNITED STATES PATENT AND TRADEMARK OFFICE

UNITED STATES DEPARTMENT OF COMMERCE
United States Patent and Trademark Office
Address: COMMISSIONER FOR PATENTS
P.O. Box 1450
Alexandria, Virginia 22313-1450
www.uspto.gov

| APPLICATION NUMBER | FILING or 371(c) DATE | GRP ART UNIT | FIL FEE REC'D | ATTY.DOCKET.NO | TOT CLAIMS | IND CLAIMS |
|---|---|---|---|---|---|---|
| 12/978,834 | 12/27/2010 | 1638 | 1090 | 061945-5017-03 | 16 | 1 |

**CONFIRMATION NO. 1957**

**CORRECTED FILING RECEIPT**

9629
MORGAN LEWIS & BOCKIUS LLP (WA)
1111 PENNSYLVANIA AVENUE NW
WASHINGTON, DC 20004

*OC000000050360927*

Date Mailed: 10/13/2011

Receipt is acknowledged of this non-provisional patent application. The application will be taken up for examination in due course. Applicant will be notified as to the results of the examination. Any correspondence concerning the application must include the following identification information: the U.S. APPLICATION NUMBER, FILING DATE, NAME OF APPLICANT, and TITLE OF INVENTION. Fees transmitted by check or draft are subject to collection. Please verify the accuracy of the data presented on this receipt. **If an error is noted on this Filing Receipt, please submit a written request for a Filing Receipt Correction. Please provide a copy of this Filing Receipt with the changes noted thereon. If you received a "Notice to File Missing Parts" for this application, please submit any corrections to this Filing Receipt with your reply to the Notice. When the USPTO processes the reply to the Notice, the USPTO will generate another Filing Receipt incorporating the requested corrections**

**Applicant(s)**

John E. Thompson, Waterloo, CANADA;
Tzann-Wei Wang, Waterloo, CANADA;
Dongen Lily Lu, Exton, PA;

**Power of Attorney:** The patent practitioners associated with Customer Number 23838

**Domestic Priority data as claimed by applicant**

This application is a CON of 11/206,810 08/19/2005 ABN
which is a CON of 10/854,699 05/27/2004 PAT 7,588,888
which is a CON of 09/725,019 11/29/2000 PAT 6,878,860
which is a CIP of 09/597,771 06/19/2000 PAT 6,538,182
which is a CIP of 09/348,675 07/06/1999 ABN

**Foreign Applications** (You may be eligible to benefit from the **Patent Prosecution Highway** program at the USPTO. Please see http://www.uspto.gov for more information.)

**If Required, Foreign Filing License Granted:** 04/20/2011

The country code and number of your priority application, to be used for filing abroad under the Paris Convention, is **US 12/978,834**

**Projected Publication Date:** To Be Determined - pending completion of Corrected Papers

**Non-Publication Request:** No

**Early Publication Request:** No

**Title**

DNA encoding a plant deoxyhypusine synthase, a plant eukaryotic initiation factor 5A, transgenic plants and a method for controlling senescence programmed and cell death in plants

**Preliminary Class**

800

## PROTECTING YOUR INVENTION OUTSIDE THE UNITED STATES

Since the rights granted by a U.S. patent extend only throughout the territory of the United States and have no effect in a foreign country, an inventor who wishes patent protection in another country must apply for a patent in a specific country or in regional patent offices. Applicants may wish to consider the filing of an international application under the Patent Cooperation Treaty (PCT). An international (PCT) application generally has the same effect as a regular national patent application in each PCT-member country. The PCT process **simplifies** the filing of patent applications on the same invention in member countries, but **does not result** in a grant of "an international patent" and does not eliminate the need of applicants to file additional documents and fees in countries where patent protection is desired.

Almost every country has its own patent law, and a person desiring a patent in a particular country must make an application for patent in that country in accordance with its particular laws. Since the laws of many countries differ in various respects from the patent law of the United States, applicants are advised to seek guidance from specific foreign countries to ensure that patent rights are not lost prematurely.

Applicants also are advised that in the case of inventions made in the United States, the Director of the USPTO must issue a license before applicants can apply for a patent in a foreign country. The filing of a U.S. patent application serves as a request for a foreign filing license. The application's filing receipt contains further information and guidance as to the status of applicant's license for foreign filing.

Applicants may wish to consult the USPTO booklet, "General Information Concerning Patents" (specifically, the section entitled "Treaties and Foreign Patents") for more information on timeframes and deadlines for filing foreign patent applications. The guide is available either by contacting the USPTO Contact Center at 800-786-9199, or it can be viewed on the USPTO website at http://www.uspto.gov/web/offices/pac/doc/general/index.html.

For information on preventing theft of your intellectual property (patents, trademarks and copyrights), you may wish to consult the U.S. Government website, http://www.stopfakes.gov. Part of a Department of Commerce initiative, this website includes self-help "toolkits" giving innovators guidance on how to protect intellectual property in specific countries such as China, Korea and Mexico. For questions regarding patent enforcement issues, applicants may call the U.S. Government hotline at 1-866-999-HALT (1-866-999-4158).

## LICENSE FOR FOREIGN FILING UNDER

## Title 35, United States Code, Section 184

## Title 37, Code of Federal Regulations, 5.11 & 5.15

**GRANTED**

The applicant has been granted a license under 35 U.S.C. 184, if the phrase "IF REQUIRED, FOREIGN FILING LICENSE GRANTED" followed by a date appears on this form. Such licenses are issued in all applications where

the conditions for issuance of a license have been met, regardless of whether or not a license may be required as set forth in 37 CFR 5.15. The scope and limitations of this license are set forth in 37 CFR 5.15(a) unless an earlier license has been issued under 37 CFR 5.15(b). The license is subject to revocation upon written notification. The date indicated is the effective date of the license, unless an earlier license of similar scope has been granted under 37 CFR 5.13 or 5.14.

This license is to be retained by the licensee and may be used at any time on or after the effective date thereof unless it is revoked. This license is automatically transferred to any related applications(s) filed under 37 CFR 1.53(d). This license is not retroactive.

The grant of a license does not in any way lessen the responsibility of a licensee for the security of the subject matter as imposed by any Government contract or the provisions of existing laws relating to espionage and the national security or the export of technical data. Licensees should apprise themselves of current regulations especially with respect to certain countries, of other agencies, particularly the Office of Defense Trade Controls, Department of State (with respect to Arms, Munitions and Implements of War (22 CFR 121-128)); the Bureau of Industry and Security, Department of Commerce (15 CFR parts 730-774); the Office of Foreign AssetsControl, Department of Treasury (31 CFR Parts 500+) and the Department of Energy.

**NOT GRANTED**

No license under 35 U.S.C. 184 has been granted at this time, if the phrase "IF REQUIRED, FOREIGN FILING LICENSE GRANTED" DOES NOT appear on this form. Applicant may still petition for a license under 37 CFR 5.12, if a license is desired before the expiration of 6 months from the filing date of the application. If 6 months has lapsed from the filing date of this application and the licensee has not received any indication of a secrecy order under 35 U.S.C. 181, the licensee may foreign file the application pursuant to 37 CFR 5.15(b).

UNITED STATES PATENT AND TRADEMARK OFFICE

Commissioner for Patents
United States Patent and Trademark Office
P.O. Box 1450
Alexandria, VA 22313-1450
www.uspto.gov

MORGAN LEWIS & BOCKIUS LLP (WA)
1111 PENNSYLVANIA AVENUE NW
WASHINGTON DC 20004

MAILED
OCT 25 2011
OFFICE OF PETITIONS

| | | |
|---|---|---|
| In re Application of<br>THOMPSON et al.<br>Application No. 12/978,834<br>Filed: 12/27/2010<br>Attorney Docket No. 061945-5017-03<br>Title: DNA ENCODING A PLANT DEOXYHYPUSINE SYNTHASE, A PLANT EUKARYOTIC INITIATION FACTOR 5A, TRANSGENIC PLANTS AND A METHOD FOR CONTROLLING SENESCENCE PROGRAMMED AND CELL DEATH IN PLANTS | : | ON PETITION |

This is in response to the renewed petition under 37 CFR 1.47(a) filed August 3, 2011.

In accordance with 37 CFR 1.63(d), petitioner submitted a copy of the executed declaration filed in Application No. 10/854,699. The present application is a continuation of Application No. 11/206,810 filed August 19, 2005, which is a continuation of Application No. 10/854,699 filed May 27, 2004, now U.S. Patent 7,588,888, which is a continuation of Application No. 09/725,019 filed November 29, 2000, now U.S. Patent 6,878,860, which is a continuation-in-part of Application No. 09/597,771 filed June 19, 2000, now U.S. Patent 6,538,182, which is a continuation-in-part of Application No. 09/348,675 filed on July 6, 1999, now abandoned. Additionally, petitioner submitted a copy of the original petition under 37 CFR 1.47(a) filed January 18, 2005, and a copy of the decision mailed on March 24, 2005, granting the petition under 37 CFR 1.47(a) in prior Application No. 10/854,699.

As § 1.47(a) status was granted in the prior application, this application is hereby accorded § 1.47(a) status.

The present renewed petition is **dismissed as involving a moot issue** because a petition is unnecessary to accord § 1.47(a) status in this application.

As provided in 37 CFR 1.47(c), the Office is dispensing with the notice provision in this application because the Office provided notice to the non-signing inventor regarding the § 1.47(a) status in the prior application.

This matter is being referred to the Office of Patent Application Processing.

Telephone inquiries related to this decision may be directed to the undersigned at (571) 272-3211.

C. T. Donnell

Christina Tartera Donnell
Senior Petitions Attorney
Office of Petitions

**Doc Code: PET.GREEN**
**Document Description: Petition for Green Tech Pilot**

PTO/SB/420 (11-10)
Approved for use through 01/31/2011. OMB 0651-0062
U.S. Patent and Trademark Office; U. S. DEPARTMENT OF COMMERCE
Under the Paperwork Reduction Act of 1995, no persons are required to respond to a collection of information unless it displays a valid OMB control number.

# PETITION TO MAKE SPECIAL UNDER THE GREEN TECHNOLOGY PILOT PROGRAM

| | | |
|---|---|---|
| Attorney Docket Number: 70257.180 | Application Number (if known): 12/978,842 | Filing date: 12/27/2010 |
| First Named Inventor: Vahid S. Moshtagh | | |
| Title: Cross Flow CVD Reactor | | |

**APPLICANT HEREBY REQUESTS TO PARTICIPATE IN THE GREEN TECHNOLOGY PILOT PROGRAM FOR THE ABOVE-IDENTIFIED APPLICATION. See Instruction Sheet on page 2.**

This petition must be timely filed electronically using the USPTO electronic filing system, EFS-Web.

1. By filing this petition:

   **Applicant is requesting early publication: Applicant hereby requests early publication under 37 CFR 1.219 and the publication fee set forth in 37 CFR 1.18(d) accompanies this request.**

2. By filing this petition: applicant is agreeing to make an election without traverse in a telephonic interview and elect an invention that meets the eligibility requirements for the Green Technology Pilot Program, if the Office determines that the claims are not obviously directed to a single invention. See Instruction Sheet.

3. This request is accompanied by statements of special status for the eligibility requirement.

4. The application contains no more than three (3) independent claims and twenty (20) total claims.

5. The application does not contain any multiple dependent claims.

6. Other attachments: _____

| | |
|---|---|
| Signature | Date 12/27/2010 |
| Name (Print/Typed) Norman E. Carte | Registration Number 30,455 |

***Note:*** *Signatures of all the inventors or assignees of record of the entire interest or their representative(s) are required in accordance with 37 CFR 1.33 and 11.18. Please see 37 CFR 1.4(d) for the form of the signature. If necessary, submit multiple forms for more than one signature see below*.*

[X] *Total of 1 forms are submitted.

The information is required to obtain or retain a benefit by the public which is to file (and by the USPTO to process) an application. Confidentiality is governed by 35 U.S.C. 122 and 37 CFR 1.11 and 1.14. This collection is estimated to take 12 hours to complete, including gathering, preparing, and submitting the completed application form to the USPTO. Time will vary depending upon the individual case. Any comments on the amount of time you require to complete this form and/or suggestions for reducing this burden, should be sent to the Chief Information Officer, U.S. Patent and Trademark Office, U.S. Department of Commerce, P.O. Box 1450, Alexandria, VA 22313-1450. DO NOT SEND FEES OR COMPLETED FORMS TO THIS ADDRESS. **SEND TO: Commissioner for Patents, P.O. Box 1450, Alexandria, VA 22313-1450.**

*If you need assistance in completing the form, call 1-800-PTO-9199 and select option 2.*

UNITED STATES PATENT AND TRADEMARK OFFICE

UNITED STATES DEPARTMENT OF COMMERCE
United States Patent and Trademark Office
Address: COMMISSIONER FOR PATENTS
P.O. Box 1450
Alexandria, Virginia 22313-1450
www.uspto.gov

| APPLICATION NO. | FILING DATE | FIRST NAMED INVENTOR | ATTORNEY DOCKET NO. | CONFIRMATION NO. |
|---|---|---|---|---|
| 12/978,842 | 12/27/2010 | Vahid S. Moshtagh | 70257.180 | 1968 |

27683 7590 01/18/2011
HAYNES AND BOONE, LLP
IP Section
2323 Victory Avenue
Suite 700
Dallas, TX 75219

| EXAMINER | |
|---|---|
| ART UNIT | PAPER NUMBER |
| 1712 | |

| MAIL DATE | DELIVERY MODE |
|---|---|
| 01/18/2011 | PAPER |

**Please find below and/or attached an Office communication concerning this application or proceeding.**

The time period for reply, if any, is set in the attached communication.

UNITED STATES PATENT AND TRADEMARK OFFICE

Commissioner for Patents
United States Patent and Trademark Office
P.O. Box 1450
Alexandria, VA 22313-1450
www.uspto.gov

1/18/11

HAYNES AND BOONE, LLP
IP Section
2323 Victory Avenue
Suite 700
Dallas TX 75219

| | | |
|---|---|---|
| In re Application of | : | |
| Vahid S. Moshtagh et al. | : | DECISION ON PETITION |
| Application No. 12/978,842. | : | TO MAKE SPECIAL UNDER |
| Filed: December 27, 2010 | : | THE GREEN TECHNOLOGY |
| Attorney Docket No. 70257.180 | : | PILOT PROGRAM |

This is a decision on the petition under 37 CFR 1.102, filed December 27, 2010, to make the above-identified application special under the pilot program for applications pertaining to Green Technologies as set forth in 74 Federal Register Notice 64666 (December 8, 2009) and amended by 75 Federal Register Notice 28554 (May 21, 2010) and 75 Federal Register Notice 69049 (November 10, 2010).

The petition is **GRANTED**.

A grantable petition to make an application special under 37 CFR 1.102 and the pilot program as set forth in 74 FR 64666 must be directed to a nonprovisional application filed under 35 USC 111(a) or be a national stage entry under 35 USC 371, exclusive of any reissue applications.

In order to qualify for special status, the following requirements must be met. 1) The application must have no more than 3 independent claims and no more than 20 total claims. 2) The application must not contain any multiple dependent claims. 3) The petition must state the basis for seeking special status, i.e., the claimed invention either: A) materially enhances the quality of the environment or B) materially contributes to: i) the discovery or development of renewable energy resources, ii) the more efficient utilization and conservation of energy resources, or iii) greenhouse gas emission reduction. 4) If the disclosure is not clear on its face that the claimed invention materially contributes under category (A) or (B), the petition must be accompanied by a statement by the applicant, assignee, or an attorney/agent registered to practice before the Office explaining how the materiality standard is met. 5) A statement that applicant will agree to make an election without traverse in a telephonic interview if a restriction requirement is made by the examiner. 6) The petition to make special must be filed electronically. 7) The petition must be filed at least one day prior to the date that a first Office Action appears in the Patent Application Information Retrieval (PAIR) system. 8) The petition must be accompanied by a request for early publication in compliance with 37 CFR 1.219 and include the publication fee as set forth in 37 CFR 1.18(d).

The requirement for a fee for consideration of the petition to make special for applications pertaining to Green Technologies has been waived.

The instant petition complies with items 1 – 8 above. Accordingly, the above-identified application has been accorded "special" status.

Telephone inquires concerning this decision should be directed to Blaine Copenheaver at 571-272-1156.

The application is being forwarded to the examiner for action on the merits commensurate with this decision.

/Blaine Copenheaver/

Blaine Copenheaver
Quality Assurance Specialist
Technology Center 1700

**Doc Code: PET.GREEN**
**Document Description: Petition for Green Tech Pilot**

PTO/SB/420 (11-10)
Approved for use through 01/31/2011. OMB 0651-0062
U.S. Patent and Trademark Office; U. S. DEPARTMENT OF COMMERCE
Under the Paperwork Reduction Act of 1995, no persons are required to respond to a collection of information unless it displays a valid OMB control number.

# PETITION TO MAKE SPECIAL UNDER THE GREEN TECHNOLOGY PILOT PROGRAM

| | | |
|---|---|---|
| Attorney Docket Number: 70257.179 | Application Number (if known): 12/978,874 | Filing date: 12/27/2010 |
| First Named Inventor: Tao Xu | | |
| Title: Surface-Textured Encapsulations For Use With Light Emitting Diodes | | |

**APPLICANT HEREBY REQUESTS TO PARTICIPATE IN THE GREEN TECHNOLOGY PILOT PROGRAM FOR THE ABOVE-IDENTIFIED APPLICATION. See Instruction Sheet on page 2.**

This petition must be timely filed electronically using the USPTO electronic filing system, EFS-Web.

1. By filing this petition:

   **Applicant is requesting early publication: Applicant hereby requests early publication under 37 CFR 1.219 and the publication fee set forth in 37 CFR 1.18(d) accompanies this request.**

2. By filing this petition: applicant is agreeing to make an election without traverse in a telephonic interview and elect an invention that meets the eligibility requirements for the Green Technology Pilot Program, if the Office determines that the claims are not obviously directed to a single invention. See Instruction Sheet.

3. This request is accompanied by statements of special status for the eligibility requirement.

4. The application contains no more than three (3) independent claims and twenty (20) total claims.

5. The application does not contain any multiple dependent claims.

6. Other attachments: _____

| | |
|---|---|
| Signature | Date 12/27/2010 |
| Name (Print/Typed) Norman E. Carte | Registration Number 30,455 |

***Note:*** *Signatures of all the inventors or assignees of record of the entire interest or their representative(s) are required in accordance with 37 CFR 1.33 and 11.18. Please see 37 CFR 1.4(d) for the form of the signature. If necessary, submit multiple forms for more than one signature see below*.*

☒ *Total of 1 forms are submitted.

The information is required to obtain or retain a benefit by the public which is to file (and by the USPTO to process) an application. Confidentiality is governed by 35 U.S.C. 122 and 37 CFR 1.11 and 1.14. This collection is estimated to take 12 hours to complete, including gathering, preparing, and submitting the completed application form to the USPTO. Time will vary depending upon the individual case. Any comments on the amount of time you require to complete this form and/or suggestions for reducing this burden, should be sent to the Chief Information Officer, U.S. Patent and Trademark Office, U.S. Department of Commerce, P.O. Box 1450, Alexandria, VA 22313-1450. DO NOT SEND FEES OR COMPLETED FORMS TO THIS ADDRESS. **SEND TO: Commissioner for Patents, P.O. Box 1450, Alexandria, VA 22313-1450.**

*If you need assistance in completing the form, call 1-800-PTO-9199 and select option 2.*

UNITED STATES PATENT AND TRADEMARK OFFICE

**UNITED STATES DEPARTMENT OF COMMERCE**
**United States Patent and Trademark Office**
Address: COMMISSIONER FOR PATENTS
P.O. Box 1450
Alexandria, Virginia 22313-1450
www.uspto.gov

| APPLICATION NO. | FILING DATE | FIRST NAMED INVENTOR | ATTORNEY DOCKET NO. | CONFIRMATION NO. |
|---|---|---|---|---|
| 12/978,874 | 12/27/2010 | Tao Xu | 70257.179 | 2014 |

27683 7590 01/18/2011
HAYNES AND BOONE, LLP
IP Section
2323 Victory Avenue
Suite 700
Dallas, TX 75219

| EXAMINER |
|---|

| ART UNIT | PAPER NUMBER |
|---|---|
| 2811 | |

| MAIL DATE | DELIVERY MODE |
|---|---|
| 01/18/2011 | PAPER |

**Please find below and/or attached an Office communication concerning this application or proceeding.**

The time period for reply, if any, is set in the attached communication.

UNITED STATES PATENT AND TRADEMARK OFFICE

Commissioner for Patents
United States Patent and Trademark Office
P.O. Box 1450
Alexandria, VA 22313-1450
www.uspto.gov

HAYNES AND BOONE, LLP
IP Section
2323 Victory Avenue
Suite 700
Dallas TX 75219

| | | |
|---|---|---|
| In re Application of | : | |
| Tao XU | : | DECISION ON PETITION |
| Application No. 12/978,874 | : | TO MAKE SPECIAL UNDER |
| Filed: December 27, 2010 | : | THE GREEN TECHNOLOGY |
| Attorney Docket No. 70257.179 | : | PILOT PROGRAM |

This is a decision on the petition under 37 CFR 1.102, filed on December 27, 2010, to make the above-identified application special under the pilot program for applications pertaining to Green Technologies as set forth 74 Federal Register Notice 64666 (December 8, 2009) and amended by 75 Federal Register Notice 28554 (May 21, 2010) and 75 Federal Register Notice 69049 (November 10, 2010).

The petition is **GRANTED**.

A grantable petition to make an application special under 37 CFR 1.102 and the pilot program as set forth in 74 FR 64666 must be directed to a nonprovisional application filed under 35 USC 111(a) or be a national stage entry under 35 USC 371, exclusive of any reissue applications.

In order to qualify for special status, the following requirements must be met. 1) The application must have no more than 3 independent claims and no more than 20 total claims. 2) The application must not contain any multiple dependent claims. 3) The petition must state the basis for seeking special status, i.e., the claimed invention either: A) materially enhances the quality of the environment or B) materially contributes to: i) the discovery or development of renewable energy resources, ii) the more efficient utilization and conservation of energy resources, or iii) greenhouse gas emission reduction. 4) If the disclosure is not clear on its face that the claimed invention materially contributes under category (A) or (B), the petition must be accompanied by a statement by the applicant, assignee, or an attorney/agent registered to practice before the Office explaining how the materiality standard is met. 5) A statement that applicant will agree to make an election without traverse in a telephonic interview if a restriction requirement is made by the examiner. 6) The petition to make special must be filed electronically. 7) The petition must be filed at least one day prior to the date that a first Office Action appears in the Patent Application Information Retrieval (PAIR) system. 8) The petition must be accompanied by a request for early publication in compliance with 37 CFR 1.219 and include the publication fee as set forth in 37 CFR 1.18(d).

The requirement for a fee for consideration of the petition to make special for applications pertaining to Green Technologies has been waived.

The instant petition complies with items 1 – 8 above. Accordingly, the above-identified application has been accorded "special" status.

Telephone inquires concerning this decision should be directed to Lee W. Young at 571-272-4549.

The application is being forwarded to the Technology Center Art Unit 2811 for action in its regular turn.

Lee W. Young
Quality Assurance Specialist
Technology Center 2800

**Doc Code: PET.GREEN**
**Document Description: Petition for Green Tech Pilot**

PTO/SB/420 (11-10)
Approved for use through 01/31/2011. OMB 0651-0062
U.S. Patent and Trademark Office; U. S. DEPARTMENT OF COMMERCE
Under the Paperwork Reduction Act of 1995, no persons are required to respond to a collection of information unless it displays a valid OMB control number.

# PETITION TO MAKE SPECIAL UNDER THE GREEN TECHNOLOGY PILOT PROGRAM

| | | |
|---|---|---|
| Attorney Docket Number: 70257.178 | Application Number (if known): 12/978,913 | Filing date: 12/27/2010 |
| First Named Inventor: Wei Shi | | |
| Title: Phospher Layer Arrangement For Use With Light Emitting Diodes | | |

**APPLICANT HEREBY REQUESTS TO PARTICIPATE IN THE GREEN TECHNOLOGY PILOT PROGRAM FOR THE ABOVE-IDENTIFIED APPLICATION. See Instruction Sheet on page 2.**

This petition must be timely filed electronically using the USPTO electronic filing system, EFS-Web.

1. By filing this petition:

   **Applicant is requesting early publication: Applicant hereby requests early publication under 37 CFR 1.219 and the publication fee set forth in 37 CFR 1.18(d) accompanies this request.**

2. By filing this petition: applicant is agreeing to make an election without traverse in a telephonic interview and elect an invention that meets the eligibility requirements for the Green Technology Pilot Program, if the Office determines that the claims are not obviously directed to a single invention. See Instruction Sheet.

3. This request is accompanied by statements of special status for the eligibility requirement.

4. The application contains no more than three (3) independent claims and twenty (20) total claims.

5. The application does not contain any multiple dependent claims.

6. Other attachments: _____

| | |
|---|---|
| Signature | Date 12/27/2010 |
| Name (Print/Typed) Norman E. Carte | Registration Number 30,455 |

***Note:*** *Signatures of all the inventors or assignees of record of the entire interest or their representative(s) are required in accordance with 37 CFR 1.33 and 11.18. Please see 37 CFR 1.4(d) for the form of the signature. If necessary, submit multiple forms for more than one signature see below*.*

[X] *Total of 1 forms are submitted.

The information is required to obtain or retain a benefit by the public which is to file (and by the USPTO to process) an application. Confidentiality is governed by 35 U.S.C. 122 and 37 CFR 1.11 and 1.14. This collection is estimated to take 12 hours to complete, including gathering, preparing, and submitting the completed application form to the USPTO. Time will vary depending upon the individual case. Any comments on the amount of time you require to complete this form and/or suggestions for reducing this burden, should be sent to the Chief Information Officer, U.S. Patent and Trademark Office, U.S. Department of Commerce, P.O. Box 1450, Alexandria, VA 22313-1450. DO NOT SEND FEES OR COMPLETED FORMS TO THIS ADDRESS. **SEND TO: Commissioner for Patents, P.O. Box 1450, Alexandria, VA 22313-1450.**

*If you need assistance in completing the form, call 1-800-PTO-9199 and select option 2.*

UNITED STATES PATENT AND TRADEMARK OFFICE

UNITED STATES DEPARTMENT OF COMMERCE
United States Patent and Trademark Office
Address: COMMISSIONER FOR PATENTS
P.O. Box 1450
Alexandria, Virginia 22313-1450
www.uspto.gov

| APPLICATION NO. | FILING DATE | FIRST NAMED INVENTOR | ATTORNEY DOCKET NO. | CONFIRMATION NO. |
|---|---|---|---|---|
| 12/978,913 | 12/27/2010 | Wei Shi | 70257.178 | 2077 |

27683 7590 01/18/2011
HAYNES AND BOONE, LLP
IP Section
2323 Victory Avenue
Suite 700
Dallas, TX 75219

| EXAMINER |
|---|

| ART UNIT | PAPER NUMBER |
|---|---|
| 2879 | |

| MAIL DATE | DELIVERY MODE |
|---|---|
| 01/18/2011 | PAPER |

**Please find below and/or attached an Office communication concerning this application or proceeding.**

The time period for reply, if any, is set in the attached communication.

UNITED STATES PATENT AND TRADEMARK OFFICE

Commissioner for Patents
United States Patent and Trademark Office
P.O. Box 1450
Alexandria, VA 22313-1450
www.uspto.gov

HAYNES AND BOONE, LLP
IP Section
2323 Victory Avenue
Suite 700
Dallas TX 75219

| | | |
|---|---|---|
| In re Application of | : | |
| Wei SHI | : | DECISION ON PETITION |
| Application No. 12/978,913 | : | TO MAKE SPECIAL UNDER |
| Filed: December 27, 2010 | : | THE GREEN TECHNOLOGY |
| Attorney Docket No. 70257.178 | : | PILOT PROGRAM |

This is a decision on the petition under 37 CFR 1.102, filed on December 27, 2010, to make the above-identified application special under the pilot program for applications pertaining to Green Technologies as set forth 74 Federal Register Notice 64666 (December 8, 2009) and amended by 75 Federal Register Notice 28554 (May 21, 2010) and 75 Federal Register Notice 69049 (November 10, 2010).

The petition is **GRANTED**.

A grantable petition to make an application special under 37 CFR 1.102 and the pilot program as set forth in 74 FR 64666 must be directed to a nonprovisional application filed under 35 USC 111(a) or be a national stage entry under 35 USC 371, exclusive of any reissue applications.

In order to qualify for special status, the following requirements must be met. 1) The application must have no more than 3 independent claims and no more than 20 total claims. 2) The application must not contain any multiple dependent claims. 3) The petition must state the basis for seeking special status, i.e., the claimed invention either: A) materially enhances the quality of the environment or B) materially contributes to: i) the discovery or development of renewable energy resources, ii) the more efficient utilization and conservation of energy resources, or iii) greenhouse gas emission reduction. 4) If the disclosure is not clear on its face that the claimed invention materially contributes under category (A) or (B), the petition must be accompanied by a statement by the applicant, assignee, or an attorney/agent registered to practice before the Office explaining how the materiality standard is met. 5) A statement that applicant will agree to make an election without traverse in a telephonic interview if a restriction requirement is made by the examiner. 6) The petition to make special must be filed electronically. 7) The petition must be filed at least one day prior to the date that a first Office Action appears in the Patent Application Information Retrieval (PAIR) system. 8) The petition must be accompanied by a request for early publication in compliance with 37 CFR 1.219 and include the publication fee as set forth in 37 CFR 1.18(d).

The requirement for a fee for consideration of the petition to make special for applications pertaining to Green Technologies has been waived.

The instant petition complies with items 1 – 8 above. Accordingly, the above-identified application has been accorded "special" status.

Telephone inquires concerning this decision should be directed to Lee W. Young at 571-272-4549.

The application is being forwarded to the Technology Center Art Unit 2879 for action in its regular turn.

Lee W. Young
Quality Assurance Specialist
Technology Center 2800

UNITED STATES PATENT AND TRADEMARK OFFICE

Commissioner for Patents
United States Patent and Trademark Office
P.O. Box 1450
Alexandria, VA 22313-1450
www.uspto.gov

Krieg DeVault LLP
One Indiana Square
Suite 2800
Indianapolis IN 46204

**MAILED**

SEP 06 2011

**OFFICE OF PETITIONS**

| | | |
|---|---|---|
| In re Application of | : | |
| Brian Paul King | : | |
| Application No. 12/978971 | : | DECISION DISMISSING |
| Filing or 371(c) Date: 12/27/2010 | : | PETITION UNDER |
| Title of Invention: | : | 37 CFR 1.47(b) |
| GAS TURBINE ENGINE VANES | : | |

This is in response to the Petition Under 37 CFR § 1.47(b), filed August 11, 2011, to allow a person to whom an inventor has assigned or agreed in writing to assign the invention, or who otherwise shows sufficient proprietary interest in the matter justifying such action, to make application on behalf of and as agent for all inventors. The petition is properly treated under 37 CFR 1.47(b).

The petition is **dismissed**.

Rule 47 applicant is given TWO (2) MONTHS from the mailing date of this decision to reply, correcting the below-noted deficiencies. Any reply should be entitled "Request for Reconsideration of Petition Under 37 CFR 1.47(b)", and should only address the deficiencies noted below, except that the reply may include an oath or declaration executed by the non-signing inventor(s). Failure to respond will result in abandonment of the application. Any extensions of time will be governed by 37 CFR 1.136(a).

Background

The above-identified application was filed December 27, 2010, without an executed oath or declaration. In response, this Office mailed a Notice to File Missing Parts of Nonprovisional Application ("Notice") on February 11, 2011, requiring, *inter alia*, a fully executed oath or declaration.

The present petition

In response to the Notice, Applicant files the present petition and an oath/declaration executed by Mr. Mr. John H. Allie, who states that he is acting on behalf of and at the direction of the putative owner of the present application, Rolls Royce North American Technologies, Inc. Petitioner provides that the nonsigning inventor had an obligation to assign his interest to Rolls

Royce North American Technologies, Inc., based upon his employment at Rolls Royce North American Technologies, Inc. No copy of an employment agreement or an assignment has been filed with the present petition.

Applicable Law, rules and/or MPEP

A grantable petition under 37 CFR 1.47(b) requires: (1) proof that the non-signing inventor cannot be reached or refuses to sign the oath or declaration after having been presented with the application papers (specification, claims and drawings); (2) an acceptable oath or declaration in compliance with 35 U.S.C. §§ 115 and 116; (3) the petition fee; (4) a statement of the last known address of the non-signing inventor(s); (5) proof of proprietary interest; and (6) proof of irreparable harm. Applicant lacks items (2), (5) and (6) as set forth above.

Analysis

As to item (2), the oath/declaration has been executed by Mr. Mr. John H. Allie, who states that he is acting on behalf of and at the direction of the putative owner of the present application, Rolls Royce North American Technologies, Inc.; however, the statement is insufficient to establish that Mr. Allie is authorized to act on behalf on Verizon.

Regarding Mr. O'Neil, the MPEP states the following:

> The 37 CFR 1.47(b) applicant must make the oath required by 37 CFR 1.63 and 1.64 or 1.175. Where a corporation is the 37 CFR 1.47(b) applicant, an officer (President, Vice-President, Secretary, Treasurer, or Chief Executive Officer) thereof should normally sign the necessary oath or declaration. A corporation may authorize any person, including an attorney or agent registered to practice before the U.S. Patent and Trademark Office, to sign the application oath or declaration on its behalf. Where an oath or declaration is signed by a registered attorney or agent on behalf of a corporation, either proof of the attorney's or agent's authority in the form of a statement signed by an appropriate corporate officer must be submitted, or the attorney or agent may simply state that he or she is authorized to sign on behalf of the corporation. Where the oath or declaration is being signed on behalf of an assignee, see MPEP § 324. An inventor may not authorize another individual to act as his or her agent to sign the application oath or declaration on his or her behalf. Staeger v. Commissioner, 189 USPQ 272 (D.D.C. 1976), In re Striker, 182 USPQ 507 (Comm'r Pat. 1973). Where an application is executed by one other than the inventor, the declaration required by 37 CFR 1.63 must state the full name, residence, post office address, and citizenship of the nonsigning inventor. Also, the title or position of the person signing must be stated if signing on behalf of a corporation under 37 CFR 1.47(b).

Here, Mr. John H. Allie states that he is acting on behalf of and at the direction of the putative owner of the present application, Rolls Royce North American Technologies, Inc., however,

what is required is a statement that Mr. Allie is authorized to act on behalf of Rolls Royce North American Technologies, Inc.

As to item (5), Applicant failed to show or provide proof that Rolls Royce North American Technologies, Inc, or anyone other than the inventor, has sufficient proprietary interest in the subject matter to justify the filing of the application (*see* MPEP 409.03(f)). Acceptable proof would include a copy of an assignment of the invention by the inventor to the Rule 47(b) applicant; a copy of proof that the inventor has agreed in writing to assign the invention to the applicant, or a legal memorandum signed by an attorney familiar with the law of the jurisdiction stating that a court of competent jurisdiction would by the weight of authority in that jurisdiction award the title of the invention to the Rule 47(b) applicant.

> When an application is deposited pursuant to 37 CFR 1.47(b), the 37 CFR 1.47(b) applicant must prove that
> (A) the invention has been assigned to the applicant, or
> (B) the inventor has agreed in writing to assign the invention to the applicant, or
> (C) the applicant otherwise has sufficient proprietary interest in the subject matter to justify the filing of the application. (Emphasis supplied).
>
> If the application has been assigned, a copy of the assignment (in the English language) must be submitted. The assignment must clearly indicate that the invention described in the 37 CFR 1.47(b) application was assigned to the 37 CFR 1.47(b) applicant. A statement under 37 CFR 3.73(b) by the assignee must also be submitted (see MPEP § 324). An assignment of an application and any "reissue, division, or continuation of said application" does not itself establish an assignment of a continuation-in-part application. In re Gray, 115 USPQ 80 (Comm'r Pat. 1956). An assignment to a 37 CFR 1.47(b) applicant for the sole purpose of obtaining a filing date for a 37 CFR 1.47(b) application is not considered an assignment within the meaning of 35 U.S.C. 118 and 37 CFR 1.47(b).
>
> When an inventor has agreed in writing to assign an invention described in an application deposited pursuant to 37 CFR 1.47(b), a copy of that agreement should be submitted. If an agreement to assign is dependent on certain specified conditions being met, it must be established by a statement of facts by someone with first hand knowledge of the circumstances in which those conditions have been met. A typical agreement to assign is an employment agreement where an employee (nonsigning inventor) agrees to assign to his or her employer (37 CFR 1.47(b) applicant) all inventions made during employment. When such an agreement is relied on, it must be established by a statement of a person having firsthand knowledge of the facts that the invention was made by the employee while employed by the 37 CFR 1.47(b) applicant.
>
> If the invention has not been assigned, or if there is no written agreement to assign, the 37 CFR 1.47(b) applicant must demonstrate that he or she otherwise has a sufficient proprietary interest in the matter.

> A proprietary interest obtained other than by assignment or agreement to assign may be demonstrated by an appropriate legal memorandum to the effect that a court of competent jurisdiction (federal, state, or foreign) would by the weight of authority in that jurisdiction award title of the invention to the 37 CFR 1.47(b) applicant. The facts in support of any conclusion that a court would award title to the 37 CFR 1.47(b) applicant should be made of record by way of an affidavit or declaration of the person having firsthand knowledge of same. The legal memorandum should be prepared and signed by an attorney at law familiar with the law of the jurisdiction involved. A copy (in the English language) of a statute (if other than the United States statute) or a court decision (if other than a reported decision of a federal court or a decision reported in the United States Patents Quarterly) relied on to demonstrate a proprietary interest should be made of record. (Emphasis supplied).

MPEP 409.03(f).

Here, Applicant failed to show or provide proof that Rolls Royce North American Technologies, Inc, or anyone other than the inventor, has sufficient proprietary interest in the subject matter to justify the filing of the application. Absent a copy of an assignment, or a copy of proof that the inventor has agreed in writing to assign the invention to the applicant, Applicant must provide a legal memorandum signed by an attorney familiar with the law of the jurisdiction stating that a court of competent jurisdiction would by the weight of authority in that jurisdiction award the title of the invention to the Rule 47(b) applicant.

As to item (6), irreparable damage may be established by a showing (a statement) that a filing date is necessary to preserve the rights of the party or to prevent irreparable damage. See, MPEP 409.03(g).

The petition fee, $200.00, has been charged to petitioner's deposit account.

Conclusion

The petition is dismissed without prejudice. Applicant should file a request for reconsideration of petition addressing the deficiencies noted supra.

Further correspondence with respect to this matter should be addressed as follows:

By mail: Mail Stop PETITIONS
Director for Patents
PO Box 1450
Alexandria, VA 22313-1450

By FAX: (571) 273-8300
Attn: Office of Petitions

By hand: Customer Service Window
Randolph Building
401 Dulany Street
Alexandria, VA 22314

Telephone inquiries concerning this matter should be directed to the undersigned at (571) 272-3232.

/DLW/

Derek L. Woods
Attorney
Office of Petitions

UNITED STATES PATENT AND TRADEMARK OFFICE

Commissioner for Patents
United States Patent and Trademark Office
P.O. Box 1450
Alexandria, VA 22313-1450
www.uspto.gov

In re Application of
Shimon Mizrahi

Application No. 12978974

Filed: December 27,2010

Attorney Docket No. 1431-003

:DECISION ON PETITION TO MAKE SPECIAL
:UNDER 37 CFR 1.102(c)(1)

This is a decision on the electronic petition under 37 CFR 1.102 (c)(1), filed 15-FEB-2011 to make the above-identified application special based on applicant's age as set forth in MPEP § 708.02, Section IV.

The petition is **GRANTED**.

A grantable petition to make an application special under 37 CFR 1.102(c)(1), MPEP § 708.02, Section IV: Applicant's Age must include a statement by applicant or a registered practitioner having evidence that applicant is at least 65 years of age. No fee is required.

Accordingly, the above-identified application has been accorded "special" status and will be taken up for action by the examiner upon the completion of all pre-examination processing.

Telephone inquiries concerning this electronic decision should be directed to the Electronic Business Center at 866-217-9197.

All other inquiries concerning either the examination or status of the application should be directed to the Technology Center.

UNITED STATES PATENT AND TRADEMARK OFFICE

Commissioner for Patents
United States Patent and Trademark Office
P.O. Box 1450
Alexandria, VA 22313-1450
www.uspto.gov

DOBRUSIN & THENNISCH PC
29 W LAWRENCE ST
SUITE 210
PONTIAC MI 48342

MAILED
MAY 13 2011
OFFICE OF PETITIONS

In re
Shimon Mizrahi
Application No. 12/978,974
Filed: December 27, 2010
Attorney Docket No. 1431-003

DECISION

This is a decision on the fee deficiency submission under 37 CFR 1.28(c), filed April 11, 2011.

The fee deficiency submission under 37 CFR 1.28 of $628 is hereby accepted.

The change of status to large entity has been entered.

Telephone inquiries concerning this matter may be directed to the undersigned at (571) 272-3207.

Cliff Congo
Petitions Attorney
Office of Petitions

PTO/SB/20PCT-AU (01-11)
Approved for use through 01/31/2012. OMB 0651-0058
U.S. Patent and Trademark Office; U. S. DEPARTMENT OF COMMERCE
Under the Paperwork Reduction Act of 1995, no persons are required to respond to a collection of information unless it displays a valid OMB control number.

# REQUEST FOR PARTICIPATION IN THE PATENT COOPERATION TREATY - PATENT PROSECUTION HIGHWAY (PCT-PPH) PILOT PROGRAM BETWEEN THE IP AUSTRALIA (IPAU) AND THE USPTO

| | | | |
|---|---|---|---|
| Application No: | 12/978,974 | Filing date: | 12/27/2010 |
| First Named Inventor: | Mizrahi, Shimon | | |
| Title of the Invention: | PROCESSES FOR WELDING COMPOSITE MATERIALS AND ARTICLES THEREFROM | | |

**THIS REQUEST FOR PARTICIPATION IN THE PCT-PPH PILOT PROGRAM ALONG WITH THE REQUIRED DOCUMENTS MUST BE SUBMITTED VIA EFS-WEB. INFORMATION REGARDING EFS-WEB IS AVAILABLE AT HTTP://WWW.USPTO.GOV/EBC/EFS_HELP.HTML**

**APPLICANT HEREBY REQUESTS PARTICIPATION IN THE PCT-PPH PROGRAM AND PETITIONS TO MAKE THE ABOVE-IDENTIFIED APPLICATION SPECIAL UNDER THE PCT-PPH PROGRAM.**

The above-identified application is (1) a national stage entry of the corresponding PCT application, or (2) a national stage entry of another PCT application which claims priority to the corresponding PCT application, or (3) a national application that claims domestic/ foreign priority to the corresponding PCT application, or (4) a national application which forms the basis for the priority claim in the corresponding PCT application, or (5) a continuing application of a U.S. application that satisfies one of (1) to (4) above, or (6) a U.S. application that claims domestic benefit to a U.S. provisional application which forms the basis for the priority claim in the corresponding PCT application.

The corresponding PCT application number(s) is/are: PCT/US2010/062138

The international filing date of the corresponding PCT application(s) is/are: 27 DECEMBER 2010

**I. List of Required Documents:**

a. **A copy of the latest international work product (WO/ISA, WO/IPEA, or IPER) in the above-identified corresponding PCT application(s)**

☑ Is attached.

☐ Is not attached because the document is already in the U.S. application.

b. **A copy of all claims which were indicated as having novelty, inventive step and industrial applicability in the above-identified corresponding PCT application(s).**

☑ Is attached.

☐ Is not attached because the document is already in the U.S. application.

c. **English translations of the documents in a. and b. above are attached (if the documents are not in the English language). A statement that the English translation is accurate is attached for the document in b. above.**



This collection of information is required by 35 U.S.C. 119, 37 CFR 1.55, and 37 CFR 1.102(a). The information is required to obtain or retain a benefit by the public, which is to file (and by the USPTO to process) an application. Confidentiality is governed by 35 U.S.C. 122 and 37 CFR 1.11 and 1.14. This collection is estimated to take 2 hours to complete, including gathering, preparing, and submitting the completed application form to the USPTO. Time will vary depending upon the individual case. Any comments on the amount of time you require to complete this form and/or suggestions for reducing this burden should be sent to the Chief Information Officer, U.S. Patent and Trademark Office, U.S. Department of Commerce, P.O. Box 1450, Alexandria, VA 22313-1450. DO NOT SEND FEES OR COMPLETED FORMS TO THIS ADDRESS.

Approved for use through 01/31/2012. OMB 0651-0058
U.S.Patent and Trademark Office; U.S. DEPARTMENT OF COMMERCE
Under the Paperwork Reduction Act of 1995, no persons are required to respond to a collection of information unless it displays a valid OMB control number.

# REQUEST FOR PARTICIPATION IN THE PCT-PPH PILOT PROGRAM BETWEEN THE IPAU AND THE USPTO

(continued)

| | |
|---|---|
| Application No.: | 12/978,974 |
| First Named Inventor: | Mizrahi, Shimon |

d. **(1) An information disclosure statement listing the documents cited in the international work products (ISR, WO/ISA, WO/IPEA, IPER) of the corresponding PCT application.**

☐ Is attached

☑ Has already been filed in the above-identified U.S. application on May 16, 2011

**(2) Copies of all documents (except) for U.S. patents or U.S. patent application publications)**

☐ Are attached.

☑ Have already been filed in the above-identified U.S. application on May 16, 2011

**II. Claims Correspondence Table:**

| Claims in US Application | Patentable Claims in the corresponding PCT Application | Explanation regarding the correspondence |
|---|---|---|
| 1 | 1, 7 | US claim 1 includes all of the features of PCT claim 7, and claim 1 from which it depends |
| 2 | 2 | US claim 2 depends on claim 1 and thus requires all of the features of PCT claim 7 |
| 3 | 3 | US claim 3 depends on claim 1 and thus requires all of the features of PCT claim 7 |
| 4 | 4 | US claim 4 depends on claim 3 and thus requires all of the features of PCT claim 7 |
| 5 | 5 | US claim 5 depends on claim 3 and thus requires all of the features of PCT claim 7 |
| 6 | 6 | US claim 6 depends on claim 3 and thus requires all of the features of PCT claim 7 |
| 8 | 8 | US claim 8 depends on claim 1 and thus requires all of the features of PCT claim 7 |
| 9 | 9 | US claim 9 depends on claim 1 and thus requires all of the features of PCT claim 7 |
| 10 | 10 | US claim 10 depends on claim 9 and thus requires all of the features of PCT claim 7 |
| 11 | 11 | US claim 11 depends on claim 9 and thus requires all of the features of PCT claim 7 |
| 12 | 12 | US claim 12 depends on claim 3 and thus requires all of the features of PCT claim 7 |
| 13 | 13 | US claim 13 depends on claim 1 and thus requires all of the features of PCT claim 7 |
| 14 | 14 | US claim 14 depends on claim 13 and thus requires all of the features of PCT claim 7 |
| 15 | 15 | US claim 15 depends on claim 3 and thus requires all of the features of PCT claim 7 |
| 16 | 16 | US claim 16 depends on claim 3 and thus requires all of the features of PCT claim 7 |
| 17 | 17 | US claim 17 depends on claim 1 and thus requires all of the features of PCT claim 7 |
| 18 | 1, 18 | US Claim 18 includes all of the features of PCT claim 18 and claim 1 from which it depends |
| 19 | 19 | US claim 19 depends on claim 1 and thus requires all of the features of PCT claim 7 |
| 20 | 20 | US claim 20 depends on claim 1 and thus requires all of the features of PCT claim 7 |

**III. All the claims in the US application sufficiently correspond to the patentable claims in the corresponding PCT application.**

| | |
|---|---|
| Signature Terry M. Finerman | Date 17 May 2011 |
| Name (Print/Typed) Terry M. Finerman | Registration Number 62,461 |

The International Search Report for Patent Application PCT/US10/62138 lists the following claims as being novel, having an inventive step and having industrial applicability:

Claims 7 and 18 (of PCT/US10/62138)

---

Claim 7 (of PCT/US10/62138)

This claim depends on claim 1. Claims 1 and 7 of the PCT application are:

1. A process including a step of contacting a substrate material with a composite material, wherein the composite material includes a pair of spaced apart steel sheets and a core layer between the sheets;
   the volume of the core layer is about 25 volume % or more, based on the total volume of the composite material;
   the core layer includes a plurality of steel fibers arranged in one or more masses of fibers that extend the thickness of the core layer so that the core layer is in electrical communication with the steel sheets; and
   the steel fibers have a cross sectional area perpendicular to the length of the fibers from about $1 \times 10^{-5}$ $mm^2$ to about $2.5 \times 10^{-2}$ $mm^2$.

7. The process of any of claims 1 through 6, wherein the metallic fibers have a generally rectangular cross-section.

---

Claim 18 (of PCT/US10/62138)

This claim depends on claim 1. Claims 1 of the PCT application is listed above. Claim 18 of the PCT application is:

18. The process of any of claims 1 through 17, wherein the core layer includes from about 10 volume percent to about 30 volume percent metallic fibers, wherein the metallic fibers have a generally rectangular cross-sectional area in the direction perpendicular to the length of the fibers, and the cross-sectional area is about $8 \times 10^{-5}$ $mm^2$ or more, so that the static resistance of the composite material is about 1.5 mOhm or less, as measured between two electrodes each having a face diameter of about 3.8 mm using a load of about 2200 kN and a sample coupon width of about 25 mm and length of about 25 mm.

CLAIMS

1. A process including a step of contacting a substrate material with a composite material, wherein the composite material includes a pair of spaced apart steel sheets and a core layer between the sheets;
   the volume of the core layer is about 25 volume % or more, based on the total volume of the composite material;
   the core layer includes a plurality of steel fibers arranged in one or more masses of fibers that extend the thickness of the core layer so that the core layer is in electrical communication with the steel sheets; and
   the steel fibers have a cross sectional area perpendicular to the length of the fibers from about $1 \times 10^{-5}$ $mm^2$ to about $2.5 \times 10^{-2}$ $mm^2$.
2. The process of claim 1, wherein the process includes a step of applying a weld current from about 2.5 kA to about 25 kA to the substrate and the composite material to weld the substrate with the composite material so that a weld is achieved characterized by a weld button having an area of about 1 $mm^2$ or more.
3. The process of claim 1 or claim 2, wherein the concentration of metallic fibers is from about 10 percent by volume to about 30 percent by volume, based on the total volume of the core layer of the composite material.
4. The process of any of claims 1 through 3, wherein the composite material has a process window for welding the composite material to a 0.8 mm thick cold rolled steel, wherein the process window is characterized by a weld current range from about 1.2 to about 3.5 kA.
5. The process of any of claims 1 through 4, wherein the ratio of the static resistance of the composite material to the static resistance of the substrate is from about 2 to 30.
6. The process of any of claim 1 through 5, wherein the core layer includes a polymeric matrix that includes at least one polymer selected from the group consisting of a polyolefin, a polyamide, a polyester, a polyether, a polystyrene, a polymer including an acrylonitrile, a polymer including an acrylic acid, a polymer including an acrylate, a polyimide, a polycarbonate, an ionomer, and a copolymer including one or more of the above polymers.
7. The process of any of claims 1 through 6, wherein the metallic fibers have a generally rectangular cross-section.
8. The process of any of claims 1 through 7, wherein the thickness of the composite material is from about 0.4 to about 4 mm.
9. The process of any of claims 1 through 8, wherein the process includes a step of forming a weld using a multi-stage welding process including a step of applying a weld current to the

substrate and the composite material during a first weld stage and a step of applying a different weld current to the substrate and the composite material during a second weld stage, so that a weld between the composite material and the substrate is formed.

10. The process of claim 9, wherein the composite material has a thickness of about 1 mm or more.
11. The process of claim 9 or 10, wherein the weld formed by the multi-stage welding process is a weld located about 200 mm or less from another previously formed weld between the composite material and the substrate.
12. The process of any of claims 1 through 11, wherein the composite material has a stamped configuration.
13. The process of any of claims 1 through 12, wherein the composite material has a static resistance in the through thickness direction that is about 2 times or more greater than the static resistance of a monolithic material having the same thickness as the composite material and made from the same metal as the metallic sheet of the composite material.
14. The process of claim 13, wherein the weld current is sufficiently low and the weld time is sufficiently short so that metal expulsion does not occur during the step of resistance spot welding.
15. The process of any of claims 1 through 14, wherein the combined thickness of the pair of metallic sheets of the composite material is about 0.6 mm or less and is less than about 75% of the total thickness of the composite material.
16. The process of any of claims 1 through 15, wherein the process includes a step of resistance spot welding a weld stack including the substrate using a pair of electrodes including a first electrode for contacting a surface of the weld stack and a second electrode for contacting an opposing surface of the weld stack;

    wherein the first electrode has a surface area for contacting the weld stack that is the same or small than the surface area of the second electrode;

    wherein the step of resistance spot welding includes a step of passing a sufficient weld current between the first and second electrodes for a sufficient time so that the substrate and composite material have a weld that is characterized by a weld button size of 50% or more of the surface area of the first electrode.
17. The process of any of claims 1 through 16, wherein

    i) the volume of the core layer is about 25 volume percent or more based on the total volume of the composite material; and

    ii) the concentration of the metal fibers in the core layer is sufficiently low so that the weld

current range for welding the composite material to a substrate of cold rolled steel having the same total thickness as the composite material is greater than the weld current range for welding a monolithic steel sheet to a substrate of cold rolled steel, wherein the thickness of the monolithic steel sheet is about the same as the total thickness of the two steel sheets of the composite material.

18. The process of any of claims 1 through 17, wherein the core layer includes from about 10 volume percent to about 30 volume percent metallic fibers, wherein the metallic fibers have a generally rectangular cross-sectional area in the direction perpendicular to the length of the fibers, and the cross-sectional area is about $8 \times 10^{-5}$ $mm^2$ or more, so that the static resistance of the composite material is about 1.5 mOhm or less, as measured between two electrodes each having a face diameter of about 3.8 mm using a load of about 2200 kN and a sample coupon width of about 25 mm and length of about 25 mm.

19. A weld joint prepared according to the method of any of claims 1 through 18.

20. A welded article prepared according to any of claims 1 through 18, comprising

i) the composite material;

ii) the steel substrate; and

iii) a weld joint characterized by at least one of the following:

a) a weld bution size of about 2 $mm^2$ or more;

b) a tensile strength of about 1 kN or more; or

c) a weld free of metal expulsion.

# PATENT COOPERATION TREATY

From the INTERNATIONAL SEARCHING AUTHORITY

To:

Dobrusin & Thennisch PC
29 W. Lawrence Street, Suite 210
Pontiac, Michigan
48342
USA

**PCT**

NOTIFICATION OF TRANSMITTAL OF THE INTERNATIONAL SEARCH REPORT AND THE WRITTEN OPINION OF THE INTERNATIONAL SEARCHING AUTHORITY, OR THE DECLARATION

(PCT Rule 44.1)

Date of mailing *(day/month/year)* 18 MAR 2011

Applicant's or agent's file reference
1431-003WO

**FOR FURTHER ACTION** See paragraphs 1 and 4 below

International application No.
**PCT/US2010/062138**

International filing date
*(day/month/year)* 27 December 2010

Applicant
PRODUCTIVE RESEARCH LLC. et al.

1. [X] The applicant is hereby notified that the international search report and the written opinion of the International Searching Authority have been established and are transmitted herewith.

**Filing of amendments and statement under Article 19:**
The applicant is entitled, if he so wishes, to amend the claims of the international application (see Rule 46):

**When?** The time limit for filing such amendments is normally two months from the date of transmittal of the international search report.

**Where?** Directly to the International Bureau of WIPO, 34 chemin des Colombettes
1211 Geneva 20, Switzerland, Facsimile No.: +41 22 338 82 70

**For more detailed instructions**, see *PCT Applicant's Guide*, International Phase, paragraphs 9.004 – 9.011.

2. [ ] The applicant is hereby notified that no international search report will be established and that the declaration under Article 17(2)(a) to that effect and the written opinion of the International Searching Authority are transmitted herewith.

3. [ ] **With regard to any protest** against payment of (an) additional fee(s) under Rule 40.2, the applicant is notified that:

[ ] the protest together with the decision thereon has been transmitted to the International Bureau together with the applicant's request to forward the texts of both the protest and the decision thereon to the designated Offices.

[ ] no decision has been made yet on the protest; the applicant will be notified as soon as a decision is made.

4. **Reminders**

The applicant may submit comments on an *informal* basis on the written opinion of the International Searching Authority to the International Bureau. The International Bureau will send a copy of such comments to all designated Offices unless an international preliminary examination report has been or is to be established. Following the expiration of 30 months from the priority date, these comments will also be made available to the public.

Shortly after the expiration of **18 months** from the priority date, the international application will be published by the International Bureau. If the applicant wishes to avoid or postpone publication, a notice of withdrawal of the international application, or of the priority claim, must reach the International Bureau before the completion of the technical preparations for international publication (Rules 90*bis*.1 and 90*bis*.3).

Within **19 months** from the priority date, but only in respect of some designated Offices, a demand for international preliminary examination must be filed if the applicant wishes to postpone the entry into the national phase **until 30 months** from the priority date (in some Offices even later); otherwise, the applicant must, **within 20 months** from the priority date, perform the prescribed acts for entry into the national phase before those designated Offices.

In respect of other designated Offices, the time limit of **30 months** (or later) will apply even if no demand is filed within 19 months.

For details about the applicable time limits, Office by Office, see www.wipo.int/pct/en/texts/time_limits.html and the *PCT Applicant's Guide*, National Chapters.

Name and mailing address of the ISA/AU

AUSTRALIAN PATENT OFFICE
PO BOX 200, WODEN ACT 2606, AUSTRALIA
E-mail address: pct@ipaustralia.gov.au
Facsimile No. +61 2 6283 7999

Authorized officer
**GERARD ATKINSON**
AUSTRALIAN PATENT OFFICE
(ISO 9001 Quality Certified Service)
Telephone No. +61 2 6283 2089

Receiver
APR 04 2011
Dobrusin & Thennisch



*(See notes on accompanying sheet)*

# PATENT COOPERATION TREATY

# PCT

## INTERNATIONAL SEARCH REPORT

(PCT Article 18 and Rules 43 and 44)

| Applicant's or agent's file reference<br>1431-003WO | FOR FURTHER ACTION | see Form PCT/ISA/220<br>as well as, where applicable, item 5 below. |
|---|---|---|
| International application No.<br>PCT/US2010/062138 | International filing date *(day/month/year)*<br>27 December 2010 | (Earliest) Priority Date *(day/month/year)*<br>28 December 2009 |

Applicant

PRODUCTIVE RESEARCH LLC et al.

This international search report has been prepared by this International Searching Authority and is transmitted to the applicant according to Article 18. A copy is being transmitted to the International Bureau.

This international search report consists of a total of 3 sheets.

[ ] It is also accompanied by a copy of each prior art document cited in this report.

1. **Basis of the report**

a. With regard to the **language**, the international search was carried out on the basis of:

[X] The international application in the language in which it was filed.

[ ] A translation of the international application into , which is the language of a translation furnished for the purposes of international search (Rules 12.3(a) and 23.1(b)).

b. [ ] This international search report has been established taking into account the **rectification of an obvious mistake** authorized by or notified to this Authority under Rule 91 (Rule 43.6*bis*(a)).

c. [ ] With regard to any **nucleotide and/or amino acid sequence** disclosed in the international application, see Box No. I.

2. [ ] **Certain claims were found unsearchable** (See Box No. II).

3. [ ] **Unity of invention is lacking** (See Box No. III).

4. With regard to the **title**,

[X] the text is approved as submitted by the applicant.

[ ] the text has been established by this Authority to read as follows:

5. With regard to the **abstract**,

[X] the text is approved as submitted by the applicant.

[ ] the text has been established, according to Rule 38.2, by this Authority as it appears in Box No. IV. The applicant may, within one month from the date of mailing of this international search report, submit comments to this Authority.

6. With regard to the **drawings**,

a. the figure of the **drawings** to be published with the abstract is Figure No. 1

[X] as suggested by the applicant.

[ ] as selected by this Authority, because the applicant failed to suggest a figure.

[ ] as selected by this Authority, because this figure better characterizes the invention.

b. [ ] none of the figures is to be published with the abstract.

**INTERNATIONAL SEARCH REPORT**

International application No.
PCT/US2010/062138

A. CLASSIFICATION OF SUBJECT MATTER

Int. Cl.

*B23K 11/76* (2006.01) *B23K 103/16* (2006.01)
*B32B 15/08* (2006.01) *B23K 103/18* (2006.01)

According to International Patent Classification (IPC) or to both national classification and IPC

B. FIELDS SEARCHED

Minimum documentation searched (classification system followed by classification symbols)

Documentation searched other than minimum documentation to the extent that such documents are included in the fields searched

Electronic data base consulted during the international search (name of data base and, where practicable, search terms used)
DWPI, EPODOC: (IPC/ECLA: B23K11 or B32B15), welding, composite, steel, fibre, and similar terms

C. DOCUMENTS CONSIDERED TO BE RELEVANT

| Category* | Citation of document, with indication, where appropriate, of the relevant passages | Relevant to claim No. |
|---|---|---|
| | US 2003/0082335 A1 (CLYNE et al.) 01 May 2003 | |
| X | Paragraphs 0018, 0024, 0032; Claims 12, 16 | 1-6, 8-17, 19, 20 |
| A | | 7, 18 |
| | US 6387535 B1 (MANTEL) 14 May 2002 | |
| X | Column 2 lines 56-66, column 3 lines 2-3, column 4 lines 25-28; Claims 9, 10 | 1-6, 8-17, 19, 20 |
| A | | 7, 18 |
| | EP 1197323 A1 (MATERIAL SCIENCES CORPORATION) 17 April 2002 | |
| X | Paragraphs 0013, 0014, 0016, 0028; Table 1; Figure 14 | 1-6, 8-17, 19, 20 |
| A | | 7, 18 |
| | WO 2010/021899 A1 (PRODUCTIVE RESEARCH LLC.) 25 February 2010 | |
| P, X | Abstract; Paragraphs 0016, 0020, 0086; Figure 1B | 1-6, 8-17, 19, 20 |

☐ Further documents are listed in the continuation of Box C ☒ See patent family annex

* Special categories of cited documents:

"A" document defining the general state of the art which is not considered to be of particular relevance

"E" earlier application or patent but published on or after the international filing date

"L" document which may throw doubts on priority claim(s) or which is cited to establish the publication date of another citation or other special reason (as specified)

"O" document referring to an oral disclosure, use, exhibition or other means

"P" document published prior to the international filing date but later than the priority date claimed

"T" later document published after the international filing date or priority date and not in conflict with the application but cited to understand the principle or theory underlying the invention

"X" document of particular relevance; the claimed invention cannot be considered novel or cannot be considered to involve an inventive step when the document is taken alone

"Y" document of particular relevance; the claimed invention cannot be considered to involve an inventive step when the document is combined with one or more other such documents, such combination being obvious to a person skilled in the art

"&" document member of the same patent family

| Date of the actual completion of the international search | Date of mailing of the international search report |
|---|---|
| 11 March 2011 | 18 MAR 2011 |
| Name and mailing address of the ISA/AU | Authorized officer |
| AUSTRALIAN PATENT OFFICE<br>PO BOX 200, WODEN ACT 2606, AUSTRALIA<br>E-mail address: pct@ipaustralia.gov.au<br>Facsimile No. +61 2 6283 7999 | **GERARD ATKINSON**<br>AUSTRALIAN PATENT OFFICE<br>(ISO 9001 Quality Certified Service)<br>Telephone No.: +61 2 6283 2089 |

**INTERNATIONAL SEARCH REPORT**

Information on patent family members

International application No.

**PCT/US2010/062138**

This Annex lists the known "A" publication level patent family members relating to the patent documents cited in the above-mentioned international search report. The Australian Patent Office is in no way liable for these particulars which are merely given for the purpose of information.

| Patent Document Cited in Search Report | | Patent Family Member | | | | | |
|---|---|---|---|---|---|---|---|
| US | 2003082335 | CA | 2364364 | US | 6764772 | | |
| US | 6387535 | AU | 77331/98 | BR | 9802853 | CA | 2244510 |
| | | CN | 1212925 | EP | 0895852 | FR | 2767088 |
| | | ID | 20803 | JP | 11123790 | ZA | 9807004 |
| EP | 1197323 | CA | 2358433 | US | 6465110 | | |
| WO | 2010021899 | US | 2010040902 | | | | |

Due to data integration issues this family listing may not include 10 digit Australian applications filed since May 2001.

END OF ANNEX

# PATENT COOPERATION TREATY

From the:
INTERNATIONAL SEARCHING AUTHORITY

To:

Debrusin & Thennisch PC
29 W. Lawrence Street, Suite 210
Pontiac, Michigan
48342
USA

# PCT

WRITTEN OPINION OF THE
INTERNATIONAL SEARCHING AUTHORITY

(PCT Rule 43*bis*.1)

Date of mailing *(day/month/year)* 18 MAR 2011

Applicant's or agent's file reference
1431-003WO

**FOR FURTHER ACTION**
See paragraph 2 below

| International application No. | International filing date *(day/month/year)* | Priority date *(day/month/year)* |
|---|---|---|
| **PCT/US2010/062138** | 27 December 2010 | 28 December 2009 |

International Patent Classification (IPC) or both national classification and IPC
Int. Cl.

***B23K 11/16*** (2006.01) ***B23K 103/16*** (2006.01)
***B32B 15/08*** (2006.01) ***B23K 103/18*** (2006.01)

Applicant
PRODUCTIVE RESEARCH LLC. et al.

1. This opinion contains indications relating to the following items:

- [X] Box No. I — Basis of the opinion
- [X] Box No. II — Priority
- [ ] Box No. III — Non-establishment of opinion with regard to novelty, inventive step and industrial applicability
- [ ] Box No. IV — Lack of unity of invention
- [X] Box No. V — Reasoned statement under Rule 43*bis*.1(a)(i) with regard to novelty, inventive step and industrial applicability; citations and explanations supporting such statement
- [X] Box No. VI — Certain documents cited
- [ ] Box No. VII — Certain defects in the international application
- [ ] Box No. VIII — Certain observations on the international application

2. **FURTHER ACTION**

If a demand for international preliminary examination is made, this opinion will be considered to be a written opinion of the International Preliminary Examining Authority ("IPEA") except that this does not apply where the applicant chooses an Authority other than this one to be the IPEA and the chosen IPEA has notified the International Bureau under Rule 66.1*bis*(b) that written opinions of this International Searching Authority will not be so considered.

If this opinion is, as provided above, considered to be a written opinion of the IPEA, the applicant is invited to submit to the IPEA a written reply together, where appropriate, with amendments, before the expiration of 3 months from the date of mailing of Form PCT/ISA/220 or before the expiration of 22 months from the priority date, whichever expires later.

For further options, see Form PCT/ISA/220.

3. For further details, see notes to Form PCT/ISA/220.

| Name and mailing address of the ISA | Date of completion of this opinion | Authorized Officer |
|---|---|---|
| AUSTRALIAN PATENT OFFICE<br>PO BOX 200, WODEN ACT 2606, AUSTRALIA<br>E-mail address: pct@ipaustralia.gov.au<br>Facsimile No. +61 2 6283 7999 | 11 March 2011 | **GERARD ATKINSON**<br>AUSTRALIAN PATENT OFFICE<br>(ISO 9001 Quality Certified Service)<br>Telephone No. +61 2 6283 2089 |

WRITTEN OPINION OF THE
INTERNATIONAL SEARCHING AUTHORITY

International application No.

PCT/US2010/062138

**Box No. I** **Basis of this opinion**

1. With regard to the **language**, this opinion has been established on the basis of:

   [X] The international application in the language in which it was filed

   [ ] A translation of the international application into, , which is the language of a translation furnished for the purposes of international search (under Rules 12.3(a) and 23.1(b)).

2. [ ] This opinion has been established taking into account **the rectification of an obvious mistake** authorized by or notified to this Authority under Rule 91 (Rule 43*bis*.1(a))

3. With regard to any **nucleotide and/or amino acid sequence** disclosed in the international application, this opinion has been established on the basis of a sequence listing filed or furnished:

   a. (means)

   [ ] on paper

   [ ] in electronic form

   b. (time)

   [ ] in the international application as filed

   [ ] together with the international application in electronic form

   [ ] subsequently to this Authority for the purposes of search

4. [ ] In addition, in the case that more than one version or copy of a sequence listing has been filed or furnished, the required statements that the information in the subsequent or additional copies is identical to that in the application as filed or does not go beyond the application as filed, as appropriate, were furnished.

5. Additional comments:

**WRITTEN OPINION OF THE INTERNATIONAL SEARCHING AUTHORITY**

International application No.

PCT/US2010/062138

Box No. II Priority

1. [X] The validity of the priority claim has not been considered because the International Searching Authority does not have in its possession a copy of the earlier application whose priority has been claimed or, where required, a translation of that earlier application. This opinion has nevertheless been established on the assumption that the relevant date (Rules 43*bis*.1 and 64.1) is the claimed priority date.

2. [ ] This opinion has been established as if no priority had been claimed due to the fact that the priority claim has been found invalid (Rules 43*bis*.1 and 64.1). Thus for the purposes of this opinion, the international filing date indicated above is considered to be the relevant date.

3. Additional observations, if necessary:

WRITTEN OPINION OF THE
INTERNATIONAL SEARCHING AUTHORITY

International application No.
PCT/US2010/062138

**Box No. V** **Reasoned statement under Rule 43*bis*.1(a)(i) with regard to novelty, inventive step or industrial applicability; citations and explanations supporting such statement**

1. Statement

| | | | |
|---|---|---|---|
| Novelty (N) | Claims | **2, 4, 5, 7, 9-14, 16-18, 20** | **YES** |
| | Claims | **1, 3, 6, 8, 15, 19** | **NO** |
| Inventive step (IS) | Claims | **7, 18** | **YES** |
| | Claims | **1-6, 8-17, 19, 20** | **NO** |
| Industrial applicability (IA) | Claims | **1-20** | **YES** |
| | Claims | **NONE** | **NO** |

2. Citations and explanations:

The following documents identified in the International Search Report have been considered for the purposes of this report.

D1: US 2003/0082335 A1 (CLYNE et al.) 01 May 2003
D2: US 6387535 B1 (MANTEL) 14 May 2002
D3: EP 1197323 A1 (MATERIAL SCIENCES CORPORATION) 17 April 2002
D4: WO 2010/021899 A1 (PRODUCTIVE RESEARCH LLC) 25 February 2010

**NOVELTY (N)**

1.1 The invention defined in claims 1 and 19 is not novel when compared with the disclosure of any one of prior art documents D1-D3. Each of these documents are considered to disclose a process (and a weld joint prepared by such a process) including a step of contacting a substrate material with a composite material (D1, claim 16; D2, col. 4 ln. 25-28, "spot welding" is considered to inherently disclose contacting said material with a substrate; D3, para. 0028, fig. 14), wherein the composite material includes a pair of spaced apart steel sheets and a core layer between the sheets, the volume of said core layer being about 25 volume percent or more based on the total volume of the composite material (D1, para. 0032; D2, col. 2 ln. 56-66; D3, para. 0013-0014, Table 1), said core layer including a plurality of steel fibres arranged in one or more masses of fibres that extend the thickness of the core layer so that the core layer is in electrical communication with the steel sheets (D1, para. 0032; D2, col. 2 ln. 56-66; D3, para. 0013 and 0016), and wherein said steel fibres have a cross sectional area perpendicular to the length of the fibres from about $1 \times 10^{-5}$ $mm^2$ to about $2.5 \times 10^{-2}$ $mm^2$ (D1, para. 0018, a circular fibre of diameter 100μm has a cross sectional area within the claimed range; D2, col. 3 ln. 2-3, a circular fibre of diameter 60μm has a cross sectional area within the claimed range; D3, para. 0014, a circular fibre of diameter between 40-120μm has a cross sectional area within the claimed range).

1.2 The invention defined in claim 3 is not novel when compared with the disclosure of prior art document D1. With regard to the features added by this claim, document D1 discloses a concentration of metallic fibres between 10 percent and 30 percent by volume (D1, para. 0032, claim 12).

[Continued in Supplemental Box 1]

**Supplemental Box 1**

**In case the space in any of the preceding boxes is not sufficient.**

Continuation of Box V

1.3 The invention defined in claim 6 is not novel when compared with the disclosures of either of prior art documents D2 or D3. Regarding the features added by this claim, D2 and D3 each disclose a core layer including a polymeric matrix including a polymer selected from the group consisting of a polyolefin, a polyamide, a polyester, a polyether, a polystyrene, a polymer including an acrylonitrile, a polymer including an acrylic acid, a polymer including an acrylate, a polyimide, a polycarbonate, an ionomer, and a copolymer including one or more of the above polymers (D2, claims 9 and 10, D3, para. 0014).

1.4 The invention defined in claims 8 and 15 is not novel when compared with any one of the disclosures of prior art documents D1-D3. With regard to the features added by these claims, each of these documents disclose composite materials with thicknesses between 0.4 and 4mm, and wherein the combined thickness of the metallic sheets is about 0.6mm or less and less than 75% of the total thickness of the composite material (D1, para. 0032; D2, col. 2 ln. 56-66; D3, Table 1).

Therefore all of claims Therefore the subject matter of claims 1, 3, 6, 8, 15 and 19 is not new and does not meet the requirements of Article 33(2) of the PCT with regard to novelty.

1.5 The invention defined in claims 2, 4, 5, 7, 9-14, 16-18 and 20 meet the criteria set forth in PCT Article 33(2) for novelty. The cited prior art published before the priority date does not disclose the specific material properties as claimed in claims 5, 7, 11-14, 17, 18 and 20; or the specific welding process parameters as claimed in claims 2, 4, 9, 10 and 16.

## INVENTIVE STEP (IS)

2.1 The invention defined in claims 1, 3, 6, 8, 15 and 19 does not involve an inventive step for the reasons provided above regarding the novelty of the claims. An invention is considered to be necessarily obvious in light of its disclosure.

2.2 The invention defined in claims 5 and 13 does not involve an inventive step in view of any one of prior art documents D1-D3. The invention of these claims is distinguished from D1-D3 in that none of these documents explicitly disclose the static contact resistance values for the composite material or the substrate. However, it is considered that the features added by these claims relate to arrangements that could be achieved by trial and error when the general technical knowledge about the state of the art is used and therefore cannot contribute to providing a patentable inventive step. It is considered that one skilled in the art, in seeking to provide a composite material which replaces an ordinary metallic sheet, would be able to readily achieve the claimed parameters using the materials of any one of D1-D3 using routine experimentation and without recourse to invention.

2.3 The invention defined in claim 12 does not involve an inventive step in view of any one of prior art documents D1-D3. The invention of these claims is distinguished from D1-D3 in that none of these documents explicitly disclose that the composite material has a stamped configuration. However, it is considered that stamping processes for materials are well known in the art, and one skilled in the art would face no impediment in applying a stamping process to the composite materials disclosed in any one of documents D1-D3.

[Continued in Supplemental Box 2]

Supplemental Box 2

In case the space in any of the preceding boxes is not sufficient.

Continuation of Box V:

2.4 The invention defined in claim 17 does not involve an inventive step in view of any one of prior art documents D1-D3. Each of these documents disclose the features of claim 1, on which this claim depends. These documents further disclose that the volume of the core layer is about 25 volume percent or more based on the total volume of the composite material (D1, para. 0032; D2, col. 2 ln. 56-66; D3, para. 0013-0014, Table 1). The invention of claim 17 is distinguished from D1-D3 in that none of D1-D3 explicitly disclose that the concentration of the metal fibres in the core layer is sufficiently low such that the weld current range for welding the composite material to a substrate of cold rolled steel having the same total thickness as the composite material is greater than the weld current range for welding a monolithic steel sheet to a substrate of cold rolled steel, wherein the thickness of the monolithic steel sheet is about the same as the total thickness of the two steel sheets of the composite material.

However, it is considered that this difference relates to arrangements that could be achieved by trial and error when the general technical knowledge about the state of the art is used and therefore cannot contribute to providing a patentable inventive step. It is considered that one skilled in the art, in seeking to provide a weldable composite material, would be able to readily achieve the claimed parameters using the materials of any one of D1-D3 using routine experimentation and without recourse to invention.

2.5 The invention defined in claim 20 does not involve an inventive step in view of the disclosures of any one of prior art documents D1-D3. Each of these documents disclose the features of claim 1, on which this claim depends. These documents further disclose a welded article comprising a composite material, a steel substrate and a weld joint (D1, claim 16; D2, col. 4 ln. 25-28; D3, para. 0028, fig. 14).

The invention of claim 20 is distinguished from the disclosures of D1-D3 in that none of D1-D3 explicitly disclose a weld joint characterised by at least one of a weld button size of about $2mm^2$ or more, a tensile strength of about 1kN or more, or a weld free of metal expulsion. However, all these desired properties are considered to comprise matters of achievable by trial and error when the general technical knowledge about the state of the art is used and therefore cannot contribute to providing a patentable inventive step. It is considered that one skilled in the art, in seeking to provide a weldable composite material, would be able to readily achieve the claimed parameters using the materials of any one of D1-D3 using routine experimentation and without recourse to invention.

2.6 The invention defined in claims 2, 4, 9, 10, 11, 14 and 16 does not involve an inventive step when compared with the disclosures of any one of prior art documents D1-D3. Each of these documents are considered to disclose the features of claim 1 on which these claims depend. Each of D1-D3 further disclose material thicknesses greater than 1mm as defined in claim 10 (D1, para. 0032; D2, col. 2 ln. 56-66; D3, para. 0013-0014, Table 1). The invention of claims 2, 4, 9, 10, 11, 14 and 16 is distinguished from the prior art in that none of D1-D3 specifically disclose the details and parameters of resistance welding processes when applied to the materials disclosed in each of D1-D3. However, the subject matter of these claims is considered to recite features that constitute common general knowledge for one skilled in the art, the selection of which would be a matter of routine when applying resistance welding techniques to the materials disclosed in each of documents D1-D3.

[Continued in Supplemental Box 3]

Supplemental Box 3

In case the space in any of the preceding boxes is not sufficient.

Continuation of Box V:

2.7 The invention defined in claim 3 does not involve an inventive step when compared with the disclosure of either of prior art documents D2 or D3. The invention of this claim is distinguished from D2 and D3 in that neither of these documents disclose that a concentration of metallic fibres is between 10 and 30 percent of the total volume of the core layer.

However, it is considered that this difference relates to arrangements that could be achieved by trial and error when the general technical knowledge about the state of the art is used and therefore cannot contribute to providing a patentable inventive step. It is considered that one skilled in the art, in seeking to provide a weldable composite material, would be able to readily achieve the claimed parameters using the materials of any one of D1-D3 using routine experimentation and without recourse to invention.

2.8 The invention defined in claim 6 does not involve an inventive step when compared with the disclosure of prior art document D1. The invention of this claim is distinguished from D1 in that D1 does not disclose a core layer including a polymeric matrix including at least one polymer selected from the group consisting of a polyolefin, a polyamide, a polyester, a polyether, a polystyrene, a polymer including an acrylonitrile, a polymer including an acrylic acid, a polymer including an acrylate, a polyimide, a polycarbonate, an ionomer, and a copolymer including one or more of the above polymers. D1 instead discloses the use of an epoxy resin (D1, para. 0024).

However, it is considered that that the difference between the claimed invention and the citation constitutes no more than a mere technical equivalent. The claimed polymers are well known in the art and it would be clearly obvious to a person skilled in the art in view of the teaching of D1 (which recites epoxy resin as a mere example of a suitable polymer) that the polymer of D1 could be directly substituted for a polymer as claimed without changing the way the invention works. Therefore the claimed invention does not involve an inventive step.

As such, all of claims 1-6, 8-17, 19 and 20 are considered to be obvious and do not meet the requirements of Article 33(3) of the PCT with regard to inventive step.

2.9 The invention defined in claims 7 and 18 is considered to meet the criteria set out in PCT Article 33(3) with regard to the requirement of inventive step because the cited prior art alone or in obvious combination does not obviously suggest to a person skilled in the art the use of metallic fibres with a generally rectangular cross section. The closest prior art documents in this regard are D1-D3, which, while each teaching the use of metallic fibres, do not specifically teach or suggest fibres with a generally rectangular cross-section. Additionally, it is not considered obvious to one skilled in the art, in view of the disclosures of any of prior art documents D1-D3, to selectively use such fibres in a composite material. Therefore, these claims are considered to be inventive over the prior art.

## INDUSTRIAL APPLICABILITY (IA)

3.1 The invention defined in the claims is considered to meet the requirements of Industrial Applicability under Article 33(4) of the PCT because it can be made by, or used in, industry.

[Continued in Supplemental Box 4]

Supplemental Box 4

In case the space in any of the preceding boxes is not sufficient.

Continuation of Box V:

**P Category Documents:**

Document D4 is listed as a P category document in Box VI because it:

- discloses subject matter that is of particular relevance to this application and
- is published before the international filing date but after the priority date of this application.

Under the PCT, only documents published before the priority date of the instant application can deprive the claims of that application of novelty or inventive step.

However, the relevance of a document published after the priority date of the application under consideration is dependent on national law in individual countries.

This document is listed in Box VI because it may become significant in the National Phase.

WRITTEN OPINION OF THE
INTERNATIONAL SEARCHING AUTHORITY

International application No.
PCT/US2010/062138

**Box No. VI Certain documents cited**

1. Certain published documents (Rules 43*bis*.1 and 70.10)

| Application No. Patent No. | Publication date *(day/month/year)* | Filing date *(day/month/year)* | Priority date (valid claim) *(day/month/year)* |
|---|---|---|---|
| P, X: WO 2010/021899 | 25 February 2010 | 13 August 2009 | 18 August 2008 |

Document WO 2010/021899 (hereafter referred to as D4) discloses a composite material comprising a pair of spaced apart steel sheets and a core layer between the sheets, the volume of said core layer being about 25 volume % or more based on the total volume of the composite material (D4, para. 0086), said core layer including a plurality of steel fibres arranged in one or more masses of fibres that extend the thickness of the core layer so that the core layer is in electrical communication with the steel sheets (D4, Abstract, fig. 1B), and wherein said steel fibres have a cross sectional area perpendicular to the length of the fibres from about 1 x 10-5 mm2 to about 2.5 x 10-2 mm2 (D4, para. 0016, a circular fibre of diameter 50μm has a cross sectional area within the claimed range). Document D4 further discloses the application of said material in resistance welding processes (D4, para. 0020).

Consequently, document D4 is considered to be relevant to the novelty of claims 1, 3, 6, 8, 12, 15, 19 and 20; and relevant to the inventive step of 2, 4, 5, 10, 11, 13, 14 and 16.

2. Non-written disclosures (Rules 43*bis*.1 and 70.9)

| Kind of non-written disclosure | Date of non-written disclosure *(day/month/year)* | Date of written disclosure referring to non-written disclosure *(day/month/year)* |
|---|---|---|
| | | |

UNITED STATES PATENT AND TRADEMARK OFFICE

UNITED STATES DEPARTMENT OF COMMERCE
United States Patent and Trademark Office
Address: COMMISSIONER FOR PATENTS
P.O. Box 1450
Alexandria, Virginia 22313-1450
www.uspto.gov

| APPLICATION NO. | FILING DATE | FIRST NAMED INVENTOR | ATTORNEY DOCKET NO. | CONFIRMATION NO. |
|---|---|---|---|---|
| 12/978,974 | 12/27/2010 | Shimon Mizrahi | 1431-003 | 2199 |

25215 7590 05/18/2011
DOBRUSIN & THENNISCH PC
29 W LAWRENCE ST
SUITE 210
PONTIAC, MI 48342

| EXAMINER |
|---|

| ART UNIT | PAPER NUMBER |
|---|---|
| 3742 | |

| MAIL DATE | DELIVERY MODE |
|---|---|
| 05/18/2011 | PAPER |

**Please find below and/or attached an Office communication concerning this application or proceeding.**

The time period for reply, if any, is set in the attached communication.

UNITED STATES PATENT AND TRADEMARK OFFICE

Commissioner for Patents
United States Patent and Trademark Office
P.O. Box 1450
Alexandria, VA 22313-1450
www.uspto.gov

DOBRUSIN & THENNISCH PC
29 W LAWRENCE ST
SUITE 210
PONTIAC MI 48342

| | | |
|---|---|---|
| In re Application of | : | |
| MIZRAHI, SHIMON | : | DECISION ON REQUEST TO |
| Application No. 12/978,974 | : | PARTICIPATE IN PATENT |
| Filed: Dec. 27, 2010 | : | PROSECUTION HIGHWAY |
| Attorney Docket No. 1431-003 | : | PILOT PROGRAM AND PETITION |
| For: PROCESSES FOR WELDING | : | TO MAKE SPECIAL UNDER |
| COMPOSITE MATERIALS AND | : | 37 CFR 1.102(a) |
| ARTICLES THEREFROM | | |

This is a decision on the request to participate in the Patent Prosecution Highway (PPH) pilot program under 37 CFR 1.102(a), filed May 17, 2011 to make the above-identified application special.

The request and petition are Granted.

A grantable request to participate in the PPH pilot program and petition to make special require:

(1) The U.S. application must validly claim priority under 35 U.S.C. 119(a) to one or more applications filed in the IPAU;
(2) Applicant must submit a copy of the allowable/patentable claim(s) from the IPAU application(s);
(3) All the claims in the U.S. application must sufficiently correspond or be amended to sufficiently correspond to the allowable/patentable claim(s) in the IPAU application(s);
(4) Examination of the U.S. application has not begun;
(5) Applicant must submit a copy of all the office actions from each of the IPAU application(s) containing the allowable/patentable claim(s); and
(6) Applicant must submit an IDS listing the documents cited by the IPAU examiner in the IPAU office action along with copies of documents except U.S. patents or U.S. patent application publications.

The request to participate in the PPH pilot program and petition comply with the above requirements. This is to acknowledge the receipt the foreign priority claim documents. Accordingly, the above-identified application has been accorded "special" status.

Telephone inquiries concerning this decision should be directed to Henry C. Yuen at 571-272-4856.

All other inquiries concerning the examination or status of the application should be directed to the Supervisory Patent Examiner, Tu Hoang at 571-272-4780.

This application is currently undergoing pre-examination process. Upon completion, this application will be being forwarded to the examiner for action on the merits commensurate with this decision.

Petition is **granted**.

/Henry C. Yuen/

Henry C. Yuen, Special Programs Examiner
Technology Center 3700 – Mechanical Engineering,
Manufacturing and Products
571-272-4856

UNITED STATES PATENT AND TRADEMARK OFFICE

Commissioner for Patents
United States Patent and Trademark Office
P.O. Box 1450
Alexandria, VA 22313-1450
www.uspto.gov

In re Application of
James R. Martindale

Application No. 12979040

Filed: December 27,2010

Attorney Docket No.

:DECISION ON PETITION TO MAKE SPECIAL
:UNDER 37 CFR 1.102(c)(1)

This is a decision on the electronic petition under 37 CFR 1.102 (c)(1), filed 03-MAR-2011 to make the above-identified application special based on applicant's age as set forth in MPEP § 708.02, Section IV.

The petition is **GRANTED**.

A grantable petition to make an application special under 37 CFR 1.102(c)(1), MPEP § 708.02, Section IV: Applicant's Age must include a statement by applicant or a registered practitioner having evidence that applicant is at least 65 years of age. No fee is required.

Accordingly, the above-identified application has been accorded "special" status and will be taken up for action by the examiner upon the completion of all pre-examination processing.

Telephone inquiries concerning this electronic decision should be directed to the Electronic Business Center at 866-217-9197.

All other inquiries concerning either the examination or status of the application should be directed to the Technology Center.

UNITED STATES PATENT AND TRADEMARK OFFICE

Commissioner for Patents
United States Patent and Trademark Office
P.O. Box 1450
Alexandria, VA 22313-1450
www.uspto.gov

In re Application of
JULIEN EDWIN ROY

Application No. 12979045

Filed:

Attorney Docket No. 27775.08

:DECISION ON PETITION TO MAKE SPECIAL
:UNDER 37 CFR 1.102(c)(1)

This is a decision on the electronic petition under 37 CFR 1.102 (c)(1), filed 27-DEC-2010 to make the above-identified application special based on applicant's age as set forth in MPEP § 708.02, Section IV.

The petition is **GRANTED**.

A grantable petition to make an application special under 37 CFR 1.102(c)(1), MPEP § 708.02, Section IV: Applicant's Age must include a statement by applicant or a registered practitioner having evidence that applicant is at least 65 years of age. No fee is required.

Accordingly, the above-identified application has been accorded "special" status and will be taken up for action by the examiner upon the completion of all pre-examination processing.

Telephone inquiries concerning this electronic decision should be directed to the Electronic Business Center at 866-217-9197.

All other inquiries concerning either the examination or status of the application should be directed to the Technology Center.

PTO/SB/20PCT-KR (06-10)
Approved for use through 01/31/2012. OMB 0651-0058
U.S. Patent and Trademark Office; U. S. DEPARTMENT OF COMMERCE
Under the Paperwork Reduction Act of 1995, no persons are required to respond to a collection of information unless it displays a valid OMB control number.

# REQUEST FOR PARTICIPATION IN THE PATENT COOPERATION TREATY - PATENT PROSECUTION HIGHWAY (PCT-PPH) PILOT PROGRAM BETWEEN THE KOREAN INTELLECTUAL PROPERTY OFFICE (KIPO) AND THE USPTO

| | | | |
|---|---|---|---|
| Application No: | 12/979,068 | Filing date: | 12/27/2010 |
| First Named Inventor: | Skrivan et. al. | | |
| Title of the Invention: | SYSTEMS AND METHODS FOR LOCKING A PORTABLE ILLUMINATION SYSTEM | | |

**THIS REQUEST FOR PARTICIPATION IN THE PCT-PPH PILOT PROGRAM ALONG WITH THE REQUIRED DOCUMENTS MUST BE SUBMITTED VIA EFS-WEB. INFORMATION REGARDING EFS-WEB IS AVAILABLE AT HTTP://WWW.USPTO.GOV/EBC/EFS_HELP.HTML**

**APPLICANT HEREBY REQUESTS PARTICIPATION IN THE PCT-PPH PROGRAM AND PETITIONS TO MAKE THE ABOVE-IDENTIFIED APPLICATION SPECIAL UNDER THE PCT-PPH PROGRAM.**

The above-identified application is (1) a national stage entry of the corresponding PCT application, or (2) a national stage entry of another PCT application which claims priority to the corresponding PCT application, or (3) a national application that claims domestic/ foreign priority to the corresponding PCT application, or (4) a national application which forms the basis for the priority claim in the corresponding PCT application, or (5) a continuing application of a U.S. application that satisfies one of (1) to (4) above, or (6) a U.S. application that claims domestic benefit to a U.S. provisional application which forms the basis for the priority claim in the corresponding PCT application.

**The corresponding PCT application number(s) is/are:** PCT/US2011/025808

**The international filing date of the corresponding PCT application(s) is/are:** 23 February 2011

**I. List of Required Documents:**

a. **A copy of the latest international work product (WO/ISA, WO/IPEA, or IPER) in the above–identified corresponding PCT application(s)**

☑ Is attached.

☐ Is not attached because the document is already in the U.S. application.

b. **A copy of all claims which were indicated as having novelty, inventive step and industrial applicability in the above-identified corresponding PCT application(s).**

☑ Is attached.

☐ Is not attached because the document is already in the U.S. application.

c. **English translations of the documents in a. and b. above are attached (if the documents are not in the English language). A statement that the English translation is accurate is attached for the document in b. above.**



This collection of information is required by 35 U.S.C. 119, 37 CFR 1.55, and 37 CFR 1.102(d). The information is required to obtain or retain a benefit by the public, which is to file (and by the USPTO to process) an application. Confidentiality is governed by 35 U.S.C. 122 and 37 CFR 1.11 and 1.14. This collection is estimated to take 2 hours to complete, including gathering, preparing, and submitting the completed application form to the USPTO. Time will vary depending upon the individual case. Any comments on the amount of time you require to complete this form and/or suggestions for reducing this burden should be sent to the Chief Information Officer, U.S. Patent and Trademark Office, U.S. Department of Commerce, P.O. Box 1450, Alexandria, VA 22313-1450. DO NOT SEND FEES OR COMPLETED FORMS TO THIS ADDRESS.

Approved for use through 01/31/2012. OMB 0651-0058
U.S.Patent and Trademark Office; U.S. DEPARTMENT OF COMMERCE
Under the Paperwork Reduction Act of 1995, no persons are required to respond to a collection of information unless it displays a valid OMB control number.

# REQUEST FOR PARTICIPATION IN THE PCT-PPH PILOT PROGRAM BETWEEN THE KIPO AND THE USPTO

(continued)

| | |
|---|---|
| Application No.: | 12/979,068 |
| First Named Inventor: | Skrivan et. al. |

d. **(1) An information disclosure statement listing the documents cited in the international work products (ISR, WO/ISA, WO/IPEA, IPER) of the corresponding PCT application.**

- [✓] Is attached
- [ ] Has already been filed in the above-identified U.S. application on _____

**(2) Copies of all documents (except) for U.S. patents or U.S. patent application publications)**

- [✓] Are attached.
- [ ] Have already been filed in the above-identified U.S. application on _____

## II. Claims Correspondence Table:

| Claims in US Application | Patentable Claims in the corresponding PCT Application | Explanation regarding the correspondence |
|---|---|---|
| 1-20 | 1-20 | |
| | | |
| | | |
| | | |
| | | |
| | | |
| | | |
| | | |
| | | |
| | | |
| | | |
| | | |
| | | |
| | | |
| | | |
| | | |
| | | |
| | | |
| | | |

**III. All the claims in the US application sufficiently correspond to the patentable claims in the corresponding PCT application.**

| | |
|---|---|
| Signature /trentbaker/ | Date 10/19/11 |
| Name (Print/Typed) Trent Baker | Registration Number 46534 |

# Privacy Act Statement

The **Privacy Act of 1974 (P.L. 93-579)** requires that you be given certain information in connection with your submission of the attached form related to a patent application or patent. Accordingly, pursuant to the requirements of the Act, please be advised that: (1) the general authority for the collection of this information is 35 U.S.C. 2(b)(2); (2) furnishing of the information solicited is voluntary; and (3) the principal purpose for which the information is used by the U.S. Patent and Trademark Office is to process and/or examine your submission related to a patent application or patent. If you do not furnish the requested information, the U.S. Patent and Trademark Office may not be able to process and/or examine your submission, which may result in termination of proceedings or abandonment of the application or expiration of the patent.

The information provided by you in this form will be subject to the following routine uses:

1. The information on this form will be treated confidentially to the extent allowed under the Freedom of Information Act (5 U.S.C. 552) and the Privacy Act (5 U.S.C 552a). Records from this system of records may be disclosed to the Department of Justice to determine whether disclosure of these records is required by the Freedom of Information Act.
2. A record from this system of records may be disclosed, as a routine use, in the course of presenting evidence to a court, magistrate, or administrative tribunal, including disclosures to opposing counsel in the course of settlement negotiations.
3. A record in this system of records may be disclosed, as a routine use, to a Member of Congress submitting a request involving an individual, to whom the record pertains, when the individual has requested assistance from the Member with respect to the subject matter of the record.
4. A record in this system of records may be disclosed, as a routine use, to a contractor of the Agency having need for the information in order to perform a contract. Recipients of information shall be required to comply with the requirements of the Privacy Act of 1974, as amended, pursuant to 5 U.S.C. 552a(m).
5. A record related to an International Application filed under the Patent Cooperation Treaty in this system of records may be disclosed, as a routine use, to the International Bureau of the World Intellectual Property Organization, pursuant to the Patent Cooperation Treaty.
6. A record in this system of records may be disclosed, as a routine use, to another federal agency for purposes of National Security review (35 U.S.C. 181) and for review pursuant to the Atomic Energy Act (42 U.S.C. 218(c)).
7. A record from this system of records may be disclosed, as a routine use, to the Administrator, General Services, or his/her designee, during an inspection of records conducted by GSA as part of that agency's responsibility to recommend improvements in records management practices and programs, under authority of 44 U.S.C. 2904 and 2906. Such disclosure shall be made in accordance with the GSA regulations governing inspection of records for this purpose, and any other relevant ( *i.e.*, GSA or Commerce) directive. Such disclosure shall not be used to make determinations about individuals.
8. A record from this system of records may be disclosed, as a routine use, to the public after either publication of the application pursuant to 35 U.S.C. 122(b) or issuance of a patent pursuant to 35 U.S.C. 151. Further, a record may be disclosed, subject to the limitations of 37 CFR 1.14, as a routine use, to the public if the record was filed in an application which became abandoned or in which the proceedings were terminated and which application is referenced by either a published application, an application open to public inspection or an issued patent.
9. A record from this system of records may be disclosed, as a routine use, to a Federal, State, or local law enforcement agency, if the USPTO becomes aware of a violation or potential violation of law or regulation.

UNITED STATES PATENT AND TRADEMARK OFFICE

UNITED STATES DEPARTMENT OF COMMERCE
United States Patent and Trademark Office
Address: COMMISSIONER FOR PATENTS
P.O. Box 1450
Alexandria, Virginia 22313-1450
www.uspto.gov

| APPLICATION NO. | FILING DATE | FIRST NAMED INVENTOR | ATTORNEY DOCKET NO. | CONFIRMATION NO. |
|---|---|---|---|---|
| 12/979,223 | 12/27/2010 | Tomotake AONO | 18360.9.1 | 2649 |

52005 7590 04/29/2011
WORKMAN NYDEGGER
1000 Eagle Gate Tower
60 East South Temple
Salt Lake City, UT 84111

| EXAMINER |
|---|

| ART UNIT | PAPER NUMBER |
|---|---|
| 2629 | |

| NOTIFICATION DATE | DELIVERY MODE |
|---|---|
| 04/29/2011 | ELECTRONIC |

**Please find below and/or attached an Office communication concerning this application or proceeding.**

The time period for reply, if any, is set in the attached communication.

Notice of the Office communication was sent electronically on above-indicated "Notification Date" to the following e-mail address(es):

Docketing@wnlaw.com
WN_Status@WNLaw.com

UNITED STATES PATENT AND TRADEMARK OFFICE

Commissioner for Patents
United States Patent and Trademark Office
P.O. Box 1450
Alexandria, VA 22313-1450
www.uspto.gov

WORKMAN NYDEGGER
1000 Eagle Gate Tower
60 East South Temple
Salt Lake City UT 84111

| | | |
|---|---|---|
| In re Application of | : | |
| AONO, TOMOTAKE et al | : | DECISION ON REQUEST TO |
| Application No. 12/979,223 | : | PARTICIPATE IN PATENT |
| Filed: December 27, 2010 | : | PROSECUTION HIGHWAY |
| Attorney Docket No. 18360.9.1 | : | PROGRAM AND PETITION |
| | : | TO MAKE SPECIAL UNDER |
| | : | 37 CFR 1.102(a) |

This is a decision on the request to participate in the Patent Prosecution Highway (PPH) program and the petition under 37 CFR 1.102(a), filed February 24, 2011 to make the above-identified application special.

The request and petition are **GRANTED**.

A grantable request to participate in the PPH program and petition to make special require:

(1) The U.S. application must validly claim priority under 35 U.S.C. 119(a) to one or more applications filed in the JPO;
(2) Applicant must submit a copy of the allowable/patentable claim(s) from the JPO application(s) along with an English translation thereof and a statement that the English translation is accurate;
(3) All the claims in the U.S. application must sufficiently correspond or be amended to sufficiently correspond to the allowable/patentable claim(s) in the JPO application(s);
(4) Examination of the U.S. application has not begun;
(5) Applicant must submit a copy of all the office actions from each of the JPO application(s) containing the allowable/patentable claim(s) along with an English translation thereof and a statement that the English translation is accurate; and
(6) Applicant must submit an IDS listing the documents cited by the JPO examiner in the JPO office action along with copies of documents except U.S. patents or U.S. patent application publications.

The request to participate in the PPH program and petition comply with the above requirements. Accordingly, the above-identified application has been accorded "special" status.

Telephone inquiries concerning this decision should be directed to Michael Horabik at 571-272-3068.

All other inquiries concerning the examination or status of the application should be directed to Patent Application Information Retrieval (PAIR) system.

The application is being forwarded to the examiner for action on the merits commensurate with this decision.

/Michael Horabik/

Michael Horabik
Quality Assurance Specialist
Technology Center 2600
Communications

UNITED STATES PATENT AND TRADEMARK OFFICE

UNITED STATES DEPARTMENT OF COMMERCE
United States Patent and Trademark Office
Address: COMMISSIONER FOR PATENTS
P.O. Box 1450
Alexandria, Virginia 22313-1450
www.uspto.gov

| APPLICATION NO. | FILING DATE | FIRST NAMED INVENTOR | ATTORNEY DOCKET NO. | CONFIRMATION NO. |
|---|---|---|---|---|
| 12/979,231 | 12/27/2010 | Tomotake AONO | 18360.11.1 | 2663 |

52005 7590 03/29/2011
WORKMAN NYDEGGER
1000 Eagle Gate Tower
60 East South Temple
Salt Lake City, UT 84111

| EXAMINER |
|---|

| ART UNIT | PAPER NUMBER |
|---|---|
| 2629 | |

| NOTIFICATION DATE | DELIVERY MODE |
|---|---|
| 03/29/2011 | ELECTRONIC |

**Please find below and/or attached an Office communication concerning this application or proceeding.**

The time period for reply, if any, is set in the attached communication.

Notice of the Office communication was sent electronically on above-indicated "Notification Date" to the following e-mail address(es):

Docketing@wnlaw.com
WN_Status@WNLaw.com

UNITED STATES PATENT AND TRADEMARK OFFICE

Commissioner for Patents
United States Patent and Trademark Office
P.O. Box 1450
Alexandria, VA 22313-1450
www.uspto.gov

WORKMAN NYDEGGER
1000 Eagle Gate Tower
60 East South Temple
Salt Lake City UT 84111

| | | |
|---|---|---|
| In re Application of | : | |
| AONO, TOMOTAKE | : | DECISION ON REQUEST TO |
| Application No. 12/979,231 | : | PARTICIPATE IN PATENT |
| Filed: December 27, 2010 | : | PROSECUTION HIGHWAY |
| Attorney Docket No. 18360.11.1 | : | PROGRAM AND PETITION |
| | : | TO MAKE SPECIAL UNDER |
| | : | 37 CFR 1.102(a) |

This is a decision on the request to participate in the Patent Prosecution Highway (PPH) program and the petition under 37 CFR 1.102(a), filed February 24, 2011 to make the above-identified application special.

The request and petition are **GRANTED**.

A grantable request to participate in the PPH program and petition to make special require:

(1) The U.S. application must validly claim priority under 35 U.S.C. 119(a) to one or more applications filed in the JPO;
(2) Applicant must submit a copy of the allowable/patentable claim(s) from the JPO application(s) along with an English translation thereof and a statement that the English translation is accurate;
(3) All the claims in the U.S. application must sufficiently correspond or be amended to sufficiently correspond to the allowable/patentable claim(s) in the JPO application(s);
(4) Examination of the U.S. application has not begun;
(5) Applicant must submit a copy of all the office actions from each of the JPO application(s) containing the allowable/patentable claim(s) along with an English translation thereof and a statement that the English translation is accurate; and
(6) Applicant must submit an IDS listing the documents cited by the JPO examiner in the JPO office action along with copies of documents except U.S. patents or U.S. patent application publications.

The request to participate in the PPH program and petition comply with the above requirements. Accordingly, the above-identified application has been accorded "special" status.

Telephone inquiries concerning this decision should be directed to Michael Horabik at 571-272-3068.

All other inquiries concerning the examination or status of the application should be directed to Patent Application Information Retrieval (PAIR) system.

The application is being forwarded to the examiner for action on the merits commensurate with this decision.

/Michael Horabik/

Michael Horabik
Quality Assurance Specialist
Technology Center 2600
Communications

UNITED STATES PATENT AND TRADEMARK OFFICE

Commissioner for Patents
United States Patent and Trademark Office
P.O. Box 1450
Alexandria, VA 22313-1450
www.uspto.gov

KILPATRICK TOWNSEND & STOCKTON LLP
TWO EMBARCADERO CENTER
EIGHTH FLOOR
SAN FRANCISCO CA 94111-3834

MAILED
MAY 05 2011
OFFICE OF PETITIONS

| | | |
|---|---|---|
| In re Application of | : | |
| Lee et al. | : | DECISION GRANTING STATUS |
| Application No. 12/979,258 | : | UNDER 37 CFR 1.47(a) |
| Filed: December 27, 2010 | : | |
| Attorney Docket No. 87720-675276 (005700US) | : | |

This is in response to the petition under 37 CFR 1.47(a), filed April 12, 2011.

The petition is **GRANTED.**

Petitioner has shown that the non-signing inventor, Roger Lee, has constructively refused to join in the filing of the above-identified application.

The application and papers have been reviewed and found in compliance with 37 CFR 1.47(a). This application is hereby accorded Rule 1.47(a) status.

As provided in 37 CFR 1.47(c), this Office will forward notice of this application's filing to the non-signing inventor at the address given in the petition. Notice of the filing of this application will also be published in the Official Gazette.

It is noted that both joint inventor's residence and mailing address is the same. Given the fact that Mr. Lee no longer works at Semiconductor Manufacturing International Corporation, it is assumed that he does not receive mail there.

MPEP 605.03 states that, "Applicant's mailing address means that address at which he or she customarily receives his or her mail. Either applicant's home or business address is acceptable as the mailing address.... In situations where an inventor does not execute the oath or declaration and the inventor is not deceased, such as in an application filed under 37 CFR 1.47, the inventor's most recent home address must be given...."

Please file a supplemental ADS correcting Mr. Lee's residence and mailing address.

Deposit account no. 20-1430 will be charged the required $130.00 late declaration surcharge. The Office acknowledges receipt of the $200.00 Rule 47 petition fee and a $130.00 one month extension of time fee.

This application is being referred to the Office of Patent Application Processing for further pre-examination processing.

Telephone inquiries regarding this decision should be directed to the undersigned at (571) 272-3230.

Shirene Willis Brantley

Shirene Willis Brantley
Senior Petitions Attorney
Office of Petitions

UNITED STATES PATENT AND TRADEMARK OFFICE

Commissioner for Patents
United States Patent and Trademark Office
P.O. Box 1450
Alexandria, VA 22313-1450
www.uspto.gov

MARTIN D. MOYNIHAN d/b/a PRTSI,
INC.
P.O. BOX 16446
ARLINGTON VA 22215

MAILED
FEB 07 2012
OFFICE OF PETITIONS

| | | |
|---|---|---|
| In re Application of | : | |
| Gazit et al. | : | |
| Application Number: 12/979,406 | : | ON PETITION |
| Filing or 371(c) Date: 12/28/2010 | : | |
| Attorney Docket Number: 50298 | : | |

This is in response to the Petition to Accept Color Drawings under 37 CFR 1.84(a)(2), filed in the United States Patent and Trademark Office (USPTO) on December 28, 2010.

The petition is **DISMISSED**.

Any request for reconsideration of this decision must be submitted within **TWO (2) MONTHS** from the mail date of this decision. Extensions of time under 37 CFR 1.136(a) are permitted. The reconsideration request should include a cover letter entitled, "Renewed Petition under 37 CFR 1.84(a)(2)". No further petition fee is required for a renewed petition.

37 CFR 1.84(a)(2) states that the Office will accept color drawings only after granting a petition explaining why color drawings are necessary. The petition must include:

(i) The fee set forth in 1.17(h);

(ii) Three (3) sets of color drawings;[1]

(iii) An amendment to the specification to insert (unless the specification contains or has been previously amended to contain) the following language as the first paragraph of the brief description of the drawings:

The patent or application file contains at least one drawing executed in color. Copies of this patent or patent application publication with color drawing(s) will be provided by the Office upon request and payment of the necessary fee.

[1] The requirement for three (3) sets of color drawings is not applicable to color drawings submitted via EFS-Web. Therefore, only one set of color drawings is necessary when filing via EFS-Web. See MPEP 502.05(VIII)(C).

In addition, MPEP 608.02 states that a petition to accept color drawings will only be granted where the Office "has determined that a color drawings or photograph is the only practical medium by which to disclose in a printed utility patent the subject matter to be patented."

Petitioners assert that the necessity for the Color Drawings is to show nanostructures and distinguish between different field strengths and lines.

The Office has determined, however, that color drawings or photographs are not the only practical medium by which to disclose in a printed utility patent the subject matter to be patented. For example, proposed color Figure 6 shows results of a simulation experiment, but the claims are to the method and electronic assembly. MPEP 608.02, Section IX, DRAWINGS SYMBOLS provide graphic symbols that should be used to indicate various materials where the material is an important feature of the invention.

As color drawings or photographs are not necessary for an understanding of the invention, the petition is dismissed.

Further correspondence with respect to this matter should be addressed as follows:

By mail: Mail Stop Petitions
Commissioner for Patents
PO Box 1450
Alexandria VA 22313-1450

By FAX: 571-273-8300
Attn: Office of Petitions

The application is being forwarded to Group Art Unit 2811.

Telephone inquiries regarding this decision should be directed to the undersigned at (571)272-3231.

Douglas I. Wood
Senior Petitions Examiner
Office of Petitions

UNITED STATES PATENT AND TRADEMARK OFFICE

UNITED STATES DEPARTMENT OF COMMERCE
United States Patent and Trademark Office
Address: COMMISSIONER FOR PATENTS
P.O. Box 1450
Alexandria, Virginia 22313-1450
www.uspto.gov

| APPLICATION NO. | FILING DATE | FIRST NAMED INVENTOR | ATTORNEY DOCKET NO. | CONFIRMATION NO. |
|---|---|---|---|---|
| 12/979,463 | 12/28/2010 | Fredric EDELSTEIN | CICADA.0001 | 3042 |

20987 7590 02/10/2011
VOLENTINE & WHITT PLLC
ONE FREEDOM SQUARE
11951 FREEDOM DRIVE SUITE 1260
RESTON, VA 20190

| EXAMINER |
|---|
| LEE, BENJAMIN C |

| ART UNIT | PAPER NUMBER |
|---|---|
| 2612 | |

| NOTIFICATION DATE | DELIVERY MODE |
|---|---|
| 02/10/2011 | ELECTRONIC |

**Please find below and/or attached an Office communication concerning this application or proceeding.**

The time period for reply, if any, is set in the attached communication.

Notice of the Office communication was sent electronically on above-indicated "Notification Date" to the following e-mail address(es):

ptoinbox@volentine.com
cjohnson@volentine.com
aloomis@volentine.com

UNITED STATES PATENT AND TRADEMARK OFFICE

Commissioner for Patents
United States Patent and Trademark Office
P.O. Box 1450
Alexandria, VA 22313-1450
www.uspto.gov

VOLENTINE & WHITT P.L.L.C.
ONE FREEDOM SQUARE
11951 FREEDOM SQUARE SUITE 1260
RESTON, VIRGINIA 20190

| | | |
|---|---|---|
| In re Application of | : | |
| EDELSTEIN, FREDRIC et al. | : | |
| Application No. 12/979,463 | : | DECISION ON PETITION |
| Filed: December 28, 2010 | : | TO MAKE SPECIAL |
| For: **PLUGGABLE SECURITY DEVICE** | : | |

This is a decision on the petition filed December 28, 2010 under Manual of Patent Examination Procedure §708.02, VIII requesting accelerated examination.

The petition under Manual of Patent Examination Procedure §708.02, VIII, must:
(1) be filed prior to receiving any examination by the examiner,
(2) be accompanied by the required fee- $130,
(3) the claims should be directed to a single invention (if it is determined that the claims pertain to more than one invention, then applicant will have to make an election without traverse or forfeit accelerated examination status),
(4) state that a pre-examination search was made, and fully discuss the search method employed, such as classes and subclasses searched, publications, Chemical abstracts, patents, etc. A search made by a foreign patent office satisfies this requirement,
(5) be accompanied by a copy of each of the references most closely related to the subject matter encompassed by the claims if said references are not already of record,
(6) fully discuss the references, pointing out with the particularity required by 37 C.F.R. §1.111 (b) and (c), how the claimed subject matter is patentable over the references.

The petitioner meets all the above-listed requirements. Accordingly, the petition is **GRANTED**.

The application will retain its special status throughout its entire prosecution, including any appeal to the Board of Patent Appeals and Interferences, subject only to diligent prosecution by the applicant. The application file is being forwarded to the examiner for appropriate action in due course.

Wellington Chin
Special Program Examiner
Technology Center 2600
Communications

UNITED STATES PATENT AND TRADEMARK OFFICE

UNITED STATES DEPARTMENT OF COMMERCE
United States Patent and Trademark Office
Address: COMMISSIONER FOR PATENTS
P.O. Box 1450
Alexandria, Virginia 22313-1450
www.uspto.gov

| APPLICATION NO. | FILING DATE | FIRST NAMED INVENTOR | ATTORNEY DOCKET NO. | CONFIRMATION NO. |
|---|---|---|---|---|
| 12/979,481 | 12/28/2010 | Hideaki NONAKA | 1553-042A | 3076 |

22429 7590 04/06/2011
LOWE HAUPTMAN HAM & BERNER, LLP
1700 DIAGONAL ROAD
SUITE 300
ALEXANDRIA, VA 22314

| EXAMINER |
|---|
| ASHLEY, BOYER DOLINGER |

| ART UNIT | PAPER NUMBER |
|---|---|
| 3724 | |

| MAIL DATE | DELIVERY MODE |
|---|---|
| 04/06/2011 | PAPER |

**Please find below and/or attached an Office communication concerning this application or proceeding.**

The time period for reply, if any, is set in the attached communication.

UNITED STATES PATENT AND TRADEMARK OFFICE

Commissioner for Patents
United States Patent and Trademark Office
P.O. Box 1450
Alexandria, VA 22313-1450
www.uspto.gov

LOWE HAUPTMAN HAM & BERNER, LLP
1700 DIAGONAL ROAD
SUITE 300
ALEXANDRIA VA 22314

| | | |
|---|---|---|
| In re Application of | : | |
| NONAKA, HIDEAKI et al | : | DECISION ON REQUEST TO |
| Application No. 12/979,481 | : | PARTICIPATE IN PATENT |
| Filed: Dec. 28, 2010 | : | PCT/PROSECUTION HIGHWAY |
| Attorney Docket No. 1553-042A | : | PROGRAM AND PETITION |
| For: SHEET CUTTING APPARATUS | : | MAKE SPECIAL UNDER |
| | : | 37 CFR 1.102(a) |

This is a decision on the request to participate in the Patent Prosecution Highway (PPH) program and the petition under 37 CFR 1.102(a), filed April 5, 2011, to make the above-identified application special.

The request and petition are granted.

A grantable request to participate in the PPH pilot program and petition to make special require:

(1) The U.S. application must validly claim priority under 35 U.S.C. 119(a) to one or more applications filed in the JPO;
(2) Applicant must submit a copy of the allowable/patentable claim(s) from the JPO/PCT application(s) along with an English translation thereof and a statement that the English translation is accurate;
(3) All the claims in the U.S. application must sufficiently correspond or be amended to sufficiently correspond to the allowable/patentable claim(s) in the JPO application(s);
(4) Examination of the U.S. application has not begun;
(5) Applicant must submit a copy of all the office actions from each of the JPO/PCT application(s) containing the allowable/patentable claim(s) along with an English translation thereof and a statement that the English translation is accurate; and
(6) Applicant must submit an IDS listing the documents cited by the JPO examiner in the JPO office action along with copies of documents except U.S. patents or U.S. patent application publications.

In light of the petition being properly submitted, the request to participate in the PPH program and the petition comply with the above requirements. Accordingly, the above-identified application has been accorded "special" status.

The applicant is encouraged to cite and submit all relevant prior art references, if any, to facilitate examination in this application. This application will be forwarded to an examiner for examination.

Telephone inquiries concerning this decision should be directed to Henry C. Yuen at 571-272-4856. All other inquiries concerning the examination or status of the application should be directed to Boyer Ashley, SPE of Art Unit 3724 and 571-272-4502 for Class 83/171 and also accessible in the PAIR system at http://www.uspto.gov/ebc.index.html.

Petition is **granted**.

/Henry C. Yuen/

Henry C. Yuen, Special Programs Examiner
Technology Center 3700 – Mechanical Engineering,
Manufacturing and Products
571-272-4856

UNITED STATES PATENT AND TRADEMARK OFFICE

UNITED STATES DEPARTMENT OF COMMERCE
United States Patent and Trademark Office
Address: COMMISSIONER FOR PATENTS
P.O. Box 1450
Alexandria, Virginia 22313-1450
www.uspto.gov

| APPLICATION NO. | FILING DATE | FIRST NAMED INVENTOR | ATTORNEY DOCKET NO. | CONFIRMATION NO. |
|---|---|---|---|---|
| 12/979,542 | 12/28/2010 | Koichi MIYACHI | 70404.637/ok | 3177 |

54072 7590 02/03/2011
SHARP KABUSHIKI KAISHA
C/O KEATING & BENNETT, LLP
1800 Alexander Bell Drive
SUITE 200
Reston, VA 20191

| EXAMINER |
|---|

| ART UNIT | PAPER NUMBER |
|---|---|
| 2871 | |

| NOTIFICATION DATE | DELIVERY MODE |
|---|---|
| 02/03/2011 | ELECTRONIC |

**Please find below and/or attached an Office communication concerning this application or proceeding.**

The time period for reply, if any, is set in the attached communication.

Notice of the Office communication was sent electronically on above-indicated "Notification Date" to the following e-mail address(es):

JKEATING@KBIPLAW.COM
uspto@kbiplaw.com
pmedley@kbiplaw.com

UNITED STATES PATENT AND TRADEMARK OFFICE

Commissioner for Patents
United States Patent and Trademark Office
P.O. Box 1450
Alexandria, VA 22313-1450
www.uspto.gov

**SHARP KABUSHIKI KAISHA**
**C/O KEATING & BENNETT, LLP**
**1800 Alexander Bell Drive**
**SUITE 200**
**Reston VA 20191**

| | |
|---|---|
| **In re Application of** | **: DECISION ON REQUEST TO** |
| **Koichi MIYACHI** | **: PARTICIPATE IN THE PATENT** |
| **Application No.: 12/979,542** | **: PROSECUTION HIGHWAY** |
| **Filed: 28 December 2010** | **: PROGRAM AND PETITION** |
| **Attorney Docket No.: 70404.637/ok** | **: TO MAKE SPECIAL UNDER** |
| **For: LIQUID CRYSTAL DISPLAY** | **: 37 CFR 1.102(a)** |
| **DEVICE AND ELECTRONIC DEVICE** | |
| **USING THE SAME** | |

This is a decision on the request to participate in the Patent Prosecution Highway (PPH) program and the petition under 37 CFR 1.102(a), filed 28 December 2010, to make the above-identified application special.

The request and petition are **GRANTED**.

**Discussion**

A grantable request to participate in the PPH pilot program and petition to make special require:

1. The U.S. application is

    a. a Paris Convention application which either
        i. validly claims priority under 35 U.S.C. 119(a) and 37 CFR 1.55 to one or more applications filed in the JPO, or
        ii. validly claims priority to a PCT application that contains no priority claims, or
    b. a national stage application under the PCT (an application which entered the national stage in the U.S. from a PCT international application after compliance with 35 U.S.C. 371), which PCT application
        i. validly claims priority to an application filed in the JPO, or
        ii. validly claims priority to a PCT application that contains no priority claims, or
        iii. contains no priority claim, or
    c. a so-called bypass application filed under 35 U.S.C. 111(a) which validly claims benefit under 35 U.S.C. 120 to a PCT application, which PCT application
        i. validly claims priority to an application filed in the JPO, or

ii. validly claims priority to a PCT application that contains no priority claims, or
iii. contains no priority claim;

2. Applicant must submit a copy of:
   a. The allowable/patentable claim(s) from the JPO application(s);
   b. An English translation of the allowable/patentable claim(s) and
   c. A statement that the English translation is accurate;
3. Applicant must:
   a. Ensure all the claims in the U.S. application must sufficiently correspond or be amended to sufficiently correspond to the allowable/patentable claim(s) in the JPO application(s) and
   b. Submit a claims correspondence table in English;
4. Examination of the U.S. application has not begun;
5. Applicant must submit:
   a. Documentation of prior office action:
      i. a copy of the office action(s) just prior to the "Decision to Grant a Patent" from each of the JPO application(s) containing the allowable/patentable claim(s) or
      ii. if the allowable/patentable claims(s) are from a "Notification of Reasons for Refusal" then the Notification of Reasons for Refusal or
      iii. if the JPO application is a first action allowance then no office action from the JPO is necessary should be indicated on the request/petition form;
   b. An English language translation of the JPO Office action from (5)(a)(i)-(ii) above
   c. A statement that the English translation is accurate;
6. Applicant must submit:
   a. An IDS listing the documents cited by the JPO examiner in the JPO office action (unless already submitted in this application)
   b. Copies of the documents except U.S. patents or U.S. patent application publications (unless already submitted in this application);

The request to participate in the PPH pilot program and petition comply with the above requirements. Accordingly, the above-identified application has been accorded "special" status.

Inquiries concerning this decision should be directed to Lee W. Young at 571-272-4549.

All other inquiries concerning the examination or status of the application is accessible in the PAIR system at http://www.uspto.gov/ebc.index.html.

This application will be forwarded to the examiner for action on the merits commensurate with this decision once this application's formality reviews have been completed.

Lee W. Young
TQAS, Technology Center 2800 – Semiconductors
Electrical & Optical Systems & Components

UNITED STATES PATENT AND TRADEMARK OFFICE

Commissioner for Patents
United States Patent and Trademark Office
P.O. Box 1450
Alexandria, VA 22313-1450
www.uspto.gov

ALSTON & BIRD LLP
BANK OF AMERICA PLAZA
101 SOUTH TRYON STREET, SUITE 4000
CHARLOTTE NC 28280-4000

MAILED

OCT 18 2011

OFFICE OF PETITIONS

| | | |
|---|---|---|
| In re Application of | : | |
| De Souza et al. | : | |
| Application No. 12/979,598 | : | DECISION ON PETITION |
| Filing Date: 12/28/2010 | : | UNDER 37 CFR 1.55(c) |
| Attorney Docket Number: 051504/4000184 | : | |

This is a decision on the petition under 37 CFR 1.55(c), filed on September 19, 2011, to accept an unintentionally delayed claim under 35 U.S.C. §§ 119(a)-(d) for the benefit of priority to foreign Brazilian Application No. BRPI0703769-4, filed on August 31, 2007.

The petition is **DISMISSED**.

This pending nonprovisional application is a division of Application No. 12/675,553, which is a national stage filing of international Application No. PCT/BR2008/000210, filed on July 21, 2008, which is after November 29, 2000, and did not include a proper reference to the foreign application, for which benefit is now sought, within the later of four months from the actual filing date of the application or sixteen months from the filing date of the prior foreign application. Since the claim for priority is submitted after the period specified in 37 CFR 1.55(a)(1)(i), this is an appropriate petition under the provisions of 37 CFR 1.55(c).

A petition under 37 CFR 1.55(c) to accept an unintentionally delayed claim for priority requires:

(1) The nonprovisional application claiming the benefit of an earlier filing date must be filed on or after November 29, 2000;

(2) the claim submitted with the petition must identify the prior foreign application for which priority is claimed, as well as any foreign application for the same subject matter and having a filing date before that of the application for which priority is claimed, by the application number, country, and the filing date and be included either in an oath or declaration (37 CFR 1.63(c)(2)) or in an Application Data Sheet (37 CFR 1.76(b)(6);

(3) the surcharge as set forth in 37 CFR 1.17(t);

(4) a statement that the entire delay between the date the claim was due under 37 CFR 1.55(a)(1) and the date the claim was filed was unintentional (the Director

may require additional information where there is a question whether the delay was unintentional); and

(5) the above-identified nonprovisional application must be filed within 12 months of the filing date of the foreign application.

The petition fails to comply with item (2) above. In this regard, a review of the file record fails to disclose that the correct priority information was included in an oath or declaration or in an Application Data Sheet (ADS) in accordance with 37 CFR 1.76(b)(6). Unless provided in an ADS, 37 CFR 1.63(c)(2) requires that the oath or declaration must identify the foreign application for patent (or inventor's certificate) for which priority is claimed under 37 CFR 1.55, and any foreign application having a filing date before that of the application on which priority is claimed, by specifying the application number, country, day, month, and year of its filing. *Note* MPEP 201.14.

In view of the above, compliance with 37 CFR 1.63(c)(2) or 37 CFR 1.76(b)(6) must be satisfied if applicant desires to claim priority to the foreign application noted in the petition. Any future petition should include a cover letter and be entitled "Renewed Petition under 37 CFR 1.55(c)."

Further correspondence with respect to this matter should be addressed as follows:

By mail: Mail Stop PETITIONS
Commissioner for Patents
Post Office Box 1450
Alexandria, VA 22313-1450

By hand: Customer Service Window
Mail Stop Petitions
Randolph Building
401 Dulany Street
Alexandria, VA 22314

By fax: (571) 273-8300
ATTN: Office of Petitions

A reply may also be filed via the EFS-Web filing system of the USPTO.

Any questions concerning this matter may be directed to Senior Petitions Attorney Douglas I. Wood at (571) 272-3231.

Bryan Lin

Bryan Lin
PCT Legal Examiner
Office of PCT Legal Administration

UNITED STATES PATENT AND TRADEMARK OFFICE

Commissioner for Patents
United States Patent and Trademark Office
P.O. Box 1450
Alexandria, VA 22313-1450
www.uspto.gov

ALSTON & BIRD LLP
BANK OF AMERICA PLAZA
101 SOUTH TRYON STREET, SUITE 4000
CHARLOTTE NC 28280-4000

MAILED

NOV 14 2011

OFFICE OF PETITIONS

| | | |
|---|---|---|
| In re Application of | : | |
| De Souza et al. | : | |
| Application No. 12/979,598 | : | DECISION ON PETITION |
| Filed: 12/28/2010 | : | UNDER 37 CFR 1.55(c) |
| Attorney Docket No. 051504/400184 | : | |

This is a decision on the petition filed on October 28, 2011, which is treated as a renewed petition under 37 CFR 1.55(c), to accept an unintentionally delayed claim for the benefit of priority to foreign Brazilian Application No. PI0703769-4, filed on August 31, 2007.

The petition is **GRANTED**.

This pending nonprovisional application was filed after November 29, 2000, and did not include a reference to the foreign application, for which benefit is now sought, within the later of four months from the actual filing date of the application or sixteen months from the filing date of the prior foreign application. Since the claim for priority is submitted after the period specified in 37 CFR 1.55(a)(1)(i), this is an appropriate petition under the provisions of 37 CFR 1.55(c).

A petition under 37 CFR 1.55(c) to accept an unintentionally delayed claim for priority requires:

(1) The nonprovisional application claiming the benefit of an earlier filing date must be filed on or after November 29, 2000;

(2) the claim submitted with the petition must identify the prior foreign application for which priority is claimed, as well as any foreign application for the same subject matter and having a filing date before that of the application for which priority is claimed, by the application number, country, and the filing date and be included either in an oath or declaration (37 CFR 1.63(c)(2)) or in an Application Data Sheet (37 CFR 1.76(b)(6);

(3) the surcharge as set forth in 37 CFR 1.17(t);

(4) a statement that the entire delay between the date the claim was due under 37 CFR 1.55(a)(1) and the date the claim was filed was unintentional (the Director may require additional information where there is a question whether the delay was unintentional); and

(5) the above-identified nonprovisional application must be filed within 12 months of the filing date of the foreign application.

This pending nonprovisional application is a division of Application No. 12/675,553, which is a national stage filing of international Application No. PCT/BR2008/000210, filed on July 21, 2008, which is after November 29, 2000 and within 12 months of August 31, 2007 (the filing date of the foreign application to which benefit is now being claimed). On October 28, 2011, a signed Application Data Sheet was filed which identifies the foreign application for which priority is claimed by application number, country and filing date. The required petition fee of $1410.00 was received with the petition. Lastly, petitioner has provided an adequate statement of unintentional delay.

All of the above requirements having been satisfied, the late claim for priority under 35 U.S.C. § 119(a)-(d) is accepted as being unintentionally delayed.

***The granting of the petition to accept the delayed benefit claim to the prior-filed application under 37 CFR 1.55(c) should not be construed as meaning that this application is entitled to the benefit of the prior-filed application. In order for this application to be entitled to the benefit of the prior-filed application, all other requirements under 35 U.S.C. § 119(a)-(d) and 37 CFR 1.55(a)(1) must be met. Similarly, the fact that the corrected Filing Receipt accompanying this decision on petition includes the prior-filed application should not be construed as meaning that applicant is entitled to the claim for benefit of priority to the prior-filed application noted thereon. Accordingly, the examiner will, in due course, consider this benefit claim and determine whether this application is entitled to the benefit of the earlier filing date.***

A corrected Filing Receipt, which includes the priority claim to the prior-filed foreign applications, accompanies this decision on petition.

This application is being referred to Technology Center AU 1711 for consideration by the examiner of record of the foreign priority claim under 35 U.S.C. § 119(a)-(d).

Any inquiries directly pertaining to this matter may be directed to Senior Petitions Attorney Douglas I. Wood at (571) 272-3231.

Bryan Lin

Bryan Lin
PCT Legal Examiner
Office of PCT Legal Administration

ATTACHMENT: Corrected Filing Receipt

UNITED STATES PATENT AND TRADEMARK OFFICE

UNITED STATES DEPARTMENT OF COMMERCE
United States Patent and Trademark Office
Address: COMMISSIONER FOR PATENTS
P.O. Box 1450
Alexandria, Virginia 22313-1450
www.uspto.gov

| APPLICATION NUMBER | FILING or 371(c) DATE | GRP ART UNIT | FIL FEE REC'D | ATTY.DOCKET.NO | TOT CLAIMS | IND CLAIMS |
|---|---|---|---|---|---|---|
| 12/979,598 | 12/28/2010 | 1711 | 1520 | 051504/400184 | 4 | 1 |

**CONFIRMATION NO. 3300**

**CORRECTED FILING RECEIPT**

826
ALSTON & BIRD LLP
BANK OF AMERICA PLAZA
101 SOUTH TRYON STREET, SUITE 4000
CHARLOTTE, NC 28280-4000

*OC000000050762403*

Date Mailed: 11/14/2011

Receipt is acknowledged of this non-provisional patent application. The application will be taken up for examination in due course. Applicant will be notified as to the results of the examination. Any correspondence concerning the application must include the following identification information: the U.S. APPLICATION NUMBER, FILING DATE, NAME OF APPLICANT, and TITLE OF INVENTION. Fees transmitted by check or draft are subject to collection. Please verify the accuracy of the data presented on this receipt. **If an error is noted on this Filing Receipt, please submit a written request for a Filing Receipt Correction. Please provide a copy of this Filing Receipt with the changes noted thereon. If you received a "Notice to File Missing Parts" for this application, please submit any corrections to this Filing Receipt with your reply to the Notice. When the USPTO processes the reply to the Notice, the USPTO will generate another Filing Receipt incorporating the requested corrections**

**Applicant(s)**

Valmir Zacarias De Souza, Jundiai, BRAZIL;

**Power of Attorney:** The patent practitioners associated with Customer Number 00826

**Domestic Priority data as claimed by applicant**

This application is a DIV of 12/675,553 02/26/2010
which is a 371 of PCT/BR2008/000210 07/21/2008

**Foreign Applications** (You may be eligible to benefit from the **Patent Prosecution Highway** program at the USPTO. Please see http://www.uspto.gov for more information.)
BRAZIL PI0703769-4 08/31/2007

**If Required, Foreign Filing License Granted:** 01/11/2011

The country code and number of your priority application, to be used for filing abroad under the Paris Convention, is **US 12/979,598**

**Projected Publication Date:** Not Applicable

**Non-Publication Request:** No

**Early Publication Request:** No

**Title**

Process and System for Removing Printing In Metallic Packages

**Preliminary Class**

134

## PROTECTING YOUR INVENTION OUTSIDE THE UNITED STATES

Since the rights granted by a U.S. patent extend only throughout the territory of the United States and have no effect in a foreign country, an inventor who wishes patent protection in another country must apply for a patent in a specific country or in regional patent offices. Applicants may wish to consider the filing of an international application under the Patent Cooperation Treaty (PCT). An international (PCT) application generally has the same effect as a regular national patent application in each PCT-member country. The PCT process **simplifies** the filing of patent applications on the same invention in member countries, but **does not result** in a grant of "an international patent" and does not eliminate the need of applicants to file additional documents and fees in countries where patent protection is desired.

Almost every country has its own patent law, and a person desiring a patent in a particular country must make an application for patent in that country in accordance with its particular laws. Since the laws of many countries differ in various respects from the patent law of the United States, applicants are advised to seek guidance from specific foreign countries to ensure that patent rights are not lost prematurely.

Applicants also are advised that in the case of inventions made in the United States, the Director of the USPTO must issue a license before applicants can apply for a patent in a foreign country. The filing of a U.S. patent application serves as a request for a foreign filing license. The application's filing receipt contains further information and guidance as to the status of applicant's license for foreign filing.

Applicants may wish to consult the USPTO booklet, "General Information Concerning Patents" (specifically, the section entitled "Treaties and Foreign Patents") for more information on timeframes and deadlines for filing foreign patent applications. The guide is available either by contacting the USPTO Contact Center at 800-786-9199, or it can be viewed on the USPTO website at http://www.uspto.gov/web/offices/pac/doc/general/index.html.

For information on preventing theft of your intellectual property (patents, trademarks and copyrights), you may wish to consult the U.S. Government website, http://www.stopfakes.gov. Part of a Department of Commerce initiative, this website includes self-help "toolkits" giving innovators guidance on how to protect intellectual property in specific countries such as China, Korea and Mexico. For questions regarding patent enforcement issues, applicants may call the U.S. Government hotline at 1-866-999-HALT (1-866-999-4158).

## LICENSE FOR FOREIGN FILING UNDER

## Title 35, United States Code, Section 184

## Title 37, Code of Federal Regulations, 5.11 & 5.15

**GRANTED**

The applicant has been granted a license under 35 U.S.C. 184, if the phrase "IF REQUIRED, FOREIGN FILING LICENSE GRANTED" followed by a date appears on this form. Such licenses are issued in all applications where the conditions for issuance of a license have been met, regardless of whether or not a license may be required as

set forth in 37 CFR 5.15. The scope and limitations of this license are set forth in 37 CFR 5.15(a) unless an earlier license has been issued under 37 CFR 5.15(b). The license is subject to revocation upon written notification. The date indicated is the effective date of the license, unless an earlier license of similar scope has been granted under 37 CFR 5.13 or 5.14.

This license is to be retained by the licensee and may be used at any time on or after the effective date thereof unless it is revoked. This license is automatically transferred to any related applications(s) filed under 37 CFR 1.53(d). This license is not retroactive.

The grant of a license does not in any way lessen the responsibility of a licensee for the security of the subject matter as imposed by any Government contract or the provisions of existing laws relating to espionage and the national security or the export of technical data. Licensees should apprise themselves of current regulations especially with respect to certain countries, of other agencies, particularly the Office of Defense Trade Controls, Department of State (with respect to Arms, Munitions and Implements of War (22 CFR 121-128)); the Bureau of Industry and Security, Department of Commerce (15 CFR parts 730-774); the Office of Foreign AssetsControl, Department of Treasury (31 CFR Parts 500+) and the Department of Energy.

**NOT GRANTED**

No license under 35 U.S.C. 184 has been granted at this time, if the phrase "IF REQUIRED, FOREIGN FILING LICENSE GRANTED" DOES NOT appear on this form. Applicant may still petition for a license under 37 CFR 5.12, if a license is desired before the expiration of 6 months from the filing date of the application. If 6 months has lapsed from the filing date of this application and the licensee has not received any indication of a secrecy order under 35 U.S.C. 181, the licensee may foreign file the application pursuant to 37 CFR 5.15(b).

---


## *SelectUSA*

The United States represents the largest, most dynamic marketplace in the world and is an unparalleled location for business investment, innovation and commercialization of new technologies. The USA offers tremendous resources and advantages for those who invest and manufacture goods here. Through SelectUSA, our nation works to encourage, facilitate, and accelerate business investment. To learn more about why the USA is the best country in the world to develop technology, manufacture products, and grow your business, visit SelectUSA.gov.

UNITED STATES PATENT AND TRADEMARK OFFICE

UNITED STATES DEPARTMENT OF COMMERCE
United States Patent and Trademark Office
Address: COMMISSIONER FOR PATENTS
P.O. Box 1450
Alexandria, Virginia 22313-1450
www.uspto.gov

| APPLICATION NO. | FILING DATE | FIRST NAMED INVENTOR | ATTORNEY DOCKET NO. | CONFIRMATION NO. |
|---|---|---|---|---|
| 12/979,598 | 12/28/2010 | Valmir Zacarias De Souza | 051504/400184 | 3300 |

826 7590 01/10/2012
ALSTON & BIRD LLP
BANK OF AMERICA PLAZA
101 SOUTH TRYON STREET, SUITE 4000
CHARLOTTE, NC 28280-4000

| EXAMINER |
|---|
| CHAUDHRY, SAEED T |

| ART UNIT | PAPER NUMBER |
|---|---|
| 1711 | |

| MAIL DATE | DELIVERY MODE |
|---|---|
| 01/10/2012 | PAPER |

**Please find below and/or attached an Office communication concerning this application or proceeding.**

The time period for reply, if any, is set in the attached communication.

UNITED STATES PATENT AND TRADEMARK OFFICE

Commissioner for Patents
United States Patent and Trademark Office
P.O. Box 1450
Alexandria, VA 22313-1450
www.uspto.gov

ALSTON & BIRD LLP
BANK OF AMERICA PLAZA
101 SOUTH TRYON STREET, SUITE 4000
CHARLOTTE NC 28280-4000

Applicant: De Souza
Appl. No.: 12/979,598
Filing Date: December 28, 2010
Title: PROCESS AND SYSTEM FOR REMOVING PRINTING IN METALLIC PACKAGES
Attorney Docket No.: 051504/400184
Pub. No.: US 2011/0088730 A1
Pub. Date: April 21, 2011

This is a decision on the request for republication of patent application publication under 37 CFR 1.221(a), filed on May 6, 2011, and again on January 6, 2012, for the above-identified application.

The request under 37 CFR 1.221(a) is DISMISSED.

37 CFR 1.221(a) requires "a copy of the application in compliance with the Office electronic filing system requirements and be accompanied by the publication fee set forth in § 1.18(d) and the processing fee set forth in § 1.17(i)". If the request for republication does not comply with the electronic filing system requirements, the republication will not take place and the publication fee set forth in § 1.18(d) will be refunded. The processing fee will be retained.

The applicant did not supply a copy of the application in compliance with the Office electronic filing system, as required by 37 CFR 1.221(a) because **the applicant submitted the papers as a "Document for an existing application", which are entered into the application file, and not as a "Pre-Grant Publication" submission**. The request for republication does not comply with the electronic filing system requirements, thus republication will not take place.

Any request for republication under 37 CFR 1.221(a), must be submitted via the EFS system, as a Pre-Grant publication submission and must include a copy of the application in compliance with the Office electronic filing system requirements. The applicant is directed to the following website for additional instructions on how to submit a Pre-Grant Publication submission via the electronic filing system:

http://www.uspto.gov/ebc/portal/efs/pgpub_quickstart.pdf

Any questions or requests for reconsideration of the decision should be addressed as follows:

By mail to: Mail Stop PGPUB
Commissioner for Patents
P.O. Box 1450
Alexandria, Va. 22313-1450

By facsimile: 571-273-8300

Telephone inquiries regarding this correspondence should be directed to The Office of Data Management at 571-272-4200.

Tammy J. Koontz
Office of Data Management
United States Patent & Trademark Office

```
Adjustment date: 01/13/2012  KKING1
01/06/2012 INTEFSW  00009799 160605   12979598
01 FC:1504        300.00 CR
```

```
Adjustment date: 01/13/2012  KKING1
05/09/2011 INTEFSW  00003749 160605   12979598
01 FC:1504        300.00 CR
```

**Doc Code: PET.GREEN**
**Document Description: Petition for Green Tech Pilot**

PTO/SB/420 (11-10)
Approved for use through 01/31/2011. OMB 0651-0062
U.S. Patent and Trademark Office; U. S. DEPARTMENT OF COMMERCE
Under the Paperwork Reduction Act of 1995, no persons are required to respond to a collection of information unless it displays a valid OMB control number.

# PETITION TO MAKE SPECIAL UNDER THE GREEN TECHNOLOGY PILOT PROGRAM

| | | |
|---|---|---|
| Attorney Docket Number: CU-07874 DCB | Application Number (if known): to be assigned | Filing date: herewith |
| First Named Inventor: Colegrove | | |
| Title: Optimal Thermal Properties In Light Weight And High Performance Braking Composite Clincher Or Tubular Tire Bicycle Wheel Rir | | |

**APPLICANT HEREBY REQUESTS TO PARTICIPATE IN THE GREEN TECHNOLOGY PILOT PROGRAM FOR THE ABOVE-IDENTIFIED APPLICATION. See Instruction Sheet on page 2.**

This petition must be timely filed electronically using the USPTO electronic filing system, EFS-Web.

1. By filing this petition:

   **Applicant is requesting early publication: Applicant hereby requests early publication under 37 CFR 1.219 and the publication fee set forth in 37 CFR 1.18(d) accompanies this request.**

2. By filing this petition: applicant is agreeing to make an election without traverse in a telephonic interview and elect an invention that meets the eligibility requirements for the Green Technology Pilot Program, if the Office determines that the claims are not obviously directed to a single invention. See Instruction Sheet.

3. This request is accompanied by statements of special status for the eligibility requirement.

4. The application contains no more than three (3) independent claims and twenty (20) total claims.

5. The application does not contain any multiple dependent claims.

6. Other attachments: Preliminary Amendment, Substitute Specification, Declaration of David Guzik

| | |
|---|---|
| Signature David C. Brezina | Date December 23, 2010 |
| Name (Print/Typed) David C. Brezina | Registration Number 34,128 |

***Note:*** *Signatures of all the inventors or assignees of record of the entire interest or their representative(s) are required in accordance with 37 CFR 1.33 and 11.18. Please see 37 CFR 1.4(d) for the form of the signature. If necessary, submit multiple forms for more than one signature see below*.*

☒ *Total of 1 forms are submitted.

The information is required to obtain or retain a benefit by the public which is to file (and by the USPTO to process) an application. Confidentiality is governed by 35 U.S.C. 122 and 37 CFR 1.11 and 1.14. This collection is estimated to take 12 hours to complete, including gathering, preparing, and submitting the completed application form to the USPTO. Time will vary depending upon the individual case. Any comments on the amount of time you require to complete this form and/or suggestions for reducing this burden, should be sent to the Chief Information Officer, U.S. Patent and Trademark Office, U.S. Department of Commerce, P.O. Box 1450, Alexandria, VA 22313-1450. DO NOT SEND FEES OR COMPLETED FORMS TO THIS ADDRESS. **SEND TO: Commissioner for Patents, P.O. Box 1450, Alexandria, VA 22313-1450.**

*If you need assistance in completing the form, call 1-800-PTO-9199 and select option 2.*

Under the Paperwork Reduction Act of 1995, no persons are required to respond to a collection of information unless it displays a valid OMB control number.

# Instruction Sheet for Petition to Make Special Under the Green Technology Pilot Program

(Not to be Submitted to the USPTO)

**The following is a summary of the requirements (for more information see the notices (i) "Pilot Program for Green Technologies Including Greenhouse Gas Reduction," (ii) "Elimination of Classification Requirement in the Green Technology Pilot Program," and (iii) "Expansion and Extension of the Green Technology Pilot Program," available on the USPTO web site at http://www.uspto.gov/patents/init_events/green_tech.jsp):**

1) The application must be a non-reissue, non-provisional utility application filed under 35 U.S.C. 111 (a), or an international application that has entered the national stage in compliance with 35 U.S.C. 371, irrespective of the filing date of the application. Reexamination proceedings are excluded from this pilot program.

2) The application must contain three or fewer independent claims and twenty or fewer total claims. The application must not contain any multiple dependent claims. For an application that contains more than three independent claims or twenty total claims, or multiple dependent claims, applicant must file a preliminary amendment in compliance with 37 CFR 1.121 to cancel the excess claims and/or the multiple dependent claims at the time the petition to make special is filed.

3) The claims must be directed to a single invention that materially enhances the quality of the environment, or that materially contributes to: (1) the discovery or development of renewable energy resources; (2) the more efficient utilization and conservation of energy resources; or (3) green house gas emission reduction (see the eligibility requirements of sections II and III of the notice (i) cited above). The petition must include a statement that, if the USPTO determines that the claims are directed to multiple inventions (e.g., in a restriction requirement), applicant will agree to make an election without traverse in a telephonic interview, and elect an invention that meets the eligibility requirements in section II or III of the notice (i) cited above.

4) The petition to make special must be timely filed electronically using the USPTO electronic filing system, EFS-Web, and selecting the document description of "Petition for Green Tech Pilot" on the EFS-Web screen. Applicant should use form PTO/SB/420, which is available as a Portable Document Format (PDF) fillable form in EFS-Web and on the USPTO Web site.

5) The petition to make special must be filed at least one day prior to the date that a first Office action (which may be an Office action containing only a restriction requirement) appears in the Patent Application Information Retrieval (PAIR) system. Applicant may check the status of the application using PAIR.

6) The petition to make special must be accompanied by a request for early publication in compliance with 37 CFR 1.219 and the publication fee set forth in 37 CFR 1.18(d).

## Privacy Act Statement

The **Privacy Act of 1974 (P.L. 93-579)** requires that you be given certain information in connection with your submission of the attached form related to a patent application or patent. Accordingly, pursuant to the requirements of the Act, please be advised that: (1) the general authority for the collection of this information is 35 U.S.C. 2(b)(2); (2) furnishing of the information solicited is voluntary; and (3) the principal purpose for which the information is used by the U.S. Patent and Trademark Office is to process and/or examine your submission related to a patent application or patent. If you do not furnish the requested information, the U.S. Patent and Trademark Office may not be able to process and/or examine your submission, which may result in termination of proceedings or abandonment of the application or expiration of the patent.

The information provided by you in this form will be subject to the following routine uses:

1. The information on this form will be treated confidentially to the extent allowed under the Freedom of Information Act (5 U.S.C. 552) and the Privacy Act (5 U.S.C 552a). Records from this system of records may be disclosed to the Department of Justice to determine whether disclosure of these records is required by the Freedom of Information Act.
2. A record from this system of records may be disclosed, as a routine use, in the course of presenting evidence to a court, magistrate, or administrative tribunal, including disclosures to opposing counsel in the course of settlement negotiations.
3. A record in this system of records may be disclosed, as a routine use, to a Member of Congress submitting a request involving an individual, to whom the record pertains, when the individual has requested assistance from the Member with respect to the subject matter of the record.
4. A record in this system of records may be disclosed, as a routine use, to a contractor of the Agency having need for the information in order to perform a contract. Recipients of information shall be required to comply with the requirements of the Privacy Act of 1974, as amended, pursuant to 5 U.S.C. 552a(m).
5. A record related to an International Application filed under the Patent Cooperation Treaty in this system of records may be disclosed, as a routine use, to the International Bureau of the World Intellectual Property Organization, pursuant to the Patent Cooperation Treaty.
6. A record in this system of records may be disclosed, as a routine use, to another federal agency for purposes of National Security review (35 U.S.C. 181) and for review pursuant to the Atomic Energy Act (42 U.S.C. 218(c)).
7. A record from this system of records may be disclosed, as a routine use, to the Administrator, General Services, or his/her designee, during an inspection of records conducted by GSA as part of that agency's responsibility to recommend improvements in records management practices and programs, under authority of 44 U.S.C. 2904 and 2906. Such disclosure shall be made in accordance with the GSA regulations governing inspection of records for this purpose, and any other relevant (*i.e.*, GSA or Commerce) directive. Such disclosure shall not be used to make determinations about individuals.
8. A record from this system of records may be disclosed, as a routine use, to the public after either publication of the application pursuant to 35 U.S.C. 122(b) or issuance of a patent pursuant to 35 U.S.C. 151. Further, a record may be disclosed, subject to the limitations of 37 CFR 1.14, as a routine use, to the public if the record was filed in an application which became abandoned or in which the proceedings were terminated and which application is referenced by either a published application, an application open to public inspection or an issued patent.
9. A record from this system of records may be disclosed, as a routine use, to a Federal, State, or local law enforcement agency, if the USPTO becomes aware of a violation or potential violation of law or regulation.

UNITED STATES PATENT AND TRADEMARK OFFICE

UNITED STATES DEPARTMENT OF COMMERCE
United States Patent and Trademark Office
Address: COMMISSIONER FOR PATENTS
P.O. Box 1450
Alexandria, Virginia 22313-1450
www.uspto.gov

| APPLICATION NO. | FILING DATE | FIRST NAMED INVENTOR | ATTORNEY DOCKET NO. | CONFIRMATION NO. |
|---|---|---|---|---|
| 12/979,606 | 12/28/2010 | James COLEGROVE | CU-7874 DCB | 3311 |

26530 7590 01/20/2011
LADAS & PARRY LLP
224 SOUTH MICHIGAN AVENUE
SUITE 1600
CHICAGO, IL 60604

| EXAMINER |
|---|

| ART UNIT | PAPER NUMBER |
|---|---|
| 3617 | |

| MAIL DATE | DELIVERY MODE |
|---|---|
| 01/20/2011 | PAPER |

**Please find below and/or attached an Office communication concerning this application or proceeding.**

The time period for reply, if any, is set in the attached communication.

UNITED STATES PATENT AND TRADEMARK OFFICE

Commissioner for Patents
United States Patent and Trademark Office
P.O. Box 1450
Alexandria, VA 22313-1450
www.uspto.gov

JAN 20 2011

LADAS & PARRY LLP
224 SOUTH MICHIGAN AVENUE
SUITE 1600
CHICAGO IL 60604

| | | |
|---|---|---|
| In re Application of | : | |
| James COLEGROVE et al. | : | DECISION ON PETITION |
| Application No. 12/979,606 | : | TO MAKE SPECIAL UNDER |
| Filed: December 28, 2010 | : | THE GREEN TECHNOLOGY |
| Attorney Docket No. CU-7874 DCB | : | PILOT PROGRAM |

This is a decision on the petition under 37 CFR 1.102, filed December 28, 2010 to make the above-identified application special under the pilot program for applications pertaining to Green Technologies as set forth in 74 Federal Register Notice 64666 (December 8, 2009) and amended by 75 Federal Register Notice 28554 (May 21, 2010) and 75 Federal Register Notice 69049 (November 10, 2010).

The petition is **DISMISSED**.

If reconsideration of this decision is desired, a petition for reconsideration must be filed within ONE (1) MONTH OR THIRTY (30) DAYS from the mail date of this decision, whichever is longer. No extension of this time limit can be granted under 37 CFR 1.136(a) or (b). The petition for reconsideration should include an exhaustive attempt to provide the lacking item(s) noted below, since, after a decision on the petition for reconsideration, no further reconsideration or review of the matter will be undertaken by the Director.

A grantable petition to make an application special under 37 CFR 1.102 and the pilot program as set forth in 74 FR 64666 must be directed to a nonprovisional application filed under 35 USC 111(a) or be a national stage entry under 35 USC 371, exclusive of any reissue applications.

In order to qualify for special status, the following requirements must be met. 1) The application must have no more than 3 independent claims and no more than 20 total claims. 2) The application must not contain any multiple dependent claims. 3) The petition must state the basis for seeking special status, i.e., the claimed invention either: A) materially enhances the quality of the environment or B) materially contributes to: i) the discovery or development of renewable energy resources, ii) the more efficient utilization and conservation of energy resources, or iii) greenhouse gas emission reduction. 4) If the disclosure is not clear on its face that the claimed invention materially contributes under category (A) or (B), the petition must be accompanied by a statement by the applicant, assignee, or an attorney/agent registered to practice before the

Office explaining how the materiality standard is met. 5) A statement that applicant will agree to make an election without traverse in a telephonic interview if a restriction requirement is made by the examiner. 6) The petition to make special must be filed electronically. 7) The petition must be filed at least one day prior to the date that a first Office Action appears in the Patent Application Information Retrieval (PAIR) system. 8) The petition must be accompanied by a request for early publication in compliance with 37 CFR 1.219 and include the publication fee as set forth in 37 CFR 1.18(d).

The requirement for a fee for consideration of the petition to make special for applications pertaining to Green Technologies has been waived.

The petition lacks items 3, 4.

In regard to item 3, petitioner should note that the instant petition fails to state the basis for the special status (i.e., whether the instant invention (1) materially enhances the quality of the environment or materially contributes to (2) development of renewable energy resources or energy conservation, or (3) greenhouse gas reduction) as required by sections II and III of the notice.

In regard to item 4, petitioner should note that the instant petition includes a statement identifying the basis for the special status (i.e., whether the instant invention (1) materially enhances the quality of the environment or materially contributes to (2) development of renewable energy resources or energy conservation, or (3) greenhouse gas reduction) as required by sections II and III of the notice. However, as stated in the notice, applicant must also provide a statement pertaining to the materiality standard if the application disclosure is not clear on its face as to the materiality of the basis for the special status of the invention. This petition lacks such a statement and it is not agreed that the application on its face meets that materiality standard.

Any reconsideration of this decision should be submitted through the USPTO electronic filing system, EFS-Web, and selecting the document description of "Petition for Green Tech Pilot" on the EFS-Web screen.

Telephone inquiries concerning this decision should be directed to Lanna Mai at 571-272-6867.

The application is being forwarded to the Technology Center Art Unit 3617 for action in its regular turn.

/Lanna Mai/

---

Lanna Mai
Quality Assurance Specialist
Technology Center 3600

**IN THE UNITED STATES PATENT AND TRADEMARK OFFICE**

| | | |
|---|---|---|
| **In re Application of:** | ) | |
| **Ashfaqul Islam CHOWDHURY** | ) | **Exr:** |
| | ) | |
| **Serial No.: 12/979611** | ) | **Art Unit:** |
| | ) | |
| **Filing Date: 28 December 2010** | ) | |
| | ) | **Atty Docket No.:** |
| **For: TRANSPARENT THERMALLY CONDUCTIVE POLYMER COMPOSITES FOR LIGHT SOURCE THERMAL MANAGEMENT** | ) | **241019-2 US** |

Commissioner for Patents
P.O. Box 1450
Alexandria, VA 22313-1450

**Statement Concerning the Basis for the Special Status**

SIR:

Applicant respectfully submits that Special Status is sought on the basis that the present invention materially contributes to energy conservation.

The undersigned Patent Agent may be contacted at the number below to facilitate the resolution of any matters. Please charge any fees that are incurred in connection with this Statement to Deposit Account no. 09-0470.

Respectfully submitted,

By: /ptd47323/
Peter T. DiMauro, Reg. No. 47323
Patent Agent for Assignee
GE Lighting Solutions, LLC

Date: 08 June 2011

GE Global Patent Operation
Two Corporate Drive, Suite 648
Shelton, CT 06484
(203) 944-6711

**Doc Code: PET.GREEN**
**Document Description: Petition for Green Tech Pilot**

PTO/SB/420 (03-11)

## PETITION TO MAKE SPECIAL UNDER THE GREEN TECHNOLOGY PILOT PROGRAM

| Attorney Docket Number: 241019-2 | Application Number (if known): 12/979611 | Filing date: 28 December 2010 |
|---|---|---|

First Named Inventor: Ashfaqul Islam CHOWDHURY

Title: TRANSPARENT THERMALLY CONDUCTIVE POLYMER COMPOSITES FOR LIGHT SOURCE THERMAL MANAGEMENT

**APPLICANT HEREBY REQUESTS TO PARTICIPATE IN THE GREEN TECHNOLOGY PILOT PROGRAM FOR THE ABOVE-IDENTIFIED APPLICATION.** **See Instruction Sheet on page 2.**

This petition must be timely filed electronically using the USPTO electronic filing system, EFS-Web.

1. By filing this petition:

   **Applicant is requesting early publication: Applicant hereby requests early publication under 37 CFR 1.219 and the publication fee set forth in 37 CFR 1.18(d) accompanies this request.**

2. By filing this petition: applicant is agreeing to make an election without traverse in a telephonic interview and elect an invention that meets the eligibility requirements for the Green Technology Pilot Program, if the Office determines that the claims are not obviously directed to a single invention. See Instruction Sheet.

3. This request is accompanied by statements of special status for the eligibility requirement.

4. The application contains no more than three (3) independent claims and twenty (20) total claims.

5. The application does not contain any multiple dependent claims.

6. Other attachments: Statement Concerning Basis for Special Status

| Signature /ptd47323/ | Date 08 June 2011 |
|---|---|
| Name (Print/Typed) Peter T. DiMauro | Registration Number 47323 |

*Note: Signatures of all the inventors or assignees of record of the entire interest or their representative(s) are required in accordance with 37 CFR 1.33 and 11.18. Please see 37 CFR 1.4(d) for the form of the signature. If necessary, submit multiple forms for more than one signature, see below*.*

☐ *Total of..... forms are submitted.

*If you need assistance in completing the form, call 1-800-PTO-9199 and select option 2.*

# Instruction Sheet for
# Petition to Make Special Under the Green Technology Pilot Program

(Not to be Submitted to the USPTO)

***The following is a summary of the requirements (for more information see the notices (i) "Pilot Program for Green Technologies Including Greenhouse Gas Reduction," (ii) "Elimination of Classification Requirement in the Green Technology Pilot Program," and (iii) "Expansion and Extension of the Green Technology Pilot Program," available on the USPTO web site at http://www.uspto.gov/patents/init_events/green_tech.jsp):***

(1) The application must be a non-reissue, non-provisional utility application filed under 35 U.S.C. 111(a), or an international application that has entered the national stage in compliance with 35 U.S.C. 371, irrespective of the filing date of the application. Reexamination proceedings are excluded from this pilot program.

(2) The application must contain three or fewer independent claims and twenty or fewer total claims. The application must not contain any multiple dependent claims. For an application that contains more than three independent claims or twenty total claims, or multiple dependent claims, applicant must file a preliminary amendment in compliance with 37 CFR 1.121 to cancel the excess claims and/or the multiple dependent claims at the time the petition to make special is filed.

(3) The claims must be directed to a single invention that materially enhances the quality of the environment, or that materially contributes to: (1) the discovery or development of renewable energy resources; (2) the more efficient utilization and conservation of energy resources; or (3) green house gas emission reduction (see the eligibility requirements of sections II and III of the notice (i) cited above). The petition must include a statement that, if the USPTO determines that the claims are directed to multiple inventions (e.g., in a restriction requirement), applicant will agree to make an election without traverse in a telephonic interview, and elect an invention that meets the eligibility requirements in section II or III of the notice (i) cited above.

(4) The petition to make special must be timely filed electronically using the USPTO electronic filing system, EFS-Web, and selecting the document description of "Petition for Green Tech Pilot" on the EFS-Web screen. Applicant should use form PTO/SB/420, which is available as a Portable Document Format (PDF) fillable form in EFS-Web and on the USPTO Web site.

(5) The petition to make special must be filed at least one day prior to the date that a first Office action (which may be an Office action containing only a restriction requirement) appears in the Patent Application Information Retrieval (PAIR) system. Applicant may check the status of the application using PAIR.

(6) The petition to make special must be accompanied by a request for early publication in compliance with 37 CFR 1.219 and the publication fee set forth in 37 CFR 1.18(d).

# Privacy Act Statement

The **Privacy Act of 1974 (P.L. 93-579)** requires that you be given certain information in connection with your submission of the attached form related to a patent application or patent. Accordingly, pursuant to the requirements of the Act, please be advised that: (1) the general authority for the collection of this information is 35 U.S.C. 2(b)(2); (2) furnishing of the information solicited is voluntary; and (3) the principal purpose for which the information is used by the U.S. Patent and Trademark Office is to process and/or examine your submission related to a patent application or patent. If you do not furnish the requested information, the U.S. Patent and Trademark Office may not be able to process and/or examine your submission, which may result in termination of proceedings or abandonment of the application or expiration of the patent.

The information provided by you in this form will be subject to the following routine uses:

1. The information on this form will be treated confidentially to the extent allowed under the Freedom of Information Act (5 U.S.C. 552) and the Privacy Act (5 U.S.C 552a). Records from this system of records may be disclosed to the Department of Justice to determine whether disclosure of these records is required by the Freedom of Information Act.
2. A record from this system of records may be disclosed, as a routine use, in the course of presenting evidence to a court, magistrate, or administrative tribunal, including disclosures to opposing counsel in the course of settlement negotiations.
3. A record in this system of records may be disclosed, as a routine use, to a Member of Congress submitting a request involving an individual, to whom the record pertains, when the individual has requested assistance from the Member with respect to the subject matter of the record.
4. A record in this system of records may be disclosed, as a routine use, to a contractor of the Agency having need for the information in order to perform a contract. Recipients of information shall be required to comply with the requirements of the Privacy Act of 1974, as amended, pursuant to 5 U.S.C. 552a(m).
5. A record related to an International Application filed under the Patent Cooperation Treaty in this system of records may be disclosed, as a routine use, to the International Bureau of the World Intellectual Property Organization, pursuant to the Patent Cooperation Treaty.
6. A record in this system of records may be disclosed, as a routine use, to another federal agency for purposes of National Security review (35 U.S.C. 181) and for review pursuant to the Atomic Energy Act (42 U.S.C. 218(c)).
7. A record from this system of records may be disclosed, as a routine use, to the Administrator, General Services, or his/her designee, during an inspection of records conducted by GSA as part of that agency's responsibility to recommend improvements in records management practices and programs, under authority of 44 U.S.C. 2904 and 2906. Such disclosure shall be made in accordance with the GSA regulations governing inspection of records for this purpose, and any other relevant (*i.e.*, GSA or Commerce) directive. Such disclosure shall not be used to make determinations about individuals.
8. A record from this system of records may be disclosed, as a routine use, to the public after either publication of the application pursuant to 35 U.S.C. 122(b) or issuance of a patent pursuant to 35 U.S.C. 151. Further, a record may be disclosed, subject to the limitations of 37 CFR 1.14, as a routine use, to the public if the record was filed in an application which became abandoned or in which the proceedings were terminated and which application is referenced by either a published application, an application open to public inspection or an issued patent.
9. A record from this system of records may be disclosed, as a routine use, to a Federal, State, or local law enforcement agency, if the USPTO becomes aware of a violation or potential violation of law or regulation.

UNITED STATES PATENT AND TRADEMARK OFFICE

UNITED STATES DEPARTMENT OF COMMERCE
United States Patent and Trademark Office
Address: COMMISSIONER FOR PATENTS
P.O. Box 1450
Alexandria, Virginia 22313-1450
www.uspto.gov

| APPLICATION NO. | FILING DATE | FIRST NAMED INVENTOR | ATTORNEY DOCKET NO. | CONFIRMATION NO. |
|---|---|---|---|---|
| 12/979,611 | 12/28/2010 | Ashfaqul Islam Chowdhury | 241019/GLOZ200547US01 | 3322 |

74495 7590 06/20/2011
FAY SHARPE LLP/GE LIGHTING SOLUTIONS, LLC
1228 Euclid Avenue, 5th Floor
The Halle Building
Cleveland, OH 44115-1843

| EXAMINER |
|---|
| PATEL, NIMESHKUMAR D |

| ART UNIT | PAPER NUMBER |
|---|---|
| 2879 | |

| MAIL DATE | DELIVERY MODE |
|---|---|
| 06/20/2011 | PAPER |

**Please find below and/or attached an Office communication concerning this application or proceeding.**

The time period for reply, if any, is set in the attached communication.

UNITED STATES PATENT AND TRADEMARK OFFICE

Commissioner for Patents
United States Patent and Trademark Office
P.O. Box 1450
Alexandria, VA 22313-1450
www.uspto.gov

FAY SHARPE LLP/GE LIGHTING SOLUTIONS, LLC
1228 Euclid Avenue, 5th Floor
The Halle Building
Cleveland OH 44115-1843

| | | |
|---|---|---|
| In re Application of | : | |
| CHOWDHURY et al. | : | DECISION ON PETITION |
| Application No. 12/979, 611 | : | TO MAKE SPECIAL UNDER |
| Filed: December 28, 2010 | : | THE GREEN TECHNOLOGY |
| Attorney Docket No. 241019/GLOZ200547US01 | : | PILOT PROGRAM |

This is a decision on the petition under 37 CFR 1.102, filed on June 08, 2011, to make the above-identified application special under the pilot program for applications pertaining to Green Technologies as set forth 74 Federal Register Notice 64666 (December 8, 2009) and amended by 75 Federal Register Notice 28554 (May 21, 2010) and 75 Federal Register Notice 69049 (November 10, 2010).

The petition is **GRANTED**.

A grantable petition to make an application special under 37 CFR 1.102 and the pilot program as set forth in 74 FR 64666 must be directed to a nonprovisional application filed under 35 USC 111(a) or be a national stage entry under 35 USC 371, exclusive of any reissue applications.

In order to qualify for special status, the following requirements must be met. 1) The application must have no more than 3 independent claims and no more than 20 total claims. 2) The application must not contain any multiple dependent claims. 3) The petition must state the basis for seeking special status, i.e., the claimed invention either: A) materially enhances the quality of the environment or B) materially contributes to: i) the discovery or development of renewable energy resources, ii) the more efficient utilization and conservation of energy resources, or iii) greenhouse gas emission reduction. 4) If the disclosure is not clear on its face that the claimed invention materially contributes under category (A) or (B), the petition must be accompanied by a statement by the applicant, assignee, or an attorney/agent registered to practice before the Office explaining how the materiality standard is met. 5) A statement that applicant will agree to make an election without traverse in a telephonic interview if a restriction requirement is made by the examiner. 6) The petition to make special must be filed electronically. 7) The petition must be filed at least one day prior to the date that a first Office Action appears in the Patent Application Information Retrieval (PAIR) system. 8) The petition must be accompanied by a request for early publication in compliance with 37 CFR 1.219 and include the publication fee as set forth in 37 CFR 1.18(d).

The requirement for a fee for consideration of the petition to make special for applications pertaining to Green Technologies has been waived.

The instant petition complies with items 1 – 8 above. Accordingly, the above-identified application has been accorded "special" status.

Telephone inquires concerning this decision should be directed to Lee W. Young at 571-272-4549.

The application is being forwarded to the Technology Center Art Unit 2879 for action on the merits commensurate with this decision.

Lee W. Young
Quality Assurance Specialist
Technology Center 2800

UNITED STATES PATENT AND TRADEMARK OFFICE

Commissioner for Patents
United States Patent and Trademark Office
P.O. Box 1450
Alexandria, VA 22313-1450
www.uspto.gov

Paper No.

DOWELL & DOWELL P.C.
103 Oronoco St.
Suite 220
Alexandria VA 22314

MAILED
OCT 11 2011
OFFICE OF PETITIONS

| | | |
|---|---|---|
| In re Application of | : | |
| Eric Smith, Daniel Williams | : | DECISION REFUSING STATUS |
| Troy Schultz and Peter Schweitzer | : | UNDER 37 CFR 1.47(a) |
| Application No. 12/979,693 | : | |
| Filed: December 28, 2010 | : | |
| Attorney Docket No. 17497CON | : | |

This is a decision on the "PETITION UNDER 37 C.F.R. § 1.47 INVENTOR CANNOT BE REACHED" filed July 18, 2011.

The petition is **DISMISSED**.

Rule 47 applicant is given **TWO MONTHS** from the mailing date of this decision to reply, correcting the below-noted deficiencies. Any reply should be entitled "Request for Reconsideration of Petition Under 37 C.F.R. §1.47(a)," and should only address the deficiencies noted below, except that the reply may include an oath or declaration executed by the non-signing inventors. Failure to respond will result in abandonment of the application. Any extensions of time will be governed by 37 C.F.R. § 1.136(a).

The above-identified application was filed on December 28, 2010, with an application data sheet, but without an executed oath or declaration. Accordingly, on January 19, 2011, the Office mailed a Notice of Missing Parts of Nonprovisional Application, requiring an executed oath or declaration and the late surcharge (and requiring the statutory basic filing fee, claim fees and additional filing fees).

In response, applicants timely filed the instant petition (and petition fee) and late charge. The petition fee of $200 was charged to the Deposit Account as authorized. The petition includes a declaration executed by joint inventors Smith, Schultz and Schweitzer on behalf of themselves and on behalf of nonsigning joint inventor Williams. Applicants assert that status under 1.47 is proper as the available joint inventors have not been able to reach inventor Williams.

A grantable petition under 37 C.F.R. § 1.47(a) requires: (1) proof that the non-signing inventor cannot be reached or found, after diligent effort, or refuses to sign the oath or declaration after having been presented with the application papers (specification, claims and drawings); (2) an acceptable oath or declaration in compliance with 35 U.S.C. §§115 and 116; (3) the petition fee; and (4) a statement of the last known address of the non-signing inventor.

The petition includes an acceptable declaration, the petition fee and a statement of the last known address of inventor Williams. However, applicants have not made an adequate showing that inventor Williams could not be reached or found after diligent effort to join in the application.

Applicants have not submitted adequate proof that inventor Williams cannot be reached or found after diligent effort. The proof submitted shows only that the mailing to the nonsigning inventor was returned as undeliverable. The reference to the last known address being used successfully in a parent application is not confirmed. Likewise, absent a response from the inventor, the evidence showing that the email was sent to the inventor is not sufficient to show that the inventor received the email, and that the inventor was able to read the message and open the attachments. In order to have the necessary proof required under 37 CFR § 1.47 that the inventor cannot be reached after diligent effort, applicants should submit details of the additional efforts to reach or locate the non-signing inventor in an affidavit or declaration of facts by a person with firsthand knowledge of the details <u>and</u> submit documentary evidence such as the results of any Internet searches or public record searches.

If the inventor is found, then the application papers should be presented to the inventor for signature. In order for the petition to be granted in such case, the renewed petition should

include adequate proof of a refusal. Of course, inventor Williams's joinder in the application is a proper response to this dismissal.

Further correspondence with respect to this matter should be addressed as follows:

By mail: Mail Stop Petition
Commissioner for Patents
P.O. Box 1450
Alexandria, VA 22313-1450

By FAX: (571) 273-8300
Attn: Office of Petitions
ATTN: NANCY JOHNSON

By hand: Customer Service Window
Randolph Building
401 Dulany Street
Alexandria, VA 22314

Telephone inquiries related to this decision may be directed to the undersigned at (571) 272-3219.

Nancy Johnson
Senior Petitions Attorney
Office of Petitions

UNITED STATES PATENT AND TRADEMARK OFFICE

Commissioner for Patents
United States Patent and Trademark Office
P.O. Box 1450
Alexandria, VA 22313-1450
www.uspto.gov

DOWELL & DOWELL P.C.
103 Oronoco St.
Suite 220
Alexandria VA 22314

MAILED

APR 17 2012

OFFICE OF PETITIONS

| | | |
|---|---|---|
| In re Application of | : | |
| Eric Smith, Daniel Williams | : | |
| Troy Schultz and Peter Schweitzer | : | DECISION NOTING JOINDER |
| Application No. 12/979,693 | : | OF INVENTOR AND PETITION |
| Filed: December 28, 2010 | : | UNDER 37 CFR 1.47(a) MOOT |
| Attorney Docket No. 17497CON | : | |

This is in response to the "REQUEST FOR RECONSIDERATION OF PETITION" filed April 11, 2012.

The petition is **DISMISSED AS MOOT**.

The above-identified application was filed on December 28, 2010, without an executed oath or declaration. In response to the Notice to File Missing Parts of Nonprovisional Application mailed January 19, 2011, on October 11, 2011, applicants filed the initial petition under § 1.47(a) on the basis that the available joint inventors have not been able to reach inventor Williams to have him join in the application. By decision mailed October 11, 2011, the petition was dismissed for failure to submit adequate proof that the non-signing inventor cannot be reached or found, after diligent effort.

On instant renewed petition, applicants have submitted a declaration executed by previously non-signing inventor Williams. This request for reconsideration was made timely by an accompanying petition and fee for extension of time for response within the fourth month.

The declaration filed April 11, 2012 has been reviewed and found in compliance with 37 CFR 1.63.

In view of the joinder of the inventor, further consideration under 37 CFR 1.47(a) is not necessary and the petition is considered moot. This application does not have any Rule 1.47(a) status and no such status should appear on the file wrapper. This application need not be returned to this Office for further consideration under 37 CFR 1.47(a).

This application will be examined in due course.

Telephone inquiries related to this decision should be directed to the undersigned at (571) 272-3219.

/Nancy Johnson/

Nancy Johnson
Senior Petitions Attorney
Office of Petitions

UNITED STATES PATENT AND TRADEMARK OFFICE

UNITED STATES DEPARTMENT OF COMMERCE
United States Patent and Trademark Office
Address: COMMISSIONER FOR PATENTS
P.O. Box 1450
Alexandria, Virginia 22313-1450
www.uspto.gov

| APPLICATION NO. | FILING DATE | FIRST NAMED INVENTOR | ATTORNEY DOCKET NO. | CONFIRMATION NO. |
|---|---|---|---|---|
| 12/979,728 | 12/28/2010 | Takahiko OKABE | P4961US00 | 3525 |

89453 7590 03/17/2011
Ditthavong Mori & Steiner, P.C.
918 Prince Street
Alexandria, VA 22314

| EXAMINER |
|---|

| ART UNIT | PAPER NUMBER |
|---|---|
| 1774 | |

| NOTIFICATION DATE | DELIVERY MODE |
|---|---|
| 03/17/2011 | ELECTRONIC |

**Please find below and/or attached an Office communication concerning this application or proceeding.**

The time period for reply, if any, is set in the attached communication.

Notice of the Office communication was sent electronically on above-indicated "Notification Date" to the following e-mail address(es):

osakadocket@dcpatent.com

UNITED STATES PATENT AND TRADEMARK OFFICE

Commissioner for Patents
United States Patent and Trademark Office
P.O. Box 1450
Alexandria, VA 22313-1450
www.uspto.gov

CST

March 16, 2011

| | | |
|---|---|---|
| In re application of<br>Takahiko Okabe<br>Serial No. 12/979,728<br>Filed: December 28, 2010<br>For: HOLDING SEALING MATERIAL, METHOD FOR ROLLING HOLDING SEALING MATERIAL, AND EXHAUST GAS PURIFYING APPARATUS | : | DECISION ON REQUEST TO PARTICIPATE IN PATENT PROSECUTION HIGHWAY PILOT PROGRAM AND PETITION TO MAKE SPECIAL UNDER 37 CFR 1.102(a) |

This is a decision on the request to participate in the Patent Prosecution Highway (PPH) program filed December 28, 2010.

The request and petition are **DISMISSED**.

A grantable request to participate in the PPH program and petition to make special require:

(1) The U.S. application must validly claim priority under 35 U.S.C. 119(a) to one or more applications filed in the EPO, note where the EPO application with similar claims is not the same application from which the U.S. application claims priority that the applicant must identify the relationship between the EPO application with similar claims and the EPO priority application;

(2) Applicant must submit a copy of the allowable/patentable claim(s) from the EPO application(s);

(3) Applicant must ensure that all the claims in the U.S. application must sufficiently correspond or be amended to sufficiently correspond to the allowable/patentable claim(s) in the EPO application(s);

(4) Examination of the U.S. application has not begun;

(5) Applicant must submit a copy of all the office action from each of the EPO application(s) containing the allowable claims that are the basis for the request; and

(6) Applicant must submit:

a. An IDS listing the documents cited by the EPO examiner in the EPO office action (unless already submitted in this application) and
b. Copies of documents except U.S. patents or U.S. patent application publications (unless already submitted in this application).

The request to participate in the PPH program and petition fail because:

(3) Applicant must ensure that all the claims in the U.S. application must sufficiently correspond or be amended to sufficiently correspond to the allowable/patentable claim(s) in the EPO application(s).

Claim 7 of the EPO application recites the limitation that "the short side substantially perpendicular to Long side A is Short side F" whereas Claim 7 of the present application recites the limitation that "the short side substantially perpendicular to Long side E is Short side F".

Applicant is given a time period of **ONE MONTH OR THIRTY DAYS**, whichever is longer, from the mailing date of this decision to correct the deficiencies. **NO EXTENSION OF TIME UNDER 37 CFR 1.136 IS PERMITTED.** If the deficiencies are not corrected within the time period given, the application with await action in its regular turn.

Any inquiry regarding this decision should be directed to Christine Tierney, Quality Assurance Specialist, at (571) 272-1055.

All other inquiries concerning the examination or status of the application is accessible in the PAIR system at http://www.uspto.gov/ebc/index.html.

/Christine Tierney/

Christine Tierney
Quality Assurance Specialist
Technology Center 1700

UNITED STATES PATENT AND TRADEMARK OFFICE

UNITED STATES DEPARTMENT OF COMMERCE
United States Patent and Trademark Office
Address: COMMISSIONER FOR PATENTS
P.O. Box 1450
Alexandria, Virginia 22313-1450
www.uspto.gov

| APPLICATION NO. | FILING DATE | FIRST NAMED INVENTOR | ATTORNEY DOCKET NO. | CONFIRMATION NO. |
|---|---|---|---|---|
| 12/979,728 | 12/28/2010 | Takahiko OKABE | P4961US00 | 3525 |

89453 7590 04/13/2011
Ditthavong Mori & Steiner, P.C.
918 Prince Street
Alexandria, VA 22314

| EXAMINER |
|---|

| ART UNIT | PAPER NUMBER |
|---|---|
| 1774 | |

| NOTIFICATION DATE | DELIVERY MODE |
|---|---|
| 04/13/2011 | ELECTRONIC |

**Please find below and/or attached an Office communication concerning this application or proceeding.**

The time period for reply, if any, is set in the attached communication.

Notice of the Office communication was sent electronically on above-indicated "Notification Date" to the following e-mail address(es):

osakadocket@dcpatent.com

UNITED STATES PATENT AND TRADEMARK OFFICE

Commissioner for Patents
United States Patent and Trademark Office
P.O. Box 1450
Alexandria, VA 22313-1450
www.uspto.gov

CST

April 12, 2011

| | | |
|---|---|---|
| In re application of<br>Takahiko Okabe<br>Serial No. 12/979,728<br>Filed: December 28, 2010<br>For: HOLDING SEALING MATERIAL, METHOD FOR ROLLING HOLDING SEALING MATERIAL, AND EXHAUST GAS PURIFYING APPARATUS | : | DECISION ON REQUEST TO PARTICIPATE IN PATENT PROSECUTION HIGHWAY PILOT PROGRAM AND PETITION TO MAKE SPECIAL UNDER 37 CFR 1.102(a) |

This is a decision on the supplemental request to participate in the Patent Prosecution Highway (PPH) program filed April 6, 2011.

The request and petition are **GRANTED**.

A grantable request to participate in the PPH program and petition to make special require:

(1) The U.S. application must validly claim priority under 35 U.S.C. 119(a) to one or more applications filed in the EPO, note where the EPO application with similar claims is not the same application from which the U.S. application claims priority that the applicant must identify the relationship between the EPO application with similar claims and the EPO priority application;

(2) Applicant must submit a copy of the allowable/patentable claim(s) from the EPO application(s);

(3) Applicant must ensure that all the claims in the U.S. application must sufficiently correspond or be amended to sufficiently correspond to the allowable/patentable claim(s) in the EPO application(s);

(4) Examination of the U.S. application has not begun;

(5) Applicant must submit a copy of all the office action from each of the EPO application(s) containing the allowable claims that are the basis for the request; and

(6) Applicant must submit:
   a. An IDS listing the documents cited by the EPO examiner in the EPO office action (unless already submitted in this application) and
   b. Copies of documents except U.S. patents or U.S. patent application publications (unless already submitted in this application).

The request to participate in the PPH program and petition comply with the above requirements. Accordingly, the above-identified application has been accorded "special" status.

The application is being forwarded to the examiner for action on the merits commensurate with this decision.

Any inquiry regarding this decision should be directed to Christine Tierney, Quality Assurance Specialist, at (571) 272-1055.

All other inquiries concerning the examination or status of the application is accessible in the PAIR system at http://www.uspto.gov/ebc/index.html.

/Christine Tierney/

Christine Tierney
Quality Assurance Specialist
Technology Center 1700

**IN THE UNITED STATES PATENT AND TRADEMARK OFFICE**

| | |
|---|---|
| **First Named Inventor: Stephen Bertram JOHNSON** | ) |
| **Confirmation No.: 3548** | ) |
| | ) |
| **Serial No.: 12/979,741** | ) |
| | ) |
| **Filing Date: 12-28-2010** | ) |
| | ) |
| **Atty Docket No.: 247769-1 (22402-260)** | ) |

Commissioner for Patents
P.O. Box 1450
Alexandria, VA 22313-1450

**Statement Concerning the Basis for the Special Status**

SIR:

Applicant respectfully submits that Special Status is sought on the basis that the present invention materially contributes to the development of renewable energy resources or energy conservation.

Applicant respectfully submits that the present invention is directed to lattice towers which may be used for wind turbines. The size of rotor blades is a factor that contributes to the energy efficiency of wind turbines. An increase in rotor blade size increases the energy production of a wind turbine. Accordingly, efforts to increase rotor blade size aid in the continuing growth of wind turbine technology and the adoption of wind energy as an alternative energy source.

As the size of wind turbines increase, particularly the size of rotor blades, so does the size of the tower required to support the wind turbine. At least some known wind turbine towers, such as tubular towers, are constructed from sheets of steel rolled into "cans". Adjacent cans are subsequently welded together to form a tubular tower. However, as the need for higher tower heights has

increased, the need to use stronger and thicker materials in the base of these towers has also increased significantly. Occasionally, the need for materials having an increased strength and/or thickness can be mitigated by constructing the tower structure with a base having an increased diameter. However, due to transportation limitations, there is a maximum practical diameter for the cans used in a tubular tower. As such, the height of the tower may be limited by the size of the components that can be used in light of transportation limitations. (see at least paragraph [0003]).

Other known towers that can be assembled in the field, such as lattice towers, offer certain advantages over tubular towers. The dimensions necessary for lattice towers can be optimized without regard to logistics costs, since such towers are assembled in the field. As such, the diameter of the base of a lattice tower can be fabricated to be as large as desired. However, it is generally more expensive to assemble a lattice tower in the field than to assemble a tubular tower in a factory. Moreover, assembling a lattice tower in the field generally takes more time than assembling a tubular tower in a factory. In addition, because of the weight, awkwardness, and unwieldiness of the lattice tower components, assembling a lattice tower in the field may be more difficult and complex than assembling a tubular tower. (see at least paragraph [0004]).

Thus, the economic benefits of increased wind turbine sizes must be weighed against the transportation limitations of tubular towers and the expense of assembling lattice towers in the field.

The embodiments described in the present invention facilitate the assembly of a lattice tower section, allowing for the relatively efficient assembly of a lattice tower section in the field of various diameters and heights, which in turn may enable more efficient wind turbines with larger rotor blades. By easing the known difficulties in the transportation and assembly of large wind turbine towers, the present invention materially contributes to the development of renewable energy by facilitating the production of larger wind turbines with larger rotor blades, which in turn promotes increased energy production.

The undersigned attorney may be contacted at the number below to facilitate the resolution of any matters. Please charge any fees that are incurred in connection with this Statement to deposit account no. 09-0470.

Respectfully submitted,

General Electric Company

By: /Allison W Mages/
Allison Weiner Mages
Reg. No. 57,275

Dated: August 3, 2011

GE Global Patent Operation
2 Corporate Drive, Suite 248
Shelton, CT 06484
203-944-6730

Doc Code: PET.GREEN
Document Description: Petition for Green Tech Pilot

PTO/SB/420 (03-11)

# PETITION TO MAKE SPECIAL UNDER THE GREEN TECHNOLOGY PILOT PROGRAM

| Attorney Docket Number: 247769-1 (22402-260) | Application Number (if known): 12/979,741 | Filing date: 12-28-2010 |
|---|---|---|

First Named Inventor: Stephen Bertram JOHNSON

Title: SYSTEMS AND METHOD OF ASSEMBLING A TOWER SECTION

**APPLICANT HEREBY REQUESTS TO PARTICIPATE IN THE GREEN TECHNOLOGY PILOT PROGRAM FOR THE ABOVE-IDENTIFIED APPLICATION. See Instruction Sheet on page 2.**

This petition must be timely filed electronically using the USPTO electronic filing system, EFS-Web.

1. By filing this petition:

   **Applicant is requesting early publication: Applicant hereby requests early publication under 37 CFR 1.219 and the publication fee set forth in 37 CFR 1.18(d) accompanies this request.**

2. By filing this petition: applicant is agreeing to make an election without traverse in a telephonic interview and elect an invention that meets the eligibility requirements for the Green Technology Pilot Program, if the Office determines that the claims are not obviously directed to a single invention. See Instruction Sheet.

3. This request is accompanied by statements of special status for the eligibility requirement.

4. The application contains no more than three (3) independent claims and twenty (20) total claims.

5. The application does not contain any multiple dependent claims.

6. Other attachments: Statement Concerning the Basis for the Special Status

| Signature /Allison W. Mages/ | Date July 29, 2011 |
|---|---|
| Name (Print/Typed) Allison W. Mages | Registration Number 57,275 |

*Note: Signatures of all the inventors or assignees of record of the entire interest or their representative(s) are required in accordance with 37 CFR 1.33 and 11.18. Please see 37 CFR 1.4(d) for the form of the signature. If necessary, submit multiple forms for more than one signature, see below*.*

☐ *Total of _____ forms are submitted.

*If you need assistance in completing the form, call 1-800-PTO-9199 and select option 2.*

UNITED STATES PATENT AND TRADEMARK OFFICE

UNITED STATES DEPARTMENT OF COMMERCE
United States Patent and Trademark Office
Address: COMMISSIONER FOR PATENTS
P.O. Box 1450
Alexandria, Virginia 22313-1450
www.uspto.gov

| APPLICATION NO. | FILING DATE | FIRST NAMED INVENTOR | ATTORNEY DOCKET NO. | CONFIRMATION NO. |
|---|---|---|---|---|
| 12/979,741 | 12/28/2010 | Stephen Bertram Johnson | 247769-1 (22402-260) | 3548 |

45432 7590 08/11/2011
PATRICK W. RASCHE (22402)
ARMSTRONG TEASDALE LLP
7700 Forsyth Boulevard
Suite 1800
St. Louis, MO 63105

| EXAMINER |
|---|

| ART UNIT | PAPER NUMBER |
|---|---|
| 3726 | |

| NOTIFICATION DATE | DELIVERY MODE |
|---|---|
| 08/11/2011 | ELECTRONIC |

**Please find below and/or attached an Office communication concerning this application or proceeding.**

The time period for reply, if any, is set in the attached communication.

Notice of the Office communication was sent electronically on above-indicated "Notification Date" to the following e-mail address(es):

uspatents@armstrongteasdale.com

UNITED STATES PATENT AND TRADEMARK OFFICE

Commissioner for Patents
United States Patent and Trademark Office
P.O. Box 1450
Alexandria, VA 22313-1450
www.uspto.gov

PATRICK W. RASCHE (22402)
ARMSTRONG TEASDALE LLP
7700 Forsyth Boulevard
Suite 1800
St. Louis MO 63105

| | | |
|---|---|---|
| In re Application of | : | |
| JOHNSON, STEPHEN BERTRAM . et al | : | DECISION ON PETITION |
| Application No. 12/979,741 | : | TO MAKE SPECIAL UNDER |
| Filed: December 28, 2010 | : | THE GREEN TECHNOLOGY |
| Attorney Docket No. 247769-1 (22402-260) | : | PILOT PROGRAM |

This is a decision on the renewed petition under 37 CFR 1.102, filed August 03, 2011 to make the above-identified application special under the pilot program for applications pertaining to Green Technologies as set forth in 74 Federal Register Notice 64666 (December 8, 2009) and amended by 75 Federal Register Notice 28554 (May 21, 2010) and 75 Federal Register Notice 69049 (November 10, 2010).

The petition is **granted.**

A grantable petition to make an application special under 37 CFR 1.102 and the pilot program as set forth in 74 FR 64666 must be directed to a nonprovisional application filed under 35 USC 111(a) or be a national stage entry under 35 USC 371, exclusive of any reissue applications.

In order to qualify for special status, the following requirements must be met. 1) The application must have no more than 3 independent claims and no more than 20 total claims. 2) The application must not contain any multiple dependent claims. 3) The petition must state the basis for seeking special status, i.e., the claimed invention either: A) materially enhances the quality of the environment or B) materially contributes to: i) the discovery or development of renewable energy resources, ii) the more efficient utilization and conservation of energy resources, or iii) greenhouse gas emission reduction. 4) If the disclosure is not clear on its face that the claimed invention materially contributes under category (A) or (B), the petition must be accompanied by a statement by the applicant, assignee, or an attorney/agent registered to practice before the Office explaining how the materiality standard is met. 5) A statement that applicant will agree to make an election without traverse in a telephonic interview if a restriction requirement is made by the examiner. 6) The petition to make special must be filed electronically. 7) The petition must be filed at least one day prior to the date that a first Office Action appears in the Patent Application Information Retrieval (PAIR) system. 8) The petition must be accompanied by a request for early publication in compliance with 37 CFR 1.219 and include the publication fee as set forth in 37 CFR 1.18(d).

The requirement for a fee for consideration of the petition to make special for applications pertaining to Green Technologies has been waived.

The instant petition complies with items 1 – 8 above. Accordingly, the above-identified application has been accorded "special" status.

Telephone inquires concerning this decision should be directed to Henry C. Yuen at 571-272-4856.

This application will be forwarded to the Technology Center Art Unit 3726 for action on the merits commensurate with this decision.

/Henry C. Yuen/

Henry C. Yuen
Quality Assurance Specialist
Technology Center TC 3700

UNITED STATES PATENT AND TRADEMARK OFFICE

Commissioner for Patents
United States Patent and Trademark Office
P.O. Box 1450
Alexandria, VA 22313-1450
www.uspto.gov

BUCHANAN, INGERSOLL & ROONEY PC
POST OFFICE BOX 1404
ALEXANDRIA VA 22313-1404

**MAILED**
APR 19 2011
OFFICE OF PETITIONS

| | | |
|---|---|---|
| In re Application of | : | |
| Magnus Kunow et al. | : | |
| Application No. 12/979,761 | : | DECISION ON PETITION |
| Filed: December 28, 2010 | : | |
| Attorney Docket No. **1004501-001158** | : | |

This is a decision on the petition under 37 CFR 1.182, filed March 14, 2011, to change the order of the names of the inventors.

The petition is **GRANTED**.

Office records have been corrected to reflect the change in the order of the named inventors as follows:

Kranthi Akurati
Magnus Kunow
Andreas Zimmermann
Ron Jervis

A corrected Filing Receipt, which sets forth the desired order of the named inventors, accompanies this decision on petition.

This application is being referred to the Office Patent Application Processing (OPAP) for normal course of business.

Telephone inquiries regarding this decision should be directed to the undersigned at 571-272-4584.

JoAnne Burke
Petitions Examiner
Office of Petitions

ATTACHMENT: Corrected Filing Receipt

UNITED STATES PATENT AND TRADEMARK OFFICE

UNITED STATES DEPARTMENT OF COMMERCE
United States Patent and Trademark Office
Address: COMMISSIONER FOR PATENTS
P.O. Box 1450
Alexandria, Virginia 22313-1450
www.uspto.gov

| APPLICATION NUMBER | FILING or 371(c) DATE | GRP ART UNIT | FIL FEE REC'D | ATTY.DOCKET.NO | TOT CLAIMS | IND CLAIMS |
|---|---|---|---|---|---|---|
| 12/979,761 | 12/28/2010 | 1716 | 1272 | 1004501-001158 | 21 | 2 |

**CONFIRMATION NO. 3574**

**CORRECTED FILING RECEIPT**

21839
BUCHANAN, INGERSOLL & ROONEY PC
POST OFFICE BOX 1404
ALEXANDRIA, VA 22313-1404

*OC000000047084146*

Date Mailed: 04/12/2011

Receipt is acknowledged of this non-provisional patent application. The application will be taken up for examination in due course. Applicant will be notified as to the results of the examination. Any correspondence concerning the application must include the following identification information: the U.S. APPLICATION NUMBER, FILING DATE, NAME OF APPLICANT, and TITLE OF INVENTION. Fees transmitted by check or draft are subject to collection. Please verify the accuracy of the data presented on this receipt. **If an error is noted on this Filing Receipt, please submit a written request for a Filing Receipt Correction. Please provide a copy of this Filing Receipt with the changes noted thereon. If you received a "Notice to File Missing Parts" for this application, please submit any corrections to this Filing Receipt with your reply to the Notice. When the USPTO processes the reply to the Notice, the USPTO will generate another Filing Receipt incorporating the requested corrections**

**Applicant(s)**

Kranthi Akurati, Lenzburg, SWITZERLAND;
Magnus Kunow, Zurich, SWITZERLAND;
Andreas Zimmermann, Niederlenz, SWITZERLAND;
Ron Jervis, Suhr, SWITZERLAND;

**Assignment For Published Patent Application**

ABB Technology AG, Zurich, SWITZERLAND

**Power of Attorney:** The patent practitioners associated with Customer Number 21839

**Domestic Priority data as claimed by applicant**

This application is a CON of PCT/EP2009/058387 07/03/2009

**Foreign Applications** (You may be eligible to benefit from the **Patent Prosecution Highway** program at the USPTO. Please see http://www.uspto.gov for more information.)
EUROPEAN PATENT OFFICE (EPO) 08159693.4 07/04/2008

Request to Retrieve - This application either claims priority to one or more applications filed in an intellectual property Office that participates in the Priority Document Exchange (PDX) program or contains a proper **Request to Retrieve Electronic Priority Application(s)** (PTO/SB/38 or its equivalent). Consequently, the USPTO will attempt to electronically retrieve these priority documents.

**If Required, Foreign Filing License Granted:** 01/12/2011

The country code and number of your priority application, to be used for filing abroad under the Paris Convention, is **US 12/979,761**

**Projected Publication Date:** To Be Determined - pending completion of Missing Parts

**Non-Publication Request:** No

**Early Publication Request:** No
**Title**

Deposition Method for Passivation of Silicon Wafers

**Preliminary Class**

118

## PROTECTING YOUR INVENTION OUTSIDE THE UNITED STATES

Since the rights granted by a U.S. patent extend only throughout the territory of the United States and have no effect in a foreign country, an inventor who wishes patent protection in another country must apply for a patent in a specific country or in regional patent offices. Applicants may wish to consider the filing of an international application under the Patent Cooperation Treaty (PCT). An international (PCT) application generally has the same effect as a regular national patent application in each PCT-member country. The PCT process **simplifies** the filing of patent applications on the same invention in member countries, but **does not result** in a grant of "an international patent" and does not eliminate the need of applicants to file additional documents and fees in countries where patent protection is desired.

Almost every country has its own patent law, and a person desiring a patent in a particular country must make an application for patent in that country in accordance with its particular laws. Since the laws of many countries differ in various respects from the patent law of the United States, applicants are advised to seek guidance from specific foreign countries to ensure that patent rights are not lost prematurely.

Applicants also are advised that in the case of inventions made in the United States, the Director of the USPTO must issue a license before applicants can apply for a patent in a foreign country. The filing of a U.S. patent application serves as a request for a foreign filing license. The application's filing receipt contains further information and guidance as to the status of applicant's license for foreign filing.

Applicants may wish to consult the USPTO booklet, "General Information Concerning Patents" (specifically, the section entitled "Treaties and Foreign Patents") for more information on timeframes and deadlines for filing foreign patent applications. The guide is available either by contacting the USPTO Contact Center at 800-786-9199, or it can be viewed on the USPTO website at http://www.uspto.gov/web/offices/pac/doc/general/index.html.

For information on preventing theft of your intellectual property (patents, trademarks and copyrights), you may wish to consult the U.S. Government website, http://www.stopfakes.gov. Part of a Department of Commerce initiative, this website includes self-help "toolkits" giving innovators guidance on how to protect intellectual property in specific countries such as China, Korea and Mexico. For questions regarding patent enforcement issues, applicants may call the U.S. Government hotline at 1-866-999-HALT (1-866-999-4158).

## LICENSE FOR FOREIGN FILING UNDER

## Title 35, United States Code, Section 184

## Title 37, Code of Federal Regulations, 5.11 & 5.15

**GRANTED**

The applicant has been granted a license under 35 U.S.C. 184, if the phrase "IF REQUIRED, FOREIGN FILING LICENSE GRANTED" followed by a date appears on this form. Such licenses are issued in all applications where the conditions for issuance of a license have been met, regardless of whether or not a license may be required as set forth in 37 CFR 5.15. The scope and limitations of this license are set forth in 37 CFR 5.15(a) unless an earlier license has been issued under 37 CFR 5.15(b). The license is subject to revocation upon written notification. The date indicated is the effective date of the license, unless an earlier license of similar scope has been granted under 37 CFR 5.13 or 5.14.

This license is to be retained by the licensee and may be used at any time on or after the effective date thereof unless it is revoked. This license is automatically transferred to any related applications(s) filed under 37 CFR 1.53(d). This license is not retroactive.

The grant of a license does not in any way lessen the responsibility of a licensee for the security of the subject matter as imposed by any Government contract or the provisions of existing laws relating to espionage and the national security or the export of technical data. Licensees should apprise themselves of current regulations especially with respect to certain countries, of other agencies, particularly the Office of Defense Trade Controls, Department of State (with respect to Arms, Munitions and Implements of War (22 CFR 121-128)); the Bureau of Industry and Security, Department of Commerce (15 CFR parts 730-774); the Office of Foreign AssetsControl, Department of Treasury (31 CFR Parts 500+) and the Department of Energy.

**NOT GRANTED**

No license under 35 U.S.C. 184 has been granted at this time, if the phrase "IF REQUIRED, FOREIGN FILING LICENSE GRANTED" DOES NOT appear on this form. Applicant may still petition for a license under 37 CFR 5.12, if a license is desired before the expiration of 6 months from the filing date of the application. If 6 months has lapsed from the filing date of this application and the licensee has not received any indication of a secrecy order under 35 U.S.C. 181, the licensee may foreign file the application pursuant to 37 CFR 5.15(b).

**Doc Code: PET.GREEN**
**Document Description: Petition for Green Tech Pilot**

PTO/SB/420 (11-10)
Approved for use through 01/31/2011. OMB 0651-0062
U.S. Patent and Trademark Office; U. S. DEPARTMENT OF COMMERCE
Under the Paperwork Reduction Act of 1995, no persons are required to respond to a collection of information unless it displays a valid OMB control number.

# PETITION TO MAKE SPECIAL UNDER THE GREEN TECHNOLOGY PILOT PROGRAM

| | | |
|---|---|---|
| Attorney Docket Number: VWS-238US | Application Number (if known): 12/979,909 | Filing date: December 28, 2010 |
| First Named Inventor: Anshuman Tripathi | | |
| Title: POWER CONVERSION SYSTEM AND METHOD | | |

**APPLICANT HEREBY REQUESTS TO PARTICIPATE IN THE GREEN TECHNOLOGY PILOT PROGRAM FOR THE ABOVE-IDENTIFIED APPLICATION. See Instruction Sheet on page 2.**

This petition must be timely filed electronically using the USPTO electronic filing system, EFS-Web.

1. By filing this petition:

   **Applicant is requesting early publication: Applicant hereby requests early publication under 37 CFR 1.219 and the publication fee set forth in 37 CFR 1.18(d) accompanies this request.**

2. By filing this petition: applicant is agreeing to make an election without traverse in a telephonic interview and elect an invention that meets the eligibility requirements for the Green Technology Pilot Program, if the Office determines that the claims are not obviously directed to a single invention. See Instruction Sheet.

3. This request is accompanied by statements of special status for the eligibility requirement.

4. The application contains no more than three (3) independent claims and twenty (20) total claims.

5. The application does not contain any multiple dependent claims.

6. Other attachments: _____

| | |
|---|---|
| Signature /William R. Allen/ | Date 12-29-2010 |
| Name (Print/Typed) William R. Allen | Registration Number 48,389 |

***Note:*** *Signatures of all the inventors or assignees of record of the entire interest or their representative(s) are required in accordance with 37 CFR 1.33 and 11.18. Please see 37 CFR 1.4(d) for the form of the signature. If necessary, submit multiple forms for more than one signature see below*.*

☒ *Total of 1 forms are submitted.

The information is required to obtain or retain a benefit by the public which is to file (and by the USPTO to process) an application. Confidentiality is governed by 35 U.S.C. 122 and 37 CFR 1.11 and 1.14. This collection is estimated to take 12 hours to complete, including gathering, preparing, and submitting the completed application form to the USPTO. Time will vary depending upon the individual case. Any comments on the amount of time you require to complete this form and/or suggestions for reducing this burden, should be sent to the Chief Information Officer, U.S. Patent and Trademark Office, U.S. Department of Commerce, P.O. Box 1450, Alexandria, VA 22313-1450. DO NOT SEND FEES OR COMPLETED FORMS TO THIS ADDRESS. **SEND TO: Commissioner for Patents, P.O. Box 1450, Alexandria, VA 22313-1450.**

*If you need assistance in completing the form, call 1-800-PTO-9199 and select option 2.*

Under the Paperwork Reduction Act of 1995, no persons are required to respond to a collection of information unless it displays a valid OMB control number.

# Instruction Sheet for Petition to Make Special Under the Green Technology Pilot Program

(Not to be Submitted to the USPTO)

**The following is a summary of the requirements (for more information see the notices (i) "Pilot Program for Green Technologies Including Greenhouse Gas Reduction," (ii) "Elimination of Classification Requirement in the Green Technology Pilot Program," and (iii) "Expansion and Extension of the Green Technology Pilot Program," available on the USPTO web site at http://www.uspto.gov/patents/init_events/green_tech.jsp):**

1) The application must be a non-reissue, non-provisional utility application filed under 35 U.S.C. 111 (a), or an international application that has entered the national stage in compliance with 35 U.S.C. 371, irrespective of the filing date of the application. Reexamination proceedings are excluded from this pilot program.

2) The application must contain three or fewer independent claims and twenty or fewer total claims. The application must not contain any multiple dependent claims. For an application that contains more than three independent claims or twenty total claims, or multiple dependent claims, applicant must file a preliminary amendment in compliance with 37 CFR 1.121 to cancel the excess claims and/or the multiple dependent claims at the time the petition to make special is filed.

3) The claims must be directed to a single invention that materially enhances the quality of the environment, or that materially contributes to: (1) the discovery or development of renewable energy resources; (2) the more efficient utilization and conservation of energy resources; or (3) green house gas emission reduction (see the eligibility requirements of sections II and III of the notice (i) cited above). The petition must include a statement that, if the USPTO determines that the claims are directed to multiple inventions (e.g., in a restriction requirement), applicant will agree to make an election without traverse in a telephonic interview, and elect an invention that meets the eligibility requirements in section II or III of the notice (i) cited above.

4) The petition to make special must be timely filed electronically using the USPTO electronic filing system, EFS-Web, and selecting the document description of "Petition for Green Tech Pilot" on the EFS-Web screen. Applicant should use form PTO/SB/420, which is available as a Portable Document Format (PDF) fillable form in EFS-Web and on the USPTO Web site.

5) The petition to make special must be filed at least one day prior to the date that a first Office action (which may be an Office action containing only a restriction requirement) appears in the Patent Application Information Retrieval (PAIR) system. Applicant may check the status of the application using PAIR.

6) The petition to make special must be accompanied by a request for early publication in compliance with 37 CFR 1.219 and the publication fee set forth in 37 CFR 1.18(d).

## Privacy Act Statement

The **Privacy Act of 1974 (P.L. 93-579)** requires that you be given certain information in connection with your submission of the attached form related to a patent application or patent. Accordingly, pursuant to the requirements of the Act, please be advised that: (1) the general authority for the collection of this information is 35 U.S.C. 2(b)(2); (2) furnishing of the information solicited is voluntary; and (3) the principal purpose for which the information is used by the U.S. Patent and Trademark Office is to process and/or examine your submission related to a patent application or patent. If you do not furnish the requested information, the U.S. Patent and Trademark Office may not be able to process and/or examine your submission, which may result in termination of proceedings or abandonment of the application or expiration of the patent.

The information provided by you in this form will be subject to the following routine uses:

1. The information on this form will be treated confidentially to the extent allowed under the Freedom of Information Act (5 U.S.C. 552) and the Privacy Act (5 U.S.C 552a). Records from this system of records may be disclosed to the Department of Justice to determine whether disclosure of these records is required by the Freedom of Information Act.
2. A record from this system of records may be disclosed, as a routine use, in the course of presenting evidence to a court, magistrate, or administrative tribunal, including disclosures to opposing counsel in the course of settlement negotiations.
3. A record in this system of records may be disclosed, as a routine use, to a Member of Congress submitting a request involving an individual, to whom the record pertains, when the individual has requested assistance from the Member with respect to the subject matter of the record.
4. A record in this system of records may be disclosed, as a routine use, to a contractor of the Agency having need for the information in order to perform a contract. Recipients of information shall be required to comply with the requirements of the Privacy Act of 1974, as amended, pursuant to 5 U.S.C. 552a(m).
5. A record related to an International Application filed under the Patent Cooperation Treaty in this system of records may be disclosed, as a routine use, to the International Bureau of the World Intellectual Property Organization, pursuant to the Patent Cooperation Treaty.
6. A record in this system of records may be disclosed, as a routine use, to another federal agency for purposes of National Security review (35 U.S.C. 181) and for review pursuant to the Atomic Energy Act (42 U.S.C. 218(c)).
7. A record from this system of records may be disclosed, as a routine use, to the Administrator, General Services, or his/her designee, during an inspection of records conducted by GSA as part of that agency's responsibility to recommend improvements in records management practices and programs, under authority of 44 U.S.C. 2904 and 2906. Such disclosure shall be made in accordance with the GSA regulations governing inspection of records for this purpose, and any other relevant (*i.e.*, GSA or Commerce) directive. Such disclosure shall not be used to make determinations about individuals.
8. A record from this system of records may be disclosed, as a routine use, to the public after either publication of the application pursuant to 35 U.S.C. 122(b) or issuance of a patent pursuant to 35 U.S.C. 151. Further, a record may be disclosed, subject to the limitations of 37 CFR 1.14, as a routine use, to the public if the record was filed in an application which became abandoned or in which the proceedings were terminated and which application is referenced by either a published application, an application open to public inspection or an issued patent.
9. A record from this system of records may be disclosed, as a routine use, to a Federal, State, or local law enforcement agency, if the USPTO becomes aware of a violation or potential violation of law or regulation.

UNITED STATES PATENT AND TRADEMARK OFFICE

UNITED STATES DEPARTMENT OF COMMERCE
United States Patent and Trademark Office
Address: COMMISSIONER FOR PATENTS
P.O. Box 1450
Alexandria, Virginia 22313-1450
www.uspto.gov

| APPLICATION NO. | FILING DATE | FIRST NAMED INVENTOR | ATTORNEY DOCKET NO. | CONFIRMATION NO. |
|---|---|---|---|---|
| 12/979,909 | 12/28/2010 | Anshuman Tripathi | VWS-238US | 3828 |

83583 7590 04/20/2011
Wood, Herron & Evans, LLP (Vestas Wind Systems)
441 Vine Street
2700 Carew Tower
Cincinnati, OH 45202

| EXAMINER |
|---|

| ART UNIT | PAPER NUMBER |
|---|---|
| 2836 | |

| NOTIFICATION DATE | DELIVERY MODE |
|---|---|
| 04/20/2011 | ELECTRONIC |

**Please find below and/or attached an Office communication concerning this application or proceeding.**

The time period for reply, if any, is set in the attached communication.

Notice of the Office communication was sent electronically on above-indicated "Notification Date" to the following e-mail address(es):

amalik@whepatent.com
eobrien@whepatent.com
USPTODOCK@whepatent.com

UNITED STATES PATENT AND TRADEMARK OFFICE

Commissioner for Patents
United States Patent and Trademark Office
P.O. Box 1450
Alexandria, VA 22313-1450
www.uspto.gov

Wood, Herron & Evans, LLP (Vestas Wind Systems)
441 Vine Street
2700 Carew Tower
Cincinnati OH 45202

| | | |
|---|---|---|
| In re Application of | : | |
| TRIPATHI et al. | : | DECISION ON PETITION |
| Application No. 12/979,909 | : | TO MAKE SPECIAL UNDER |
| Filed: December 28, 2010 | : | THE GREEN TECHNOLOGY |
| Attorney Docket No. VWS-238US | : | PILOT PROGRAM |

This is a decision on the petition under 37 CFR 1.102, filed on December 29, 2010, to make the above-identified application special under the pilot program for applications pertaining to Green Technologies as set forth 74 Federal Register Notice 64666 (December 8, 2009) and amended by 75 Federal Register Notice 28554 (May 21, 2010) and 75 Federal Register Notice 69049 (November 10, 2010).

The petition is **DISMISSED**.

If reconsideration of this decision is desired, a petition for reconsideration must be filed within ONE (1) MONTH OR THIRTY (30) DAYS from the mail date of this decision, whichever is longer. No extension of this time limit can be granted under 37 CFR 1.136(a) or (b). The petition for reconsideration should include an exhaustive attempt to provide the lacking item(s) noted below, since, after a decision on the petition for reconsideration, no further reconsideration or review of the matter will be undertaken by the Director.

A grantable petition to make an application special under 37 CFR 1.102 and the pilot program as set forth in 74 FR 64666 must be directed to a nonprovisional application filed under 35 USC 111(a) or be a national stage entry under 35 USC 371, exclusive of any reissue applications and be filed prior to the date of the notice, December 8, 2009.

In order to qualify for special status, the following requirements must be met. 1) The application must have no more than 3 independent claims and no more than 20 total claims. 2) The application must not contain any multiple dependent claims. 3) The petition must state the basis for seeking special status, i.e., the claimed invention either: A) materially enhances the quality of the environment or B) materially contributes to: i) the discovery or development of renewable energy resources, ii) the more efficient utilization and conservation of energy resources, or iii) greenhouse gas emission reduction. 4) If the disclosure is not clear on its face that the claimed invention materially contributes under category (A) or (B), the petition must be accompanied by a statement by the applicant, assignee, or an attorney/agent registered to practice before the

Office explaining how the materiality standard is met. 5) A statement that applicant will agree to make an election without traverse in a telephonic interview if a restriction requirement is made by the examiner. 6) The petition to make special must be filed electronically. 7) The petition must be filed at least one day prior to the date that a first Office Action appears in the Patent Application Information Retrieval (PAIR) system. 8) The petition must be accompanied by a request for early publication in compliance with 37 CFR 1.219 and include the publication fee as set forth in 37 CFR 1.18(d).

The requirement for a fee for consideration of the petition to make special for applications pertaining to Green Technologies has been waived.

The petition lacks item 4.

In regard to item 4, applicant's statement pertaining to how the materiality standard is met does not satisfy the requirements for this pilot. The petition alleges that the claimed invention relates to wind turbines but the claims are merely directed to a power conversion system and method. The materiality standard does not permit an applicant to speculate as to how a hypothetical end-user might specially apply the invention in a manner that could contribute to enhancing the quality of the environment. Any argument that the claimed invention can be used with wind turbines is considered speculate as to how a hypothetical end-user might specially apply the claimed invention.

Any reconsideration of this decision should be submitted through the USPTO electronic filing system, EFS-Web, and selecting the document description of "Petition for Green Tech Pilot" on the EFS-Web screen.

Telephone inquiries concerning this decision should be directed to Lee W. Young at 571-272-4549.

The application is being forwarded to the Technology Center Art Unit 2836 for action in its regular turn.

Lee W. Young
Quality Assurance Specialist
Technology Center 2800

**Doc Code: PET.GREEN**
**Document Description: Petition for Green Tech Pilot**

PTO/SB/420 (11-10)
Approved for use through 01/31/2011. OMB 0651-0062
U.S. Patent and Trademark Office; U. S. DEPARTMENT OF COMMERCE
Under the Paperwork Reduction Act of 1995, no persons are required to respond to a collection of information unless it displays a valid OMB control number.

# PETITION TO MAKE SPECIAL UNDER THE GREEN TECHNOLOGY PILOT PROGRAM

| | | |
|---|---|---|
| Attorney Docket Number: VWS-237US | Application Number (if known): 12/979,918 | Filing date: December 28, 2010 |
| First Named Inventor: Gil Lampong Opina Jr. | | |
| Title: CONTROLLER ARRANGEMENT OF AN ELECTRICAL POWER TRANSFER SYSTEM OF A WIND TURBINE | | |

**APPLICANT HEREBY REQUESTS TO PARTICIPATE IN THE GREEN TECHNOLOGY PILOT PROGRAM FOR THE ABOVE-IDENTIFIED APPLICATION. See Instruction Sheet on page 2.**

This petition must be timely filed electronically using the USPTO electronic filing system, EFS-Web.

1. By filing this petition:

   **Applicant is requesting early publication: Applicant hereby requests early publication under 37 CFR 1.219 and the publication fee set forth in 37 CFR 1.18(d) accompanies this request.**

2. By filing this petition: applicant is agreeing to make an election without traverse in a telephonic interview and elect an invention that meets the eligibility requirements for the Green Technology Pilot Program, if the Office determines that the claims are not obviously directed to a single invention. See Instruction Sheet.

3. This request is accompanied by statements of special status for the eligibility requirement.

4. The application contains no more than three (3) independent claims and twenty (20) total claims.

5. The application does not contain any multiple dependent claims.

6. Other attachments: _____

| | |
|---|---|
| Signature /William R. Allen/ | Date 12-29-2010 |
| Name (Print/Typed) William R. Allen | Registration Number 48,389 |

***Note:*** *Signatures of all the inventors or assignees of record of the entire interest or their representative(s) are required in accordance with 37 CFR 1.33 and 11.18. Please see 37 CFR 1.4(d) for the form of the signature. If necessary, submit multiple forms for more than one signature see below*.*

☒ *Total of 1 forms are submitted.

The information is required to obtain or retain a benefit by the public which is to file (and by the USPTO to process) an application. Confidentiality is governed by 35 U.S.C. 122 and 37 CFR 1.11 and 1.14. This collection is estimated to take 12 hours to complete, including gathering, preparing, and submitting the completed application form to the USPTO. Time will vary depending upon the individual case. Any comments on the amount of time you require to complete this form and/or suggestions for reducing this burden, should be sent to the Chief Information Officer, U.S. Patent and Trademark Office, U.S. Department of Commerce, P.O. Box 1450, Alexandria, VA 22313-1450. DO NOT SEND FEES OR COMPLETED FORMS TO THIS ADDRESS. **SEND TO: Commissioner for Patents, P.O. Box 1450, Alexandria, VA 22313-1450.**

*If you need assistance in completing the form, call 1-800-PTO-9199 and select option 2.*

Under the Paperwork Reduction Act of 1995, no persons are required to respond to a collection of information unless it displays a valid OMB control number.

# Instruction Sheet for Petition to Make Special Under the Green Technology Pilot Program

(Not to be Submitted to the USPTO)

**The following is a summary of the requirements (for more information see the notices (i) "Pilot Program for Green Technologies Including Greenhouse Gas Reduction," (ii) "Elimination of Classification Requirement in the Green Technology Pilot Program," and (iii) "Expansion and Extension of the Green Technology Pilot Program," available on the USPTO web site at http://www.uspto.gov/patents/init_events/green_tech.jsp):**

1) The application must be a non-reissue, non-provisional utility application filed under 35 U.S.C. 111 (a), or an international application that has entered the national stage in compliance with 35 U.S.C. 371, irrespective of the filing date of the application. Reexamination proceedings are excluded from this pilot program.

2) The application must contain three or fewer independent claims and twenty or fewer total claims. The application must not contain any multiple dependent claims. For an application that contains more than three independent claims or twenty total claims, or multiple dependent claims, applicant must file a preliminary amendment in compliance with 37 CFR 1.121 to cancel the excess claims and/or the multiple dependent claims at the time the petition to make special is filed.

3) The claims must be directed to a single invention that materially enhances the quality of the environment, or that materially contributes to: (1) the discovery or development of renewable energy resources; (2) the more efficient utilization and conservation of energy resources; or (3) green house gas emission reduction (see the eligibility requirements of sections II and III of the notice (i) cited above). The petition must include a statement that, if the USPTO determines that the claims are directed to multiple inventions (e.g., in a restriction requirement), applicant will agree to make an election without traverse in a telephonic interview, and elect an invention that meets the eligibility requirements in section II or III of the notice (i) cited above.

4) The petition to make special must be timely filed electronically using the USPTO electronic filing system, EFS-Web, and selecting the document description of "Petition for Green Tech Pilot" on the EFS-Web screen. Applicant should use form PTO/SB/420, which is available as a Portable Document Format (PDF) fillable form in EFS-Web and on the USPTO Web site.

5) The petition to make special must be filed at least one day prior to the date that a first Office action (which may be an Office action containing only a restriction requirement) appears in the Patent Application Information Retrieval (PAIR) system. Applicant may check the status of the application using PAIR.

6) The petition to make special must be accompanied by a request for early publication in compliance with 37 CFR 1.219 and the publication fee set forth in 37 CFR 1.18(d).

## Privacy Act Statement

The **Privacy Act of 1974 (P.L. 93-579)** requires that you be given certain information in connection with your submission of the attached form related to a patent application or patent. Accordingly, pursuant to the requirements of the Act, please be advised that: (1) the general authority for the collection of this information is 35 U.S.C. 2(b)(2); (2) furnishing of the information solicited is voluntary; and (3) the principal purpose for which the information is used by the U.S. Patent and Trademark Office is to process and/or examine your submission related to a patent application or patent. If you do not furnish the requested information, the U.S. Patent and Trademark Office may not be able to process and/or examine your submission, which may result in termination of proceedings or abandonment of the application or expiration of the patent.

The information provided by you in this form will be subject to the following routine uses:

1. The information on this form will be treated confidentially to the extent allowed under the Freedom of Information Act (5 U.S.C. 552) and the Privacy Act (5 U.S.C 552a). Records from this system of records may be disclosed to the Department of Justice to determine whether disclosure of these records is required by the Freedom of Information Act.
2. A record from this system of records may be disclosed, as a routine use, in the course of presenting evidence to a court, magistrate, or administrative tribunal, including disclosures to opposing counsel in the course of settlement negotiations.
3. A record in this system of records may be disclosed, as a routine use, to a Member of Congress submitting a request involving an individual, to whom the record pertains, when the individual has requested assistance from the Member with respect to the subject matter of the record.
4. A record in this system of records may be disclosed, as a routine use, to a contractor of the Agency having need for the information in order to perform a contract. Recipients of information shall be required to comply with the requirements of the Privacy Act of 1974, as amended, pursuant to 5 U.S.C. 552a(m).
5. A record related to an International Application filed under the Patent Cooperation Treaty in this system of records may be disclosed, as a routine use, to the International Bureau of the World Intellectual Property Organization, pursuant to the Patent Cooperation Treaty.
6. A record in this system of records may be disclosed, as a routine use, to another federal agency for purposes of National Security review (35 U.S.C. 181) and for review pursuant to the Atomic Energy Act (42 U.S.C. 218(c)).
7. A record from this system of records may be disclosed, as a routine use, to the Administrator, General Services, or his/her designee, during an inspection of records conducted by GSA as part of that agency's responsibility to recommend improvements in records management practices and programs, under authority of 44 U.S.C. 2904 and 2906. Such disclosure shall be made in accordance with the GSA regulations governing inspection of records for this purpose, and any other relevant (*i.e.*, GSA or Commerce) directive. Such disclosure shall not be used to make determinations about individuals.
8. A record from this system of records may be disclosed, as a routine use, to the public after either publication of the application pursuant to 35 U.S.C. 122(b) or issuance of a patent pursuant to 35 U.S.C. 151. Further, a record may be disclosed, subject to the limitations of 37 CFR 1.14, as a routine use, to the public if the record was filed in an application which became abandoned or in which the proceedings were terminated and which application is referenced by either a published application, an application open to public inspection or an issued patent.
9. A record from this system of records may be disclosed, as a routine use, to a Federal, State, or local law enforcement agency, if the USPTO becomes aware of a violation or potential violation of law or regulation.

UNITED STATES PATENT AND TRADEMARK OFFICE

UNITED STATES DEPARTMENT OF COMMERCE
United States Patent and Trademark Office
Address: COMMISSIONER FOR PATENTS
P.O. Box 1450
Alexandria, Virginia 22313-1450
www.uspto.gov

| APPLICATION NO. | FILING DATE | FIRST NAMED INVENTOR | ATTORNEY DOCKET NO. | CONFIRMATION NO. |
|---|---|---|---|---|
| 12/979,918 | 12/28/2010 | Gil Lampong Opina JR. | VWS-237US | 3839 |

26875 7590 02/11/2011
WOOD, HERRON & EVANS, LLP
2700 CAREW TOWER
441 VINE STREET
CINCINNATI, OH 45202

| EXAMINER |
|---|

| ART UNIT | PAPER NUMBER |
|---|---|
| 2115 | |

| MAIL DATE | DELIVERY MODE |
|---|---|
| 02/11/2011 | PAPER |

**Please find below and/or attached an Office communication concerning this application or proceeding.**

The time period for reply, if any, is set in the attached communication.

UNITED STATES PATENT AND TRADEMARK OFFICE

Commissioner for Patents
United States Patent and Trademark Office
P.O. Box 1450
Alexandria, VA 22313-1450
www.uspto.gov

WOOD, HERRON & EVANS, LLP
2700 CAREW TOWER
441 VINE STREET
CINCINNATI OH 45202

| | | |
|---|---|---|
| In re Application of: | : | |
| OPINA, Gil Lampong Jr. et al. | : | DECISION ON PETITION |
| Application No. 12/979,918 | : | TO MAKE SPECIAL UNDER |
| Filed: December 28, 2010 | : | THE GREEN TECHNOLOGY |
| Attorney Docket No. **VWS-237US** | : | PILOT PROGRAM |

This is a decision on the renewed petition under 37 CFR 1.102, filed December 29, 2011, to make the above-identified application special under the pilot program for applications pertaining to Green Technologies as set forth in 74 Federal Register Notice 64666 (December 8, 2009) and amended by 75 Federal Register Notice 28554 (May 21, 2010) and 75 Federal Register Notice 69049 (November 10, 2010).

The petition is **GRANTED**.

A grantable petition to make an application special under 37 CFR 1.102 and the pilot program as set forth in 74 FR 64666 must be directed to a nonprovisional application filed under 35 USC 111(a) or be a national stage entry under 35 USC 371, exclusive of any reissue applications.

In order to qualify for special status, the following requirements must be met. 1) The application must have no more than 3 independent claims and no more than 20 total claims. 2) The application must not contain any multiple dependent claims. 3) The petition must state the basis for seeking special status, i.e., the claimed invention either: A) materially enhances the quality of the environment or B) materially contributes to: i) the discovery or development of renewable energy resources, ii) the more efficient utilization and conservation of energy resources, or iii) greenhouse gas emission reduction. 4) If the disclosure is not clear on its face that the claimed invention materially contributes under category (A) or (B), the petition must be accompanied by a statement by the applicant, assignee, or an attorney/agent registered to practice before the Office explaining how the materiality standard is met. 5) A statement that applicant will agree to make an election without traverse in a telephonic interview if a restriction requirement is made by the examiner. 6) The petition to make special must be filed electronically. 7) The petition must be filed at least one day prior to the date that a first Office Action appears in the Patent

Application Information Retrieval (PAIR) system. 8) The petition must be accompanied by a request for early publication in compliance with 37 CFR 1.219 and include the publication fee as set forth in 37 CFR 1.18(d).

The requirement for a fee for consideration of the petition to make special for applications pertaining to Green Technologies has been waived.

The instant petition complies with items 1 – 8 above. Accordingly, the above-identified application has been accorded "special" status.

The application is being forwarded to the Technology Center Art Unit 2115 for action on the merits commensurate with this decision.

Telephone inquires concerning this decision should be directed to Eddie C. Lee at 571-272-1732.

/Eddie C. Lee/

Eddie C. Lee
Quality Assurance Specialist
Technology Center 2100

UNITED STATES PATENT AND TRADEMARK OFFICE

Commissioner for Patents
United States Patent and Trademark Office
P.O. Box 1450
Alexandria, VA 22313-1450
www.uspto.gov

**MCGARRY BAIR PC**
**32 MARKET AVE., SW**
**SUITE 500**
**GRAND RAPIDS MI 49503**

MAILED
JAN 20 2012
OFFICE OF PETITIONS

In re Application of
Don S. Rawlings
Application No. 12/979,955
Filed: December 28, 2010
Attorney Docket No. 71486-0148

DECISION ON REQUEST FOR REFUND

This is a decision on the Request For Refund filed October 24, 2011 and again on January 4, 2012.

The request is **DISMISSED**.

Applicants filed the above request for refund and states that "This Application Serial No. 12/979,955 was filed electronically via EFS-Web filing on December 28, 2010. When Applicant reached the fee submission portion of the process, Deposit Account 50-2003 contained insufficient funds to complete the filing. Additional funds were immediately added to Deposit Account 50-2003 while the filing process was briefly suspended. When Applicant attempted to continue with the filing process, the process returned to the first screen. However, the Acknowledgement Receipt in EFS-Web showed that the application had been assigned serial number 12/979,955, but indicated that the application was "pending." An attempt to view the Acknowledgement Receipt and the submission in PAIR was unsuccessful."

However, because applicants interrupted the filing process during fee payment, the N417 was not generated until about two hours later then RAM timed out. Applicants were unable to immediately view the acknowledgement receipt so applicants refilled the application, notwithstanding the fact that applicants called the Electronic Business Center (EBC) and the EBC was able to view the submitted '955 application. Applicants then filed a SECOND application without fees (12980000).

Applicants should have asked the EBC agent for the confirmation number in the '955 application and filed a follow-on-document with an authorization to charge fees in order to avoid the late-filing surcharge of $130.00.

In view of the above, the request for refund is dismissed.

Any questions concerning this matter may be directed to the undersigned at (571) 272-3208.

'KOC/
Karen Creasy
Petitions Examiner
Office of Petitions

PTO/SB/20PCT-KR (06-10)
Approved for use through 01/31/2012. OMB 0651-0058
U.S. Patent and Trademark Office; U. S. DEPARTMENT OF COMMERCE
Under the Paperwork Reduction Act of 1995, no persons are required to respond to a collection of information unless it displays a valid OMB control number.

# REQUEST FOR PARTICIPATION IN THE PATENT COOPERATION TREATY - PATENT PROSECUTION HIGHWAY (PCT-PPH) PILOT PROGRAM BETWEEN THE KOREAN INTELLECTUAL PROPERTY OFFICE (KIPO) AND THE USPTO

| | | | |
|---|---|---|---|
| Application No: | 12/980,018 | Filing date: | December 28, 2010 |
| First Named Inventor: | Wenger, LaVon | | |
| Title of the Invention: | METHOD AND APPARATUS FOR PRODUCING FULLY COOKED EXTRUDATES WITH SIGNIFICANT | | |

**THIS REQUEST FOR PARTICIPATION IN THE PCT-PPH PILOT PROGRAM ALONG WITH THE REQUIRED DOCUMENTS MUST BE SUBMITTED VIA EFS-WEB. INFORMATION REGARDING EFS-WEB IS AVAILABLE AT HTTP://WWW.USPTO.GOV/EBC/EFS_HELP.HTML**

**APPLICANT HEREBY REQUESTS PARTICIPATION IN THE PCT-PPH PROGRAM AND PETITIONS TO MAKE THE ABOVE-IDENTIFIED APPLICATION SPECIAL UNDER THE PCT-PPH PROGRAM.**

The above-identified application is (1) a national stage entry of the corresponding PCT application, or (2) a national stage entry of another PCT application which claims priority to the corresponding PCT application, or (3) a national application that claims domestic/ foreign priority to the corresponding PCT application, or (4) a national application which forms the basis for the priority claim in the corresponding PCT application, or (5) a continuing application of a U.S. application that satisfies one of (1) to (4) above, or (6) a U.S. application that claims domestic benefit to a U.S. provisional application which forms the basis for the priority claim in the corresponding PCT application.

**The corresponding PCT application number(s) is/are:** WO 2010/030410

**The international date of the corresponding PCT application(s) is/are:** 2009-4-14

**I. List of Required Documents:**

a. **A copy of the latest international work product (WO/ISA, WO/IPEA, or IPER) in the above–identified corresponding PCT application(s)**

- [x] Is attached.
- [ ] Is not attached because the document is already in the U.S. application.

b. **A copy of all claims which were indicated as having novelty, inventive step and industrial applicability in the above-identified corresponding PCT application(s).**

- [x] Is attached.
- [ ] Is not attached because the document is already in the U.S. application.

c. **English translations of the documents in a. and b. above are attached (if the documents are not in the English language). A statement that the English translation is accurate is attached for the document in b. above.**



This collection of information is required by 35 U.S.C. 119, 37 CFR 1.55, and 37 CFR 1.102(d). The information is required to obtain or retain a benefit by the public, which is to file (and by the USPTO to process) an application. Confidentiality is governed by 35 U.S.C. 122 and 37 CFR 1.11 and 1.14. This collection is estimated to take 2 hours to complete, including gathering, preparing, and submitting the completed application form to the USPTO. Time will vary depending upon the individual case. Any comments on the amount of time you require to complete this form and/or suggestions for reducing this burden should be sent to the Chief Information Officer, U.S. Patent and Trademark Office, U.S. Department of Commerce, P.O. Box 1450, Alexandria, VA 22313-1450. DO NOT SEND FEES OR COMPLETED FORMS TO THIS ADDRESS.

Approved for use through 01/31/2012. OMB 0651-0058
U.S.Patent and Trademark Office; U.S. DEPARTMENT OF COMMERCE
Under the Paperwork Reduction Act of 1995, no persons are required to respond to a collection of information unless it displays a valid OMB control number.

# REQUEST FOR PARTICIPATION IN THE PCT-PPH PILOT PROGRAM BETWEEN THE KIPO AND THE USPTO

(continued)

| | |
|---|---|
| Application No.: | 12/980,018 |
| First Named Inventor: | Wenger, LaVon |

d. **(1) An information disclosure statement listing the documents cited in the international work products (ISR, WO/ISA, WO/IPEA, IPER) of the corresponding PCT application.**

☒ Is attached

☐ Has already been filed in the above-identified U.S. application on _____

**(2) Copies of all documents (except) for U.S. patents or U.S. patent application publications)**

☒ Are attached.

Have already been filed in the above-identified U.S. application on _____

## II. Claims Correspondence Table:

| Claims in US Application | Patentable Claims in the corresponding PCT Application | Explanation regarding the correspondence |
|---|---|---|
| 1-18 | 1-18 | identical wording |
| | | |
| | | |
| | | |
| | | |
| | | |
| | | |
| | | |
| | | |
| | | |
| | | |
| | | |
| | | |
| | | |
| | | |
| | | |
| | | |
| | | |
| | | |
| | | |

**III. All the claims in the US application sufficiently correspond to the patentable claims in the corresponding PCT application.**

| | | | |
|---|---|---|---|
| Signature | /John Michael Collins/ | Date | 2010-12-28 |
| Name (Print/Typed) | John Michael Collins | Registration Number | 26,262 |

# Privacy Act Statement

The **Privacy Act of 1974 (P.L. 93-579)** requires that you be given certain information in connection with your submission of the attached form related to a patent application or patent. Accordingly, pursuant to the requirements of the Act, please be advised that: (1) the general authority for the collection of this information is 35 U.S.C. 2(b)(2); (2) furnishing of the information solicited is voluntary; and (3) the principal purpose for which the information is used by the U.S. Patent and Trademark Office is to process and/or examine your submission related to a patent application or patent. If you do not furnish the requested information, the U.S. Patent and Trademark Office may not be able to process and/or examine your submission, which may result in termination of proceedings or abandonment of the application or expiration of the patent.

The information provided by you in this form will be subject to the following routine uses:

1. The information on this form will be treated confidentially to the extent allowed under the Freedom of Information Act (5 U.S.C. 552) and the Privacy Act (5 U.S.C 552a). Records from this system of records may be disclosed to the Department of Justice to determine whether disclosure of these records is required by the Freedom of Information Act.
2. A record from this system of records may be disclosed, as a routine use, in the course of presenting evidence to a court, magistrate, or administrative tribunal, including disclosures to opposing counsel in the course of settlement negotiations.
3. A record in this system of records may be disclosed, as a routine use, to a Member of Congress submitting a request involving an individual, to whom the record pertains, when the individual has requested assistance from the Member with respect to the subject matter of the record.
4. A record in this system of records may be disclosed, as a routine use, to a contractor of the Agency having need for the information in order to perform a contract. Recipients of information shall be required to comply with the requirements of the Privacy Act of 1974, as amended, pursuant to 5 U.S.C. 552a(m).
5. A record related to an International Application filed under the Patent Cooperation Treaty in this system of records may be disclosed, as a routine use, to the International Bureau of the World Intellectual Property Organization, pursuant to the Patent Cooperation Treaty.
6. A record in this system of records may be disclosed, as a routine use, to another federal agency for purposes of National Security review (35 U.S.C. 181) and for review pursuant to the Atomic Energy Act (42 U.S.C. 218(c)).
7. A record from this system of records may be disclosed, as a routine use, to the Administrator, General Services, or his/her designee, during an inspection of records conducted by GSA as part of that agency's responsibility to recommend improvements in records management practices and programs, under authority of 44 U.S.C. 2904 and 2906. Such disclosure shall be made in accordance with the GSA regulations governing inspection of records for this purpose, and any other relevant ( *i.e.*, GSA or Commerce) directive. Such disclosure shall not be used to make determinations about individuals.
8. A record from this system of records may be disclosed, as a routine use, to the public after either publication of the application pursuant to 35 U.S.C. 122(b) or issuance of a patent pursuant to 35 U.S.C. 151. Further, a record may be disclosed, subject to the limitations of 37 CFR 1.14, as a routine use, to the public if the record was filed in an application which became abandoned or in which the proceedings were terminated and which application is referenced by either a published application, an application open to public inspection or an issued patent.
9. A record from this system of records may be disclosed, as a routine use, to a Federal, State, or local law enforcement agency, if the USPTO becomes aware of a violation or potential violation of law or regulation.

We claim:

1. A method of extruding a comestible material through a cooking extruder having an elongated, tubular barrel with an inlet and a restricted orifice die outlet and presenting a longitudinal axis, and an elongated, axially rotatable, helically flighted screw within said barrel, said method comprising the steps of:

passing said material into said barrel inlet, and conveying said material along the length thereof toward and through said restricted orifice die outlet;

during such passage of said material through the barrel, creating at least one zone within the barrel between said inlet and said outlet and having free volume not occupied by said material; and

injecting steam into said barrel at said at least one zone, with the total amount of steam injected into said barrel being from about 10-25% by weight of steam into said material, based upon the weight of material within said barrel taken as 100 % by weight.

2. The method of claim 1, including the step of creating steam flow restriction zones on opposite sides of said one zone in order to inhibit passage of the injected steam past the flow restriction zones.

3. The method of claim 1, including the step of injecting said steam into said zone at an angle oriented such that an orthogonal resolution of said angle gives a component parallel with the longitudinal axis of said barrel and extending toward said barrel outlet.

4. The method of claim 1, said angle being from about 30-60° relative to said barrel longitudinal axis.

5. The method of claim 1, substantially all of said steam being injected into said at least one zone.

6. A method of extruding a comestible material using a cooking extruder having an elongated, tubular barrel with an inlet and an outlet and presenting a longitudinal axis, a restrictive orifice die plate disposed across said outlet, and an elongated, axially rotatable, helically flighted screw within said barrel, said method comprising the steps of:

passing said material into said barrel inlet and rotating said screw to convey said material along the length thereof toward and through said die plate, and imparting an SME input into said material;

during said passage of said material through said barrel, creating at least one zone within the barrel having free volume not occupied by said material; and

injecting steam into said zone at an oblique angle relative to said barrel longitudinal axis, and causing said injected steam to mix with said material,

said injecting and mixing steps serving to add in excess of 6% by weight steam, based upon the total dry weight of said material taken as 100% by weight,

said SME input being up to about 22 kWhr/T of said material.

7. The method of claim 6, said steam being added at a level of from about 10-25% by weight.

8. The method of claim 6, said barrel including a plurality of injection ports oriented such that orthogonal resolutions of the longitudinal axes thereof have components parallel with said barrel longitudinal axis and extending toward said barrel outlet.

9. The method of claim 6, said oblique angle being from about 30-60° relative to said barrel longitudinal axis.

10. In a method of processing comestible materials in order to produce an extrudate, said method comprising the steps of passing a comestible material into and through a twin-screw cooking extruder having an elongated, tubular barrel with an inlet and an outlet and presenting a longitudinal axis, a restrictive orifice die plate disposed across said outlet, and a pair of elongated, axially rotatable, helically flighted screw within said barrel, the improvement which comprises creating a zone within said barrel between said inlet and said outlet having free volume not occupied by said material, and injecting steam into said barrel at said zone, wherein the step of injecting steam into said zone includes the step of injecting said steam into said zone at a level of from about 7-25% by weight of steam into said material, based upon the weight of material within said barrel taken as 100% weight, and injecting the steam at an angle oriented such that an orthogonal resolution of said angle gives a component parallel with the longitudinal axis of said barrel and extending toward said barrel outlet.

11. A screw assembly for use in a twin-screw extruder and comprising:

first and second elongated, axially rotatable screws each having an elongated shaft with outwardly extending helical flighting along the length of each shaft, the flighting of each shaft being intermeshed with the flighting of the other shaft,

the flighting of each of the first and second shafts presenting a pair of axially spaced apart sections of short pitch length, and an intermediate section having a pitch length greater than the pitch lengths of either of said short pitch length sections,

the flighting of said intermeshed intermediate sections having an axial gap distance therebetween of from about 0.1-0.4 inches.

12. The screw assembly of claim 12, said gap distance being from about 0.15-0.35 inches.

13. The screw assembly of claim 11, said screws having an $S_D/R_D$ ratio of from about 1.9-2.5.

14. The screw assembly of claim 11, the ratio of the pitch length of said intermediate section to the pitch lengths of either of said first and second sections being from about 1-7.

15. The screw assembly of claim 11, the ratio of said long pitch length to the flight depth ratio in the long pitch length section being from about 0.4-0.9.

16. A screw assembly for use in a twin-screw extruder and comprising:

first and second elongated, axially rotatable screws each having an elongated shaft with outwardly extending helical flighting along the length of each shaft, the flighting of each shaft being intermeshed with the flighting of the other shaft,

the flighting of each of the first and second shafts presenting a pair of axially spaced apart sections of short pitch length, and an intermediate section having a pitch length greater than the pitch lengths of either of said short pitch length sections,

the ratio of the pitch length of said intermediate section to the pitch lengths of either of said first and second sections being from about 1-7.

17. The screw assembly of claim 16, the ratio of said long pitch length to the flight depth ratio in the long pitch length section being from about 0.4-0.9.

18. A screw assembly for use in a twin-screw extruder and comprising:

first and second elongated, axially rotatable screws each having an elongated shaft with outwardly extending helical flighting along the length of each shaft, the flighting of each shaft being intermeshed with the flighting of the other shaft,

the flighting of each of the first and second shafts presenting a pair of axially spaced apart sections of short pitch length, and an intermediate section having a pitch length greater than the pitch lengths of either of said short pitch length sections,

the ratio of said long pitch length to the flight depth ratio in the long pitch length section is from about 0.4-0.9.

39640 - PCT

**ATTORNEY:** JMC/OCS
**DOC. DTD:** 11/24/09

- ☐ Filing Receipt
- ☐ **Office Action** _____
- ☐ Publication _____
- ☐ Allowance _____
- ☐ Statement of Use Due
- ☐ Statement of Use Accepted _____
- ☐ Examiner's Amendment
- ☐ Request Examination
- ☐ Grant/Reg. Fee Due
- ☐ Letters/Patent/Registration
- ☐ Registration
- ☐ Renewal
- ☐ Rejection
- ☐ Deadline to Oppose
- ☐ Response to Opposition
- ☐ Declaration of Use Due
- ☐ Grant Data
- ☐ ( )Year Use
- ☐ EP Validation
- ☐ Extension Granted
- ☐ Rejection
- ☒ Other: Search Report & Written opinion

**RESPONSE DUE:** _____

12/2/09
SCANNED

PCT/US2009/040483

RECEIVED

NOV 30 2009

HOVEY WILLIAMS LLP

# PATENT COOPERATION TREATY

From the INTERNATIONAL SEARCHING AUTHORITY

To:

SKOCH GREGORY J

HOVEY WILLIAMS LLP 10801 MASTIN BLVD. SUITE 1000 84 CORPORATE WOODS OVERLAND PARK KS 66210 USA

# PCT

## NOTIFICATION OF TRANSMITTAL OF THE INTERNATIONAL SEARCH REPORT AND THE WRITTEN OPINION OF THE INTERNATIONAL SEARCHING AUTHORITY, OR THE DECLARATION

**(PCT Rule 44.1)**

| | |
|---|---|
| | Date of mailing *(day/month/year)* 24 NOVEMBER 2009 (24.11.2009) |
| Applicant's or agent's file reference<br>39640-PCT | **FOR FURTHER ACTION** See paragraphs 1 and 4 below |
| International application No.<br>**PCT/US2009/040483** | International filing date *(day/month/year)*<br>**14 APRIL 2009 (14.04.2009)** |
| Applicant<br>**WENGER MANUFACTURING, INC. et al** | |

1. ☒ The applicant is hereby notified that the international search report and the written opinion of the International Searching Authority have been established and are transmitted herewith.
**Filing of amendments and statement under Article 19:**
The applicant is entitled, if he so wishes, to amend the claims of the international application (see Rule 46):
**When?** The time limit for filing such amendments is normally two months from the date of transmittal of the international search report.
**Where?** Directly to the International Bureau of WIPO, 34 chemin des Colombettes 1211 Geneva 20, Switzerland, Facsimile No.: +41 22 338 82 70
**For more detailed instructions,** see the notes on the accompanying sheet.

2. ☐ The applicant is hereby notified that no international search report will be established and that the declaration under Article 17(2)(a) to that effect and the written opinion of the International Searching Authority are transmitted herewith.

3. ☐ **With regard to any protest** against payment of (an) additional fee(s) under Rule 40.2, the applicant is notified that:
☐ the protest together with the decision thereon has been transmitted to the International Bureau together with the applicant's request to forward the texts of both the protest and the decision thereon to the designated Offices.
☐ no decision has been made yet on the protest; the applicant will be notified as soon as a decision is made.

4. **Reminders**
Shortly after the expiration of **18 months** from the priority date, the international application will be published by the International Bureau. If the applicant wishes to avoid or postpone publication, a notice of withdrawal of the international application, or of the priority claim, must reach the International Bureau as provided in Rules 90*bis*.1 and 90*bis*.3, respectively, before the completion of the technical preparations for international publication.

The applicant may submit comments on an informal basis on the written opinion of the International Searching Authority to the International Bureau. The International Bureau will send a copy of such comments to all designated Offices unless an international preliminary examination report has been or is to be established. These comments would also be made available to the public but not before the expiration of 30 months from the priority date.

Within **19 months** from the priority date, but only in respect of some designated Offices, a demand for international preliminary examination must be filed if the applicant wishes to postpone the entry into the national phase **until 30 months** from the priority date (in some Offices even later); otherwise, the applicant must, **within 20 months** from the priority date, perform the prescribed acts for entry into the national phase before those designated Offices.

In respect of other designated Offices, the time limit of **30 months** (or later) will apply even if no demand is filed within 19 months.

See the Annex to Form PCT/IB/301 and, for details about the applicable time limits, Office by Office, see the *PCT Applicant's Guide*, National Chapters.

DEC 01 2009

ENTERED BY VMW

| | |
|---|---|
| Name and mailing address of the ISA/KR<br>Korean Intellectual Property Office<br>Government Complex-Daejeon, 139 Seonsa-ro, Seo-gu, Daejeon 302-701, Republic of Korea<br>Facsimile No. 82-42-472-7140 | Authorized officer<br>COMMISSIONER<br>Telephone No. 82-42-481-5281 |

## NOTES TO FORM PCT/ISA/220

These Notes are intended to give the basic instructions concerning the filing of amendments under Article 19. The Notes are based on the requirements of the Patent Cooperation Treaty, the Regulations and the Administrative Instructions under that Treaty. In case of discrepancy between these Notes and those requirements, the latter are applicable. For more detailed information, see also the *PCT Applicant's Guide*.

In these Notes, "Article", "Rule" and "Section" refer to the provisions of the PCT, the PCT Regulations and the PCT Administrative Instructions, respectively.

## INSTRUCTIONS CONCERNING AMENDMENTS UNDER ARTICLE 19

The applicant has, after having received the international search report and the written opinion of the International Searching Authority, one opportunity to amend the claims of the international application. It should however be emphasized that, since all parts of the international application (claims, description and drawings) may be amended during the international preliminary examination procedure, there is usually no need to file amendments of the claims under Article 19 except where, e.g. the applicant wants the latter to be published for the purposes of provisional protection or has another reason for amending the claims before international publication. Furthermore, it should be emphasized that provisional protection is available in some States only (see *PCT Applicant's Guide*, Annex B).

The attention of the applicant is drawn to the fact that ammendments to the claims under Article 19 are not allowed where the International Searching Authority has declared, under Article 17(2), that no international search report would be established (see *PCT Applicant's Guide*, paragraph 296).

**What parts of the international application may be amended ?**

Under Article 19, only the claims may be amended.

During the international phase, the claims may also be amended (or further amended) under Article 34 before the International Preliminary Examining Authority. The description and drawings may only be amended under Article 34 before the International Preliminary Examining Authority.

Upon entry into the national phase, all parts of the international application may be amended under Article 28 or, where applicable, Article 41.

**When ?** Within 2 months from the date of transmittal of the international search report or 16 months from the priority date, whichever time limit expires later. It should be noted, however, that the amendments will be considered as having been received on time if they are received by the International Bureau after the expiration of the applicable time limit but before the completion of the technical preparations for international publication (Rule 46.1).

**Where not to file the amendments ?**

The amendments may only be filed with the International Bureau and not with the receiving Office or the International Searching Authority (Rule 46.2).

Where a demand for international preliminary examination has been/is filed, see below.

**How ?** Either by cancelling one or more entire claims, by adding one or more new claims or by amending the text of one or more of the claims as filed.

A replacement sheet or sheets containing a complete set of claims in replacement of all the claims previously filed must be submitted.
Where a claim is cancelled, no renumbering of the other claims is required. In all cases where claims are renumbered, they must be renumbered consecutively .in Arabic numerals (Section 205(a)).

**The amendments must be made in the language in which the international application is to be published.**

**What documents must/may accompany the amendments ?**

**Letter (Section 205(b)):**
The amendments must be submitted with a letter.
The letter will not be published with the international application and the amended claims. It should not be confused with the "Statement under Article 19(1)" (see below,under "Statement under Article 19(1)").
**The letter must be in English or French, at the choice of the applicant. However, if the language of the international application is English, the letter must be in English; if the language of the international application is French, the letter must be in French.**

## NOTES TO FORM PCT/ISA/220 (continued)

The letter must indicate the differences between the claims as filed and the claims as amended. It must, in particular, indicate, in connection with each claim appearing in the international application (it being understood that identical indications concerning several claims may be grouped), whether

(i) the claim is unchanged;
(ii) the claim is cancelled;
(iii) the claim is new;
(iv) the claim replaces one or more claims as filed;
(v) the claim is the result of the division of a claim as filed.

**The following examples illustrate the manner in which amendments must be explained in the accompanying letter:**

1. [Where originally there were 48 claims and after amendment of some claims there are 51]:
   "Claims 1 to 29, 31, 32, 34, 35, 37 to 48 replaced by amended claims bearing the same numbers; claims 30, 33 and 36 unchanged; new claims 49 to 51 added."
2. [Where originally there were 15 claims and after amendment of all claims there are 11]:
   "Claims 1 to 15 replaced by amended claims 1 to 11."
3. [Where originally there were 14 claims and the amendments consist in cancelling some claims and in adding new claims]:
   "Claims 1 to 6 and 14 unchanged; claims 7 to 13 cancelled; new claims 15, 16 and 17 added." or
   "Claims 7 to 13 cancelled; new claims 15, 16 and 17 added; all other claims unchanged."
4. [Where various kinds of amendments are made]:
   "Claims 1 - 10 unchanged; claims 11 to 13, 18 and 19 cancelled; claims 14, 15 and 16 replaced by amended claim 14; claim 17 subdivided into amended claims 15, 16 and 17; new claims 20 and 21 added."

**"Statement under Article 19(1)" (Rule 46.4)**

The amendments may be accompanied by a statement explaining the amendments and indicating any impact that such amendments might have on the description and the drawings (which cannot be amended under Article 19(1)).

The statement will be published with the international application and the amended claims.

**It must be in the language in which the international application is to be published.**

It must be brief, not exceeding 500 words if in English or if translated into English.

It should not be confused with and does not replace the letter indicating the differences between the claims as filed and as amended. It must be filed on a separate sheet and must be indentified as such by a heading, preferably by using the words "Statement under Article 19(1)."

It may not contain any disparaging comments on the international search report or the relevance of citations contained in that report. Reference to citations, relevant to a given claim, contained in the international search report may be made only in connection with an amendment of that claim.

**Consequence if a demand for international preliminary examination has already been filed**

If, at the time of filing any amendments and any accompanying statement, under Article 19, a demand for international preliminary examination has already been submitted, the applicant must preferably, at the time of filing the amendments (and any statement) with the International Bureau, also file with the International Preliminary Examining Authority a copy of such amendments (and of any statement) and, where required, a translation of such amendments for the proceduer before that Authority (see Rules 55.3(a) and 62.2, first sentence). For further information, see the Notes to the demand form (PCT/IPEA/401).

If a demand for international preliminary examination is made, the written opinion of the International Searching Authority will, except in certain cases where the International Preliminary Examining Authority did not act as International Searching Authority and where it has notified the International Bureau under Rule 66.1*bis*(b), be considered to be a written opinion of the International Preliminary Examining Authority. If a demand is made, the applicant may submit to the International Preliminary Examining Authority a reply to the written opinion together, where appropriate, with amendments before the expiration of 3 months from the date of mailing of Form PCT/ISA/220 or before the expiration of 22 months from the priority date, whichever expires later (Rule 43*bis*.1(c)).

**Consequence with regard to translation of the international application for entry into the national phase**

The applicant's attention is drawn to the fact that, upon entry into the national phase, a translation of the claims as amended under Article 19 may have to be furnished to the designated/elected Offices, instead of, or in addition to , the translation of the claims as filed.

For further details on the requirements of each designated/elected Office, see the *PCT Applicant's Guide*, National Chapters.

* Attention

Copies of the documents cited in the international search report can be searched in the following Korean Intellectual Property Office English website for three months from the date of mailing of the international search report.

http://www.kipo.go.kr/en/ => Patent Search => PCT-Service

ID : PCT international application number
PW : **4A5SFIVS**

Inquiries related to PCT International Search Report or Written Opinion prepared by KIPO as an International Searching Authority can be answered not only by KIPO but also through IPKC (Intellectual Property Korea Center), located in Vienna, VA, which functions as a PCT Help Desk for PCT applicants.

Homepage: http://www.ipkcenter.com
Email: ipkc@ipkcenter.com
Phone: +1 703 388 1066
Fax: +1 703 388 1084

# PATENT COOPERATION TREATY

From the
INTERNATIONAL SEARCHING AUTHORITY

To:
SKOCH GREGORY J

HOVEY WILLIAMS LLP 10801 MASTIN BLVD. SUITE 1000 84 CORPORATE WOODS OVERLAND PARK KS 66210 USA

# PCT

**WRITTEN OPINION OF THE INTERNATIONAL SEARCHING AUTHORITY**

**(PCT Rule 43bis.1)**

| | |
|---|---|
| Date of mailing *(day/month/year)* | **24 NOVEMBER 2009 (24.11.2009)** |
| Applicant's or agent's file reference<br>39640-PCT | **FOR FURTHER ACTION**<br>See paragraph 2 below |

| International application No. | International filing date *(day/month/year)* | Priority date *(day/month/year)* |
|---|---|---|
| **PCT/US2009/040483** | **14 APRIL 2009 (14.04.2009)** | 11 SEPTEMBER 2008 (11.09.2008) |

International Patent Classification (IPC) or both national classification and IPC

***A23P 1/12(2006.01)i, A23N 17/00(2006.01)i, A47J 43/04(2006.01)i***

Applicant

**WENGER MANUFACTURING, INC. et al**

1. This opinion contains indications relating to the following items:

- [x] Box No. I Basis of the opinion
- [ ] Box No. II Priority
- [ ] Box No. III Non-establishment of opinion with regard to novelty, inventive step and industrial applicability
- [ ] Box No. IV Lack of unity of invention
- [x] Box No. V Reasoned statement under Rule 43bis.1(a)(i) with regard to novelty, inventive step or industrial applicability; citations and explanations supporting such statement
- [x] Box No. VI Certain documents cited
- [ ] Box No. VII Certain defects in the international application
- [x] Box No. VIII Certain observations on the international application

2. **FURTHER ACTION**
If a demand for international preliminary examination is made, this opinion will be considered to be a written opinion of the International Preliminary Examining Authority ("IPEA") except that this does not apply where the applicant chooses an Authority other than this one to be the IPEA and the chosen IPEA has notified the International Bureau under Rule 66.1bis(b) that written opinions of this International Searching Authority will not be so considered.

If this opinion is, as provided above, considered to be a written opinion of the IPEA, the applicant is invited to submit to the IPEA a written reply together, where appropriate, with amendments, before the expiration of 3 months from the date of mailing of Form PCT/ISA/220 or before the expiration of 22 months from the priority date, whichever expires later.
For further options, see Form PCT/ISA/220.

3. For further details, see notes to Form PCT/ISA/220.

| Name and mailing address of the ISA/KR | Date of completion of this opinion | Authorized officer |
|---|---|---|
| Korean Intellectual Property Office<br>Government Complex-Daejeon, 139 Seonsa-ro, Seo-gu, Daejeon 302-701, Republic of Korea<br>Facsimile No. 82-42-472-7140 | 24 NOVEMBER 2009 (24.11.2009) | Lee, Jae Yeong<br>Telephone No.82-42-481-8169 |

**WRITTEN OPINION OF THE INTERNATIONAL SEARCHING AUTHORITY**

International application No.
**PCT/US2009/040483**

**Box No. I Basis of this opinion**

1. With regard to the **language**, this opinion has been established on the basis of :

   ☒ the international application in the language in which it was filed

   ☐ a translation of the international application into _____ , which is the language of a translation furnished for the purposes of international search (Rules 12.3(a) and 23.1(b))

2. ☐ This opinion has been established taking into account the **rectification of an obvious mistake** authorized by or notified to this Authority under Rule 91 (Rule 43*bis*.1(a))

3. With regard to any **nucleotide and/or amino acid sequence** disclosed in the international application, this opinion has been established on the basis of:

   a. type of material
   ☐ a sequence listing
   ☐ table(s) related to the sequence listing

   b. format of material
   ☐ on paper
   ☐ in electronic form

   c. time of filing/furnishing
   ☐ contained in the international application as filed.
   ☐ filed together with the international application in electronic form.
   ☐ furnished subsequently to this Authority for the purposes of search.

4. ☐ In addition, in the case that more than one version or copy of a sequence listing and/or table relating thereto has been filed or furnished, the required statements that the information in the subsequent or additioanl copies is identical to that in the application as filed or does not go beyond the application as filed, as appropriate, were furnished.

5. Additional comments:

**WRITTEN OPINION OF THE INTERNATIONAL SEARCHING AUTHORITY**

International application No.
**PCT/US2009/040483**

**Box No. V Reasoned statement under Rule 43bis.1(a)(i) with regard to novelty, inventive step or industrial applicability; citations and explanations supporting such statement**

1. Statement

| | | | |
|---|---|---|---|
| Novelty (N) | Claims | 1-18 | YES |
| | Claims | None | NO |
| Inventive step (IS) | Claims | 1-18 | YES |
| | Claims | None | NO |
| Industrial applicability (IA) | Claims | 1-18 | YES |
| | Claims | None | NO |

2. Citations and explanations :

**Reference is made to the following documents:**

D1: US 5,932,264 A
D2: US 2007-0237022 A1
D3: US 2007-0148320 A1
D4: US 6,609,819 B2
D5: US 3,970,761 A1
D6: JP 61-285961 A

**1. Novelty and Inventive step**

1-1. Independent claims 1, 6, 10, 11, 16 and 18
Claims 1, 6 and 10 satisfy the criteria set out in PCT Article 33(2)-(3), because the prior art documents do not disclose or suggest the feature of the injected steam in excess of 6% by weight steam.

Claims 11, 16 and 18 satisfy the criteria set out in PCT Article 33(2)-(3), because the prior art documents do not disclose or suggest the feature of the axial gap distance, the ratio of the pitch length and the ratio of the long pitch length.

1-2. Dependent claims 2-5, 7-9, 12-15 and 17
Claims 2-5, 7-9, 12-15 and 17 substantially depend on claims 1, 6, 11 and 16 respectively. Consequently, these dependent claims are also considered to be novel and to involve an inventive step under PCT Article 33(2) and (3).

**2. Industrial Applicability**

Claims 1-18 of the present application are industrially applicable under PCT Article 33(4).

**WRITTEN OPINION OF THE INTERNATIONAL SEARCHING AUTHORITY**

International application No.
**PCT/US2009/040483**

**Box No. VI Certain documents cited**

1. Certain published documents (Rule 43bis.1 and 70.10)

| | Application No. Patent No. | Publication date *(day/month/year)* | Filing date *(day/month/year)* | Priority date (valid claim) *(day/month/year)* |
|---|---|---|---|---|
| P,X | PCT/US2008/052794 | 25.09.2008 | 01.02.2008 | 16.03.2007 |

Application No. PCT/US2008/052794 (publication No. WO 2008-115623 A1) does not constitute prior art within the meaning of PCT Rule 64.3, but appears to disclose all the features of claims 1-18. In case the priority of the present application is not valid, this document is relevant for assessing novelty and inventive step.

2. Non-written disclosures (Rule 43bis.1 and 70.9)

| Kind of non-written disclosure | Date of non-written disclosure *(day/month/year)* | Date of written disclosure referring to non-written disclosure *(day/month/year)* |
|---|---|---|

**WRITTEN OPINION OF THE INTERNATIONAL SEARCHING AUTHORITY**

International application No.

**PCT/US2009/040483**

**Box No. VIII Certain observations on the international application**

The following observations on the clarity of the claims, description, and drawings or on the question whether the claims are fully supported by the description, are made:

Claim 4 is defined in reference to the angle of claim 1. However, said angle was not appeared in claim 1.

# PATENT COOPERATION TREATY

# PCT

## INTERNATIONAL SEARCH REPORT

**(PCT Article 18 and Rules 43 and 44)**

| Applicant's or agent's file reference<br>39640-PCT | **FOR FURTHER ACTION** | see Form PCT/ISA/220<br>as well as, where applicable, item 5 below. |
|---|---|---|
| International application No.<br>**PCT/US2009/040483** | International filing date *(day/month/year)*<br>**14 APRIL 2009 (14.04.2009)** | (Earliest) Priority Date *(day/month/year)*<br>11 SEPTEMBER 2008 (11.09.2008) |
| Applicant<br>**WENGER MANUFACTURING, INC. et al** | | |

This International search report has been prepared by this International Searching Authority and is transmitted to the applicant according to Article 18. A copy is being transmitted to the International Bureau.

This international search report consists of a total of 3 sheets.

☐ It is also accompanied by a copy of each prior art document cited in this report.

1. **Basis of the report**
   a. With regard to the **language**, the international search was carried out on the basis of :
      ☒ the international application in the language in which it was filed
      ☐ a translation of the international application into _____ , which is the language of a translation furnished for the purposes of international search (Rules 12.3(a) and 23.1(b))
   b. ☐ This international search report has been established taking into account the **rectification of an obvious mistake** authorized by or notified to this Authority under Rule 91 (Rule 43.6*bis*(a)).
   c. ☐ With regard to any **nucleotide and/or amino acid sequence** disclosed in the international application, see Box No. I.
2. ☐ **Certain claims were found unsearchable** (See Box No. II)
3. ☐ **Unity of invention is lacking** (See Box No. III)
4. With regard to the **title,**
   ☒ the text is approved as submitted by the applicant.
   ☐ the text has been established by this Authority to read as follows:
5. With regard to the **abstract,**
   ☒ the text is approved as submitted by the applicant.
   ☐ the text has been established, according to Rule 38.2, by this Authority as it appears in Box No. IV. The applicant may, within one month from the date of mailing of this international search report, submit comments to this Authority.
6. With regard to the drawings,
   a. the figure of the **drawings** to be published with the abstract is Figure No. 3
      ☐ as suggested by the applicant.
      ☒ as selected by this Authority, because the applicant failed to suggest a figure.
      ☐ as selected by this Authority, because this figure better characterizes the invention.
   b. ☐ none of the figure is to be published with the abstract.

**INTERNATIONAL SEARCH REPORT**

International application No.
**PCT/US2009/040483**

**A. CLASSIFICATION OF SUBJECT MATTER**

***A23P 1/12(2006.01)i, A23N 17/00(2006.01)i, A47J 43/04(2006.01)i***

According to International Patent Classification (IPC) or to both national classification and IPC

**B. FIELDS SEARCHED**

Minimum documentation searched (classification system followed by classification symbols)
IPC A21D 8/00, B29C 47/74, A23G 3/02, A23P 1/12

Documentation searched other than minimum documentation to the extent that such documents are included in the fields searched
Korean Utility models and applications for Utility models since 1975
Japanese Utility models and applications for Utility models since 1975

Electronic data base consulted during the international search (name of data base and, where practicable, search terms used)
eKOMPASS(KIPO internal), PAJ & Keyword: extruder, screw, steam and twin-screw

**C. DOCUMENTS CONSIDERED TO BE RELEVANT**

| Category* | Citation of document, with indication, where appropriate, of the relevant passages | Relevant to claim No. |
|---|---|---|
| A | US 5,932,264 A (RONALD. HURD et al.) 3 AUGUST 1999<br>See abstract, columns 2-10, claims 1-9 and figures 1-3. | 1-18 |
| A | US 2007-0237022 A1 (PHILIP B. WILTZ et al.) 11 OCTOBER 2007<br>See the whole document. | 1-18 |
| A | US 2007-0148320 A1 (KOSUKE UCHIYAMA) 28 JUNE 2007<br>See the whole document. | 1-18 |
| A | US 6,609,819 B2 (BOBBIE W. HAUCK et al.) 26 AUGUST 2003<br>See the whole document. | 1-18 |
| A | US 3,970,761 A1 (LA VON GENE VENGER et al.) 20 JULY 1976<br>See the whole document. | 1-18 |
| A | JP 61-285961 A (MITSUBISHI KAKOKI KAISHA LTD.) 16 DECEMBER 1986<br>See the whole document. | 1-18 |
| P,X | WO 2008-115623 A1 (WENGER MANUFATURING INC.) 25 SEPTEMBER 2008<br>See the whole document. | 1-18 |

☐ Further documents are listed in the continuation of Box C. ☒ See patent family annex.

* Special categories of cited documents:
"A" document defining the general state of the art which is not considered to be of particular relevance
"E" earlier application or patent but published on or after the international filing date
"L" document which may throw doubts on priority claim(s) or which is cited to establish the publication date of citation or other special reason (as specified)
"O" document referring to an oral disclosure, use, exhibition or other means
"P" document published prior to the international filing date but later than the priority date claimed
"T" later document published after the international filing date or priority date and not in conflict with the application but cited to understand the principle or theory underlying the invention
"X" document of particular relevance; the claimed invention cannot be considered novel or cannot be considered to involve an inventive step when the document is taken alone
"Y" document of particular relevance; the claimed invention cannot be considered to involve an inventive step when the document is combined with one or more other such documents,such combination being obvious to a person skilled in the art
"&" document member of the same patent family

| Date of the actual completion of the international search | Date of mailing of the international search report |
|---|---|
| 24 NOVEMBER 2009 (24.11.2009) | **24 NOVEMBER 2009 (24.11.2009)** |
| Name and mailing address of the ISA/KR<br>Korean Intellectual Property Office<br>Government Complex-Daejeon, 139 Seonsa-ro, Seo-gu, Daejeon 302-701, Republic of Korea<br>Facsimile No. 82-42-472-7140 | Authorized officer<br>Lee, Jae Yeong<br>Telephone No. 82-42-481-8169 |

**INTERNATIONAL SEARCH REPORT**

Information on patent family members

International application No.

**PCT/US2009/040483**

| Patent document cited in search report | Publication date | Patent family member(s) | Publication date |
|---|---|---|---|
| US 05932264 A | 03.08.1999 | AU 1998-93870 A1 | 15.09.1998 |
| | | US 06129010 A | 10.10.2000 |
| | | WO 1999-017622 A1 | 15.04.1999 |
| US 2007-0237022 A1 | 11.10.2007 | US 2007-0237850 A1 | 11.10.2007 |
| | | WO 2007-121176 A2 | 25.10.2007 |
| US 2007-0148320 A1 | 28.06.2007 | EP 1674502 A1 | 28.06.2006 |
| | | JP 04-044952 B2 | 22.11.2007 |
| | | JP 4044952 B2 | 06.02.2008 |
| | | WO 2005-030845 A1 | 07.04.2005 |
| | | WO 2005-030845 A1 | 07.04.2005 |
| US 06609819 B2 | 26.08.2003 | AU 2002-303930 B2 | 31.05.2002 |
| | | BR 0211403 A | 09.11.2004 |
| | | CA 2454182 A1 | 06.02.2003 |
| | | CA 2454182 C | 07.07.2009 |
| | | CN 1535199 A | 06.10.2004 |
| | | EP 1417083 A2 | 12.05.2004 |
| | | JP 3925726 B2 | 06.06.2007 |
| | | JP 03-925726 B2 | 09.03.2007 |
| | | JP 2005-506062 A | 03.03.2005 |
| | | KR 10-0915248 B1 | 03.09.2009 |
| | | PA 04000619 A | 25.06.2004 |
| | | US 2003-210605 A1 | 13.11.2003 |
| | | US 2003-0116034 A1 | 26.06.2003 |
| | | US 2003-0112698 A1 | 19.06.2003 |
| | | US 06688217 B2 | 10.02.2004 |
| | | WO 2003-009982 A2 | 06.02.2003 |
| US 03970761 A1 | 20.07.1976 | JP 1180400 C | 09.12.1983 |
| | | JP 1281253 C | 13.09.1985 |
| | | JP 51-144754 A | 13.12.1976 |
| | | JP 51-144755 A | 13.12.1976 |
| | | JP 56-025301 B | 11.06.1981 |
| | | JP 56-042251 B | 03.10.1981 |
| | | US 04042715 A | 16.08.1977 |
| | | US 04099455 A | 11.07.1978 |
| JP 61-285961 A | 16.12.1986 | None | |
| WO 2008-115623 A1 | 25.09.2008 | US 2008-0223223 A1 | 18.09.2008 |

UNITED STATES PATENT AND TRADEMARK OFFICE

UNITED STATES DEPARTMENT OF COMMERCE
United States Patent and Trademark Office
Address: COMMISSIONER FOR PATENTS
P.O. Box 1450
Alexandria, Virginia 22313-1450
www.uspto.gov

| APPLICATION NO. | FILING DATE | FIRST NAMED INVENTOR | ATTORNEY DOCKET NO. | CONFIRMATION NO. |
|---|---|---|---|---|
| 12/980,018 | 12/28/2010 | LaVon Wenger | 39640-CNT2 | 4025 |

23589 7590 03/14/2011
Hovey Williams LLP
10801 Mastin Blvd., Suite 1000
Overland Park, KS 66210

| EXAMINER |
|---|

| ART UNIT | PAPER NUMBER |
|---|---|
| 1782 | |

| MAIL DATE | DELIVERY MODE |
|---|---|
| 03/14/2011 | PAPER |

**Please find below and/or attached an Office communication concerning this application or proceeding.**

The time period for reply, if any, is set in the attached communication.

UNITED STATES PATENT AND TRADEMARK OFFICE

Commissioner for Patents
United States Patent and Trademark Office
P.O. Box 1450
Alexandria, VA 22313-1450
www.uspto.gov

MAR 14 2011

CT

| | | |
|---|---|---|
| In re application of<br>LaVon Wenger et al<br>Serial No. 12/980,018<br>Filed: December 28, 2010<br>For: METHOD AND APPARATUS FOR PRODUCING FULLY COOKED EXTRUDATES WITH SIGNIFICANTLY REDUCED SPECIFIC MECHANICAL ENERGY INPUTS | : | DECISION ON REQUEST TO PARTICIPATE IN PATENT PROSECUTION HIGHWAY PROGRAM AND PETITION TO MAKE SPECIAL UNDER 37 CFR 1.102(a) |

This is a decision on the request to participate in the PCT Patent Prosecution Highway (PCT-PPH) pilot program and the petition under 37 CFR 1.102(a), filed December 28, 2010, to make the above-identified application special.

The request and petition are **GRANTED**.

A grantable request to participate in the PCT-PPH pilot program and petition to make special require:

(1) The U.S. application must disclose an eligible relationship to one or more PCT applications where the ISA or IPEA are the JPO, EPO, USPTO or KIPO;

(2) At least one claim in the PCT application has novelty, inventive step, and industrial applicability and must be free of any observations in Box VIII in the latest work product in the international stage or applicant must identify and explain why the claim(s) is/are not subject to the observation in Box VIII;

(3) Applicant must submit a copy of the claim(s) from the PCT application(s) that have novelty, inventive step, and industrial applicability along with an English translation thereof and a statement that the English translation is accurate, if the claims are not in the English language;

(4) Applicant must submit a claims correspondence table in English and all the independent claims in the U.S. application must sufficiently correspond or be amended to sufficiently correspond to the claim(s) that have novelty, inventive step, and industrial applicability in the PCT application(s);

(5) Examination of the U.S. application has not begun;

(6) Applicant must submit a copy of the latest international work product from the PCT application indicating that the claim(s) have novelty, inventive step, and industrial applicability along with an English translation thereof if the latest international work product is not in the English language; and

(7) Applicant must submit an IDS listing the documents cited by the PCT examiner in the international work product along with copies of documents except U.S. patents or U.S. patent application publications.

The request to participate in the PPH program and petition comply with the above requirements. Accordingly, the above-identified application has been accorded "special" status.

The application is being forwarded to the examiner for action on the merits commensurate with this decision.

Any inquiry regarding this decision should be directed to Christine Tierney, Quality Assurance Specialist, at (571) 272-1055.

All other inquiries concerning the examination or status of the application is accessible in the PAIR system at http://www.uspto.gov/ebc/index.html.

/Christine Tierney/

Christine Tierney
Quality Assurance Specialist
Technology Center 1700

PTO/SB/20PCT-US (09-10)
Approved for use through 01/31/2012. OMB 0651-0058
U.S. Patent and Trademark Office; U. S. DEPARTMENT OF COMMERCE
Under the Paperwork Reduction Act of 1995, no persons are required to respond to a collection of information unless it displays a valid OMB control number.

# REQUEST FOR PARTICIPATION IN THE PATENT COOPERATION TREATY - PATENT PROSECUTION HIGHWAY (PCT-PPH) PILOT PROGRAM IN A U.S. APPLICATION WHERE THE USPTO WAS THE ISA OR IPEA

| | | | |
|---|---|---|---|
| Application No: | 12/980,039 | Filing date: | December 28, 2010 |
| First Named Inventor: | David A. Ferrera | | |
| Title of the Invention: | BLOOD FLOW RESTORATION AND THROMBUS MANAGEMENT METHODS | | |

**THIS REQUEST FOR PARTICIPATION IN THE PCT-PPH PILOT PROGRAM ALONG WITH THE REQUIRED DOCUMENTS MUST BE SUBMITTED VIA EFS-WEB. INFORMATION REGARDING EFS-WEB IS AVAILABLE AT HTTP://WWW.USPTO.GOV/EBC/EFS_HELP.HTML**

**APPLICANT HEREBY REQUESTS PARTICIPATION IN THE PCT-PPH PROGRAM AND PETITIONS TO MAKE THE ABOVE-IDENTIFIED APPLICATION SPECIAL UNDER THE PCT-PPH PROGRAM.**

The above-identified application is (1) a national stage entry of the corresponding PCT application, or (2) a national stage entry of another PCT application which claims priority to the corresponding PCT application, or (3) a national application that claims domestic/ foreign priority to the corresponding PCT application, or (4) a national application which forms the basis for the priority claim in the corresponding PCT application, or (5) a continuing application of a U.S. application that satisfies one of (1) to (4) above, or (6) a U.S. application that claims domestic benefit to a U.S. provisional application which forms the basis for the priority claim in the corresponding PCT application.

**The corresponding PCT application number(s) is/are:** PCT/US2010/062532

**The international date of the corresponding PCT application(s) is/are:**

December 30, 2010

**I. List of Required Documents:**

a. **A copy of the latest international work product (WO/ISA, WO/IPEA, or IPER) in the above–identified corresponding PCT application(s)**

- [x] Is attached
- [ ] Is not attached because the document is already in the U.S. application.

b. **A copy of all claims which were indicated as having novelty, inventive step and industrial applicability in the above-identified corresponding PCT application(s).**

- [x] Is attached.
- [ ] Is not attached because the document is already in the U.S. application.

c. **English translations of the documents in a. and b. above are attached (if the documents are not in the English language). A statement that the English translation is accurate is attached for the document in b. above.**



This collection of information is required by 35 U.S.C. 119, 37 CFR 1.55, and 37 CFR 1.102(d). The information is required to obtain or retain a benefit by the public, which is to file (and by the USPTO to process) an application. Confidentiality is governed by 35 U.S.C. 122 and 37 CFR 1.11 and 1.14. This collection is estimated to take 2 hours to complete, including gathering, preparing, and submitting the completed application form to the USPTO. Time will vary depending upon the individual case. Any comments on the amount of time you require to complete this form and/or suggestions for reducing this burden should be sent to the Chief Information Officer, U.S. Patent and Trademark Office, U.S. Department of Commerce, P.O. Box 1450, Alexandria, VA 22313-1450. DO NOT SEND FEES OR COMPLETED FORMS TO THIS ADDRESS.

Under the Paperwork Reduction Act of 1995, no persons are required to respond to a collection of information unless it displays a valid OMB control number.

# REQUEST FOR PARTICIPATION IN THE PCT-PPH PILOT PROGRAM IN A U.S. APPLICATION WHERE THE USPTO WAS THE ISA OR IPEA

(continued)

| | |
|---|---|
| Application No.: | 12/980,039 |
| First Named Inventor: | David A. Ferrera |

d. **(1) An information disclosure statement listing the documents cited in the international work products (ISR, WO/ISA, WO/IPEA, IPER) of the corresponding PCT application.**

☐ Is attached

☒ Has already been filed in the above-identified U.S. application on Dec. 28, 2010 and Apr. 19, 2011

**(2) Copies of all documents (except) for U.S. patents or U.S. patent application publications)**

☐ Are attached.

☒ Have already been filed in the above-identified U.S. application on Apr. 19, 2011

**II. Claims Correspondence Table:**

| Claims in US Application | Patentable Claims in the corresponding PCT Application | Explanation regarding the correspondence |
|---|---|---|
| 1-10 | - | Canceled |
| 11-18 | 73-80 | Identical |
| 19 | 81 | Identical except that multiple dependencies removed |
| 20 | 82 | Identical |
| 21-26 | 73 | Dependent claims (e.g., narrower in scope than Claim 73) |
| 27-31 | 77 | Dependent claims (e.g., narrower in scope than Claim 77) |
| 32-35 | 73 | Dependent claims (e.g., narrower in scope than Claim 73) |
| 36-38 | 77 | Dependent claims (e.g., narrower in scope than Claim 77) |
| | | |
| | | |
| | | |
| | | |
| | | |
| | | |
| | | |
| | | |
| | | |
| | | |
| | | |

**III. All the claims in the US application sufficiently correspond to the patentable claims in the corresponding PCT application.**

| | |
|---|---|
| Signature /Michael R. Christensen/ | Date April 26, 2011 |
| Name (Print/Typed) Michael R. Christensen | Registration Number 57505 |

# Privacy Act Statement

The **Privacy Act of 1974 (P.L. 93-579)** requires that you be given certain information in connection with your submission of the attached form related to a patent application or patent. Accordingly, pursuant to the requirements of the Act, please be advised that: (1) the general authority for the collection of this information is 35 U.S.C. 2(b)(2); (2) furnishing of the information solicited is voluntary; and (3) the principal purpose for which the information is used by the U.S. Patent and Trademark Office is to process and/or examine your submission related to a patent application or patent. If you do not furnish the requested information, the U.S. Patent and Trademark Office may not be able to process and/or examine your submission, which may result in termination of proceedings or abandonment of the application or expiration of the patent.

The information provided by you in this form will be subject to the following routine uses:

1. The information on this form will be treated confidentially to the extent allowed under the Freedom of Information Act (5 U.S.C. 552) and the Privacy Act (5 U.S.C 552a). Records from this system of records may be disclosed to the Department of Justice to determine whether disclosure of these records is required by the Freedom of Information Act.
2. A record from this system of records may be disclosed, as a routine use, in the course of presenting evidence to a court, magistrate, or administrative tribunal, including disclosures to opposing counsel in the course of settlement negotiations.
3. A record in this system of records may be disclosed, as a routine use, to a Member of Congress submitting a request involving an individual, to whom the record pertains, when the individual has requested assistance from the Member with respect to the subject matter of the record.
4. A record in this system of records may be disclosed, as a routine use, to a contractor of the Agency having need for the information in order to perform a contract. Recipients of information shall be required to comply with the requirements of the Privacy Act of 1974, as amended, pursuant to 5 U.S.C. 552a(m).
5. A record related to an International Application filed under the Patent Cooperation Treaty in this system of records may be disclosed, as a routine use, to the International Bureau of the World Intellectual Property Organization, pursuant to the Patent Cooperation Treaty.
6. A record in this system of records may be disclosed, as a routine use, to another federal agency for purposes of National Security review (35 U.S.C. 181) and for review pursuant to the Atomic Energy Act (42 U.S.C. 218(c)).
7. A record from this system of records may be disclosed, as a routine use, to the Administrator, General Services, or his/her designee, during an inspection of records conducted by GSA as part of that agency's responsibility to recommend improvements in records management practices and programs, under authority of 44 U.S.C. 2904 and 2906. Such disclosure shall be made in accordance with the GSA regulations governing inspection of records for this purpose, and any other relevant ( *i.e.*, GSA or Commerce) directive. Such disclosure shall not be used to make determinations about individuals.
8. A record from this system of records may be disclosed, as a routine use, to the public after either publication of the application pursuant to 35 U.S.C. 122(b) or issuance of a patent pursuant to 35 U.S.C. 151. Further, a record may be disclosed, subject to the limitations of 37 CFR 1.14, as a routine use, to the public if the record was filed in an application which became abandoned or in which the proceedings were terminated and which application is referenced by either a published application, an application open to public inspection or an issued patent.
9. A record from this system of records may be disclosed, as a routine use, to a Federal, State, or local law enforcement agency, if the USPTO becomes aware of a violation or potential violation of law or regulation.

# PATENT COOPERATION TREATY

From the
INTERNATIONAL SEARCHING AUTHORITY

To: MICHAEL CHRISTENSEN
KNOBBE, MARTENS, OLSON & BEAR, LLP
2040 MAIN STREET, 14TH FLOOR
IRVINE, CA 92614

# PCT

WRITTEN OPINION OF THE
INTERNATIONAL SEARCHING AUTHORITY

(PCT Rule 43*bis*.1)

| | |
|---|---|
| Date of mailing *(day/month/year)* | 09 MAR 2011 |
| Applicant's or agent's file reference<br>MDFR-1P1P1WO | **FOR FURTHER ACTION**<br>See paragraph 2 below |

| International application No. | International filing date *(day/month/year)* | Priority date *(day/month/year)* |
|---|---|---|
| PCT/US2010/062532 | 30 December 2010 | 31 December 2009 |

International Patent Classification (IPC) or both national classification and IPC
IPC(8) - A61B 17/22 (2011.01)
USPC - 606/159

Applicant MINDFRAME, INC.

1. This opinion contains indications relating to the following items:

- [x] Box No. I Basis of the opinion
- [ ] Box No. II Priority
- [x] Box No. III Non-establishment of opinion with regard to novelty, inventive step and industrial applicability
- [ ] Box No. IV Lack of unity of invention
- [x] Box No. V Reasoned statement under Rule 43*bis*.1(a)(i) with regard to novelty, inventive step or industrial applicability; citations and explanations supporting such statement
- [ ] Box No. VI Certain documents cited
- [ ] Box No. VII Certain defects in the international application
- [ ] Box No. VIII Certain observations on the international application

2. **FURTHER ACTION**

If a demand for international preliminary examination is made, this opinion will be considered to be a written opinion of the International Preliminary Examining Authority ("IPEA") except that this does not apply where the applicant chooses an Authority other than this one to be the IPEA and the chosen IPEA has notified the International Bureau under Rule 66.1*bis*(b) that written opinions of this International Searching Authority will not be so considered.

If this opinion is, as provided above, considered to be a written opinion of the IPEA, the applicant is invited to submit to the IPEA a written reply together, where appropriate, with amendments, before the expiration of 3 months from the date of mailing of Form PCT/ISA/220 or before the expiration of 22 months from the priority date, whichever expires later.

For further options, see Form PCT/ISA/220.

3. For further details, see notes to Form PCT/ISA/220.

| Name and mailing address of the ISA/US | Date of completion of this opinion | Authorized officer: |
|---|---|---|
| Mail Stop PCT, Attn: ISA/US<br>Commissioner for Patents<br>P.O. Box 1450, Alexandria, Virginia 22313-1450<br>Facsimile No. 571-273-3201 | 15 February 2011 | Blaine R. Copenheaver<br>PCT Helpdesk: 571-272-4300<br>PCT OSP: 571-272-7774 |

**WRITTEN OPINION OF THE INTERNATIONAL SEARCHING AUTHORITY**

International application No.
PCT/US2010/062532

**Box No. I Basis of this opinion**

1. With regard to the **language**, this opinion has been established on the basis of:

   ☒ the international application in the language in which it was filed.

   ☐ a translation of the international application into _____ which is the language of a translation furnished for the purposes of international search (Rules 12.3(a) and 23.1(b)).

2. ☐ This opinion has been established taking into account the **rectification of an obvious mistake** authorized by or notified to this Authority under Rule 91 (Rule 43*bis*.1(a))

3. With regard to any **nucleotide and/or amino acid sequence** disclosed in the international application, this opinion has been established on the basis of a sequence listing filed or furnished:

   a. (means)

   ☐ on paper

   ☐ in electronic form

   b. (time)

   ☐ in the international application as filed

   ☐ together with the international application in electronic form

   ☐ subsequently to this Authority for the purposes of search

4. ☐ In addition, in the case that more than one version or copy of a sequence listing has been filed or furnished, the required statements that the information in the subsequent or additional copies is identical to that in the application as filed or does not go beyond the application as filed, as appropriate, were furnished.

5. Additional comments:

**WRITTEN OPINION OF THE INTERNATIONAL SEARCHING AUTHORITY**

International application No.
PCT/US2010/062532

**Box No. III Non-establishment of opinion with regard to novelty, inventive step and industrial applicability**

The questions whether the claimed invention appears to be novel, to involve an inventive step (to be non obvious), or to be industrially applicable have not been examined in respect of:

☐ the entire international application.

☒ claims Nos. 49-53, 102

because:

☐ the said international application, or the said claims Nos. _____ relate to the following subject matter which does not require an international search *(specify)*:

☒ the description, claims or drawings *(indicate particular elements below)* or said claims Nos. 49-53, 102 are so unclear that no meaningful opinion could be formed *(specify)*:

Claims 49-53, and 102 are multiple dependent claims not drafted in accordance with the second and third sentences of Rule 6.4(a).

☐ the claims, or said claims Nos. _____ are so inadequately supported by the description that no meaningful opinion could be formed *(specify)*:

☒ no international search report has been established for said claims Nos. 49-53, 102

☐ a meaningful opinion could not be formed without the sequence listing; the applicant did not, within the prescribed time limit:

☐ furnish a sequence listing on paper complying with the standard provided for in Annex C of the Administrative Instructions, and such listing was not available to the International Searching Authority in a form and manner acceptable to it.

☐ furnish a sequence listing in electronic form complying with the standard provided for in Annex C of the Administrative Instructions, and such listing was not available to the International Searching Authority in a form and manner acceptable to it.

☐ pay the required late furnishing fee for the furnishing of a sequence listing in response to an invitation under Rule 13*ter*.1(a) or (b).

☐ See Supplemental Box for further details.

**WRITTEN OPINION OF THE INTERNATIONAL SEARCHING AUTHORITY**

International application No.
PCT/US2010/062532

**Box No. V** **Reasoned statement under Rule 43*bis*.1(a)(i) with regard to novelty, inventive step or industrial applicability; citations and explanations supporting such statement**

1. Statement

| | | | |
|---|---|---|---|
| Novelty (N) | Claims | 1-48, 54-101, 103-104 | YES |
| | Claims | None | NO |
| Inventive step (IS) | Claims | 1-48, 54-101, 103-104 | YES |
| | Claims | None | NO |
| Industrial applicability (IA) | Claims | 1-48, 54-101, 103-104 | YES |
| | Claims | None | NO |

2. Citations and explanations:

Claims 1, 33, 34, 54, 64, 73,,77, 83 and 92 meet the criteria set out in PCT Article 33(2)-(3) because the prior art does not teach or fairly suggest certain subject matter in the claims, as follows:

Regarding claim 1, the prior art of record, individually or in combination, does not teach or fairly suggest an expandable tip assembly adapted to address an occlusive thrombus within a blood vessel without distal embolic protection, comprising a variable-stiffness hypotube, a distal portion and a lumen sized and adapted to receive a guidewire; an expandable and reconstrainable scaffold coupled to the distal end of the hypotube, the scaffold being adapted to radially self-expand from a non-expanded configuration to an expanded configuration upon unsheathing of the scaffold and to transition from the expanded configuration to the non-expanded configuration upon resheathing of the scaffold; wherein the scaffold comprises a generally cylindrical configuration; wherein the scaffold comprises a laser-cut tube; wherein the scaffold comprises an open distal end without a distal embolic protection member or device; wherein a proximal end of the scaffold comprises a cut-out section adapted to facilitate re-sheathing of the scaffold; wherein the scaffold comprises a plurality of open cells defined by struts and connected by bridges; a variable-stiffness hypotube wherein the distal portion of the hypotube has a greater flexibility than the proximal portion; wherein the greater flexibility is provided by spiral laser cuts spaced along the distal portion of the hypotube; wherein each strut has two ends, with each end connected to one of the bridges; wherein the scaffold has a chronic outward force (COF) per unit length that does not decrease by more than 75% from an expansion diameter of 1.5 mm to an expansion diameter of 4.5 mm; and wherein the open cells are sized to promote at least one of vessel reperfusion or thrombus removal wherein the spacing between the spiral cuts decreases from a proximal end of the distal portion to a distal end of the distal portion.

Regarding claim 33, the prior art of record, individually or in combination, does not teach or fairly suggest an expandable tip assembly configured to address an occlusive thrombus within a blood vessel without distal embolic protection, comprising an elongate member; an expandable and reconstrainable scaffold coupled to the distal end of the hypotube, the scaffold being adapted to radially self-expand from a non-expanded configuration to an expanded configuration and to transition from the expanded configuration to the non-expanded configuration upon unsheathing and re-sheathing of the scaffold; wherein the scaffold comprises a laser-cut tube; wherein the scaffold is coupled to the distal end of the elongate member by a plurality of tether lines; wherein the scaffold comprises an open distal end without a distal embolic protection member or device; wherein the scaffold comprises a plurality of open cells defined by struts and connected by bridges, a proximal end of the scaffold comprises a scooped-out section configured to facilitate re-sheathing of the scaffold; wherein each strut has two ends, with each end connected to one of the bridges; and wherein the open cells are sized to promote at least one of vessel reperfusion or thrombus removal.

Regarding claim 34, the prior art of record, individually or in combination, does not teach or fairly suggest a system comprising a plurality of expandable tip assemblies configured to address an occlusive thrombus within a blood vessel for providing progressive therapy without distal embolic protection, the system comprising a first expandable tip assembly comprising a first elongate member and a first self-expanding scaffold; wherein the first self-expanding scaffold is coupled to a distal end of the first elongate member; wherein the first self-expanding scaffold comprises an open distal end without a distal embolic protection member or device; wherein the first self-expanding scaffold comprises open cells formed by a pattern of struts and bridges, wherein said cells have a cell size configured to hinder penetration of thrombus material within the first self-expanding scaffold, thereby increasing an amount of blood flow through the first self-expanding scaffold; and a second expandable tip assembly comprising a second elongate member and a second self-expanding scaffold; herein the second self-expanding scaffold is coupled to a distal end of the second elongate member; wherein the second self-expanding scaffold comprises an open distal end without a distal embolic protection member or device; wherein the second self-expanding scaffold comprises open cells formed by a pattern of struts and bridges, wherein said cells have a cell size larger than the cell size of the first self-expanding scaffold, wherein said cell size of the second self-expanding scaffold is configured to enhance penetration of thrombus material within the scaffold to facilitate capture of the thrombus; wherein, in use, the first self-expanding scaffold and the second self-expanding scaffold are adapted to radially self-expand from a non-expanded configuration to an expanded configuration and to transition from the expanded configuration to the nonexpanded configuration upon unsheathing and re-sheathing of the first and second selfexpanding scaffolds.

**Supplemental Box**

**In case the space in any of the preceding boxes is not sufficient.**
Continuation of:

Regarding claim 54, the prior art of record, individually or in combination, does not teach or fairly suggest a method of using a plurality of expandable tip assemblies adapted to address an occlusive thrombus within a blood vessel for providing progressive therapy, the method comprising identifying a thrombus within a blood vessel; inserting an expandable reperfusion device within the blood vessel to the location of the thrombus, wherein the expandable reperfusion device comprises an expandable reperfusion scaffold having a plurality of interconnected struts that form cells having a cell size that is sized and configured to reduce protrusion of the thrombus within the reperfusion scaffold, thereby increasing a diameter of a flow path established by the reperfusion scaffold; deploying the reperfusion device within the thrombus, thereby compressing the thrombus against the inner vessel wall and establishing one or more blood flow channels through the thrombus, wherein the one or more blood flow channels facilitate natural lysis of the thrombus; removing the reperfusion device; inserting an expandable thrombus removal device within the blood vessel to the location ofthe thrombus, wherein the expandable thrombus removal device comprises an expandable removal scaffold having a plurality of interconnected struts that form cells having a cell size that is sized and configured to allow thrombus penetration within the cells, thereby facilitating engagement ofthe thrombus by the removal scaffold; deploying the thrombus removal device within a remaining portion of the thrombus, thereby engaging the remaining portion of the thrombus; extracting the remaining portion of the thrombus engaged by the thrombus removal device from the blood vessel; and removing the thrombus removal device.

Regarding claim 64, the prior art of record, individually or in combination, does not teach or fairly suggest a method of using a plurality of expandable tip assemblies adapted to address an occlusive thrombus within a blood vessel for providing progressive therapy, the method comprising inserting an expandable reperfusion device within an occluded blood vessel having a thrombus; positioning the expandable reperfusion device to span at least a portion of a length ofthe thrombus; wherein the expandable reperfusion device comprises a self-expanding reperfusion scaffold having a plurality of interconnected struts that form cells sized and configured to inhibit protrusion of the thrombus into the reperfusion scaffold, thereby increasing a diameter of a flow path established by the reperfusion scaffold; deploying the reperfusion device within the thrombus, thereby compressing the thrombus against the inner vessel wall and establishing blood flow through the occluded blood vessel, wherein the established blood flow facilitates natural lysis ofthe thrombus; macerating the thrombus; wherein at least one ofthe natural lysis and the maceration fragment the thrombus until only a portion ofthe thrombus remains; removing the reperfusion device; inserting a thrombus removal device within the blood vessel to span at least a portion of a length of the remaining thrombus, wherein the thrombus removal device comprises a self-expanding removal scaffold having a plurality of interconnected struts that form cells having a cell size that is sized and configured to allow thrombus protrusion within the cells, thereby facilitating engagement ofthe remaining thrombus by the removal scaffold; deploying the thrombus removal device within the remaining thrombus to engage the remaining thrombus; and removing the thrombus removal device, thereby extracting the remaining thrombus.

Regarding claim 73, the prior art of record, individually or in combination, does not teach or fairly suggest a thrombus management method for addressing an occlusive thrombus within a blood vessel without distal embolic protection, the method comprising: identifying a cerebral artery having an occlusive thrombus; inserting a guide catheter into a patient; inserting a guide wire through the guide catheter into the cerebral artery and through the thrombus; inserting a microcatheter over the guidewire and through the thrombus; positioning a distal end of the microcatheter within about a centimeter past the thrombus; inserting an expandable tip assembly comprising a scaffold through the microcatheter; retracting the microcatheter, thereby causing the scaffold to expand; wherein said expansion compresses the thrombus against a wall of the cerebral artery; wherein said compression of the thrombus restores blood flow within the cerebral artery; wherein said restored blood flow facilitates natural lysis ofthe thrombus; and macerating the thrombus by resheathing the scaffold and unsheathing the scaffold, thereby facilitating mechanical lysis and fragmentation of the thrombus to release embolic particles; wherein the embolic particles flow in the direction of the blood flow and are not captured by any distal embolic protection member, but are instead lysed through the natural lysis process due to the restored blood flow.

Regarding claim 77, the prior art of record, individually or in combination, does not teach or fairly suggest a thrombus management method for addressing an occlusive thrombus within a blood vessel, the method comprising identifying an occluded blood vessel having an occlusive thrombus; selecting an expandable tip assembly based, at least in part, on a diameter of the identified occluded blood vessel, the expandable tip assembly comprising a proximal elongate member and a distal self-expanding scaffold; inserting the selected expandable tip assembly within the occluded vessel through a microcatheter such that the self-expanding scaffold is positioned at a location of the thrombus in a non-expanded configuration; retracting the microcatheter, thereby causing the scaffold to expand to an expanded configuration; wherein said expansion compresses the thrombus against a wall of the blood vessel; wherein said compression of the thrombus restores blood flow within the blood vessel; wherein said restored blood flow facilitates natural lysis of the thrombus; and macerating the thrombus by resheathing the self-expanding scaffold and unsheathing the self-expanding scaffold within the microcatheter, thereby facilitating mechanical lysis and fragmentation of the thrombus.

Regarding claim 83, the prior art of record, individually or in combination, does not teach or fairly suggest a thrombus management method for addressing an occlusive thrombus within a blood vessel by providing multiple layer embolus removal, comprising identifying an embolus within a cerebral artery; inserting an expandable reperfusion device within the cerebral artery to the location of the embolus; expanding the reperfusion device within the embolus, thereby establishing one or more blood flow channels through the embolus, wherein the one or more blood flow channels facilitate natural lysis of the embolus to remove one or more outer layers of the embolus; removing the reperfusion device; inserting an expandable embolus removal device within the cerebral artery to the location of the embolus; expanding the embolus removal device within a remaining portion of the embolus, thereby engaging the remaining portion of the embolus; extracting the remaining portion of the embolus with the embolus removal device from the cerebral artery; and removing the embolus removal device.

**Supplemental Box**

**In case the space in any of the preceding boxes is not sufficient.**
Continuation of:

Regarding claim 92, the prior art of record, individually or in combination, does not teach or fairly suggest a thrombus management method for addressing an occlusive thrombus within a blood vessel by providing multiple layer embolus removal from a cerebral artery, comprising identifying an embolus within a cerebral artery; wherein the embolus comprises an outer layer and an inner core; establishing one or more blood flow channels through the embolus to restore blood flow; disturbing the embolus by mechanical maceration of the embolus to release embolic particles from the outer layer of the embolus, thereby allowing the embolic particles to freely flow in the direction of the blood flow without capturing said embolic particles; wherein said restored blood flow causes lysis of the embolic particles; and extracting the inner core of the embolus.

Claims 2-32, 35-48, 55-63, 65-72, 74-76, 78-82, 84-91, 93-101, and 103-104 depend from base Claims 1, 33, 34, 54, 64, 73, 77, 83 and 92, and therefore have novelty for at least the same reasons as do base Claims 1, 33, 34, 54, 64, 73, 77, 83 and 92.

The following prior art is made of record to support and further define the reasons for allowance of base Claims 1, 33, 34, 54, 64, 73, 77, 83 and 92:

(i) Fulkerson discloses an expandable tip assembly adapted to address an occlusive thrombus (Title; Abstract) within a blood vessel without distal embolic protection (Fig. 1 shows no distal embolic protection, ie- screen or filter), comprising a hypotube (Para. [0047] The instant revascularization system delivery device may be made from materials knownto artisans, including stainless steel hypotube, stainless steel coil, polymerjackets, and/or radiopaque jackets; Para. [0050] distal segment 120 comprises inner catheter 122 and revascularization device 124 (as shown here in one embodiment having uniform cells, variable cells likewise being within)) having a proximal portion (Para. [0049] proximal segment 110 and distal segment 120), a distal portion (Para. [0049]) and a lumen (Para. [0047] delivery device 130 provides a conduit in fluid communication with the lumen of the catheter-based revascularization system 100 enabling users) sized and adapted to receive a guidewire (Para. [0003] catheter systems having guidewires to access and emplace improved neurological medical devices into the cerebral vasculature); an expandable and reconstrainable scaffold coupled to the distal end of the hypotube, the scaffold being adapted to radially self-expand from a non-expanded configuration to an expanded configuration upon unsheathing of the scaffold and to transition from the expanded configuration to the non-expanded configuration upon resheathing of the scaffold (Para. [0057] After the embolus is lysed, revascularization device 124 is sheathed into outer catheter 112 and removed from the body); wherein the scaffold comprises a generally cylindrical configuration (Fig. 2 at 120); wherein the scaffold comprises a laser-cut tube (Para. [0050] is made from stainless steel coil, stainless steel wire, or ribbon or laser cut hypotube and is of a suitable length and diameter to move through outer catheter 112 during deployment); wherein the scaffold comprises an open distal end without a distal embolic protection member or device (Fig. 2 shows open distal end without distal embolic protection member); wherein a proximal end of the scaffold comprises a cut-out section adapted to facilitate re-sheathing of the scaffold (Para. [0057] After the embolus is lysed, revascularization device 124 is sheathed into outer catheter 112 and removed from the body); wherein the scaffold comprises a plurality of open cells defined by struts and connected by bridges (Fig. 2 defined by the open spaces in 124); but the prior art of record, individually or in combination, does not teach or fairly suggest a variable-stiffness hypotube wherein the distal portion of the hypotube has a greater flexibility than the proximal portion; wherein the greater flexibility is provided by spiral laser cuts spaced along the distal portion of the hypotube; wherein each strut has two ends, with each end connected to one of the bridges; wherein the scaffold has a chronic outward force (COF) per unit length that does not decrease by more than 75% from an expansion diameter of 1.5 mm to an expansion diameter of 4.5 mm; and wherein the open cells are sized to promote at least one of vessel reperfusion or thrombus removal wherein the spacing between the spiral cuts decreases from a proximal end of the distal portion to a distal end of the distal portion.

(ii) Fulkerson discloses an expandable tip assembly configured to address an occlusive thrombus (Title; Abstract) within a blood vessel without distal embolic protection (Fig. 1 shows no distal embolic protection, ie- screen or filter), comprising an elongate member (Fig. 1 at 110); an expandable and reconstrainable scaffold coupled to the distal end of the hypotube (Fig. 2 at 120), the scaffold being adapted to radially self-expand from a non-expanded configuration to an expanded configuration (Para. [0007] a self-expanding radial filter/revascularization device and basket assembly detachably tethered to the catheter system which functions in at least three respective modes) and to transition from the expanded configuration to the non-expanded configuration upon unsheathing and re-sheathing of the scaffold (Para. [0057] After the embolus is lysed, revascularization device 124 is sheathed into outer catheter 112 and removed from the body); wherein the scaffold comprises a laser-cut tube (Para. [0050] is made from stainless steel coil, stainless steel wire, or ribbon or laser cut hypotube and is of a suitable length and diameter to move through outer catheter 112 during deployment); wherein the scaffold is coupled to the distal end of the elongate member by a plurality of tether lines (Fig. 2 where 122 has tether lines to 124); wherein the scaffold comprises an open distal end without a distal embolic protection member or device (Fig. 2 shows open distal end without distal embolic protection member); wherein the scaffold comprises a plurality of open cells defined by struts and connected by bridges (Fig. 2 defined by the open spaces in 124), but the prior art of record, individually or in combination, does not teach or fairly suggest wherein a proximal end of the scaffold comprises a scooped-out section configured to facilitate re-sheathing of the scaffold; wherein each strut has two ends, with each end connected to one of the bridges; and wherein the open cells are sized to promote at least one of vessel reperfusion or thrombus removal.

**Supplemental Box**

**In case the space in any of the preceding boxes is not sufficient.**
Continuation of:

(iii) Fulkerson discloses a system comprising a plurality of expandable tip assemblies configured to address an occlusive thrombus (Title; Abstract) within a blood vessel for providing progressive therapy without distal embolic protection (Fig. 1 shows no distal embolic protection, ie- screen or filter), the system comprising a first expandable tip assembly comprising a first elongate member (Fig. 1 at 110) and a first self-expanding scaffold (Fig. 2 at 120); wherein the first self-expanding scaffold is coupled to a distal end of the first elongate member (Fig. 2); wherein the first self-expanding scaffold comprises an open distal end without a distal embolic protection member or device (Fig. 2 shows open distal end without distal embolic protection member); wherein the first self-expanding scaffold comprises open cells formed by a pattern of struts and bridges (Fig. 2 defined by the open spaces in 124), but the prior art of record, individually or in combination, does not teach or fairly suggest wherein said cells have a cell size configured to hinder penetration of thrombus material within the first self-expanding scaffold, thereby increasing an amount of blood flow through the first self-expanding scaffold; and a second expandable tip assembly comprising a second elongate member and a second self-expanding scaffold; herein the second self-expanding scaffold is coupled to a distal end of the second elongate member; wherein the second self-expanding scaffold comprises an open distal end without a distal embolic protection member or device; wherein the second self-expanding scaffold comprises open cells formed by a pattern of struts and bridges, wherein said cells have a cell size larger than the cell size of the first self-expanding scaffold, wherein said cell size of the second self-expanding scaffold is configured to enhance penetration of thrombus material within the scaffold to facilitate capture of the thrombus; wherein, in use, the first self-expanding scaffold and the second self-expanding scaffold are adapted to radially self-expand from a non-expanded configuration to an expanded configuration and to transition from the expanded configuration to the nonexpanded configuration upon unsheathing and re-sheathing of the first and second self expanding scaffolds.

(iv) Brady discloses an expandable tip assembly configured to address an occlusive thrombus (Title; Abstract) within a blood vessel, but with distal embolic protection (Fig. 1 shows a retractable guidewire tip, but with a distal embolic protection, ie- screen or filter), comprising an elongate member (Fig. 1 at 101); the scaffold being adapted to radially self-expand from a non-expanded configuration to an expanded configuration (Para. [0066]) a self-expanding radial filter/revascularization device and basket assembly detachably tethered to the catheter system which functions in at least three respective modes and to transition from the expanded configuration to the non-expanded configuration upon unsheathing and re-sheathing of the scaffold (Para. [0066] The support frame 111 is such that it is naturally expanded as shown in the drawings and can be collapsed inwardly against the sleeve 104); wherein the scaffold comprises a laser-cut tube (Para. [0074] Typically the finishing operations involve processes such as mechanical machining operations, laser machining or chemical machining); wherein the scaffold is coupled to the distal end of the elongate member by a plurality of tether lines (Fig. 1 where 111 has tether lines to 125), but the prior art of record, individually or in combination, does not teach or fairly suggest the device wherein the scaffold comprises an open distal end without a distal embolic protection member or device; wherein the scaffold comprises a plurality of open cells defined by struts and connected by bridges, wherein a proximal end of the scaffold comprises a scooped-out section configured to facilitate re-sheathing of the scaffold; wherein each strut has two ends, with each end connected to one of the bridges; and wherein the open cells are sized to promote at least one of vessel reperfusion or thrombus removal or an expandable and reconstrainable scaffold coupled to the distal end of the hypotube.

Claims 1-48, 54-101, and 103-104 meet the criteria set out in PCT Article 33(4) and thus have industrial applicability because the subject matter claimed can be made or used in industry.

**WHAT IS CLAIMED IS:**

1. An expandable tip assembly adapted to address an occlusive thrombus within a blood vessel without distal embolic protection, comprising:

a variable-stiffness hypotube having a proximal portion, a distal portion and a lumen sized and adapted to receive a guidewire;

wherein the distal portion of the hypotube has a greater flexibility than the proximal portion;

wherein the greater flexibility is provided by spiral laser cuts spaced along the distal portion of the hypotube;

wherein the spacing between the spiral cuts decreases from a proximal end of the distal portion to a distal end of the distal portion;

an expandable and reconstrainable scaffold coupled to the distal end of the hypotube, the scaffold being adapted to radially self-expand from a non-expanded configuration to an expanded configuration upon unsheathing of the scaffold and to transition from the expanded configuration to the non-expanded configuration upon re-sheathing of the scaffold;

wherein the scaffold comprises a generally cylindrical configuration;

wherein the scaffold comprises a laser-cut tube;

wherein the scaffold comprises an open distal end without a distal embolic protection member or device;

wherein a proximal end of the scaffold comprises a cut-out section adapted to facilitate re-sheathing of the scaffold;

wherein the scaffold comprises a plurality of open cells defined by struts and connected by bridges;

wherein each strut has two ends, with each end connected to one of the bridges;

wherein the scaffold has a chronic outward force (COF) per unit length that does not decrease by more than 75% from an expansion diameter of 1.5 mm to an expansion diameter of 4.5 mm; and

wherein the open cells are sized to promote at least one of vessel reperfusion or thrombus removal.

2. The expandable tip assembly of Claim 1, wherein each bridge is connected to four struts.

3. The expandable tip assembly of Claim 1, wherein the scaffold is coupled to the distal end of the hypotube by a plurality of tether lines that extend eccentrically from one half of the distal end of the hypotube.

4. The expandable tip assembly of Claim 1, wherein the scaffold has a chronic outward force (COF) per unit length that does not decrease by more than 50% from a diameter of 1.5 mm to a diameter of 4.5 mm.

5. The expandable tip assembly of Claim 1, wherein the cells of the scaffold have a uniform cell size.

6. The expandable tip assembly of Claim 1, wherein the cells of the scaffold have a variable cell size, and further wherein the cell size of the cells at the end portions of the scaffold are smaller than the cell size of the cells of the middle portion of the scaffold.

7. The expandable tip assembly of Claim 1, wherein the strut thickness is substantially equal to the strut width.

8. The expandable tip assembly of Claim 1, wherein a ratio of strut thickness to strut width is less than at least about 1.4.

9. The expandable tip assembly of Claim 1, wherein the expandable tip assembly comprises a reperfusion device and wherein the cells of the scaffold have a cell size adapted to inhibit protrusion of portions of the thrombus within an interior of the scaffold.

10. The expandable tip assembly of Claim 9, wherein the cells of the scaffold have a cell length of between 2 mm and 4 mm and a cell height between 1 mm and 3 mm in the expanded configuration.

11. The expandable tip assembly of Claim 9, wherein the scaffold has an average chronic outward force across a diameter of 1.5 mm to 4.5 mm of between 0.0040 N and 0.0120 N.

12. The expandable tip assembly of Claim 9, wherein the scaffold has a maximum expansion diameter of 5 mm.

13. The expandable tip assembly of Claim 9, wherein the scaffold has a length of about 30 mm.

14. The expandable tip assembly of Claim 9, wherein an exterior, contact surface of the struts comprises a squared-off or rounded configuration to increase the contact surface area of the scaffold, thereby enhancing compression of the thrombus.

15. The expandable tip assembly of Claim 9, wherein an exterior, contact surface of the struts comprises a pointed or tapered configuration.

16. The expandable tip assembly of Claim 1, wherein the expandable tip assembly comprises a thrombus removal device, and wherein the cells of the scaffold have a cell size adapted to promote protrusion of portions of the thrombus within an interior of the scaffold.

17. The expandable tip assembly of Claim 16, wherein the cells of the scaffold have a cell length of between 4 mm and 6 mm and a cell height between 2 mm and 4 mm in the expanded configuration.

18. The expandable tip assembly of Claim 16, wherein the scaffold has an average chronic outward force across a diameter of 1.5 mm to 4.5 mm of between 0.0020 N and 0.0090 N.

19. The expandable tip assembly of Claim 16, wherein an exterior, contact surface of the struts comprises a pointed or tapered configuration.

20. The expandable tip assembly of Claim 16, wherein the struts comprise one or more surface features adapted to enhance engagement of thrombus material.

21. The expandable tip assembly of Claim 20, wherein the struts comprise one or more grooves.

22. The expandable tip assembly of Claim 20, wherein the struts comprise one or more protrusions or projections.

23. The expandable tip assembly of Claim 16, wherein a central portion of each strut of the scaffold has a greater thickness than adjacent portions of the strut.

24. The expandable tip assembly of Claim 16, wherein the struts comprise multiple flex points along the length of the struts.

25. The expandable tip assembly of Claim 16, wherein the bridges form X-shaped connections between the cells of the scaffold.

26. The expandable tip assembly of Claim 16, wherein the bridges have a greater thickness than adjacent portions of the struts connected to the bridges.

27. The expandable tip assembly of Claim 16, wherein the scaffold has a maximum expansion diameter of 3 mm

28. The expandable tip assembly of Claim 16, wherein the scaffold has a maximum expansion diameter of 5 mm.

29. The expandable tip assembly of Claim 16, wherein the scaffold has a length of about 30 mm.

30. A method of using an expandable tip assembly as in any one of Claims 1 through 29 to address an occlusive thrombus within a blood vessel.

31. A method of using an expandable tip assembly as in any one of Claims 1 through 15 to reperfuse an occluded blood vessel having an occlusive thrombus.

32. A method of using an expandable tip assembly as in any one of Claims 1 through 8 or Claims 16 through 29 to extract thrombus material from an occluded blood vessel.

33. An expandable tip assembly configured to address an occlusive thrombus within a blood vessel without distal embolic protection, comprising:

an elongate member;

an expandable and reconstrainable scaffold coupled to the distal end of the hypotube, the scaffold being adapted to radially self-expand from a non-expanded configuration to an expanded configuration and to transition from the expanded configuration to the non-expanded configuration upon unsheathing and re-sheathing of the scaffold;

wherein the scaffold comprises a laser-cut tube;

wherein the scaffold is coupled to the distal end of the elongate member by a plurality of tether lines;

wherein the scaffold comprises an open distal end without a distal embolic protection member or device;

wherein a proximal end of the scaffold comprises a scooped-out section configured to facilitate re-sheathing of the scaffold;

wherein the scaffold comprises a plurality of open cells defined by struts and connected by bridges;

wherein each strut has two ends, with each end connected to one of the bridges; and

wherein the open cells are sized to promote at least one of vessel reperfusion or thrombus removal.

34. A system comprising a plurality of expandable tip assemblies configured to address an occlusive thrombus within a blood vessel for providing progressive therapy without distal embolic protection, the system comprising:

a first expandable tip assembly comprising a first elongate member and a first self-expanding scaffold;

wherein the first self-expanding scaffold is coupled to a distal end of the first elongate member;

wherein the first self-expanding scaffold comprises an open distal end without a distal embolic protection member or device;

wherein the first self-expanding scaffold comprises open cells formed by a pattern of struts and bridges, wherein said cells have a cell size configured to hinder penetration of thrombus material within the first self-expanding scaffold, thereby increasing an amount of blood flow through the first self-expanding scaffold; and

a second expandable tip assembly comprising a second elongate member and a second self-expanding scaffold;

wherein the second self-expanding scaffold is coupled to a distal end of the second elongate member;

wherein the second self-expanding scaffold comprises an open distal end without a distal embolic protection member or device;

wherein the second self-expanding scaffold comprises open cells formed by a pattern of struts and bridges, wherein said cells have a cell size larger than the cell size of the first self-expanding scaffold, wherein said cell size of the second self-expanding scaffold is configured to enhance penetration of thrombus material within the scaffold to facilitate capture of the thrombus;

wherein, in use, the first self-expanding scaffold and the second self-expanding scaffold are adapted to radially self-expand from a non-expanded configuration to an expanded configuration and to transition from the expanded configuration to the non-expanded configuration upon unsheathing and re-sheathing of the first and second self-expanding scaffolds.

35. The system of Claim 34, further comprising a microcatheter adapted to receive the first and second self-expanding scaffolds and further adapted to be movable with respect to the first and second self-expanding scaffolds to provide the unsheathing and re-sheathing of the first and second self-expanding scaffolds.

36. The system of Claim 34 or 35, wherein the first elongate member and the second elongate member comprise a variable-stiffness hypotube having a lumen.

37. The system of Claim 36, further comprising a guidewire configured to be received by the first elongate member and the second elongate member.

38. The system of Claim 36, wherein a distal section of the variable-stiffness hypotube comprises a laser spiral cut pattern that allows the distal section to bend to navigate through curved portions of the cerebral vasculature.

39. The system of Claim 38, wherein said laser spiral cut pattern spans a length of about 35 cm.

40. The system of Claim 34 or 35, wherein the first elongate member and the second elongate member comprise a wire without a lumen.

41. The system of Claim 34 or 35, wherein the first expandable tip assembly and the second expandable tip assembly have an average chronic outward force across a diameter of 1.5 mm to 4.5 mm that does not decrease by more than 50% to 75%.

42. The system of Claim 34 or 35, wherein the first self-expanding scaffold and the second self-expanding scaffold have a substantially non-zero chronic outward force across a diameter of 1.5 mm to 4.5 mm.

43. The system of Claim 34 or 35, wherein the cells of the first self-expanding scaffold have a cell length of between 2 mm and 4 mm and a cell height between 1 mm and 3 mm in an expanded configuration.

44. The system of Claim 34 or 35, wherein the first self-expanding scaffold has an average chronic outward force across a diameter of 1.5 mm to 4.5 mm of between 0.0040 N and 0.0120 N.

45. The system of Claim 34 or 35, wherein the cells of the second self-expanding scaffold have a cell length of between 4 mm and 6 mm and a cell height between 2 mm and 4 mm in an expanded configuration.

46. The system of Claim 34 or 35, wherein the second self-expanding scaffold has an average chronic outward force across a diameter of 1.5 mm to 4.5 mm of between 0.0020 N and 0.0090 N.

47. The system of Claim 34 or 35, wherein a central portion of each strut of the second self-expanding scaffold has a greater thickness than adjacent portions of the strut.

48. The system of Claim 34 or 35, wherein the first expandable tip assembly comprises a reperfusion device adapted to facilitate blood flow restoration and the second expandable tip assembly comprises a thrombus removal device adapted to be inserted after removal of the reperfusion device, wherein the thrombus removal device is further adapted to facilitate removal of any remaining thrombus material.

49. A kit comprising a plurality of expandable tip assemblies configured to address an occlusive thrombus within a blood vessel for providing progressive therapy without distal embolic protection, the kit comprising:

a first expandable tip assembly as in any one of Claims 1 through 15;

a second expandable tip assembly as in any one of Claims 1 through 8 or Claims 16 through 29.

50. The kit of Claim 49, further comprising a microcatheter adapted to deliver the first expandable tip assembly and the second expandable tip assembly within the blood vessel.

51. The kit of Claim 50, wherein the microcatheter comprises a neuro-microcatheter sized to be inserted within cerebral vasculature of a human patient.

52. The kit of any one of Claims 49-51, further comprising a guide catheter.

53. The kit of any one of Claims 49-51, further comprising a guidewire.

54. A method of using a plurality of expandable tip assemblies adapted to address an occlusive thrombus within a blood vessel for providing progressive therapy, the method comprising:

identifying a thrombus within a blood vessel;

inserting an expandable reperfusion device within the blood vessel to the location of the thrombus,

wherein the expandable reperfusion device comprises an expandable reperfusion scaffold having a plurality of interconnected struts that form cells having a cell size that

is sized and configured to reduce protrusion of the thrombus within the reperfusion scaffold, thereby increasing a diameter of a flow path established by the reperfusion scaffold;

deploying the reperfusion device within the thrombus, thereby compressing the thrombus against the inner vessel wall and establishing one or more blood flow channels through the thrombus,

wherein the one or more blood flow channels facilitate natural lysis of the thrombus;

removing the reperfusion device;

inserting an expandable thrombus removal device within the blood vessel to the location of the thrombus,

wherein the expandable thrombus removal device comprises an expandable removal scaffold having a plurality of interconnected struts that form cells having a cell size that is sized and configured to allow thrombus penetration within the cells, thereby facilitating engagement of the thrombus by the removal scaffold;

deploying the thrombus removal device within a remaining portion of the thrombus, thereby engaging the remaining portion of the thrombus;

extracting the remaining portion of the thrombus engaged by the thrombus removal device from the blood vessel; and

removing the thrombus removal device.

55. The method of Claim 54, wherein the expandable reperfusion device and the expandable thrombus removal device comprise self-expanding devices.

56. The method of Claim 55, wherein the expandable reperfusion device and the expandable thrombus removal device are inserted into the blood vessel within a microcatheter to the location of the thrombus.

57. The method of Claim 56, wherein deploying the reperfusion device comprises retracting the microcatheter, thereby allowing the reperfusion device to expand within the thrombus.

58. The method of Claim 56, wherein deploying the thrombus removal device comprises retracting the microcatheter, thereby allowing the thrombus removal device to expand within the thrombus.

59. The method of Claim 56, wherein removing the reperfusion device comprises resheathing the reperfusion device by advancing the microcatheter over the reperfusion device while keeping the reperfusion device stationary and then removing the microcatheter with the reperfusion device together.

60. The method of Claim 54, wherein an expansion diameter of the reperfusion device is configured to provide increased cell deformation of the reperfusion scaffold, thereby reducing protrusion of thrombus material within the reperfusion scaffold.

61. The method of Claim 54, wherein an expansion diameter of the thrombus removal device is configured to provide reduced cell deformation of the removal scaffold, thereby increasing thrombus penetration within the removal scaffold.

62. The method of Claim 57, further comprising resheathing the reperfusion device within the microcatheter by advancing the microcatheter and then unsheathing the reperfusion device by retracting the microcatheter to provide maceration of the thrombus.

63. The method of Claim 54, wherein the cells of the reperfusion scaffold in an expanded configuration have a cell length of between 2 mm and 4 mm and a cell height between 1 mm and 3 mm and wherein the cells of the removal scaffold in an expanded configuration have a cell length of between 4 mm and 6 mm and a cell height between 2 mm and 4 mm.

64. A method of using a plurality of expandable tip assemblies adapted to address an occlusive thrombus within a blood vessel for providing progressive therapy, the method comprising:

inserting an expandable reperfusion device within an occluded blood vessel having a thrombus;

positioning the expandable reperfusion device to span at least a portion of a length of the thrombus;

wherein the expandable reperfusion device comprises a self-expanding reperfusion scaffold having a plurality of interconnected struts that form cells sized and configured to inhibit protrusion of the thrombus into the reperfusion scaffold, thereby increasing a diameter of a flow path established by the reperfusion scaffold;

deploying the reperfusion device within the thrombus, thereby compressing the thrombus against the inner vessel wall and establishing blood flow through the occluded blood vessel,

wherein the established blood flow facilitates natural lysis of the thrombus;

macerating the thrombus;

wherein at least one of the natural lysis and the maceration fragment the thrombus until only a portion of the thrombus remains;

removing the reperfusion device;

inserting a thrombus removal device within the blood vessel to span at least a portion of a length of the remaining thrombus,

wherein the thrombus removal device comprises a self-expanding removal scaffold having a plurality of interconnected struts that form cells having a cell size that is sized and configured to allow thrombus protrusion within the cells, thereby facilitating engagement of the remaining thrombus by the removal scaffold;

deploying the thrombus removal device within the remaining thrombus to engage the remaining thrombus; and

removing the thrombus removal device, thereby extracting the remaining thrombus.

65. The method of Claim 64, wherein macerating the thrombus comprises sheathing and unsheathing of the reperfusion scaffold, wherein said sheathing and unsheathing causes the reperfusion scaffold to compress and expand.

66. The method of Claim 64 or Claim 65, wherein the reperfusion device and the thrombus removal device are inserted into the blood vessel within a microcatheter.

67. The method of Claim 66, wherein deploying the reperfusion device comprises retracting the microcatheter, thereby allowing the reperfusion device to expand within the thrombus.

68. The method of Claim 66, wherein deploying the thrombus removal device comprises retracting the microcatheter, thereby allowing the thrombus removal device to expand within the thrombus.

69. The method of Claim 67, wherein removing the reperfusion device comprises resheathing the reperfusion device by advancing the microcatheter over the reperfusion

device while keeping the reperfusion device stationary and then removing the microcatheter with the reperfusion device together.

70. The method of Claim 66, wherein an expansion diameter of the reperfusion device is configured to provide increased cell deformation of the reperfusion scaffold, thereby reducing thrombus penetration within an interior of the reperfusion scaffold.

71. The method of Claim 64, wherein an expansion diameter of the thrombus removal device is configured to provide reduced cell deformation of the removal scaffold, thereby increasing thrombus protrusion within the removal scaffold.

72. The method of Claim 64, wherein the cells of the expandable reperfusion device in an expanded configuration have a cell length of between 2 mm and 4 mm and a cell height between 1 mm and 3 mm and wherein the cells of the expandable thrombus removal device in an expanded configuration have a cell length of between 4 mm and 6 mm and a cell height between 2 mm and 4 mm.

73. A thrombus management method for addressing an occlusive thrombus within a blood vessel without distal embolic protection, the method comprising:

identifying a cerebral artery having an occlusive thrombus;

inserting a guide catheter into a patient;

inserting a guide wire through the guide catheter into the cerebral artery and through the thrombus;

inserting a microcatheter over the guidewire and through the thrombus;

positioning a distal end of the microcatheter within about a centimeter past the thrombus;

inserting an expandable tip assembly comprising a scaffold through the microcatheter;

retracting the microcatheter, thereby causing the scaffold to expand;

wherein said expansion compresses the thrombus against a wall of the cerebral artery;

wherein said compression of the thrombus restores blood flow within the cerebral artery;

wherein said restored blood flow facilitates natural lysis of the thrombus; and

macerating the thrombus by resheathing the scaffold and unsheathing the scaffold, thereby facilitating mechanical lysis and fragmentation of the thrombus to release embolic particles;

wherein the embolic particles flow in the direction of the blood flow and are not captured by any distal embolic protection member, but are instead lysed through the natural lysis process due to the restored blood flow.

74. The thrombus management method of Claim 73, further comprising engaging any remaining thrombus material and removing the remaining thrombus material with the expandable tip assembly.

75. The thrombus management method of Claim 73, further comprising removing the expandable tip assembly and inserting a second expandable tip assembly into the microcatheter, the second expandable tip assembly having a self-expanding scaffold with cells having a cell size configured to increase penetration of the remaining thrombus material into the cells to facilitate capture of the remaining thrombus material.

76. The thrombus management method of Claim 75, further comprising engaging any remaining thrombus material and removing the remaining thrombus material with the second expandable tip assembly.

77. A thrombus management method for addressing an occlusive thrombus within a blood vessel, the method comprising:

identifying an occluded blood vessel having an occlusive thrombus;

selecting an expandable tip assembly based, at least in part, on a diameter of the identified occluded blood vessel, the expandable tip assembly comprising a proximal elongate member and a distal self-expanding scaffold;

inserting the selected expandable tip assembly within the occluded vessel through a microcatheter such that the self-expanding scaffold is positioned at a location of the thrombus in a non-expanded configuration;

retracting the microcatheter, thereby causing the scaffold to expand to an expanded configuration;

wherein said expansion compresses the thrombus against a wall of the blood vessel;

wherein said compression of the thrombus restores blood flow within the blood vessel;

wherein said restored blood flow facilitates natural lysis of the thrombus; and

macerating the thrombus by resheathing the self-expanding scaffold and unsheathing the self-expanding scaffold within the microcatheter, thereby facilitating mechanical lysis and fragmentation of the thrombus.

78. The thrombus management method of Claim 77, further comprising engaging the remaining thrombus material and removing the remaining thrombus material with the expandable tip assembly.

79. The thrombus management method of Claim 77, further comprising removing the expandable tip assembly and inserting a second expandable tip assembly into the microcatheter, the second expandable tip assembly having a self-expanding scaffold with cells having a cell size configured to increase protrusion of the remaining thrombus material within the cells to facilitate capture of the remaining thrombus material.

80. The thrombus management method of Claim 79, further comprising removing the remaining thrombus material with the second expandable tip assembly.

81. The thrombus management method of any one of Claims 77 through 80, wherein the blood vessel comprises a cerebral artery, and wherein the proximal elongate member comprises a flexible, distal portion configured to navigate curved portions of cerebral vasculature during delivery to the cerebral artery.

82. The thrombus management method of Claim 77, wherein blood flow is restored in less than two minutes from deployment of the self-expanding scaffold within the thrombus.

83. A thrombus management method for addressing an occlusive thrombus within a blood vessel by providing multiple layer embolus removal, comprising:

identifying an embolus within a cerebral artery;

inserting an expandable reperfusion device within the cerebral artery to the location of the embolus;

expanding the reperfusion device within the embolus, thereby establishing one or more blood flow channels through the embolus,

wherein the one or more blood flow channels facilitate natural lysis of the embolus to remove one or more outer layers of the embolus;

removing the reperfusion device;

inserting an expandable embolus removal device within the cerebral artery to the location of the embolus;

expanding the embolus removal device within a remaining portion of the embolus, thereby engaging the remaining portion of the embolus;

extracting the remaining portion of the embolus with the embolus removal device from the cerebral artery; and

removing the embolus removal device.

84. The method of Claim 83, wherein the reperfusion device comprises an expandable tip assembly including a proximal elongate member and a distal self-expanding scaffold.

85. The method of Claim 84, wherein said scaffold comprises open cells having a cell size that is configured to decrease penetration of the embolus within the scaffold, thereby increasing blood flow through the scaffold.

86. The method of Claim 83, wherein the embolus removal device comprises an expandable tip assembly including a proximal elongate member and a distal self-expanding scaffold.

87. The method of Claim 86, wherein said scaffold comprises open cells having a cell size that is configured to increase protrusion of the remaining portion of the embolus within the scaffold to facilitate capture of the remaining portion of the embolus.

88. The method of Claim 84, wherein inserting an expandable reperfusion device within the cerebral artery to the location of the embolus comprises inserting the expandable reperfusion device through a microcatheter such that the self-expanding scaffold is in a non-expanded configuration.

89. The method of Claim 84, wherein expanding the reperfusion device within the embolus comprises retracting the microcatheter, thereby allowing the self-expanding scaffold to deploy to an expanded configuration.

90. The method of Claim 83, wherein the one or more outer layers of the embolus comprise platelets and red blood cells.

91. The method of Claim 83, wherein the remaining portion of the embolus comprises a firm fibrin core of the embolus.

92. A thrombus management method for addressing an occlusive thrombus within a blood vessel by providing multiple layer embolus removal from a cerebral artery, comprising:

identifying an embolus within a cerebral artery;

wherein the embolus comprises an outer layer and an inner core;

establishing one or more blood flow channels through the embolus to restore blood flow;

disturbing the embolus by mechanical maceration of the embolus to release embolic particles from the outer layer of the embolus, thereby allowing the embolic particles to freely flow in the direction of the blood flow without capturing said embolic particles;

wherein said restored blood flow causes lysis of the embolic particles; and

extracting the inner core of the embolus.

93. The method of Claim 92, wherein said restored blood flow causes further release of embolic particles from the outer layer of the embolus.

94. The method of Claim 92, wherein the outer layer of the embolus comprises a softer portion of the embolus than the inner core of the embolus.

95. The method of Claim 92, wherein the outer layer comprises platelets and red blood cells.

96. The method of Claim 92, wherein the inner core of the embolus comprises a fibrin core that has a hardness that exceeds the hardness of the outer layer of the embolus.

97. The method of any one of Claims 92 through 96, wherein establishing one or more blood flow channels through the embolus to facilitate natural lysis of the embolus comprises expanding an expandable reperfusion device within the embolus.

98. The method of Claim 97, further comprising macerating the embolus with the expandable reperfusion device.

99. The method of any one of Claims 92 through 96, wherein extracting a remaining portion of the embolus comprises expanding an expandable embolus removal device within the embolus to engage and capture the inner core of the embolus.

100. The expandable tip assembly of any one of Claims 1 through 8 or Claim 33, wherein the expandable tip assembly comprises a reperfusion device and wherein the cells of the scaffold have a cell size adapted to inhibit protrusion of portions of the thrombus within an interior of the scaffold.

101. The expandable tip assembly of any one of Claims 1 through 8 or Claim 33, wherein the expandable tip assembly comprises a thrombus removal device, and wherein the cells of the scaffold have a cell size adapted to promote protrusion of portions of the thrombus within an interior of the scaffold.

102. A method of using an expandable tip assembly as in Claim 100 or Claim 101 to address an occlusive thrombus within a blood vessel.

103. A method of using an expandable tip assembly as in Claim 100 to reperfuse an occluded blood vessel having an occlusive thrombus.

104. A method of using an expandable tip assembly as in Claim 101 to extract thrombus material from an occluded blood vessel.

UNITED STATES PATENT AND TRADEMARK OFFICE

UNITED STATES DEPARTMENT OF COMMERCE
United States Patent and Trademark Office
Address: COMMISSIONER FOR PATENTS
P.O. Box 1450
Alexandria, Virginia 22313-1450
www.uspto.gov

| APPLICATION NO. | FILING DATE | FIRST NAMED INVENTOR | ATTORNEY DOCKET NO. | CONFIRMATION NO. |
|---|---|---|---|---|
| 12/980,039 | 12/28/2010 | David A. Ferrera | MDFR.001P1P1 | 4068 |

20995 7590 04/28/2011
KNOBBE MARTENS OLSON & BEAR LLP
2040 MAIN STREET
FOURTEENTH FLOOR
IRVINE, CA 92614

| EXAMINER |
|---|

| ART UNIT | PAPER NUMBER |
|---|---|
| 3734 | |

| NOTIFICATION DATE | DELIVERY MODE |
|---|---|
| 04/28/2011 | ELECTRONIC |

**Please find below and/or attached an Office communication concerning this application or proceeding.**

The time period for reply, if any, is set in the attached communication.

Notice of the Office communication was sent electronically on above-indicated "Notification Date" to the following e-mail address(es):

jcartee@kmob.com
efiling@kmob.com
eOAPilot@kmob.com

UNITED STATES PATENT AND TRADEMARK OFFICE

Commissioner for Patents
United States Patent and Trademark Office
P.O. Box 1450
Alexandria, VA 22313-1450
www.uspto.gov

KNOBBE MARTENS OLSON & BEAR LLP
2040 MAIN STREET
FOURTEENTH FLOOR
IRVINE CA 92614

| | | |
|---|---|---|
| In re Application of | : | |
| FERRERA, DAVID A. et al | : | DECISION ON REQUEST TO |
| Application No. 12/980,039 | : | PARTICIPATE IN PATENT |
| Filed: Oct. 28, 2010 | : | PCT/PROSECUTION HIGHWAY |
| Attorney Docket No. MDFR.001P1P1 | : | PROGRAM AND PETITION |
| For: BLOOD FLOW RESTORATION AND | : | TO MAKE SPECIAL |
| THROMBUS MANAGEMENT METHODS | : | 37 CFR 1.102(a) |

This is a decision on the renewed request to participate in the Patent Prosecution Highway (PPH) program and the petition under 37 CFR 1.102(a), filed April 26, 2011 to make the above-identified application special.

The request and petition are granted.

A grantable request to participate in the PPH program and petition to make special require:
(1) The U.S. application must disclose an eligible relationship to one or more PCT applications filed in the JPO, EPO, KIPO or USPTO;
(2) Applicant must submit a copy of the allowable/patentable claim(s) from the PCT application(s) latest international work product (the written opinion or the IPER) along with an English translation thereof and a statement that the English translation is accurate;
(3) All the claims in the U.S. application must sufficiently correspond or be amended to sufficiently correspond to the allowable/patentable claim(s) in the PCT application(s);
(4) Examination of the U.S. application has not begun;
(5) Applicant must submit a copy of the latest international work product from the PCT application containing the allowable/patentable claim(s) along with an English translation thereof and a statement that the English translation is accurate; and
(6) Applicant must submit an IDS listing the documents cited by the PCT examiner in the international work product along with copies of documents except U.S. patents or U.S. patent application publications.

In light of the petition being properly submitted, the request to participate in the PPH program and the petition comply with the above requirements. Accordingly, the above-identified application has been accorded "special" status.

The applicant is encouraged to cite and submit all relevant prior art references, if any, to facilitate examination in this application.

Other inquiries concerning the examination or status of the application should be directed to Gary Jackson, the SPE of Art Unit 3734 at 571-272-4697 for Class 623/001 and also accessible in the PAIR system at http://www.uspto.gov/ebc.index.html.

All other inquiries concerning the examination or status of the application should be directed to the Patent Application Information Retrieval (PAIR) system.

This application will be forwarded and docketed to an examiner for action on the merits commensurate with this decision.

Telephone inquiries concerning this decision should be directed to Henry C. Yuen, at 571-272-4856.

The petition is **granted.**

/Henry C. Yuen/

Henry C. Yuen, Special Programs Examiner
Technology Center 3700 – Mechanical Engineering,
Manufacturing and Products
571-272-4856

UNITED STATES PATENT AND TRADEMARK OFFICE

Commissioner for Patents
United States Patent and Trademark Office
P.O. Box 1450
Alexandria, VA 22313-1450
www.uspto.gov

In re Application of
Paul Henny

Application No. 12980046

Filed: December 28,2010

Attorney Docket No. PHO12580

:DECISION ON PETITION TO MAKE SPECIAL
:UNDER 37 CFR 1.102(c)(1)

This is a decision on the electronic petition under 37 CFR 1.102 (c)(1), filed 12-JAN-2011 to make the above-identified application special based on applicant's age as set forth in MPEP § 708.02, Section IV.

The petition is **GRANTED**.

A grantable petition to make an application special under 37 CFR 1.102(c)(1), MPEP § 708.02, Section IV: Applicant's Age must include a statement by applicant or a registered practitioner having evidence that applicant is at least 65 years of age. No fee is required.

Accordingly, the above-identified application has been accorded "special" status and will be taken up for action by the examiner upon the completion of all pre-examination processing.

Telephone inquiries concerning this electronic decision should be directed to the Electronic Business Center at 866-217-9197.

All other inquiries concerning either the examination or status of the application should be directed to the Technology Center.

UNITED STATES PATENT AND TRADEMARK OFFICE

UNITED STATES DEPARTMENT OF COMMERCE
United States Patent and Trademark Office
Address: COMMISSIONER FOR PATENTS
P.O. Box 1450
Alexandria, Virginia 22313-1450
www.uspto.gov

| APPLICATION NO. | FILING DATE | FIRST NAMED INVENTOR | ATTORNEY DOCKET NO. | CONFIRMATION NO. |
|---|---|---|---|---|
| 12/980,055 | 12/28/2010 | Je-Chang JEONG | Q111352 | 4100 |

23373 7590 01/25/2011
SUGHRUE MION, PLLC
2100 PENNSYLVANIA AVENUE, N.W.
SUITE 800
WASHINGTON, DC 20037

| EXAMINER |
|---|
| — |

| ART UNIT | PAPER NUMBER |
|---|---|
| 2482 | |

| NOTIFICATION DATE | DELIVERY MODE |
|---|---|
| 01/25/2011 | ELECTRONIC |

**Please find below and/or attached an Office communication concerning this application or proceeding.**

The time period for reply, if any, is set in the attached communication.

Notice of the Office communication was sent electronically on above-indicated "Notification Date" to the following e-mail address(es):

sughrue@sughrue.com
PPROCESSING@SUGHRUE.COM
USPTO@SUGHRUE.COM

UNITED STATES PATENT AND TRADEMARK OFFICE

Commissioner for Patents
United States Patent and Trademark Office
P.O. Box 1450
Alexandria, VA 22313-1450
okwww.uspto.gov

MAILED

JAN 24 2011

DIRECTOR OFFICE
TECHNOLOGY CENTER 2400

S. Stuart Lee
SUGHRUE MION, PLLC
2100 PENNSYLVANIA AVENUE, N.W.
SUITE 800
WASHINGTON DC 20037

| | | |
|---|---|---|
| In re Application of: JEONG, JE-CHANG, et. al.<br>Serial No.: **12/980,055**<br>Filed: December 28, 2010<br>Atty Docket No: Q111352<br>Title: SIGNAL COMPRESSING SYSTEM | ::<br>::<br>:<br>:: | DECISION ON PETITION TO MAKE SPECIAL FOR NEW APPLICATION UNDER 37 C.F.R. § 1.102 & M.P.E.P. § 708.02 |

This is a decision on the petition filed on December 28, 2010 to make the above-identified application special for accelerated examination procedure under 37 C.F.R. § 1.102(d).

The petition to make the application special is **GRANTED**.

The application is eligible for accelerated examination and the renewed petition complies with the conditions for granting the application special status pursuant to the "Change to Practice for Petitions in Patent Applications to Make Special and for Accelerated Examination" published June 26, 2006, in the Federal Register. (71 Fed. Reg. 36323).

The prosecution of the instant application will be conducted expeditiously according to the following guidelines.

1. The application will be docketed to an examiner and taken up for action within two weeks of the date of this decision.

2. Restriction Practice:
   If the examiner determines that the claims are not directed to a single invention, a telephone request to elect one single invention will be made pursuant to MPEP 812.01. As a prerequisite to the grant of this petition, the applicant has agreed to make an oral election, by telephone, without traverse. If the applicant refuses to make an election without traverse, or the examiner cannot reach the applicant after a reasonable effort, the examiner will treat the first claimed invention (invention defined by claim 1) as having being constructively elected without traverse for examination.

3. Office action:
If it is determined that, after appropriate consultation, there is a potential rejection or any other issue to be addressed, the examiner will telephone the applicant and arrange an interview to discuss and resolve the issue. An Office action, other than a Notice of Allowance and Fee(s) Due (Notice of Allowance), will not be issued unless either: 1) an interview was conducted but did not result in agreed to action that places the application in condition for allowance, or, 2) a determination is made that an interview would be unlikely to result in the application being placed in condition for allowance, and 3) an internal conference has been held to review any rejection of any claim.

4. Time for Reply:
An Office action other than a Notice of Allowance or a final Office action will set a shortened statutory period of one month or thirty days, whichever is longer, for reply with no extension of time available under 37 CFR 1.136(a). Failure to timely file a reply within this non-extendible period for reply will result in the abandonment of the application.

5. Reply by Applicant:
A timely reply to an Office action other than the Notice of Allowance must be submitted electronically via EFS or EFS-web and limited to addressing the rejections, objections and requirement made. Any amendment that attempts to: 1) add claims which would result in more than three pending independent claims or more than twenty pending total claims; 2) present claims not encompassed by the pre-examination search or an updated accelerated examination support document; or 3) present claims that are directed a non-elected invention or an invention other than that previously claimed and examined in the application, will be treated as not fully responsive and will not be entered.

For any amendment to the claims (including any new claim) that is not encompassed by the accelerated examination support document, applicant must provide an updated accelerated examination support document that encompasses the amended or new claims at the time of filing of the amendment.

To proceed expeditiously with the examination, it is recommended that a reply with amendments made to any claim or with any new claim being added be accompanied by an updated accelerated examination support document or a statement explaining how the amended or new claim is supported by the original accelerated examination support document.

6. Information Disclosure Statement (IDS):
Any IDS filed during prosecution must be submitted electronically via EFS or EFS-web, accompanied by an updated accelerated examination support document, and be in compliance with 37 CFR 1.97 and 1.98.

7. Post-Allowance Processing:

To expedite processing of the allowed application into a patent, the applicant must: 1) pay the required fees within one month of the date of the Notice of Allowance, and 2) not file any post allowance papers not required by the Office. In no event may the issue fee be paid and accepted later than three months from the date of the Notice of Allowance.

8. After-Final and Appeal Procedures:
To expedite prosecution, after receiving the final Office action, applicant must: 1) promptly file a notice of appeal, an appeal brief and appeal fees; and 2) not request a pre-appeal brief conference. Any amendment, affidavit or other evidence filed after final Office action must comply with applicable rules and the requirements outlined in numbered paragraphs 5 and 6 above. On appeal, the application will proceed according to normal appeal procedures. After appeal, the application will again be treated special.

9. Proceedings Outside the Normal Examination Process:
If the application becomes involved in a proceeding that is outside the normal examination process (e.g., a secrecy order, national security review, interference proceeding, petitions under 37 CFR 1.181, 182 or 183), the application will be treated special before and after such proceeding.

10. Final Disposition:
The twelve month goal of this accelerated examination procedure ends with a final disposition. The mailing of a final Office action, a Notice of Allowance, the filing of a Notice of Appeal, or the filing of a Request for Continued Examination (RCE) is the final disposition. If, during prosecution, a paper is not filed electronically using EFS-web, a reply is filed but is not fully responsive, the application is involved in an appeal, or a proceeding outside normal examination process, the application will still be examined expeditiously, however, the final disposition may occur more than twelve months from the filing of the application.

Any inquiry regarding this decision should be directed to Beatriz Prieto, Quality Assurance Specialist, at (571) 272-3902. A second point of Contact is Kim Huynh at (571)-272-4147.

/Beatriz Prieto/

Beatriz Prieto, Quality Assurance Specialist
Technology Center 2400
**Networking, Multiplexing, Cable and Security**

UNITED STATES PATENT AND TRADEMARK OFFICE

UNITED STATES DEPARTMENT OF COMMERCE
United States Patent and Trademark Office
Address: COMMISSIONER FOR PATENTS
P.O. Box 1450
Alexandria, Virginia 22313-1450
www.uspto.gov

| APPLICATION NO. | FILING DATE | FIRST NAMED INVENTOR | ATTORNEY DOCKET NO. | CONFIRMATION NO. |
|---|---|---|---|---|
| 12/980,070 | 12/28/2010 | Je-Chang JEONG | Q111719 | 4125 |

23373 7590 01/25/2011
SUGHRUE MION, PLLC
2100 PENNSYLVANIA AVENUE, N.W.
SUITE 800
WASHINGTON, DC 20037

| EXAMINER |
|---|

| ART UNIT | PAPER NUMBER |
|---|---|
| 2482 | |

| NOTIFICATION DATE | DELIVERY MODE |
|---|---|
| 01/25/2011 | ELECTRONIC |

**Please find below and/or attached an Office communication concerning this application or proceeding.**

The time period for reply, if any, is set in the attached communication.

Notice of the Office communication was sent electronically on above-indicated "Notification Date" to the following e-mail address(es):

sughrue@sughrue.com
PPROCESSING@SUGHRUE.COM
USPTO@SUGHRUE.COM

UNITED STATES PATENT AND TRADEMARK OFFICE

Commissioner for Patents
United States Patent and Trademark Office
P.O. Box 1450
Alexandria, VA 22313-1450
okwww.uspto.gov

S. Stuart Lee
SUGHRUE MION, PLLC
2100 PENNSYLVANIA AVENUE, N.W.
SUITE 800
WASHINGTON DC 20037

MAILED

JAN 24 2011

DIRECTOR OFFICE
TECHNOLOGY CENTER 2400

In re Application of: JEONG, JE-CHANG, et. al.
Serial No.: **12/980,070**
Filed: December 28, 2010
Atty Docket No: Q111719
Title: SIGNAL COMPRESSING SYSTEM

DECISION ON PETITION TO MAKE SPECIAL FOR NEW APPLICATION UNDER 37 C.F.R. § 1.102 & M.P.E.P. § 708.02

This is a decision on the petition filed on December 28, 2010 to make the above-identified application special for accelerated examination procedure under 37 C.F.R. § 1.102(d).

The petition to make the application special is **GRANTED.**

The application is eligible for accelerated examination and the renewed petition complies with the conditions for granting the application special status pursuant to the "Change to Practice for Petitions in Patent Applications to Make Special and for Accelerated Examination" published June 26, 2006, in the Federal Register. (71 Fed. Reg. 36323).

The prosecution of the instant application will be conducted expeditiously according to the following guidelines.

1. The application will be docketed to an examiner and taken up for action within two weeks of the date of this decision.

2. Restriction Practice:
If the examiner determines that the claims are not directed to a single invention, a telephone request to elect one single invention will be made pursuant to MPEP 812.01. As a prerequisite to the grant of this petition, the applicant has agreed to make an oral election, by telephone, without traverse. If the applicant refuses to make an election without traverse, or the examiner cannot reach the applicant after a reasonable effort, the examiner will treat the first claimed invention (invention defined by claim 1) as having being constructively elected without traverse for examination.

3. Office action:
If it is determined that, after appropriate consultation, there is a potential rejection or any other issue to be addressed, the examiner will telephone the applicant and arrange an interview to discuss and resolve the issue. An Office action, other than a Notice of Allowance and Fee(s) Due (Notice of Allowance), will not be issued unless either: 1) an interview was conducted but did not result in agreed to action that places the application in condition for allowance, or, 2) a determination is made that an interview would be unlikely to result in the application being placed in condition for allowance, and 3) an internal conference has been held to review any rejection of any claim.

4. Time for Reply:
An Office action other than a Notice of Allowance or a final Office action will set a shortened statutory period of one month or thirty days, whichever is longer, for reply with no extension of time available under 37 CFR 1.136(a). Failure to timely file a reply within this non-extendible period for reply will result in the abandonment of the application.

5. Reply by Applicant:
A timely reply to an Office action other than the Notice of Allowance must be submitted electronically via EFS or EFS-web and limited to addressing the rejections, objections and requirement made. Any amendment that attempts to: 1) add claims which would result in more than three pending independent claims or more than twenty pending total claims; 2) present claims not encompassed by the pre-examination search or an updated accelerated examination support document; or 3) present claims that are directed a non-elected invention or an invention other than that previously claimed and examined in the application, will be treated as not fully responsive and will not be entered.

For any amendment to the claims (including any new claim) that is not encompassed by the accelerated examination support document, applicant must provide an updated accelerated examination support document that encompasses the amended or new claims at the time of filing of the amendment.

To proceed expeditiously with the examination, it is recommended that a reply with amendments made to any claim or with any new claim being added be accompanied by an updated accelerated examination support document or a statement explaining how the amended or new claim is supported by the original accelerated examination support document.

6. Information Disclosure Statement (IDS):
Any IDS filed during prosecution must be submitted electronically via EFS or EFS-web, accompanied by an updated accelerated examination support document, and be in compliance with 37 CFR 1.97 and 1.98.

7. Post-Allowance Processing:

To expedite processing of the allowed application into a patent, the applicant must: 1) pay the required fees within one month of the date of the Notice of Allowance, and 2) not file any post allowance papers not required by the Office. In no event may the issue fee be paid and accepted later than three months from the date of the Notice of Allowance.

8. After-Final and Appeal Procedures:
To expedite prosecution, after receiving the final Office action, applicant must: 1) promptly file a notice of appeal, an appeal brief and appeal fees; and 2) not request a pre-appeal brief conference. Any amendment, affidavit or other evidence filed after final Office action must comply with applicable rules and the requirements outlined in numbered paragraphs 5 and 6 above. On appeal, the application will proceed according to normal appeal procedures. After appeal, the application will again be treated special.

9. Proceedings Outside the Normal Examination Process:
If the application becomes involved in a proceeding that is outside the normal examination process (e.g., a secrecy order, national security review, interference proceeding, petitions under 37 CFR 1.181, 182 or 183), the application will be treated special before and after such proceeding.

10. Final Disposition:
The twelve month goal of this accelerated examination procedure ends with a final disposition. The mailing of a final Office action, a Notice of Allowance, the filing of a Notice of Appeal, or the filing of a Request for Continued Examination (RCE) is the final disposition. If, during prosecution, a paper is not filed electronically using EFS-web, a reply is filed but is not fully responsive, the application is involved in an appeal, or a proceeding outside normal examination process, the application will still be examined expeditiously, however, the final disposition may occur more than twelve months from the filing of the application.

Any inquiry regarding this decision should be directed to Beatriz Prieto, Quality Assurance Specialist, at (571) 272-3902. A second point of Contact is Kim Huynh at (571)-272-4147.

/Beatriz Prieto/

Beatriz Prieto, Quality Assurance Specialist
Technology Center 2400
**Networking, Multiplexing, Cable and Security**

UNITED STATES PATENT AND TRADEMARK OFFICE

UNITED STATES DEPARTMENT OF COMMERCE
United States Patent and Trademark Office
Address: COMMISSIONER FOR PATENTS
P.O. Box 1450
Alexandria, Virginia 22313-1450
www.uspto.gov

| APPLICATION NO. | FILING DATE | FIRST NAMED INVENTOR | ATTORNEY DOCKET NO. | CONFIRMATION NO. |
|---|---|---|---|---|
| 12/980,089 | 12/28/2010 | Je-Chang JEONG | Q111720 | 4151 |

23373 7590 01/25/2011
SUGHRUE MION, PLLC
2100 PENNSYLVANIA AVENUE, N.W.
SUITE 800
WASHINGTON, DC 20037

| EXAMINER |
|---|

| ART UNIT | PAPER NUMBER |
|---|---|
| 2482 | |

| NOTIFICATION DATE | DELIVERY MODE |
|---|---|
| 01/25/2011 | ELECTRONIC |

**Please find below and/or attached an Office communication concerning this application or proceeding.**

The time period for reply, if any, is set in the attached communication.

Notice of the Office communication was sent electronically on above-indicated "Notification Date" to the following e-mail address(es):

sughrue@sughrue.com
PPROCESSING@SUGHRUE.COM
USPTO@SUGHRUE.COM

UNITED STATES PATENT AND TRADEMARK OFFICE

Commissioner for Patents
United States Patent and Trademark Office
P.O. Box 1450
Alexandria, VA 22313-1450
okwww.uspto.gov

S. Stuart Lee
SUGHRUE MION, PLLC
2100 PENNSYLVANIA AVENUE, N.W.
SUITE 800
WASHINGTON DC 20037

JAN 24 2011
DIRECTOR OFFICE
TECHNOLOGY CENTER 2400

In re Application of: JEONG, JE-CHANG, et. al.
Serial No.: **12/980,089**
Filed: December 28, 2010
Atty Docket No: Q111720
Title: SIGNAL COMPRESSING SYSTEM

DECISION ON PETITION TO MAKE SPECIAL FOR NEW APPLICATION UNDER 37 C.F.R. § 1.102 & M.P.E.P. § 708.02

This is a decision on the petition filed on December 28, 2010 to make the above-identified application special for accelerated examination procedure under 37 C.F.R. § 1.102(d).

The petition to make the application special is **GRANTED**.

The application is eligible for accelerated examination and the renewed petition complies with the conditions for granting the application special status pursuant to the "Change to Practice for Petitions in Patent Applications to Make Special and for Accelerated Examination" published June 26, 2006, in the Federal Register. (71 Fed. Reg. 36323).

The prosecution of the instant application will be conducted expeditiously according to the following guidelines.

1. The application will be docketed to an examiner and taken up for action within two weeks of the date of this decision.

2. Restriction Practice:
If the examiner determines that the claims are not directed to a single invention, a telephone request to elect one single invention will be made pursuant to MPEP 812.01. As a prerequisite to the grant of this petition, the applicant has agreed to make an oral election, by telephone, without traverse. If the applicant refuses to make an election without traverse, or the examiner cannot reach the applicant after a reasonable effort, the examiner will treat the first claimed invention (invention defined by claim 1) as having being constructively elected without traverse for examination.

3. Office action:
If it is determined that, after appropriate consultation, there is a potential rejection or any other issue to be addressed, the examiner will telephone the applicant and arrange an interview to discuss and resolve the issue. An Office action, other than a Notice of Allowance and Fee(s) Due (Notice of Allowance), will not be issued unless either: 1) an interview was conducted but did not result in agreed to action that places the application in condition for allowance, or, 2) a determination is made that an interview would be unlikely to result in the application being placed in condition for allowance, and 3) an internal conference has been held to review any rejection of any claim.

4. Time for Reply:
An Office action other than a Notice of Allowance or a final Office action will set a shortened statutory period of one month or thirty days, whichever is longer, for reply with no extension of time available under 37 CFR 1.136(a). Failure to timely file a reply within this non-extendible period for reply will result in the abandonment of the application.

5. Reply by Applicant:
A timely reply to an Office action other than the Notice of Allowance must be submitted electronically via EFS or EFS-web and limited to addressing the rejections, objections and requirement made. Any amendment that attempts to: 1) add claims which would result in more than three pending independent claims or more than twenty pending total claims; 2) present claims not encompassed by the pre-examination search or an updated accelerated examination support document; or 3) present claims that are directed a non-elected invention or an invention other than that previously claimed and examined in the application, will be treated as not fully responsive and will not be entered.

For any amendment to the claims (including any new claim) that is not encompassed by the accelerated examination support document, applicant must provide an updated accelerated examination support document that encompasses the amended or new claims at the time of filing of the amendment.

To proceed expeditiously with the examination, it is recommended that a reply with amendments made to any claim or with any new claim being added be accompanied by an updated accelerated examination support document or a statement explaining how the amended or new claim is supported by the original accelerated examination support document.

6. Information Disclosure Statement (IDS):
Any IDS filed during prosecution must be submitted electronically via EFS or EFS-web, accompanied by an updated accelerated examination support document, and be in compliance with 37 CFR 1.97 and 1.98.

7. Post-Allowance Processing:

To expedite processing of the allowed application into a patent, the applicant must: 1) pay the required fees within one month of the date of the Notice of Allowance, and 2) not file any post allowance papers not required by the Office. In no event may the issue fee be paid and accepted later than three months from the date of the Notice of Allowance.

8. After-Final and Appeal Procedures:
To expedite prosecution, after receiving the final Office action, applicant must: 1) promptly file a notice of appeal, an appeal brief and appeal fees; and 2) not request a pre-appeal brief conference. Any amendment, affidavit or other evidence filed after final Office action must comply with applicable rules and the requirements outlined in numbered paragraphs 5 and 6 above. On appeal, the application will proceed according to normal appeal procedures. After appeal, the application will again be treated special.

9. Proceedings Outside the Normal Examination Process:
If the application becomes involved in a proceeding that is outside the normal examination process (e.g., a secrecy order, national security review, interference proceeding, petitions under 37 CFR 1.181, 182 or 183), the application will be treated special before and after such proceeding.

10. Final Disposition:
The twelve month goal of this accelerated examination procedure ends with a final disposition. The mailing of a final Office action, a Notice of Allowance, the filing of a Notice of Appeal, or the filing of a Request for Continued Examination (RCE) is the final disposition. If, during prosecution, a paper is not filed electronically using EFS-web, a reply is filed but is not fully responsive, the application is involved in an appeal, or a proceeding outside normal examination process, the application will still be examined expeditiously, however, the final disposition may occur more than twelve months from the filing of the application.

Any inquiry regarding this decision should be directed to Beatriz Prieto, Quality Assurance Specialist, at (571) 272-3902. A second point of Contact is Kim Huynh at (571)-272-4147.

/Beatriz Prieto/

Beatriz Prieto, Quality Assurance Specialist
Technology Center 2400
**Networking, Multiplexing, Cable and Security**

UNITED STATES PATENT AND TRADEMARK OFFICE

UNITED STATES DEPARTMENT OF COMMERCE
United States Patent and Trademark Office
Address: COMMISSIONER FOR PATENTS
P.O. Box 1450
Alexandria, Virginia 22313-1450
www.uspto.gov

| APPLICATION NO. | FILING DATE | FIRST NAMED INVENTOR | ATTORNEY DOCKET NO. | CONFIRMATION NO. |
|---|---|---|---|---|
| 12/980,109 | 12/28/2010 | Je-Chang JEONG | Q111721 | 4177 |

23373 7590 01/25/2011
SUGHRUE MION, PLLC
2100 PENNSYLVANIA AVENUE, N.W.
SUITE 800
WASHINGTON, DC 20037

| EXAMINER |
|---|

| ART UNIT | PAPER NUMBER |
|---|---|
| 2482 | |

| NOTIFICATION DATE | DELIVERY MODE |
|---|---|
| 01/25/2011 | ELECTRONIC |

**Please find below and/or attached an Office communication concerning this application or proceeding.**

The time period for reply, if any, is set in the attached communication.

Notice of the Office communication was sent electronically on above-indicated "Notification Date" to the following e-mail address(es):

sughrue@sughrue.com
PPROCESSING@SUGHRUE.COM
USPTO@SUGHRUE.COM

UNITED STATES PATENT AND TRADEMARK OFFICE

Commissioner for Patents
United States Patent and Trademark Office
P.O. Box 1450
Alexandria, VA 22313-1450
okwww.uspto.gov

S. Stuart Lee
SUGHRUE MION, PLLC
2100 PENNSYLVANIA AVENUE, N.W.
SUITE 800
WASHINGTON DC 20037

MAILED

JAN 24 2011

DIRECTOR OFFICE
TECHNOLOGY CENTER 2400

In re Application of: JEONG, JE-CHANG, et. al.
Serial No.: **12/980,109**
Filed: December 28, 2010
Atty Docket No: Q111721
Title: SIGNAL COMPRESSING SYSTEM

DECISION ON PETITION TO MAKE SPECIAL FOR NEW APPLICATION UNDER 37 C.F.R. § 1.102 & M.P.E.P. § 708.02

This is a decision on the petition filed on December 28, 2010 to make the above-identified application special for accelerated examination procedure under 37 C.F.R. § 1.102(d).

The petition to make the application special is **GRANTED.**

The application is eligible for accelerated examination and the renewed petition complies with the conditions for granting the application special status pursuant to the "Change to Practice for Petitions in Patent Applications to Make Special and for Accelerated Examination" published June 26, 2006, in the Federal Register. (71 Fed. Reg. 36323).

The prosecution of the instant application will be conducted expeditiously according to the following guidelines.

1. The application will be docketed to an examiner and taken up for action within two weeks of the date of this decision.

2. Restriction Practice:
   If the examiner determines that the claims are not directed to a single invention, a telephone request to elect one single invention will be made pursuant to MPEP 812.01. As a prerequisite to the grant of this petition, the applicant has agreed to make an oral election, by telephone, without traverse. If the applicant refuses to make an election without traverse, or the examiner cannot reach the applicant after a reasonable effort, the examiner will treat the first claimed invention (invention defined by claim 1) as having being constructively elected without traverse for examination.

3. Office action:
If it is determined that, after appropriate consultation, there is a potential rejection or any other issue to be addressed, the examiner will telephone the applicant and arrange an interview to discuss and resolve the issue. An Office action, other than a Notice of Allowance and Fee(s) Due (Notice of Allowance), will not be issued unless either: 1) an interview was conducted but did not result in agreed to action that places the application in condition for allowance, or, 2) a determination is made that an interview would be unlikely to result in the application being placed in condition for allowance, and 3) an internal conference has been held to review any rejection of any claim.

4. Time for Reply:
An Office action other than a Notice of Allowance or a final Office action will set a shortened statutory period of one month or thirty days, whichever is longer, for reply with no extension of time available under 37 CFR 1.136(a). Failure to timely file a reply within this non-extendible period for reply will result in the abandonment of the application.

5. Reply by Applicant:
A timely reply to an Office action other than the Notice of Allowance must be submitted electronically via EFS or EFS-web and limited to addressing the rejections, objections and requirement made. Any amendment that attempts to: 1) add claims which would result in more than three pending independent claims or more than twenty pending total claims; 2) present claims not encompassed by the pre-examination search or an updated accelerated examination support document; or 3) present claims that are directed a non-elected invention or an invention other than that previously claimed and examined in the application, will be treated as not fully responsive and will not be entered.

For any amendment to the claims (including any new claim) that is not encompassed by the accelerated examination support document, applicant must provide an updated accelerated examination support document that encompasses the amended or new claims at the time of filing of the amendment.

To proceed expeditiously with the examination, it is recommended that a reply with amendments made to any claim or with any new claim being added be accompanied by an updated accelerated examination support document or a statement explaining how the amended or new claim is supported by the original accelerated examination support document.

6. Information Disclosure Statement (IDS):
Any IDS filed during prosecution must be submitted electronically via EFS or EFS-web, accompanied by an updated accelerated examination support document, and be in compliance with 37 CFR 1.97 and 1.98.

7. Post-Allowance Processing:

To expedite processing of the allowed application into a patent, the applicant must: 1) pay the required fees within one month of the date of the Notice of Allowance, and 2) not file any post allowance papers not required by the Office. In no event may the issue fee be paid and accepted later than three months from the date of the Notice of Allowance.

8. After-Final and Appeal Procedures:
To expedite prosecution, after receiving the final Office action, applicant must: 1) promptly file a notice of appeal, an appeal brief and appeal fees; and 2) not request a pre-appeal brief conference. Any amendment, affidavit or other evidence filed after final Office action must comply with applicable rules and the requirements outlined in numbered paragraphs 5 and 6 above. On appeal, the application will proceed according to normal appeal procedures. After appeal, the application will again be treated special.

9. Proceedings Outside the Normal Examination Process:
If the application becomes involved in a proceeding that is outside the normal examination process (e.g., a secrecy order, national security review, interference proceeding, petitions under 37 CFR 1.181, 182 or 183), the application will be treated special before and after such proceeding.

10. Final Disposition:
The twelve month goal of this accelerated examination procedure ends with a final disposition. The mailing of a final Office action, a Notice of Allowance, the filing of a Notice of Appeal, or the filing of a Request for Continued Examination (RCE) is the final disposition. If, during prosecution, a paper is not filed electronically using EFS-web, a reply is filed but is not fully responsive, the application is involved in an appeal, or a proceeding outside normal examination process, the application will still be examined expeditiously, however, the final disposition may occur more than twelve months from the filing of the application.

Any inquiry regarding this decision should be directed to Beatriz Prieto, Quality Assurance Specialist, at (571) 272-3902. A second point of Contact is Kim Huynh at (571)-272-4147.

/Beatriz Prieto/

Beatriz Prieto, Quality Assurance Specialist
Technology Center 2400
**Networking, Multiplexing, Cable and Security**

UNITED STATES PATENT AND TRADEMARK OFFICE

UNITED STATES DEPARTMENT OF COMMERCE
United States Patent and Trademark Office
Address: COMMISSIONER FOR PATENTS
P.O. Box 1450
Alexandria, Virginia 22313-1450
www.uspto.gov

| APPLICATION NO. | FILING DATE | FIRST NAMED INVENTOR | ATTORNEY DOCKET NO. | CONFIRMATION NO. |
|---|---|---|---|---|
| 12/980,123 | 12/28/2010 | Je-Chang JEONG | Q111722 | 4197 |

23373 7590 01/25/2011
SUGHRUE MION, PLLC
2100 PENNSYLVANIA AVENUE, N.W.
SUITE 800
WASHINGTON, DC 20037

| EXAMINER |
|---|

| ART UNIT | PAPER NUMBER |
|---|---|
| 2482 | |

| NOTIFICATION DATE | DELIVERY MODE |
|---|---|
| 01/25/2011 | ELECTRONIC |

**Please find below and/or attached an Office communication concerning this application or proceeding.**

The time period for reply, if any, is set in the attached communication.

Notice of the Office communication was sent electronically on above-indicated "Notification Date" to the following e-mail address(es):

sughrue@sughrue.com
PPROCESSING@SUGHRUE.COM
USPTO@SUGHRUE.COM

UNITED STATES PATENT AND TRADEMARK OFFICE

Commissioner for Patents
United States Patent and Trademark Office
P.O. Box 1450
Alexandria, VA 22313-1450
okwww.uspto.gov

MAILED

JAN 24 2011

DIRECTOR OFFICE
TECHNOLOGY CENTER 2400

S. Stuart Lee
SUGHRUE MION, PLLC
2100 PENNSYLVANIA AVENUE, N.W.
SUITE 800
WASHINGTON DC 20037

In re Application of: JEONG, JE-CHANG, et. al.
Serial No.: **12/980,123**
Filed: December 28, 2010
Atty Docket No: Q111722
Title: SIGNAL COMPRESSING SYSTEM

DECISION ON PETITION TO MAKE SPECIAL FOR NEW APPLICATION UNDER 37 C.F.R. § 1.102 & M.P.E.P. § 708.02

This is a decision on the petition filed on December 28, 2010 to make the above-identified application special for accelerated examination procedure under 37 C.F.R. § 1.102(d).

The petition to make the application special is **GRANTED.**

The application is eligible for accelerated examination and the renewed petition complies with the conditions for granting the application special status pursuant to the "Change to Practice for Petitions in Patent Applications to Make Special and for Accelerated Examination" published June 26, 2006, in the Federal Register. (71 Fed. Reg. 36323).

The prosecution of the instant application will be conducted expeditiously according to the following guidelines.

1. The application will be docketed to an examiner and taken up for action within two weeks of the date of this decision.

2. Restriction Practice:
If the examiner determines that the claims are not directed to a single invention, a telephone request to elect one single invention will be made pursuant to MPEP 812.01. As a prerequisite to the grant of this petition, the applicant has agreed to make an oral election, by telephone, without traverse. If the applicant refuses to make an election without traverse, or the examiner cannot reach the applicant after a reasonable effort, the examiner will treat the first claimed invention (invention defined by claim 1) as having being constructively elected without traverse for examination.

3. Office action:
If it is determined that, after appropriate consultation, there is a potential rejection or any other issue to be addressed, the examiner will telephone the applicant and arrange an interview to discuss and resolve the issue. An Office action, other than a Notice of Allowance and Fee(s) Due (Notice of Allowance), will not be issued unless either: 1) an interview was conducted but did not result in agreed to action that places the application in condition for allowance, or, 2) a determination is made that an interview would be unlikely to result in the application being placed in condition for allowance, and 3) an internal conference has been held to review any rejection of any claim.

4. Time for Reply:
An Office action other than a Notice of Allowance or a final Office action will set a shortened statutory period of one month or thirty days, whichever is longer, for reply with no extension of time available under 37 CFR 1.136(a). Failure to timely file a reply within this non-extendible period for reply will result in the abandonment of the application.

5. Reply by Applicant:
A timely reply to an Office action other than the Notice of Allowance must be submitted electronically via EFS or EFS-web and limited to addressing the rejections, objections and requirement made. Any amendment that attempts to: 1) add claims which would result in more than three pending independent claims or more than twenty pending total claims; 2) present claims not encompassed by the pre-examination search or an updated accelerated examination support document; or 3) present claims that are directed a non-elected invention or an invention other than that previously claimed and examined in the application, will be treated as not fully responsive and will not be entered.

For any amendment to the claims (including any new claim) that is not encompassed by the accelerated examination support document, applicant must provide an updated accelerated examination support document that encompasses the amended or new claims at the time of filing of the amendment.

To proceed expeditiously with the examination, it is recommended that a reply with amendments made to any claim or with any new claim being added be accompanied by an updated accelerated examination support document or a statement explaining how the amended or new claim is supported by the original accelerated examination support document.

6. Information Disclosure Statement (IDS):
Any IDS filed during prosecution must be submitted electronically via EFS or EFS-web, accompanied by an updated accelerated examination support document, and be in compliance with 37 CFR 1.97 and 1.98.

7. Post-Allowance Processing:

To expedite processing of the allowed application into a patent, the applicant must: 1) pay the required fees within one month of the date of the Notice of Allowance, and 2) not file any post allowance papers not required by the Office. In no event may the issue fee be paid and accepted later than three months from the date of the Notice of Allowance.

8. After-Final and Appeal Procedures:
To expedite prosecution, after receiving the final Office action, applicant must: 1) promptly file a notice of appeal, an appeal brief and appeal fees; and 2) not request a pre-appeal brief conference. Any amendment, affidavit or other evidence filed after final Office action must comply with applicable rules and the requirements outlined in numbered paragraphs 5 and 6 above. On appeal, the application will proceed according to normal appeal procedures. After appeal, the application will again be treated special.

9. Proceedings Outside the Normal Examination Process:
If the application becomes involved in a proceeding that is outside the normal examination process (e.g., a secrecy order, national security review, interference proceeding, petitions under 37 CFR 1.181, 182 or 183), the application will be treated special before and after such proceeding.

10. Final Disposition:
The twelve month goal of this accelerated examination procedure ends with a final disposition. The mailing of a final Office action, a Notice of Allowance, the filing of a Notice of Appeal, or the filing of a Request for Continued Examination (RCE) is the final disposition. If, during prosecution, a paper is not filed electronically using EFS-web, a reply is filed but is not fully responsive, the application is involved in an appeal, or a proceeding outside normal examination process, the application will still be examined expeditiously, however, the final disposition may occur more than twelve months from the filing of the application.

Any inquiry regarding this decision should be directed to Beatriz Prieto, Quality Assurance Specialist, at (571) 272-3902. A second point of Contact is Kim Huynh at (571)-272-4147.

/Beatriz Prieto/

Beatriz Prieto, Quality Assurance Specialist
Technology Center 2400
**Networking, Multiplexing, Cable and Security**

UNITED STATES PATENT AND TRADEMARK OFFICE

Commissioner for Patents
United States Patent and Trademark Office
P.O. Box 1450
Alexandria, VA 22313-1450
www.uspto.gov

**LUCAS & MERCANTI, LLP**
**475 PARK AVENUE SOUTH**
**15TH FLOOR**
**NEW YORK, NY 10016**

MAILED

JAN 24 2011

OFFICE OF PETITIONS

| | | |
|---|---|---|
| In re Application of | : | |
| Hans-Jurgen HANNIG | : | |
| Application No. 12/980,124 | : | DECISION ON PETITION |
| Filed: December 28, 2010 | : | TO MAKE SPECIAL UNDER |
| Attorney Docket No. LSP-6-B | : | 37 CFR 1.102(c)(1) |
| | : | |

This is a decision on the petition under 37 CFR 1.102(c)(1), filed December 28, 2010, to make the above-identified application special based on applicant's age as set forth in M.P.E.P. § 708.02, Section IV.

The petition is **GRANTED**.

A grantable petition to make an application special under 37 CFR 1.102(c)(1) and MPEP § 708.02, Section IV: Applicant's Age must be accompanied by evidence showing that at least one of the applicants is 65 years of age, or more, such as a birth certificate or a statement by applicant. No fee is required

The instant petition includes a statement made by registered attorney Donald C. Lucas, which will be treated as the result of the attorney having evidence that the applicant is at least 65 years of age. In the event that such evidence is not with the attorney, the Office should be notified immediately. Accordingly, the above-identified application has been accorded "special" status.

Telephone inquiries concerning this decision should be directed to undersigned at (571) 272-6735.

This application is being referred to the Office of Data Management for processing. This application will be accorded "special" status when pre-examination processing is done.

/Diane C. Goodwyn/
Diane C. Goodwyn
Petitions Examiner
Office of Petitions

UNITED STATES PATENT AND TRADEMARK OFFICE

UNITED STATES DEPARTMENT OF COMMERCE
United States Patent and Trademark Office
Address: COMMISSIONER FOR PATENTS
P.O. Box 1450
Alexandria, Virginia 22313-1450
www.uspto.gov

| APPLICATION NO. | FILING DATE | FIRST NAMED INVENTOR | ATTORNEY DOCKET NO. | CONFIRMATION NO. |
|---|---|---|---|---|
| 12/980,136 | 12/28/2010 | Yong Tae MOON | HI-0529 | 4220 |

34610· 7590 01/25/2011
KED & ASSOCIATES, LLP
P.O. Box 8638
Reston, VA 20195

| EXAMINER |
|---|

| ART UNIT | PAPER NUMBER |
|---|---|
| 2875 | |

| MAIL DATE | DELIVERY MODE |
|---|---|
| 01/25/2011 | PAPER |

**Please find below and/or attached an Office communication concerning this application or proceeding.**

The time period for reply, if any, is set in the attached communication.

UNITED STATES PATENT AND TRADEMARK OFFICE

Commissioner for Patents
United States Patent and Trademark Office
P.O. Box 1450
Alexandria, VA 22313-1450
www.uspto.gov

**KED & ASSOCIATES, LLP**
**P.O. Box 8638**
**Reston VA 20195**

| | |
|---|---|
| **In re Application of** | **: DECISION ON REQUEST TO** |
| **MOON et al** | **: PARTICIPATE IN THE PATENT** |
| **Application No.: 12/980,136** | **: PROSECUTION HIGHWAY** |
| **Filed: 28 December 2010** | **: PROGRAM AND PETITION** |
| **Attorney Docket No.: HI-0529** | **: TO MAKE SPECIAL UNDER** |
| **For: LIGHT EMITTING DEVICE** | **: 37 CFR 1.102(a)** |

This is a decision on the request to participate in the Patent Prosecution Highway (PPH) program and the petition under 37 CFR 1.102(a), filed 28 December 2010, to make the above-identified application special.

The request and petition are **GRANTED**.

**Discussion**

A grantable request to participate in the PPH program and petition to make special require:

1. The U.S. application is

    a. a Paris Convention application which either
        i. validly claims priority under 35 U.S.C. 119(a) and 37 CFR 1.55 to one or more applications filed in the KIPO, or
        ii. validly claims priority under 35 U.S.C. 119(a)/365(a) to a PCT application that contains no priority claims,

    or

    b. a national stage application under the PCT (an application which entered the national stage in the U.S. from a PCT international application after compliance with 35 U.S.C. 371), which PCT application
        i. validly claims priority under 35 U.S.C. 365(b) to an application filed in the KIPO, or
        ii. validly claims priority under 35 U.S.C. 365(b) to a PCT application that contains no priority claims, or
        iii. contains no priority claim,

    or

    c. a so-called bypass application filed under 35 U.S.C. 111(a) which validly claims benefit under 35 U.S.C. 120 to a PCT application, which PCT application

i. validly claims priority under 35 U.S.C. 365(b) to an application filed in the KIPO, or
ii. validly claims priority under 35 U.S.C. 365(b) to a PCT application that contains no priority claims, or
iii. contains no priority claim;

2. Applicant must submit a copy of:
   a. The allowable/patentable claim(s) from the KR application(s);
   b. An English translation of the allowable/patentable claim(s), and
   c. A statement that the English translation is accurate (if the claims were published in a language other than English);
3. Applicant must:
   a. Ensure that all the claims in the U.S. application must sufficiently correspond or be amended to sufficiently correspond to the allowable/patentable claim(s) in the KR application(s), and
   b. Submit a claims correspondence table in English;
4. Examination of the U.S. application has not begun;
5. Applicant must submit:
   a. A copy of all the office actions (which are relevant to patentability), excluding "Decision to Grant a Patent" from each of the KR application(s) containing the allowable/patentable claim(s);
   b. An English language translation of the KIPO office action; and
   c. A statement that the English translation is accurate (if the office actions are not in the English language);
6. Applicant must submit:
   a. An IDS listing the documents cited by the KIPO examiner in the KIPO office action (unless already filed in this application); and
   b. Copies of all the documents cited in the KIPO office action, except U.S. patents or U.S. patent application publications (unless already filed in this application);

The request to participate in the PPH program and petition comply with the above requirements. Accordingly, the above-identified application has been accorded "special" status.

Any response must be submitted via EFS-Web.

Telephone inquiries concerning this decision should be directed to Lee W. Young at 571-272-4549.

All other inquiries concerning the examination or status of the application is accessible in the PAIR system at http://uspto.gov/ebc/index.html.

Lee W. Young
TQAS
Technology Center 2800

UNITED STATES PATENT AND TRADEMARK OFFICE

Commissioner for Patents
United States Patent and Trademark Office
P.O. Box 1450

MAILED
JUN 01 2011
OFFICE OF PETITIONS

**STERNE, KESSLER, GOLDSTEIN & FOX P.L.L.C.**
**1100 NEW YORK AVENUE, N.W.**
**WASHINGTON DC 20005**

| | | |
|---|---|---|
| In re Application of | : | |
| Mark DALE et al. | : | ON PETITION |
| Application No. 12/980,137 | : | |
| Filed: December 28, 2010 | : | |
| Atty. Docket No.: 1875.3170002 | : | |

This is in response to the petition under 37 CFR 1.47(a), filed March 18, 2011.

The petition is **DISMISSED**.

Rule 47 applicant is given TWO (2) MONTHS from the mailing date of this decision to reply, correcting the below-noted deficiencies. Any reply should be entitled "Request for Reconsideration of Petition Under 37 CFR 1.47(a)," and should only address the deficiencies noted below, except that the reply may include an oath or declaration executed by the non-signing inventor. **FAILURE TO RESPOND WILL RESULT IN ABANDONMENT OF THE APPLICATION.** Any extensions of time will be governed by 37 CFR 1.136(a).

A grantable petition under 37 CFR 1.47(a) requires:

> (1) proof that the non-signing inventor cannot be reached or refuses to sign the oath or declaration after having been presented with the application papers (specification, claims, and drawings);
> (2) an acceptable oath or declaration in compliance with 35 U.S.C. §§115 and 116;
> (3) the petition fee; and
> (4) a statement of the last known address of the non-signing inventor.

The petition lacks item (1).

Item (1) requires that a "diligent effort" be expended in attempting to find or reach the non-signing inventor (35 U.S.C. § 116) (*see also,* MPEP 409.03(a)). The showing currently fails to demonstrate, with a documented showing, that a diligent effort was made to find or locate non-signing inventor Mark Dale. Notably, petitioner fails to show that application papers were mailed to the address of Mr. Dale, or that he was not

available via online searching. Additional evidence should include whether petitioner has access to the inventor's personnel record, and, if so, what does inspection of the record reveal as to a current address, forwarding address, or an address of the nearest living relative? What does inspection of the phone directories for those address locations reveal? If a forwarding address is provided, petitioner should then mail a complete copy of the application papers (specification, claims, drawings, oath, etc.) to the unsigning inventor's address, return receipts requested, along with a cover letter of instructions which includes a deadline. If the papers are returned and all other attempts to locate or reach the inventor, e.g., through personnel records, co-workers, E-mail, the Internet or the telephone, etc., continue to fail, then applicant will have established that the inventor cannot be reached after diligent effort. The statements of facts must be signed, where at all possible, by a person having firsthand knowledge of the facts recited therein and should be accompanied by documentary evidence in support of the statement of facts. It is important that the forthcoming communication contain statements of fact as opposed to conclusions.

Where there is an express or oral refusal, that fact, along with the time and place of the refusal, must be stated in an affidavit or declaration by the party to whom the refusal was made. Where there is a written refusal, a copy of the document evidencing that refusal must be made part of the affidavit or declaration.

When it is concluded by the rule 47 application that an omitted inventor's conduct constitutes a refusal, all facts upon which that a conclusion is based should be stated in an affidavit or declaration. If there is documentary evidence to support facts alleged in the affidavit or declaration, such evidence must be submitted.

Whenever an omitted inventor gives a reason for refusing to sign the application oath or declaration, that reason should be stated in the affidavit or declaration.

Further correspondence with respect to this matter should be addressed as follows:

By Mail: Mail Stop PETITION
Commissioner for Patents
P. O. Box 1450
Alexandria, VA 22313-1450

By hand: U. S. Patent and Trademark Office
Customer Service Window, Mail Stop Petitions
Randolph Building
401 Dulany Street
Alexandria, VA 22314

The centralized facsimile number is **(571) 273-8300.**

General inquiries relating to this decision should be directed to Robert DeWitty, Petitions Attorney, Office of Petitions (571-272-8427).

Ramesh Krishnamurthy

for David Bucci
Petitions Examiner
Office of Petitions

UNITED STATES PATENT AND TRADEMARK OFFICE

Commissioner for Patents
United States Patent and Trademark Office
P.O. Box 1450

MAILED
JUN 23 2011
OFFICE OF PETITIONS

**STERNE, KESSLER, GOLDSTEIN & FOX P.L.L.C.**
**1100 NEW YORK AVENUE, N.W.**
**WASHINGTON DC 20005**

| | | |
|---|---|---|
| In re Application of | : | |
| Mark DALE et al. | : | DECISION GRANTING STATUS |
| Application No. 12/980,137 | : | UNDER 37 CFR 1.47(a) |
| Filed: December 28, 2010 | : | |
| Atty. Docket No.: 1875.3170002 | : | |

This is a corrected version of the decision mailed previously on June 11, 2011 in March 18, 2011. The Office regrets any inconvenience to the petitioner.

The petition is **GRANTED**.

Where status under 37 CFR 1.47 is granted in a first application and the nonsigning inventor does not later join in the filing by executing an oath or declaration for the application, and another application (a child application) is later filed claiming the benefit of the filing date of the first application and using the declaration of the prior application, status under 37 CFR 1.47 continues to exist in the child application. Prior Application No. 10/352,251 of which the instant application claims priority benefits under 35 USC 120, was accorded 37 CFR 1.47 status.

37 CFR 1.63(d)(3) states:

> "Where the executed oath or declaration of which a copy is submitted for a continuation or divisional application was originally filed in a prior application accorded status under § 1.47, the copy of the executed oath or declaration for such prior application must be accompanied by:
>
> (i) a copy of the decision granting a petition to accord § 1.47 status to the prior application, unless all inventors or legal representatives have filed an oath or declaration to join in an application accorded status under § 1.47 of which the continuation or divisional application claims a benefit under 35 U.S.C. 120, 121, or 365(c).

The above-identified application and papers are now in compliance with 37 CFR 1.47(a). This application is hereby accorded rule 1.47(a) status. As provided in 37 CFR 1.47(c),

no notice of this application's filing will be forwarded to the nonsigning inventor nor will such notice be published in the Official Gazette[1] since notice regarding the filing of the prior application was given to the nonsigning inventor.

General inquiries relating to this decision should be directed to Robert DeWitty, Petitions Attorney, Office of Petitions (571-272-8427).

for Ramesh Krishnamurthy

David Bucci
Petitions Examiner
Office of Petitions

[1] Note Federal Register, Vol. 65, No. 175; Friday, September 8, 2000.

UNITED STATES PATENT AND TRADEMARK OFFICE

Commissioner for Patents
United States Patent and Trademark Office
P.O. Box 1450
Alexandria, VA 22313-1450
www.uspto.gov

In re Application of
DAVID J. MORRISON

Application No. 12980139

Filed:

Attorney Docket No. 17433.15

:DECISION ON PETITION TO MAKE SPECIAL
:UNDER 37 CFR 1.102(c)(1)

This is a decision on the electronic petition under 37 CFR 1.102 (c)(1), filed 28-DEC-2010 to make the above-identified application special based on applicant's age as set forth in MPEP § 708.02, Section IV.

The petition is **GRANTED**.

A grantable petition to make an application special under 37 CFR 1.102(c)(1), MPEP § 708.02, Section IV: Applicant's Age must include a statement by applicant or a registered practitioner having evidence that applicant is at least 65 years of age. No fee is required.

Accordingly, the above-identified application has been accorded "special" status and will be taken up for action by the examiner upon the completion of all pre-examination processing.

Telephone inquiries concerning this electronic decision should be directed to the Electronic Business Center at 866-217-9197.

All other inquiries concerning either the examination or status of the application should be directed to the Technology Center.

UNITED STATES PATENT AND TRADEMARK OFFICE

Commissioner for Patents
United States Patent and Trademark Office
P.O. Box 1450
Alexandria, VA 22313-1450
www.uspto.gov

In re Application of
C. Kumar N. Patel

Application No. 12980164

Filed:

Attorney Docket No. 10-24309

:DECISION ON PETITION TO MAKE SPECIAL
:UNDER 37 CFR 1.102(c)(1)

This is a decision on the electronic petition under 37 CFR 1.102 (c)(1), filed 28-DEC-2010 to make the above-identified application special based on applicant's age as set forth in MPEP § 708.02, Section IV.

The petition is **GRANTED**.

A grantable petition to make an application special under 37 CFR 1.102(c)(1), MPEP § 708.02, Section IV: Applicant's Age must include a statement by applicant or a registered practitioner having evidence that applicant is at least 65 years of age. No fee is required.

Accordingly, the above-identified application has been accorded "special" status and will be taken up for action by the examiner upon the completion of all pre-examination processing.

Telephone inquiries concerning this electronic decision should be directed to the Electronic Business Center at 866-217-9197.

All other inquiries concerning either the examination or status of the application should be directed to the Technology Center.

**Doc Code: PET.GREEN**
**Document Description: Petition for Green Tech Pilot**

PTO/SB/420 (11-10)
Approved for use through 01/31/2011. OMB 0651-0062
U.S. Patent and Trademark Office; U.S. DEPARTMENT OF COMMERCE
Under the Paperwork Reduction Act of 1995, no persons are required to respond to a collection of information unless it displays a valid OMB control number.

# PETITION TO MAKE SPECIAL UNDER THE GREEN TECHNOLOGY PILOT PROGRAM

| | | | | | |
|---|---|---|---|---|---|
| Attorney Docket Number: | 22194-77944 | Application Number (if known): | Not Yet Assigned | Filing date: | December 28, 2010 |
| First Named Inventor: | Chin-Yao Tsai | | | | |
| Title: | SOLAR CELL STRUCTURE AND MANUFACTURING METHOD THEREOF | | | | |

**APPLICANT HEREBY REQUESTS TO PARTICIPATE IN THE GREEN TECHNOLOGY PILOT PROGRAM FOR THE ABOVE-IDENTIFIED APPLICATION. See Instruction Sheet on page 2.**

This petition must be timely filed electronically using the USPTO electronic filing system, EFS-Web.

1. By filing this petition:

   **Applicant is requesting early publication: Applicant hereby requests early publication under 37 CFR 1.219 and the publication fee set forth in 37 CFR 1.18(d) accompanies this request.**

2. By filing this petition: applicant is agreeing to make an election without traverse in a telephonic interview and elect an invention that meets the eligibility requirements for the Green Technology Pilot Program, if the Office determines that the claims are not obviously directed to a single invention. See Instruction Sheet.

3. This request is accompanied by statements of special status for the eligibility requirement.

4. The application contains no more than three (3) independent claims and twenty (20) total claims.

5. The application does not contain any multiple dependent claims.

6. Other attachments:

| | | | |
|---|---|---|---|
| Signature | /Tim Tingkang Xia/ | Date | December 28, 2010 |
| Name (Print/Typed) | Tim Tingkang Xia | Registration Number | 45,242 |

***Note**: Signatures of all the inventors or assignees of record of the entire interest or their representative(s) are required in accordance with 37 CFR 1.33 and 11.18. Please see 37 CFR 1.4(d) for the form of the signature. If necessary, submit multiple forms if more than one signature, see below*.*

☐ *Total of 1 forms are submitted.

UNITED STATES PATENT AND TRADEMARK OFFICE

UNITED STATES DEPARTMENT OF COMMERCE
United States Patent and Trademark Office
Address: COMMISSIONER FOR PATENTS
P.O. Box 1450
Alexandria, Virginia 22313-1450
www.uspto.gov

| APPLICATION NO. | FILING DATE | FIRST NAMED INVENTOR | ATTORNEY DOCKET NO. | CONFIRMATION NO. |
|---|---|---|---|---|
| 12/980,203 | 12/28/2010 | Chin-Yao Tsai | 22194-77944 | 4318 |

24728 7590 01/25/2011
MORRIS MANNING MARTIN LLP
3343 PEACHTREE ROAD, NE
1600 ATLANTA FINANCIAL CENTER
ATLANTA, GA 30326

| EXAMINER |
|---|

| ART UNIT | PAPER NUMBER |
|---|---|
| 1725 | |

| NOTIFICATION DATE | DELIVERY MODE |
|---|---|
| 01/25/2011 | ELECTRONIC |

**Please find below and/or attached an Office communication concerning this application or proceeding.**

The time period for reply, if any, is set in the attached communication.

Notice of the Office communication was sent electronically on above-indicated "Notification Date" to the following e-mail address(es):

jxs@mmmlaw.com
ipdocket@mmmlaw.com
ppz@mmmlaw.com

UNITED STATES PATENT AND TRADEMARK OFFICE

Commissioner for Patents
United States Patent and Trademark Office
P.O. Box 1450
Alexandria, VA 22313-1450
www.uspto.gov

01/25/2011

MORRIS MANNING MARTIN LLP
3343 PEACHTREE ROAD, NE
1600 ATLANTA FINANCIAL CENTER
ATLANTA GA 30326

| | | |
|---|---|---|
| In re Application of | : | |
| Tsai | : | DECISION ON PETITION |
| Application No. 12/980,203 | : | TO MAKE SPECIAL UNDER |
| Filed: 12/28/2010 | : | THE GREEN TECHNOLOGY |
| Attorney Docket No. **22194-77944** | : | PILOT PROGRAM |

This is a decision on the petition under 37 CFR 1.102, filed 12/28/2010, to make the above-identified application special under the pilot program for applications pertaining to Green Technologies as set forth in 74 Federal Register Notice 64666 (December 8, 2009) and amended by 75 Federal Register Notice 28554 (May 21, 2010) and 75 Federal Register Notice 69049 (November 10, 2010).

The petition is **GRANTED**.

A grantable petition to make an application special under 37 CFR 1.102 and the pilot program as set forth in 74 FR 64666 must be directed to a nonprovisional application filed under 35 USC 111(a) or be a national stage entry under 35 USC 371, exclusive of any reissue applications.

In order to qualify for special status, the following requirements must be met. 1) The application must have no more than 3 independent claims and no more than 20 total claims. 2) The application must not contain any multiple dependent claims. 3) The petition must state the basis for seeking special status, i.e., the claimed invention either: A) materially enhances the quality of the environment or B) materially contributes to: i) the discovery or development of renewable energy resources, ii) the more efficient utilization and conservation of energy resources, or iii) greenhouse gas emission reduction. 4) If the disclosure is not clear on its face that the claimed invention materially contributes under category (A) or (B), the petition must be accompanied by a statement by the applicant, assignee, or an attorney/agent registered to practice before the Office explaining how the materiality standard is met. 5) A statement that applicant will agree to make an election without traverse in a telephonic interview if a restriction requirement is made by the examiner. 6) The petition to make special must be filed electronically. 7) The petition must be filed at least one day prior to the date that a first Office Action appears in the Patent Application Information Retrieval (PAIR) system. 8) The petition must be accompanied by a

request for early publication in compliance with 37 CFR 1.219 and include the publication fee as set forth in 37 CFR 1.18(d).

The requirement for a fee for consideration of the petition to make special for applications pertaining to Green Technologies has been waived.

The instant petition complies with items 1 – 8 above. Accordingly, the above-identified application has been accorded "special" status.

Telephone inquires concerning this decision should be directed to Tom Dunn at 571-272-1171.

The application is being forwarded to the Technology Center Art Unit 1725 for action on the merits commensurate with this decision.

/Tom Dunn/

Tom Dunn
Quality Assurance Specialist
Technology Center 1700

UNITED STATES PATENT AND TRADEMARK OFFICE

UNITED STATES DEPARTMENT OF COMMERCE
United States Patent and Trademark Office
Address: COMMISSIONER FOR PATENTS
P.O. Box 1450
Alexandria, Virginia 22313-1450
www.uspto.gov

| APPLICATION NO. | FILING DATE | FIRST NAMED INVENTOR | ATTORNEY DOCKET NO. | CONFIRMATION NO. |
|---|---|---|---|---|
| 12/980,213 | 12/28/2010 | Sung Min Hwang | 10694.071.00 | 4337 |

30827 7590 02/02/2011
MCKENNA LONG & ALDRIDGE LLP
1900 K STREET, NW
WASHINGTON, DC 20006

| EXAMINER |
|---|

| ART UNIT | PAPER NUMBER |
|---|---|
| 2811 | |

| MAIL DATE | DELIVERY MODE |
|---|---|
| 02/02/2011 | PAPER |

**Please find below and/or attached an Office communication concerning this application or proceeding.**

The time period for reply, if any, is set in the attached communication.

UNITED STATES PATENT AND TRADEMARK OFFICE

Commissioner for Patents
United States Patent and Trademark Office
P.O. Box 1450
Alexandria, VA 22313-1450
www.uspto.gov

**MCKENNA LONG & ALDRIDGE LLP**
**1900 K STREET, NW**
**WASHINGTON DC 20006**

| | |
|---|---|
| **In re Application of** | **: DECISION ON REQUEST TO** |
| **Sung Min HWANG** | **: PARTICIPATE IN THE PATENT** |
| **Application No.: 12/980,213** | **: PROSECUTION HIGHWAY** |
| **Filed: 28 December 2010** | **: PROGRAM AND PETITION** |
| **Attorney Docket No.: 10694.071.00** | **: TO MAKE SPECIAL UNDER** |
| **For: LIGHT EMITTING DEVICE,** | **: 37 CFR 1.102(a)** |
| **LIGHT EMITTING DEVICE** | |
| **PACKAGE AND LIGHTING SYSTEM** | |

This is a decision on the request to participate in the Patent Prosecution Highway (PPH) program and the petition under 37 CFR 1.102(a), filed 28 December 2010, to make the above-identified application special.

The request and petition are **DISMISSED**.

## Discussion

A grantable request to participate in the PPH program and petition to make special require:

1. The U.S. application is

    a. a Paris Convention application which either
        i. validly claims priority under 35 U.S.C. 119(a) and 37 CFR 1.55 to one or more applications filed in the KIPO, or
        ii. validly claims priority under 35 U.S.C. 119(a)/365(a) to a PCT application that contains no priority claims,

    or

    b. a national stage application under the PCT (an application which entered the national stage in the U.S. from a PCT international application after compliance with 35 U.S.C. 371), which PCT application
        i. validly claims priority under 35 U.S.C. 365(b) to an application filed in the KIPO, or
        ii. validly claims priority under 35 U.S.C. 365(b) to a PCT application that contains no priority claims, or
        iii. contains no priority claim,

    or

c. a so-called bypass application filed under 35 U.S.C. 111(a) which validly claims benefit under 35 U.S.C. 120 to a PCT application, which PCT application
    i. validly claims priority under 35 U.S.C. 365(b) to an application filed in the KIPO, or
    ii. validly claims priority under 35 U.S.C. 365(b) to a PCT application that contains no priority claims, or
    iii. contains no priority claim;

2. Applicant must submit a copy of:
    a. The allowable/patentable claim(s) from the KR application(s);
    b. An English translation of the allowable/patentable claim(s), and
    c. A statement that the English translation is accurate (if the claims were published in a language other than English);
3. Applicant must:
    a. Ensure that all the claims in the U.S. application must sufficiently correspond or be amended to sufficiently correspond to the allowable/patentable claim(s) in the KR application(s), and
    b. Submit a claims correspondence table in English;
4. Examination of the U.S. application has not begun;
5. Applicant must submit:
    a. A copy of all the office actions (which are relevant to patentability), excluding "Decision to Grant a Patent" from each of the KR application(s) containing the allowable/patentable claim(s);
    b. An English language translation of the KIPO office action; and
    c. A statement that the English translation is accurate (if the office actions are not in the English language);
6. Applicant must submit:
    a. An IDS listing the documents cited by the KIPO examiner in the KIPO office action (unless already filed in this application); and
    b. Copies of all the documents cited in the KIPO office action, except U.S. patents or U.S. patent application publications (unless already filed in this application);

This request to participate in the PPH program and petition is assessed as follows:

Requirements 1, 2, 3, 4, and 5 above are considered to have been met.
However the request to participate in the PPH program fails to meet requirement 6.

Regarding requirement 6, applicant as failed to submit an IDS listing KRI020090104454 A which was cited by the KIPO examiner. A copy of the reference has been received. The IDS filed 28 December 2010 listed KR 2003-0066957 A twice.

Applicant is given **ONE** opportunity within a time period of **ONE MONTH or THIRTY DAYS**, whichever is longer, from the mailing date of this decision to correct the deficiencies. **NO EXTENSION OF TIME UNDER 37 CFR 1.136 IS PERMITTED.** If the deficiencies are not corrected with the time period given, the application will await action in its regular turn.

Response must be filed via the Electronic Filing System (EFS) using the document description: Petition to make special under Patent Pros Hwy. Any preliminary amendments and IDS submitted with the PPH documents must be separately indexed as a preliminary amendment and IDS, respectively.

Telephone inquiries concerning this decision should be directed to Lee W. Young at (571) 272-4549.

All other inquiries concerning the examination or status of the application is accessible in the PAIR system at http://www.uspto.gov/ebc.index.html.

Lee W. Young
TQAS
Technology Center 2800 – Semiconductors
Electrical & Optical Systems & Components

UNITED STATES PATENT AND TRADEMARK OFFICE

UNITED STATES DEPARTMENT OF COMMERCE
United States Patent and Trademark Office
Address: COMMISSIONER FOR PATENTS
P.O. Box 1450
Alexandria, Virginia 22313-1450
www.uspto.gov

| APPLICATION NO. | FILING DATE | FIRST NAMED INVENTOR | ATTORNEY DOCKET NO. | CONFIRMATION NO. |
|---|---|---|---|---|
| 12/980,213 | 12/28/2010 | Sung Min Hwang | 10694.071.00 | 4337 |

30827 7590 04/26/2011
MCKENNA LONG & ALDRIDGE LLP
1900 K STREET, NW
WASHINGTON, DC 20006

| EXAMINER |
|---|

| ART UNIT | PAPER NUMBER |
|---|---|
| 2811 | |

| MAIL DATE | DELIVERY MODE |
|---|---|
| 04/26/2011 | PAPER |

**Please find below and/or attached an Office communication concerning this application or proceeding.**

The time period for reply, if any, is set in the attached communication.

UNITED STATES PATENT AND TRADEMARK OFFICE

Commissioner for Patents
United States Patent and Trademark Office
P.O. Box 1450
Alexandria, VA 22313-1450
www.uspto.gov

**MCKENNA LONG & ALDRIDGE LLP**
**1900 K STREET, NW**
**WASHINGTON DC 20006**

| | |
|---|---|
| **In re Application of** | **: DECISION ON REQUEST TO** |
| **Sung Min HWANG** | **: PARTICIPATE IN THE PATENT** |
| **Application No.: 12/980,213** | **: PROSECUTION HIGHWAY** |
| **Filed: 28 December 2010** | **: PROGRAM AND PETITION** |
| **Attorney Docket No.: 10694.071.00** | **: TO MAKE SPECIAL UNDER** |
| **For: LIGHT EMITTING DEVICE,** | **: 37 CFR 1.102(a)** |
| **LIGHT EMITTING DEVICE** | |
| **PACKAGE AND LIGHTING SYSTEM** | |

This is a decision on the request to participate in the Patent Prosecution Highway (PPH) program and the petition under 37 CFR 1.102(a), filed 28 December 2010 and 11 February 2011, to make the above-identified application special.

The request and petition are **GRANTED**.

**Discussion**

A grantable request to participate in the PPH program and petition to make special require:

1. The U.S. application is

    a. a Paris Convention application which either
        i. validly claims priority under 35 U.S.C. 119(a) and 37 CFR 1.55 to one or more applications filed in the KIPO, or
        ii. validly claims priority under 35 U.S.C. 119(a)/365(a) to a PCT application that contains no priority claims,

    or

    b. a national stage application under the PCT (an application which entered the national stage in the U.S. from a PCT international application after compliance with 35 U.S.C. 371), which PCT application
        i. validly claims priority under 35 U.S.C. 365(b) to an application filed in the KIPO, or
        ii. validly claims priority under 35 U.S.C. 365(b) to a PCT application that contains no priority claims, or
        iii. contains no priority claim,

    or

c. a so-called bypass application filed under 35 U.S.C. 111(a) which validly claims benefit under 35 U.S.C. 120 to a PCT application, which PCT application
    i. validly claims priority under 35 U.S.C. 365(b) to an application filed in the KIPO, or
    ii. validly claims priority under 35 U.S.C. 365(b) to a PCT application that contains no priority claims, or
    iii. contains no priority claim;

2. Applicant must submit a copy of:
    a. The allowable/patentable claim(s) from the KR application(s);
    b. An English translation of the allowable/patentable claim(s), and
    c. A statement that the English translation is accurate (if the claims were published in a language other than English);
3. Applicant must:
    a. Ensure that all the claims in the U.S. application must sufficiently correspond or be amended to sufficiently correspond to the allowable/patentable claim(s) in the KR application(s), and
    b. Submit a claims correspondence table in English;
4. Examination of the U.S. application has not begun;
5. Applicant must submit:
    a. A copy of all the office actions (which are relevant to patentability), excluding "Decision to Grant a Patent" from each of the KR application(s) containing the allowable/patentable claim(s);
    b. An English language translation of the KIPO office action; and
    c. A statement that the English translation is accurate (if the office actions are not in the English language);
6. Applicant must submit:
    a. An IDS listing the documents cited by the KIPO examiner in the KIPO office action (unless already filed in this application); and
    b. Copies of all the documents cited in the KIPO office action, except U.S. patents or U.S. patent application publications (unless already filed in this application);

The request to participate in the PPH program and petition comply with the above requirements. Accordingly, the above-identified application has been accorded "special" status.

Telephone inquiries concerning this decision should be directed to Lee W. Young at 571-272-4549.

All other inquiries concerning the examination or status of the application is accessible in the PAIR system at http://uspto.gov/ebc/index.html.

Lee W. Young
TQAS
Technology Center 2800 – Semiconductors
Electrical & Optical Systems & Components

UNITED STATES PATENT AND TRADEMARK OFFICE

Commissioner for Patents
United States Patent and Trademark Office
P.O. Box 1450
Alexandria, VA 22313-1450
www.uspto.gov

KILPATRICK TOWNSEND & STOCKTON LLP
TWO EMBARCADERO CENTER
EIGHTH FLOOR
SAN FRANCISCO CA 94111-3834

MAILED
NOV 02 2011
OFFICE OF PETITIONS

| | | |
|---|---|---|
| In re Application of | : | |
| RHODES and KHAMIS | : | DECISION ACCORDING STATUS |
| Application No. 12/980,223 | : | UNDER 37 CFR 1.47(a) |
| Filed: 12/28/2010 | : | |
| Attorney Docket No. 92563-796963(000110US) | : | |
| Title: HYBRID SENSOR ARRAY | : | |

This is in response to the petition under 37 CFR 1.47(a) filed October 12, 2011. Applicants obtained an extension of time for response within the third month. Thus, the petition is filed timely.

The petition under 37 CFR 1.47(a) is **granted**.

Applicants established that they provided a complete copy of the application to the non-signing inventor for his review. Additionally, applicants showed that through his conduct, the non-signing inventor has constructively refused to sign the declaration presented to him and join in the application

The above-identified application and papers have been reviewed and are found to be in compliance with 37 CFR 1.47(a). Accordingly, the above-identified application is hereby accorded Rule 1.47(a) status. As provided in 37 CFR 1.47(c), this Office will forward notice of this application's filing to the non-signing inventor at the last known address provided in the petition. Notice of the filing of this application will also be published in the Official Gazette.

The application is being returned to the Office of Patent Application Processing.

Inquiries regarding this decision should be directed to the undersigned at (571) 272-3211.

C. T. Donnell

Christina Tartera Donnell
Senior Petitions Attorney
Office of Petitions

UNITED STATES PATENT AND TRADEMARK OFFICE

Commissioner for Patents
United States Patent and Trademark Office
P.O. Box 1450
Alexandria, VA 22313-1450
www.uspto.gov

Samuel M. Khamis
953 S. Van Ness Avenue, #2
San Francisco, CA 94110

MAILED
NOV 02 2011
OFFICE OF PETITIONS

In re Application of
RHODES and KHAMIS
Application No. 12/980,223
Filed: 12/28/2010
Attorney Docket No. 92563-796963(000110US)
Title: HYBRID SENSOR ARRAY

LETTER

Dear Mr. Khamis:

You are named as a joint inventor in the above identified United States patent application, filed under the provisions of 35 U.S.C. 116 (United States Code), and 37 CFR 1.47(a), Rules of Practice in Patent Cases. Should a patent be granted on the application you will be designated therein as a joint inventor.

As a named inventor you are entitled to inspect any paper in the file wrapper of the application, order copies of all or any part thereof (at a prepaid cost per 37 CFR 1.19) or make your position of record in the application. Alternatively, you may arrange to do any of the preceding through a registered patent attorney or agent presenting written authorization from you. If you care to join the application, counsel of record (see below) would presumably assist you. Joining in the application would entail the filing of an appropriate oath or declaration by you pursuant to 37 CFR 1.63.

Requests for information regarding your application should be directed to the File Information Unit at 571-272-3150. Information regarding how to pay for and order a copy of the application, or a specific paper in the application should be directed to Certification Division at 571-272-3150 or 1-800-972-6382 (outside the Washington D.C. area).

C. T. Donnell
Christina Tartera Donnell
Senior Petitions Attorney
Office of Petitions

KILPATRICK TOWNSEND & STOCKTON LLP
TWO EMBARCADERO CENTER
EIGHTH FLOOR
SAN FRANCISCO CA 94111-3834

**Doc Code: PET.GREEN**
**Document Description: Petition for Green Tech Pilot**

PTO/SB/420 (11-10)
Approved for use through 01/31/2011. OMB 0651-0062
U.S. Patent and Trademark Office; U.S. DEPARTMENT OF COMMERCE
Under the Paperwork Reduction Act of 1995, no persons are required to respond to a collection of information unless it displays a valid OMB control number.

# PETITION TO MAKE SPECIAL UNDER THE GREEN TECHNOLOGY PILOT PROGRAM

| | | | | | |
|---|---|---|---|---|---|
| Attorney Docket Number: | 22194-77943 | Application Number (if known): | Not Yet Assigned | Filing date: | December 28, 2010 |
| First Named Inventor: | Chin-Yao Tsai | | | | |
| Title: | SOLAR CELL AND MANUFACTURING METHOD THEREOF | | | | |

**APPLICANT HEREBY REQUESTS TO PARTICIPATE IN THE GREEN TECHNOLOGY PILOT PROGRAM FOR THE ABOVE-IDENTIFIED APPLICATION. See Instruction Sheet on page 2.**

This petition must be timely filed electronically using the USPTO electronic filing system, EFS-Web.

1. By filing this petition:

   **Applicant is requesting early publication: Applicant hereby requests early publication under 37 CFR 1.219 and the publication fee set forth in 37 CFR 1.18(d) accompanies this request.**

2. By filing this petition: applicant is agreeing to make an election without traverse in a telephonic interview and elect an invention that meets the eligibility requirements for the Green Technology Pilot Program, if the Office determines that the claims are not obviously directed to a single invention. See Instruction Sheet.

3. This request is accompanied by statements of special status for the eligibility requirement.

4. The application contains no more than three (3) independent claims and twenty (20) total claims.

5. The application does not contain any multiple dependent claims.

6. Other attachments:

| | | | |
|---|---|---|---|
| Signature | /Tim Tingkang Xia/ | Date | December 28, 2010 |
| Name (Print/Typed) | Tim Tingkang Xia | Registration Number | 45,242 |

***Note**: Signatures of all the inventors or assignees of record of the entire interest or their representative(s) are required in accordance with 37 CFR 1.33 and 11.18. Please see 37 CFR 1.4(d) for the form of the signature. If necessary, submit multiple forms if more than one signature, see below*.*

☐ *Total of 1 forms are submitted.

UNITED STATES PATENT AND TRADEMARK OFFICE

UNITED STATES DEPARTMENT OF COMMERCE
United States Patent and Trademark Office
Address: COMMISSIONER FOR PATENTS
P.O. Box 1450
Alexandria, Virginia 22313-1450
www.uspto.gov

| APPLICATION NO. | FILING DATE | FIRST NAMED INVENTOR | ATTORNEY DOCKET NO. | CONFIRMATION NO. |
|---|---|---|---|---|
| 12/980,233 | 12/28/2010 | Chin-Yao TSAI | 22194-77943 | 4366 |

24728 7590 01/19/2011
MORRIS MANNING MARTIN LLP
3343 PEACHTREE ROAD, NE
1600 ATLANTA FINANCIAL CENTER
ATLANTA, GA 30326

| EXAMINER |
|---|

| ART UNIT | PAPER NUMBER |
|---|---|
| 2811 | |

| NOTIFICATION DATE | DELIVERY MODE |
|---|---|
| 01/19/2011 | ELECTRONIC |

**Please find below and/or attached an Office communication concerning this application or proceeding.**

The time period for reply, if any, is set in the attached communication.

Notice of the Office communication was sent electronically on above-indicated "Notification Date" to the following e-mail address(es):

jxs@mmmlaw.com
ipdocket@mmmlaw.com
ppz@mmmlaw.com

UNITED STATES PATENT AND TRADEMARK OFFICE

Commissioner for Patents
United States Patent and Trademark Office
P.O. Box 1450
Alexandria, VA 22313-1450
www.uspto.gov

MORRIS MANNING MARTIN LLP
3343 PEACHTREE ROAD, NE
1600 ATLANTA FINANCIAL CENTER
ATLANTA GA 30326

| | | |
|---|---|---|
| In re Application of | : | |
| Chin-Yao TSAI | : | DECISION ON PETITION |
| Application No. 12/980,233 | : | TO MAKE SPECIAL UNDER |
| Filed: December 28, 2010 | : | THE GREEN TECHNOLOGY |
| Attorney Docket No. 22194-77943 | : | PILOT PROGRAM |

This is a decision on the petition under 37 CFR 1.102, filed on December 28, 2010, to make the above-identified application special under the pilot program for applications pertaining to Green Technologies as set forth 74 Federal Register Notice 64666 (December 8, 2009) and amended by 75 Federal Register Notice 28554 (May 21, 2010) and 75 Federal Register Notice 69049 (November 10, 2010).

The petition is **GRANTED**.

A grantable petition to make an application special under 37 CFR 1.102 and the pilot program as set forth in 74 FR 64666 must be directed to a nonprovisional application filed under 35 USC 111(a) or be a national stage entry under 35 USC 371, exclusive of any reissue applications.

In order to qualify for special status, the following requirements must be met. 1) The application must have no more than 3 independent claims and no more than 20 total claims. 2) The application must not contain any multiple dependent claims. 3) The petition must state the basis for seeking special status, i.e., the claimed invention either: A) materially enhances the quality of the environment or B) materially contributes to: i) the discovery or development of renewable energy resources, ii) the more efficient utilization and conservation of energy resources, or iii) greenhouse gas emission reduction. 4) If the disclosure is not clear on its face that the claimed invention materially contributes under category (A) or (B), the petition must be accompanied by a statement by the applicant, assignee, or an attorney/agent registered to practice before the Office explaining how the materiality standard is met. 5) A statement that applicant will agree to make an election without traverse in a telephonic interview if a restriction requirement is made by the examiner. 6) The petition to make special must be filed electronically. 7) The petition must be filed at least one day prior to the date that a first Office Action appears in the Patent Application Information Retrieval (PAIR) system. 8) The petition must be accompanied by a request for early publication in compliance with 37 CFR 1.219 and include the publication fee as set forth in 37 CFR 1.18(d).

The requirement for a fee for consideration of the petition to make special for applications pertaining to Green Technologies has been waived.

The instant petition complies with items 1 – 8 above. Accordingly, the above-identified application has been accorded "special" status.

Telephone inquires concerning this decision should be directed to Lee W. Young at 571-272-4549.

The application is being forwarded to the Technology Center Art Unit 2811 for action in its regular turn.

Lee W. Young
Quality Assurance Specialist
Technology Center 2800

**Doc Code: PET.GREEN**
**Document Description: Petition for Green Tech Pilot**

PTO/SB/420 (11-10)
Approved for use through 01/31/2011. OMB 0651-0062
U.S. Patent and Trademark Office; U. S. DEPARTMENT OF COMMERCE
Under the Paperwork Reduction Act of 1995, no persons are required to respond to a collection of information unless it displays a valid OMB control number.

# PETITION TO MAKE SPECIAL UNDER THE GREEN TECHNOLOGY PILOT PROGRAM

| | | |
|---|---|---|
| Attorney Docket Number: 00800-0032 | Application Number (if known): Unknown | Filing date: 12/28/2010 |
| First Named Inventor: Michael Lynn Free | | |
| Title: MODIFIED COPPER-ZINC-TIN SEMICONDUCTOR FILMS, USES THEREOF AND RELATED METHODS | | |

**APPLICANT HEREBY REQUESTS TO PARTICIPATE IN THE GREEN TECHNOLOGY PILOT PROGRAM FOR THE ABOVE-IDENTIFIED APPLICATION. See Instruction Sheet on page 2.**

This petition must be timely filed electronically using the USPTO electronic filing system, EFS-Web.

1. By filing this petition:

   **Applicant is requesting early publication: Applicant hereby requests early publication under 37 CFR 1.219 and the publication fee set forth in 37 CFR 1.18(d) accompanies this request.**

2. By filing this petition: applicant is agreeing to make an election without traverse in a telephonic interview and elect an invention that meets the eligibility requirements for the Green Technology Pilot Program, if the Office determines that the claims are not obviously directed to a single invention. See Instruction Sheet.

3. This request is accompanied by statements of special status for the eligibility requirement.

4. The application contains no more than three (3) independent claims and twenty (20) total claims.

5. The application does not contain any multiple dependent claims.

6. Other attachments: _____

| | |
|---|---|
| Signature /N. Meredith Porembski/ | Date December 28, 2010 |
| Name (Print/Typed) N. Meredith Porembski | Registration Number 61,159 |

***Note:*** *Signatures of all the inventors or assignees of record of the entire interest or their representative(s) are required in accordance with 37 CFR 1.33 and 11.18. Please see 37 CFR 1.4(d) for the form of the signature. If necessary, submit multiple forms for more than one signature see below*.*

☒ *Total of 1 forms are submitted.

The information is required to obtain or retain a benefit by the public which is to file (and by the USPTO to process) an application. Confidentiality is governed by 35 U.S.C. 122 and 37 CFR 1.11 and 1.14. This collection is estimated to take 12 hours to complete, including gathering, preparing, and submitting the completed application form to the USPTO. Time will vary depending upon the individual case. Any comments on the amount of time you require to complete this form and/or suggestions for reducing this burden, should be sent to the Chief Information Officer, U.S. Patent and Trademark Office, U.S. Department of Commerce, P.O. Box 1450, Alexandria, VA 22313-1450. DO NOT SEND FEES OR COMPLETED FORMS TO THIS ADDRESS. **SEND TO: Commissioner for Patents, P.O. Box 1450, Alexandria, VA 22313-1450.**

*If you need assistance in completing the form, call 1-800-PTO-9199 and select option 2.*

Under the Paperwork Reduction Act of 1995, no persons are required to respond to a collection of information unless it displays a valid OMB control number.

# Instruction Sheet for Petition to Make Special Under the Green Technology Pilot Program

(Not to be Submitted to the USPTO)

**The following is a summary of the requirements (for more information see the notices (i) "Pilot Program for Green Technologies Including Greenhouse Gas Reduction," (ii) "Elimination of Classification Requirement in the Green Technology Pilot Program," and (iii) "Expansion and Extension of the Green Technology Pilot Program," available on the USPTO web site at http://www.uspto.gov/patents/init_events/green_tech.jsp):**

1) The application must be a non-reissue, non-provisional utility application filed under 35 U.S.C. 111 (a), or an international application that has entered the national stage in compliance with 35 U.S.C. 371, irrespective of the filing date of the application. Reexamination proceedings are excluded from this pilot program.

2) The application must contain three or fewer independent claims and twenty or fewer total claims. The application must not contain any multiple dependent claims. For an application that contains more than three independent claims or twenty total claims, or multiple dependent claims, applicant must file a preliminary amendment in compliance with 37 CFR 1.121 to cancel the excess claims and/or the multiple dependent claims at the time the petition to make special is filed.

3) The claims must be directed to a single invention that materially enhances the quality of the environment, or that materially contributes to: (1) the discovery or development of renewable energy resources; (2) the more efficient utilization and conservation of energy resources; or (3) green house gas emission reduction (see the eligibility requirements of sections II and III of the notice (i) cited above). The petition must include a statement that, if the USPTO determines that the claims are directed to multiple inventions (e.g., in a restriction requirement), applicant will agree to make an election without traverse in a telephonic interview, and elect an invention that meets the eligibility requirements in section II or III of the notice (i) cited above.

4) The petition to make special must be timely filed electronically using the USPTO electronic filing system, EFS-Web, and selecting the document description of "Petition for Green Tech Pilot" on the EFS-Web screen. Applicant should use form PTO/SB/420, which is available as a Portable Document Format (PDF) fillable form in EFS-Web and on the USPTO Web site.

5) The petition to make special must be filed at least one day prior to the date that a first Office action (which may be an Office action containing only a restriction requirement) appears in the Patent Application Information Retrieval (PAIR) system. Applicant may check the status of the application using PAIR.

6) The petition to make special must be accompanied by a request for early publication in compliance with 37 CFR 1.219 and the publication fee set forth in 37 CFR 1.18(d).

## Privacy Act Statement

The **Privacy Act of 1974 (P.L. 93-579)** requires that you be given certain information in connection with your submission of the attached form related to a patent application or patent. Accordingly, pursuant to the requirements of the Act, please be advised that: (1) the general authority for the collection of this information is 35 U.S.C. 2(b)(2); (2) furnishing of the information solicited is voluntary; and (3) the principal purpose for which the information is used by the U.S. Patent and Trademark Office is to process and/or examine your submission related to a patent application or patent. If you do not furnish the requested information, the U.S. Patent and Trademark Office may not be able to process and/or examine your submission, which may result in termination of proceedings or abandonment of the application or expiration of the patent.

The information provided by you in this form will be subject to the following routine uses:

1. The information on this form will be treated confidentially to the extent allowed under the Freedom of Information Act (5 U.S.C. 552) and the Privacy Act (5 U.S.C 552a). Records from this system of records may be disclosed to the Department of Justice to determine whether disclosure of these records is required by the Freedom of Information Act.
2. A record from this system of records may be disclosed, as a routine use, in the course of presenting evidence to a court, magistrate, or administrative tribunal, including disclosures to opposing counsel in the course of settlement negotiations.
3. A record in this system of records may be disclosed, as a routine use, to a Member of Congress submitting a request involving an individual, to whom the record pertains, when the individual has requested assistance from the Member with respect to the subject matter of the record.
4. A record in this system of records may be disclosed, as a routine use, to a contractor of the Agency having need for the information in order to perform a contract. Recipients of information shall be required to comply with the requirements of the Privacy Act of 1974, as amended, pursuant to 5 U.S.C. 552a(m).
5. A record related to an International Application filed under the Patent Cooperation Treaty in this system of records may be disclosed, as a routine use, to the International Bureau of the World Intellectual Property Organization, pursuant to the Patent Cooperation Treaty.
6. A record in this system of records may be disclosed, as a routine use, to another federal agency for purposes of National Security review (35 U.S.C. 181) and for review pursuant to the Atomic Energy Act (42 U.S.C. 218(c)).
7. A record from this system of records may be disclosed, as a routine use, to the Administrator, General Services, or his/her designee, during an inspection of records conducted by GSA as part of that agency's responsibility to recommend improvements in records management practices and programs, under authority of 44 U.S.C. 2904 and 2906. Such disclosure shall be made in accordance with the GSA regulations governing inspection of records for this purpose, and any other relevant (*i.e.*, GSA or Commerce) directive. Such disclosure shall not be used to make determinations about individuals.
8. A record from this system of records may be disclosed, as a routine use, to the public after either publication of the application pursuant to 35 U.S.C. 122(b) or issuance of a patent pursuant to 35 U.S.C. 151. Further, a record may be disclosed, subject to the limitations of 37 CFR 1.14, as a routine use, to the public if the record was filed in an application which became abandoned or in which the proceedings were terminated and which application is referenced by either a published application, an application open to public inspection or an issued patent.
9. A record from this system of records may be disclosed, as a routine use, to a Federal, State, or local law enforcement agency, if the USPTO becomes aware of a violation or potential violation of law or regulation.

Atty. Dkt. No. 00800-0032

***IN THE UNITED STATES PATENT AND TRADEMARK OFFICE***

Applicant: Michael Lynn Free

Title: MODIFIED COPPER-ZINC-TIN SEMICONDUCTOR FILMS, USES THEREOF AND RELATED METHODS

Appl. No.: Filed herewith

Filing Date: 12/28/2010

Examiner: Unassigned

Art Unit: Unknown

Confirmation Number: Unknown

**STATEMENT OF SPECIAL STATUS TO ACCOMPANY PETITION TO MAKE SPECIAL UNDER THE GREEN TECHNOLOGY PILOT PROGRAM**

Commissioner for Patents
P.O. Box 1450
Alexandria, VA 22313-1450

Dear Sir/Madam:

This invention, as claimed, relates to materials for use in photovoltaic (solar) cells, the cells themselves, and related methods. Thus, the invention materially contributes to the development of renewable energy resources.

The Director is authorized to charge Deposit Account No. 50-5254 for any fees required for the filing or to credit any overpayment. Any required petition should be considered provisionally made.

Respectfully submitted,

Date: December 28, 2010

By: /N. Meredith Porembski/

BELL & MANNING, LLC
Customer Number: 96227
Telephone: (608) 661-3593
Facsimile: (608) 661-3597

N. Meredith Porembski
Attorney for Applicants
Registration No. 61,159

UNITED STATES PATENT AND TRADEMARK OFFICE

UNITED STATES DEPARTMENT OF COMMERCE
United States Patent and Trademark Office
Address: COMMISSIONER FOR PATENTS
P.O. Box 1450
Alexandria, Virginia 22313-1450
www.uspto.gov

| APPLICATION NO. | FILING DATE | FIRST NAMED INVENTOR | ATTORNEY DOCKET NO. | CONFIRMATION NO. |
|---|---|---|---|---|
| 12/980,304 | 12/28/2010 | Michael Lynn Free | 00800-0032 | 4467 |

96227 7590 03/08/2011
Bell & Manning, LLC
122 E. Olin Avenue
Suite 290
Madison, WI 53713

| EXAMINER |
|---|

| ART UNIT | PAPER NUMBER |
|---|---|
| 2812 | |

| MAIL DATE | DELIVERY MODE |
|---|---|
| 03/08/2011 | PAPER |

**Please find below and/or attached an Office communication concerning this application or proceeding.**

The time period for reply, if any, is set in the attached communication.

UNITED STATES PATENT AND TRADEMARK OFFICE

Commissioner for Patents
United States Patent and Trademark Office
P.O. Box 1450
Alexandria, VA 22313-1450
www.uspto.gov

Bell & Manning, LLC
122 E. Olin Avenue
Suite 290
Madison WI 53713

| | | |
|---|---|---|
| In re Application of | : | |
| FREE et al. | : | DECISION ON PETITION |
| Application No. 12/980,304 | : | TO MAKE SPECIAL UNDER |
| Filed: December 28, 2010 | : | THE GREEN TECHNOLOGY |
| Attorney Docket No. 00800-0032 | : | PILOT PROGRAM |

This is a decision on the petition under 37 CFR 1.102, filed December 28, 2010, to make the above-identified application special under the pilot program for applications pertaining to Green Technologies as set forth 74 Federal Register Notice 64666 (December 8, 2009) and amended by 75 Federal Register Notice 28554 (May 21, 2010) and 75 Federal Register Notice 69049 (November 10, 2010).

The petition is **GRANTED**.

A grantable petition to make an application special under 37 CFR 1.102 and the pilot program as set forth in 74 FR 64666 must be directed to a nonprovisional application filed under 35 USC 111(a) or be a national stage entry under 35 USC 371, exclusive of any reissue applications.

In order to qualify for special status, the following requirements must be met. 1) The application must have no more than 3 independent claims and no more than 20 total claims. 2) The application must not contain any multiple dependent claims. 3) The petition must state the basis for seeking special status, i.e., the claimed invention either: A) materially enhances the quality of the environment or B) materially contributes to: i) the discovery or development of renewable energy resources, ii) the more efficient utilization and conservation of energy resources, or iii) greenhouse gas emission reduction. 4) If the disclosure is not clear on its face that the claimed invention materially contributes under category (A) or (B), the petition must be accompanied by a statement by the applicant, assignee, or an attorney/agent registered to practice before the Office explaining how the materiality standard is met. 5) A statement that applicant will agree to make an election without traverse in a telephonic interview if a restriction requirement is made by the examiner. 6) The petition to make special must be filed electronically. 7) The petition must be filed at least one day prior to the date that a first Office Action appears in the Patent Application Information Retrieval (PAIR) system. 8) The petition must be accompanied by a request for early publication in compliance with 37 CFR 1.219 and include the publication fee as set forth in 37 CFR 1.18(d).

The requirement for a fee for consideration of the petition to make special for applications pertaining to Green Technologies has been waived.

The instant petition complies with items 1 – 8 above. Accordingly, the above-identified application has been accorded "special" status.

Telephone inquires concerning this decision should be directed to Lee W. Young at 571-272-4549.

The application is being forwarded to the Technology Center Art Unit 2812 for action in its regular turn.

Lee W. Young
Quality Assurance Specialist
Technology Center 2800

UNITED STATES PATENT AND TRADEMARK OFFICE

Commissioner for Patents
United States Patent and Trademark Office
P.O. Box 1450
Alexandria, VA 22313-1450
www.uspto.gov

In re Application of
Franklin S. Briles

Application No. 12980316

Filed:

Attorney Docket No. 6336.003-01

:DECISION ON PETITION TO MAKE SPECIAL
:UNDER 37 CFR 1.102(c)(1)

This is a decision on the electronic petition under 37 CFR 1.102 (c)(1), filed 29-DEC-2010 to make the above-identified application special based on applicant's age as set forth in MPEP § 708.02, Section IV.

The petition is **GRANTED**.

A grantable petition to make an application special under 37 CFR 1.102(c)(1), MPEP § 708.02, Section IV: Applicant's Age must include a statement by applicant or a registered practitioner having evidence that applicant is at least 65 years of age. No fee is required.

Accordingly, the above-identified application has been accorded "special" status and will be taken up for action by the examiner upon the completion of all pre-examination processing.

Telephone inquiries concerning this electronic decision should be directed to the Electronic Business Center at 866-217-9197.

All other inquiries concerning either the examination or status of the application should be directed to the Technology Center.

UNITED STATES PATENT AND TRADEMARK OFFICE

Commissioner for Patents
United States Patent and Trademark Office
P.O. Box 1450
Alexandria, VA 22313-1450
www.uspto.gov

**ALLAN C. ENTIS PH.D.,**
**INTELLECTUAL PROPERTY LTD.**
**6 RAOUL WALLENBERG STREET**
**RAMAT HACHAYAL**
**TEL AVIV 69719 IL ISRAEL**

**MAILED**

FEB 15 2011

**OFFICE OF PETITIONS**

| | | |
|---|---|---|
| In re Application of | : | |
| ENTIS | : | |
| Application No. 12/980,389 | : | DECISION ON PETITION |
| Filed: December 29, 2010 | : | TO MAKE SPECIAL UNDER |
| Attorney Docket No. C018-P1096-US | : | 37 CFR 1.102(c)(1) |
| | : | |

This is a decision on the petition under 37 CFR 1.102(c)(1), filed December 29, 2010, to make the above-identified application special based on applicant's age as set forth in M.P.E.P. § 708.02, Section IV.

The petition is **GRANTED**.

A grantable petition to make an application special under 37 CFR 1.102(c)(1) and MPEP § 708.02, Section IV: Applicant's Age must be accompanied by evidence showing that at least one of the applicants is 65 years of age, or more, such as a birth certificate or a statement by applicant. No fee is required

The instant petition includes a statement by applicant. Accordingly, the above-identified application has been accorded "special" status.

Telephone inquiries concerning this decision should be directed to the undersigned at (571) 272-6735.

All other inquiries concerning either the examination or status of the application should be directed to the Technology Center at (571) 272-3600.

The application is being forwarded to Technology Center Art Unit 3632 for action on the merits commensurate with this decision.

/Diane C. Goodwyn/
Diane C. Goodwyn
Petitions Examiner
Office of Petitions

UNITED STATES PATENT AND TRADEMARK OFFICE

Commissioner for Patents
United States Patent and Trademark Office
P.O. Box 1450
Alexandria, VA 22313-1450
www.uspto.gov

**THE MUELLER LAW OFFICE, P.C.**
**12707 HIGH BLUFF DRIVE, SUITE 200**
**SAN DIEGO CA 92130**

MAILED
MAY 24 2011
OFFICE OF PETITIONS

| | | |
|---|---|---|
| In re Application of | : | |
| Venkatesan et al. | : | |
| Application No. 12/980,427 | : | ON PETITION |
| Filed: December 29, 2010 | : | |
| Attorney Docket No. TWINP057/TCA-059y | : | |

This is a decision on the petition under 37 CFR 1.182, filed March 24, 2011, to change the order of the names of the inventors.

The petition is **GRANTED**.

The order of the names of the inventors will be changed as follows:

1. Venkatesan Murali
2. Christopher J. Petti
3. Theodore Smick
4. Mohamed M. Hilali
5. Kathy J. Jackson
6. Zhiyong Li
7. Gopalakrishna Prabhu

A Corrected Filing Receipt reflecting the above changes is enclosed.

This matter is now being referred to Technology Center AU 2812 to await examination.

Telephone inquiries regarding this decision should be directed to Joan Olszewski at (571) 272-7751. All other inquiries should be directed to the Technology Center.

/Liana Walsh/
Liana Walsh
Petitions Examiner
Office of Petitions

Enclosure: Corrected Filing Receipt

UNITED STATES PATENT AND TRADEMARK OFFICE

UNITED STATES DEPARTMENT OF COMMERCE
United States Patent and Trademark Office
Address: COMMISSIONER FOR PATENTS
P.O. Box 1450
Alexandria, Virginia 22313-1450
www.uspto.gov

| APPLICATION NUMBER | FILING or 371(c) DATE | GRP ART UNIT | FIL FEE REC'D | ATTY.DOCKET.NO | TOT CLAIMS | IND CLAIMS |
|---|---|---|---|---|---|---|
| 12/980,427 | 12/29/2010 | 2812 | 527 | TWINP057/TCA-059y | 14 | 1 |

**CONFIRMATION NO. 4668**

**CORRECTED FILING RECEIPT**

67362
THE MUELLER LAW OFFICE, P.C.
12707 High Bluff Drive, Suite 200
San Diego, CA 92130

*OC000000047769944*

Date Mailed: 05/20/2011

Receipt is acknowledged of this non-provisional patent application. The application will be taken up for examination in due course. Applicant will be notified as to the results of the examination. Any correspondence concerning the application must include the following identification information: the U.S. APPLICATION NUMBER, FILING DATE, NAME OF APPLICANT, and TITLE OF INVENTION. Fees transmitted by check or draft are subject to collection. Please verify the accuracy of the data presented on this receipt. **If an error is noted on this Filing Receipt, please submit a written request for a Filing Receipt Correction. Please provide a copy of this Filing Receipt with the changes noted thereon. If you received a "Notice to File Missing Parts" for this application, please submit any corrections to this Filing Receipt with your reply to the Notice. When the USPTO processes the reply to the Notice, the USPTO will generate another Filing Receipt incorporating the requested corrections**

**Applicant(s)**

Venkatesan Murali, San Jose, CA;
Christopher J. Petti, Mountain View, CA;
Theodore Smick, Essex, MA;
Mohamed M. Hilali, Austin, TX;
Kathy J. Jackson, Felton, CA;
Zhiyong Li, Los Altos, CA;
Gopalakrishna Prabhu, San Jose, CA;

**Assignment For Published Patent Application**

TWIN CREEKS TECHNOLOGIES, INC., San Jose, CA

**Power of Attorney:** The patent practitioners associated with Customer Number 67362

**Domestic Priority data as claimed by applicant**

**Foreign Applications** (You may be eligible to benefit from the **Patent Prosecution Highway** program at the USPTO. Please see http://www.uspto.gov for more information.)

**If Required, Foreign Filing License Granted:** 01/21/2011

The country code and number of your priority application, to be used for filing abroad under the Paris Convention, is **US 12/980,427**

**Projected Publication Date:** 07/05/2012

**Non-Publication Request:** No

**Early Publication Request:** No
**** SMALL ENTITY ****

**Title**

Method to Form a Device Including an Annealed Lamina and Having Amorphous Silicon on Opposing Faces

**Preliminary Class**

438

## PROTECTING YOUR INVENTION OUTSIDE THE UNITED STATES

Since the rights granted by a U.S. patent extend only throughout the territory of the United States and have no effect in a foreign country, an inventor who wishes patent protection in another country must apply for a patent in a specific country or in regional patent offices. Applicants may wish to consider the filing of an international application under the Patent Cooperation Treaty (PCT). An international (PCT) application generally has the same effect as a regular national patent application in each PCT-member country. The PCT process **simplifies** the filing of patent applications on the same invention in member countries, but **does not result** in a grant of "an international patent" and does not eliminate the need of applicants to file additional documents and fees in countries where patent protection is desired.

Almost every country has its own patent law, and a person desiring a patent in a particular country must make an application for patent in that country in accordance with its particular laws. Since the laws of many countries differ in various respects from the patent law of the United States, applicants are advised to seek guidance from specific foreign countries to ensure that patent rights are not lost prematurely.

Applicants also are advised that in the case of inventions made in the United States, the Director of the USPTO must issue a license before applicants can apply for a patent in a foreign country. The filing of a U.S. patent application serves as a request for a foreign filing license. The application's filing receipt contains further information and guidance as to the status of applicant's license for foreign filing.

Applicants may wish to consult the USPTO booklet, "General Information Concerning Patents" (specifically, the section entitled "Treaties and Foreign Patents") for more information on timeframes and deadlines for filing foreign patent applications. The guide is available either by contacting the USPTO Contact Center at 800-786-9199, or it can be viewed on the USPTO website at http://www.uspto.gov/web/offices/pac/doc/general/index.html.

For information on preventing theft of your intellectual property (patents, trademarks and copyrights), you may wish to consult the U.S. Government website, http://www.stopfakes.gov. Part of a Department of Commerce initiative, this website includes self-help "toolkits" giving innovators guidance on how to protect intellectual property in specific countries such as China, Korea and Mexico. For questions regarding patent enforcement issues, applicants may call the U.S. Government hotline at 1-866-999-HALT (1-866-999-4158).

## LICENSE FOR FOREIGN FILING UNDER

## Title 35, United States Code, Section 184

## Title 37, Code of Federal Regulations, 5.11 & 5.15

**GRANTED**

The applicant has been granted a license under 35 U.S.C. 184, if the phrase "IF REQUIRED, FOREIGN FILING LICENSE GRANTED" followed by a date appears on this form. Such licenses are issued in all applications where

the conditions for issuance of a license have been met, regardless of whether or not a license may be required as set forth in 37 CFR 5.15. The scope and limitations of this license are set forth in 37 CFR 5.15(a) unless an earlier license has been issued under 37 CFR 5.15(b). The license is subject to revocation upon written notification. The date indicated is the effective date of the license, unless an earlier license of similar scope has been granted under 37 CFR 5.13 or 5.14.

This license is to be retained by the licensee and may be used at any time on or after the effective date thereof unless it is revoked. This license is automatically transferred to any related applications(s) filed under 37 CFR 1.53(d). This license is not retroactive.

The grant of a license does not in any way lessen the responsibility of a licensee for the security of the subject matter as imposed by any Government contract or the provisions of existing laws relating to espionage and the national security or the export of technical data. Licensees should apprise themselves of current regulations especially with respect to certain countries, of other agencies, particularly the Office of Defense Trade Controls, Department of State (with respect to Arms, Munitions and Implements of War (22 CFR 121-128)); the Bureau of Industry and Security, Department of Commerce (15 CFR parts 730-774); the Office of Foreign AssetsControl, Department of Treasury (31 CFR Parts 500+) and the Department of Energy.

**NOT GRANTED**

No license under 35 U.S.C. 184 has been granted at this time, if the phrase "IF REQUIRED, FOREIGN FILING LICENSE GRANTED" DOES NOT appear on this form. Applicant may still petition for a license under 37 CFR 5.12, if a license is desired before the expiration of 6 months from the filing date of the application. If 6 months has lapsed from the filing date of this application and the licensee has not received any indication of a secrecy order under 35 U.S.C. 181, the licensee may foreign file the application pursuant to 37 CFR 5.15(b).

UNITED STATES PATENT AND TRADEMARK OFFICE

UNITED STATES DEPARTMENT OF COMMERCE
United States Patent and Trademark Office
Address: COMMISSIONER FOR PATENTS
P.O. Box 1450
Alexandria, Virginia 22313-1450
www.uspto.gov

| APPLICATION NO. | FILING DATE | FIRST NAMED INVENTOR | ATTORNEY DOCKET NO. | CONFIRMATION NO. |
|---|---|---|---|---|
| 12/980,451 | 12/29/2010 | Shuju FAN | HW707371 | 4712 |

77399 7590 01/20/2011
Leydig, Voit & Mayer, Ltd
(for Huawei Technologies Co., Ltd)
Two Prudential Plaza Suite 4900
180 North Stetson Avenue
Chicago, IL 60601

| EXAMINER |
|---|
| LOUIS JACQUES, JACQUES H |

| ART UNIT | PAPER NUMBER |
|---|---|
| 2100 | |

| NOTIFICATION DATE | DELIVERY MODE |
|---|---|
| 01/20/2011 | ELECTRONIC |

**Please find below and/or attached an Office communication concerning this application or proceeding.**

The time period for reply, if any, is set in the attached communication.

Notice of the Office communication was sent electronically on above-indicated "Notification Date" to the following e-mail address(es):

Chgpatent@leydig.com
uspatent@huawei.com

UNITED STATES PATENT AND TRADEMARK OFFICE

Commissioner for Patents
United States Patent and Trademark Office
P.O. Box 1450
Alexandria, VA 22313-1450
www.uspto.gov

Leydig, Voit & Mayer, Ltd
(for Huawei Technologies Co., Ltd)
Two Prudential Plaza Suite 4900
180 North Stetson Avenue
Chicago, IL 60601

| | |
|---|---|
| In re Application of: Fan et al.<br>Serial No.: 12/980,451<br>Filed: December 29, 2010<br>Docket: HW707371<br>Title: METHOD AND APPARATUS FOR ENCODING FEEDBACK SIGNALS | DECISION ON PETITION TO MAKE SPECIAL FOR NEW APPLICATION UNDER 37 C.F.R. § 1.102 & M.P.E.P. § 708.02 |

This is a decision on the petition filed on December 29, 2010 to make the above-identified application special for accelerated examination procedure under 37 C.F.R. § 1.102(d).

The petition to make the application special is **DISMISSED**.

REGULATION AND PRACTICE

A grantable petition to make special under 37 C.F.R. § 1.102(d) and pursuant to the "Change to Practice for Petitions in Patent Applications to Make Special and for Accelerated Examination" published in the Federal Register on June 26, 2006 (71 Fed. Reg. 36323), must satisfy the following conditions:

I. Conditions Regarding the Application:

1. the application must be a non-reissue utility or design application filed under 37 CFR 1.111(a);

2. the application, the petition and the required fees must be filed electronically using the USPTO's electronic filing system (EFS), or EFS-web; if not filed electronically, a statement asserting that EFS and EFS-web were not available during the normal business hours.

3. at the time of filing, the application must be complete under 37 CFR 1.51 and in condition for examination;

4. the application must contain three or fewer independent claims and twenty or fewer total claims and the claims must be directed to a single invention.

II. Conditions Regarding the Petition:

The petition must:

1. be filed with the application;

2. include a statement that applicant agrees that the dependent claims will be grouped together with and not to separately argue the patentability of any independent claim from which they depend during any appeal in the application;

3. include a statement that applicant agrees to make an election without traverse in a telephone interview.

4. include a statement that applicant agrees to conduct such an interview when requested by the examiner.

5. include a statement, made based on a good faith belief, that a preexamination search in compliance with the following requirements, was conducted, including an identification of the field of search by United States class and subclass, where applicable, and for database searches, the search logic or chemical structure or sequence used as a query, the name of the file(s) searched and the database service, and the date of the search.

The preexamination search must:

5.1 involve U.S. patents and patent application publications, foreign patent documents, and non-patent literature, unless the applicant can justify with reasonable certainty that no references more pertinent than those already identified are likely to be found in the eliminated sources and includes such a justification with this statement;

5.2. be directed to the claimed invention and encompass all of the features of the claims, giving the claims the broadest reasonable expectation;

5.3. encompass the disclosed features that may be claimed.

6. must provide in support of the petition an accelerated examination support document.. An accelerated examination support document must include:

6.1. an information disclosure statement (IDS) in compliance with 37 CFR 1.98 citing each reference deemed most closely related to the subject matter of each of the claims;

6.2. an identification of all the limitations in the claims that are disclosed by the reference specifying where the limitation is disclosed in the cited reference;

6.3. a detailed explanation of how each of the claims are patentable over the references cited with particularity required by 37 CFR 1.111(b) and (c);

6.4. a concise statement of the utility of the invention as defined in each of the independent claims (unless the application is a design application);

6.5. a showing of where each limitation of the claims finds support under 35 USC 112, first paragraph, in the written description of the specification. If applicable, the showing must also identify: (1) each means- (or step) plus-function claim element that invokes consideration under 35 UDC 112, sixth paragraph; and (2) the structure, material, or acts in the specification that corresponds to each means- (or step) plus-function claim element that invokes consideration under 35 USC 112, sixth paragraph; if the application claims the benefit of one or more applications under title 35, United States Code, the showing must also include where each limitation of the claims finds support under 35 USC 112, first paragraph, in each such application in which such supports exists;

6.6. an identification of any cited references that may be disqualified under 35 USC 103(c).

REVIEW OF FACTS

The conditions I. 1-4 & II. 1-5, 5.1 & 6.6 above are considered to have been met. However, the petition fails to comply with conditions II. 5.2 - 5.3 & 6.1-6.5 above. Therefore, the petition fails to meet the required conditions to be accorded special status under the accelerated examination procedure.

Regarding the requirement of MPEP § 708.02(a)(I.)(H)[1] and items 5.2 - 5.3 above, the preexam search must be directed to the (instant) claimed invention and encompass all of the disclosed features of the (instant) claims. In addition, the preexam search must include all pertinent databases.

Specifically and with respect to items 5.2 - 5.3 above, Petitioner should identify whether the text search logic identified in the instant petition was utilized in combination with the field of search (i.e. class/subclasses as identified on page 2 of the instant petition)or separate therefrom (i.e. state whether or not the identified subclasses were searched in their entirety). In addition, based upon the claimed subject matter of the instant application, a search in the following class and subclass is necessary in order to provide full coverage of where the most pertinent references are most likely to be found: 714/749 (Retransmission if no ACK returned). Further, the IEEE database has not been identified as having been searched and would be a necessary search for the pending instant claims.

The additional search areas and search recommendations were confirmed with and recommended by a (primary) examiner in the pertinent art area.

With regard to the requirement of MPEP § 708.02(a)(I.)(I)(1) and item 6.1 above, in the AE Support Document, page 2 thereof, the listed publication date of Reference 1 "R1-090034, HS-DPCCH design framework for MC-HSDPA" of 07-Jan-2009 conflicts with the actual publication date of Jan. 12-16, 2009. Correction is required.

In addition, form PTO-1449 attached with the instant petition cites a total of two references and the instant petition specifically discusses both of those cited references. However, Petitioner also cites an additional form PTO-1449 on Jan.10, 2011 and is required to discuss all cited references deemed to be most closely related to the subject matter. However, applicant is PERMITTED to respond by identifying that the IDS filed with the instant petition are those references deemed to be in support of the petition and that the IDS filed on Jan. 10, 2011 as those references deemed to be NOT in support, if that is in fact the case.

With regard to the requirement of MPEP § 708.02(a)(I)(2) and item 6.2 above, Petitioner should provide a detailed discussion of each current and/or any newly cited reference(s), identifying subject matter by way of figure, page, paragraph and line numbers, as appropriate, as they pertain to the instant claim limitations (claims 1-6) of the instant application. Note that petitioner merely provides a brief discussion of what the references do not provide, rather than what the references clearly teach, on pages 2-5 of the instant petition.

[1] MPEP 8th ed. rev 5 August 2006

With regard to the requirement of MPEP § 708.02(a)(I.)(I)(3) and item 6.3 above, 37 CFR § 1.111 (c) states in part "the applicant or patent owner must clearly point out the patentable novelty which he or she thinks the claims present in view of the state of the art disclosed by the references cited." Specifically, on page 6 of the instant petition, Petitioner does not clearly point out the particular language of instant claims 1 - 6 that distinguishes i.e. the patentability analysis does not specifically identify limitations in the claims that are patentable but merely provides a broad and sweeping statement that the limitations are not taught. Also, the terse conclusionary statement of neither of the references disclose or suggest "a method of claim 1, an apparatus as defined in claim 3," etc, in insufficient.
For these reasons, the petition does not meet the requirement of MPEP § 708.02(a)(I.)(I)(3).

With regard to the requirement of MPEP § 708.02(a)(I.)(I)(4) and item 6.4 above, the concise statement of the utility ***must be of the invention as defined in <u>each</u> of the independent claims***. Note, contrary to that stated on page 7 of the instant petition, claim 6 is not an independent claim. Independent claims 1, 3 and 5 must be separately identified.

With respect to the requirement of MPEP § 708.02(a)(I.)(I)(5) and item 6.5 above, Petitioner fails to identify where each limitation <u>of the</u> <u>instant</u> <u>claims</u> finds support under 35 USC 112, first paragraph, in the written description of the specification. Support for each limitation of each pending claim must be proper identified. Specifically, reference is made to claims 2 and 6 wherein paragraph [0089] does not appear to provide full support for the claimed limitation. Petitioners attention is directed to paragraphs [0011] and [0090] for apparent additional support of these claim limitations. Correction is required.

Thus, the petition does not meet the conditions II. 5.2-5.3 and 6.1-6.5 above.

DECISION

For the above-stated reasons, the petition is **<u>DISMISSED</u>**. The application will therefore be taken up by the examiner for action in its regular turn.

Petitioner is given ***a single opportunity*** to perfect the petition. Any request for reconsideration of this decision must be submitted within 1 (one) month or 30 (thirty) days, whichever is longer, (no extension of time under 37 CFR 1.136(a) is permitted) from the date of this decision in order to be considered timely. Any request for reconsideration ***must fully address all of the deficiencies indicated above***. [emphasis added]

Petitioner is reminded that, upon granting of the special status of the application on request for reconsideration, the application will be processed expeditiously. However, due to the dismissal of the instant petition, examination may not be completed within twelve months of the filing date of the application.

Any inquiry regarding this decision should be directed to Brian Johnson, Quality Assurance Specialist, at (571) 272-3595.

Brian L. Johnson
Quality Assurance Specialist, WG 2110
Technology Center 2100

UNITED STATES PATENT AND TRADEMARK OFFICE

UNITED STATES DEPARTMENT OF COMMERCE
United States Patent and Trademark Office
Address: COMMISSIONER FOR PATENTS
P.O. Box 1450
Alexandria, Virginia 22313-1450
www.uspto.gov

| APPLICATION NO. | FILING DATE | FIRST NAMED INVENTOR | ATTORNEY DOCKET NO. | CONFIRMATION NO. |
|---|---|---|---|---|
| 12/980,451 | 12/29/2010 | Shuju FAN | HW707371 | 4712 |

77399 7590 03/03/2011
Leydig, Voit & Mayer, Ltd
(for Huawei Technologies Co., Ltd)
Two Prudential Plaza Suite 4900
180 North Stetson Avenue
Chicago, IL 60601

| EXAMINER |
|---|
| LOUIS JACQUES, JACQUES H |

| ART UNIT | PAPER NUMBER |
|---|---|
| 2100 | |

| NOTIFICATION DATE | DELIVERY MODE |
|---|---|
| 03/03/2011 | ELECTRONIC |

**Please find below and/or attached an Office communication concerning this application or proceeding.**

The time period for reply, if any, is set in the attached communication.

Notice of the Office communication was sent electronically on above-indicated "Notification Date" to the following e-mail address(es):

Chgpatent@leydig.com
uspatent@huawei.com

UNITED STATES PATENT AND TRADEMARK OFFICE

Commissioner for Patents
United States Patent and Trademark Office
P.O. Box 1450
Alexandria, VA 22313-1450
www.uspto.gov

Leydig, Voit & Meyer, Ltd
(for Huawei Technologies Co., Ltd)
Two Prudential Plaza Suite 4900
180 North Stetson Avenue
Chicago, IL 60601

| | |
|---|---|
| In re Application of: **FAN,** et al.<br>Serial No.: 12/980,451<br>Filed: December 29, 2010<br>Docket: HW707371<br>Title: **METHOD AND APPARATUS FOR ENCODING FEEDBACK SIGNALS** | DECISION ON PETITION TO MAKE SPECIAL FOR NEW APPLICATION UNDER 37 C.F.R. § 1.102 & M.P.E.P. § 708.02 |

This is a decision on the renewed petition filed on February 17, 2011 to make the above-identified application special for accelerated examination procedure under 37 C.F.R. § 1.102(d).

The original petition, submitted on December 29, 2010 was dismissed in the decision mailed on January 20, 2011.

The petition to make the application special is **GRANTED**. Note, the recitation of a "method of encoding signals" (page 5/24 of the AE Support Document), although not explicitly claimed, is understood to be in fact the "step of encoding signals" in claim 5.

The application is eligible for accelerated examination and the petition complies with the conditions for granting the application special status pursuant to the "Change to Practice for Petitions in Patent Applications to Make Special and for Accelerated Examination" published June 26, 2006, in the Federal Register. (71 Fed. Reg. 36323).

The prosecution of the instant application will be conducted expeditiously according to the following guidelines.

1. The application will be docketed to an examiner and taken up for action within two weeks of the date of this decision.

2. Restriction Practice:

If the examiner determines that the claims are not directed to a single invention, a telephone request to elect one single invention will be made pursuant to MPEP 812.01. As a prerequisite to the grant of this petition, the applicant has agreed to make an oral election, by telephone, without traverse. If the applicant refuses to make an election without traverse, or the examiner cannot

reach the applicant after a reasonable effort, the examiner will treat the first claimed invention (invention defined by claim 1) as having being constructively elected without traverse for examination.

3. Office action:
   If it is determined that, after appropriate consultation, there is a potential rejection or any other issue to be addressed, the examiner will telephone the applicant and arrange an interview to discuss and resolve the issue. An Office action, other than a Notice of Allowance and Fee(s) Due (Notice of Allowance), will not be issued unless either: 1) an interview was conducted but did not result in agreed to action that places the application in condition for allowance, or, 2) a determination is made that an interview would be unlikely to result in the application being placed in condition for allowance, and 3) an internal conference has been held to review any rejection of any claim.

4. Time for Reply:
   An Office action other than a Notice of Allowance or a final Office action will set a shortened statutory period of one month or thirty days, whichever is longer, for reply with no extension of time available under 37 CFR 1.136(a). Failure to timely file a reply within this non-extendible period for reply will result in the abandonment of the application.

5. Reply by Applicant:
   A timely reply to an Office action other than the Notice of Allowance must be submitted electronically via EFS or EFS-web and limited to addressing the rejections, objections and requirement made. Any amendment that attempts to: 1) add claims which would result in more than three pending independent claims or more than twenty pending total claims; 2) present claims not encompassed by the pre-examination search or an updated accelerated examination support document; or 3) present claims that are directed a non-elected invention or an invention other than that previously claimed and examined in the application, will be treated as not fully responsive and will not be entered.

   For any amendment to the claims (including any new claim) that is not encompassed by the accelerated examination support document, applicant must provide an updated accelerated examination support document that encompasses the amended or new claims at the time of filing of the amendment.

   To proceed expeditiously with the examination, it is recommended that a reply with amendments made to any claim or with any new claim being added be accompanied by an updated accelerated examination support document or a statement explaining how the amended or new claim is supported by the original accelerated examination support document.

6. Information Disclosure Statement (IDS):
   Any IDS filed during prosecution must be submitted electronically via EFS or EFS-web, accompanied by an updated accelerated examination support document, and be in compliance with 37 CFR 1.97 and 1.98.

7. Post-Allowance Processing:
   To expedite processing of the allowed application into a patent, the applicant must: 1) pay the required fees within one month of the date of the Notice of Allowance, and 2) not file any post allowance papers not required by the Office. In no event may the issue fee be paid and accepted later than three months from the date of the Notice of Allowance.

8. After-Final and Appeal Procedures:
   To expedite prosecution, after receiving the final Office action, applicant must: 1) promptly file a notice of appeal, an appeal brief and appeal fees; and 2) not request a pre-appeal brief conference.

   Any amendment, affidavit or other evidence filed after final Office action must comply with applicable rules and the requirements outlined in numbered paragraphs 5 and 6 above.

   On appeal, the application will proceed according to normal appeal procedures. After appeal, the application will again be treated special.

9. Proceedings Outside the Normal Examination Process:
   If the application becomes involved in a proceeding that is outside the normal examination process (e.g., a secrecy order, national security review, interference proceeding, petitions under 37 CFR 1.181, 182 or 183), the application will be treated special before and after such proceeding.

10. Final Disposition:
    The twelve-month goal of this accelerated examination procedure ends with a final disposition. The mailing of a final Office action, a Notice of Allowance, the filing of a Notice of Appeal, or the filing of a Request for Continued Examination (RCE) is the final disposition.

If, during prosecution, a paper is not filed electronically using EFS-web, a reply is filed but is not fully responsive, the application is involved in an appeal, or a proceeding outside normal examination process, the application will still be examined expeditiously, however, the final disposition may occur more than twelve months from the filing of the application. In addition, Applicant is reminded that due to the dismissal of the previous petition submission, examination may not be completed within twelve months of the filing date of the application.

Any inquiry regarding this decision should be directed to Brian Johnson, Quality Assurance Specialist, at (571) 272-3595. If attempts to reach the undersigned by telephone are unsuccessful, Kakali Chaki, Quality Assurance Specialist, can be reached at (571) 272-3719.

Brian Johnson, Quality Assurance Specialist
Technology Center 2100

**IN THE UNITED STATES PATENT AND TRADEMARK OFFICE**

| | |
|---|---|
| **First Named Inventor: Michael F. FINCH** | ) |
| **Confirmation No.: 4713** | ) |
| | ) |
| **Serial No.: 12/980,452** | ) |
| | ) |
| **Filing Date: 12-29-2010** | ) |
| | ) |
| **Atty Docket No.: 237646-1 (GECZ 201106US01)** | ) |

VIA EFS
Commissioner for Patents
P.O. Box 1450
Alexandria, VA 22313-1450

**Statement Concerning the Basis for the Special Status**

SIR:

Many power providers are currently experiencing a shortage of electric generating capacity due to increasing consumer demand for electricity. More specifically, generating plants are often unable to meet peak power demands resulting from electricity demanded by many consumers at the same time. (See [0001]).

In order to reduce high peak power demand, many power providers have instituted time of use metering and rates which include higher rates for energy usage during on-peak times and lower rates for energy usage during off-peak times. As a result, consumers are provided with an incentive to use electricity at off-peak times rather than on-peak times. (See [0002]).

Presently, to take advantage of the lower cost of electricity during off-peak times, a user must manually operate appliances or other electronic devices during the off-peak times. This is undesirable because a consumer may not

always be present in the home, or awake, to operate the appliance during off-peak hours. This is also undesirable because the consumer is required to manually track the current time to determine what hours are off-peak and on-peak. Therefore, there is a need to provide a system that facilitates operating appliances during off-peak hours in order to reduce consumer's electric bills and to reduce the load on generating plants during on-peak hours. (See [0003]).

In one aspect of the invention, a household energy management system and method for managing multiple appliances is provided comprising: a controller for managing power consumption of multiple appliances within a household; a communication network connecting the controller to one or more of the utility meter and/or the demand server; the controller maintains in a memory the managing of power consumption of the multiple appliances based on an association of one appliance to at least another appliance; and, the controller instructs one or more appliances to shed load demand, and wherein the at least another appliance sheds load or increases load based on the associated load shed of the one appliance. (See [0004]).

In another aspect, the invention provides a household energy management method for managing multiple household appliances, comprising: establishing a pre-determined association of one appliance to at least another appliance wherein a load change to the one appliance is associated to at least one load change to the at least another appliance; and, wherein shedding load of the one appliance initiates the load shedding or load increase of the at least another appliance. (See [0005]).

In yet another aspect, an appliance control method is provided comprising: a controller for controlling the operation of multiple appliances in a normal mode and a modified mode; the controller maintaining an association of one appliance to at least another appliance including establishing a hierarchy of an order and manner for the controller to disable, suspend, reduce, or increase one or more functions of the at least another appliance upon a reduction of load of the one appliance; and, wherein reducing the load of the one appliance in the modified mode initiates the load shedding or load increase of the at least another appliance. (See [0006]).

In still a further aspect, the invention provides a household energy management system and method for managing multiple appliances, comprising: a controller for managing power consumption of multiple appliances within a household, and a communication network connecting the controller to one or more of the utility meter and/or the demand server. The controller maintains in a memory an association of one appliance to at least another appliance including establishing a hierarchy of an order and manner for the controller to disable, suspend, reduce, or increase one or more functions of at least another appliance upon a reduction of load of one appliance one appliance to at least another appliance. The controller further instructs one or more appliances to shed load demand, wherein the at least another appliance sheds load or increases load based on the associated load shed of the one appliance. (See [0007]).

Technical advantages allow selective mapping beyond the capability of the isolated operational modifications of a single appliance (i.e. a specifically

targeted appliance). For example, load shedding for a clothes washer can be in response to 'another appliance' or 'water heater' or to allow for devices not specifically targeted. Additional variants can comprise bulk storage tanks for laundry, dishwasher, or dry cleaning appliances could shed circulation or filtering options on a load shed to pool pumps. Alternatively, an appliance or home energy monitor could be set to shed all loads, or portions of loads, whenever anything is sent a load shed command in order to maximize the economic or environmental benefits. (See [0026]).

Accordingly, Applicant respectfully submits that Special Status is sought on the basis that the embodiments disclosed herein materially contribute to the more efficient utilization and conservation of energy resources by improving home energy management of energy consuming electronic devices and appliances. Amongst several benefits, said embodiments allow for greater informational awareness and control of energy resources, which has been shown to encourage reductions in energy consumption, and results in greater energy efficiency on the part of consumers and utilities.

The undersigned representative may be contacted at the number below to facilitate the resolution of any matters. Please charge any fees that are incurred in connection with this Statement to deposit account no. 09-0470.

Respectfully submitted,

General Electric Company

By : /Allison W. Mages/
Allison W. Mages
Reg. No. 57,275

Dated: December 1, 2011

GE Global Patent Operation
2 Corporate Drive, Suite 648
Shelton, CT 06484
203-944-6730

Doc Code: PET.GREEN
Document Description: Petition for Green Tech Pilot

PTO/SB/420 (03-11)

# PETITION TO MAKE SPECIAL UNDER THE GREEN TECHNOLOGY PILOT PROGRAM

| | | |
|---|---|---|
| Attorney Docket Number: 237646-1 (GECZ 201106US01) | Application Number (if known): 12/980,452 | Filing date: 12-29-2010 |

First Named Inventor: Michael F. FINCH

Title: DEMAND RESPONSE OF DEVICES WHEN DIFFERENT DEVICES ARE BEING SIGNALED TO SHED LOAD

**APPLICANT HEREBY REQUESTS TO PARTICIPATE IN THE GREEN TECHNOLOGY PILOT PROGRAM FOR THE ABOVE-IDENTIFIED APPLICATION. See Instruction Sheet on page 2.**

This petition must be timely filed electronically using the USPTO electronic filing system, EFS-Web.

1. By filing this petition:

   **Applicant is requesting early publication: Applicant hereby requests early publication under 37 CFR 1.219 and the publication fee set forth in 37 CFR 1.18(d) accompanies this request.**

2. By filing this petition: applicant is agreeing to make an election without traverse in a telephonic interview and elect an invention that meets the eligibility requirements for the Green Technology Pilot Program, if the Office determines that the claims are not obviously directed to a single invention. See Instruction Sheet.

3. This request is accompanied by statements of special status for the eligibility requirement.

4. The application contains no more than three (3) independent claims and twenty (20) total claims.

5. The application does not contain any multiple dependent claims.

6. Other attachments: Statement Concerning the Basis for the Special Status

| | |
|---|---|
| Signature /Allison W. Mages/ | Date December 2, 2011 |
| Name (Print/Typed) Allison W. Mages | Registration Number 57,275 |

*Note: Signatures of all the inventors or assignees of record of the entire interest or their representative(s) are required in accordance with 37 CFR 1.33 and 11.18. Please see 37 CFR 1.4(d) for the form of the signature. If necessary, submit multiple forms for more than one signature, see below*.*

☐ *Total of _____ forms are submitted.

*If you need assistance in completing the form, call 1-800-PTO-9199 and select option 2.*

UNITED STATES PATENT AND TRADEMARK OFFICE

UNITED STATES DEPARTMENT OF COMMERCE
United States Patent and Trademark Office
Address: COMMISSIONER FOR PATENTS
P.O. Box 1450
Alexandria, Virginia 22313-1450
www.uspto.gov

| APPLICATION NO. | FILING DATE | FIRST NAMED INVENTOR | ATTORNEY DOCKET NO. | CONFIRMATION NO. |
|---|---|---|---|---|
| 12/980,452 | 12/29/2010 | MICHAEL F. FINCH | 237646 (GECZ 201106US01) | 4713 |

27885 7590 12/21/2011
FAY SHARPE LLP
1228 Euclid Avenue, 5th Floor
The Halle Building
Cleveland, OH 44115

| EXAMINER |
|---|
| NORTON, JENNIFER L |

| ART UNIT | PAPER NUMBER |
|---|---|
| 2121 | |

| MAIL DATE | DELIVERY MODE |
|---|---|
| 12/21/2011 | PAPER |

**Please find below and/or attached an Office communication concerning this application or proceeding.**

The time period for reply, if any, is set in the attached communication.

UNITED STATES PATENT AND TRADEMARK OFFICE

Commissioner for Patents
United States Patent and Trademark Office
P.O. Box 1450
Alexandria, VA 22313-1450
www.uspto.gov

FAY SHARPE LLP
1228 Euclid Avenue, 5th Floor
The Halle Building
Cleveland OH 44115

| | | |
|---|---|---|
| In re Application of: | : | |
| FINCH, Michael et al. | : | DECISION ON PETITION |
| Application No.: 12/980,452 | : | TO MAKE SPECIAL UNDER |
| Filed: December 29, 2010 | : | THE GREEN TECHNOLOGY |
| For: **DEMAND RESPONSE OF DEVICES WHEN DIFFERENT DEVICES ARE BEING SIGNALED TO SHED LOAD** | : | PILOT PROGRAM |

This is a decision on the petition under 37 CFR 1.102, filed December 2, 2011, to make the above-identified application special under the pilot program for applications pertaining to Green Technologies as set forth in 74 Federal Register Notice 64666 (December 8, 2009) and amended by 75 Federal Register Notice 28554 (May 21, 2010).

The petition is **GRANTED**.

A grantable petition to make an application special under 37 CFR 1.102 and the pilot program as set forth in 74 FR 64666 must be directed to a nonprovisional application filed under 35 USC 111(a) or be a national stage entry under 35 USC 371, exclusive of any reissue applications and be filed prior to the date of the notice, December 8, 2009.

In order to qualify for special status, the following requirements must be met. 1) The application must have no more than 3 independent claims and no more than 20 total claims. 2) The application must not contain any multiple dependent claims. 3) The petition must state the basis for seeking special status, i.e., the claimed invention either: A) materially enhances the quality of the environment or B) materially contributes to: i) the discovery or development of renewable energy resources, ii) the more efficient utilization and conservation of energy resources, or iii) greenhouse gas emission reduction. 4) If the disclosure is not clear on its face that the claimed invention materially contributes under category (A) or (B), the petition must be accompanied by a statement by the applicant, assignee, or an attorney/agent registered to practice before the Office explaining how the materiality standard is met. 5) A statement that applicant will agree to make an election without traverse in a telephonic interview if a restriction requirement is made by the examiner. 6) The petition to make special must be filed electronically. 7) The petition

must be filed at least one day prior to the date that a first Office Action appears in the Patent Application Information Retrieval (PAIR) system. 8) The petition must be accompanied by a request for early publication in compliance with 37 CFR 1.219 and include the publication fee as set forth in 37 CFR 1.18(d).

The requirement for a fee for consideration of the petition to make special for applications pertaining to Green Technologies has been waived.

The instant petition complies with items 1 – 8 above. Accordingly, the above-identified application has been accorded "special" status.

The application is being forwarded to the Technology Center Art Unit 2121 for action on the merits commensurate with this decision.

Telephone inquires concerning this decision should be directed to Eddie C. Lee at 571-272-1732.

/Eddie C. Lee/

Quality Assurance Specialist
Technology Center 2100

**Doc Code: PET.GREEN**
**Document Description: Petition for Green Tech Pilot**

PTO/SB/420 (11-10)
Approved for use through 01/31/2011. OMB 0651-0062
U.S. Patent and Trademark Office; U. S. DEPARTMENT OF COMMERCE
Under the Paperwork Reduction Act of 1995, no persons are required to respond to a collection of information unless it displays a valid OMB control number.

# PETITION TO MAKE SPECIAL UNDER THE GREEN TECHNOLOGY PILOT PROGRAM

| | | |
|---|---|---|
| Attorney Docket Number: 6506-001 | Application Number (if known): | Filing date: 2010-12-29 |
| First Named Inventor: Shelton | | |
| Title: Chemical State Monitor for Refrigeration System | | |

**APPLICANT HEREBY REQUESTS TO PARTICIPATE IN THE GREEN TECHNOLOGY PILOT PROGRAM FOR THE ABOVE-IDENTIFIED APPLICATION. See Instruction Sheet on page 2.**

This petition must be timely filed electronically using the USPTO electronic filing system, EFS-Web.

1. By filing this petition:

   **Applicant is requesting early publication: Applicant hereby requests early publication under 37 CFR 1.219 and the publication fee set forth in 37 CFR 1.18(d) accompanies this request.**

2. By filing this petition: applicant is agreeing to make an election without traverse in a telephonic interview and elect an invention that meets the eligibility requirements for the Green Technology Pilot Program, if the Office determines that the claims are not obviously directed to a single invention. See Instruction Sheet.

3. This request is accompanied by statements of special status for the eligibility requirement.

4. The application contains no more than three (3) independent claims and twenty (20) total claims.

5. The application does not contain any multiple dependent claims.

6. Other attachments: Statements of Special Status, ADS, application, drawings, signed declaration, IDS

| | |
|---|---|
| Signature David Bennett | Date 2010-12-29 |
| Name (Print/Typed) David E. Bennett | Registration Number 32194 |

***Note:*** *Signatures of all the inventors or assignees of record of the entire interest or their representative(s) are required in accordance with 37 CFR 1.33 and 11.18. Please see 37 CFR 1.4(d) for the form of the signature. If necessary, submit multiple forms for more than one signature see below*.*

☐ *Total of _____ forms are submitted.

The information is required to obtain or retain a benefit by the public which is to file (and by the USPTO to process) an application. Confidentiality is governed by 35 U.S.C. 122 and 37 CFR 1.11 and 1.14. This collection is estimated to take 12 hours to complete, including gathering, preparing, and submitting the completed application form to the USPTO. Time will vary depending upon the individual case. Any comments on the amount of time you require to complete this form and/or suggestions for reducing this burden, should be sent to the Chief Information Officer, U.S. Patent and Trademark Office, U.S. Department of Commerce, P.O. Box 1450, Alexandria, VA 22313-1450. DO NOT SEND FEES OR COMPLETED FORMS TO THIS ADDRESS. **SEND TO: Commissioner for Patents, P.O. Box 1450, Alexandria, VA 22313-1450.**

*If you need assistance in completing the form, call 1-800-PTO-9199 and select option 2.*

IN THE UNITED STATES PATENT AND TRADEMARK OFFICE

| | | |
|---|---|---|
| In re Application of **Michael Shelton** | ) | |
| Serial No.: | ) | |
| | ) | PATENT PENDING |
| Filed: December 29, 2010 | ) | |
| | ) | Examiner: |
| For: **Chemical State Monitor for Refrigeration System** | ) | Group Art Unit: |
| Docket No: **6506-001** | ) | Confirmation No.: |

Commissioner for Patents
P.O. Box 1450
Alexandria, VA 22313-1450

**CERTIFICATE OF MAILING OR TRANSMISSION [37 CFR 1.8(a)]**

I hereby certify that this correspondence is being:

☐ deposited with the United States Postal Service on the date shown below with sufficient postage as first class mail in an envelope addressed to: Commissioner for Patents, P.O. Box 1450, Alexandria, VA 22313-1450.

☐ transmitted by facsimile on the date shown below to the United States Patent and Trademark Office at (571) 273-8300.

December 29, 2010 — Kathleen Koppen
Date — Kathleen Koppen

This correspondence is being:

☒ electronically submitted via EFS-Web

## STATEMENTS OF SPECIAL STATUS FOR ELIGIBILITY REQUIREMENTS

The claimed invention comprises methods and apparatus for monitoring the operating condition of a refrigeration system. Refrigeration systems are used in a variety of applications for cooling and/or heating. Refrigeration systems often operate at less than maximum efficiency due to problems that arise during normal operation. Examples of potential problems effecting performance include poor air flow across the evaporator or condenser, a frozen evaporator coil, a contaminated evaporator or condenser coil, low refrigerant levels, mechanical problems in the compressor, and faulty relays or other electrical components. When problems such as these arise, the refrigeration system may continue to operate, but with substantially reduced efficiency. The problem may not be detected for a long period of time, resulting in increased

energy consumption because the compressor is required to operate for longer periods in order to maintain the temperature target.

The claimed invention provides a monitoring system for a refrigeration system that can continuously monitor and detect problems in a refrigeration system. The monitoring device is sensitive enough to detect most problems before they have a substantial impact on the efficiency. The potential problems detected by the monitoring device include leakage of refrigerant. The monitoring system is simple in its design and inexpensive to install and operate. It may be applied to both existing systems and new systems.

The present application qualifies for special status for at least two reasons. First, the claimed invention promotes the more efficient utilization and conservation of energy resources. In this regard, a tremendous amount of energy is unnecessarily wasted because refrigeration systems are operated at less than maximum efficiency due to undetected problems. By providing early detection of potential problems, the amount of energy consumed by refrigeration equipment may be substantially reduced. On a national scale, the amount of the energy savings could be substantial.

Second, the present application qualifies for special status because it contributes to the reduction of greenhouse gas emissions. The harmful effects of refrigerant leakage is well documented. The Environmental Protection Agency (EPA) and many states have issued regulations regarding leak detection and repair. For example, Section 608 of the Clean Air Act provides regulations for the inspection and repair of refrigeration systems to prevent leakage of refrigerants into the atmosphere. The claimed invention may be incorporated into a compliance program to comply with the Clean Air Act and other state regulations regarding leak detection and repair of refrigeration systems.

For the foregoing reasons, it is respectfully requested that the present application be granted special status.

Respectfully submitted,

COATS & BENNETT, P.L.L.C.

Dated: December 29, 2010

David E. Bennett
Registration No.: 32,194

1400 Crescent Green, Suite 300
Cary, NC 27518

Telephone: (919) 854-1844
Facsimile: (919) 854-2084

UNITED STATES PATENT AND TRADEMARK OFFICE

UNITED STATES DEPARTMENT OF COMMERCE
United States Patent and Trademark Office
Address: COMMISSIONER FOR PATENTS
P.O. Box 1450
Alexandria, Virginia 22313-1450
www.uspto.gov

| APPLICATION NO. | FILING DATE | FIRST NAMED INVENTOR | ATTORNEY DOCKET NO. | CONFIRMATION NO. |
|---|---|---|---|---|
| 12/980,493 | 12/29/2010 | Michael Shelton | 6506-001 | 4791 |

24112 7590 01/19/2011
COATS & BENNETT, PLLC
1400 Crescent Green, Suite 300
Cary, NC 27518

| EXAMINER |
|---|

| ART UNIT | PAPER NUMBER |
|---|---|
| 3744 | |

| MAIL DATE | DELIVERY MODE |
|---|---|
| 01/19/2011 | PAPER |

**Please find below and/or attached an Office communication concerning this application or proceeding.**

The time period for reply, if any, is set in the attached communication.

UNITED STATES PATENT AND TRADEMARK OFFICE

Commissioner for Patents
United States Patent and Trademark Office
P.O. Box 1450
Alexandria, VA 22313-1450
www.uspto.gov

COATS & BENNETT, PLLC
1400 Crescent Green, Suite 300
Cary NC 27518

| | | |
|---|---|---|
| In re Application of | : | |
| SHELTON, MICHAEL et al | : | DECISION ON PETITION |
| Application No. 12/980,493 | : | TO MAKE SPECIAL UNDER |
| Filed: Dec. 29, 2010 | : | THE GREEN TECHNOLOGY |
| Attorney Docket No. 6506.001 | : | PILOT PROGRAM |

This is a decision on the petition under 37 CFR 1.102, filed Dec. 29, 2010, to make the above-identified application special under the pilot program for applications pertaining to Green Technologies as set forth in 74 Federal Register Notice 64666 (December 8, 2009) and amended by 75 Federal Register Notice 28554 (May 21, 2010) and 75 Federal Register Notice 69049 (November 10, 2010).

The petition is **dismissed**.

A grantable petition to make an application special under 37 CFR 1.102 and the pilot program as set forth in 74 FR 64666 must be directed to a nonprovisional application filed under 35 USC 111(a) or be a national stage entry under 35 USC 371, exclusive of any reissue applications.

In order to qualify for special status, the following requirements must be met. 1) The application must have no more than 3 independent claims and no more than 20 total claims. 2) The application must not contain any multiple dependent claims. 3) The petition must state the basis for seeking special status, i.e., the claimed invention either: A) materially enhances the quality of the environment or B) materially contributes to: i) the discovery or development of renewable energy resources, ii) the more efficient utilization and conservation of energy resources, or iii) greenhouse gas emission reduction. 4) If the disclosure is not clear on its face that the claimed invention materially contributes under category (A) or (B), the petition must be accompanied by a statement by the applicant, assignee, or an attorney/agent registered to practice before the Office explaining how the materiality standard is met. 5) A statement that applicant will agree to make an election without traverse in a telephonic interview if a restriction requirement is made by the examiner. 6) The petition to make special must be filed electronically. 7) The petition must be filed at least one day prior to the date that a first Office Action appears in the Patent

Application Information Retrieval (PAIR) system. 8) The petition must be accompanied by a request for early publication in compliance with 37 CFR 1.219 and include the publication fee as set forth in 37 CFR 1.18(d).

The requirement for a fee for consideration of the petition to make special for applications pertaining to Green Technologies has been waived.

The petition lacks item # 4.

In regard to item 4, petitioner should note that the instant petition includes a statement identifying the basis for the special status (i.e., whether the instant invention (1) materially enhances the quality of the environment or materially contributes to (2) development of renewable energy resources or energy conservation, or (3) greenhouse gas reduction) as required by sections II and III of the notice. However, as stated in the notice, applicant must also provide a statement pertaining to the materiality standard if the application disclosure is not clear on its face as to the materiality of the basis for the special status of the invention. This petition lacks such a statement and it is not agreed that the application on its face meets that materiality standard. Petitioner indicates that the claimed invention relates to efficient utilization of energy and energy conservation and reduction of greenhouse gas emission. This is not convincing. For example, it is not clear how the claimed refrigerant monitoring system and detection of problems will provide and enhance the quality of the environment or contribute to energy conservation or greenhouse gas reduction. It is a common sense that a less efficient refrigeration system will not perform efficiently.

Any reconsideration of this decision should be submitted through the USPTO electronic filing system, EFS-Web, and selecting the document description of "Petition for Green Tech Pilot" on the EFS-Web screen.

Telephone inquiries concerning this decision should be directed to Henry C. Yuen at 571-272-4856.

The application is currently undergoing pre-examination processing. The application will be forwarded to the Technology Center Art Unit 3744 for action in its regular turn.

/Henry C. Yuen/

Henry C. Yuen
Quality Assurance Specialist
Technology Center 3700

IN THE UNITED STATES PATENT AND TRADEMARK OFFICE

| | | |
|---|---|---|
| In re Application of<br>**Shelton** | ) | |
| Serial No.: **12/980,493** | ) | PATENT PENDING |
| Filed: **December 29, 2010** | ) | Examiner: |
| For: **Chemical State Monitor for Refrigeration System** | ) | Group Art Unit: |
| Attorney's Docket No: **6506-001** | ) | Confirmation No.: 4791 |

Commissioner for Patents
P.O. Box 1450
Alexandria, VA 22313-1450

**CERTIFICATE OF MAILING OR TRANSMISSION [37 CFR 1.8(a)]**

I hereby certify that this correspondence is being:

☐ deposited with the United States Postal Service on the date shown below with sufficient postage as first class mail in an envelope addressed to: Commissioner for Patents, P.O. Box 1450, Alexandria, VA 22313-1450.

☐ transmitted by facsimile on the date shown below to the United States Patent and Trademark Office at (571) 273-8300.

February 28, 2011 — Date

Kathleen Koppen

This correspondence is being:

☒ electronically submitted via EFS-Web

## REQUEST FOR RECONSIDERATION OF PETITION TO MAKE SPECIAL UNDER THE GREEN TECHNOLOGY PILOT PROGRAM

The telephone interview with Mr. Yuen explaining the reasons for the denial of the petition is greatly appreciated. In view of the clarification, Applicant has filed a Preliminary Amendment adding new claims 17-22. Claim 17 is directed to a "monitoring system for detecting leakage of refrigerant from a refrigeration system.", and claim 20 is directed to a corresponding method of "detecting refrigerant leakage in a refrigeration system." Claim 17 recites "a sensor for sensing a low level of the refrigerant in the collection chamber resulting from leakage of refrigerant." Claim 20 recites "sensing a low level of the refrigerant in the collection chamber resulting from leakage of refrigerant." Claim 17 further recites a controller for "detecting said refrigerant leakage based on the refrigerant level in the collection chamber."

Claim 20 recites "detecting said refrigerant leak based on the level of refrigerant in the collection chamber."

The harmful effects of refrigerant leakage are well documented. The Environmental Protection Agency in many states have issued regulations regarding leak detection and repair. For example, Section 608 of the Clean Air Act provides regulations for the inspection and repair of refrigeration systems to prevent leakage of refrigerant into the atmosphere. The claimed invention may be incorporated into a compliance program to comply with the Clean Air Act and other state regulations regarding leak detection and repair of refrigeration systems. Providing early detection of refrigerant leaks will thus avoid emissions that would otherwise harm the atmosphere.

Current leak detection devices available on the market are dependent upon detection of a gas analyzer to detects parts per million of refrigerant gas in the atmosphere. These systems work within a confined space of still air such that the leaked refrigerant can be sensed and calculated. In practice, the current leak detection devices are limited to use mechanical / equipment rooms. Thus, the current leak detection devices leave the majority of the air conditioning market without early detection, because neither the condensing unit nor the air handler sections (neither outdoor package equipment) are operating in confined still air environments. An advantage of the claimed invention over gas analyzers is that the claimed invention can detect leaks in an outdoor windy environment, where it would be impossible for a gas analyzer to pick up air concentrations.

The claimed invention can sense loss of refrigerant long before the environmental and energy consumption impact reaches its extensive potential. In general systems can lose 10% of their refrigerant charge capacity before the impact on system performance is noticed by the owners. The present invention thus enables early detection of refrigerant leakage.

The newly added claims are now more narrowly tailored to a system and method for detecting leakage of refrigerant in a refrigeration system. The claimed invention thus relates to device and corresponding method that contributes substantially to the reduction of greenhouse gas emissions. If further information is required, the reviewer is respectfully requested to contact the undersigned.

Respectfully submitted,

COATS & BENNETT, P.L.L.C.

Dated: February 28, 2011

David E. Bennett
Registration No.: 32,194

1400 Crescent Green, Suite 300
Cary, NC 27518

Telephone: (919) 854-1844
Facsimile: (919) 854-2084

UNITED STATES PATENT AND TRADEMARK OFFICE

UNITED STATES DEPARTMENT OF COMMERCE
United States Patent and Trademark Office
Address: COMMISSIONER FOR PATENTS
P.O. Box 1450
Alexandria, Virginia 22313-1450
www.uspto.gov

| APPLICATION NO. | FILING DATE | FIRST NAMED INVENTOR | ATTORNEY DOCKET NO. | CONFIRMATION NO. |
|---|---|---|---|---|
| 12/980,493 | 12/29/2010 | Michael Shelton | 6506-001 | 4791 |

24112 7590 03/07/2011
COATS & BENNETT, PLLC
1400 Crescent Green, Suite 300
Cary, NC 27518

| EXAMINER |
|---|

| ART UNIT | PAPER NUMBER |
|---|---|
| 3744 | |

| MAIL DATE | DELIVERY MODE |
|---|---|
| 03/07/2011 | PAPER |

**Please find below and/or attached an Office communication concerning this application or proceeding.**

The time period for reply, if any, is set in the attached communication.

UNITED STATES PATENT AND TRADEMARK OFFICE

Commissioner for Patents
United States Patent and Trademark Office
P.O. Box 1450
Alexandria, VA 22313-1450
www.uspto.gov

COATS & BENNETT, PLLC
1400 Crescent Green, Suite 300
Cary NC 27518

| | | |
|---|---|---|
| In re Application of | : | |
| SHELTON, MICHAEL | : | DECISION ON PETITION |
| Application No. 12/980,493 | : | TO MAKE SPECIAL UNDER |
| Filed: Dec. 29, 2010 | : | THE GREEN TECHNOLOGY |
| Attorney Docket No. 6506-001 | : | PILOT PROGRAM |

This is a decision on the renewed petition under 37 CFR 1.102, filed Feb. 28, 2011, to make the above-identified application special under the pilot program for applications pertaining to Green Technologies as set forth in 74 Federal Register Notice 64666 (December 8, 2009) and amended by 75 Federal Register Notice 28554 (May 21, 2010) and 75 Federal Register Notice 69049 (November 10, 2010).

The petition is **dismissed**.

If reconsideration of this decision is desired, a petition for reconsideration must be filed within ONE (1) MONTH OR THIRTY (30) DAYS from the mail date of this decision, whichever is longer. No extension of this time limit can be granted under 37 CFR 1.136(a) or (b). The petition for reconsideration should include an exhaustive attempt to provide the lacking item(s) noted below, since, after a decision on the petition for reconsideration, no further reconsideration or review of the matter will be undertaken by the Director.

A grantable petition to make an application special under 37 CFR 1.102 and the pilot program as set forth in 74 FR 64666 must be directed to a nonprovisional application filed under 35 USC 111(a) or be a national stage entry under 35 USC 371, exclusive of any reissue applications.

In order to qualify for special status, the following requirements must be met. 1) The application must have no more than 3 independent claims and no more than 20 total claims. 2) The application must not contain any multiple dependent claims. 3) The petition must state the basis for seeking special status, i.e., the claimed invention either: A) materially enhances the quality of the environment or B) materially contributes to: i) the discovery or development of renewable energy resources, ii) the more efficient utilization and conservation of energy resources, or iii) greenhouse gas emission reduction. 4) If the disclosure is not clear on its face that the claimed invention materially contributes under category (A) or (B), the petition must be accompanied by a statement by the applicant, assignee, or an attorney/agent registered to practice before the Office explaining how the materiality standard is met. 5) A statement that applicant will agree to

make an election without traverse in a telephonic interview if a restriction requirement is made by the examiner. 6) The petition to make special must be filed electronically. 7) The petition must be filed at least one day prior to the date that a first Office Action appears in the Patent Application Information Retrieval (PAIR) system. 8) The petition must be accompanied by a request for early publication in compliance with 37 CFR 1.219 and include the publication fee as set forth in 37 CFR 1.18(d).

The requirement for a fee for consideration of the petition to make special for applications pertaining to Green Technologies has been waived. The petition lacks Items #1 and # 4.

In regard to item 1, petitioner should note that a review of the application claims has been made for the purposes of determining the number of claims contained therein. This application contains more than 3 independent claims and/or more than 20 total claims. As set forth in the Notice, if the application contains more than 3 independent claims or more than 20 total claims, it will not be eligible to participate in the "Pilot Program for Green Technologies Including Greenhouse Gas Reduction." There are a total of 22 claims with 4 independent claims present.

In regard to item 4, petitioner should note that the instant petition includes a statement identifying the basis for the special status (i.e., whether the instant invention (1) materially enhances the quality of the environment or materially contributes to (2) development of renewable energy resources or energy conservation, or (3) greenhouse gas reduction) as required by sections II and III of the notice. However, as stated in the notice, applicant must also provide a statement pertaining to the materiality standard if the application disclosure is not clear on its face as to the materiality of the basis for the special status of the invention. This petition lacks such a statement and it is not agreed that the application on its face meets that materiality standard. In the renewed petition, petitioner indicates that the claimed invention relates to refrigerant leak detection which will reduce greenhouse gas emission. This is not convincing. For example, it is not clear how the claimed refrigerant monitoring system and detection of problems will provide and enhance the quality of the environment or contribute to energy conservation or greenhouse gas reduction. It is a common sense that a less efficient refrigeration system will not perform efficiently.

Any reconsideration of this decision should be submitted through the USPTO electronic filing system, EFS-Web, and selecting the document description of "Petition for Green Tech Pilot" on the EFS-Web screen.

Telephone inquiries concerning this decision should be directed to Henry C. Yuen at 571-272-4856. The application is being forwarded to the Technology Center Art Unit 3744 for action for claims as presented on Feb. 28, 2011 in its regular turn.

/Henry C. Yuen/

Henry C. Yuen
Quality Assurance Specialist
Technology Center 3700

IN THE UNITED STATES PATENT AND TRADEMARK OFFICE

| | | |
|---|---|---|
| In re Application of<br>**Shelton** | ) | |
| Serial No.: **12/980,493** | ) | PATENT PENDING |
| Filed: **December 29, 2010** | ) | Examiner: |
| For: **Chemical State Monitor for Refrigeration System** | ) | Group Art Unit: |
| Attorney's Docket No: **6506-001** | ) | Confirmation No.: 4791 |

Commissioner for Patents
P.O. Box 1450
Alexandria, VA 22313-1450

**CERTIFICATE OF MAILING OR TRANSMISSION [37 CFR 1.8(a)]**

I hereby certify that this correspondence is being:

☐ deposited with the United States Postal Service on the date shown below with sufficient postage as first class mail in an envelope addressed to: Commissioner for Patents, P.O. Box 1450, Alexandria, VA 22313-1450.

☐ transmitted by facsimile on the date shown below to the United States Patent and Trademark Office at (571) 273-8300.

April 6, 2011 — Kathleen Koppen
Date — Kathleen Koppen

This correspondence is being:

☒ electronically submitted via EFS-Web

## REQUEST FOR RECONSIDERATION OF PETITION TO MAKE SPECIAL UNDER THE GREEN TECHNOLOGY PILOT PROGRAM

In response to the decision dated March 7, 2011, Applicant has filed a Preliminary Amendment in the application to reduce the number of claims. The application now has a total of 19 claims and 3 independent claims. Additionally, applicant offers the following remarks showing how the invention can materially contribute to the improvement of the environment.

### BACKGROUND

Refrigerant gases, such as hydrochluorofluorocarbons (HCFCs) and hydrofluorocarbons (HFCs) are greenhouse gases that contribute significantly to global warming. (Turning up the Heat, pp. 5-7) (Ex. A); (Velder, pp. 3-5) (Exhibit D). The global warming potential (GWP) of HCFCs is typically thousands of times greater than $CO_2$. The GWP of $CO_2$ is 1, which is used as the standard measure. For comparison, GWP of HFC 404a is 3800 (Chilling Facts II, p. 5)

(Ex. B). The GWP of some HFC and HCFC may be as much as 10,000 times greater than $CO_2$ (Section 609, p. 1) (Ex. C); (Global Mitigation, p. I-4) (Exhibit F). Thus, HFCs have a far greater potential impact on global warming than the same amount of $CO_2$.

HFC and HCFC emissions into the atmosphere from refrigeration systems, i.e. refrigerant leaks, is a major problem contributing to global warming. (Global Mitigation, pp. IV-15 –IV-55). In the United States, HFC emissions are estimated to be approximately 148 million metric tons in 2010" (Global Mitigation, pp. IV-27). Worldwide, HFC emissions are estimated to be 356 million metric tons. (Id.). Air conditioners, heat pumps, and refrigeration systems can affect global warming through the release of refrigerants and insulation blowing agents directly into the atmosphere..." (Sand, p. 1). Supermarkets worldwide account for significant HCFC and HFC emissions. "These [supermarkets refrigeration] systems have historically used large refrigerant charges and experienced high leakage rates" (Sand, p. 8). For example, in Great Britain, reported emissions from supermarket refrigeration systems amount to the equivalent of 1.13 million tons of $CO_2$. (Chilling Facts II, p.3). Refrigerant leakages rates for supermarkets may be as high as 30 percent annually. Supermarkets account for 41% of HFC emissions in the United States and Japan. (Global Mitigation, pp. IV-26). The EPA also reports that refrigerant leakage from automobile air conditioning systems is a major problem. (Section 609, p. 1). Refrigerant leakage from motor vehicle air conditioning systems adds the equivalent of over 50 million metric tons of CO2 each year. (Section 609, p. 1). By 2020, it is estimated the global HFC emissions will be equivalent to between 2 billion and 2.6 billion tons of CO2 per year. (Chilling Facts II, p. 7) By 2050, the global HFC emissions are projected to be equivalent to approximately 5.5 to 8.8 billion tons of CO2. (Velders, p. 4)

Reducing leakage rates from refrigeration systems can significantly reduce the HFC emissions into the atmosphere. For example, the EPA estimates that reduction of HFC emissions from US supermarkets can reduce HFC emissions by 22 million metric tons. (Green Chill, p. 2) (Exhibit E). This reduction is equivalent to removing 4 million cars from the roads.

The Environmental Protection Agency (EPA) and many states have issued regulations regarding leak detection and repair. For example, Section 608 of the Clean Air Act provides regulations for the inspection and repair of refrigeration systems to prevent leakage of refrigerants into the atmosphere. Also, the EPA, and its equivalent in Great Britain, have a number of mitigation programs with the goal of reducing HFC and HCFC emissions into the atmosphere. The EPA partnership programs include the Green Chill Advanced Refrigeration Partnership Program to reduce emissions from supermarket systems (http://www.epa.gov/greenchill/) and the Motor Air Conditioning Climate Protection Partnership Program (http://www.epa.gov/cppd/mac/) to reduce emissions from vehicle air conditioning. These programs demonstrate the importance of reducing refrigerant emissions.

MATERIAL BENEFITS OF CLAIMED INVENTION

Mitigation programs for reducing emissions include early detection of refrigerant leaks before significant emissions have occurred. (Global Mitigation, p. IV-30). "Reducing leakage rates can significantly reduce HFC emissions, especially in systems such as chillers, cold storage warehouses, and retail food systems that can leak large amounts of refrigerant." (Global Mitigation, p. IV-30). One of the best methods for leak detection is an electronic leak detector. These types of detectors can detect a leak long before the leaks has a noticeable impact on system performance. Early identification of leaks is important because, as noted above, the release of refrigerant gases have a huge global warming impact. The claimed invention can materially contribute to the environment by providing a reliable and inexpensive method of leak detection. The lead detection apparatus can be produced at low cost, enabling widespread adoption and use. Further, the leak detection device is suitable for use in outdoor environments, where other leak detection devices are ineffective.

Current leak detection devices available on the market are dependent upon detection of a gas analyzer to detects parts per million of refrigerant gas in the atmosphere. These systems work within a confined space of still air such that the leaked refrigerant can be sensed and

calculated. In practice, the current leak detection devices are limited to use mechanical / equipment rooms. Thus, the current leak detection devices leave the majority of the air conditioning market without early detection, because neither the condensing unit nor the air handler sections (neither outdoor package equipment) are operating in confined still air environments. An advantage of the claimed invention over gas analyzers is that the claimed invention can detect leaks in an outdoor windy environment, where it would be impossible for a gas analyzer to pick up air concentrations.

The claimed invention can sense loss of refrigerant long before the environmental and energy consumption impact t reaches its extensive potential. In general systems can lose 10% of their refrigerant charge capacity before the impact on system performance is noticed by the owners. The present invention thus enables early detection of refrigerant leakage. Providing early detection of refrigerant leaks will thus avoid emissions that would otherwise harm the atmosphere.

Respectfully submitted,

COATS & BENNETT, P.L.L.C.

Dated: April 6, 2011

David E. Bennett
Registration No.: 32,194

1400 Crescent Green, Suite 300
Cary, NC 27518

Telephone: (919) 854-1844
Facsimile: (919) 854-2084

UNITED STATES PATENT AND TRADEMARK OFFICE

UNITED STATES DEPARTMENT OF COMMERCE
United States Patent and Trademark Office
Address: COMMISSIONER FOR PATENTS
P.O. Box 1450
Alexandria, Virginia 22313-1450
www.uspto.gov

| APPLICATION NO. | FILING DATE | FIRST NAMED INVENTOR | ATTORNEY DOCKET NO. | CONFIRMATION NO. |
|---|---|---|---|---|
| 12/980,493 | 12/29/2010 | Michael Shelton | 6506-001 | 4791 |

24112 7590 04/26/2011
COATS & BENNETT, PLLC
1400 Crescent Green, Suite 300
Cary, NC 27518

| EXAMINER |
|---|
| RAHIM, AZIM |

| ART UNIT | PAPER NUMBER |
|---|---|
| 3784 | |

| MAIL DATE | DELIVERY MODE |
|---|---|
| 04/26/2011 | PAPER |

**Please find below and/or attached an Office communication concerning this application or proceeding.**

The time period for reply, if any, is set in the attached communication.

UNITED STATES PATENT AND TRADEMARK OFFICE

Commissioner for Patents
United States Patent and Trademark Office
P.O. Box 1450
Alexandria, VA 22313-1450
www.uspto.gov

COATS & BENNETT, PLLC
1400 Crescent Green, Suite 300
Cary NC 27518

| | | |
|---|---|---|
| In re Application of | : | |
| SHELTON, MICHAEL | : | DECISION ON PETITION |
| Application No. 12/980,493 | : | TO MAKE SPECIAL UNDER |
| Filed: Dec. 29, 2010 | : | THE GREEN TECHNOLOGY |
| Attorney Docket No. 6506-001 | : | PILOT PROGRAM |

This is a decision on the renewed petition under 37 CFR 1.102, filed April 6. 2011, to make the above-identified application special under the pilot program for applications pertaining to Green Technologies as set forth in 74 Federal Register Notice 64666 (December 8, 2009) and amended by 75 Federal Register Notice 28554 (May 21, 2010) and 75 Federal Register Notice 69049 (November 10, 2010).

The petition is **granted**.

If reconsideration of this decision is desired, a petition for reconsideration must be filed within ONE (1) MONTH OR THIRTY (30) DAYS from the mail date of this decision, whichever is longer. No extension of this time limit can be granted under 37 CFR 1.136(a) or (b). The petition for reconsideration should include an exhaustive attempt to provide the lacking item(s) noted below, since, after a decision on the petition for reconsideration, no further reconsideration or review of the matter will be undertaken by the Director.

A grantable petition to make an application special under 37 CFR 1.102 and the pilot program as set forth in 74 FR 64666 must be directed to a nonprovisional application filed under 35 USC 111(a) or be a national stage entry under 35 USC 371, exclusive of any reissue applications.

In order to qualify for special status, the following requirements must be met. 1) The application must have no more than 3 independent claims and no more than 20 total claims. 2) The application must not contain any multiple dependent claims. 3) The petition must state the basis for seeking special status, i.e., the claimed invention either: A) materially enhances the quality of the environment or B) materially contributes to: i) the discovery or development of renewable energy resources, ii) the more efficient utilization and conservation of energy resources, or iii) greenhouse gas emission reduction. 4) If the disclosure is not clear on its face that the claimed invention materially contributes under category (A) or (B), the petition must be accompanied by a statement by the applicant, assignee, or an attorney/agent registered to practice before the Office explaining how the materiality standard is met. 5) A statement that applicant will agree to

make an election without traverse in a telephonic interview if a restriction requirement is made by the examiner. 6) The petition to make special must be filed electronically. 7) The petition must be filed at least one day prior to the date that a first Office Action appears in the Patent Application Information Retrieval (PAIR) system. 8) The petition must be accompanied by a request for early publication in compliance with 37 CFR 1.219 and include the publication fee as set forth in 37 CFR 1.18(d).

The requirement for a fee for consideration of the petition to make special for applications pertaining to Green Technologies has been waived.

The instant petition complies with items 1 – 8 above. Accordingly, the above-identified application has been accorded "special" status.

Telephone inquires concerning this decision should be directed to Henry C. Yuen at 571-272-4856.

This application will be forwarded to the Technology Center Art Unit 3744 for action on the merits commensurate with this decision.

/Henry C. Yuen/

Henry C. Yuen
Quality Assurance Specialist
Technology Center TC 3700

UNITED STATES PATENT AND TRADEMARK OFFICE

UNITED STATES DEPARTMENT OF COMMERCE
United States Patent and Trademark Office
Address: COMMISSIONER FOR PATENTS
P.O. Box 1450
Alexandria, Virginia 22313-1450
www.uspto.gov

| APPLICATION NO. | FILING DATE | FIRST NAMED INVENTOR | ATTORNEY DOCKET NO. | CONFIRMATION NO. |
|---|---|---|---|---|
| 12/980,576 | 12/29/2010 | Hiroshi Kanazawa | 104165.63186US | 4929 |

7590 03/15/2012
CROWELL & MORING LLP
INTELLECTUAL PROPERTY GROUP
P.O. BOX 14300
WASHINGTON, DC 20044-4300

| EXAMINER |
|---|
| LEUNG, QUYEN PHAN |

| ART UNIT | PAPER NUMBER |
|---|---|
| 2834 | |

| NOTIFICATION DATE | DELIVERY MODE |
|---|---|
| 03/15/2012 | ELECTRONIC |

## DECISION GRANTING PETITION UNDER 37 CFR 1.138(d)

*The declaration of express abandonment is recognized*

This is in response to the petition under 37 CFR 1.138(d), requesting for a refund of any previously paid search fee and excess claims fee in the above-identified application.

The petition is granted.

The express abandonment is recognized. Any previously paid search fee and excess claims fee are hereby refunded.

Telephone inquiries should be directed to the Office of Data Management at (571) 272-4200.

Mimi Jarnes

Patent Publication Branch
Office of Data Management



FORM PET651G (Rev. 08/07)

UNITED STATES PATENT AND TRADEMARK OFFICE

Commissioner for Patents
United States Patent and Trademark Office
P.O. Box 1450
Alexandria, VA 22313-1450
www.uspto.gov

In re Application of
LANNY L JOHNSON

Application No. 12980581

Filed:

Attorney Docket No. RXPT-014CIPCONa

:DECISION ON PETITION TO MAKE SPECIAL
:UNDER 37 CFR 1.102(c)(1)

This is a decision on the electronic petition under 37 CFR 1.102 (c)(1), filed 29-DEC-2010 to make the above-identified application special based on applicant's age as set forth in MPEP § 708.02, Section IV.

The petition is **GRANTED**.

A grantable petition to make an application special under 37 CFR 1.102(c)(1), MPEP § 708.02, Section IV: Applicant's Age must include a statement by applicant or a registered practitioner having evidence that applicant is at least 65 years of age. No fee is required.

Accordingly, the above-identified application has been accorded "special" status and will be taken up for action by the examiner upon the completion of all pre-examination processing.

Telephone inquiries concerning this electronic decision should be directed to the Electronic Business Center at 866-217-9197.

All other inquiries concerning either the examination or status of the application should be directed to the Technology Center.

UNITED STATES PATENT AND TRADEMARK OFFICE

Commissioner for Patents
United States Patent and Trademark Office
P.O. Box 1450

**HOLTZ, HOLTZ, GOODMAN & CHICK PC**
**220 Fifth Avenue**
**16TH Floor**
**NEW YORK NY 10001-7708**

**MAILED**

MAR 17 2011

**OFFICE OF PETITIONS**

| | | |
|---|---|---|
| In re Application of | : | |
| Moshe MELLER | : | DECISION ON PETITION |
| Application No. 12/980,589 | : | TO MAKE SPECIAL |
| Filed: December 29, 2010 | : | UNDER 37 CFR 1.102(c)(1) |
| Atty. Docket No.: 10600/LH | : | |

This is a decision on the petition under 37 CFR 1.102(c)(1), filed January 27, 2011, to make the above-identified application special based on applicant's age as set forth in MPEP section 708.02, section IV.

The petition is **GRANTED**.

A grantable petition to make an application special under 37 CFR 1.102(c)(1) and MPEP § 708.02, Section IV: Applicant's Age must be accompanied by evidence showing that at least one of the applicants is 65 years of age, or more, such as a birth certificate or a statement by applicant. No fee is required.

The instant petition includes the statement by Leonard Holtz that he is in possession of evidence that the inventor Moshe Meller's age is 65 years of age, or more. Mr. Holtz is a registered attorney with the Office. Accordingly, the above-identified application has been accorded "special" status.

Telephone inquiries concerning this decision should be directed to Robert DeWitty at 571-272-6051.

All other inquiries concerning either the examination or status of the application should be directed to the Technology Center.

The application is being forwarded to the Technology Center Art Unit 2834 for action on the merits commensurate with this decision.

Ramesh Krishnamurthy

for David Bucci
Petitions Examiner
Office of Petitions

UNITED STATES PATENT AND TRADEMARK OFFICE

Commissioner for Patents
United States Patent and Trademark Office
P.O. Box 1450
Alexandria, VA 22313-1450
www.uspto.gov

**ROGER H. CHU**
**19499 ERIC DRIVE**
**SARATOGA CA 95070**

MAILED
AUG 02 2011
OFFICE OF PETITIONS

| | | |
|---|---|---|
| In re Application of | : | |
| Charles C. Lee et al. | : | |
| Application No. 12/980,591 | : | DECISION ON PETITION |
| Filed: December 29, 2010 | : | |
| Attorney Docket No. STEI-009DIV1 | : | |

This is a decision on the petition under the unintentional provisions of 37 CFR 1.137(b), filed July 5, 2011, to revive the above-identified application.

The petition is **GRANTED**.

This application became abandoned for failure to timely pay the issue and/or publication fees on or before May 4, 2011, as required by the Notice of Allowance and Fee(s) Due, mailed February 4, 2011. Accordingly, the date of abandonment of this application is May 5, 2011.

The petition satisfies the requirements of 37 CFR 1.137(b) in that petitioner has supplied (1) the reply in the form of payment of the issue fee of $1,510 and the publication fee of $300, (2) the petition fee of $1,620, and (3) a proper statement of unintentional delay. Accordingly, the issue and publication fees are accepted as being unintentionally delayed.

Telephone inquiries concerning this decision should be directed to Kimberly Inabinet at (571) 272-4618.

This application is being referred to the Office of Data Management for further processing into a patent.

/Kimberly A. Inabinet/

Kimberly A. Inabinet
Petitions Examiner
Office of Petitions

Doc code : PET.OP.AGE
Description : Petition to make special based on Age/Health

PTO/SB/130 (07-09)
Approved for use through 07/31/2012. OMB 0651- 0031
U.S. Patent and Trademark Office; U.S. DEPARTMENT OF COMMERCE
Under the Paperwork Reduction Act of 1995, no persons are required to respond to a collection of information unless it contains a valid OMB control number

# PETITION TO MAKE SPECIAL BASED ON AGE FOR ADVANCEMENT OF EXAMINATION UNDER 37 CFR 1.102(c)(1)

## Application Information

| | | | | | |
|---|---|---|---|---|---|
| Application Number | 12/980,653 | Confirmation Number | 5077 | Filing Date | 2010-12-29 |
| Attorney Docket Number (optional) | GOW12CON-2 | Art Unit | | Examiner | |
| First Named Inventor | Mohan M. Vijay | | | | |
| Title of Invention | Ultrasonic Waterjet Apparatus | | | | |

**Attention: Office of Petitions**
An application may be made special for advancement of examination upon filing of a petition showing that the applicant is 65 years of age, or more. No fee is required with such a petition. See 37 CFR 1.102(c)(1) and MPEP 708.02 (IV).

APPLICANT HEREBY PETITIONS TO MAKE SPECIAL FOR ADVANCEMENT OF EXAMINATION IN THIS APPLICATION UNDER 37 CFR 1.102(c)(1) and MPEP 708.02 (IV) ON THE BASIS OF THE APPLICANT'S AGE.

A grantable petition requires one of the following items:
(1) Statement by one named inventor in the application that he/she is 65 years of age, or more; or
(2) Certification by a registered attorney/agent having evidence such as a birth certificate, passport, driver's license, etc. showing one named inventor in the application is 65 years of age, or more.

**Name of Inventor who is 65 years of age, or older**

| Given Name | Middle Name | Family Name | Suffix |
|---|---|---|---|
| Mohan | M. | Vijay | |

A signature of the applicant or representative is required in accordance with 37 CFR 1.33 and 10.18.
Please see 37 CFR 1.4(d) for the format of the signature.

Select (1) or (2) :

○ (1) I am an inventor in this application and I am 65 years of age, or more.

◉ (2) I am an attorney or agent registered to practice before the Patent and Trademark Office, and I certify that I am in possession of evidence, and will retain such in the application file record, showing that the inventor listed above is 65 years of age, or more.

| | | | |
|---|---|---|---|
| Signature | /David J. Hrina/ | Date (YYYY-MM-DD) | 2011-04-20 |
| Name | David J. Hrina | Registration Number | 50566 |

PTO/SB/130 (07-09)
Approved for use through 07/31/2012. OMB 0651- 0031
U.S. Patent and Trademark Office; U.S. DEPARTMENT OF COMMERCE
Under the Paperwork Reduction Act of 1995, no persons are required to respond to a collection of information unless it contains a valid OMB control number

# Privacy Act Statement

The Privacy Act of 1974 (P.L. 93-579) requires that you be given certain information in connection with your submission of the attached form related to a patent application or patent. Accordingly, pursuant to the requirements of the Act, please be advised that: (1) the general authority for the collection of this information is 35 U.S.C. 2(b)(2); (2) furnishing of the information solicited is voluntary; and (3) the principal purpose for which the information is used by the U.S. Patent and Trademark Office is to process and/or examine your submission related to a patent application or patent. If you do not furnish the requested information, the U.S. Patent and Trademark Office may not be able to process and/or examine your submission, which may result in termination of proceedings or abandonment of the application or expiration of the patent.

The information provided by you in this form will be subject to the following routine uses:

1. The information on this form will be treated confidentially to the extent allowed under the Freedom of Information Act (5 U.S.C. 552) and the Privacy Act (5 U.S.C. 552a). Records from this system of records may be disclosed to the Department of Justice to determine whether the Fr eedom of Information Act requires disclosure of these records.

2. A record from this system of records may be disclosed, as a routine use, in the course of presenting evidence to a court, magistrate, or administrative tribunal, including disclosures to opposing counsel in the course of settlement negotiations.

3. A record in this system of records may be disclosed, as a routine use, to a Member of Congress submitting a request involving an individual, to whom the record pertains, when the individual has requested assistance from the Member with respect to the subject matter of the record.

4. A record in this system of records may be disclosed, as a routine use, to a contractor of the Agency having need for the information in order to perform a contract. Recipients of information shall be required to comply with the requirements of the Privacy Act of 1974, as amended, pursuant to 5 U.S.C. 552a(m).

5. A record related to an International Application filed under the Patent Cooperation Treaty in this system of records may be disclosed, as a routine use, to the International Bureau of the World Intellectual Property Organization, pursuant to the Patent Cooperation Treaty.

6. A record in this system of records may be disclosed, as a routine use, to another federal agency for purposes of National Security review (35 U.S.C. 181) and for review pursuant to the Atomic Energy Act (42 U.S.C. 218(c)).

7. A record from this system of records may be disclosed, as a routine use, to the Administrator, General Services, or his/her designee, during an inspection of records conducted by GSA as part of that agency's responsibility to recommend improvements in records management practices and programs, under authority of 44 U.S.C. 2904 and 2906. Such disclosure shall be made in accordance with the GSA regulations governing inspection of records for this purpose, and any other relevant (i.e., GSA or Commerce) directive. Such disclosure shall not be used to make determinations about indivi duals.

8. A record from this system of records may be disclosed, as a routine use, to the public after either publication of the application pursuant to 35 U.S.C. 122(b) or issuance of a patent pursuant to 35 U.S.C. 151. Further, a record may be disclosed, subject to the limitations of 37 CFR 1.14, as a routine use, to the public if the record was filed in an application which became abandoned or in which the proceedings were terminated and which application is referenced by either a published application, an application open to public inspections or an issued patent.

9. A record from this system of records may be disclosed, as a routine use, to a Federal, State, or local law enforcement agency, if the USPTO becomes aware of a violation or potential violation of law or regulation.

UNITED STATES PATENT AND TRADEMARK OFFICE

Commissioner for Patents
United States Patent and Trademark Office
P.O. Box 1450
Alexandria, VA 22313-1450
www.uspto.gov

In re Application of
Mohan M. Vijay

Application No. 12980653

Filed: December 29,2010

Attorney Docket No. GOW-12CON-2

:DECISION ON PETITION TO MAKE SPECIAL
:UNDER 37 CFR 1.102(c)(1)

This is a decision on the electronic petition under 37 CFR 1.102 (c)(1), filed 20-APR-2011 to make the above-identified application special based on applicant's age as set forth in MPEP § 708.02, Section IV.

The petition is **GRANTED**.

A grantable petition to make an application special under 37 CFR 1.102(c)(1), MPEP § 708.02, Section IV: Applicant's Age must include a statement by applicant or a registered practitioner having evidence that applicant is at least 65 years of age. No fee is required.

Accordingly, the above-identified application has been accorded "special" status and will be taken up for action by the examiner upon the completion of all pre-examination processing.

Telephone inquiries concerning this electronic decision should be directed to the Electronic Business Center at 866-217-9197.

All other inquiries concerning either the examination or status of the application should be directed to the Technology Center.

UNITED STATES PATENT AND TRADEMARK OFFICE

Commissioner for Patents
United States Patent and Trademark Office
P.O. Box 1450
Alexandria, VA 22313-1450
www.uspto.gov

INTERNATIONAL PAPER COMPANY
6285 TRI-RIDGE BOULEVARD
LOVELAND, OH 45140

**MAILED**

MAY 11 2011

**OFFICE OF PETITIONS**

| | | |
|---|---|---|
| In re Application of | : | |
| Haidar Canfora Zein, et. al. | : | |
| Application No. 12/980,676 | : | DECISION GRANTING STATUS |
| Filed: December 29, 2010 | : | UNDER 37 CFR 1.47(a) |
| Attorney Docket No. COM-04298-US | : | |

This is in response to the petition under 37 CFR 1.47(a), filed April 19, 2011.

The petition is **GRANTED**.

Petitioner has shown that the non-signing inventor refuses to join in the filing of the above-identified application.

The application and papers have been reviewed and found in compliance with 37 CFR 1.47(a). This application is hereby accorded Rule 1.47(a) status.

As provided in 37 CFR 1.47(c), this Office will forward notice of this application's filing to the non-signing inventor at the address given in the petition. Notice of the filing of this application will also be published in the Official Gazette.

Telephone inquiries regarding this decision should be directed to the undersigned at (571) 272-3226.

Andrea Smith
Petitions Examiner
Office of Petitions

UNITED STATES PATENT AND TRADEMARK OFFICE

Commissioner for Patents
United States Patent and Trademark Office
P.O. Box 1450
Alexandria, VA 22313-1450
www.uspto.gov

Haidar Canfora Zein
Rua dos Sabias
56 – Parque dos Passaros – Sao Bernardo do Campo
Sao Paulo
**BRAZIL**

**MAILED**
MAY 11 2011
**OFFICE OF PETITIONS**

In re Application of
Haidar Canfora Zein, et. al.
Application No. 12/980,676
Filed: December 29, 2010
For: THREE-LAYER WRAPPING AND A PROCESS FOR MANUFACTURING A PACKAGING USING THE SAME

Dear Mr. Zein:

You are named as a joint inventor in the above-identified United States patent application, filed under the provisions of 35 U.S.C. 116 (United States Code), and 37 CFR 1.47(a), Rules of Practice in Patent Cases. Should a patent be granted on the application you will be designated therein as a joint inventor.

As a named inventor you are entitled to inspect any paper in the file wrapper of the application, order copies of all or any part thereof (at a prepaid cost per 37 CFR 1.19) or make your position of record in the application. Alternatively, you may arrange to do any of the preceding through a registered patent attorney or agent presenting written authorization from you. If you care to join the application, counsel of record (see below) would presumably assist you. Joining the application would entail the filing of an appropriate oath or declaration by you pursuant to 37 CFR 1.63.

Telephone inquiries regarding this communication should be directed to the undersigned at (571) 272-3226. Requests for information regarding your application should be directed to the File Information Unit at (703) 308-2733. Information regarding how to pay for and order a copy of the application, or a specific paper in the application, should be directed to the Certification Division at (571) 272-3150 or 1 (800) 972-6382 (outside the Washington, DC area).

Andrea Smith
Petitions Examiner
Office of Petitions

cc: INTERNATIONAL PAPER COMPANY
6285 TRI-RIDGE BOULEVARD
LOVELAND, OH 45140

**Doc Code: PET.GREEN**
**Document Description: Petition for Green Tech Pilot**

PTO/SB/420 (03-11)

# PETITION TO MAKE SPECIAL UNDER THE GREEN TECHNOLOGY PILOT PROGRAM

| Attorney Docket Number: TWAR-01004US0 | Application Number (if known): 12/980,693 | Filing date: December 29, 2010 |
|---|---|---|

First Named Inventor: Thomas A. Ward

Title: SOLAR PANEL CHARGING SYSTEM FOR ELECTRIC VEHICLE THAT CHARGES INDIVIDUAL BATTERIES WITH DIRECT PARALLEL CONNECTIONS TO SOLAR PANELS

**APPLICANT HEREBY REQUESTS TO PARTICIPATE IN THE GREEN TECHNOLOGY PILOT PROGRAM FOR THE ABOVE-IDENTIFIED APPLICATION. See Instruction Sheet on page 2.**

This petition must be timely filed electronically using the USPTO electronic filing system, EFS-Web.

1. By filing this petition:

   **Applicant is requesting early publication: Applicant hereby requests early publication under 37 CFR 1.219 and the publication fee set forth in 37 CFR 1.18(d) accompanies this request.**

2. By filing this petition: applicant is agreeing to make an election without traverse in a telephonic interview and elect an invention that meets the eligibility requirements for the Green Technology Pilot Program, if the Office determines that the claims are not obviously directed to a single invention. See Instruction Sheet.

3. This request is accompanied by statements of special status for the eligibility requirement.

4. The application contains no more than three (3) independent claims and twenty (20) total claims.

5. The application does not contain any multiple dependent claims.

6. Other attachments: _____

| Signature /Thomas A. Ward/ | Date July 7, 2011 |
|---|---|
| Name (Print/Typed) Thomas A. Ward | Registration Number 35,732 |

***Note:*** *Signatures of all the inventors or assignees of record of the entire interest or their representative(s) are required in accordance with 37 CFR 1.33 and 11.18. Please see 37 CFR 1.4(d) for the form of the signature. If necessary, submit multiple forms for more than one signature, see below*.*

☐ *Total of 1 forms are submitted.

*If you need assistance in completing the form, call 1-800-PTO-9199 and select option 2.*

# Instruction Sheet for
# Petition to Make Special Under the Green Technology Pilot Program

(Not to be Submitted to the USPTO)

***The following is a summary of the requirements (for more information see the notices (i) "Pilot Program for Green Technologies Including Greenhouse Gas Reduction," (ii) "Elimination of Classification Requirement in the Green Technology Pilot Program," and (iii) "Expansion and Extension of the Green Technology Pilot Program," available on the USPTO web site at http://www.uspto.gov/patents/init_events/green_tech.jsp):***

(1) The application must be a non-reissue, non-provisional utility application filed under 35 U.S.C. 111(a), or an international application that has entered the national stage in compliance with 35 U.S.C. 371, irrespective of the filing date of the application. Reexamination proceedings are excluded from this pilot program.

(2) The application must contain three or fewer independent claims and twenty or fewer total claims. The application must not contain any multiple dependent claims. For an application that contains more than three independent claims or twenty total claims, or multiple dependent claims, applicant must file a preliminary amendment in compliance with 37 CFR 1.121 to cancel the excess claims and/or the multiple dependent claims at the time the petition to make special is filed.

(3) The claims must be directed to a single invention that materially enhances the quality of the environment, or that materially contributes to: (1) the discovery or development of renewable energy resources; (2) the more efficient utilization and conservation of energy resources; or (3) green house gas emission reduction (see the eligibility requirements of sections II and III of the notice (i) cited above). The petition must include a statement that, if the USPTO determines that the claims are directed to multiple inventions (e.g., in a restriction requirement), applicant will agree to make an election without traverse in a telephonic interview, and elect an invention that meets the eligibility requirements in section II or III of the notice (i) cited above.

(4) The petition to make special must be timely filed electronically using the USPTO electronic filing system, EFS-Web, and selecting the document description of "Petition for Green Tech Pilot" on the EFS-Web screen. Applicant should use form PTO/SB/420, which is available as a Portable Document Format (PDF) fillable form in EFS-Web and on the USPTO Web site.

(5) The petition to make special must be filed at least one day prior to the date that a first Office action (which may be an Office action containing only a restriction requirement) appears in the Patent Application Information Retrieval (PAIR) system. Applicant may check the status of the application using PAIR.

(6) The petition to make special must be accompanied by a request for early publication in compliance with 37 CFR 1.219 and the publication fee set forth in 37 CFR 1.18(d).

# Privacy Act Statement

The **Privacy Act of 1974 (P.L. 93-579)** requires that you be given certain information in connection with your submission of the attached form related to a patent application or patent. Accordingly, pursuant to the requirements of the Act, please be advised that: (1) the general authority for the collection of this information is 35 U.S.C. 2(b)(2); (2) furnishing of the information solicited is voluntary; and (3) the principal purpose for which the information is used by the U.S. Patent and Trademark Office is to process and/or examine your submission related to a patent application or patent. If you do not furnish the requested information, the U.S. Patent and Trademark Office may not be able to process and/or examine your submission, which may result in termination of proceedings or abandonment of the application or expiration of the patent.

The information provided by you in this form will be subject to the following routine uses:

1. The information on this form will be treated confidentially to the extent allowed under the Freedom of Information Act (5 U.S.C. 552) and the Privacy Act (5 U.S.C 552a). Records from this system of records may be disclosed to the Department of Justice to determine whether disclosure of these records is required by the Freedom of Information Act.
2. A record from this system of records may be disclosed, as a routine use, in the course of presenting evidence to a court, magistrate, or administrative tribunal, including disclosures to opposing counsel in the course of settlement negotiations.
3. A record in this system of records may be disclosed, as a routine use, to a Member of Congress submitting a request involving an individual, to whom the record pertains, when the individual has requested assistance from the Member with respect to the subject matter of the record.
4. A record in this system of records may be disclosed, as a routine use, to a contractor of the Agency having need for the information in order to perform a contract. Recipients of information shall be required to comply with the requirements of the Privacy Act of 1974, as amended, pursuant to 5 U.S.C. 552a(m).
5. A record related to an International Application filed under the Patent Cooperation Treaty in this system of records may be disclosed, as a routine use, to the International Bureau of the World Intellectual Property Organization, pursuant to the Patent Cooperation Treaty.
6. A record in this system of records may be disclosed, as a routine use, to another federal agency for purposes of National Security review (35 U.S.C. 181) and for review pursuant to the Atomic Energy Act (42 U.S.C. 218(c)).
7. A record from this system of records may be disclosed, as a routine use, to the Administrator, General Services, or his/her designee, during an inspection of records conducted by GSA as part of that agency's responsibility to recommend improvements in records management practices and programs, under authority of 44 U.S.C. 2904 and 2906. Such disclosure shall be made in accordance with the GSA regulations governing inspection of records for this purpose, and any other relevant (*i.e.*, GSA or Commerce) directive. Such disclosure shall not be used to make determinations about individuals.
8. A record from this system of records may be disclosed, as a routine use, to the public after either publication of the application pursuant to 35 U.S.C. 122(b) or issuance of a patent pursuant to 35 U.S.C. 151. Further, a record may be disclosed, subject to the limitations of 37 CFR 1.14, as a routine use, to the public if the record was filed in an application which became abandoned or in which the proceedings were terminated and which application is referenced by either a published application, an application open to public inspection or an issued patent.
9. A record from this system of records may be disclosed, as a routine use, to a Federal, State, or local law enforcement agency, if the USPTO becomes aware of a violation or potential violation of law or regulation.

UNITED STATES PATENT AND TRADEMARK OFFICE

UNITED STATES DEPARTMENT OF COMMERCE
United States Patent and Trademark Office
Address: COMMISSIONER FOR PATENTS
P.O. Box 1450
Alexandria, Virginia 22313-1450
www.uspto.gov

| APPLICATION NO. | FILING DATE | FIRST NAMED INVENTOR | ATTORNEY DOCKET NO. | CONFIRMATION NO. |
|---|---|---|---|---|
| 12/980,693 | 12/29/2010 | Thomas A. Ward | TWAR-01004US0 | 5155 |

23910 7590 07/29/2011
FLIESLER MEYER LLP
650 CALIFORNIA STREET
14TH FLOOR
SAN FRANCISCO, CA 94108

| EXAMINER |
|---|
| ASSOUAD, PATRICK J |

| ART UNIT | PAPER NUMBER |
|---|---|
| 2858 | |

| NOTIFICATION DATE | DELIVERY MODE |
|---|---|
| 07/29/2011 | ELECTRONIC |

**Please find below and/or attached an Office communication concerning this application or proceeding.**

The time period for reply, if any, is set in the attached communication.

Notice of the Office communication was sent electronically on above-indicated "Notification Date" to the following e-mail address(es):

OFFICEACTIONS@FDML.COM

UNITED STATES PATENT AND TRADEMARK OFFICE

Commissioner for Patents
United States Patent and Trademark Office
P.O. Box 1450
Alexandria, VA 22313-1450
www.uspto.gov

FLIESLER MEYER LLP
650 CALIFORNIA STREET
14TH FLOOR
SAN FRANCISCO CA 94108

| | | |
|---|---|---|
| In re Application of | : | |
| Thomas A. WARD | : | DECISION ON PETITION |
| Application No. 12/980,693 | : | TO MAKE SPECIAL UNDER |
| Filed: December 29, 2010 | : | THE GREEN TECHNOLOGY |
| Attorney Docket No. TWAR-01004US0 | : | PILOT PROGRAM |

This is a decision on the petition under 37 CFR 1.102, filed on July 07, 2011, to make the above-identified application special under the pilot program for applications pertaining to Green Technologies as set forth 74 Federal Register Notice 64666 (December 8, 2009) and amended by 75 Federal Register Notice 28554 (May 21, 2010) and 75 Federal Register Notice 69049 (November 10, 2010).

The petition is **GRANTED**.

A grantable petition to make an application special under 37 CFR 1.102 and the pilot program as set forth in 74 FR 64666 must be directed to a nonprovisional application filed under 35 USC 111(a) or be a national stage entry under 35 USC 371, exclusive of any reissue applications.

In order to qualify for special status, the following requirements must be met. 1) The application must have no more than 3 independent claims and no more than 20 total claims. 2) The application must not contain any multiple dependent claims. 3) The petition must state the basis for seeking special status, i.e., the claimed invention either: A) materially enhances the quality of the environment or B) materially contributes to: i) the discovery or development of renewable energy resources, ii) the more efficient utilization and conservation of energy resources, or iii) greenhouse gas emission reduction. 4) If the disclosure is not clear on its face that the claimed invention materially contributes under category (A) or (B), the petition must be accompanied by a statement by the applicant, assignee, or an attorney/agent registered to practice before the Office explaining how the materiality standard is met. 5) A statement that applicant will agree to make an election without traverse in a telephonic interview if a restriction requirement is made by the examiner. 6) The petition to make special must be filed electronically. 7) The petition must be filed at least one day prior to the date that a first Office Action appears in the Patent Application Information Retrieval (PAIR) system. 8) The petition must be accompanied by a request for early publication in compliance with 37 CFR 1.219 and include the publication fee as set forth in 37 CFR 1.18(d).

The requirement for a fee for consideration of the petition to make special for applications pertaining to Green Technologies has been waived.

The instant petition complies with items 1 – 8 above. Accordingly, the above-identified application has been accorded "special" status.

Telephone inquires concerning this decision should be directed to Colleen Dunn at 571-272-1170.

The application is being forwarded to the appropriate Technology Center Art Unit for action on the merits commensurate with this decision.

Colleen Dunn
Quality Assurance Specialist
Technology Center 2800

**Certificate of Electronic Transmission**

I hereby certify that this correspondence is being electronically transmitted to the U.S. Patent and Trademark Office via EFS-WEB on December 29, 2010.

/William R. Allen/ December 29, 2010
William R. Allen, Ph.D. Reg. No, 48,389 Date

**IN THE UNITED STATES PATENT AND TRADEMARK OFFICE**

| | |
|---|---|
| Applicants: | Mohamed Haj-Maharsi et al. |
| Serial No.: | 12/980,700 |
| Filed: | December 29, 2010 |
| Group Art Unit: | Unknown |
| Examiner: | Unknown |
| Confirmation No.: | 5172 |
| Title: | REACTIVE POWER MANAGEMENT FOR WIND POWER PLANT INTERNAL GRID |
| Attorney Docket: | VWS-231US |

Cincinnati, Ohio 45202 December 29, 2010

Commissioner for Patents
P.O. Box 1450
Alexandria, VA 22313-1450

**STATEMENT OF SPECIAL STATUS FOR ELIGIBILITY UNDER THE GREEN TECHNOLOGY PILOT PROGRAM**

Sir:

Applicant hereby submits a statement to support Applicant's petition for the Green Technology Pilot Program, which is filed on even date herewith. The Applicant seeks special status because the invention disclosed and claimed in the present application materially enhances the quality of the environment by contributing to the restoration or maintenance of the basic life-sustaining natural elements. The materiality standard is satisfied because the claimed invention materially enhances the quality of the environment by contributing to the restoration or maintenance of one of the basic life-sustaining natural elements and/or the claimed invention

materially contributes to development of renewable energy or energy conservation and greenhouse gas emission reduction. Specifically, the claimed invention relates to wind turbines that operate using a renewable natural resource (wind) rather than fossil fuels and, more specifically, to methods and systems for registering events in a wind power system having several data processors. Wind turbine operation without the consumption of fossil fuels enhances the quality of the environment, contributes to the development of renewable energy, and reduces greenhouse gas emission.

Early and favorable consideration of Applicant's petition and this claims contained in this application are respectfully requested.

Applicant does not believe any fees are due in connection with filing this communication other than the publication fee. If, however, any fees are necessary as a result of this communication, the Commissioner is hereby authorized to charge any under-payment or fees associated with this communication or credit any over-payment to Deposit Account No. 23-3000.

Respectfully submitted,

WOOD, HERRON & EVANS, L.L.P.

/William R. Allen/
William R. Allen, Ph.D.
Reg. No, 48,389

2700 Carew Tower
441 Vine Street
Cincinnati, OH 45202
(513) 241-2324 (voice)
(513) 421-7269 (facsimile)
wallen@whepatent.com

**Doc Code: PET.GREEN**
**Document Description: Petition for Green Tech Pilot**

PTO/SB/420 (11-10)
Approved for use through 01/31/2011. OMB 0651-0062
U.S. Patent and Trademark Office; U. S. DEPARTMENT OF COMMERCE
Under the Paperwork Reduction Act of 1995, no persons are required to respond to a collection of information unless it displays a valid OMB control number.

# PETITION TO MAKE SPECIAL UNDER THE GREEN TECHNOLOGY PILOT PROGRAM

| | | |
|---|---|---|
| Attorney Docket Number: VWS-231US | Application Number (if known): 12/980,700 | Filing date: December 29, 2010 |
| First Named Inventor: Mohamed Haj-Maharsi | | |
| Title: REACTIVE POWER MANAGEMENT FOR WIND POWER PLANT INTERNAL GRID | | |

**APPLICANT HEREBY REQUESTS TO PARTICIPATE IN THE GREEN TECHNOLOGY PILOT PROGRAM FOR THE ABOVE-IDENTIFIED APPLICATION. See Instruction Sheet on page 2.**

This petition must be timely filed electronically using the USPTO electronic filing system, EFS-Web.

1. By filing this petition:

   **Applicant is requesting early publication: Applicant hereby requests early publication under 37 CFR 1.219 and the publication fee set forth in 37 CFR 1.18(d) accompanies this request.**

2. By filing this petition: applicant is agreeing to make an election without traverse in a telephonic interview and elect an invention that meets the eligibility requirements for the Green Technology Pilot Program, if the Office determines that the claims are not obviously directed to a single invention. See Instruction Sheet.

3. This request is accompanied by statements of special status for the eligibility requirement.

4. The application contains no more than three (3) independent claims and twenty (20) total claims.

5. The application does not contain any multiple dependent claims.

6. Other attachments: _____

| | |
|---|---|
| Signature /William R. Allen/ | Date 12-29-2010 |
| Name (Print/Typed) William R. Allen | Registration Number 48,389 |

***Note:*** *Signatures of all the inventors or assignees of record of the entire interest or their representative(s) are required in accordance with 37 CFR 1.33 and 11.18. Please see 37 CFR 1.4(d) for the form of the signature. If necessary, submit multiple forms for more than one signature see below*.*

☒ *Total of 1 forms are submitted.

The information is required to obtain or retain a benefit by the public which is to file (and by the USPTO to process) an application. Confidentiality is governed by 35 U.S.C. 122 and 37 CFR 1.11 and 1.14. This collection is estimated to take 12 hours to complete, including gathering, preparing, and submitting the completed application form to the USPTO. Time will vary depending upon the individual case. Any comments on the amount of time you require to complete this form and/or suggestions for reducing this burden, should be sent to the Chief Information Officer, U.S. Patent and Trademark Office, U.S. Department of Commerce, P.O. Box 1450, Alexandria, VA 22313-1450. DO NOT SEND FEES OR COMPLETED FORMS TO THIS ADDRESS. **SEND TO: Commissioner for Patents, P.O. Box 1450, Alexandria, VA 22313-1450.**

*If you need assistance in completing the form, call 1-800-PTO-9199 and select option 2.*

Under the Paperwork Reduction Act of 1995, no persons are required to respond to a collection of information unless it displays a valid OMB control number.

# Instruction Sheet for Petition to Make Special Under the Green Technology Pilot Program

(Not to be Submitted to the USPTO)

**The following is a summary of the requirements (for more information see the notices (i) "Pilot Program for Green Technologies Including Greenhouse Gas Reduction," (ii) "Elimination of Classification Requirement in the Green Technology Pilot Program," and (iii) "Expansion and Extension of the Green Technology Pilot Program," available on the USPTO web site at http://www.uspto.gov/patents/init_events/green_tech.jsp):**

1) The application must be a non-reissue, non-provisional utility application filed under 35 U.S.C. 111 (a), or an international application that has entered the national stage in compliance with 35 U.S.C. 371, irrespective of the filing date of the application. Reexamination proceedings are excluded from this pilot program.

2) The application must contain three or fewer independent claims and twenty or fewer total claims. The application must not contain any multiple dependent claims. For an application that contains more than three independent claims or twenty total claims, or multiple dependent claims, applicant must file a preliminary amendment in compliance with 37 CFR 1.121 to cancel the excess claims and/or the multiple dependent claims at the time the petition to make special is filed.

3) The claims must be directed to a single invention that materially enhances the quality of the environment, or that materially contributes to: (1) the discovery or development of renewable energy resources; (2) the more efficient utilization and conservation of energy resources; or (3) green house gas emission reduction (see the eligibility requirements of sections II and III of the notice (i) cited above). The petition must include a statement that, if the USPTO determines that the claims are directed to multiple inventions (e.g., in a restriction requirement), applicant will agree to make an election without traverse in a telephonic interview, and elect an invention that meets the eligibility requirements in section II or III of the notice (i) cited above.

4) The petition to make special must be timely filed electronically using the USPTO electronic filing system, EFS-Web, and selecting the document description of "Petition for Green Tech Pilot" on the EFS-Web screen. Applicant should use form PTO/SB/420, which is available as a Portable Document Format (PDF) fillable form in EFS-Web and on the USPTO Web site.

5) The petition to make special must be filed at least one day prior to the date that a first Office action (which may be an Office action containing only a restriction requirement) appears in the Patent Application Information Retrieval (PAIR) system. Applicant may check the status of the application using PAIR.

6) The petition to make special must be accompanied by a request for early publication in compliance with 37 CFR 1.219 and the publication fee set forth in 37 CFR 1.18(d).

## Privacy Act Statement

The **Privacy Act of 1974 (P.L. 93-579)** requires that you be given certain information in connection with your submission of the attached form related to a patent application or patent. Accordingly, pursuant to the requirements of the Act, please be advised that: (1) the general authority for the collection of this information is 35 U.S.C. 2(b)(2); (2) furnishing of the information solicited is voluntary; and (3) the principal purpose for which the information is used by the U.S. Patent and Trademark Office is to process and/or examine your submission related to a patent application or patent. If you do not furnish the requested information, the U.S. Patent and Trademark Office may not be able to process and/or examine your submission, which may result in termination of proceedings or abandonment of the application or expiration of the patent.

The information provided by you in this form will be subject to the following routine uses:

1. The information on this form will be treated confidentially to the extent allowed under the Freedom of Information Act (5 U.S.C. 552) and the Privacy Act (5 U.S.C 552a). Records from this system of records may be disclosed to the Department of Justice to determine whether disclosure of these records is required by the Freedom of Information Act.
2. A record from this system of records may be disclosed, as a routine use, in the course of presenting evidence to a court, magistrate, or administrative tribunal, including disclosures to opposing counsel in the course of settlement negotiations.
3. A record in this system of records may be disclosed, as a routine use, to a Member of Congress submitting a request involving an individual, to whom the record pertains, when the individual has requested assistance from the Member with respect to the subject matter of the record.
4. A record in this system of records may be disclosed, as a routine use, to a contractor of the Agency having need for the information in order to perform a contract. Recipients of information shall be required to comply with the requirements of the Privacy Act of 1974, as amended, pursuant to 5 U.S.C. 552a(m).
5. A record related to an International Application filed under the Patent Cooperation Treaty in this system of records may be disclosed, as a routine use, to the International Bureau of the World Intellectual Property Organization, pursuant to the Patent Cooperation Treaty.
6. A record in this system of records may be disclosed, as a routine use, to another federal agency for purposes of National Security review (35 U.S.C. 181) and for review pursuant to the Atomic Energy Act (42 U.S.C. 218(c)).
7. A record from this system of records may be disclosed, as a routine use, to the Administrator, General Services, or his/her designee, during an inspection of records conducted by GSA as part of that agency's responsibility to recommend improvements in records management practices and programs, under authority of 44 U.S.C. 2904 and 2906. Such disclosure shall be made in accordance with the GSA regulations governing inspection of records for this purpose, and any other relevant (*i.e.*, GSA or Commerce) directive. Such disclosure shall not be used to make determinations about individuals.
8. A record from this system of records may be disclosed, as a routine use, to the public after either publication of the application pursuant to 35 U.S.C. 122(b) or issuance of a patent pursuant to 35 U.S.C. 151. Further, a record may be disclosed, subject to the limitations of 37 CFR 1.14, as a routine use, to the public if the record was filed in an application which became abandoned or in which the proceedings were terminated and which application is referenced by either a published application, an application open to public inspection or an issued patent.
9. A record from this system of records may be disclosed, as a routine use, to a Federal, State, or local law enforcement agency, if the USPTO becomes aware of a violation or potential violation of law or regulation.

UNITED STATES PATENT AND TRADEMARK OFFICE

UNITED STATES DEPARTMENT OF COMMERCE
United States Patent and Trademark Office
Address: COMMISSIONER FOR PATENTS
P.O. Box 1450
Alexandria, Virginia 22313-1450
www.uspto.gov

| APPLICATION NO. | FILING DATE | FIRST NAMED INVENTOR | ATTORNEY DOCKET NO. | CONFIRMATION NO. |
|---|---|---|---|---|
| 12/980,700 | 12/29/2010 | Mohamed Haj-Maharsi | VWS-231US | 5172 |

26875 7590 04/21/2011
WOOD, HERRON & EVANS, LLP
2700 CAREW TOWER
441 VINE STREET
CINCINNATI, OH 45202

| EXAMINER | |
|---|---|
| ART UNIT | PAPER NUMBER |
| 2839 | |

| MAIL DATE | DELIVERY MODE |
|---|---|
| 04/21/2011 | PAPER |

**Please find below and/or attached an Office communication concerning this application or proceeding.**

The time period for reply, if any, is set in the attached communication.

UNITED STATES PATENT AND TRADEMARK OFFICE

Commissioner for Patents
United States Patent and Trademark Office
P.O. Box 1450
Alexandria, VA 22313-1450
www.uspto.gov

WOOD, HERRON & EVANS, LLP
2700 CAREW TOWER
441 VINE STREET
CINCINNATI OH 45202

| | | |
|---|---|---|
| In re Application of | : | |
| HAJ-MAHARSI et al. | : | DECISION ON PETITION |
| Application No. 12/980,700 | : | TO MAKE SPECIAL UNDER |
| Filed: December 29, 2010 | : | THE GREEN TECHNOLOGY |
| Attorney Docket No. VWS-231US | : | PILOT PROGRAM |

This is a decision on the petition under 37 CFR 1.102, filed on December 29, 2010, to make the above-identified application special under the pilot program for applications pertaining to Green Technologies as set forth 74 Federal Register Notice 64666 (December 8, 2009) and amended by 75 Federal Register Notice 28554 (May 21, 2010) and 75 Federal Register Notice 69049 (November 10, 2010).

The petition is **GRANTED**.

A grantable petition to make an application special under 37 CFR 1.102 and the pilot program as set forth in 74 FR 64666 must be directed to a nonprovisional application filed under 35 USC 111(a) or be a national stage entry under 35 USC 371, exclusive of any reissue applications.

In order to qualify for special status, the following requirements must be met. 1) The application must have no more than 3 independent claims and no more than 20 total claims. 2) The application must not contain any multiple dependent claims. 3) The petition must state the basis for seeking special status, i.e., the claimed invention either: A) materially enhances the quality of the environment or B) materially contributes to: i) the discovery or development of renewable energy resources, ii) the more efficient utilization and conservation of energy resources, or iii) greenhouse gas emission reduction. 4) If the disclosure is not clear on its face that the claimed invention materially contributes under category (A) or (B), the petition must be accompanied by a statement by the applicant, assignee, or an attorney/agent registered to practice before the Office explaining how the materiality standard is met. 5) A statement that applicant will agree to make an election without traverse in a telephonic interview if a restriction requirement is made by the examiner. 6) The petition to make special must be filed electronically. 7) The petition must be filed at least one day prior to the date that a first Office Action appears in the Patent Application Information Retrieval (PAIR) system. 8) The petition must be accompanied by a request for early publication in compliance with 37 CFR 1.219 and include the publication fee as set forth in 37 CFR 1.18(d).

The requirement for a fee for consideration of the petition to make special for applications pertaining to Green Technologies has been waived.

The instant petition complies with items 1 – 8 above. Accordingly, the above-identified application has been accorded "special" status.

Telephone inquires concerning this decision should be directed to Lee W. Young at 571-272-4549.

The application is being forwarded to the Technology Center Art Unit 2839 for action on the merits commensurate with this decision.

Lee W. Young
Quality Assurance Specialist
Technology Center 2800

**Certificate of Electronic Transmission**

I hereby certify that this correspondence is being electronically transmitted to the U.S. Patent and Trademark Office via EFS-WEB on December 29, 2010.

/William R. Allen/ December 29, 2010
William R. Allen, Ph.D. Reg. No, 48,389 Date

**IN THE UNITED STATES PATENT AND TRADEMARK OFFICE**

| | |
|---|---|
| Applicants: | Wallace Lafferty et al. |
| Serial No.: | 12/980,704 |
| Filed: | December 29, 2010 |
| Group Art Unit: | Unknown |
| Examiner: | Unknown |
| Confirmation No.: | 5179 |
| Title: | Control Network for Wind Turbine Park |
| Attorney Docket: | VWS-232US |

Cincinnati, Ohio 45202 December 29, 2010

Commissioner for Patents
P.O. Box 1450
Alexandria, VA 22313-1450

**STATEMENT OF SPECIAL STATUS FOR ELIGIBILITY UNDER THE GREEN TECHNOLOGY PILOT PROGRAM**

Sir:

Applicant hereby submits a statement to support Applicant's petition for the Green Technology Pilot Program, which is filed on even date herewith. The Applicant seeks special status because the invention disclosed and claimed in the present application materially enhances the quality of the environment by contributing to the restoration or maintenance of the basic life-sustaining natural elements. The materiality standard is satisfied because the claimed invention materially enhances the quality of the environment by contributing to the restoration or maintenance of one of the basic life-sustaining natural elements and/or the claimed invention

materially contributes to development of renewable energy or energy conservation and greenhouse gas emission reduction. Specifically, the claimed invention relates to wind turbines that operate using a renewable natural resource (wind) rather than fossil fuels and, more specifically, to methods and systems for registering events in a wind power system having several data processors. Wind turbine operation without the consumption of fossil fuels enhances the quality of the environment, contributes to the development of renewable energy, and reduces greenhouse gas emission.

Early and favorable consideration of Applicant's petition and this claims contained in this application are respectfully requested.

Applicant does not believe any fees are due in connection with filing this communication other than the publication fee. If, however, any fees are necessary as a result of this communication, the Commissioner is hereby authorized to charge any under-payment or fees associated with this communication or credit any over-payment to Deposit Account No. 23-3000.

Respectfully submitted,

WOOD, HERRON & EVANS, L.L.P.

/William R. Allen/
William R. Allen, Ph.D.
Reg. No, 48,389

2700 Carew Tower
441 Vine Street
Cincinnati, OH 45202
(513) 241-2324 (voice)
(513) 421-7269 (facsimile)
wallen@whepatent.com

**Doc Code: PET.GREEN**
**Document Description: Petition for Green Tech Pilot**

PTO/SB/420 (05-10)
Approved for use through 05/31/2010. OMB 0651-0062
U.S. Patent and Trademark Office; U. S. DEPARTMENT OF COMMERCE
Under the Paperwork Reduction Act of 1995, no persons are required to respond to a collection of information unless it displays a valid OMB control number.

# PETITION TO MAKE SPECIAL UNDER THE GREEN TECHNOLOGY PILOT PROGRAM

| Attorney Docket Number: VWS-232US | Application Number (if known): 12/980,704 | Filing date: 29-DEC-2010 |
|---|---|---|

First Named Inventor: Wallace Lafferty

Title: Control Network for Wind Turbine Park

**APPLICANT HEREBY REQUESTS TO PARTICIPATE IN THE GREEN TECHNOLOGY PILOT PROGRAM FOR THE ABOVE-IDENTIFIED APPLICATION. See Instruction Sheet on page 2.**

This petition must be timely filed electronically using the USPTO electronic filing system, EFS-Web.

1. By filing this petition:

   **Applicant is requesting early publication: Applicant hereby requests early publication under 37 CFR 1.219 and the publication fee set forth in 37 CFR 1.18(d) accompanies this request.**

2. By filing this petition: applicant is agreeing to make an election without traverse in a telephonic interview and elect an invention that meets the eligibility requirements set forth in the notice titled "Pilot Program for Green Technologies Including Greenhouse Gas Reduction," as modified by the notice titled "Elimination of Classification Requirement in the Green Technology Pilot Program," each of which was published in the Federal Register, if the Office determines that the claims are not obviously directed to a single invention.

3. This request is accompanied by statements of special status for the eligibility requirement.

4. The application contains no more than three (3) independent claims and twenty (20) total claims.

5. The application does not contain any multiple dependent claims.

6. Other attachments: _____

| Signature /William R. Allen/ | Date 29-DEC-2010 |
|---|---|
| Name (Print/Typed) William R. Allen | Registration Number 48389 |

***Note**: Signatures of all the inventors or assignees of record of the entire interest or their representative(s) are required in accordance with 37 CFR 1.33 and 11.18. Please see 37 CFR 1.4(d) for the form of the signature. If necessary, submit multiple forms for more than one signature, see below*.*

☑ *Total of 1 forms are submitted.

The information is required to obtain or retain a benefit by the public which is to file (and by the USPTO to process) an application. Confidentiality is governed by 35 U.S.C. 122 and 37 CFR 1.11 and 1.14. This collection is estimated to take 12 hours to complete, including gathering, preparing, and submitting the completed application form to the USPTO. Time will vary depending upon the individual case. Any comments on the amount of time you require to complete this form and/or suggestions for reducing this burden, should be sent to the Chief Information Officer, U.S. Patent and Trademark Office, U.S. Department of Commerce, P.O. Box 1450, Alexandria, VA 22313-1450. DO NOT SEND FEES OR COMPLETED FORMS TO THIS ADDRESS. **SEND TO: Commissioner for Patents, P.O. Box 1450, Alexandria, VA 22313-1450.**

*If you need assistance in completing the form, call 1-800-PTO-9199 and select option 2.*

Under the Paperwork Reduction Act of 1995, no persons are required to respond to a collection of information unless it displays a valid OMB control number.

# Instruction Sheet for Petition to Make Special Under the Green Technology Pilot Program

(Not to be Submitted to the USPTO)

***The following is a summary of the requirements (for more information see the notices (i) "Pilot Program for Green Technologies Including Greenhouse Gas Reduction" and (ii) "Elimination of Classification Requirement in the Green Technology Pilot Program," available on the USPTO web site at http://www.uspto.gov/patents/init_events/green_tech.jsp):***

(1) The application must be a non-reissue, non-provisional utility application filed under 35 U.S.C. 111(a), or an international application that has entered the national stage in compliance with 35 U.S.C. 371. The application must be previously filed before the publication date of the notice cited above. Reexamination proceedings are excluded from this pilot program.

(2) The application must contain three or fewer independent claims and twenty or fewer total claims. The application must not contain any multiple dependent claims. For an application that contains more than three independent claims or twenty total claims, or multiple dependent claims, applicant must file a preliminary amendment in compliance with 37 CFR 1.121 to cancel the excess claims and/or the multiple dependent claims at the time the petition to make special is filed.

(3) The claims must be directed to a single invention that materially enhances the quality of the environment, or that materially contributes to: (1) the discovery or development of renewable energy resources; (2) the more efficient utilization and conservation of energy resources; or (3) green house gas emission reduction (see the eligibility requirements of sections II and III of the notice (i) cited above). The petition must include a statement that, if the USPTO determines that the claims are directed to multiple inventions (e.g., in a restriction requirement), applicant will agree to make an election without traverse in a telephonic interview, and elect an invention that meets the eligibility requirements in section II or III of the notice (i) cited above.

(4) The petition to make special must be timely filed electronically using the USPTO electronic filing system, EFS-Web, and selecting the document description of "Petition for Green Tech Pilot" on the EFS-Web screen. Applicant should use form PTO/SB/420, which is available as a Portable Document Format (PDF) fillable form in EFS-Web and on the USPTO Web site.

(5) The petition to make special must be filed at least one day prior to the date that a first Office action (which may be an Office action containing only a restriction requirement) appears in the Patent Application Information Retrieval (PAIR) system. Applicant may check the status of the application using PAIR.

(6) The petition to make special must be accompanied by a request for early publication in compliance with 37 CFR 1.219 and the publication fee set forth in 37 CFR 1.18(d).

# Privacy Act Statement

The **Privacy Act of 1974 (P.L. 93-579)** requires that you be given certain information in connection with your submission of the attached form related to a patent application or patent. Accordingly, pursuant to the requirements of the Act, please be advised that: (1) the general authority for the collection of this information is 35 U.S.C. 2(b)(2); (2) furnishing of the information solicited is voluntary; and (3) the principal purpose for which the information is used by the U.S. Patent and Trademark Office is to process and/or examine your submission related to a patent application or patent. If you do not furnish the requested information, the U.S. Patent and Trademark Office may not be able to process and/or examine your submission, which may result in termination of proceedings or abandonment of the application or expiration of the patent.

The information provided by you in this form will be subject to the following routine uses:

1. The information on this form will be treated confidentially to the extent allowed under the Freedom of Information Act (5 U.S.C. 552) and the Privacy Act (5 U.S.C 552a). Records from this system of records may be disclosed to the Department of Justice to determine whether disclosure of these records is required by the Freedom of Information Act.
2. A record from this system of records may be disclosed, as a routine use, in the course of presenting evidence to a court, magistrate, or administrative tribunal, including disclosures to opposing counsel in the course of settlement negotiations.
3. A record in this system of records may be disclosed, as a routine use, to a Member of Congress submitting a request involving an individual, to whom the record pertains, when the individual has requested assistance from the Member with respect to the subject matter of the record.
4. A record in this system of records may be disclosed, as a routine use, to a contractor of the Agency having need for the information in order to perform a contract. Recipients of information shall be required to comply with the requirements of the Privacy Act of 1974, as amended, pursuant to 5 U.S.C. 552a(m).
5. A record related to an International Application filed under the Patent Cooperation Treaty in this system of records may be disclosed, as a routine use, to the International Bureau of the World Intellectual Property Organization, pursuant to the Patent Cooperation Treaty.
6. A record in this system of records may be disclosed, as a routine use, to another federal agency for purposes of National Security review (35 U.S.C. 181) and for review pursuant to the Atomic Energy Act (42 U.S.C. 218(c)).
7. A record from this system of records may be disclosed, as a routine use, to the Administrator, General Services, or his/her designee, during an inspection of records conducted by GSA as part of that agency's responsibility to recommend improvements in records management practices and programs, under authority of 44 U.S.C. 2904 and 2906. Such disclosure shall be made in accordance with the GSA regulations governing inspection of records for this purpose, and any other relevant (*i.e.*, GSA or Commerce) directive. Such disclosure shall not be used to make determinations about individuals.
8. A record from this system of records may be disclosed, as a routine use, to the public after either publication of the application pursuant to 35 U.S.C. 122(b) or issuance of a patent pursuant to 35 U.S.C. 151. Further, a record may be disclosed, subject to the limitations of 37 CFR 1.14, as a routine use, to the public if the record was filed in an application which became abandoned or in which the proceedings were terminated and which application is referenced by either a published application, an application open to public inspection or an issued patent.
9. A record from this system of records may be disclosed, as a routine use, to a Federal, State, or local law enforcement agency, if the USPTO becomes aware of a violation or potential violation of law or regulation.

UNITED STATES PATENT AND TRADEMARK OFFICE

UNITED STATES DEPARTMENT OF COMMERCE
United States Patent and Trademark Office
Address: COMMISSIONER FOR PATENTS
P.O. Box 1450
Alexandria, Virginia 22313-1450
www.uspto.gov

| APPLICATION NO. | FILING DATE | FIRST NAMED INVENTOR | ATTORNEY DOCKET NO. | CONFIRMATION NO. |
|---|---|---|---|---|
| 12/980,704 | 12/29/2010 | Wallace Lafferty | VWS-232US | 5179 |

83583 7590 05/05/2011
Wood, Herron & Evans, LLP (Vestas Wind Systems)
441 Vine Street
2700 Carew Tower
Cincinnati, OH 45202

| EXAMINER |
|---|

| ART UNIT | PAPER NUMBER |
|---|---|
| 2839 | |

| NOTIFICATION DATE | DELIVERY MODE |
|---|---|
| 05/05/2011 | ELECTRONIC |

**Please find below and/or attached an Office communication concerning this application or proceeding.**

The time period for reply, if any, is set in the attached communication.

Notice of the Office communication was sent electronically on above-indicated "Notification Date" to the following e-mail address(es):

amalik@whepatent.com
eobrien@whepatent.com
USPTODOCK@whepatent.com

UNITED STATES PATENT AND TRADEMARK OFFICE

Commissioner for Patents
United States Patent and Trademark Office
P.O. Box 1450
Alexandria, VA 22313-1450
www.uspto.gov

Wood, Herron & Evans, LLP (Vestas Wind Systems)
441 Vine Street
2700 Carew Tower
Cincinnati OH 45202

| | | |
|---|---|---|
| In re Application of | : | |
| LAFFERTY et al. | : | DECISION ON PETITION |
| Application No. 12/980,704 | : | TO MAKE SPECIAL UNDER |
| Filed: December 29, 2010 | : | THE GREEN TECHNOLOGY |
| Attorney Docket No. VWS-232US | : | PILOT PROGRAM |

This is a decision on the petition under 37 CFR 1.102, filed on December 29, 2010, to make the above-identified application special under the pilot program for applications pertaining to Green Technologies as set forth 74 Federal Register Notice 64666 (December 8, 2009) and amended by 75 Federal Register Notice 28554 (May 21, 2010) and 75 Federal Register Notice 69049 (November 10, 2010).

The petition is **DISMISSED**.

If reconsideration of this decision is desired, a petition for reconsideration must be filed within ONE (1) MONTH OR THIRTY (30) DAYS from the mail date of this decision, whichever is longer. No extension of this time limit can be granted under 37 CFR 1.136(a) or (b). The petition for reconsideration should include an exhaustive attempt to provide the lacking item(s) noted below, since, after a decision on the petition for reconsideration, no further reconsideration or review of the matter will be undertaken by the Director.

A grantable petition to make an application special under 37 CFR 1.102 and the pilot program as set forth in 74 FR 64666 must be directed to a nonprovisional application filed under 35 USC 111(a) or be a national stage entry under 35 USC 371, exclusive of any reissue applications and be filed prior to the date of the notice, December 8, 2009.

In order to qualify for special status, the following requirements must be met. 1) The application must have no more than 3 independent claims and no more than 20 total claims. 2) The application must not contain any multiple dependent claims. 3) The petition must state the basis for seeking special status, i.e., the claimed invention either: A) materially enhances the quality of the environment or B) materially contributes to: i) the discovery or development of renewable energy resources, ii) the more efficient utilization and conservation of energy resources, or iii) greenhouse gas emission reduction. 4) If the disclosure is not clear on its face that the claimed invention materially contributes under category (A) or (B), the petition must be accompanied by a statement by the applicant, assignee, or an attorney/agent registered to practice before the

Office explaining how the materiality standard is met. 5) A statement that applicant will agree to make an election without traverse in a telephonic interview if a restriction requirement is made by the examiner. 6) The petition to make special must be filed electronically. 7) The petition must be filed at least one day prior to the date that a first Office Action appears in the Patent Application Information Retrieval (PAIR) system. 8) The petition must be accompanied by a request for early publication in compliance with 37 CFR 1.219 and include the publication fee as set forth in 37 CFR 1.18(d).

The requirement for a fee for consideration of the petition to make special for applications pertaining to Green Technologies has been waived.

The petition lacks item 1

In regard to item 1, the application has more than 3 independent claims and more than 20 total claims.

Any reconsideration of this decision should be submitted through the USPTO electronic filing system, EFS-Web, and selecting the document description of "Petition for Green Tech Pilot" on the EFS-Web screen.

Telephone inquiries concerning this decision should be directed to Lee W. Young at 571-272-4549.

The application is being forwarded to the Technology Center Art Unit 2839 for action in its regular turn.

Lee W. Young
Quality Assurance Specialist
Technology Center 2800

**CERTIFICATE OF ELECTRONIC TRANSMISSION**

I hereby certify that this correspondence for Application No. 12/980,704 is being electronically transmitted to Technology Center 2839 via EFS-WEB, on May 24, 2011

/William R. Allen/ May 24, 2011
William R. Allen, Reg. No. 48,389 Date

**IN THE UNITED STATES PATENT AND TRADEMARK OFFICE**

| | |
|---|---|
| Applicant: | Wallace Lafferty et al. |
| Serial No: | 12/980,704 |
| Filing Date: | 12-29-2010 |
| Art Unit: | 2839 |
| Examiner: | Unknown |
| Title: | Control Network for Wind Turbine Park |
| Conf. No.: | 5179 |
| Atty Docket: | VWS-232US |

Cincinnati, Ohio 45202 May 24, 2011

REQUEST FOR RECONSIDERATION OF DECISION ON PETITION TO MAKE SPECIAL UNDER THE GREEN TECHNOLOGY PILOT PROGRAM

Mail Stop Office of Petitions
Commissioner for Patents
P.O. Box 1450
Alexandria, VA 22313-1450

Sir:

This communication is in timely response to the Decision on Petition from the United States Patent and Trademark Office ("USPTO") dated May 5, 2011 that dismissed the Applicant's December 29, 2010 Petition to make special under the Green Technology Pilot Program ("Green Technology Petition"). The Green Technology Petition was dismissed because of the presence of more than 3 independent claims and 20 total claims. The Applicant has amended the claims in the accompanying Preliminary Amendment filed on even date herewith to comply with the requirement that the application have no more than 3 independent claims and 20

total claims. Because the remaining unsatisfied requirement is now satisfied, the Applicant submits that the Green Technology Petition now fully satisfies the requirements set forth in 74 Federal Register Notice 64666 (December 8, 2009) and amended by 75 Federal Register Notice 28554 (May 21, 2010) and 75 Federal Register Notice 69049 (November 10, 2010). Accordingly, the Applicant respectfully requests reconsideration of the Decision on Petition and that the Examiner grant the Applicant's Green Technology Petition.

The Applicant does not believe any fees are due in connection with filing this communication. If, however, any fees are necessary as a result of this communication, the Commissioner is hereby authorized to charge any under-payment or fees associated with this communication or credit any over-payment to Deposit Account No. 23-3000.

Respectfully submitted,

WOOD, HERRON & EVANS, L.L.P.

/William R. Allen/
William R. Allen - Reg. No. 48,389
2700 Carew Tower, 441 Vine Street
Cincinnati, OH 45202
(513) 241-2324

UNITED STATES PATENT AND TRADEMARK OFFICE

UNITED STATES DEPARTMENT OF COMMERCE
United States Patent and Trademark Office
Address: COMMISSIONER FOR PATENTS
P.O. Box 1450
Alexandria, Virginia 22313-1450
www.uspto.gov

| APPLICATION NO. | FILING DATE | FIRST NAMED INVENTOR | ATTORNEY DOCKET NO. | CONFIRMATION NO. |
|---|---|---|---|---|
| 12/980,704 | 12/29/2010 | Wallace Lafferty | VWS-232US | 5179 |

83583 7590 06/01/2011
Wood, Herron & Evans, LLP (Vestas Wind Systems)
441 Vine Street
2700 Carew Tower
Cincinnati, OH 45202

| EXAMINER |
|---|

| ART UNIT | PAPER NUMBER |
|---|---|
| 2839 | |

| NOTIFICATION DATE | DELIVERY MODE |
|---|---|
| 06/01/2011 | ELECTRONIC |

**Please find below and/or attached an Office communication concerning this application or proceeding.**

The time period for reply, if any, is set in the attached communication.

Notice of the Office communication was sent electronically on above-indicated "Notification Date" to the following e-mail address(es):

amalik@whepatent.com
eobrien@whepatent.com
USPTODOCK@whepatent.com

UNITED STATES PATENT AND TRADEMARK OFFICE

Commissioner for Patents
United States Patent and Trademark Office
P.O. Box 1450
Alexandria, VA 22313-1450
www.uspto.gov

Wood, Herron & Evans, LLP (Vestas Wind Systems)
441 Vine Street
2700 Carew Tower
Cincinnati OH 45202

| | | |
|---|---|---|
| In re Application of | : | |
| LAFFERTY et al. | : | DECISION ON PETITION |
| Application No. 12/980,704 | : | TO MAKE SPECIAL UNDER |
| Filed: December 29, 2010 | : | THE GREEN TECHNOLOGY |
| Attorney Docket No. VWS-232US | : | PILOT PROGRAM |

This is a decision on the petition under 37 CFR 1.102, filed on December 29, 2010 and renewed on May 24, 2011, to make the above-identified application special under the pilot program for applications pertaining to Green Technologies as set forth 74 Federal Register Notice 64666 (December 8, 2009) and amended by 75 Federal Register Notice 28554 (May 21, 2010) and 75 Federal Register Notice 69049 (November 10, 2010).

The petition is **GRANTED**.

A grantable petition to make an application special under 37 CFR 1.102 and the pilot program as set forth in 74 FR 64666 must be directed to a nonprovisional application filed under 35 USC 111(a) or be a national stage entry under 35 USC 371, exclusive of any reissue applications.

In order to qualify for special status, the following requirements must be met. 1) The application must have no more than 3 independent claims and no more than 20 total claims. 2) The application must not contain any multiple dependent claims. 3) The petition must state the basis for seeking special status, i.e., the claimed invention either: A) materially enhances the quality of the environment or B) materially contributes to: i) the discovery or development of renewable energy resources, ii) the more efficient utilization and conservation of energy resources, or iii) greenhouse gas emission reduction. 4) If the disclosure is not clear on its face that the claimed invention materially contributes under category (A) or (B), the petition must be accompanied by a statement by the applicant, assignee, or an attorney/agent registered to practice before the Office explaining how the materiality standard is met. 5) A statement that applicant will agree to make an election without traverse in a telephonic interview if a restriction requirement is made by the examiner. 6) The petition to make special must be filed electronically. 7) The petition must be filed at least one day prior to the date that a first Office Action appears in the Patent Application Information Retrieval (PAIR) system. 8) The petition must be accompanied by a request for early publication in compliance with 37 CFR 1.219 and include the publication fee as set forth in 37 CFR 1.18(d).

The requirement for a fee for consideration of the petition to make special for applications pertaining to Green Technologies has been waived.

The instant petition complies with items 1 – 8 above. Accordingly, the above-identified application has been accorded "special" status.

Telephone inquires concerning this decision should be directed to Lee W. Young at 571-272-4549.

The application is being forwarded to the Technology Center Art Unit 2839 for action on the merits commensurate with this decision.

Lee W. Young
Quality Assurance Specialist
Technology Center 2800

UNITED STATES PATENT AND TRADEMARK OFFICE

Commissioner for Patents
United States Patent and Trademark Office
P.O. Box 1450
Alexandria, VA 22313-1450
www.uspto.gov

OLIVE LAW GROUP, PLLC
125 EDINBURGH SOUTH DRIVE, SUITE 100
CARY, NC 27511

Mail Date: March 29, 2011

| | |
|---|---|
| In re Application of: Dorozenski et al.<br>Application No.: 12/980782<br>Filed: December 29, 2010<br>Title: METHODS AND SYSTEMS FOR POWER GENERATION BY CHANGING DENSITY OF A FLUID | DECISION ON PETITION TO MAKE SPECIAL FOR NEW APPLICATION UNDER 37 C.F.R. § 1.102 & M.P.E.P. § 708.02 |

This is a decision on the petition filed on December 29, 2010 to make the above-identified application special for accelerated examination procedure under 37 C.F.R. § 1.102(d).

The petition to make the application special is **DISMISSED**.

REGULATION AND PRACTICE

A grantable petition to make special under 37 C.F.R. § 1.102(d) and pursuant to the "Change to Practice for Petitions in Patent Applications to Make Special and for Accelerated Examination" published in the Federal Register on June 26, 2006 (71 Fed. Reg. 36323), must satisfy the following conditions:

I. Conditions Regarding the Application:

1. the application must be a non-reissue utility or design application filed under 37 CFR 1.111(a);
2. the application, the petition and the required fees must be filed electronically using the USPTO's electronic filing system (EFS), or EFS-web; if not filed electronically, a statement asserting that EFS and EFS-web were not available during the normal business hours.
3. at the time of filing, the application must be complete under 37 CFR 1.51 and in condition for examination;
4. the application must contain three or fewer independent claims and twenty or fewer total claims and the claims must be directed to a single invention.

II. Conditions Regarding the Petition:

The petition must:

1. be filed with the application;
2. include a statement that applicant agrees not to separately argue the patentability of any independent claim during any appeal in the application;

3. include a statement that applicant agrees to make an election without traverse in a telephone interview.

4. include a statement that applicant agrees to conduct such an interview when requested by the examiner.

5. include a statement, made based on a good faith belief, that a preexamination search in compliance with the following requirements, was conducted, including an identification of the field of search by United States class and subclass, where applicable, and for database searches, the search logic or chemical structure or sequence used as a query, the name of the file(s) searched and the database service, and the date of the search.

The preexamination search must:

5.1 involve U.S. patents and patent application publications, foreign patent documents, and non-patent literature, unless the applicant can justify with reasonable certainty that no references more pertinent than those already identified are likely to be found in the eliminated sources and includes such a justification with this statement;

5.2. be directed to the claimed invention and encompass all of the features of the claims, giving the claims the broadest reasonable interpretation;

5.3. encompass the disclosed features that may be claimed.

6. must provide in support of the petition an accelerated examination support document. An accelerated examination support document must include:

6.1. an information disclosure statement (IDS) in compliance with 37 CFR 1.98 citing each reference deemed most closely related to the subject matter of each of the claims;

6.2. an identification of all the limitations in the claims that are disclosed by the reference specifying where the limitation is disclosed in the cited reference;

6.3. a detailed explanation of how each of the claims are patentable over the references cited with particularity required by 37 CFR 1.111(b) and (c);

6.4. a concise statement of the utility of the invention as defined in each of the independent claims (unless the application is a design application);

6.5. a showing of where each limitation of the claims finds support under 35 U.S.C. 112, first paragraph, in the written description of the specification. If applicable, the showing must also identify: (1) each means- (or step) plus-function claim element that invokes consideration under 35 U.S.C. 112, sixth paragraph; and (2) the structure, material, or acts in the specification that corresponds to each means- (or step) plus-function claim element that invokes consideration under 35 U.S.C. 112, sixth paragraph; if the application claims the benefit of one or more applications under title 35, United States Code, the showing must also include where each limitation of the claims finds support under 35 U.S.C. 112, first paragraph, in each such application in which such supports exists;

6.6. an identification of any cited references that may be disqualified under 35 U.S.C. 103(c).

## REVIEW OF FACTS

The conditions I:1-4, II: 1-5, 5.3, 6, 6.1, 6.2 and 6.6 above are considered to have been met. However, the petition fails to comply with conditions II : 5.1, 5.2, 6.3, 6.4 and 6.5 above.

Therefore, the petition fails to meet the required conditions to be accorded special status under the accelerated examination procedure.

**Discussion**

When referring to "the petition" hereinbelow, the received papers under consideration include the PTO/SB/28 form, the "pre-examination search document"; the "accelerated examination support document", and an Information Disclosure Statement including form PTO/SB/08A.

Regarding the requirements of section II element 5.1 and 5.2 outlined above, it appears the search outlined in the petition omitted a critical search area by not searching in class 290 subclasses 42.

With respect to the requirements of section II element 6.3 outlined above, the petition fails to provide a detailed explanation of how each of the claims are patentable over (each of) the reference(s) with particularity required by 37 CFR 1.111(b) and (c). Petitioners should be specific in their explanation and include the identification of specific claim limitations that support their position, where appropriate. Petitioners must distinguish each claim from each piece of prior art cited. General statements that the claims are neither anticipated nor rendered obvious by the cited references or that the references are not properly combinable will not be acceptable. The Office cannot infer or guess what petitioner believes the differences between the claims and the teachings of the prior art to be. Petitioner's statements must also be consistent and must be related to the claim language. In the instant petition, the discussion of independent claims 1 and 9 do not point out the specific claim limitations that make the claims patentable since petitioner does not refer to the exact language in the claims. Since the language of claims 1 and 9 is not identical, it appears these claims should be discussed separately. Additionally, the dependent claims are not clearly discussed as whether the claims support separate patentability should the independent be found to be unpatentable. The reference to section 9(b) does not provide this as that section identifies claim limitations in the references which may or may not provide patentability. It also not does indicate how the claims are patentable over all the references as a whole. A statement that the dependent claims are allowable because the independent claims are patentable is not sufficient. This does not provide guidance to the examiner as to whether the limitations could provide patentability should the examiner find the independent claims unpatentable.

Regarding the requirements of section II element 6.4 outlined above, the petition fails to identify a concise statement of the utility of the invention as defined in each of the independent claims. A general statement directed to the overall concept of the invention is not specifically relating the utility to each of the independent claims as is required by the policy. Petitioner should reference the independent claims specifically when discussing the utility of the invention.

Regarding the requirements of section II element 6.5 outlined above, the requirements of this section are not met. A grantable petition requires petitioner to provide a showing of where <u>each limitation</u> of the claims finds support under 35 U.S.C. 112, first paragraph, in the written description of the specification. If applicable, the showing must also identify: (1) each means- (or step) plus-function claim element that invokes consideration under 35 U.S.C. 112, sixth

paragraph; and (2) the structure, material, or acts in the specification that corresponds to each means- (or step) plus-function claim element that invokes consideration under 35 U.S.C. 112, sixth paragraph; if the application claims the benefit of one or more applications under title 35, United States Code, the showing must also include where each limitation of the claims finds support under 35 U.S.C. 112, first paragraph, in each such application in which such supports exists. In the instant petition, the showing of support for the current application does not point out where the limitations are found in the specification as no paragraph numbers have been used specifically pointing to the appropriate sections in the specification. In addition, 35 U.S.C. 112 first paragraph support has not been provided for provisional applications, 61/290663, 61/290671, and 61/393211 as required. Also, petitioner has not identified each means (or step) plus-function claim element. If there are none, a statement to such must be made.

## DECISION

For the above-stated reasons, the petition is **dismissed**. The application will therefore be taken up by the examiner for action in its regular turn.

Petitioner is given a single opportunity to perfect the petition. Any request for reconsideration of this decision must be submitted within 1 (one) month or 30 (thirty) days, whichever is longer, (no extension of time under 37 CFR 1.136(a)) from the date of this decision in order to be considered timely. Any request for reconsideration must address all of the deficiencies indicated above.

Petitioner is reminded that, upon granting of the special status of the application on request for reconsideration, the application will be processed expeditiously. However, due to the dismissal of the instant petition, examination may not be completed within twelve months of the filing date of the application.

Any inquiry regarding this decision should be directed to Linda J. Sholl, TC 3700 Special Programs Examiner, at (571) 272-4391.

/Linda J. Sholl/
Linda J. Sholl
Special Programs Examiner
Technology Center 3700

Doc code : PET.OP.AGE
Description : Petition to make special based on Age/Health

PTO/SB/130 (07-09)
Approved for use through 07/31/2012. OMB 0651- 0031
U.S. Patent and Trademark Office; U.S. DEPARTMENT OF COMMERCE
Under the Paperwork Reduction Act of 1995, no persons are required to respond to a collection of information unless it contains a valid OMB control number

# PETITION TO MAKE SPECIAL BASED ON AGE FOR ADVANCEMENT OF EXAMINATION UNDER 37 CFR 1.102(c)(1)

## Application Information

| | | | | | |
|---|---|---|---|---|---|
| Application Number | 12/980,782 | Confirmation Number | 5328 | Filing Date | 2010-12-29 |
| Attorney Docket Number (optional) | 146/2 UTIL | Art Unit | 3748 | Examiner | Nguyen, Hoang M |
| First Named Inventor | Stephen Dorozenski | | | | |
| Title of Invention | Methods and Systems for Power Generation By Changing Density of A Fluid | | | | |

**Attention: Office of Petitions**
An application may be made special for advancement of examination upon filing of a petition showing that the applicant is 65 years of age, or more. No fee is required with such a petition. See 37 CFR 1.102(c)(1) and MPEP 708.02 (IV).

APPLICANT HEREBY PETITIONS TO MAKE SPECIAL FOR ADVANCEMENT OF EXAMINATION IN THIS APPLICATION UNDER 37 CFR 1.102(c)(1) and MPEP 708.02 (IV) ON THE BASIS OF THE APPLICANT'S AGE.

A grantable petition requires one of the following items:
(1) Statement by one named inventor in the application that he/she is 65 years of age, or more; or
(2) Certification by a registered attorney/agent having evidence such as a birth certificate, passport, driver's license, etc. showing one named inventor in the application is 65 years of age, or more.

**Name of Inventor who is 65 years of age, or older**

| Given Name | Middle Name | Family Name | Suffix |
|---|---|---|---|
| Leon | | Hopper | |

A signature of the applicant or representative is required in accordance with 37 CFR 1.33 and 10.18.
Please see 37 CFR 1.4(d) for the format of the signature.

Select (1) or (2) :

○ (1) I am an inventor in this application and I am 65 years of age, or more.

◉ (2) I am an attorney or agent registered to practice before the Patent and Trademark Office, and I certify that I am in possession of evidence, and will retain such in the application file record, showing that the inventor listed above is 65 years of age, or more.

| | | | |
|---|---|---|---|
| Signature | /Justin R. Nifong/ | Date (YYYY-MM-DD) | 2011-04-04 |
| Name | Justin R. Nifong | Registration Number | 59389 |

PTO/SB/130 (07-09)
Approved for use through 07/31/2012. OMB 0651- 0031
U.S. Patent and Trademark Office; U.S. DEPARTMENT OF COMMERCE
Under the Paperwork Reduction Act of 1995, no persons are required to respond to a collection of information unless it contains a valid OMB control number

# Privacy Act Statement

The Privacy Act of 1974 (P.L. 93-579) requires that you be given certain information in connection with your submission of the attached form related to a patent application or patent. Accordingly, pursuant to the requirements of the Act, please be advised that: (1) the general authority for the collection of this information is 35 U.S.C. 2(b)(2); (2) furnishing of the information solicited is voluntary; and (3) the principal purpose for which the information is used by the U.S. Patent and Trademark Office is to process and/or examine your submission related to a patent application or patent. If you do not furnish the requested information, the U.S. Patent and Trademark Office may not be able to process and/or examine your submission, which may result in termination of proceedings or abandonment of the application or expiration of the patent.

The information provided by you in this form will be subject to the following routine uses:

1. The information on this form will be treated confidentially to the extent allowed under the Freedom of Information Act (5 U.S.C. 552) and the Privacy Act (5 U.S.C. 552a). Records from this system of records may be disclosed to the Department of Justice to determine whether the Fr eedom of Information Act requires disclosure of these records.

2. A record from this system of records may be disclosed, as a routine use, in the course of presenting evidence to a court, magistrate, or administrative tribunal, including disclosures to opposing counsel in the course of settlement negotiations.

3. A record in this system of records may be disclosed, as a routine use, to a Member of Congress submitting a request involving an individual, to whom the record pertains, when the individual has requested assistance from the Member with respect to the subject matter of the record.

4. A record in this system of records may be disclosed, as a routine use, to a contractor of the Agency having need for the information in order to perform a contract. Recipients of information shall be required to comply with the requirements of the Privacy Act of 1974, as amended, pursuant to 5 U.S.C. 552a(m).

5. A record related to an International Application filed under the Patent Cooperation Treaty in this system of records may be disclosed, as a routine use, to the International Bureau of the World Intellectual Property Organization, pursuant to the Patent Cooperation Treaty.

6. A record in this system of records may be disclosed, as a routine use, to another federal agency for purposes of National Security review (35 U.S.C. 181) and for review pursuant to the Atomic Energy Act (42 U.S.C. 218(c)).

7. A record from this system of records may be disclosed, as a routine use, to the Administrator, General Services, or his/her designee, during an inspection of records conducted by GSA as part of that agency's responsibility to recommend improvements in records management practices and programs, under authority of 44 U.S.C. 2904 and 2906. Such disclosure shall be made in accordance with the GSA regulations governing inspection of records for this purpose, and any other relevant (i.e., GSA or Commerce) directive. Such disclosure shall not be used to make determinations about indivi duals.

8. A record from this system of records may be disclosed, as a routine use, to the public after either publication of the application pursuant to 35 U.S.C. 122(b) or issuance of a patent pursuant to 35 U.S.C. 151. Further, a record may be disclosed, subject to the limitations of 37 CFR 1.14, as a routine use, to the public if the record was filed in an application which became abandoned or in which the proceedings were terminated and which application is referenced by either a published application, an application open to public inspections or an issued patent.

9. A record from this system of records may be disclosed, as a routine use, to a Federal, State, or local law enforcement agency, if the USPTO becomes aware of a violation or potential violation of law or regulation.

UNITED STATES PATENT AND TRADEMARK OFFICE

Commissioner for Patents
United States Patent and Trademark Office
P.O. Box 1450
Alexandria, VA 22313-1450
www.uspto.gov

In re Application of
Stephen Dorozenski

Application No. 12980782

Filed: December 29,2010

Attorney Docket No. 146/2 UTIL

:DECISION ON PETITION TO MAKE SPECIAL
:UNDER 37 CFR 1.102(c)(1)

This is a decision on the electronic petition under 37 CFR 1.102 (c)(1), filed 04-APR-2011 to make the above-identified application special based on applicant's age as set forth in MPEP § 708.02, Section IV.

The petition is **GRANTED**.

A grantable petition to make an application special under 37 CFR 1.102(c)(1), MPEP § 708.02, Section IV: Applicant's Age must include a statement by applicant or a registered practitioner having evidence that applicant is at least 65 years of age. No fee is required.

Accordingly, the above-identified application has been accorded "special" status and will be taken up for action by the examiner upon the completion of all pre-examination processing.

Telephone inquiries concerning this electronic decision should be directed to the Electronic Business Center at 866-217-9197.

All other inquiries concerning either the examination or status of the application should be directed to the Technology Center.

UNITED STATES PATENT AND TRADEMARK OFFICE

Commissioner for Patents
United States Patent and Trademark Office
P.O. Box 1450
Alexandria, VA 22313-1450
www.uspto.gov

MAY 02 2011

OLIVE LAW GROUP, PLLC
125 EDINBURGH SOUTH DRIVE, SUITE 100
CARY NC 27511

| | |
|---|---|
| In re Application of: Dorozenski et al.<br>Application No.: 12/980782<br>Filed: December 29, 2010<br>Title: METHODS AND SYSTEMS FOR POWER GENERATION BY CHANGING DENSITY OF A FLUID | DECISION ON PETITION TO MAKE SPECIAL FOR NEW APPLICATION UNDER 37 C.F.R. § 1.102 & M.P.E.P. § 708.02 |

This is a decision on the renewed petition filed on April 27, 2011 to make the above-identified application special for accelerated examination procedure under 37 C.F.R. § 1.102(d).

The petition to make the application special is GRANTED.

The application is eligible for accelerated examination and the petition complies with the conditions for granting the application special status pursuant to the "Change to Practice for Petitions in Patent Applications to Make Special and for Accelerated Examination" published June 26, 2006, in the Federal Register. (71 Fed. Reg. 36323).

The prosecution of the instant application will be conducted expeditiously according to the following guidelines.

1. The application will be docketed to an examiner and taken up for action within two weeks of the date of this decision.

2. Restriction Practice:
   If the examiner determines that the claims are not directed to a single invention, a telephone request to elect one single invention will be made pursuant to MPEP 812.01. As a prerequisite to the grant of this petition, the applicant has agreed to make an oral election, by telephone, without traverse. If the applicant refuses to make an election without traverse, or the examiner cannot reach the applicant after a reasonable effort, the examiner will treat the first claimed invention (invention defined by claim 1) as having being constructively elected without traverse for examination.

3. Office action:
   If it is determined that, after appropriate consultation, there is a potential rejection or any other issue to be addressed, the examiner will telephone the applicant and arrange an interview to discuss and resolve the issue. An Office action, other than a Notice of Allowance and Fee(s) Due (Notice of Allowance), will not be issued unless either: 1) an interview was conducted but did not result in agreed to action that places the application in condition for allowance, or, 2) a determination is made that an interview would be unlikely to result in the application being placed in condition for allowance, and 3) an internal conference has been held to review any rejection of any claim.

4. Time for Reply:
   An Office action other than a Notice of Allowance or a final Office action will set a shortened statutory period of one month or thirty days, whichever is longer, for reply with no extension of time available under 37 CFR 1.136(a). Failure to timely file a reply within this non-extendible period for reply will result in the abandonment of the application.

5. Reply by Applicant:
   A timely reply to an Office action other than the Notice of Allowance must be submitted electronically via EFS or EFS-web and limited to addressing the rejections, objections and requirement made. Any amendment that attempts to: 1) add claims which would result in more than three pending independent claims or more than twenty pending total claims; 2) present claims not encompassed by the pre-examination search or an updated accelerated examination support document; or 3) present claims that are directed a non-elected invention or an invention other than that previously claimed and examined in the application, will be treated as not fully responsive and will not be entered.

   For any amendment to the claims (including any new claim) that is not encompassed by the accelerated examination support document, applicant must provide an updated accelerated examination support document that encompasses the amended or new claims at the time of filing of the amendment.

   To proceed expeditiously with the examination, it is recommended that a reply with amendments made to any claim or with any new claim being added be accompanied by an updated accelerated examination support document or a statement explaining how the amended or new claim is supported by the original accelerated examination support document.

6. Information Disclosure Statement (IDS):
   Any IDS filed during prosecution must be submitted electronically via EFS or EFS-web, accompanied by an updated accelerated examination support document, and be in compliance with 37 CFR 1.97 and 1.98.

7. Post-Allowance Processing:
   To expedite processing of the allowed application into a patent, the applicant must: 1) pay the required fees within one month of the date of the Notice of Allowance, and 2) not file any post allowance papers not required by the Office. In no event may the issue fee be paid and accepted later than three months from the date of the Notice of Allowance.

8. After-Final and Appeal Procedures:
   To expedite prosecution, after receiving the final Office action, applicant must: 1) promptly file a notice of appeal, an appeal brief and appeal fees; and 2) not request a pre-appeal brief conference.

   Any amendment, affidavit or other evidence filed after final Office action must comply with applicable rules and the requirements outlined in numbered paragraphs 5 and 6 above.

   On appeal, the application will proceed according to normal appeal procedures. After appeal, the application will again be treated special.

9. Proceedings Outside the Normal Examination Process:
   If the application becomes involved in a proceeding that is outside the normal examination process (e.g., a secrecy order, national security review, interference proceeding, petitions under 37 CFR 1.181, 182 or 183), the application will be treated special before and after such proceeding.

10. Final Disposition:
    The twelve month goal of this accelerated examination procedure ends with a final disposition. The mailing of a final Office action, a Notice of Allowance, the filing of a Notice of Appeal, or the filing of a Request for Continued Examination (RCE) is the final disposition.

If, during prosecution, a paper is not filed electronically using EFS-web, a reply is filed but is not fully responsive, the application is involved in an appeal, or a proceeding outside normal examination process, the application will still be examined expeditiously, however, the final disposition may occur more than twelve months from the filing of the application.

Any inquiry regarding this decision should be directed to Linda Sholl at (571) 272-4391

/Linda Sholl/
Linda Sholl
Special Programs Examiner
Technology Center 3700

UNITED STATES PATENT AND TRADEMARK OFFICE

Commissioner for Patents
United States Patent and Trademark Office
P.O. Box 1450
Alexandria, VA 22313-1450
www.uspto.gov

**Pepper/Millenniata**
**50th Floor**
**500 Grant Street**
**Pittsburgh, PA 15219-2502**

MAILED
APR 21 2011
OFFICE OF PETITIONS

| | | |
|---|---|---|
| In re Application of | : | |
| Matthew R. Linford, et al. | : | |
| Application No. 12/980,784 | : | DECISION ON PETITION |
| Filed: December 29, 2010 | : | TO WITHDRAW |
| Attorney Docket No. ML.034.NPUS00 | : | FROM RECORD |
| | : | |

This is a decision on the Request to Withdraw as attorney or agent of record under 37 C.F.R. § 1.36(b), filed March 10, 2011.

The request is **APPROVED**.

A grantable request to withdraw as attorney/agent of record must be signed by every attorney/agent seeking to withdraw or contain a clear indication that one attorney is signing on behalf of another/others. A request to withdraw will not be approved unless at least 30 (thirty) days would remain between the date of approval and the later of the expiration date of a time to file a response or the expiration date of the maximum time period which can be extended under 37 C.F.R. § 1.136(a).

The request was signed by Joseph T. Helmsen on behalf of all attorneys of record. All attorneys/agents have been withdrawn. Applicant is reminded that there is no attorney of record at this time.

All future communications from the Office will be directed to the assignee of the entire interest at the first copied address below until otherwise properly notified by the applicant.

Telephone inquiries concerning this decision should be directed to Terri Johnson at 571-272-2991.

/Terri Johnson/
Terri Johnson
Petitions Examiner
Office of Petitions

cc: **Brigham Young University**
**3760 HBLL**
**Technology Transfer Office**
**Provo, UT 84602-6844**

UNITED STATES PATENT AND TRADEMARK OFFICE

UNITED STATES DEPARTMENT OF COMMERCE
United States Patent and Trademark Office
Address: COMMISSIONER FOR PATENTS
P.O. Box 1450
Alexandria, Virginia 22313-1450
www.uspto.gov

| APPLICATION NUMBER | FILING OR 371(C) DATE | FIRST NAMED APPLICANT | ATTY. DOCKET NO./TITLE |
|---|---|---|---|
| 12/980,784 | 12/29/2010 | Matthew R. Linford | ML.034.NPUS00 |

**CONFIRMATION NO. 5330**

**POWER OF ATTORNEY NOTICE**

89485
Pepper/Millenniata
50th Floor
500 Grant Street
Pttsburgh, PA 15219-2502

*OC000000047217656*

Date Mailed: 04/18/2011

## NOTICE REGARDING CHANGE OF POWER OF ATTORNEY

This is in response to the Power of Attorney filed 03/10/2011.

- The withdrawal as attorney in this application has been accepted. Future correspondence will be mailed to the new address of record. 37 CFR 1.33.

/tsjohnson/

Office of Data Management, Application Assistance Unit (571) 272-4000, or (571) 272-4200, or 1-888-786-0101

UNITED STATES PATENT AND TRADEMARK OFFICE

Commissioner for Patents
United States Patent and Trademark Office
P.O. Box 1450
Alexandria, VA 22313-1450
www.uspto.gov

MAILED
AUG 05 2011
OFFICE OF PETITIONS

BANNER & WITCOFF, LTD.
1100 13th STREET, N.W.
SUITE 1200
WASHINGTON, DC 20005-4051

| | | |
|---|---|---|
| In re Application of | : | |
| James Molyneux, et al. | : | |
| Application No. 12/980,800 | : | DECISION ON PETITION |
| Filed: December 29, 2010 | : | UNDER 37 CFR 1.78(a)(3) |
| Attorney Docket No.: 215127.01557 | : | |

This is a decision on the petition, filed July 19, 2011, which is being treated as a petition under 37 CFR §§ 1.78(a)(3) and 1.78(a)(6) to accept an unintentionally delayed claim under 35 U.S.C. §§120 and 119(e) for the benefit of the prior-filed applications set forth in the concurrently filed amendment.

The petition is not signed by a registered attorney or agent of record. However, in accordance with 37 CFR 1.34(a), the signature of Mr. William F. Rauchholz appearing on the petition shall constitute a representation to the United States Patent and Trademark Office that he is authorized to represent the particular party on whose behalf he acts.

The petition is **DISMISSED**.

A petition for acceptance of a claim for late priority under 37 CFR §§ 1.78(a)(3) and 1.78(a)(6) is only applicable to those applications filed on or after November 29, 2000. Further, the petition is appropriate only after the expiration of the period specified in 37 CFR §§ 1.78(a)(2)(ii) and 1.78(a)(5)(ii). In addition, the petition under 37 CFR §§ 1.78(a)(3) and 1.78(a)(6) must be accompanied by:

**(1)** the reference required by 35 U.S.C. §§ 120 and 119(e) and 37 CFR §§ 1.78(a)(2)(i) and 1.78(a)(5)(i) of the prior-filed application, unless previously submitted;

**(2)** the surcharge set forth in § 1.17(t); and

**(3)** a statement that the entire delay between the date the claim was due under 37 CFR §§ 1.78(a)(2)(ii) and 1.78(a)(5)(ii) and the date the claim was filed was unintentional. The Director may require additional information where there is a question whether the delay was unintentional.

The petition does not satisfy items (1) above.

In this regard, the reference to add the above-noted, prior-filed applications on page one following the first sentence of the specification is not acceptable as drafted since it improperly incorporates by reference the prior-filed applications. An incorporation by reference statement added after an application's filing date is not effective because no new matter can be added to an application after its filing date (*see* 35 U.S.C. § 132(a)). If an incorporation by reference statement is included in an amendment to the specification to add a benefit claim under 35 U.S.C. § 120 after the filing date of the application, the amendment would not be proper. When a benefit claim under 35 U.S.C. § 120 is submitted after the filing of an application, the reference to the prior application cannot include an incorporation by reference statement of the prior application. *See* Dart Industries v. Banner, 636 F.2d 684, 207 USPQ 273 (C.A.D.C. 1980). *Note* MPEP §§ 201.06(c) and 608.04(b).

Before the petition under 37 CFR § 1.78(a)(3) and 1.78(a)(6) can be granted, a renewed petition, including an amendment in compliance with the provisions of 37 CFR 1.121 to correct the above matter is required.

Further correspondence with respect to this matter should be delivered through one of the following mediums:

By mail: Mail Stop PETITIONS
Commissioner for Patents
Post Office Box 1450
Alexandria, VA 22313-1450

By hand: Customer Service Window
Mail Stop Petitions
Randolph Building
401 Dulany Street
Alexandria, VA 22314

By fax: (571) 273-8300
ATTN: Office of Petitions

By Internet: EFS-Web[1]

Telephone inquiries concerning this decision should be directed to Sherry Brinkley at (571) 272-3204.

/SDB/
Sherry D. Brinkley
Petitions Examiner
Office of Petitions

[1] www.uspto.gov/ebc/efs_help.html (for help using EFS-Web call the Patent Electronic Business Center at (866) 217-9197)

UNITED STATES PATENT AND TRADEMARK OFFICE

Commissioner for Patents
United States Patent and Trademark Office
P.O. Box 1450
Alexandria, VA 22313-1450
www.uspto.gov

MAILED

AUG 31 2011

OFFICE OF PETITIONS

BANNER & WITCOFF, LTD.
1100 13th STREET, N.W.
SUITE 1200
WASHINGTON, DC 20005-4051

| | | |
|---|---|---|
| In re Application of | : | |
| James Molyneux, et al. | : | DECISION ON PETITION |
| Application No. 12/980,800 | : | UNDER 37 CFR 1.78(a)(3) AND |
| Filed: December 29, 2010 | : | UNDER 37 CFR 1.78(a)(6) |
| Attorney Docket No.: 215127.01501 | : | |

This is a decision on the renewed petition under 37 CFR §§ 1.78(a)(3) and 1.78(a)(6), filed August 17, 2011, to accept an unintentionally delayed claim under 35 U.S.C. §§120 and 119(e) for the benefit of the prior-filed applications set forth in the concurrently filed amendment.

The petition is **GRANTED.**

A petition for acceptance of a claim for late priority under 37 CFR §§ 1.78(a)(3) and 1.78(a)(6) is only applicable to those applications filed on or after November 29, 2000. Further, the petition is appropriate only after the expiration of the period specified in 37 CFR §§ 1.78(a)(2)(ii) and 1.78(a)(5)(ii). In addition, the petition under 37 CFR §§ 1.78(a)(3) and 1.78(a)(6) must be accompanied by:

**(1)** the reference required by 35 U.S.C. §§ 120 and 119(e) and 37 CFR §§ 1.78(a)(2)(i) and 1.78(a)(5)(i) of the prior-filed application, unless previously submitted;

**(2)** the surcharge set forth in § 1.17(t); and

**(3)** a statement that the entire delay between the date the claim was due under 37 CFR §§ 1.78(a)(2)(ii) and 1.78(a)(5)(ii) and the date the claim was filed was unintentional. The Director may require additional information where there is a question whether the delay was unintentional.

Additionally, the instant nonprovisional application must be pending at the time of filing of the reference to the prior-filed provisional application as required by 37 CFR 1.78(a)(5)(ii). Further, the nonprovisional application claiming the benefit of the prior-filed provisional application must have been filed within twelve months of the filing date of the prior-filed provisional application.

All the above requirements having been satisfied, the late claim for benefit of priority under 35 U.S.C. §§ 120 and 119(e) is accepted as being unintentionally delayed.

***The granting of the petition to accept the delayed benefit claim to the prior-filed applications under 37 CFR §§ 1.78(a)(3) and 1.78(a)(6) should not be construed as meaning that this application is entitled to the benefit of the filing date of the prior-filed applications. In order for this application to be entitled to the benefit of the prior-filed applications, all other requirements under 35 U.S.C. §§120 and 1.78(a)(1) and (a)(2) and under 35 U.S.C. §119(e) and 37 CFR 1.78(a)(4) and (a)(5) must be met. Similarly, the fact that the corrected Filing Receipt accompanying this decision on petition includes the prior-filed applications should not be construed as meaning that applicant is entitled to the claim for benefit of priority to the prior-filed applications noted thereon. Accordingly, the examiner will, in due course, consider this benefit claim and determine whether the application is entitled to the benefit of the earlier filing date.***

Any questions concerning this matter may be directed to the undersigned at (571) 272-3204. All other inquiries concerning either the examination procedures or status of the application should be directed to the Technology Center.

The application is being referred to the Office of Patent Application Processing (OPAP) for further pre-examination processing. Thereafter the application will be forwarded to Technology Center Art Unit 3711 for consideration by the examiner of the claim under 35 U.S.C. § §120 and 119(e) of the prior-filed nonprovisional and provisional applications.

/SDB/

Sherry D. Brinkley
Petitions Examiner
Office of Petitions

UNITED STATES PATENT AND TRADEMARK OFFICE

UNITED STATES DEPARTMENT OF COMMERCE
United States Patent and Trademark Office
Address: COMMISSIONER FOR PATENTS
P.O. Box 1450
Alexandria, Virginia 22313-1450
www.uspto.gov

| APPLICATION NO. | FILING DATE | FIRST NAMED INVENTOR | ATTORNEY DOCKET NO. | CONFIRMATION NO. |
|---|---|---|---|---|
| 12/980,875 | 12/29/2010 | Akinori KABAYA | 27135 | 5500 |

23389 7590 09/29/2011
SCULLY SCOTT MURPHY & PRESSER, PC
400 GARDEN CITY PLAZA
SUITE 300
GARDEN CITY, NY 11530

| EXAMINER |
|---|
| DVORAK, LINDA C |

| ART UNIT | PAPER NUMBER |
|---|---|
| 3739 | |

| MAIL DATE | DELIVERY MODE |
|---|---|
| 09/29/2011 | PAPER |

**Please find below and/or attached an Office communication concerning this application or proceeding.**

The time period for reply, if any, is set in the attached communication.

UNITED STATES PATENT AND TRADEMARK OFFICE

Commissioner for Patents
United States Patent and Trademark Office
P.O. Box 1450
Alexandria, VA 22313-1450
www.uspto.gov

SCULLY SCOTT MURPHY & PRESSER, PC
400 GARDEN CITY PLAZA
SUITE 300
GARDEN CITY NY 11530

| | | |
|---|---|---|
| In re Application of | : | |
| KABAYA, AKINORI, et al. | : | DECISION ON REQUEST TO |
| Application No. 12/980,875 | : | PARTICIPATE IN PATENT |
| Filed: December 29, 2010 | : | PCT/PROSECUTION HIGHWAY |
| Attorney Docket No. 27135 | : | PROGRAM AND PETITION |
| For: HIGH-FREQUENCY SURGERY | : | TO MAKE SPECIAL UNDER |
| APPARATUS AND MEDICAL | : | 37 CFR 1.102(a) |
| INSTRUMENT OPERTING METHOD | | |

This is a decision on the request to participate in the Patent Prosecution Highway (PPH) program and the petition under 37 CFR 1.102(a), filed September 20, 2011 to make the above-identified application special.

The request and petition are granted.

A grantable request to participate in the PPH pilot program and petition to make special require:

(1) The U.S. application must validly claim priority under 35 U.S.C. 119(a) to one or more applications filed in the JPO;
(2) Applicant must submit a copy of the allowable/patentable claim(s) from the JPO/PCT application(s) along with an English translation thereof and a statement that the English translation is accurate;
(3) All the claims in the U.S. application must sufficiently correspond or be amended to sufficiently correspond to the allowable/patentable claim(s) in the JPO application(s);
(4) Examination of the U.S. application has not begun;
(5) Applicant must submit a copy of all the office actions from each of the JPO/PCT application(s) containing the allowable/patentable claim(s) along with an English translation thereof and a statement that the English translation is accurate; and
(6) Applicant must submit an IDS listing the documents cited by the JPO examiner in the JPO office action along with copies of documents except U.S. patents or U.S. patent application publications.
In light of the petition being properly submitted, the request to participate in the PPH program and the petition comply with the above requirements. Accordingly, the above-identified application has been accorded "special" status.

The applicant is encouraged to cite and submit all relevant prior art references, if any, to facilitate examination in this application. Upon completion of pre-examination processing, this application will be forwarded to an examiner for examination.

Telephone inquiries concerning this decision should be directed to Henry C. Yuen at 571-272-4485. All other inquiries concerning the examination or status of the application should be directed to Linda Dvorak, SPE of Art Unit 3739, and 571-272-4764 for Class 606 and also accessible in the PAIR system at http://www.uspto.gov/ebc.index.html.

Petition is **granted**.

/Henry C. Yuen/

Henry C. Yuen, Special Programs Examiner
Technology Center 3700 – Mechanical Engineering,
Manufacturing and Products
571-272-4856

**ROGITZ & ASSOCIATES**
PATENT, TRADEMARK, AND COPYRIGHT CAUSES
SYMPHONY TOWERS
750 "B" STREET, SUITE 3120
SAN DIEGO, CALIFORNIA 92101
(619) 338-8075
FACSIMILE (619) 338-8078

# FACSIMILE TRANSMITTAL

**DATE:** August 25, 2011

| | | **FAX NO.:** |
|---|---|---|
| **FROM:** | Jeanne Gahagan | (619) 338-8078 |
| **TO:** | **Examiner Phunkulh** | (571) 273-3083 |

**Re:** **Sony Docket No. 50T5713.03**
Rogitz Ref. No.: 1168-111.CON
U.S. Serial No.: 12/980,926

Attached herewith is the following:

1. Board Decision from parent case, now issued patent no. 7,965,673 in 15 pgs.
2. Amendment in 9 pages

Please contact us, if there is a problem with transmission.

Jeanne Gahagan
Adminstrator
Rogitz & Associates

---

**We are transmitting a total of 25 Page(s) including this cover sheet.**

**IF YOU DO NOT RECEIVE ALL TRANSMITTED PAGES, PLEASE CALL US AT: 619/338-8075**

**ORIGINAL DOCUMENTS WILL BE SENT VIA:**

**( )U.S. MAIL ( )FEDERAL EXPRESS ( )MESSENGER (X)WILL NOT BE SENT**

UNITED STATES PATENT AND TRADEMARK OFFICE

UNITED STATES DEPARTMENT OF COMMERCE
United States Patent and Trademark Office
Address: COMMISSIONER FOR PATENTS
P.O. Box 1450
Alexandria, Virginia 22313-1450
www.uspto.gov

| APPLICATION NO. | FILING DATE | FIRST NAMED INVENTOR | ATTORNEY DOCKET NO. | CONFIRMATION NO. |
|---|---|---|---|---|
| 10/790,496 | 03/01/2004 | Ryuichi Iwamura | 50T5713.02 | 9501 |

36738 7590 12/22/2010
ROGITZ & ASSOCIATES
750 B STREET
SUITE 3120
SAN DIEGO, CA 92101

| EXAMINER |
|---|
| PHUNKULH, BOB A |

| ART UNIT | PAPER NUMBER |
|---|---|
| 2477 | |

| MAIL DATE | DELIVERY MODE |
|---|---|
| 12/22/2010 | PAPER |

**Please find below and/or attached an Office communication concerning this application or proceeding.**

The time period for reply, if any, is set in the attached communication.

Board Decision



PAGE 2/26 * RCVD AT 8/25/2011 2:46:38 PM [Eastern Daylight Time] * SVR:W-PTOFAX-002/2 * DNIS:2733083 * CSID:16193388078 * DURATION (mm-ss):09-32

UNITED STATES PATENT AND TRADEMARK OFFICE

---

BEFORE THE BOARD OF PATENT APPEALS
AND INTERFERENCES

---

*Ex parte* RYUICHI IWAMURA

---

Appeal 2010-009392
Application 10/790,496
Technology Center 2400

---

Before THOMAS S. HAHN, ELENI MANTIS MERCADER, and BRADLEY W. BAUMEISTER, *Administrative Patent Judges.*

HAHN, *Administrative Patent Judge.*

DECISION ON APPEAL[1]

---

[1] The two-month time period for filing an appeal or commencing a civil action, as recited in 37 C.F.R. § 1.304, or for filing a request for rehearing, as recited in 37 C.F.R. § 41.52, begins to run from the "MAIL DATE" (paper delivery mode) or the "NOTIFICATION DATE" (electronic delivery mode) shown on the PTOL-90A cover letter attached to this decision.

Appellant invokes our review under 35 U.S.C. § 134(a) from the rejection of claims 1-25. We have jurisdiction under 35 U.S.C. § 6(b). We affirm-in-part.

## STATEMENT OF THE CASE[2]

Appellant claims an electronic network system and method for communicating between network components. At least one network component is configured for wireless and wired path communications, and a server and/or the component determine(s) the type of communications path to use.[3] Claims 1 and 18 are illustrative:

1. A home entertainment system, comprising:

at least one server configured for both wired and wireless communication; and

at least one component configured for communicating with the server along a wired path and also being configured for communicating with the server along a wireless path, the server and/or the component determining which path to use for communication based on at least one of: a component preference, a bandwidth capability, an occupancy ratio.

18. A system for communicating between at least first and second components in a home network, comprising:

means for establishing a wired communication path between the components;

means for establishing a wireless communication path between the components;

---

[2] We refer for respective details to Appellant's Appeal Brief, filed May 20, 2009 (hereinafter App. Br.), the Examiner's Answer, mailed May 24, 2010 (hereinafter Ans.), and the Supplemental Reply Brief, filed May 27, 2010 (hereinafter Reply Br.). Further, we note that arguments not made by Appellant have not been considered and are deemed to be waived. *See* 37 C.F.R. § 41.37(c)(1)(vii).

[3] *See generally* Spec. 4:2–6:20; 11:4-9; 12:10–13:16; Figs. 1-3, 6, 7.



PAGE 4/26 * RCVD AT 8/25/2011 2:46:38 PM [Eastern Daylight Time] * SVR:W-PTOFAX-002/2 * DNIS:2733083 * CSID:16193388078 * DURATION (mm-ss):09-32

means for communicating data over a component-preferred path when a component-preferred path is indicated, the component-preferred path being selected from the wired and wireless communication paths;

means for, when no component-preferred path is indicated, communicating data over at least one of the paths based on at least one of: a bandwidth capability, an occupancy ratio.

*Rejections*

The Examiner, under 35 U.S.C. § 103(a), rejected claims 1-25 as being unpatentable over Falvo, U.S. Patent Publication 2003/0140343 A1 (Ans. 6-12).

The Examiner, under 35 U.S.C. § 112, 2nd paragraph, rejected claims 18-25, which contain means-plus-function language, as being indefinite (Ans. 3-5).[4]

*Appellant's Contentions*

Appellant asserts that Falvo fails to teach or suggest having a component "communicate over both a wired and a wireless link as required by Claim 1" (App. Br. 4). Relying on this asserted Falvo deficiency, Appellant additionally asserts that Falvo consequently provides "no reason to undertake the determination in Claim 1 of selecting which path to use, much less to undertake the determination using the specific parameters claimed" (*id.*).

Appellant asserts for claim 9 that Falvo fails to teach or suggest both (i) "determining that both a wired and a wireless path exist between the

[4] On April 12, 2010, an Order Remanding Appeal to Examiner was issued directing the Examiner to determine if claims 18-25 meet the requirements of 35 U.S.C. § 112, 2nd paragraph. The Examiner issued a second Examiner's Answer, mailed on May 24, 2010, that newly rejected these claims for being indefinite. Appellant traverses this rejection in the Supplemental Reply Brief filed May 27, 2010 (Reply Br. 1-3). Accordingly, we address *infra* the raised appeal issue.



PAGE 5/26 * RCVD AT 8/25/2011 2:46:38 PM [Eastern Daylight Time] * SVR:W-PTOFAX-002/2 * DNIS:2733083 * CSID:16193388078 * DURATION (mm-ss):09-32

components" and (ii) "the particular order of link selection tests required by Claim 9" (App. Br. 6).

Appellant *inter alia* contends claim 18 is patentable for the reasons asserted for claims 1 and 9 (*id.*).

With regard to the § 112 rejection, Appellant cites Specification disclosures including "flow charts" and argues that the identified material provides adequate disclosure to show what is meant by the means-plus-function claim language cited by the Examiner as being indefinite (Reply Br. 1-3).

## ISSUES

Appellant's contentions present us with the following issues:

1. Does Falvo, under § 103(a), teach or suggest configuring a component for communicating along both wireless and wired paths, and for determining which path to use as recited in claim 1?
2. Does Falvo, under § 103(a), teach or suggest determining the existence of wired and wireless paths, and communicating data over a path selected as recited in claim 9?
3. Does Falvo, under § 103(a), teach or suggest communicating data over a path selected as recited in claim 18?
4. Does Appellant's Specification disclose structure sufficient under 35 U.S.C. § 112, 2nd paragraph, for showing what is meant by the claim 18 recited "means for, when no component-preferred path is indicated, communicating data over at least one of the paths based on at least one of: a bandwidth capability, an occupancy ratio"?



PAGE 6/26 * RCVD AT 8/25/2011 2:46:38 PM [Eastern Daylight Time] * SVR:W-PTOFAX-002/2 * DNIS:2733083 * CSID:16193388078 * DURATION (mm-ss):09-32

## FINDINGS OF FACT

The following findings of fact (FF) are supported by a preponderance of evidence:

*The Invention*

1. Appellant discloses that "wireless bandwidth occupancy ratio is obtained by dividing currently used bandwidth by the total available bandwidth of the transmitter" (Spec. 12:18-19).
2. Appellant's Specification further discloses that "network bandwidth rarely stays constant, such that the present invention recognizes that it is sometimes desirable that the transmitter switch links." Logic "for adaptive network path control" is shown in Figure 7 (Spec. 12:10-15).

*Falvo*

3. Falvo discloses a digital cable TV system 300 (*see* Figure 3) that includes "wired display devices 320, 325," which "display devices . . . [also] support both HomeRF and 802.11b wireless protocols" (¶ [0048]). Additionally, Falvo discloses that the digital cable system 300 includes "wireless display . . . devices 310, 315" (*id.*).

## PRINCIPLES OF LAW

Examined claims are interpreted as broadly as is reasonable using ordinary and accustomed term meanings so as to be consistent with the specification, *In re Thrift*, 298 F.3d 1357, 1364 (Fed. Cir. 2002), while "taking into account whatever enlightenment by way of definitions or otherwise that may be afforded by the written description contained in the applicant's specification," *In re Morris*, 127 F.3d 1048, 1054 (Fed. Cir. 1997), and without reading limitations from examples given in the



PAGE 7/26 * RCVD AT 8/25/2011 2:46:38 PM [Eastern Daylight Time] * SVR:W-PTOFAX-002/2 * DNIS:2733083 * CSID:16193388078 * DURATION (mm-ss):09-32

specification into the claims, *In re Zletz*, 893 F.2d 319, 321-22 (Fed. Cir. 1989).

An Examiner's articulated reasoning for a rejection must possess a rational underpinning to support the legal conclusion of obviousness. *In re Kahn*, 441 F.3d 977, 988 (Fed. Cir. 2006). The Supreme Court has stated that "'[r]ejections on obviousness grounds cannot be sustained by mere conclusory statements; instead, there must be some articulated reasoning with some rational underpinning to support the legal conclusion of obviousness.'" *KSR Int'l Co. v. Teleflex Inc.*, 550 U.S. 398, 418 (2007) (quoting *Kahn*, 441 F.3d at 988). The Supreme Court has further stated that "[w]hen a work is available in one field of endeavor, design incentives and other market forces can prompt variations . . . . If a person of ordinary skill can implement a predictable variation, § 103 likely bars its patentability." *Id.* at 417.

## ANALYSIS

### *Claims 1-8*

Appellant separately argues independent claim 1 by initially contending that Falvo fails to teach or suggest having a component "communicate over both a wired and a wireless link" (App. Br. 4).

The Examiner cites to Falvo, paragraph [0048], and finds the reference "discloses display devices 310, 315, 320, 325 support[] both wired connection and wireless connection (802.11b or HomeRF wireless protocols)" (Ans. 13).

Claim 1 recites "at least one component configured for communicating with [a] server along a wired path and also . . . along a



PAGE 8/26 * RCVD AT 8/25/2011 2:46:38 PM [Eastern Daylight Time] * SVR:W-PTOFAX-002/2 * DNIS:2733083 * CSID:16193388078 * DURATION (mm-ss):09-32

wireless path." Using ordinary and accustomed term meanings, we fail to find any claim 1 limitation that narrows the component communications to be over both wired and wireless links as asserted by Appellant (App. Br. 4). Instead, we find a broadly reasonable interpretation for the recited component as being "configured," i.e., arranged or set up to communicate using wired and wireless paths. *See Thrift*, 298 F.3d at 1364. We find Falvo display devices *support* both wired and wireless communications, e.g., display devices 320 and 325 (FF 3) and, therefore, we agree with the Examiner in finding that Falvo displays are read on by claim 1. Consequently, we are not persuaded by Appellant's initial argument.

Appellant relies on the initial asserted Falvo deficiency to additionally argue that the reference provides "no reason to undertake the determination in Claim 1 of selecting which path to use, much less to undertake the determination using the specific parameters claimed" (App. Br. 4). In view of our being unpersuaded by Appellant's assertion that Falvo is deficient concerning wired and wireless path configurations, we also are unpersuaded by Appellant's *ipso facto* argument that Falvo is consequently deficient as to reasoning for determining whether to use wired or wireless paths (*see id.*).

The Examiner denotes that claim 1 recites "determining which path to use for communication based on at <u>least one of</u>: a component preference, a bandwidth capability, an occupancy ratio" (Ans. 13-14). Further, the Examiner finds and reasons that Falvo "discloses selecting the path based on the component preference. By default, the prefer[red] connection for display devices 320 and 325 are twisted pair connections and the prefer[red] connection for display devices 310, 315 are wireless connections" (Ans. 14).



PAGE 9/26 * RCVD AT 8/25/2011 2:46:38 PM [Eastern Daylight Time] * SVR:W-PTOFAX-002/2 * DNIS:2733083 * CSID:16193388078 * DURATION (mm-ss):09-32

We agree with and adopt the Examiner's findings as to wired and wireless connections for Falvo display devices 310, 315, 320, and 325 (*accord* FF 3).

Appellant, however, argues:

> [U]nlike Claim 1 in which (1) a server and/or (2) a component determines which path to use for communication based on *component* preference, at most Falvo appears to suggest that a *human* sets up message transmission parameters apparently to suit the communication path selected by *the human*, although Falvo does not even say this much. Regardless, because the rejections are based on a clearly erroneous misunderstanding that Falvo "by default" suggests a *server or component* selecting a path based on a *component* preference, neither of which is true, the rejections constitute clear reversible error.

(Reply Br. 4-5). Appellant cites Falvo paragraph [0061] as evidence that "comes closer than elsewhere" from the reference for suggesting that a human, as opposed to server or a component, selects a type of communication path (Reply Br. 4). We find that this cited Falvo paragraph discloses that a "message originator . . . sets up a plurality of message transmission parameters" (¶ [0061]). Appellant has not cited any other evidence of record. We, however, find that Falvo further discloses that transmission parameters include "destination, format, or the like" (¶ [0060]). Thus, we find that Falvo discloses that a human sets up "destination, format, or the like," but nowhere do we find Falvo teaches or suggests that a human selects any communication path type. We, accordingly, fail to find any teaching or suggestion that the selection of path type is made by a human as argued by Appellant. Since Falvo teaches both wired and wireless configurations, there implicitly has to be a selection made between the configuration types. The Examiner reasons that by default Falvo selects configuration paths based on component preferences (Ans. 14). We do not



PAGE 10/26 * RCVD AT 8/25/2011 2:46:38 PM [Eastern Daylight Time] * SVR:W-PTOFAX-002/2 * DNIS:2733083 * CSID:16193388078 * DURATION (mm-ss):09-32

find persuasive evidence or argument in the record that overcomes this reasoning. *See In re Lamberti*, 545 F.2d 747, 750 (CCPA 1976) ("[T]he question under 35 U.S.C. § 103 is not merely what the references expressly teach, but what they would have suggested to one of ordinary skill in the art at the time the invention was made." (citation omitted)).

For the foregoing reasons, we will sustain the obviousness rejection of claim 1. We will also sustain the rejection of dependent claims 2-8 that are not separately argued. *In re Nielson*, 816 F.2d 1567, 1572 (Fed. Cir. 1987).

*Claims 9-17*

Appellant separately argues independent claim 9 with an initial assertion that Falvo fails to teach or suggest "determining that both a wired and a wireless path exist between the components" (App. Br. 6).[5] What Appellant argues is that "because two components may be connected over both of two paths . . . does not mean that any determination of such is explicitly made as claimed" (*id.*).

This argument is narrower than the recited limitation in that the recited "between the components" is without antecedent including whether two or more components are covered. Additionally, we do not find any evidence of record that the recited "between" would be understood by an ordinarily skilled artisan as restricting the number of components to two. We find from using ordinary and accustomed meanings for recited terms that a reasonably broad interpretation for the disputed limitation reads on the

[5] Claim 9 recites: "A method for communicating a home network, comprising: determining that both a wired and a wireless path exist between the components; determining whether at least one of the components prefers a particular path and if so, communicating data over that path; otherwise communicating data over at least one of the paths based on at least one of: a bandwidth capability, an occupancy ratio."



PAGE 11/26 * RCVD AT 8/25/2011 2:46:38 PM [Eastern Daylight Time] * SVR:W-PTOFAX-002/2 * DNIS:2733083 * CSID:16193388078 * DURATION (mm-ss):09-32

Falvo teaching to support display devices with both wired and wireless communication links (FF 3), as is found by the Examiner (Ans. 14). In particular, we fail to find the recited "determining" is anywhere narrowed. Accordingly, we find the limitation to be reasonably broad enough to encompass deciding that both a wired path exists (*see* twisted pair interconnecting display device 320/325 and WLAN bridge 330) and a wireless path exists (*see* wireless communication between display device 310/315 and WLAN bridge 330). Thus, we find the claim reads on the Falvo teaching to support display devices with both wired and wireless communications links.

Appellant also asserts that Falvo fails to teach or suggest the limitations for "determining whether at least one of the components prefers a particular path and if so, communicating data over that path; otherwise communicating data over at least one of the paths based on at least one of: a bandwidth capability, an occupancy ratio." What Appellant argues is that:

> [A]s signaled by the term "otherwise", the protocol in Claim 9 differs slightly from Claim 1 in that a preferential path determination is first made and only then is a bandwidth/occupancy ratio determination made. Since Falvo admittedly teaches no protocol at all for link selection it most certainly cannot suggest the particular order of link selection tests required by Claim 9.

(App. Br. 6.)

We find Appellant's contention that claim 9 differs from claim 1 to be unavailing. Claim 1 recites making a determination "based on at least one of" three parameters; whereas claim 9 recites making a determination to communicate data over a component's preferred path "otherwise communicating data over" a path based on at least one of two other



PAGE 12/26 * RCVD AT 8/25/2011 2:46:38 PM [Eastern Daylight Time] * SVR:W-PTOFAX-002/2 * DNIS:2733083 * CSID:16193388078 * DURATION (mm-ss):09-32

parameters. Like claim 1, we find from using ordinary and accustomed term meanings and a reasonably broad interpretation that claim 9 recites a method for alternative path selection based on at least component preference, which the Examiner and we find to be taught by Falvo (*supra*; *accord* FF 3). We fail to find persuasive evidence or argument in the record disputing this interpretation. Accordingly, we are not persuaded that the Examiner erred in rejecting claim 9.

For the foregoing reasons, we will sustain the rejection of claim 9. We, accordingly, will also sustain the rejection of claims 10-17 that are not separately argued. *Nielson*, 816 F.2d at 1572.

*Claims 18-25*

I

Independent claim 18 stands rejected under § 112, 2nd paragraph, because a means-plus-function limitation was found by the Examiner to be indefinite (Ans. 3), namely "means for, when no component-preferred path is indicated, communicating data over at least one of the paths based on at least one of: a bandwidth capability, an occupancy ratio." According to the Examiner this limitation is indefinite because the Specification does not disclose (i) an algorithm to determine the bandwidth capability or the occupancy ratio" (Ans. 4); (ii) "how . . . current transmitter bandwidth is determined" (*id.*); and (iii) "if or how the bandwidth is measured" (Ans. 5).

Appellant traverses the rejection (Reply Br. 1-3), and cites disclosures (Spec. 4:2-14) as explaining that included flow charts, e.g., Fig. 7, illustrated logic for software or hardware elements to perform claimed functions (Reply Br. 2). The Examiner acknowledges that "portions of the specification and drawings may appear to describe the corresponding structure for performing



PAGE 13/26 * RCVD AT 8/25/2011 2:46:38 PM [Eastern Daylight Time] * SVR:W-PTOFAX-002/2 * DNIS:2733083 * CSID:16193388078 * DURATION (mm-ss):09-32

the claimed function: Fig. 7, Spec. 12 (last paragraph); 13 :9-16" (Ans. 4). Appellant contends that these disclosures cited by the Examiner indeed do adequately describe hardware structure and software logic for performing claimed functions (Reply Br. 1-2).

Appellant asserts that a "formula for determining occupancy ratio" is disclosed at Spec. 12:18-19 (Reply Br. 3). We agree (FF 1, 2). Appellant further asserts

> "[B]andwidth" is a common term of art that skilled artisans . . . recognize to mean simply data throughput as a function of time, typically expressed in data elements per second and routinely measured by most computing devices, see, e.g., www.dictionary.com which gives several definitions of the term that say just that. The present application requires use of "current transmitter bandwidth" which plainly means the number of data elements per second the transmitter currently is sending.

(Reply Br. 3.) Based on at least the cited evidence, we agree with Appellant that bandwidth is a term of art known to ordinarily skilled artisans.

From our review of the identified Specification disclosures and Figure 7, as well as Appellant's explanatory arguments and cited evidence, we are persuaded that the Examiner erred in rejecting claims 18-25 under § 112, 2nd paragraph, as being indefinite, and we will not sustain the rejection.

II

The Examiner also rejected claims 18-25 under § 103(a) (Ans. 10-12), and Appellant separately argues independent claim 18 relying *inter alia* on arguments asserted for claims 1 and 9 (App. Br. 6). We find the following limitation is pivotal, namely "means for, when no component-preferred path is indicated, communicating data over at least one of the paths based on at least one of: a bandwidth capability, an occupancy ratio." Unlike claims 1



PAGE 14/26 * RCVD AT 8/25/2011 2:46:38 PM [Eastern Daylight Time] * SVR:W-PTOFAX-002/2 * DNIS:2733083 * CSID:16193388078 * DURATION (mm-ss):09-32

and 9, we find this limitation positively recites that "no component-preferred path is indicated" and that data is to be communicated over a path "based on at least one of: a bandwidth capability, an occupancy ratio."[6]

The Examiner finds that "*FALVO* fails to explicitly disclose that the server determining which path to use for communication based [on] one of the component preference or bandwidth capability and the occupancy ratio" (Ans. 10). The Examiner then finds and reasons that:

> *FALVO*, however, discloses that display devices 320, 325 are connected to WLAN 330 via twisted pair and the display devices are [sic] also support both HomeRF and 802.11b wireless protocol (see paragraph 0048).
>
> Therefore, it would have been obvious to one having ordinary skill in the art at the time of invention was made [sic] selects the path based on the bandwidth capacity of the link or occupancy ratio of the link in order to improve the system's performance where wireless connection may be more suitable for a connection for the server is currently serving multiples twisted pair connections and available for wireless connection or the server may be serving multiple wireless connections and available for wired connection.
>
> (*Id.*)

From our review of Falvo we concur with the Examiner and Appellant that the reference is silent as to using a wired or wireless path based on "bandwidth capability" or "occupancy ratio." Based on the record, however, we conclude the Examiner erred. We find the Examiner made conclusory

---

[6] The Examiner and Appellant appear to have interpreted the disputed means for limitation as covering both the functionalities of (i) selecting a path based on at least one of the bandwidth capability and occupancy ratio, and (ii) communicating data over the selected path (*see* Ans. 10 and App. Br. 6-7). Claim interpretation is not an issue raised by Appellant. Arguments not made by Appellant are deemed to be waived. *See* 37 C.F.R. § 41.37 (c)(1)(vii).



PAGE 15/26 * RCVD AT 8/25/2011 2:46:38 PM [Eastern Daylight Time] * SVR:W-PTOFAX-002/2 * DNIS:2733083 * CSID:16193388078 * DURATION (mm-ss):09-32

statements without articulated reasoning concerning an ordinarily skilled artisan appreciating that if a preferred communications path is not selected an improvement would be provided by selecting a path based on "bandwidth capability" or "occupancy ratio" (*id.*). *KSR*, 550 U.S. at 418. For example, the Examiner is silent as to what could be the improvement. Implicitly, the improvement might involve bandwidth capability, but how Falvo might be modified to achieve that or any other improvement is not addressed. Consequently, in order for us to sustain the rejection, we would need to resort to impermissible speculation or unfounded assumptions or rationales to supply deficiencies in the bases for the rejection before us. *In re Warner*, 379 F.2d 1011, 1017 (CCPA 1967).

For the foregoing reasons, we will not sustain the rejections under §§ 103(a) and 112, 2nd paragraph, of independent claim 18. We, accordingly, also will not sustain these rejections for claims 19-25.

## CONCLUSIONS

We conclude that:

1. Falvo, under § 103(a), teaches configuring a component for communicating along both wireless and wired paths, and for determining which path to use as recited in claim 1.
2. Falvo, under § 103(a), teaches determining the existence of wired and wireless paths, and communicating data over a path selected as recited in claim 9.
3. Falvo, under § 103(a), teaches communicating data over a path selected as recited in claim 18.



PAGE 16/26 * RCVD AT 8/25/2011 2:46:38 PM [Eastern Daylight Time] * SVR:W-PTOFAX-002/2 * DNIS:2733083 * CSID:16193388078 * DURATION (mm-ss):09-32

4. Appellant's Specification discloses structure sufficient under 35 U.S.C. § 112, 2nd paragraph, for showing what is meant by the claim 18 recited "means for, when no component-preferred path is indicated, communicating data over at least one of the paths based on at least one of: a bandwidth capability, an occupancy ratio."

ORDER

The Examiner's rejection of claims 1-17 is affirmed. The Examiner's rejections of claims 18-25 are reversed.

No time period for taking any subsequent action in connection with this appeal may be extended under 37 C.F.R. § 1.136(a)(1)(v).

AFFIRMED-IN-PART

babc

ROGITZ & ASSOCIATES
750 B STREET
SUITE 3120
SAN DIEGO, CA 92101



PAGE 17/26 * RCVD AT 8/25/2011 2:46:38 PM [Eastern Daylight Time] * SVR:W-PTOFAX-002/2 * DNIS:2733083 * CSID:16193388078 * DURATION (mm-ss):09-32

**IN THE UNITED STATES PATENT AND TRADEMARK OFFICE**

| | | |
|---|---|---|
| First Named Applicant: Iwamura | ) | Art Unit: 2477 |
| Serial No.: 12/980,926 | ) | Examiner: Phunkulh |
| Filed: December 29, 2010 | ) | **50T5713.03** |
| For: **SYSTEM AND METHOD FOR MULTI-LINK COMMUNICATION IN HOME NETWORK** | ) | August 25, 2011<br>750 B STREET, Suite 3120<br>San Diego, CA 92101 |

**RESPONSE TO OFFICE ACITON**

Commissioner for Patents
Alexandria, VA

Dear Sir:

This responds to the Office Action dated July 11, 2011.

1168-111CAMD

1. (currently amended) A home entertainment system, comprising:

at least one server configured for both wired and wireless communication; and

at least one component communicating with the server ~~along a wired path and also communicating with the server along a wireless path~~, a wireless path between the server and component being available for communication between the server and the component, a wired path between the server and component being available for communication between the server and the component, the server and/or the component determining which path from among the wired path and the wireless path to use for communication based on at least one of: ~~a component preference,~~ a bandwidth capability, an occupancy ratio.

2. (original) The system of Claim 1, wherein a respective address is associated with each path over which the component communicates.

3. (original) The system of Claim 2, wherein the addresses are IP addresses.

4. (original) The system of Claim 1, wherein the component is selected from the group of components consisting of: televisions, and portable computers.

5. (original) The system of Claim 4, wherein the component is a TV.

6. (original) The system of Claim 1, wherein at least one of: the server, and component, determines which path to use for communication based at least in part on a component preference.

7. (original) The system of Claim 1, wherein at least one of: the server, and component, determines which path to use for communication based at least in part on a bandwidth capability.

8. (original) The system of Claim 1, wherein at least one of: the server, and component, determines which path to use for communication based at least in part on an occupancy ratio.

9. (currently amended) A method for communicating a home network, comprising:

determining that both a wired path and a wireless path exist between two components;

responsive to a determination that ~~determining whether~~ at least one of the two components prefers a particular path ~~and if so~~, communicating data over that path; ~~otherwise~~

determining that at least one of the two components does not prefer a particular path selected from the wired path and the wireless path; and

responsive to determining that at least one of the two components does not prefer a particular path selected from the wired path and the wireless path, communicating data between the two components over at least one of the paths between the two components based on at least one of: a bandwidth capability, an occupancy ratio.



PAGE 20/26 * RCVD AT 8/25/2011 2:46:38 PM [Eastern Daylight Time] * SVR:W-PTOFAX-002/2 * DNIS:2733083 * CSID:16193388078 * DURATION (mm-ss):09-32

10. (original) The method of Claim 9, comprising communicating simultaneously between the components using both paths.

11. (original) The method of Claim 9, wherein a respective address is associated with each path over which the component communicates.

12. (original) The method of Claim 11, wherein the addresses are IP addresses.

13. (original) The method of Claim 9, wherein at least one component is selected from the group of components consisting of: televisions, and portable computers.

14. (original) The method of Claim 13, wherein the component is a TV.

15. (original) The method of Claim 9, wherein at least one of: a server, and a component, determines which path to use for communication based at least in part on a component preference.

16. (original) The method of Claim 9, wherein at least one of: a server, and a component, determines which path to use for communication based at least in part on a bandwidth capability.



PAGE 21/26 * RCVD AT 8/25/2011 2:46:38 PM [Eastern Daylight Time] * SVR:W-PTOFAX-002/2 * DNIS:2733083 * CSID:16193388078 * DURATION (mm-ss):09-32

17. (previously presented) The method of Claim 9, wherein at least one of: a server, and a component, determines which path to use for communication based at least in part on an occupancy ratio.

18. (previously presented) A system for communicating between at least first and second components in a home network, comprising:

a first processor in the first component and a second processor in the second component, the first processor causing the first component to communicate data over a component-preferred path when a component-preferred path is indicated, the component-preferred path being selected from a wired and wireless communication paths over both of which the components communicate with each other;

the first processor, when no component-preferred path is indicated, communicating data to the second processor over at least one of the paths based on at least one of: a bandwidth capability, an occupancy ratio.

19. (original) The system of Claim 18, wherein a respective address is associated with each path.

20. (original) The system of Claim 19, wherein the addresses are IP addresses.



PAGE 22/26 * RCVD AT 8/25/2011 2:46:38 PM [Eastern Daylight Time] * SVR:W-PTOFAX-002/2 * DNIS:2733083 * CSID:16193388078 * DURATION (mm-ss):09-32

21. (original) The system of Claim 18, wherein at least one component is selected from the group of components consisting of: televisions, and portable computers.

22. (original) The system of Claim 21, wherein the component is a TV.

23. (previously presented) The system of Claim 18, wherein at least one of: a server, a component, determines which path to use for communication based at least in part on a component preference.

24. (previously presented) The system of Claim 18, wherein at least one of: a server, a component, determines which path to use for communication based at least in part on a bandwidth capability.

25. (previously presented) The system of Claim 18, wherein at least one of: a server, a component, determines which path to use for communication based at least in part on an occupancy ratio.



PAGE 23/26 * RCVD AT 8/25/2011 2:46:38 PM [Eastern Daylight Time] * SVR:W-PTOFAX-002/2 * DNIS:2733083 * CSID:16193388078 * DURATION (mm-ss):09-32

## Remarks

Reconsideration of the above-captioned application is respectfully requested. The double patenting rejection is noted and will be addressed at such time as no further impediments to patentability remain.

It is believed that the amendment to Claim 1 overcomes the indefiniteness rejection of Claims 1-8.

Claims 1-25 have been rejected under 35 U.S.C. §103 as being unpatentable over Falvo.

It is believed that the amendments advanced herein conform to the Board decision in the parent application dated December 22, 2010 ("the Board decision") in which the Board reversed the rejections of Claims 18-25 by finding limitation "pivotal" that when no component-preferred path is indicated, data is communicated over at least one of the paths based on at least one of: a bandwidth capability, an occupancy ratio, Board decision, page 12, last four lines.

*Claim 1*

The reason that the Board sustained the rejection of independent Claim 1 was that it recited not only the two "pivotal" conditions noted above for selecting between paths (which otherwise would have rendered it patentable) but also, as an alternative, "component preference". Per the Board, Falvo could be broadly read to teach this option. Please see the Board Decision, page 7, last paragraph and last line of page 8, continuing to page 9. ***Since Claim 1 has been amended to remove the third***



PAGE 24/26 * RCVD AT 8/25/2011 2:46:38 PM [Eastern Daylight Time] * SVR:W-PTOFAX-002/2 * DNIS:2733083 * CSID:16193388078 * DURATION (mm-ss):09-32

***alternative***, now requiring one of the two "pivotal" limitations that the Board decreed were patentable, Claim 1 is now allowable over Falvo in accordance with the Board's reasoning.

*Claim 9*

The Board's discussion of Claim 9 starting on page 9 of the Board Decision first focused on Applicant's argument of "between the components", noting that this was "without antecedent" and thus not materially narrowing the "determining" step. Claim 9 now explicitly recites "between the components" to address this concern of the Board's.

Perhaps more importantly, on the top of page 11 of the Board Decision the Board determined that as it was previously worded, Claim 9 could be read to require ***only*** selecting a path based on component preference, and did not necessarily require making any determination using the two methods the Board found to be "pivotable". As now amended, Claim 9 positively recites a determination grounded in the Board's "pivotal" holding, rendering it patentable over Falvo in accordance with the Board's reasoning.

*Claim 18*

Claim 18 continues to recite the Board's "pivotal" limitation, rendering it patentable in accordance with the Board's reasoning.

The Examiner is cordially invited to telephone the undersigned at (619) 338-8075 for any reason which would advance the instant application to allowance.

Respectfully submitted,

/John L. Rogitz/

John L. Rogitz
Registration No. 33,549
Attorney of Record
750 B Street, Suite 3120
San Diego, CA 92101
Telephone: (619) 338-8075

JLR:jg

1168-111CAMD

UNITED STATES PATENT AND TRADEMARK OFFICE

Commissioner for Patents
United States Patent and Trademark Office
P.O. Box 1450
Alexandria, VA 22313-1450
www.uspto.gov

Paper No.

SCHLUMBERGER-DOLL RESEARCH
ATTN: INTELLECTUAL PROPERTY
LAW DEPARTMENT
P.O. BOX 425045
CAMBRIDGE MA 02142

MAILED
AUG 26 2011
OFFICE OF PETITIONS

| | | |
|---|---|---|
| In re Application of | : | |
| Ivan Nikolyn and | : | |
| Sergey Safonov | : | DECISION ACCORDING STATUS |
| Application No. 12/981,092 | : | UNDER 37 C.F.R. § 1.47(a) |
| Filed: December 29, 2010 | : | |
| Atty Docket No. 18.0123 US NP | : | |

This is a decision on the PETITION BY JOINT INVENTOR(S) FILING ON BEHALF OF OTHER JOINT INVENTOR(S) WHO REFUSE(S) TO JOIN IN APPLICATION OR CANNOT BE REACHED (37 CFR§ 1.47(A) filed August 15, 2011.

The petition is **GRANTED**.

The above-identified application was filed on December 29, 2010, with an application data sheet, but without an executed oath or declaration. Accordingly, on January 13, 2011, the Office mailed a "Notice to File Missing Parts of Application," requiring an executed oath or declaration and the surcharge for its late filing. This Notice set a two-month time limit for reply with extensions of time obtainable under § 1.136(a).

In response, applicant filed the instant petition, made timely by an extension of time for response within the fifth month. The petition included a declaration executed by joint inventor Safonov on behalf of himself and on behalf of non-signing inventor Nikolyn. Applicant asserts that status under 1.47(a) is proper because joint inventor Nikolyn has been contacted by email and has stated that he will not sign papers. By statement of facts of patent practitioner Brigid Laffey, and with supporting documentary evidence, applicant has shown that

inventor Nikolyn has refused to join in the application. Note is taken of Exhibit A, which reflects that the presentation of papers to inventor Nikolyn by electronic mail at the address used, was successful. The inventor responded by return email non-cooperatively with respect to signing the declaration. Specifically, he responded "There must be a kind of interest from my side to sign something. … What is my personal interest to sign this papers?" Rule 47 applicant has submitted adequate proof of the inventor's refusal to join in the application.

The declaration filed August 15, 2011, has been reviewed and found in compliance with § 1.63. The petition includes the petition fee and the last known address of inventor Nikolyn (There appears to be a typographical error in the statement as it refers to "Leo Eisner" but sets forth address used for inventor Nikolyn on the declaration and in correspondence).

**It is noted that on the declaration the inventor's name is spelled as "Nikolyn"; however, in the email communications, the inventor signs his name as "Nikolin." If there is a typographical error in the spelling of the inventor's name, this may be corrected by way of the filing of a supplemental application data sheet signed by the attorney of record.**

In view thereof, this application is hereby accorded Rule 1.47(a) status.

As provided in new Rule 1.47(c), this Office will forward notice of this application's filing to the non-signing inventor at the address given in the petition. Notice of the filing of this application will also be published in the Official Gazette.

Telephone inquiries related to this decision should be directed to the undersigned at (571) 272-3219.

Nancy Johnson
Senior Petitions Attorney
Office of Petitions

UNITED STATES PATENT AND TRADEMARK OFFICE

Commissioner for Patents
United States Patent and Trademark Office
P.O. Box 1450
Alexandria, VA 22313-1450
www.uspto.gov

MR. IVAN VLADIMIROVICH NIKOLIN
23-4-163, Skobelevskaya str.
Moscow 117042
Russia

MAILED
AUG 26 2011
OFFICE OF PETITIONS

In re Application of :
Ivan Nikolyn[1] and :
Sergey Safonov :
Application No. 12/981,092 : LETTER
Filed: December 29, 2010 :
Atty Docket No. 18.0123 US NP :

Dear Mr. Nikolin:

You are named as a joint inventor in the above-identified United States patent application filed under the provisions of 35 U.S.C. 116 (United States Code) and 37 CFR 1.47(a), Rules of Practice in Patent Cases. Should a patent be granted on the application you will be designated therein as a joint inventor.

As a named inventor you are entitled to inspect any paper in the file wrapper of the application, order copies of all or any part thereof (at a prepaid cost per 37 CFR 1.19) or make your position of record in the application. Alternatively, you may arrange to do any of the preceding through a registered patent attorney or agent presenting written authorization from you. If you care to join the application, counsel of record (see below) would presumably assist you. Joining in the application would entail the filing of an appropriate oath or declaration by you pursuant to 37 CFR 1.63. However, no action on your part is required for this patent to issue with you as a named inventor.

Telephone inquiries regarding this communication should be directed to Petitions Attorney Nancy Johnson at (571) 272-3219.

[1] Your name is spelled in the records of the Office as Nikolyn; however, it appears that it may be properly spelled as Nikolin.

Requests for information regarding your application should be directed to the File Information Unit at (703) 308-2733. Information regarding how to pay for and order a copy of the application, or a specific paper in the application, should be directed to the Certification Division at (571) 272-3150 or 1-800-972-6382 (outside the Washington D.C. area).

Nancy Johnson
Senior Petitions Attorney
Office of Petitions

SCHLUMBERGER-DOLL RESEARCH
ATTN: INTELLECTUAL PROPERTY
LAW DEPARTMENT
P.O. BOX 425045
CAMBRIDGE MA 02142

**Doc Code: PET.GREEN**
**Document Description: Petition for Green Tech Pilot**

PTO/SB/420 (11-10)
Approved for use through 01/31/2011. OMB 0651-0062
U.S. Patent and Trademark Office; U. S. DEPARTMENT OF COMMERCE
Under the Paperwork Reduction Act of 1995, no persons are required to respond to a collection of information unless it displays a valid OMB control number.

# PETITION TO MAKE SPECIAL UNDER THE GREEN TECHNOLOGY PILOT PROGRAM

| | | |
|---|---|---|
| Attorney Docket Number: 246618-1 | Application Number (if known): 12/981093 | Filing date: 2010-12-29 |
| First Named Inventor: Ralph Teichmann | | |
| Title: METHODS AND SYSTEMS FOR CONTROLLING A POWER CONVERSION SYSTEM | | |

**APPLICANT HEREBY REQUESTS TO PARTICIPATE IN THE GREEN TECHNOLOGY PILOT PROGRAM FOR THE ABOVE-IDENTIFIED APPLICATION. See Instruction Sheet on page 2.**

This petition must be timely filed electronically using the USPTO electronic filing system, EFS-Web.

1. By filing this petition:

   **Applicant is requesting early publication: Applicant hereby requests early publication under 37 CFR 1.219 and the publication fee set forth in 37 CFR 1.18(d) accompanies this request.**

2. By filing this petition: applicant is agreeing to make an election without traverse in a telephonic interview and elect an invention that meets the eligibility requirements for the Green Technology Pilot Program, if the Office determines that the claims are not obviously directed to a single invention. See Instruction Sheet.

3. This request is accompanied by statements of special status for the eligibility requirement.

4. The application contains no more than three (3) independent claims and twenty (20) total claims.

5. The application does not contain any multiple dependent claims.

6. Other attachments: Statement Concerning the Basis for the Special Status

| | |
|---|---|
| Signature /Allison W. Mages/ | Date 2011-11-16 |
| Name (Print/Typed) Allison W .Mages | Registration Number 57,275 |

***Note:*** *Signatures of all the inventors or assignees of record of the entire interest or their representative(s) are required in accordance with 37 CFR 1.33 and 11.18. Please see 37 CFR 1.4(d) for the form of the signature. If necessary, submit multiple forms for more than one signature see below*.*

☐ *Total of ..... forms are submitted.

The information is required to obtain or retain a benefit by the public which is to file (and by the USPTO to process) an application. Confidentiality is governed by 35 U.S.C. 122 and 37 CFR 1.11 and 1.14. This collection is estimated to take 12 hours to complete, including gathering, preparing, and submitting the completed application form to the USPTO. Time will vary depending upon the individual case. Any comments on the amount of time you require to complete this form and/or suggestions for reducing this burden, should be sent to the Chief Information Officer, U.S. Patent and Trademark Office, U.S. Department of Commerce, P.O. Box 1450, Alexandria, VA 22313-1450. DO NOT SEND FEES OR COMPLETED FORMS TO THIS ADDRESS. **SEND TO: Commissioner for Patents, P.O. Box 1450, Alexandria, VA 22313-1450.**

*If you need assistance in completing the form, call 1-800-PTO-9199 and select option 2.*

Under the Paperwork Reduction Act of 1995, no persons are required to respond to a collection of information unless it displays a valid OMB control number.

# Instruction Sheet for Petition to Make Special Under the Green Technology Pilot Program

(Not to be Submitted to the USPTO)

**The following is a summary of the requirements (for more information see the notices (i) "Pilot Program for Green Technologies Including Greenhouse Gas Reduction," (ii) "Elimination of Classification Requirement in the Green Technology Pilot Program," and (iii) "Expansion and Extension of the Green Technology Pilot Program," available on the USPTO web site at http://www.uspto.gov/patents/init_events/green_tech.jsp):**

1) The application must be a non-reissue, non-provisional utility application filed under 35 U.S.C. 111 (a), or an international application that has entered the national stage in compliance with 35 U.S.C. 371, irrespective of the filing date of the application. Reexamination proceedings are excluded from this pilot program.

2) The application must contain three or fewer independent claims and twenty or fewer total claims. The application must not contain any multiple dependent claims. For an application that contains more than three independent claims or twenty total claims, or multiple dependent claims, applicant must file a preliminary amendment in compliance with 37 CFR 1.121 to cancel the excess claims and/or the multiple dependent claims at the time the petition to make special is filed.

3) The claims must be directed to a single invention that materially enhances the quality of the environment, or that materially contributes to: (1) the discovery or development of renewable energy resources; (2) the more efficient utilization and conservation of energy resources; or (3) green house gas emission reduction (see the eligibility requirements of sections II and III of the notice (i) cited above). The petition must include a statement that, if the USPTO determines that the claims are directed to multiple inventions (e.g., in a restriction requirement), applicant will agree to make an election without traverse in a telephonic interview, and elect an invention that meets the eligibility requirements in section II or III of the notice (i) cited above.

4) The petition to make special must be timely filed electronically using the USPTO electronic filing system, EFS-Web, and selecting the document description of "Petition for Green Tech Pilot" on the EFS-Web screen. Applicant should use form PTO/SB/420, which is available as a Portable Document Format (PDF) fillable form in EFS-Web and on the USPTO Web site.

5) The petition to make special must be filed at least one day prior to the date that a first Office action (which may be an Office action containing only a restriction requirement) appears in the Patent Application Information Retrieval (PAIR) system. Applicant may check the status of the application using PAIR.

6) The petition to make special must be accompanied by a request for early publication in compliance with 37 CFR 1.219 and the publication fee set forth in 37 CFR 1.18(d).

## Privacy Act Statement

The **Privacy Act of 1974 (P.L. 93-579)** requires that you be given certain information in connection with your submission of the attached form related to a patent application or patent. Accordingly, pursuant to the requirements of the Act, please be advised that: (1) the general authority for the collection of this information is 35 U.S.C. 2(b)(2); (2) furnishing of the information solicited is voluntary; and (3) the principal purpose for which the information is used by the U.S. Patent and Trademark Office is to process and/or examine your submission related to a patent application or patent. If you do not furnish the requested information, the U.S. Patent and Trademark Office may not be able to process and/or examine your submission, which may result in termination of proceedings or abandonment of the application or expiration of the patent.

The information provided by you in this form will be subject to the following routine uses:

1. The information on this form will be treated confidentially to the extent allowed under the Freedom of Information Act (5 U.S.C. 552) and the Privacy Act (5 U.S.C 552a). Records from this system of records may be disclosed to the Department of Justice to determine whether disclosure of these records is required by the Freedom of Information Act.
2. A record from this system of records may be disclosed, as a routine use, in the course of presenting evidence to a court, magistrate, or administrative tribunal, including disclosures to opposing counsel in the course of settlement negotiations.
3. A record in this system of records may be disclosed, as a routine use, to a Member of Congress submitting a request involving an individual, to whom the record pertains, when the individual has requested assistance from the Member with respect to the subject matter of the record.
4. A record in this system of records may be disclosed, as a routine use, to a contractor of the Agency having need for the information in order to perform a contract. Recipients of information shall be required to comply with the requirements of the Privacy Act of 1974, as amended, pursuant to 5 U.S.C. 552a(m).
5. A record related to an International Application filed under the Patent Cooperation Treaty in this system of records may be disclosed, as a routine use, to the International Bureau of the World Intellectual Property Organization, pursuant to the Patent Cooperation Treaty.
6. A record in this system of records may be disclosed, as a routine use, to another federal agency for purposes of National Security review (35 U.S.C. 181) and for review pursuant to the Atomic Energy Act (42 U.S.C. 218(c)).
7. A record from this system of records may be disclosed, as a routine use, to the Administrator, General Services, or his/her designee, during an inspection of records conducted by GSA as part of that agency's responsibility to recommend improvements in records management practices and programs, under authority of 44 U.S.C. 2904 and 2906. Such disclosure shall be made in accordance with the GSA regulations governing inspection of records for this purpose, and any other relevant (*i.e.*, GSA or Commerce) directive. Such disclosure shall not be used to make determinations about individuals.
8. A record from this system of records may be disclosed, as a routine use, to the public after either publication of the application pursuant to 35 U.S.C. 122(b) or issuance of a patent pursuant to 35 U.S.C. 151. Further, a record may be disclosed, subject to the limitations of 37 CFR 1.14, as a routine use, to the public if the record was filed in an application which became abandoned or in which the proceedings were terminated and which application is referenced by either a published application, an application open to public inspection or an issued patent.
9. A record from this system of records may be disclosed, as a routine use, to a Federal, State, or local law enforcement agency, if the USPTO becomes aware of a violation or potential violation of law or regulation.

UNITED STATES PATENT AND TRADEMARK OFFICE

UNITED STATES DEPARTMENT OF COMMERCE
United States Patent and Trademark Office
Address: COMMISSIONER FOR PATENTS
P.O. Box 1450
Alexandria, Virginia 22313-1450
www.uspto.gov

| APPLICATION NO. | FILING DATE | FIRST NAMED INVENTOR | ATTORNEY DOCKET NO. | CONFIRMATION NO. |
|---|---|---|---|---|
| 12/981,093 | 12/29/2010 | Ralph Teichmann | 246618 (22402-248) | 5892 |

45432 7590 12/07/2011
PATRICK W. RASCHE (22402)
ARMSTRONG TEASDALE LLP
7700 Forsyth Boulevard
Suite 1800
St. Louis, MO 63105

| EXAMINER |
|---|

| ART UNIT | PAPER NUMBER |
|---|---|
| 2121 | |

| NOTIFICATION DATE | DELIVERY MODE |
|---|---|
| 12/07/2011 | ELECTRONIC |

**Please find below and/or attached an Office communication concerning this application or proceeding.**

The time period for reply, if any, is set in the attached communication.

Notice of the Office communication was sent electronically on above-indicated "Notification Date" to the following e-mail address(es):

uspatents@armstrongteasdale.com

UNITED STATES PATENT AND TRADEMARK OFFICE

Commissioner for Patents
United States Patent and Trademark Office
P.O. Box 1450
Alexandria, VA 22313-1450
www.uspto.gov

PATRICK W. RASCHE (22402)
ARMSTRONG TEASDALE LLP
7700 Forsyth Boulevard
Suite 1800
St. Louis MO 63105

| | | |
|---|---|---|
| In re Application of | : | |
| TEICHMANN, Ralph et al. | : | **DECISION ON PETITION** |
| Application No. 12/981,093 | : | **TO MAKE SPECIAL UNDER** |
| Filed: December 29, 2010 | : | **THE GREEN TECHNOLOGY** |
| For: **METHODS AND SYSTEMS FOR CONTROLLING A POWER CONVERSION SYSTEM** | : | **PILOT PROGRAM** |

The petition filed November 16, 2011 has been treated as a petition under 37 CFR 1.102 to make the above-identified application special under the pilot program for applications pertaining to Green Technologies as set forth in 74 Federal Register Notice 64666 (December 8, 2009) and amended by 75 Federal Register Notice 28554 (May 21, 2010).

The petition is **DISMISSED**.

If reconsideration of this decision is desired, a petition for reconsideration must be filed within ONE (1) MONTH OR THIRTY (30) DAYS from the mail date of this decision, whichever is longer. No extension of this time limit can be granted under 37 CFR 1.136(a) or (b). The petition for reconsideration should include an exhaustive attempt to provide the lacking item(s) noted below, since, after a decision on the petition for reconsideration, no further reconsideration or review of the matter will be undertaken by the Director.

A grantable petition to make an application special under 37 CFR 1.102 and the pilot program as set forth in 74 FR 64666 must be directed to a nonprovisional application filed under 35 USC 111(a) or be a national stage entry under 35 USC 371, exclusive of any reissue applications and be filed prior to the date of the notice, December 8, 2009.

In order to qualify for special status, the following requirements must be met. 1) The application must have no more than 3 independent claims and no more than 20 total claims. 2) The application must not contain any multiple dependent claims. 3) The petition must state the basis for seeking special status, i.e., the claimed invention either: A) materially enhances the quality of the environment or B) materially contributes to: i) the discovery or development of renewable energy resources, ii) the more efficient utilization and conservation of energy resources, or iii)

greenhouse gas emission reduction. 4) If the disclosure is not clear on its face that the claimed invention materially contributes under category (A) or (B), the petition must be accompanied by a statement by the applicant, assignee, or an attorney/agent registered to practice before the Office explaining how the materiality standard is met. 5) A statement that applicant will agree to make an election without traverse in a telephonic interview if a restriction requirement is made by the examiner. 6) The petition to make special must be filed electronically. 7) The petition must be filed at least one day prior to the date that a first Office Action appears in the Patent Application Information Retrieval (PAIR) system. 8) The petition must be accompanied by a request for early publication in compliance with 37 CFR 1.219 and include the publication fee as set forth in 37 CFR 1.18(d).

The requirement for a fee for consideration of the petition to make special for applications pertaining to Green Technologies has been waived.

The petition lacks item(s) 4 above for the reasons explained in more detail below.

In the "Statement Concerning the Basis for the Special Status," petitioner describes various aspects of the disclosed and claimed invention, where the primary basis for "explaining how the materiality standard is met" is contained in the statement "The above-described embodiments facilitate efficient and cost-effective operation of a distributed network of power conversion system (See[00044]), including systems integrated clean, renewable alternative forms of energy, such as wind and solar energy (See [0002])." However, there is no language in the claims to suggest that the claimed "power conversion system" and method is in any way related to or includes "wind and solar energy." At most, the claims define a method and system for controlling power converters coupled to an electrical grid, as well as measurement devices and positioning receivers for monitoring and locating the converters. Accordingly, the explanation of how the materiality standard is met does not correspond to the invention defined in the claims of the instant application. Furthermore, any request for reconsideration will be reviewed pursuant to Section II of the Pilot Program for Green Technologies as set forth in 74 Federal Register Notice 64666, which specifies that "materiality standard does not permit an applicant to speculate as to how a hypothetical end-user might specially apply the invention in a manner that could materially enhance the quality of the environment. Nor dies such standard permit an applicant to enjoy the benefit of advanced examination merely because some minor aspect of the claimed invention may enhance the quality of the environment."

Any reconsideration of this decision should be submitted through the USPTO electronic filing system, EFS-Web, and selecting the document description of "Petition for Green Tech Pilot" on the EFS-Web screen.

Any inquiry regarding this decision should be directed to Eddie C. Lee at (571) 272 - 1732.

/Eddie C. Lee/

Eddie C. Lee
Quality Assurance Specialist, TC 2100

**IN THE UNITED STATES PATENT AND TRADEMARK OFFICE**

| | |
|---|---|
| **First Named Inventor: Ralph TEICHMANN** | ) |
| **Confirmation No.: 5892** | ) |
| | ) |
| **Serial No.: 12/981,093** | ) |
| | ) |
| **Filing Date: 12-29-2010** | ) |
| | ) |
| **Atty Docket No.: 246618-1 (22402-248)** | ) |

Commissioner for Patents
P.O. Box 1450
Alexandria, VA 22313-1450

**Request for Reconsideration**

SIR:

This is responsive to the Decision on Petition, dated as mailed 7 December 2011, in the above-referenced application.

Applicant respectfully requests reconsideration of Applicant's Petition to Make Special on the basis that the present invention materially contributes to the development of renewable energy resources.

The Decision to Make Special Under the Green Technology Pilot Program (hereinafter "the Decision") states that the instant claims are merely directed to a method for sputtering a target and a sputtering cathode. The Decision states that there is no language in the claims to suggest that the claimed "power conversion system" and method is in any way related to or includes "wind and solar energy." The Decision states that at most, the claims define a method and system for controlling power converters coupled to an electrical grid, as well as measurement devices and positioning receivers for monitoring and locating the converters. The Decision further implies that Applicant speculates as to how an

end user might specially apply the invention in a manner that could materially contribute to materially enhancing the quality of the environment or materially contributing to development of renewable energy resources or energy conservation or greenhouse gas reduction. Applicant does not agree with the comments made in the Decision.

Applicant respectfully submits that embodiments of the present invention relate generally to electric power generation, and more specifically to, methods and systems for managing power applied to an electrical grid. (see at least paragraph [0001]).

Solar energy and wind energy have increasingly become attractive sources of energy and have been recognized as clean, renewable alternative forms of energy. Wind and solar power generation systems penetrate established utility grids at both the transmission and distribution level. The installations may be widely dispersed throughout the utility network and often require long feeder lines for successful integration within the utility network. (see at least paragraph [0002]).

A distributed power generation network includes a plurality of power generation systems each coupled to the electrical grid at different locations. For example, a conventional steam power generation plant may be connected to the grid at a first point of interconnection (POI), a wind farm may be connected to the grid at a second POI, and a solar power generation system may be connected to the grid at a third POI. Electricity applied to the electrical grid is required to meet grid connectivity expectations. These requirements address safety issues, grid

stability issues, transmission loss management, as well as power quality concerns. For example, a grid connectivity expectation is that the generated power be conditioned to ensure that the power matches the voltage and frequency of the electricity flowing through the grid. Typically, power generation systems are controlled separately, each reacting to grid conditions. (see at least paragraph [0003]).

The methods and systems described in the application facilitate managing a distributed utility network that includes at least one of a power conversion system and a load coupled through a power converter. The power converter provides location information, power information, timing information, and phase angle information. For example, the power converter may include a global positioning system (GPS) receiver configured to receive location information and temporal information. The location information and temporal information may be used in conjunction with power and phase angle information to determine operating parameters for the power converter that are based at least partially on a location of the power converter and/or a time of day at that location. (see at least paragraph [0010]).

The location information and temporal information, along with power information corresponding to actual power output by the power converter, power available to be output by the power converter, voltage, current, and/or phase angle at the POI with the electrical grid may be transmitted to a central processing device, which may be referred to herein as an Energy Management System (EMS). This information may be combined with information from other

power conversion systems and voltage, current, phase angle, or other types of power information derived from other utility assets. This information may be used at a utility and/or regional operator level to monitor power balance, grid stability, and weather patterns and their effect on solar/wind power generation. The information may also be used as inputs to forecasting tools. Furthermore, the central processing device may determine operating instructions for the power conversion systems based at least partially on the information received. (see at least paragraph [0011]).

As described above, solar plants may be required to curtail at the request of utilities or system operators. They may also be required to provide information regarding the total amount of power available. The utility or power provider may benefit from knowing both the location and the amount of available power that can be provided should grid conditions change. This is done dynamically as changes can occur very quickly. This additional functionality provides a utility operator with system-wide information about grid stability and grid conditions (faults, grid separation, etc). (see at least paragraph [0035]). Moreover, the methods and systems described in the application facilitate managing a power generation system having limited control over the power source, for example, but not limited to, solar, wind or tidal power generation systems. Geographic location information and power production information are used to predict and control a power balance in a distributed utility network and a voltage profile in the regulation zone. (see at least paragraph [0043]).

The communications allowing the exchange of information with the utility and/or system operator on a grid-wide basis may reduce the operating margin and therefore reduce energy costs. (see at least paragraph [0038]). The above-described embodiments facilitate efficient and cost-effective operation of a distributed network of power conversion systems. (see at least paragraph [0044]). By reducing costs associated with the operation of a distributed network of power conversion systems, embodiments of the present invention incentivize the creation and adoption renewable energy resources, such as, but not limited to, solar, wind or tidal power generation, and contribute to the development of renewable energy resources.

The undersigned attorney may be contacted at the number below to facilitate the resolution of any matters. Please charge any fees that are incurred in connection with this Statement to deposit account no. 09-0470.

Respectfully submitted,

General Electric Company

By : /Allison W Mages/
Allison Weiner Mages
Reg. No. 57,275

Dated: December 28, 2011

GE Global Patent Operation
2 Corporate Drive, Suite 648
Shelton, CT 06484
203-944-6730

UNITED STATES PATENT AND TRADEMARK OFFICE

UNITED STATES DEPARTMENT OF COMMERCE
United States Patent and Trademark Office
Address: COMMISSIONER FOR PATENTS
P.O. Box 1450
Alexandria, Virginia 22313-1450
www.uspto.gov

| APPLICATION NO. | FILING DATE | FIRST NAMED INVENTOR | ATTORNEY DOCKET NO. | CONFIRMATION NO. |
|---|---|---|---|---|
| 12/981,093 | 12/29/2010 | Ralph Teichmann | 246618 (22402-248) | 5892 |

45432 7590 01/09/2012
PATRICK W. RASCHE (22402)
ARMSTRONG TEASDALE LLP
7700 Forsyth Boulevard
Suite 1800
St. Louis, MO 63105

| EXAMINER |
|---|

| ART UNIT | PAPER NUMBER |
|---|---|
| 2121 | |

| NOTIFICATION DATE | DELIVERY MODE |
|---|---|
| 01/09/2012 | ELECTRONIC |

**Please find below and/or attached an Office communication concerning this application or proceeding.**

The time period for reply, if any, is set in the attached communication.

Notice of the Office communication was sent electronically on above-indicated "Notification Date" to the following e-mail address(es):

uspatents@armstrongteasdale.com

UNITED STATES PATENT AND TRADEMARK OFFICE

Commissioner for Patents
United States Patent and Trademark Office
P.O. Box 1450
Alexandria, VA 22313-1450
www.uspto.gov

1/9/12

PATRICK W. RASCHE (22402)
ARMSTRONG TEASDALE LLP
7700 Forsyth Boulevard
Suite 1800
St. Louis MO 63105

| | | |
|---|---|---|
| In re Application of | : | |
| Teichmann et al. | : | DECISION ON PETITION |
| Application No. 12/981,093 | : | TO MAKE SPECIAL UNDER |
| Filed: 12/29/2010 | : | THE GREEN TECHNOLOGY |
| Attorney Docket No. **246618 (22402-248)** | : | PILOT PROGRAM |

This is a decision on the request for reconsideration, filed 12/28/2011, to make the above-identified application special under the pilot program for applications pertaining to Green Technologies as set forth 74 Federal Register Notice 64666 (December 8, 2009).

The petition is **DENIED**.

A grantable petition to make an application special under 37 CFR 1.102 and the pilot program as set forth in 74 FR 64666 must be directed to a nonprovisional application filed under 35 USC 111(a) or be a national stage entry under 35 USC 371, exclusive of any reissue applications and be filed prior to the date of the notice, December 8, 2009.

In order to qualify for special status, the following requirements must be met. 1) The application must have no more than 3 independent claims and no more than 20 total claims. 2) The application must not contain any multiple dependent claims. 3) The petition must state the basis for seeking special status, i.e., the claimed invention either: A) materially enhances the quality of the environment or B) materially contributes to: i) the discovery or development of renewable energy resources, ii) the more efficient utilization and conservation of energy resources, or iii) greenhouse gas emission reduction. 4) If the disclosure is not clear on its face that the claimed invention materially contributes under category (A) or (B), the petition must be accompanied by a statement by the applicant, assignee, or an attorney/agent registered to practice before the Office explaining how the materiality standard is met. 5) A statement that applicant will agree to make an election without traverse in a telephonic interview if a restriction requirement is made by the examiner. 6) The petition to make special must be filed electronically. 7) The petition must be filed at least one day prior to the date that a first Office Action appears in the Patent Application Information Retrieval (PAIR) system. 8) The petition must be accompanied by a

request for early publication in compliance with 37 CFR 1.219 and include the publication fee as set forth in 37 CFR 1.18(d).

The requirement for a fee for consideration of the petition to make special for applications pertaining to Green Technologies has been waived.

The petition lacks item(s) 4.

In regard to item 4, petitioner should note that the instant petition includes a statement identifying the basis for the special status (i.e., whether the instant invention (1) materially enhances the quality of the environment or materially contributes to (2) development of renewable energy resources or energy conservation, or (3) greenhouse gas reduction) as required by sections II and III of the notice. However, as stated in the notice, applicant must also provide a statement pertaining to the materiality standard if the application disclosure is not clear on its face as to the materiality of the basis for the special status of the invention. It is not agreed that the application on its face meets that materiality standard.

Applicants argue that embodiments of the present invention relate generally to electric power generation, and more specifically to, methods and systems for managing power applied to an electrical grid. Applicant continues to point out that the specification discloses solar and wind energy as examples of power sources. As pointed out in the original petition decision, there is nothing in the claims that relates to or even mentions wind and solar energy.

Applicant is directed to the original Federal Register Notice (12/8/2009) which states in part under Section I (Requirements): (4) The **claims** must be directed to a single invention that materially enhances the quality of the environment, or that materially contributes to : (1) The discovery or development of renewable energy resources; (2) the more efficient utilization and conservation of energy resources; or (3) greenhouse gas emission reduction... (emphasis added)

Applicants are correct that the specification discloses embodiments relating to solar and wind energy, however as stated above, the **claims** are silent with respect to solar or wind energy. The claims are therefore open to other embodiments including those that are not solar and wind related. The materiality standard does not permit an applicant to speculate how an end user might specifically apply the invention in a manner that could materially contribute to (1) materially enhancing the quality of the environment or materially contributing to (2) development of renewable energy resources or energy conservation, or (3) greenhouse gas reduction.

Any reconsideration of this decision should be submitted through the USPTO electronic filing system, EFS-Web, and selecting the document description of "Petition for Green Tech Pilot" on the EFS-Web screen.

Telephone inquiries concerning this decision should be directed to Tom Dunn at 571-272-1171.

The application is being forwarded to the Technology Center Art Unit 2121 for action in its regular turn.

/Tom Dunn/

Tom Dunn
Quality Assurance Specialist
Technology Center 1700

**Doc Code: PET.GREEN**
**Document Description: Petition for Green Tech Pilot**

PTO/SB/420 (11-10)
Approved for use through 01/31/2011. OMB 0651-0062
U.S. Patent and Trademark Office; U. S. DEPARTMENT OF COMMERCE
Under the Paperwork Reduction Act of 1995, no persons are required to respond to a collection of information unless it displays a valid OMB control number.

# PETITION TO MAKE SPECIAL UNDER THE GREEN TECHNOLOGY PILOT PROGRAM

| | | |
|---|---|---|
| Attorney Docket Number: 22194-77967 | Application Number (if known): 12/981,107 | Filing date: December 29, 2010 |
| First Named Inventor: Chin-Yao Tsai | | |
| Title: METHOD FOR MANUFACTURING THIN-FILM SOLAR CELL AND THIN-FILM SOLAR CELL | | |

**APPLICANT HEREBY REQUESTS TO PARTICIPATE IN THE GREEN TECHNOLOGY PILOT PROGRAM FOR THE ABOVE-IDENTIFIED APPLICATION. See Instruction Sheet on page 2.**

This petition must be timely filed electronically using the USPTO electronic filing system, EFS-Web.

1. By filing this petition:

   **Applicant is requesting early publication: Applicant hereby requests early publication under 37 CFR 1.219 and the publication fee set forth in 37 CFR 1.18(d) accompanies this request.**

2. By filing this petition: applicant is agreeing to make an election without traverse in a telephonic interview and elect an invention that meets the eligibility requirements for the Green Technology Pilot Program, if the Office determines that the claims are not obviously directed to a single invention. See Instruction Sheet.

3. This request is accompanied by statements of special status for the eligibility requirement.

4. The application contains no more than three (3) independent claims and twenty (20) total claims.

5. The application does not contain any multiple dependent claims.

6. Other attachments: STATEMENT OF SPECIAL STATUS FOR THE ELIGIBILITY REQUIREMENT

| | |
|---|---|
| Signature /Tim Tingkang Xia/ | Date January 11, 2011 |
| Name (Print/Typed) Tim Tingkang Xia | Registration Number 45,242 |

***Note:*** *Signatures of all the inventors or assignees of record of the entire interest or their representative(s) are required in accordance with 37 CFR 1.33 and 11.18. Please see 37 CFR 1.4(d) for the form of the signature. If necessary, submit multiple forms for more than one signature see below*.*

☐ *Total of ..... forms are submitted.

The information is required to obtain or retain a benefit by the public which is to file (and by the USPTO to process) an application. Confidentiality is governed by 35 U.S.C. 122 and 37 CFR 1.11 and 1.14. This collection is estimated to take 12 hours to complete, including gathering, preparing, and submitting the completed application form to the USPTO. Time will vary depending upon the individual case. Any comments on the amount of time you require to complete this form and/or suggestions for reducing this burden, should be sent to the Chief Information Officer, U.S. Patent and Trademark Office, U.S. Department of Commerce, P.O. Box 1450, Alexandria, VA 22313-1450. DO NOT SEND FEES OR COMPLETED FORMS TO THIS ADDRESS. **SEND TO: Commissioner for Patents, P.O. Box 1450, Alexandria, VA 22313-1450.**

*If you need assistance in completing the form, call 1-800-PTO-9199 and select option 2.*

S/N **12/981,107**

PATENT
Confirmation No.: **5923**

**IN THE UNITED STATES PATENT AND TRADEMARK OFFICE**

| | | | |
|---|---|---|---|
| Applicant: | Chin-Yao Tsai | Examiner: | Unassigned |
| Serial No.: | **12/981,107** | Group Art Unit: | 1725 |
| Filed: | December 29, 2010 | Docket No.: | 22194-77967 |
| Title: | METHOD FOR MANUFACTURING THIN-FILM SOLAR CELL AND THIN-FILM SOLAR CELL | | |

**STATEMENT OF SPECIAL STATUS FOR THE ELIGIBILITY REQUIREMENT**

Mail Stop: Petition
Commissioner of Patents
P.O. Box 1450
Alexandria, Virginia 22313-1450

January 11, 2011

**CUSTOMER NO. 24728**

Dear Sir/Madam:

This Statement of Special Status for the Eligibility Requirement is filed pursuant to the requirements listed in PTO/SB/420, filed herewith, and pursuant to the requirements of 74 Fed. Reg. 64,666 (Dec. 8, 2009), as amended by 75 Fed. Reg. 28,554 (May 21, 2010), and 75 Fed. Reg. 69,049 (November 10, 2010).

A basis for the special status is that aspects of the invention relate to ***thin film solar cells*** that ***materially contribute to the discovery or development of renewable energy resources***. Applicant respectfully submits that it is clear on the above-referenced application's face that the claimed invention materially contributes to ***the discovery or development of renewable energy resources***, so no statement is required explaining how the materiality standard is met.

The above-referenced application is a non-reissue, non-provisional utility application filed December 29, 2010 under 35 U.S.C. § 111(a). The application contains no more than three (3) independent claims and twenty (20) total claims. The application does not contain any multiple dependent claims. Further, applicant respectfully submits that the claims of the application are directed to a single invention of a solar cell and manufacturing method thereof. However, if the USPTO determines that the claims are directed to multiple inventions (e.g., in a

restriction requirement), applicant agrees to make an election without traverse in a telephonic interview, and elect an invention that meets the eligibility requirements.

A first Office action (including an Office action containing only a restriction requirement) has not yet appeared in the Patent Application Information Retrieval (PAIR) system.

A request for early publication of the present application in compliance with 37 CFR 1.219 and the publication fee set forth in 37 CFR 1.18(d) are concurrently accompanied herewith this petition.

It is believed that no fee is due. However, the Commissioner is hereby authorized to charge any petition fee under 37 CFR 1.102, and any deficiency of fees which may be required, or to credit of any overpayments to Deposit Account No. 50-3537.

The Applicant respectfully requests that a favorable decision on this Petition to Make Special Under the Green Technology Pilot Program be granted and the application be accorded special status under the Green Technology Pilot Program.

Respectfully submitted,

MORRIS, MANNING & MARTIN, LLP

January 11, 2011

Tim Tingkang Xia
Attorney for Applicant on the Record
Reg. No. 45,242

MORRIS, MANNING & MARTIN, LLP
1600 Atlanta Financial Center
3343 Peachtree Road, N.E.
Atlanta, Georgia 30326-1044
Phone: 404-233-7000
Direct: 404-495-3678
Customer No. 24728

UNITED STATES PATENT AND TRADEMARK OFFICE

UNITED STATES DEPARTMENT OF COMMERCE
United States Patent and Trademark Office
Address: COMMISSIONER FOR PATENTS
P.O. Box 1450
Alexandria, Virginia 22313-1450
www.uspto.gov

| APPLICATION NO. | FILING DATE | FIRST NAMED INVENTOR | ATTORNEY DOCKET NO. | CONFIRMATION NO. |
|---|---|---|---|---|
| 12/981,107 | 12/29/2010 | Chin-Yao Tsai | 22194-77967 | 5923 |

24728 7590 01/25/2011
MORRIS MANNING MARTIN LLP
3343 PEACHTREE ROAD, NE
1600 ATLANTA FINANCIAL CENTER
ATLANTA, GA 30326

| EXAMINER |
|---|

| ART UNIT | PAPER NUMBER |
|---|---|
| 1725 | |

| NOTIFICATION DATE | DELIVERY MODE |
|---|---|
| 01/25/2011 | ELECTRONIC |

**Please find below and/or attached an Office communication concerning this application or proceeding.**

The time period for reply, if any, is set in the attached communication.

Notice of the Office communication was sent electronically on above-indicated "Notification Date" to the following e-mail address(es):

jxs@mmmlaw.com
ipdocket@mmmlaw.com
ppz@mmmlaw.com

UNITED STATES PATENT AND TRADEMARK OFFICE

Commissioner for Patents
United States Patent and Trademark Office
P.O. Box 1450
Alexandria, VA 22313-1450
www.uspto.gov

MORRIS MANNING MARTIN LLP
3343 PEACHTREE ROAD, NE
1600 ATLANTA FINANCIAL CENTER
ATLANTA GA 30326

| | | |
|---|---|---|
| In re Application of | : | |
| Tsai | : | DECISION ON PETITION |
| Application No. 12/981,107 | : | TO MAKE SPECIAL UNDER |
| Filed: 12/29/2010 | : | THE GREEN TECHNOLOGY |
| Attorney Docket No. **22194-77967** | : | PILOT PROGRAM |

This is a decision on the petition under 37 CFR 1.102, filed 1/11/2011, to make the above-identified application special under the pilot program for applications pertaining to Green Technologies as set forth in 74 Federal Register Notice 64666 (December 8, 2009) and amended by 75 Federal Register Notice 28554 (May 21, 2010) and 75 Federal Register Notice 69049 (November 10, 2010).

The petition is **GRANTED**.

A grantable petition to make an application special under 37 CFR 1.102 and the pilot program as set forth in 74 FR 64666 must be directed to a nonprovisional application filed under 35 USC 111(a) or be a national stage entry under 35 USC 371, exclusive of any reissue applications.

In order to qualify for special status, the following requirements must be met. 1) The application must have no more than 3 independent claims and no more than 20 total claims. 2) The application must not contain any multiple dependent claims. 3) The petition must state the basis for seeking special status, i.e., the claimed invention either: A) materially enhances the quality of the environment or B) materially contributes to: i) the discovery or development of renewable energy resources, ii) the more efficient utilization and conservation of energy resources, or iii) greenhouse gas emission reduction. 4) If the disclosure is not clear on its face that the claimed invention materially contributes under category (A) or (B), the petition must be accompanied by a statement by the applicant, assignee, or an attorney/agent registered to practice before the Office explaining how the materiality standard is met. 5) A statement that applicant will agree to make an election without traverse in a telephonic interview if a restriction requirement is made by the examiner. 6) The petition to make special must be filed electronically. 7) The petition must be filed at least one day prior to the date that a first Office Action appears in the Patent Application Information Retrieval (PAIR) system. 8) The petition must be accompanied by a

request for early publication in compliance with 37 CFR 1.219 and include the publication fee as set forth in 37 CFR 1.18(d).

The requirement for a fee for consideration of the petition to make special for applications pertaining to Green Technologies has been waived.

The instant petition complies with items 1 – 8 above. Accordingly, the above-identified application has been accorded "special" status.

Telephone inquires concerning this decision should be directed to Tom Dunn at 571-272-1171.

The application is being forwarded to the Technology Center Art Unit 1725 for action on the merits commensurate with this decision.

/Tom Dunn/

Tom Dunn
Quality Assurance Specialist
Technology Center 1700

UNITED STATES PATENT AND TRADEMARK OFFICE

Commissioner for Patents
United States Patent and Trademark Office
P.O. Box 1450
Alexandria, VA 22313-1450
www.uspto.gov

**CONLEY ROSE, P.C.**
**5601 GRANITE PARKWAY, SUITE 750**
**PLANO TX 75024**

**MAILED**

AUG 01 2011

**OFFICE OF PETITIONS**

| | | |
|---|---|---|
| In re Application of | : | |
| Robert F. Weber et al. | : | |
| Application No. 12/981,140 | : | DECISION ON PETITION |
| Filed: December 29, 2010 | : | TO WITHDRAW |
| Attorney Docket No. 4311-04303 | : | FROM RECORD |
| | : | |

This is a decision on the Request to Withdraw as attorney or agent of record under 37 C.F.R. § 1.36(b), filed July 5, 2011.

The request is **NOT APPROVED**.

The Office will no longer approve requests from practitioners to withdraw from applications where the requesting practitioner is acting, or has acted, in a representative capacity pursuant to 37 CFR 1.34. In these situations, the practitioner is responsible for the correspondence the practitioner files in the application while acting in a representative capacity. As such, there is no need for the practitioner to obtain the Office's permission to withdraw from representation. However, practitioners acting in a representative capacity, like practitioners who have a power of attorney in the application, remain responsible for noncompliance with 37 CFR 1.56, as well as 37 CFR 10.18, with respect to documents they file.

A review of the file record indicates that Kristin Jordan Harkins and all attorneys/agents associated with customer number 30652 do not have power of attorney, but has acted in a representative capacity in this patent application. See 37 C.F.R. § 10.40. Accordingly, the request to withdraw under 37 C.F.R. § 1.36(b) is not applicable.

The correspondence address has been changed and is copied below.

Telephone inquires concerning this decision should be directed to the undersigned at 571-272-4618

/Kimberly Inabinet/

Kimberly Inabinet
Petitions Examiner
Office of Petitions

cc: Vantage Industries
Attn: Robert Wadell
5070 Phillip Lee Drive
Atlanta, GA 30336

UNITED STATES PATENT AND TRADEMARK OFFICE

UNITED STATES DEPARTMENT OF COMMERCE
United States Patent and Trademark Office
Address: COMMISSIONER FOR PATENTS
P.O. Box 1450
Alexandria, Virginia 22313-1450
www.uspto.gov

| APPLICATION NO. | FILING DATE | FIRST NAMED INVENTOR | ATTORNEY DOCKET NO. | CONFIRMATION NO. |
|---|---|---|---|---|
| 12/981,166 | 12/29/2010 | Yuji Kawashima | 8073P1103 | 6036 |

| EXAMINER |
|---|
| KOONTZ, TAMMY J |

| ART UNIT | PAPER NUMBER |
|---|---|
| 3974 | |

| MAIL DATE | DELIVERY MODE |
|---|---|
| 01/23/2012 | PAPER |

7590 01/23/2012
BLAKELY SOKOLOFF TAYLOR & ZAFMAN LLP
1279 OAKMEAD PARKWAY
SUNNYVALE, CA 94085-4040

## DECISION GRANTING PETITION UNDER 37 CFR 1.138(d)

*The declaration of express abandonment is recognized*

This is in response to the petition under 37 CFR 1.138(d), requesting for a refund of any previously paid search fee and excess claims fee in the above-identified application.

The petition is granted.

The express abandonment is recognized. Any previously paid search fee and excess claims fee are hereby refunded.

Telephone inquiries should be directed to the Office of Data Management at (571) 272-4200.

Patent Publication Branch
Office of Data Management



FORM PET651G (Rev. 08/07)

**Doc Code: PET.GREEN**
**Document Description: Petition for Green Tech Pilot**

PTO/SB/420 (11-10)
Approved for use through 01/31/2011. OMB 0651-0062
U.S. Patent and Trademark Office; U. S. DEPARTMENT OF COMMERCE
Under the Paperwork Reduction Act of 1995, no persons are required to respond to a collection of information unless it displays a valid OMB control number.

# PETITION TO MAKE SPECIAL UNDER THE GREEN TECHNOLOGY PILOT PROGRAM

| | | |
|---|---|---|
| Attorney Docket Number: 0RZA-158866 | Application Number (if known): Herewith | Filing date: Herewith |
| First Named Inventor: Denis Ding | | |
| Title: CNG TIME FILL SYSTEM AND METHOD WITH SAFE FILL TECHNOLOGY | | |

**APPLICANT HEREBY REQUESTS TO PARTICIPATE IN THE GREEN TECHNOLOGY PILOT PROGRAM FOR THE ABOVE-IDENTIFIED APPLICATION. See Instruction Sheet on page 2.**

This petition must be timely filed electronically using the USPTO electronic filing system, EFS-Web.

1. By filing this petition:

   **Applicant is requesting early publication: Applicant hereby requests early publication under 37 CFR 1.219 and the publication fee set forth in 37 CFR 1.18(d) accompanies this request.**

2. By filing this petition: applicant is agreeing to make an election without traverse in a telephonic interview and elect an invention that meets the eligibility requirements for the Green Technology Pilot Program, if the Office determines that the claims are not obviously directed to a single invention. See Instruction Sheet.

3. This request is accompanied by statements of special status for the eligibility requirement.

4. The application contains no more than three (3) independent claims and twenty (20) total claims.

5. The application does not contain any multiple dependent claims.

6. Other attachments: _____

| | |
|---|---|
| Signature /DAVID E. HEISEY/ | Date December 29, 2010 |
| Name (Print/Typed) David E. Heisey | Registration Number 42,651 |

***Note:*** *Signatures of all the inventors or assignees of record of the entire interest or their representative(s) are required in accordance with 37 CFR 1.33 and 11.18. Please see 37 CFR 1.4(d) for the form of the signature. If necessary, submit multiple forms for more than one signature see below*.*

☐ *Total of _____ forms are submitted.

The information is required to obtain or retain a benefit by the public which is to file (and by the USPTO to process) an application. Confidentiality is governed by 35 U.S.C. 122 and 37 CFR 1.11 and 1.14. This collection is estimated to take 12 hours to complete, including gathering, preparing, and submitting the completed application form to the USPTO. Time will vary depending upon the individual case. Any comments on the amount of time you require to complete this form and/or suggestions for reducing this burden, should be sent to the Chief Information Officer, U.S. Patent and Trademark Office, U.S. Department of Commerce, P.O. Box 1450, Alexandria, VA 22313-1450. DO NOT SEND FEES OR COMPLETED FORMS TO THIS ADDRESS. **SEND TO: Commissioner for Patents, P.O. Box 1450, Alexandria, VA 22313-1450.**

*If you need assistance in completing the form, call 1-800-PTO-9199 and select option 2.*

Under the Paperwork Reduction Act of 1995, no persons are required to respond to a collection of information unless it displays a valid OMB control number.

# Instruction Sheet for Petition to Make Special Under the Green Technology Pilot Program

(Not to be Submitted to the USPTO)

**The following is a summary of the requirements (for more information see the notices (i) "Pilot Program for Green Technologies Including Greenhouse Gas Reduction," (ii) "Elimination of Classification Requirement in the Green Technology Pilot Program," and (iii) "Expansion and Extension of the Green Technology Pilot Program," available on the USPTO web site at http://www.uspto.gov/patents/init_events/green_tech.jsp):**

1) The application must be a non-reissue, non-provisional utility application filed under 35 U.S.C. 111 (a), or an international application that has entered the national stage in compliance with 35 U.S.C. 371, irrespective of the filing date of the application. Reexamination proceedings are excluded from this pilot program.

2) The application must contain three or fewer independent claims and twenty or fewer total claims. The application must not contain any multiple dependent claims. For an application that contains more than three independent claims or twenty total claims, or multiple dependent claims, applicant must file a preliminary amendment in compliance with 37 CFR 1.121 to cancel the excess claims and/or the multiple dependent claims at the time the petition to make special is filed.

3) The claims must be directed to a single invention that materially enhances the quality of the environment, or that materially contributes to: (1) the discovery or development of renewable energy resources; (2) the more efficient utilization and conservation of energy resources; or (3) green house gas emission reduction (see the eligibility requirements of sections II and III of the notice (i) cited above). The petition must include a statement that, if the USPTO determines that the claims are directed to multiple inventions (e.g., in a restriction requirement), applicant will agree to make an election without traverse in a telephonic interview, and elect an invention that meets the eligibility requirements in section II or III of the notice (i) cited above.

4) The petition to make special must be timely filed electronically using the USPTO electronic filing system, EFS-Web, and selecting the document description of "Petition for Green Tech Pilot" on the EFS-Web screen. Applicant should use form PTO/SB/420, which is available as a Portable Document Format (PDF) fillable form in EFS-Web and on the USPTO Web site.

5) The petition to make special must be filed at least one day prior to the date that a first Office action (which may be an Office action containing only a restriction requirement) appears in the Patent Application Information Retrieval (PAIR) system. Applicant may check the status of the application using PAIR.

6) The petition to make special must be accompanied by a request for early publication in compliance with 37 CFR 1.219 and the publication fee set forth in 37 CFR 1.18(d).

## Privacy Act Statement

The **Privacy Act of 1974 (P.L. 93-579)** requires that you be given certain information in connection with your submission of the attached form related to a patent application or patent. Accordingly, pursuant to the requirements of the Act, please be advised that: (1) the general authority for the collection of this information is 35 U.S.C. 2(b)(2); (2) furnishing of the information solicited is voluntary; and (3) the principal purpose for which the information is used by the U.S. Patent and Trademark Office is to process and/or examine your submission related to a patent application or patent. If you do not furnish the requested information, the U.S. Patent and Trademark Office may not be able to process and/or examine your submission, which may result in termination of proceedings or abandonment of the application or expiration of the patent.

The information provided by you in this form will be subject to the following routine uses:

1. The information on this form will be treated confidentially to the extent allowed under the Freedom of Information Act (5 U.S.C. 552) and the Privacy Act (5 U.S.C 552a). Records from this system of records may be disclosed to the Department of Justice to determine whether disclosure of these records is required by the Freedom of Information Act.
2. A record from this system of records may be disclosed, as a routine use, in the course of presenting evidence to a court, magistrate, or administrative tribunal, including disclosures to opposing counsel in the course of settlement negotiations.
3. A record in this system of records may be disclosed, as a routine use, to a Member of Congress submitting a request involving an individual, to whom the record pertains, when the individual has requested assistance from the Member with respect to the subject matter of the record.
4. A record in this system of records may be disclosed, as a routine use, to a contractor of the Agency having need for the information in order to perform a contract. Recipients of information shall be required to comply with the requirements of the Privacy Act of 1974, as amended, pursuant to 5 U.S.C. 552a(m).
5. A record related to an International Application filed under the Patent Cooperation Treaty in this system of records may be disclosed, as a routine use, to the International Bureau of the World Intellectual Property Organization, pursuant to the Patent Cooperation Treaty.
6. A record in this system of records may be disclosed, as a routine use, to another federal agency for purposes of National Security review (35 U.S.C. 181) and for review pursuant to the Atomic Energy Act (42 U.S.C. 218(c)).
7. A record from this system of records may be disclosed, as a routine use, to the Administrator, General Services, or his/her designee, during an inspection of records conducted by GSA as part of that agency's responsibility to recommend improvements in records management practices and programs, under authority of 44 U.S.C. 2904 and 2906. Such disclosure shall be made in accordance with the GSA regulations governing inspection of records for this purpose, and any other relevant (*i.e.*, GSA or Commerce) directive. Such disclosure shall not be used to make determinations about individuals.
8. A record from this system of records may be disclosed, as a routine use, to the public after either publication of the application pursuant to 35 U.S.C. 122(b) or issuance of a patent pursuant to 35 U.S.C. 151. Further, a record may be disclosed, subject to the limitations of 37 CFR 1.14, as a routine use, to the public if the record was filed in an application which became abandoned or in which the proceedings were terminated and which application is referenced by either a published application, an application open to public inspection or an issued patent.
9. A record from this system of records may be disclosed, as a routine use, to a Federal, State, or local law enforcement agency, if the USPTO becomes aware of a violation or potential violation of law or regulation.

Docket No.: 0RZA-158866

**IN THE UNITED STATES PATENT AND TRADEMARK OFFICE**

| | | | |
|---|---|---|---|
| In re Application of: Denis Ding | ) | Group Art Unit: | Unknown |
| Serial No.: To be Assigned | ) | Examiner: | Unknown |
| Filed: Herewith | ) | Confirmation No.: | Unknown |
| For: CNG TIME FILL SYSTEM AND METHOD WITH SAFE FILL TECHNOLOGY | ) | | |

Commissioner for Patents
P.O. Box 1450
Alexandria, VA 22313-1450

**PETITION FOR**
**STATEMENT OF SPECIAL STATUS**

Dear Sir:

Applicant submits the following Statement of Special Status. Applicant respectfully requests entry of this Statement to the Petition.

1. Applicant asserts that the claims are directed to a single invention that materially enhances the quality of the environment, and the efficient utilization and conservation of energy resources.

If the USPTO determines that the claims are directed to multiple inventions, Applicant will agree to make an election requirement without traverse in a telephonic interview and elect an invention that meets the eligibility requirements.

**CONCLUSION**

Applicant respectfully requests that this Statement be reflected in the Petition to Make Special under the Green Technology Pilot Program.

Dated: December 29, 2010

Respectfully submitted,

By: /David E. Heisey/
David E. Heisey
Registration No.: 42,651

SHEPPARD MULLIN RICHTER &
HAMPTON LLP
12275 El Camino Real, Suite 200
San Diego, CA 92130
Telephone: (858) 720-8900
Facsimile: (858) 509-3691

UNITED STATES PATENT AND TRADEMARK OFFICE

UNITED STATES DEPARTMENT OF COMMERCE
United States Patent and Trademark Office
Address: COMMISSIONER FOR PATENTS
P.O. Box 1450
Alexandria, Virginia 22313-1450
www.uspto.gov

| APPLICATION NO. | FILING DATE | FIRST NAMED INVENTOR | ATTORNEY DOCKET NO. | CONFIRMATION NO. |
|---|---|---|---|---|
| 12/981,276 | 12/29/2010 | Denis Ding | 0RZA-158866 | 6260 |

30764 7590 03/28/2011
SHEPPARD, MULLIN, RICHTER & HAMPTON LLP
12275 EL CAMINO REAL, SUITE 200
SAN DIEGO, CA 92130

| EXAMINER |
|---|

| ART UNIT | PAPER NUMBER |
|---|---|
| 3751 | |

| MAIL DATE | DELIVERY MODE |
|---|---|
| 03/28/2011 | PAPER |

**Please find below and/or attached an Office communication concerning this application or proceeding.**

The time period for reply, if any, is set in the attached communication.

UNITED STATES PATENT AND TRADEMARK OFFICE

Commissioner for Patents
United States Patent and Trademark Office
P.O. Box 1450
Alexandria, VA 22313-1450
www.uspto.gov

SHEPPARD, MULLIN, RICHTER & HAMPTON LLP
12275 EL CAMINO REAL, SUITE 200
SAN DIEGO CA 92130

| | | |
|---|---|---|
| In re Application of | : | |
| DING, DENIS | : | DECISION ON PETITION |
| Application No. 12/981,276 | : | TO MAKE SPECIAL UNDER |
| Filed: Dec. 29, 2010 | : | THE GREEN TECHNOLOGY |
| Attorney Docket No. 0RZA-158866 | : | PILOT PROGRAM |

This is a decision on the petition under 37 CFR 1.102, filed Dec, 29, 2010, to make the above-identified application special under the pilot program for applications pertaining to Green Technologies as set forth in 74 Federal Register Notice 64666 (December 8, 2009) and amended by 75 Federal Register Notice 28554 (May 21, 2010) and 75 Federal Register Notice 69049 (November 10, 2010).

The petition is **dismissed**.

If reconsideration of this decision is desired, a petition for reconsideration must be filed within ONE (1) MONTH OR THIRTY (30) DAYS from the mail date of this decision, whichever is longer. No extension of this time limit can be granted under 37 CFR 1.136(a) or (b). The petition for reconsideration should include an exhaustive attempt to provide the lacking item(s) noted below, since, after a decision on the petition for reconsideration, no further reconsideration or review of the matter will be undertaken by the Director.

A grantable petition to make an application special under 37 CFR 1.102 and the pilot program as set forth in 74 FR 64666 must be directed to a nonprovisional application filed under 35 USC 111(a) or be a national stage entry under 35 USC 371, exclusive of any reissue applications.

In order to qualify for special status, the following requirements must be met. 1) The application must have no more than 3 independent claims and no more than 20 total claims. 2) The application must not contain any multiple dependent claims. 3) The petition must state the basis for seeking special status, i.e., the claimed invention either: A) materially enhances the quality of the environment or B) materially contributes to: i) the discovery or development of renewable energy resources, ii) the more efficient utilization and conservation of energy resources, or iii) greenhouse gas emission reduction. 4) If the disclosure is not clear on its face that the claimed

invention materially contributes under category (A) or (B), the petition must be accompanied by a statement by the applicant, assignee, or an attorney/agent registered to practice before the Office explaining how the materiality standard is met. 5) A statement that applicant will agree to make an election without traverse in a telephonic interview if a restriction requirement is made by the examiner. 6) The petition to make special must be filed electronically. 7) The petition must be filed at least one day prior to the date that a first Office Action appears in the Patent Application Information Retrieval (PAIR) system. 8) The petition must be accompanied by a request for early publication in compliance with 37 CFR 1.219 and include the publication fee as set forth in 37 CFR 1.18(d).

The requirement for a fee for consideration of the petition to make special for applications pertaining to Green Technologies has been waived.

The petition lacks item # 4.

In regard to item 4, petitioner should note that the instant petition includes a statement identifying the basis for the special status (i.e., whether the instant invention (1) materially enhances the quality of the environment or materially contributes to (2) development of renewable energy resources or energy conservation, or (3) greenhouse gas reduction) as required by sections II and III of the notice. However, as stated in the notice, applicant must also provide a statement pertaining to the materiality standard if the application disclosure is not clear on its face as to the materiality of the basis for the special status of the invention. This petition lacks such a statement and it is not agreed that the application on its face meets that materiality standard. Petitioner states that the claimed invention relates to green technology. This is not convincing. It is not clear how the claimed an automatic shut-off valve to selectively stop the gas flow into a manifold time fill system will provide and enhance the quality of the environment or contribute to development of renewable energy resources or energy conservation or greenhouse gas reduction. There is no relationship between the statement and the claimed subject matter.

Any reconsideration of this decision should be submitted through the USPTO electronic filing system, EFS-Web, and selecting the document description of "Petition for Green Tech Pilot" on the EFS-Web screen.

Telephone inquiries concerning this decision should be directed to Henry C. Yuen at 571-272-4856.

The application is undergoing pre-examination processing. Upon completion, the application will be forwarded to the Technology Center Art Unit 3751 for action in its regular turn.

/Henry C. Yuen/

Henry C. Yuen
Quality Assurance Specialist
Technology Center 3700

Docket No.: 0RZA-158866

**IN THE UNITED STATES PATENT AND TRADEMARK OFFICE**

| | | | |
|---|---|---|---|
| In re Application of: Denis Ding | ) | Group Art Unit: | 3751 |
| Serial No.: 12/981,276 | ) | Examiner: | Unknown |
| Filed: December 29, 2010 | ) | Confirmation No.: | 6260 |
| For: CNG TIME FILL SYSTEM AND METHOD WITH SAFE FILL TECHNOLOGY | ) | | |

Commissioner for Patents
P.O. Box 1450
Alexandria, VA 22313-1450

**REQUEST FOR RECONSIDERATION**

Commissioner for Patents
P.O. Box 1451
Alexandria, VA 22313-1451

Dear Sir:

1. Applicant hereby responds to the Communication dated March 18, 2011, in which the Petition under 37 CFR 1.102, filed on December 29, 2010 was dismissed. Applicant respectfully requests reconsideration in light of the additional Statement of Special Status set forth below.

1. Applicant asserts that the claims are directed to a single invention that materially enhances the quality of the environment, and the efficient utilization and conservation of energy resources. In particular, the invention provides a time fill CNG refueling station with safe fill technology for measuring and checking for steady static pressure on a time fill manifold system periodically throughout the filling process. This provides the ability to incorporate safety

measures to protect against gas leaks due to broken fittings, hoses or vehicles having onboard gas leaks, thus significantly increasing energy efficiency, conserving energy resources by eliminating gas leaks, and enhancing the quality of the environment by reducing pollution.

2. If the USPTO determines that the claims are directed to multiple inventions, Applicant will agree to make an election requirement without traverse in a telephonic interview and elect an invention that meets the eligibility requirements.

## CONCLUSION

Applicant respectfully requests that this Statement be reflected in the Petition to Make Special under the Green Technology Pilot Program. As such, reconsideration of this Petition is respectfully requested.

Dated: April 4, 2011

Respectfully submitted,

By: /David E. Heisey/
David E. Heisey
Registration No.: 42,651

SHEPPARD MULLIN RICHTER &
HAMPTON LLP
12275 El Camino Real, Suite 200
San Diego, CA 92130
Telephone: (858) 720-8900
Facsimile: (858) 509-3691

UNITED STATES PATENT AND TRADEMARK OFFICE

UNITED STATES DEPARTMENT OF COMMERCE
United States Patent and Trademark Office
Address: COMMISSIONER FOR PATENTS
P.O. Box 1450
Alexandria, Virginia 22313-1450
www.uspto.gov

| APPLICATION NO. | FILING DATE | FIRST NAMED INVENTOR | ATTORNEY DOCKET NO. | CONFIRMATION NO. |
|---|---|---|---|---|
| 12/981,276 | 12/29/2010 | Denis Ding | 0RZA-158866 | 6260 |

30764 7590 04/26/2011
SHEPPARD, MULLIN, RICHTER & HAMPTON LLP
12275 EL CAMINO REAL, SUITE 200
SAN DIEGO, CA 92130

| EXAMINER |
|---|

| ART UNIT | PAPER NUMBER |
|---|---|
| 3751 | |

| MAIL DATE | DELIVERY MODE |
|---|---|
| 04/26/2011 | PAPER |

**Please find below and/or attached an Office communication concerning this application or proceeding.**

The time period for reply, if any, is set in the attached communication.

UNITED STATES PATENT AND TRADEMARK OFFICE

Commissioner for Patents
United States Patent and Trademark Office
P.O. Box 1450
Alexandria, VA 22313-1450
www.uspto.gov

SHEPPARD, MULLIN, RICHTER & HAMPTON LLP
12275 EL CAMINO REAL, SUITE 200
SAN DIEGO CA 92130

| | | |
|---|---|---|
| In re Application of | : | |
| DING, DENIS | : | DECISION ON PETITION |
| Application No. 12/981,276 | : | TO MAKE SPECIAL UNDER |
| Filed: Dec. 29, 2010 | : | THE GREEN TECHNOLOGY |
| Attorney Docket No. 0RZA-158866 | : | PILOT PROGRAM |

This is a decision on the renewed petition under 37 CFR 1.102, filed April 4, 2011, to make the above-identified application special under the pilot program for applications pertaining to Green Technologies as set forth in 74 Federal Register Notice 64666 (December 8, 2009) and amended by 75 Federal Register Notice 28554 (May 21, 2010) and 75 Federal Register Notice 69049 (November 10, 2010).

The petition is **denied**.

If reconsideration of this decision is desired, a petition for reconsideration must be filed within ONE (1) MONTH OR THIRTY (30) DAYS from the mail date of this decision, whichever is longer. No extension of this time limit can be granted under 37 CFR 1.136(a) or (b). The petition for reconsideration should include an exhaustive attempt to provide the lacking item(s) noted below, since, after a decision on the petition for reconsideration, no further reconsideration or review of the matter will be undertaken by the Director.

A grantable petition to make an application special under 37 CFR 1.102 and the pilot program as set forth in 74 FR 64666 must be directed to a nonprovisional application filed under 35 USC 111(a) or be a national stage entry under 35 USC 371, exclusive of any reissue applications.

In order to qualify for special status, the following requirements must be met. 1) The application must have no more than 3 independent claims and no more than 20 total claims. 2) The application must not contain any multiple dependent claims. 3) The petition must state the basis for seeking special status, i.e., the claimed invention either: A) materially enhances the quality of the environment or B) materially contributes to: i) the discovery or development of renewable energy resources, ii) the more efficient utilization and conservation of energy resources, or iii) greenhouse gas emission reduction. 4) If the disclosure is not clear on its face that the claimed invention materially contributes under category (A) or (B), the petition must be accompanied by a statement by the applicant, assignee, or an attorney/agent registered to practice before the

Office explaining how the materiality standard is met. 5) A statement that applicant will agree to make an election without traverse in a telephonic interview if a restriction requirement is made by the examiner. 6) The petition to make special must be filed electronically. 7) The petition must be filed at least one day prior to the date that a first Office Action appears in the Patent Application Information Retrieval (PAIR) system. 8) The petition must be accompanied by a request for early publication in compliance with 37 CFR 1.219 and include the publication fee as set forth in 37 CFR 1.18(d).

The requirement for a fee for consideration of the petition to make special for applications pertaining to Green Technologies has been waived. The petition lacks item # 4.

In regard to item 4, petitioner should note that the instant petition includes a statement identifying the basis for the special status (i.e., whether the instant invention (1) materially enhances the quality of the environment or materially contributes to (2) development of renewable energy resources or energy conservation, or (3) greenhouse gas reduction) as required by sections II and III of the notice. However, as stated in the notice, applicant must also provide a statement pertaining to the materiality standard if the application disclosure is not clear on its face as to the materiality of the basis for the special status of the invention. This petition lacks such a statement and it is not agreed that the application on its face meets that materiality standard. In the renewed petition, petitioner argues that the claimed invention relates to safety measures against leakage due to broken fittings to enhance the quality of environment and conservation of energy. This line of arguments is not persuasive because the claims are directed to an automatic shut-off valve to selectively stop the gas flow into a manifold time fill system which has no direct relations with the quality of the environment or development of renewable energy resources or energy conservation or greenhouse gas reduction.

Under the circumstances, the request to make the above-identified application special under the pilot program for applications pertaining to Green Technologies cannot be granted.

Telephone inquiries concerning this decision should be directed to Henry C. Yuen at 571-272-4856. The application is being forwarded to the Technology Center Art Unit 3751 for action in its regular turn.

Since this is a decision for reconsideration, no further reconsideration or review of the matter will be undertaken by the Director.

/Henry C. Yuen/

Henry C. Yuen
Quality Assurance Specialist
Technology Center 3700

The application is undergoing pre-examination processing. Upon completion, the application will be forwarded to the Technology Center Art Unit 3751 for action in its regular turn.

/Henry C. Yuen/

Henry C. Yuen
Quality Assurance Specialist
Technology Center 3700

UNITED STATES PATENT AND TRADEMARK OFFICE

Commissioner for Patents
United States Patent and Trademark Office
P.O. Box 1450
Alexandria, VA 22313-1450
www.uspto.gov

MAILED
SEP 06 2011
OFFICE OF PETITIONS

Krieg DeVault LLP
One Indiana Square
Suite 2800
Indianapolis IN 46204

| | | |
|---|---|---|
| In re Application of | : | |
| Loebig et al. | : | DECISION GRANTING STATUS |
| Application No.: 12/981,317 | : | UNDER 37 CFR 1.47(a) |
| Filed: December 29, 2010 | : | |
| Attorney Docket No.: RORO-01171 | : | |

This is a decision on the petition under 37 CFR 1.47(b), filed August 17, 2011, which is being treated under 37 CFR 1.147(a).

Petitioners are reminded that when one joint inventor signs, the provisions of 37 CFR 1.47(a) apply. Where 37 CFR 1.47(a) is available, application cannot be made under 37 CFR 1.47(b). MPEP 409.03(b)

The petition under 37 CFR 1.47(a) is **GRANTED**.

Petitioners have shown that the non-signing inventor, Jefre H. Cockerham, has constructively refused to join in the filing of the above-identified application.

The application and papers have been reviewed and found in compliance with 37 CFR 1.47(a). This application is hereby accorded Rule 1.47(a) status. Pursuant to petitioners' authorization, deposit account no. 12-2424 will be charged the $200.00 Rule 1.47(a) petition fee.

As provided in 37 CFR 1.47(c), this Office will forward notice of this application's filing to the non-signing inventor at the address given in the petition. Notice of the filing of this application will also be published in the Official Gazette.

This application is being referred to the Office of Patent Application Processing for further pre-examination processing.

Telephone inquiries should be directed to the undersigned at (571) 272-3230.

Shirene Willis Brantley
Senior Petitions Attorney
Office of Petitions

PTO/SB/20PCT-US (09-10)
Approved for use through 01/31/2012. OMB 0651-0058
U.S. Patent and Trademark Office; U. S. DEPARTMENT OF COMMERCE
Under the Paperwork Reduction Act of 1995, no persons are required to respond to a collection of information unless it displays a valid OMB control number.

# REQUEST FOR PARTICIPATION IN THE PATENT COOPERATION TREATY - PATENT PROSECUTION HIGHWAY (PCT-PPH) PILOT PROGRAM IN A U.S. APPLICATION WHERE THE USPTO WAS THE ISA OR IPEA

| | | | |
|---|---|---|---|
| Application No: | 12/981,336 | Filing date: | December 29, 2010 |
| First Named Inventor: | David A. Ferrera | | |
| Title of the Invention: | Method for Providing Progressive Therapy for Thrombus Management | | |

**THIS REQUEST FOR PARTICIPATION IN THE PCT-PPH PILOT PROGRAM ALONG WITH THE REQUIRED DOCUMENTS MUST BE SUBMITTED VIA EFS-WEB. INFORMATION REGARDING EFS-WEB IS AVAILABLE AT HTTP://WWW.USPTO.GOV/EBC/EFS_HELP.HTML**

**APPLICANT HEREBY REQUESTS PARTICIPATION IN THE PCT-PPH PROGRAM AND PETITIONS TO MAKE THE ABOVE-IDENTIFIED APPLICATION SPECIAL UNDER THE PCT-PPH PROGRAM.**

The above-identified application is (1) a national stage entry of the corresponding PCT application, or (2) a national stage entry of another PCT application which claims priority to the corresponding PCT application, or (3) a national application that claims domestic/ foreign priority to the corresponding PCT application, or (4) a national application which forms the basis for the priority claim in the corresponding PCT application, or (5) a continuing application of a U.S. application that satisfies one of (1) to (4) above, or (6) a U.S. application that claims domestic benefit to a U.S. provisional application which forms the basis for the priority claim in the corresponding PCT application.

**The corresponding PCT application number(s) is/are:** PCT/US2010/062532

**The international date of the corresponding PCT application(s) is/are:** December 30, 2010

**I. List of Required Documents:**

a. **A copy of the latest international work product (WO/ISA, WO/IPEA, or IPER) in the above–identified corresponding PCT application(s)**

- [x] Is attached
- [ ] Is not attached because the document is already in the U.S. application.

b. **A copy of all claims which were indicated as having novelty, inventive step and industrial applicability in the above-identified corresponding PCT application(s).**

- [x] Is attached.
- [ ] Is not attached because the document is already in the U.S. application.

c. **English translations of the documents in a. and b. above are attached (if the documents are not in the English language). A statement that the English translation is accurate is attached for the document in b. above.**



This collection of information is required by 35 U.S.C. 119, 37 CFR 1.55, and 37 CFR 1.102(d). The information is required to obtain or retain a benefit by the public, which is to file (and by the USPTO to process) an application. Confidentiality is governed by 35 U.S.C. 122 and 37 CFR 1.11 and 1.14. This collection is estimated to take 2 hours to complete, including gathering, preparing, and submitting the completed application form to the USPTO. Time will vary depending upon the individual case. Any comments on the amount of time you require to complete this form and/or suggestions for reducing this burden should be sent to the Chief Information Officer, U.S. Patent and Trademark Office, U.S. Department of Commerce, P.O. Box 1450, Alexandria, VA 22313-1450. DO NOT SEND FEES OR COMPLETED FORMS TO THIS ADDRESS.

Under the Paperwork Reduction Act of 1995, no persons are required to respond to a collection of information unless it displays a valid OMB control number.

# REQUEST FOR PARTICIPATION IN THE PCT-PPH PILOT PROGRAM IN A U.S. APPLICATION WHERE THE USPTO WAS THE ISA OR IPEA

(continued)

| | |
|---|---|
| Application No.: | 12/981336 |
| First Named Inventor: | David A. Ferrera |

d. **(1) An information disclosure statement listing the documents cited in the international work products (ISR, WO/ISA, WO/IPEA, IPER) of the corresponding PCT application.**

☐ Is attached

☒ Has already been filed in the above-identified U.S. application on 02/22/2011, 04/19/2011

**(2) Copies of all documents (except) for U.S. patents or U.S. patent application publications)**

☐ Are attached.

☒ Have already been filed in the above-identified U.S. application on 04/19/2011

**II. Claims Correspondence Table:**

| Claims in US Application | Patentable Claims in the corresponding PCT Application | Explanation regarding the correspondence |
|---|---|---|
| 1-10 | 54-63 | Identical |
| 11-21 | - | Canceled |
| 22, 23 | 54 | Depend from Claim 54 (e.g., narrower in scope) |
| 24 | 57 | Depends from Claim 57 (e.g., narrower in scope) |
| 25 | 58 | Depends from Claim 58 (e.g., narrower in scope) |
| 26-28 | 54 | Depend from Claim 54 (e.g., narrower in scope) |
| 29 | 54 | Depends indirectly from Claim 54 (e.g., narrower in scope) |
| 30-34 | 54 | Depend from Claim 54 (e.g., narrower in scope) |
| | | |
| | | |
| | | |
| | | |
| | | |
| | | |
| | | |
| | | |
| | | |
| | | |
| | | |

**III. All the claims in the US application sufficiently correspond to the patentable claims in the corresponding PCT application.**

| | |
|---|---|
| Signature /Michael R. Christensen/ | Date May 3, 2011 |
| Name (Print/Typed) Michael R. Christensen | Registration Number 57505 |

# Privacy Act Statement

The **Privacy Act of 1974 (P.L. 93-579)** requires that you be given certain information in connection with your submission of the attached form related to a patent application or patent. Accordingly, pursuant to the requirements of the Act, please be advised that: (1) the general authority for the collection of this information is 35 U.S.C. 2(b)(2); (2) furnishing of the information solicited is voluntary; and (3) the principal purpose for which the information is used by the U.S. Patent and Trademark Office is to process and/or examine your submission related to a patent application or patent. If you do not furnish the requested information, the U.S. Patent and Trademark Office may not be able to process and/or examine your submission, which may result in termination of proceedings or abandonment of the application or expiration of the patent.

The information provided by you in this form will be subject to the following routine uses:

1. The information on this form will be treated confidentially to the extent allowed under the Freedom of Information Act (5 U.S.C. 552) and the Privacy Act (5 U.S.C 552a). Records from this system of records may be disclosed to the Department of Justice to determine whether disclosure of these records is required by the Freedom of Information Act.
2. A record from this system of records may be disclosed, as a routine use, in the course of presenting evidence to a court, magistrate, or administrative tribunal, including disclosures to opposing counsel in the course of settlement negotiations.
3. A record in this system of records may be disclosed, as a routine use, to a Member of Congress submitting a request involving an individual, to whom the record pertains, when the individual has requested assistance from the Member with respect to the subject matter of the record.
4. A record in this system of records may be disclosed, as a routine use, to a contractor of the Agency having need for the information in order to perform a contract. Recipients of information shall be required to comply with the requirements of the Privacy Act of 1974, as amended, pursuant to 5 U.S.C. 552a(m).
5. A record related to an International Application filed under the Patent Cooperation Treaty in this system of records may be disclosed, as a routine use, to the International Bureau of the World Intellectual Property Organization, pursuant to the Patent Cooperation Treaty.
6. A record in this system of records may be disclosed, as a routine use, to another federal agency for purposes of National Security review (35 U.S.C. 181) and for review pursuant to the Atomic Energy Act (42 U.S.C. 218(c)).
7. A record from this system of records may be disclosed, as a routine use, to the Administrator, General Services, or his/her designee, during an inspection of records conducted by GSA as part of that agency's responsibility to recommend improvements in records management practices and programs, under authority of 44 U.S.C. 2904 and 2906. Such disclosure shall be made in accordance with the GSA regulations governing inspection of records for this purpose, and any other relevant ( *i.e.*, GSA or Commerce) directive. Such disclosure shall not be used to make determinations about individuals.
8. A record from this system of records may be disclosed, as a routine use, to the public after either publication of the application pursuant to 35 U.S.C. 122(b) or issuance of a patent pursuant to 35 U.S.C. 151. Further, a record may be disclosed, subject to the limitations of 37 CFR 1.14, as a routine use, to the public if the record was filed in an application which became abandoned or in which the proceedings were terminated and which application is referenced by either a published application, an application open to public inspection or an issued patent.
9. A record from this system of records may be disclosed, as a routine use, to a Federal, State, or local law enforcement agency, if the USPTO becomes aware of a violation or potential violation of law or regulation.

# PATENT COOPERATION TREATY

From the
INTERNATIONAL SEARCHING AUTHORITY

To: MICHAEL CHRISTENSEN
KNOBBE, MARTENS, OLSON & BEAR, LLP
2040 MAIN STREET, 14TH FLOOR
IRVINE, CA 92614

# PCT

WRITTEN OPINION OF THE
INTERNATIONAL SEARCHING AUTHORITY

(PCT Rule 43*bis*.1)

| | |
|---|---|
| Date of mailing *(day/month/year)* | 09 MAR 2011 |
| Applicant's or agent's file reference<br>MDFR-1P1P1WO | **FOR FURTHER ACTION**<br>See paragraph 2 below |

| International application No. | International filing date *(day/month/year)* | Priority date *(day/month/year)* |
|---|---|---|
| PCT/US2010/062532 | 30 December 2010 | 31 December 2009 |

International Patent Classification (IPC) or both national classification and IPC
IPC(8) - A61B 17/22 (2011.01)
USPC - 606/159

Applicant MINDFRAME, INC.

1. This opinion contains indications relating to the following items:

- [x] Box No. I Basis of the opinion
- [ ] Box No. II Priority
- [x] Box No. III Non-establishment of opinion with regard to novelty, inventive step and industrial applicability
- [ ] Box No. IV Lack of unity of invention
- [x] Box No. V Reasoned statement under Rule 43*bis*.1(a)(i) with regard to novelty, inventive step or industrial applicability; citations and explanations supporting such statement
- [ ] Box No. VI Certain documents cited
- [ ] Box No. VII Certain defects in the international application
- [ ] Box No. VIII Certain observations on the international application

2. **FURTHER ACTION**

If a demand for international preliminary examination is made, this opinion will be considered to be a written opinion of the International Preliminary Examining Authority ("IPEA") except that this does not apply where the applicant chooses an Authority other than this one to be the IPEA and the chosen IPEA has notified the International Bureau under Rule 66.1*bis*(b) that written opinions of this International Searching Authority will not be so considered.

If this opinion is, as provided above, considered to be a written opinion of the IPEA, the applicant is invited to submit to the IPEA a written reply together, where appropriate, with amendments, before the expiration of 3 months from the date of mailing of Form PCT/ISA/220 or before the expiration of 22 months from the priority date, whichever expires later.

For further options, see Form PCT/ISA/220.

3. For further details, see notes to Form PCT/ISA/220.

| Name and mailing address of the ISA/US | Date of completion of this opinion | Authorized officer: |
|---|---|---|
| Mail Stop PCT, Attn: ISA/US<br>Commissioner for Patents<br>P.O. Box 1450, Alexandria, Virginia 22313-1450<br>Facsimile No. 571-273-3201 | 15 February 2011 | Blaine R. Copenheaver<br>PCT Helpdesk: 571-272-4300<br>PCT OSP: 571-272-7774 |

**WRITTEN OPINION OF THE INTERNATIONAL SEARCHING AUTHORITY**

International application No.
PCT/US2010/062532

**Box No. I Basis of this opinion**

1. With regard to the **language**, this opinion has been established on the basis of:

   ☒ the international application in the language in which it was filed.

   ☐ a translation of the international application into _____ which is the language of a translation furnished for the purposes of international search (Rules 12.3(a) and 23.1(b)).

2. ☐ This opinion has been established taking into account the **rectification of an obvious mistake** authorized by or notified to this Authority under Rule 91 (Rule 43*bis*.1(a))

3. With regard to any **nucleotide and/or amino acid sequence** disclosed in the international application, this opinion has been established on the basis of a sequence listing filed or furnished:

   a. (means)

   ☐ on paper

   ☐ in electronic form

   b. (time)

   ☐ in the international application as filed

   ☐ together with the international application in electronic form

   ☐ subsequently to this Authority for the purposes of search

4. ☐ In addition, in the case that more than one version or copy of a sequence listing has been filed or furnished, the required statements that the information in the subsequent or additional copies is identical to that in the application as filed or does not go beyond the application as filed, as appropriate, were furnished.

5. Additional comments:

**WRITTEN OPINION OF THE INTERNATIONAL SEARCHING AUTHORITY**

International application No.
PCT/US2010/062532

**Box No. III Non-establishment of opinion with regard to novelty, inventive step and industrial applicability**

The questions whether the claimed invention appears to be novel, to involve an inventive step (to be non obvious), or to be industrially applicable have not been examined in respect of:

☐ the entire international application.

☒ claims Nos. 49-53, 102

because:

☐ the said international application, or the said claims Nos. _____ relate to the following subject matter which does not require an international search *(specify)*:

☒ the description, claims or drawings *(indicate particular elements below)* or said claims Nos. 49-53, 102 are so unclear that no meaningful opinion could be formed *(specify)*:

Claims 49-53, and 102 are multiple dependent claims not drafted in accordance with the second and third sentences of Rule 6.4(a).

☐ the claims, or said claims Nos. _____ are so inadequately supported by the description that no meaningful opinion could be formed *(specify)*:

☒ no international search report has been established for said claims Nos. 49-53, 102

☐ a meaningful opinion could not be formed without the sequence listing; the applicant did not, within the prescribed time limit:

☐ furnish a sequence listing on paper complying with the standard provided for in Annex C of the Administrative Instructions, and such listing was not available to the International Searching Authority in a form and manner acceptable to it.

☐ furnish a sequence listing in electronic form complying with the standard provided for in Annex C of the Administrative Instructions, and such listing was not available to the International Searching Authority in a form and manner acceptable to it.

☐ pay the required late furnishing fee for the furnishing of a sequence listing in response to an invitation under Rule 13*ter*.1(a) or (b).

☐ See Supplemental Box for further details.

**WRITTEN OPINION OF THE INTERNATIONAL SEARCHING AUTHORITY**

International application No.
PCT/US2010/062532

**Box No. V** **Reasoned statement under Rule 43*bis*.1(a)(i) with regard to novelty, inventive step or industrial applicability; citations and explanations supporting such statement**

1. Statement

| | | | |
|---|---|---|---|
| Novelty (N) | Claims | 1-48, 54-101, 103-104 | YES |
| | Claims | None | NO |
| Inventive step (IS) | Claims | 1-48, 54-101, 103-104 | YES |
| | Claims | None | NO |
| Industrial applicability (IA) | Claims | 1-48, 54-101, 103-104 | YES |
| | Claims | None | NO |

2. Citations and explanations:

Claims 1, 33, 34, 54, 64, 73,,77, 83 and 92 meet the criteria set out in PCT Article 33(2)-(3) because the prior art does not teach or fairly suggest certain subject matter in the claims, as follows:

Regarding claim 1, the prior art of record, individually or in combination, does not teach or fairly suggest an expandable tip assembly adapted to address an occlusive thrombus within a blood vessel without distal embolic protection, comprising a variable-stiffness hypotube, a distal portion and a lumen sized and adapted to receive a guidewire; an expandable and reconstrainable scaffold coupled to the distal end of the hypotube, the scaffold being adapted to radially self-expand from a non-expanded configuration to an expanded configuration upon unsheathing of the scaffold and to transition from the expanded configuration to the non-expanded configuration upon resheathing of the scaffold; wherein the scaffold comprises a generally cylindrical configuration; wherein the scaffold comprises a laser-cut tube; wherein the scaffold comprises an open distal end without a distal embolic protection member or device; wherein a proximal end of the scaffold comprises a cut-out section adapted to facilitate re-sheathing of the scaffold; wherein the scaffold comprises a plurality of open cells defined by struts and connected by bridges; a variable-stiffness hypotube wherein the distal portion of the hypotube has a greater flexibility than the proximal portion; wherein the greater flexibility is provided by spiral laser cuts spaced along the distal portion of the hypotube; wherein each strut has two ends, with each end connected to one of the bridges; wherein the scaffold has a chronic outward force (COF) per unit length that does not decrease by more than 75% from an expansion diameter of 1.5 mm to an expansion diameter of 4.5 mm; and wherein the open cells are sized to promote at least one of vessel reperfusion or thrombus removal wherein the spacing between the spiral cuts decreases from a proximal end of the distal portion to a distal end of the distal portion.

Regarding claim 33, the prior art of record, individually or in combination, does not teach or fairly suggest an expandable tip assembly configured to address an occlusive thrombus within a blood vessel without distal embolic protection, comprising an elongate member; an expandable and reconstrainable scaffold coupled to the distal end of the hypotube, the scaffold being adapted to radially self-expand from a non-expanded configuration to an expanded configuration and to transition from the expanded configuration to the non-expanded configuration upon unsheathing and re-sheathing of the scaffold; wherein the scaffold comprises a laser-cut tube; wherein the scaffold is coupled to the distal end of the elongate member by a plurality of tether lines; wherein the scaffold comprises an open distal end without a distal embolic protection member or device; wherein the scaffold comprises a plurality of open cells defined by struts and connected by bridges, a proximal end of the scaffold comprises a scooped-out section configured to facilitate re-sheathing of the scaffold; wherein each strut has two ends, with each end connected to one of the bridges; and wherein the open cells are sized to promote at least one of vessel reperfusion or thrombus removal.

Regarding claim 34, the prior art of record, individually or in combination, does not teach or fairly suggest a system comprising a plurality of expandable tip assemblies configured to address an occlusive thrombus within a blood vessel for providing progressive therapy without distal embolic protection, the system comprising a first expandable tip assembly comprising a first elongate member and a first self-expanding scaffold; wherein the first self-expanding scaffold is coupled to a distal end of the first elongate member; wherein the first self-expanding scaffold comprises an open distal end without a distal embolic protection member or device; wherein the first self-expanding scaffold comprises open cells formed by a pattern of struts and bridges, wherein said cells have a cell size configured to hinder penetration of thrombus material within the first self-expanding scaffold, thereby increasing an amount of blood flow through the first self-expanding scaffold; and a second expandable tip assembly comprising a second elongate member and a second self-expanding scaffold; herein the second self-expanding scaffold is coupled to a distal end of the second elongate member; wherein the second self-expanding scaffold comprises an open distal end without a distal embolic protection member or device; wherein the second self-expanding scaffold comprises open cells formed by a pattern of struts and bridges, wherein said cells have a cell size larger than the cell size of the first self-expanding scaffold, wherein said cell size of the second self-expanding scaffold is configured to enhance penetration of thrombus material within the scaffold to facilitate capture of the thrombus; wherein, in use, the first self-expanding scaffold and the second self-expanding scaffold are adapted to radially self-expand from a non-expanded configuration to an expanded configuration and to transition from the expanded configuration to the nonexpanded configuration upon unsheathing and re-sheathing of the first and second selfexpanding scaffolds.

**Supplemental Box**

**In case the space in any of the preceding boxes is not sufficient.**
Continuation of:

Regarding claim 54, the prior art of record, individually or in combination, does not teach or fairly suggest a method of using a plurality of expandable tip assemblies adapted to address an occlusive thrombus within a blood vessel for providing progressive therapy, the method comprising identifying a thrombus within a blood vessel; inserting an expandable reperfusion device within the blood vessel to the location of the thrombus, wherein the expandable reperfusion device comprises an expandable reperfusion scaffold having a plurality of interconnected struts that form cells having a cell size that is sized and configured to reduce protrusion of the thrombus within the reperfusion scaffold, thereby increasing a diameter of a flow path established by the reperfusion scaffold; deploying the reperfusion device within the thrombus, thereby compressing the thrombus against the inner vessel wall and establishing one or more blood flow channels through the thrombus, wherein the one or more blood flow channels facilitate natural lysis of the thrombus; removing the reperfusion device; inserting an expandable thrombus removal device within the blood vessel to the location ofthe thrombus, wherein the expandable thrombus removal device comprises an expandable removal scaffold having a plurality of interconnected struts that form cells having a cell size that is sized and configured to allow thrombus penetration within the cells, thereby facilitating engagement ofthe thrombus by the removal scaffold; deploying the thrombus removal device within a remaining portion of the thrombus, thereby engaging the remaining portion of the thrombus; extracting the remaining portion of the thrombus engaged by the thrombus removal device from the blood vessel; and removing the thrombus removal device.

Regarding claim 64, the prior art of record, individually or in combination, does not teach or fairly suggest a method of using a plurality of expandable tip assemblies adapted to address an occlusive thrombus within a blood vessel for providing progressive therapy, the method comprising inserting an expandable reperfusion device within an occluded blood vessel having a thrombus; positioning the expandable reperfusion device to span at least a portion of a length ofthe thrombus; wherein the expandable reperfusion device comprises a self-expanding reperfusion scaffold having a plurality of interconnected struts that form cells sized and configured to inhibit protrusion of the thrombus into the reperfusion scaffold, thereby increasing a diameter of a flow path established by the reperfusion scaffold; deploying the reperfusion device within the thrombus, thereby compressing the thrombus against the inner vessel wall and establishing blood flow through the occluded blood vessel, wherein the established blood flow facilitates natural lysis ofthe thrombus; macerating the thrombus; wherein at least one ofthe natural lysis and the maceration fragment the thrombus until only a portion ofthe thrombus remains; removing the reperfusion device; inserting a thrombus removal device within the blood vessel to span at least a portion of a length of the remaining thrombus, wherein the thrombus removal device comprises a self-expanding removal scaffold having a plurality of interconnected struts that form cells having a cell size that is sized and configured to allow thrombus protrusion within the cells, thereby facilitating engagement ofthe remaining thrombus by the removal scaffold; deploying the thrombus removal device within the remaining thrombus to engage the remaining thrombus; and removing the thrombus removal device, thereby extracting the remaining thrombus.

Regarding claim 73, the prior art of record, individually or in combination, does not teach or fairly suggest a thrombus management method for addressing an occlusive thrombus within a blood vessel without distal embolic protection, the method comprising: identifying a cerebral artery having an occlusive thrombus; inserting a guide catheter into a patient; inserting a guide wire through the guide catheter into the cerebral artery and through the thrombus; inserting a microcatheter over the guidewire and through the thrombus; positioning a distal end of the microcatheter within about a centimeter past the thrombus; inserting an expandable tip assembly comprising a scaffold through the microcatheter; retracting the microcatheter, thereby causing the scaffold to expand; wherein said expansion compresses the thrombus against a wall of the cerebral artery; wherein said compression of the thrombus restores blood flow within the cerebral artery; wherein said restored blood flow facilitates natural lysis ofthe thrombus; and macerating the thrombus by resheathing the scaffold and unsheathing the scaffold, thereby facilitating mechanical lysis and fragmentation of the thrombus to release embolic particles; wherein the embolic particles flow in the direction of the blood flow and are not captured by any distal embolic protection member, but are instead lysed through the natural lysis process due to the restored blood flow.

Regarding claim 77, the prior art of record, individually or in combination, does not teach or fairly suggest a thrombus management method for addressing an occlusive thrombus within a blood vessel, the method comprising identifying an occluded blood vessel having an occlusive thrombus; selecting an expandable tip assembly based, at least in part, on a diameter of the identified occluded blood vessel, the expandable tip assembly comprising a proximal elongate member and a distal self-expanding scaffold; inserting the selected expandable tip assembly within the occluded vessel through a microcatheter such that the self-expanding scaffold is positioned at a location of the thrombus in a non-expanded configuration; retracting the microcatheter, thereby causing the scaffold to expand to an expanded configuration; wherein said expansion compresses the thrombus against a wall of the blood vessel; wherein said compression of the thrombus restores blood flow within the blood vessel; wherein said restored blood flow facilitates natural lysis of the thrombus; and macerating the thrombus by resheathing the self-expanding scaffold and unsheathing the self-expanding scaffold within the microcatheter, thereby facilitating mechanical lysis and fragmentation of the thrombus.

Regarding claim 83, the prior art of record, individually or in combination, does not teach or fairly suggest a thrombus management method for addressing an occlusive thrombus within a blood vessel by providing multiple layer embolus removal, comprising identifying an embolus within a cerebral artery; inserting an expandable reperfusion device within the cerebral artery to the location of the embolus; expanding the reperfusion device within the embolus, thereby establishing one or more blood flow channels through the embolus, wherein the one or more blood flow channels facilitate natural lysis of the embolus to remove one or more outer layers of the embolus; removing the reperfusion device; inserting an expandable embolus removal device within the cerebral artery to the location of the embolus; expanding the embolus removal device within a remaining portion of the embolus, thereby engaging the remaining portion of the embolus; extracting the remaining portion of the embolus with the embolus removal device from the cerebral artery; and removing the embolus removal device.

**Supplemental Box**

**In case the space in any of the preceding boxes is not sufficient.**
Continuation of:

Regarding claim 92, the prior art of record, individually or in combination, does not teach or fairly suggest a thrombus management method for addressing an occlusive thrombus within a blood vessel by providing multiple layer embolus removal from a cerebral artery, comprising identifying an embolus within a cerebral artery; wherein the embolus comprises an outer layer and an inner core; establishing one or more blood flow channels through the embolus to restore blood flow; disturbing the embolus by mechanical maceration of the embolus to release embolic particles from the outer layer of the embolus, thereby allowing the embolic particles to freely flow in the direction of the blood flow without capturing said embolic particles; wherein said restored blood flow causes lysis of the embolic particles; and extracting the inner core of the embolus.

Claims 2-32, 35-48, 55-63, 65-72, 74-76, 78-82, 84-91, 93-101, and 103-104 depend from base Claims 1, 33, 34, 54, 64, 73, 77, 83 and 92, and therefore have novelty for at least the same reasons as do base Claims 1, 33, 34, 54, 64, 73, 77, 83 and 92.

The following prior art is made of record to support and further define the reasons for allowance of base Claims 1, 33, 34, 54, 64, 73, 77, 83 and 92:

(i) Fulkerson discloses an expandable tip assembly adapted to address an occlusive thrombus (Title; Abstract) within a blood vessel without distal embolic protection (Fig. 1 shows no distal embolic protection, ie- screen or filter), comprising a hypotube (Para. [0047] The instant revascularization system delivery device may be made from materials knownto artisans, including stainless steel hypotube, stainless steel coil, polymerjackets, and/or radiopaque jackets; Para. [0050] distal segment 120 comprises inner catheter 122 and revascularization device 124 (as shown here in one embodiment having uniform cells, variable cells likewise being within)) having a proximal portion (Para. [0049] proximal segment 110 and distal segment 120), a distal portion (Para. [0049]) and a lumen (Para. [0047] delivery device 130 provides a conduit in fluid communication with the lumen of the catheter-based revascularization system 100 enabling users) sized and adapted to receive a guidewire (Para. [0003] catheter systems having guidewires to access and emplace improved neurological medical devices into the cerebral vasculature); an expandable and reconstrainable scaffold coupled to the distal end of the hypotube, the scaffold being adapted to radially self-expand from a non-expanded configuration to an expanded configuration upon unsheathing of the scaffold and to transition from the expanded configuration to the non-expanded configuration upon resheathing of the scaffold (Para. [0057] After the embolus is lysed, revascularization device 124 is sheathed into outer catheter 112 and removed from the body); wherein the scaffold comprises a generally cylindrical configuration (Fig. 2 at 120); wherein the scaffold comprises a laser-cut tube (Para. [0050] is made from stainless steel coil, stainless steel wire, or ribbon or laser cut hypotube and is of a suitable length and diameter to move through outer catheter 112 during deployment); wherein the scaffold comprises an open distal end without a distal embolic protection member or device (Fig. 2 shows open distal end without distal embolic protection member); wherein a proximal end of the scaffold comprises a cut-out section adapted to facilitate re-sheathing of the scaffold (Para. [0057] After the embolus is lysed, revascularization device 124 is sheathed into outer catheter 112 and removed from the body); wherein the scaffold comprises a plurality of open cells defined by struts and connected by bridges (Fig. 2 defined by the open spaces in 124); but the prior art of record, individually or in combination, does not teach or fairly suggest a variable-stiffness hypotube wherein the distal portion of the hypotube has a greater flexibility than the proximal portion; wherein the greater flexibility is provided by spiral laser cuts spaced along the distal portion of the hypotube; wherein each strut has two ends, with each end connected to one of the bridges; wherein the scaffold has a chronic outward force (COF) per unit length that does not decrease by more than 75% from an expansion diameter of 1.5 mm to an expansion diameter of 4.5 mm; and wherein the open cells are sized to promote at least one of vessel reperfusion or thrombus removal wherein the spacing between the spiral cuts decreases from a proximal end of the distal portion to a distal end of the distal portion.

(ii) Fulkerson discloses an expandable tip assembly configured to address an occlusive thrombus (Title; Abstract) within a blood vessel without distal embolic protection (Fig. 1 shows no distal embolic protection, ie- screen or filter), comprising an elongate member (Fig. 1 at 110); an expandable and reconstrainable scaffold coupled to the distal end of the hypotube (Fig. 2 at 120), the scaffold being adapted to radially self-expand from a non-expanded configuration to an expanded configuration (Para. [0007] a self-expanding radial filter/revascularization device and basket assembly detachably tethered to the catheter system which functions in at least three respective modes) and to transition from the expanded configuration to the non-expanded configuration upon unsheathing and re-sheathing of the scaffold (Para. [0057] After the embolus is lysed, revascularization device 124 is sheathed into outer catheter 112 and removed from the body); wherein the scaffold comprises a laser-cut tube (Para. [0050] is made from stainless steel coil, stainless steel wire, or ribbon or laser cut hypotube and is of a suitable length and diameter to move through outer catheter 112 during deployment); wherein the scaffold is coupled to the distal end of the elongate member by a plurality of tether lines (Fig. 2 where 122 has tether lines to 124); wherein the scaffold comprises an open distal end without a distal embolic protection member or device (Fig. 2 shows open distal end without distal embolic protection member); wherein the scaffold comprises a plurality of open cells defined by struts and connected by bridges (Fig. 2 defined by the open spaces in 124), but the prior art of record, individually or in combination, does not teach or fairly suggest wherein a proximal end of the scaffold comprises a scooped-out section configured to facilitate re-sheathing of the scaffold; wherein each strut has two ends, with each end connected to one of the bridges; and wherein the open cells are sized to promote at least one of vessel reperfusion or thrombus removal.

**Supplemental Box**

**In case the space in any of the preceding boxes is not sufficient.**
Continuation of:

(iii) Fulkerson discloses a system comprising a plurality of expandable tip assemblies configured to address an occlusive thrombus (Title; Abstract) within a blood vessel for providing progressive therapy without distal embolic protection (Fig. 1 shows no distal embolic protection, ie- screen or filter), the system comprising a first expandable tip assembly comprising a first elongate member (Fig. 1 at 110) and a first self-expanding scaffold (Fig. 2 at 120); wherein the first self-expanding scaffold is coupled to a distal end of the first elongate member (Fig. 2); wherein the first self-expanding scaffold comprises an open distal end without a distal embolic protection member or device (Fig. 2 shows open distal end without distal embolic protection member); wherein the first self-expanding scaffold comprises open cells formed by a pattern of struts and bridges (Fig. 2 defined by the open spaces in 124), but the prior art of record, individually or in combination, does not teach or fairly suggest wherein said cells have a cell size configured to hinder penetration of thrombus material within the first self-expanding scaffold, thereby increasing an amount of blood flow through the first self-expanding scaffold; and a second expandable tip assembly comprising a second elongate member and a second self-expanding scaffold; herein the second self-expanding scaffold is coupled to a distal end of the second elongate member; wherein the second self-expanding scaffold comprises an open distal end without a distal embolic protection member or device; wherein the second self-expanding scaffold comprises open cells formed by a pattern of struts and bridges, wherein said cells have a cell size larger than the cell size of the first self-expanding scaffold, wherein said cell size of the second self-expanding scaffold is configured to enhance penetration of thrombus material within the scaffold to facilitate capture of the thrombus; wherein, in use, the first self-expanding scaffold and the second self-expanding scaffold are adapted to radially self-expand from a non-expanded configuration to an expanded configuration and to transition from the expanded configuration to the nonexpanded configuration upon unsheathing and re-sheathing of the first and second self expanding scaffolds.

(iv) Brady discloses an expandable tip assembly configured to address an occlusive thrombus (Title; Abstract) within a blood vessel, but with distal embolic protection (Fig. 1 shows a retractable guidewire tip, but with a distal embolic protection, ie- screen or filter), comprising an elongate member (Fig. 1 at 101); the scaffold being adapted to radially self-expand from a non-expanded configuration to an expanded configuration (Para. [0066]) a self-expanding radial filter/revascularization device and basket assembly detachably tethered to the catheter system which functions in at least three respective modes and to transition from the expanded configuration to the non-expanded configuration upon unsheathing and re-sheathing of the scaffold (Para. [0066] The support frame 111 is such that it is naturally expanded as shown in the drawings and can be collapsed inwardly against the sleeve 104); wherein the scaffold comprises a laser-cut tube (Para. [0074] Typically the finishing operations involve processes such as mechanical machining operations, laser machining or chemical machining); wherein the scaffold is coupled to the distal end of the elongate member by a plurality of tether lines (Fig. 1 where 111 has tether lines to 125), but the prior art of record, individually or in combination, does not teach or fairly suggest the device wherein the scaffold comprises an open distal end without a distal embolic protection member or device; wherein the scaffold comprises a plurality of open cells defined by struts and connected by bridges, wherein a proximal end of the scaffold comprises a scooped-out section configured to facilitate re-sheathing of the scaffold; wherein each strut has two ends, with each end connected to one of the bridges; and wherein the open cells are sized to promote at least one of vessel reperfusion or thrombus removal or an expandable and reconstrainable scaffold coupled to the distal end of the hypotube.

Claims 1-48, 54-101, and 103-104 meet the criteria set out in PCT Article 33(4) and thus have industrial applicability because the subject matter claimed can be made or used in industry.

Claims as Filed in PCT/US2010/062532

**WHAT IS CLAIMED IS:**

1. An expandable tip assembly adapted to address an occlusive thrombus within a blood vessel without distal embolic protection, comprising:

a variable-stiffness hypotube having a proximal portion, a distal portion and a lumen sized and adapted to receive a guidewire;

wherein the distal portion of the hypotube has a greater flexibility than the proximal portion;

wherein the greater flexibility is provided by spiral laser cuts spaced along the distal portion of the hypotube;

wherein the spacing between the spiral cuts decreases from a proximal end of the distal portion to a distal end of the distal portion;

an expandable and reconstrainable scaffold coupled to the distal end of the hypotube, the scaffold being adapted to radially self-expand from a non-expanded configuration to an expanded configuration upon unsheathing of the scaffold and to transition from the expanded configuration to the non-expanded configuration upon re-sheathing of the scaffold;

wherein the scaffold comprises a generally cylindrical configuration;

wherein the scaffold comprises a laser-cut tube;

wherein the scaffold comprises an open distal end without a distal embolic protection member or device;

wherein a proximal end of the scaffold comprises a cut-out section adapted to facilitate re-sheathing of the scaffold;

wherein the scaffold comprises a plurality of open cells defined by struts and connected by bridges;

wherein each strut has two ends, with each end connected to one of the bridges;

wherein the scaffold has a chronic outward force (COF) per unit length that does not decrease by more than 75% from an expansion diameter of 1.5 mm to an expansion diameter of 4.5 mm; and

wherein the open cells are sized to promote at least one of vessel reperfusion or thrombus removal.

2. The expandable tip assembly of Claim 1, wherein each bridge is connected to four struts.

3. The expandable tip assembly of Claim 1, wherein the scaffold is coupled to the distal end of the hypotube by a plurality of tether lines that extend eccentrically from one half of the distal end of the hypotube.

4. The expandable tip assembly of Claim 1, wherein the scaffold has a chronic outward force (COF) per unit length that does not decrease by more than 50% from a diameter of 1.5 mm to a diameter of 4.5 mm.

5. The expandable tip assembly of Claim 1, wherein the cells of the scaffold have a uniform cell size.

6. The expandable tip assembly of Claim 1, wherein the cells of the scaffold have a variable cell size, and further wherein the cell size of the cells at the end portions of the scaffold are smaller than the cell size of the cells of the middle portion of the scaffold.

7. The expandable tip assembly of Claim 1, wherein the strut thickness is substantially equal to the strut width.

8. The expandable tip assembly of Claim 1, wherein a ratio of strut thickness to strut width is less than at least about 1.4.

9. The expandable tip assembly of Claim 1, wherein the expandable tip assembly comprises a reperfusion device and wherein the cells of the scaffold have a cell size adapted to inhibit protrusion of portions of the thrombus within an interior of the scaffold.

10. The expandable tip assembly of Claim 9, wherein the cells of the scaffold have a cell length of between 2 mm and 4 mm and a cell height between 1 mm and 3 mm in the expanded configuration.

11. The expandable tip assembly of Claim 9, wherein the scaffold has an average chronic outward force across a diameter of 1.5 mm to 4.5 mm of between 0.0040 N and 0.0120 N.

12. The expandable tip assembly of Claim 9, wherein the scaffold has a maximum expansion diameter of 5 mm.

13. The expandable tip assembly of Claim 9, wherein the scaffold has a length of about 30 mm.

14. The expandable tip assembly of Claim 9, wherein an exterior, contact surface of the struts comprises a squared-off or rounded configuration to increase the contact surface area of the scaffold, thereby enhancing compression of the thrombus.

15. The expandable tip assembly of Claim 9, wherein an exterior, contact surface of the struts comprises a pointed or tapered configuration.

16. The expandable tip assembly of Claim 1, wherein the expandable tip assembly comprises a thrombus removal device, and wherein the cells of the scaffold have a cell size adapted to promote protrusion of portions of the thrombus within an interior of the scaffold.

17. The expandable tip assembly of Claim 16, wherein the cells of the scaffold have a cell length of between 4 mm and 6 mm and a cell height between 2 mm and 4 mm in the expanded configuration.

18. The expandable tip assembly of Claim 16, wherein the scaffold has an average chronic outward force across a diameter of 1.5 mm to 4.5 mm of between 0.0020 N and 0.0090 N.

19. The expandable tip assembly of Claim 16, wherein an exterior, contact surface of the struts comprises a pointed or tapered configuration.

20. The expandable tip assembly of Claim 16, wherein the struts comprise one or more surface features adapted to enhance engagement of thrombus material.

21. The expandable tip assembly of Claim 20, wherein the struts comprise one or more grooves.

22. The expandable tip assembly of Claim 20, wherein the struts comprise one or more protrusions or projections.

23. The expandable tip assembly of Claim 16, wherein a central portion of each strut of the scaffold has a greater thickness than adjacent portions of the strut.

24. The expandable tip assembly of Claim 16, wherein the struts comprise multiple flex points along the length of the struts.

25. The expandable tip assembly of Claim 16, wherein the bridges form X-shaped connections between the cells of the scaffold.

26. The expandable tip assembly of Claim 16, wherein the bridges have a greater thickness than adjacent portions of the struts connected to the bridges.

27. The expandable tip assembly of Claim 16, wherein the scaffold has a maximum expansion diameter of 3 mm

28. The expandable tip assembly of Claim 16, wherein the scaffold has a maximum expansion diameter of 5 mm.

29. The expandable tip assembly of Claim 16, wherein the scaffold has a length of about 30 mm.

30. A method of using an expandable tip assembly as in any one of Claims 1 through 29 to address an occlusive thrombus within a blood vessel.

31. A method of using an expandable tip assembly as in any one of Claims 1 through 15 to reperfuse an occluded blood vessel having an occlusive thrombus.

32. A method of using an expandable tip assembly as in any one of Claims 1 through 8 or Claims 16 through 29 to extract thrombus material from an occluded blood vessel.

33. An expandable tip assembly configured to address an occlusive thrombus within a blood vessel without distal embolic protection, comprising:

an elongate member;

an expandable and reconstrainable scaffold coupled to the distal end of the hypotube, the scaffold being adapted to radially self-expand from a non-expanded configuration to an expanded configuration and to transition from the expanded configuration to the non-expanded configuration upon unsheathing and re-sheathing of the scaffold;

wherein the scaffold comprises a laser-cut tube;

wherein the scaffold is coupled to the distal end of the elongate member by a plurality of tether lines;

wherein the scaffold comprises an open distal end without a distal embolic protection member or device;

wherein a proximal end of the scaffold comprises a scooped-out section configured to facilitate re-sheathing of the scaffold;

wherein the scaffold comprises a plurality of open cells defined by struts and connected by bridges;

wherein each strut has two ends, with each end connected to one of the bridges; and

wherein the open cells are sized to promote at least one of vessel reperfusion or thrombus removal.

34. A system comprising a plurality of expandable tip assemblies configured to address an occlusive thrombus within a blood vessel for providing progressive therapy without distal embolic protection, the system comprising:

a first expandable tip assembly comprising a first elongate member and a first self-expanding scaffold;

wherein the first self-expanding scaffold is coupled to a distal end of the first elongate member;

wherein the first self-expanding scaffold comprises an open distal end without a distal embolic protection member or device;

wherein the first self-expanding scaffold comprises open cells formed by a pattern of struts and bridges, wherein said cells have a cell size configured to hinder penetration of thrombus material within the first self-expanding scaffold, thereby increasing an amount of blood flow through the first self-expanding scaffold; and

a second expandable tip assembly comprising a second elongate member and a second self-expanding scaffold;

wherein the second self-expanding scaffold is coupled to a distal end of the second elongate member;

wherein the second self-expanding scaffold comprises an open distal end without a distal embolic protection member or device;

wherein the second self-expanding scaffold comprises open cells formed by a pattern of struts and bridges, wherein said cells have a cell size larger than the cell size of the first self-expanding scaffold, wherein said cell size of the second self-expanding scaffold is configured to enhance penetration of thrombus material within the scaffold to facilitate capture of the thrombus;

wherein, in use, the first self-expanding scaffold and the second self-expanding scaffold are adapted to radially self-expand from a non-expanded configuration to an expanded configuration and to transition from the expanded configuration to the non-expanded configuration upon unsheathing and re-sheathing of the first and second self-expanding scaffolds.

35. The system of Claim 34, further comprising a microcatheter adapted to receive the first and second self-expanding scaffolds and further adapted to be movable with respect to the first and second self-expanding scaffolds to provide the unsheathing and re-sheathing of the first and second self-expanding scaffolds.

36. The system of Claim 34 or 35, wherein the first elongate member and the second elongate member comprise a variable-stiffness hypotube having a lumen.

37. The system of Claim 36, further comprising a guidewire configured to be received by the first elongate member and the second elongate member.

38. The system of Claim 36, wherein a distal section of the variable-stiffness hypotube comprises a laser spiral cut pattern that allows the distal section to bend to navigate through curved portions of the cerebral vasculature.

39. The system of Claim 38, wherein said laser spiral cut pattern spans a length of about 35 cm.

40. The system of Claim 34 or 35, wherein the first elongate member and the second elongate member comprise a wire without a lumen.

41. The system of Claim 34 or 35, wherein the first expandable tip assembly and the second expandable tip assembly have an average chronic outward force across a diameter of 1.5 mm to 4.5 mm that does not decrease by more than 50% to 75%.

42. The system of Claim 34 or 35, wherein the first self-expanding scaffold and the second self-expanding scaffold have a substantially non-zero chronic outward force across a diameter of 1.5 mm to 4.5 mm.

43. The system of Claim 34 or 35, wherein the cells of the first self-expanding scaffold have a cell length of between 2 mm and 4 mm and a cell height between 1 mm and 3 mm in an expanded configuration.

44. The system of Claim 34 or 35, wherein the first self-expanding scaffold has an average chronic outward force across a diameter of 1.5 mm to 4.5 mm of between 0.0040 N and 0.0120 N.

45. The system of Claim 34 or 35, wherein the cells of the second self-expanding scaffold have a cell length of between 4 mm and 6 mm and a cell height between 2 mm and 4 mm in an expanded configuration.

46. The system of Claim 34 or 35, wherein the second self-expanding scaffold has an average chronic outward force across a diameter of 1.5 mm to 4.5 mm of between 0.0020 N and 0.0090 N.

47. The system of Claim 34 or 35, wherein a central portion of each strut of the second self-expanding scaffold has a greater thickness than adjacent portions of the strut.

48. The system of Claim 34 or 35, wherein the first expandable tip assembly comprises a reperfusion device adapted to facilitate blood flow restoration and the second expandable tip assembly comprises a thrombus removal device adapted to be inserted after removal of the reperfusion device, wherein the thrombus removal device is further adapted to facilitate removal of any remaining thrombus material.

49. A kit comprising a plurality of expandable tip assemblies configured to address an occlusive thrombus within a blood vessel for providing progressive therapy without distal embolic protection, the kit comprising:

a first expandable tip assembly as in any one of Claims 1 through 15;

a second expandable tip assembly as in any one of Claims 1 through 8 or Claims 16 through 29.

50. The kit of Claim 49, further comprising a microcatheter adapted to deliver the first expandable tip assembly and the second expandable tip assembly within the blood vessel.

51. The kit of Claim 50, wherein the microcatheter comprises a neuro-microcatheter sized to be inserted within cerebral vasculature of a human patient.

52. The kit of any one of Claims 49-51, further comprising a guide catheter.

53. The kit of any one of Claims 49-51, further comprising a guidewire.

54. A method of using a plurality of expandable tip assemblies adapted to address an occlusive thrombus within a blood vessel for providing progressive therapy, the method comprising:

identifying a thrombus within a blood vessel;

inserting an expandable reperfusion device within the blood vessel to the location of the thrombus,

wherein the expandable reperfusion device comprises an expandable reperfusion scaffold having a plurality of interconnected struts that form cells having a cell size that

is sized and configured to reduce protrusion of the thrombus within the reperfusion scaffold, thereby increasing a diameter of a flow path established by the reperfusion scaffold;

deploying the reperfusion device within the thrombus, thereby compressing the thrombus against the inner vessel wall and establishing one or more blood flow channels through the thrombus,

wherein the one or more blood flow channels facilitate natural lysis of the thrombus;

removing the reperfusion device;

inserting an expandable thrombus removal device within the blood vessel to the location of the thrombus,

wherein the expandable thrombus removal device comprises an expandable removal scaffold having a plurality of interconnected struts that form cells having a cell size that is sized and configured to allow thrombus penetration within the cells, thereby facilitating engagement of the thrombus by the removal scaffold;

deploying the thrombus removal device within a remaining portion of the thrombus, thereby engaging the remaining portion of the thrombus;

extracting the remaining portion of the thrombus engaged by the thrombus removal device from the blood vessel; and

removing the thrombus removal device.

55. The method of Claim 54, wherein the expandable reperfusion device and the expandable thrombus removal device comprise self-expanding devices.

56. The method of Claim 55, wherein the expandable reperfusion device and the expandable thrombus removal device are inserted into the blood vessel within a microcatheter to the location of the thrombus.

57. The method of Claim 56, wherein deploying the reperfusion device comprises retracting the microcatheter, thereby allowing the reperfusion device to expand within the thrombus.

58. The method of Claim 56, wherein deploying the thrombus removal device comprises retracting the microcatheter, thereby allowing the thrombus removal device to expand within the thrombus.

59. The method of Claim 56, wherein removing the reperfusion device comprises resheathing the reperfusion device by advancing the microcatheter over the reperfusion device while keeping the reperfusion device stationary and then removing the microcatheter with the reperfusion device together.

60. The method of Claim 54, wherein an expansion diameter of the reperfusion device is configured to provide increased cell deformation of the reperfusion scaffold, thereby reducing protrusion of thrombus material within the reperfusion scaffold.

61. The method of Claim 54, wherein an expansion diameter of the thrombus removal device is configured to provide reduced cell deformation of the removal scaffold, thereby increasing thrombus penetration within the removal scaffold.

62. The method of Claim 57, further comprising resheathing the reperfusion device within the microcatheter by advancing the microcatheter and then unsheathing the reperfusion device by retracting the microcatheter to provide maceration of the thrombus.

63. The method of Claim 54, wherein the cells of the reperfusion scaffold in an expanded configuration have a cell length of between 2 mm and 4 mm and a cell height between 1 mm and 3 mm and wherein the cells of the removal scaffold in an expanded configuration have a cell length of between 4 mm and 6 mm and a cell height between 2 mm and 4 mm.

64. A method of using a plurality of expandable tip assemblies adapted to address an occlusive thrombus within a blood vessel for providing progressive therapy, the method comprising:

inserting an expandable reperfusion device within an occluded blood vessel having a thrombus;

positioning the expandable reperfusion device to span at least a portion of a length of the thrombus;

wherein the expandable reperfusion device comprises a self-expanding reperfusion scaffold having a plurality of interconnected struts that form cells sized and configured to inhibit protrusion of the thrombus into the reperfusion scaffold, thereby increasing a diameter of a flow path established by the reperfusion scaffold;

deploying the reperfusion device within the thrombus, thereby compressing the thrombus against the inner vessel wall and establishing blood flow through the occluded blood vessel,

wherein the established blood flow facilitates natural lysis of the thrombus;

macerating the thrombus;

wherein at least one of the natural lysis and the maceration fragment the thrombus until only a portion of the thrombus remains;

removing the reperfusion device;

inserting a thrombus removal device within the blood vessel to span at least a portion of a length of the remaining thrombus,

wherein the thrombus removal device comprises a self-expanding removal scaffold having a plurality of interconnected struts that form cells having a cell size that is sized and configured to allow thrombus protrusion within the cells, thereby facilitating engagement of the remaining thrombus by the removal scaffold;

deploying the thrombus removal device within the remaining thrombus to engage the remaining thrombus; and

removing the thrombus removal device, thereby extracting the remaining thrombus.

65. The method of Claim 64, wherein macerating the thrombus comprises sheathing and unsheathing of the reperfusion scaffold, wherein said sheathing and unsheathing causes the reperfusion scaffold to compress and expand.

66. The method of Claim 64 or Claim 65, wherein the reperfusion device and the thrombus removal device are inserted into the blood vessel within a microcatheter.

67. The method of Claim 66, wherein deploying the reperfusion device comprises retracting the microcatheter, thereby allowing the reperfusion device to expand within the thrombus.

68. The method of Claim 66, wherein deploying the thrombus removal device comprises retracting the microcatheter, thereby allowing the thrombus removal device to expand within the thrombus.

69. The method of Claim 67, wherein removing the reperfusion device comprises resheathing the reperfusion device by advancing the microcatheter over the reperfusion

device while keeping the reperfusion device stationary and then removing the microcatheter with the reperfusion device together.

70. The method of Claim 66, wherein an expansion diameter of the reperfusion device is configured to provide increased cell deformation of the reperfusion scaffold, thereby reducing thrombus penetration within an interior of the reperfusion scaffold.

71. The method of Claim 64, wherein an expansion diameter of the thrombus removal device is configured to provide reduced cell deformation of the removal scaffold, thereby increasing thrombus protrusion within the removal scaffold.

72. The method of Claim 64, wherein the cells of the expandable reperfusion device in an expanded configuration have a cell length of between 2 mm and 4 mm and a cell height between 1 mm and 3 mm and wherein the cells of the expandable thrombus removal device in an expanded configuration have a cell length of between 4 mm and 6 mm and a cell height between 2 mm and 4 mm.

73. A thrombus management method for addressing an occlusive thrombus within a blood vessel without distal embolic protection, the method comprising:

identifying a cerebral artery having an occlusive thrombus;

inserting a guide catheter into a patient;

inserting a guide wire through the guide catheter into the cerebral artery and through the thrombus;

inserting a microcatheter over the guidewire and through the thrombus;

positioning a distal end of the microcatheter within about a centimeter past the thrombus;

inserting an expandable tip assembly comprising a scaffold through the microcatheter;

retracting the microcatheter, thereby causing the scaffold to expand;

wherein said expansion compresses the thrombus against a wall of the cerebral artery;

wherein said compression of the thrombus restores blood flow within the cerebral artery;

wherein said restored blood flow facilitates natural lysis of the thrombus; and

macerating the thrombus by resheathing the scaffold and unsheathing the scaffold, thereby facilitating mechanical lysis and fragmentation of the thrombus to release embolic particles;

wherein the embolic particles flow in the direction of the blood flow and are not captured by any distal embolic protection member, but are instead lysed through the natural lysis process due to the restored blood flow.

74. The thrombus management method of Claim 73, further comprising engaging any remaining thrombus material and removing the remaining thrombus material with the expandable tip assembly.

75. The thrombus management method of Claim 73, further comprising removing the expandable tip assembly and inserting a second expandable tip assembly into the microcatheter, the second expandable tip assembly having a self-expanding scaffold with cells having a cell size configured to increase penetration of the remaining thrombus material into the cells to facilitate capture of the remaining thrombus material.

76. The thrombus management method of Claim 75, further comprising engaging any remaining thrombus material and removing the remaining thrombus material with the second expandable tip assembly.

77. A thrombus management method for addressing an occlusive thrombus within a blood vessel, the method comprising:

identifying an occluded blood vessel having an occlusive thrombus;

selecting an expandable tip assembly based, at least in part, on a diameter of the identified occluded blood vessel, the expandable tip assembly comprising a proximal elongate member and a distal self-expanding scaffold;

inserting the selected expandable tip assembly within the occluded vessel through a microcatheter such that the self-expanding scaffold is positioned at a location of the thrombus in a non-expanded configuration;

retracting the microcatheter, thereby causing the scaffold to expand to an expanded configuration;

wherein said expansion compresses the thrombus against a wall of the blood vessel;

wherein said compression of the thrombus restores blood flow within the blood vessel;

wherein said restored blood flow facilitates natural lysis of the thrombus; and

macerating the thrombus by resheathing the self-expanding scaffold and unsheathing the self-expanding scaffold within the microcatheter, thereby facilitating mechanical lysis and fragmentation of the thrombus.

78. The thrombus management method of Claim 77, further comprising engaging the remaining thrombus material and removing the remaining thrombus material with the expandable tip assembly.

79. The thrombus management method of Claim 77, further comprising removing the expandable tip assembly and inserting a second expandable tip assembly into the microcatheter, the second expandable tip assembly having a self-expanding scaffold with cells having a cell size configured to increase protrusion of the remaining thrombus material within the cells to facilitate capture of the remaining thrombus material.

80. The thrombus management method of Claim 79, further comprising removing the remaining thrombus material with the second expandable tip assembly.

81. The thrombus management method of any one of Claims 77 through 80, wherein the blood vessel comprises a cerebral artery, and wherein the proximal elongate member comprises a flexible, distal portion configured to navigate curved portions of cerebral vasculature during delivery to the cerebral artery.

82. The thrombus management method of Claim 77, wherein blood flow is restored in less than two minutes from deployment of the self-expanding scaffold within the thrombus.

83. A thrombus management method for addressing an occlusive thrombus within a blood vessel by providing multiple layer embolus removal, comprising:

identifying an embolus within a cerebral artery;

inserting an expandable reperfusion device within the cerebral artery to the location of the embolus;

expanding the reperfusion device within the embolus, thereby establishing one or more blood flow channels through the embolus,

wherein the one or more blood flow channels facilitate natural lysis of the embolus to remove one or more outer layers of the embolus;

removing the reperfusion device;

inserting an expandable embolus removal device within the cerebral artery to the location of the embolus;

expanding the embolus removal device within a remaining portion of the embolus, thereby engaging the remaining portion of the embolus;

extracting the remaining portion of the embolus with the embolus removal device from the cerebral artery; and

removing the embolus removal device.

84. The method of Claim 83, wherein the reperfusion device comprises an expandable tip assembly including a proximal elongate member and a distal self-expanding scaffold.

85. The method of Claim 84, wherein said scaffold comprises open cells having a cell size that is configured to decrease penetration of the embolus within the scaffold, thereby increasing blood flow through the scaffold.

86. The method of Claim 83, wherein the embolus removal device comprises an expandable tip assembly including a proximal elongate member and a distal self-expanding scaffold.

87. The method of Claim 86, wherein said scaffold comprises open cells having a cell size that is configured to increase protrusion of the remaining portion of the embolus within the scaffold to facilitate capture of the remaining portion of the embolus.

88. The method of Claim 84, wherein inserting an expandable reperfusion device within the cerebral artery to the location of the embolus comprises inserting the expandable reperfusion device through a microcatheter such that the self-expanding scaffold is in a non-expanded configuration.

89. The method of Claim 84, wherein expanding the reperfusion device within the embolus comprises retracting the microcatheter, thereby allowing the self-expanding scaffold to deploy to an expanded configuration.

90. The method of Claim 83, wherein the one or more outer layers of the embolus comprise platelets and red blood cells.

91. The method of Claim 83, wherein the remaining portion of the embolus comprises a firm fibrin core of the embolus.

92. A thrombus management method for addressing an occlusive thrombus within a blood vessel by providing multiple layer embolus removal from a cerebral artery, comprising:

identifying an embolus within a cerebral artery;

wherein the embolus comprises an outer layer and an inner core;

establishing one or more blood flow channels through the embolus to restore blood flow;

disturbing the embolus by mechanical maceration of the embolus to release embolic particles from the outer layer of the embolus, thereby allowing the embolic particles to freely flow in the direction of the blood flow without capturing said embolic particles;

wherein said restored blood flow causes lysis of the embolic particles; and

extracting the inner core of the embolus.

93. The method of Claim 92, wherein said restored blood flow causes further release of embolic particles from the outer layer of the embolus.

94. The method of Claim 92, wherein the outer layer of the embolus comprises a softer portion of the embolus than the inner core of the embolus.

95. The method of Claim 92, wherein the outer layer comprises platelets and red blood cells.

96. The method of Claim 92, wherein the inner core of the embolus comprises a fibrin core that has a hardness that exceeds the hardness of the outer layer of the embolus.

97. The method of any one of Claims 92 through 96, wherein establishing one or more blood flow channels through the embolus to facilitate natural lysis of the embolus comprises expanding an expandable reperfusion device within the embolus.

98. The method of Claim 97, further comprising macerating the embolus with the expandable reperfusion device.

99. The method of any one of Claims 92 through 96, wherein extracting a remaining portion of the embolus comprises expanding an expandable embolus removal device within the embolus to engage and capture the inner core of the embolus.

100. The expandable tip assembly of any one of Claims 1 through 8 or Claim 33, wherein the expandable tip assembly comprises a reperfusion device and wherein the cells of the scaffold have a cell size adapted to inhibit protrusion of portions of the thrombus within an interior of the scaffold.

101. The expandable tip assembly of any one of Claims 1 through 8 or Claim 33, wherein the expandable tip assembly comprises a thrombus removal device, and wherein the cells of the scaffold have a cell size adapted to promote protrusion of portions of the thrombus within an interior of the scaffold.

102. A method of using an expandable tip assembly as in Claim 100 or Claim 101 to address an occlusive thrombus within a blood vessel.

103. A method of using an expandable tip assembly as in Claim 100 to reperfuse an occluded blood vessel having an occlusive thrombus.

104. A method of using an expandable tip assembly as in Claim 101 to extract thrombus material from an occluded blood vessel.

UNITED STATES PATENT AND TRADEMARK OFFICE

UNITED STATES DEPARTMENT OF COMMERCE
United States Patent and Trademark Office
Address: COMMISSIONER FOR PATENTS
P.O. Box 1450
Alexandria, Virginia 22313-1450
www.uspto.gov

| APPLICATION NO. | FILING DATE | FIRST NAMED INVENTOR | ATTORNEY DOCKET NO. | CONFIRMATION NO. |
|---|---|---|---|---|
| 12/981,336 | 12/29/2010 | David Ferrera | MDFR.001P1P1C3 | 6372 |

20995 7590 05/05/2011
KNOBBE MARTENS OLSON & BEAR LLP
2040 MAIN STREET
FOURTEENTH FLOOR
IRVINE, CA 92614

| EXAMINER |
|---|

| ART UNIT | PAPER NUMBER |
|---|---|
| 3731 | |

| NOTIFICATION DATE | DELIVERY MODE |
|---|---|
| 05/05/2011 | ELECTRONIC |

**Please find below and/or attached an Office communication concerning this application or proceeding.**

The time period for reply, if any, is set in the attached communication.

Notice of the Office communication was sent electronically on above-indicated "Notification Date" to the following e-mail address(es):

jcartee@kmob.com
efiling@kmob.com
eOAPilot@kmob.com

UNITED STATES PATENT AND TRADEMARK OFFICE

Commissioner for Patents
United States Patent and Trademark Office
P.O. Box 1450
Alexandria, VA 22313-1450
www.uspto.gov

KNOBBE MARTENS OLSON & BEAR LLP
2040 MAIN STREET
FOURTEENTH FLOOR
IRVINE CA 92614

| | | |
|---|---|---|
| In re Application of | : | |
| FERRERA, DAVID et al | : | DECISION ON REQUEST TO |
| Application No. 12/981,336 | : | PARTICIPATE IN PATENT |
| Filed: Dec. 29, 2010 | : | PCT/PROSECUTION HIGHWAY |
| Attorney Docket No. MDFR.001P1P1C3 | : | PROGRAM AND PETITION |
| For: METHOD FOR PROVIDING PROGRESSIVE | : | TO MAKE SPECIAL UNDER |
| THERAPY FOR THROMBUS MANAGEMENT | : | 37 CFR 1.102(a) |

This is a decision on the renewed request to participate in the Patent Prosecution Highway (PPH) program and the petition under 37 CFR 1.102(a), filed May 3, 2011 to make the above-identified application special.

The request and petition are granted.

A grantable request to participate in the PPH program and petition to make special require:
(1) The U.S. application must disclose an eligible relationship to one or more PCT applications filed in the JPO, EPO, KIPO or USPTO;
(2) Applicant must submit a copy of the allowable/patentable claim(s) from the PCT application(s) latest international work product (the written opinion or the IPER) along with an English translation thereof and a statement that the English translation is accurate;
(3) All the claims in the U.S. application must sufficiently correspond or be amended to sufficiently correspond to the allowable/patentable claim(s) in the PCT application(s);
(4) Examination of the U.S. application has not begun;
(5) Applicant must submit a copy of the latest international work product from the PCT application containing the allowable/patentable claim(s) along with an English translation thereof and a statement that the English translation is accurate; and
(6) Applicant must submit an IDS listing the documents cited by the PCT examiner in the international work product along with copies of documents except U.S. patents or U.S. patent application publications.

In light of the petition being properly submitted, the request to participate in the PPH program and the petition comply with the above requirements. Accordingly, the above-identified application has been accorded "special" status.

The applicant is encouraged to cite and submit all relevant prior art references, if any, to facilitate examination in this application.

Other inquiries concerning the examination or status of the application should be directed to Anhtuan Nguyen, the SPE of Art Unit 3731 at 571-272-4963 for Class 606/127 and also accessible in the PAIR system at http://www.uspto.gov/ebc.index.html.

All other inquiries concerning the examination or status of the application should be directed to the Patent Application Information Retrieval (PAIR) system.

This application will be forwarded and docketed to an examiner for action on the merits commensurate with this decision.

Telephone inquiries concerning this decision should be directed to Henry C. Yuen, at 571-272-4856.

The petition is **granted.**

/Henry C. Yuen/

Henry C. Yuen, Special Programs Examiner
Technology Center 3700 – Mechanical Engineering,
Manufacturing and Products
571-272-4856

UNITED STATES PATENT AND TRADEMARK OFFICE

Commissioner for Patents
United States Patent and Trademark Office
P.O. Box 1450
Alexandria, VA 22313-1450
www.uspto.gov

MAILED

APR 21 2011

OFFICE OF PETITIONS

**KNOBBE MARTENS OLSON & BEAR LLP**
**2040 MAIN STREET**
**FOURTEENTH FLOOR**
**IRVINE CA 92614**

| | | |
|---|---|---|
| In re Application of | : | |
| Unknown | : | |
| Application No. 12/981,337 | : | ON PETITION |
| Deposited: December 29, 2010 | : | |
| Attorney Docket No. SMNPH.002C1C1 | : | |

This is in response to the petition 37 CFR 1.57(a)(3), filed January 7, 2011, requesting that the inadvertently omitted drawings be accepted. This petition is being treated pursuant to 37 CFR 1.53(e)(2)[1].

The petition under 37 CFR 1.57(a)(3) is **GRANTED to the extent indicated below**.

Application papers in the above-identified application were deposited on December 29, 2010. The filing of the application did not include drawing figures although the transmittal sheet indicates 22 sheets of drawings were filed and the specification references drawing figures 1-27. Applicants request that the application be amended to include the inadvertently omitted drawings on the basis that the application as filed contained a prior benefit claim under 37 CFR 1.55 or 1.78.

Petitioner's arguments and evidence have been considered. However, a review of the application confirms that, as filed, the application contained at least one method claim. MPEP 601.01(f) provides that:

> It has been USPTO practice to treat an application that contains at least one process or method claim as an application for which a drawing is not necessary for an understanding of the invention under 35 U.S.C. 113 (first sentence). The same practice has been followed in composition applications.

[1] Any request for review of a notification pursuant to paragraph (e)(1) of this section, or a notification that the original application papers lack a portion of the specification or drawing(s), must be by way of a petition pursuant to this paragraph accompanied by the fee set forth in § 1.17(f). In the absence of a timely (§ 1.181(f)) petition pursuant to this paragraph, the filing date of an application in which the applicant was notified of a filing error pursuant to paragraph (e)(1) of this section will be the date the filing error is corrected.

Thus, pursuant to § 601.01(f), a drawing is not considered essential for a filing date. The instant application is entitled to a filing date without drawings present in the application.

As stated in MPEP 601.01(g) under the section entitled, "Application Entitled to a Filing Date," applicant may submit an amendment to include the inadvertently omitted portion of the drawing(s) pursuant to 37 CFR 1.57(a):

> [i]f an application was filed on or after September 21, 2004, and contains a claim under 37 CFR 1.55 for priority of a prior-filed foreign application, or a claim under 37 CFR 1.78 for the benefit of a prior-filed provisional, nonprovisional, or international application that was present on the filing date of the application, and the omitted portion of the drawing(s) was inadvertently omitted from the application and is completely contained in the prior-filed application[.]

Please note that no petition is required and that the amendment must comply with 37 CFR 1.57(a) and 37 CFR 1.121. See MPEP § 201.17. Any amendment to include the inadvertently omitted drawing(s) will be considered by the examiner.

To the extent indicated, the request to amend the specification by the addition of 22 sheets of drawings is granted.

Given the basis for granting this petition, the petition fee under 37 CFR 1.17(f) is being refunded.

Pursuant to this decision, the application will be referred to Office of Patent Application Processing for:

- **establishment of the filing date as December 29, 2010**;
- **for indication in Office records, as appropriate, that "0" sheets of drawings were present on filing** and
- **for issuance of a filing receipt.**

Entry of the amendment filed October 6, 2009 will be determined by the examiner.

Telephone inquiries concerning this matter may be directed to Carl Friedman at (571) 272-6842.

Anthony Knight
Director,
Office of Petitions

PTO/SB/20PCT-US (09-10)
Approved for use through 01/31/2012. OMB 0651-0058
U.S. Patent and Trademark Office; U. S. DEPARTMENT OF COMMERCE
Under the Paperwork Reduction Act of 1995, no persons are required to respond to a collection of information unless it displays a valid OMB control number.

# REQUEST FOR PARTICIPATION IN THE PATENT COOPERATION TREATY - PATENT PROSECUTION HIGHWAY (PCT-PPH) PILOT PROGRAM IN A U.S. APPLICATION WHERE THE USPTO WAS THE ISA OR IPEA

| | | | |
|---|---|---|---|
| Application No: | 12/981,363 | Filing date: | December 29, 2010 |
| First Named Inventor: | David A. Ferrera | | |
| Title of the Invention: | MULTIPLE LAYER EMBOLUS REMOVAL | | |

**THIS REQUEST FOR PARTICIPATION IN THE PCT-PPH PILOT PROGRAM ALONG WITH THE REQUIRED DOCUMENTS MUST BE SUBMITTED VIA EFS-WEB. INFORMATION REGARDING EFS-WEB IS AVAILABLE AT HTTP://WWW.USPTO.GOV/EBC/EFS_HELP.HTML**

**APPLICANT HEREBY REQUESTS PARTICIPATION IN THE PCT-PPH PROGRAM AND PETITIONS TO MAKE THE ABOVE-IDENTIFIED APPLICATION SPECIAL UNDER THE PCT-PPH PROGRAM.**

The above-identified application is (1) a national stage entry of the corresponding PCT application, or (2) a national stage entry of another PCT application which claims priority to the corresponding PCT application, or (3) a national application that claims domestic/ foreign priority to the corresponding PCT application, or (4) a national application which forms the basis for the priority claim in the corresponding PCT application, or (5) a continuing application of a U.S. application that satisfies one of (1) to (4) above, or (6) a U.S. application that claims domestic benefit to a U.S. provisional application which forms the basis for the priority claim in the corresponding PCT application.

**The corresponding PCT application number(s) is/are:** PCT/US2010/062532

**The international date of the corresponding PCT application(s) is/are:**

December 30, 2010

**I. List of Required Documents:**

a. **A copy of the latest international work product (WO/ISA, WO/IPEA, or IPER) in the above–identified corresponding PCT application(s)**

- [x] Is attached
- [ ] Is not attached because the document is already in the U.S. application.

b. **A copy of all claims which were indicated as having novelty, inventive step and industrial applicability in the above-identified corresponding PCT application(s).**

- [x] Is attached.
- [ ] Is not attached because the document is already in the U.S. application.

c. **English translations of the documents in a. and b. above are attached (if the documents are not in the English language). A statement that the English translation is accurate is attached for the document in b. above.**



This collection of information is required by 35 U.S.C. 119, 37 CFR 1.55, and 37 CFR 1.102(d). The information is required to obtain or retain a benefit by the public, which is to file (and by the USPTO to process) an application. Confidentiality is governed by 35 U.S.C. 122 and 37 CFR 1.11 and 1.14. This collection is estimated to take 2 hours to complete, including gathering, preparing, and submitting the completed application form to the USPTO. Time will vary depending upon the individual case. Any comments on the amount of time you require to complete this form and/or suggestions for reducing this burden should be sent to the Chief Information Officer, U.S. Patent and Trademark Office, U.S. Department of Commerce, P.O. Box 1450, Alexandria, VA 22313-1450. DO NOT SEND FEES OR COMPLETED FORMS TO THIS ADDRESS.

Under the Paperwork Reduction Act of 1995, no persons are required to respond to a collection of information unless it displays a valid OMB control number.

# REQUEST FOR PARTICIPATION IN THE PCT-PPH PILOT PROGRAM IN A U.S. APPLICATION WHERE THE USPTO WAS THE ISA OR IPEA

(continued)

| | |
|---|---|
| Application No.: | 12/981,363 |
| First Named Inventor: | David A. Ferrera |

d. **(1) An information disclosure statement listing the documents cited in the international work products (ISR, WO/ISA, WO/IPEA, IPER) of the corresponding PCT application.**

☐ Is attached

☒ Has already been filed in the above-identified U.S. application on Feb. 22, 2011 and Apr. 19, 2011

**(2) Copies of all documents (except) for U.S. patents or U.S. patent application publications)**

☐ Are attached.

☒ Have already been filed in the above-identified U.S. application on Apr. 19, 2011

**II. Claims Correspondence Table:**

| Claims in US Application | Patentable Claims in the corresponding PCT Application | Explanation regarding the correspondence |
|---|---|---|
| 1-14, 16 | 83-96, 98 | Identical |
| 15 | 97 | Substantially identical (multiple dependency changed to single dependency) |
| 17 | 99 | Substantially identical (multiple dependency changed to single dependency) |
| 21 | 97 | Depends from Claim 97 (e.g., narrower in scope) |
| 22-24, 29 | 92 | Depend from Claim 92 (e.g., narrower in scope) |
| 25 | 84 | Depends from Claim 84 (e.g., narrower in scope) |
| 26, 27 | 83 | Depend from Claim 83 (e.g., narrower in scope) |
| 28 | 84 | Depends indirectly from Claim 84 (e.g., narrower in scope) |
| 30 | 84 | Depends from Claim 84 (e.g., narrower in scope) |
| 31 | 86 | Depends from Claim 86 (e.g., narrower in scope) |
| 32 | 97 | Depends indirectly from Claim 97 (e.g., narrower in scope) |
| 33 | 83 | Depends indirectly from Claim 83 (e.g., narrower in scope) |
| | | |
| | | |
| | | |
| | | |
| | | |
| | | |
| | | |

**III. All the claims in the US application sufficiently correspond to the patentable claims in the corresponding PCT application.**

| | |
|---|---|
| Signature /Michael R. Christensen/ | Date April 29, 2011 |
| Name (Print/Typed) Michael R. Christensen | Registration Number 57505 |

# Privacy Act Statement

The **Privacy Act of 1974 (P.L. 93-579)** requires that you be given certain information in connection with your submission of the attached form related to a patent application or patent. Accordingly, pursuant to the requirements of the Act, please be advised that: (1) the general authority for the collection of this information is 35 U.S.C. 2(b)(2); (2) furnishing of the information solicited is voluntary; and (3) the principal purpose for which the information is used by the U.S. Patent and Trademark Office is to process and/or examine your submission related to a patent application or patent. If you do not furnish the requested information, the U.S. Patent and Trademark Office may not be able to process and/or examine your submission, which may result in termination of proceedings or abandonment of the application or expiration of the patent.

The information provided by you in this form will be subject to the following routine uses:

1. The information on this form will be treated confidentially to the extent allowed under the Freedom of Information Act (5 U.S.C. 552) and the Privacy Act (5 U.S.C 552a). Records from this system of records may be disclosed to the Department of Justice to determine whether disclosure of these records is required by the Freedom of Information Act.
2. A record from this system of records may be disclosed, as a routine use, in the course of presenting evidence to a court, magistrate, or administrative tribunal, including disclosures to opposing counsel in the course of settlement negotiations.
3. A record in this system of records may be disclosed, as a routine use, to a Member of Congress submitting a request involving an individual, to whom the record pertains, when the individual has requested assistance from the Member with respect to the subject matter of the record.
4. A record in this system of records may be disclosed, as a routine use, to a contractor of the Agency having need for the information in order to perform a contract. Recipients of information shall be required to comply with the requirements of the Privacy Act of 1974, as amended, pursuant to 5 U.S.C. 552a(m).
5. A record related to an International Application filed under the Patent Cooperation Treaty in this system of records may be disclosed, as a routine use, to the International Bureau of the World Intellectual Property Organization, pursuant to the Patent Cooperation Treaty.
6. A record in this system of records may be disclosed, as a routine use, to another federal agency for purposes of National Security review (35 U.S.C. 181) and for review pursuant to the Atomic Energy Act (42 U.S.C. 218(c)).
7. A record from this system of records may be disclosed, as a routine use, to the Administrator, General Services, or his/her designee, during an inspection of records conducted by GSA as part of that agency's responsibility to recommend improvements in records management practices and programs, under authority of 44 U.S.C. 2904 and 2906. Such disclosure shall be made in accordance with the GSA regulations governing inspection of records for this purpose, and any other relevant ( *i.e.*, GSA or Commerce) directive. Such disclosure shall not be used to make determinations about individuals.
8. A record from this system of records may be disclosed, as a routine use, to the public after either publication of the application pursuant to 35 U.S.C. 122(b) or issuance of a patent pursuant to 35 U.S.C. 151. Further, a record may be disclosed, subject to the limitations of 37 CFR 1.14, as a routine use, to the public if the record was filed in an application which became abandoned or in which the proceedings were terminated and which application is referenced by either a published application, an application open to public inspection or an issued patent.
9. A record from this system of records may be disclosed, as a routine use, to a Federal, State, or local law enforcement agency, if the USPTO becomes aware of a violation or potential violation of law or regulation.

# PATENT COOPERATION TREATY

From the
INTERNATIONAL SEARCHING AUTHORITY

To: MICHAEL CHRISTENSEN
KNOBBE, MARTENS, OLSON & BEAR, LLP
2040 MAIN STREET, 14TH FLOOR
IRVINE, CA 92614

# PCT

WRITTEN OPINION OF THE
INTERNATIONAL SEARCHING AUTHORITY

(PCT Rule 43*bis*.1)

| | |
|---|---|
| Date of mailing *(day/month/year)* | 09 MAR 2011 |
| Applicant's or agent's file reference<br>MDFR-1P1P1WO | **FOR FURTHER ACTION**<br>See paragraph 2 below |

| International application No. | International filing date *(day/month/year)* | Priority date *(day/month/year)* |
|---|---|---|
| PCT/US2010/062532 | 30 December 2010 | 31 December 2009 |

International Patent Classification (IPC) or both national classification and IPC
IPC(8) - A61B 17/22 (2011.01)
USPC - 606/159

Applicant MINDFRAME, INC.

1. This opinion contains indications relating to the following items:

- [x] Box No. I Basis of the opinion
- [ ] Box No. II Priority
- [x] Box No. III Non-establishment of opinion with regard to novelty, inventive step and industrial applicability
- [ ] Box No. IV Lack of unity of invention
- [x] Box No. V Reasoned statement under Rule 43*bis*.1(a)(i) with regard to novelty, inventive step or industrial applicability; citations and explanations supporting such statement
- [ ] Box No. VI Certain documents cited
- [ ] Box No. VII Certain defects in the international application
- [ ] Box No. VIII Certain observations on the international application

2. **FURTHER ACTION**

If a demand for international preliminary examination is made, this opinion will be considered to be a written opinion of the International Preliminary Examining Authority ("IPEA") except that this does not apply where the applicant chooses an Authority other than this one to be the IPEA and the chosen IPEA has notified the International Bureau under Rule 66.1*bis*(b) that written opinions of this International Searching Authority will not be so considered.

If this opinion is, as provided above, considered to be a written opinion of the IPEA, the applicant is invited to submit to the IPEA a written reply together, where appropriate, with amendments, before the expiration of 3 months from the date of mailing of Form PCT/ISA/220 or before the expiration of 22 months from the priority date, whichever expires later.

For further options, see Form PCT/ISA/220.

3. For further details, see notes to Form PCT/ISA/220.

| Name and mailing address of the ISA/US | Date of completion of this opinion | Authorized officer: |
|---|---|---|
| Mail Stop PCT, Attn: ISA/US<br>Commissioner for Patents<br>P.O. Box 1450, Alexandria, Virginia 22313-1450<br>Facsimile No. 571-273-3201 | 15 February 2011 | Blaine R. Copenheaver<br>PCT Helpdesk: 571-272-4300<br>PCT OSP: 571-272-7774 |

**WRITTEN OPINION OF THE INTERNATIONAL SEARCHING AUTHORITY**

International application No.
PCT/US2010/062532

**Box No. I Basis of this opinion**

1. With regard to the **language**, this opinion has been established on the basis of:

   ☒ the international application in the language in which it was filed.

   ☐ a translation of the international application into _____ which is the language of a translation furnished for the purposes of international search (Rules 12.3(a) and 23.1(b)).

2. ☐ This opinion has been established taking into account the **rectification of an obvious mistake** authorized by or notified to this Authority under Rule 91 (Rule 43*bis*.1(a))

3. With regard to any **nucleotide and/or amino acid sequence** disclosed in the international application, this opinion has been established on the basis of a sequence listing filed or furnished:

   a. (means)

   ☐ on paper

   ☐ in electronic form

   b. (time)

   ☐ in the international application as filed

   ☐ together with the international application in electronic form

   ☐ subsequently to this Authority for the purposes of search

4. ☐ In addition, in the case that more than one version or copy of a sequence listing has been filed or furnished, the required statements that the information in the subsequent or additional copies is identical to that in the application as filed or does not go beyond the application as filed, as appropriate, were furnished.

5. Additional comments:

**WRITTEN OPINION OF THE INTERNATIONAL SEARCHING AUTHORITY**

International application No.
PCT/US2010/062532

**Box No. III Non-establishment of opinion with regard to novelty, inventive step and industrial applicability**

The questions whether the claimed invention appears to be novel, to involve an inventive step (to be non obvious), or to be industrially applicable have not been examined in respect of:

☐ the entire international application.

☒ claims Nos. 49-53, 102

because:

☐ the said international application, or the said claims Nos. _____ relate to the following subject matter which does not require an international search *(specify)*:

☒ the description, claims or drawings *(indicate particular elements below)* or said claims Nos. 49-53, 102 are so unclear that no meaningful opinion could be formed *(specify)*:

Claims 49-53, and 102 are multiple dependent claims not drafted in accordance with the second and third sentences of Rule 6.4(a).

☐ the claims, or said claims Nos. _____ are so inadequately supported by the description that no meaningful opinion could be formed *(specify)*:

☒ no international search report has been established for said claims Nos. 49-53, 102

☐ a meaningful opinion could not be formed without the sequence listing; the applicant did not, within the prescribed time limit:

☐ furnish a sequence listing on paper complying with the standard provided for in Annex C of the Administrative Instructions, and such listing was not available to the International Searching Authority in a form and manner acceptable to it.

☐ furnish a sequence listing in electronic form complying with the standard provided for in Annex C of the Administrative Instructions, and such listing was not available to the International Searching Authority in a form and manner acceptable to it.

☐ pay the required late furnishing fee for the furnishing of a sequence listing in response to an invitation under Rule 13*ter*.1(a) or (b).

☐ See Supplemental Box for further details.

**WRITTEN OPINION OF THE INTERNATIONAL SEARCHING AUTHORITY**

International application No.
PCT/US2010/062532

**Box No. V** **Reasoned statement under Rule 43*bis*.1(a)(i) with regard to novelty, inventive step or industrial applicability; citations and explanations supporting such statement**

1. Statement

| | | | |
|---|---|---|---|
| Novelty (N) | Claims | 1-48, 54-101, 103-104 | YES |
| | Claims | None | NO |
| Inventive step (IS) | Claims | 1-48, 54-101, 103-104 | YES |
| | Claims | None | NO |
| Industrial applicability (IA) | Claims | 1-48, 54-101, 103-104 | YES |
| | Claims | None | NO |

2. Citations and explanations:

Claims 1, 33, 34, 54, 64, 73,,77, 83 and 92 meet the criteria set out in PCT Article 33(2)-(3) because the prior art does not teach or fairly suggest certain subject matter in the claims, as follows:

Regarding claim 1, the prior art of record, individually or in combination, does not teach or fairly suggest an expandable tip assembly adapted to address an occlusive thrombus within a blood vessel without distal embolic protection, comprising a variable-stiffness hypotube, a distal portion and a lumen sized and adapted to receive a guidewire; an expandable and reconstrainable scaffold coupled to the distal end of the hypotube, the scaffold being adapted to radially self-expand from a non-expanded configuration to an expanded configuration upon unsheathing of the scaffold and to transition from the expanded configuration to the non-expanded configuration upon resheathing of the scaffold; wherein the scaffold comprises a generally cylindrical configuration; wherein the scaffold comprises a laser-cut tube; wherein the scaffold comprises an open distal end without a distal embolic protection member or device; wherein a proximal end of the scaffold comprises a cut-out section adapted to facilitate re-sheathing of the scaffold; wherein the scaffold comprises a plurality of open cells defined by struts and connected by bridges; a variable-stiffness hypotube wherein the distal portion of the hypotube has a greater flexibility than the proximal portion; wherein the greater flexibility is provided by spiral laser cuts spaced along the distal portion of the hypotube; wherein each strut has two ends, with each end connected to one of the bridges; wherein the scaffold has a chronic outward force (COF) per unit length that does not decrease by more than 75% from an expansion diameter of 1.5 mm to an expansion diameter of 4.5 mm; and wherein the open cells are sized to promote at least one of vessel reperfusion or thrombus removal wherein the spacing between the spiral cuts decreases from a proximal end of the distal portion to a distal end of the distal portion.

Regarding claim 33, the prior art of record, individually or in combination, does not teach or fairly suggest an expandable tip assembly configured to address an occlusive thrombus within a blood vessel without distal embolic protection, comprising an elongate member; an expandable and reconstrainable scaffold coupled to the distal end of the hypotube, the scaffold being adapted to radially self-expand from a non-expanded configuration to an expanded configuration and to transition from the expanded configuration to the non-expanded configuration upon unsheathing and re-sheathing of the scaffold; wherein the scaffold comprises a laser-cut tube; wherein the scaffold is coupled to the distal end of the elongate member by a plurality of tether lines; wherein the scaffold comprises an open distal end without a distal embolic protection member or device; wherein the scaffold comprises a plurality of open cells defined by struts and connected by bridges, a proximal end of the scaffold comprises a scooped-out section configured to facilitate re-sheathing of the scaffold; wherein each strut has two ends, with each end connected to one of the bridges; and wherein the open cells are sized to promote at least one of vessel reperfusion or thrombus removal.

Regarding claim 34, the prior art of record, individually or in combination, does not teach or fairly suggest a system comprising a plurality of expandable tip assemblies configured to address an occlusive thrombus within a blood vessel for providing progressive therapy without distal embolic protection, the system comprising a first expandable tip assembly comprising a first elongate member and a first self-expanding scaffold; wherein the first self-expanding scaffold is coupled to a distal end of the first elongate member; wherein the first self-expanding scaffold comprises an open distal end without a distal embolic protection member or device; wherein the first self-expanding scaffold comprises open cells formed by a pattern of struts and bridges, wherein said cells have a cell size configured to hinder penetration of thrombus material within the first self-expanding scaffold, thereby increasing an amount of blood flow through the first self-expanding scaffold; and a second expandable tip assembly comprising a second elongate member and a second self-expanding scaffold; herein the second self-expanding scaffold is coupled to a distal end of the second elongate member; wherein the second self-expanding scaffold comprises an open distal end without a distal embolic protection member or device; wherein the second self-expanding scaffold comprises open cells formed by a pattern of struts and bridges, wherein said cells have a cell size larger than the cell size of the first self-expanding scaffold, wherein said cell size of the second self-expanding scaffold is configured to enhance penetration of thrombus material within the scaffold to facilitate capture of the thrombus; wherein, in use, the first self-expanding scaffold and the second self-expanding scaffold are adapted to radially self-expand from a non-expanded configuration to an expanded configuration and to transition from the expanded configuration to the nonexpanded configuration upon unsheathing and re-sheathing of the first and second selfexpanding scaffolds.

**Supplemental Box**

**In case the space in any of the preceding boxes is not sufficient.**
Continuation of:

Regarding claim 54, the prior art of record, individually or in combination, does not teach or fairly suggest a method of using a plurality of expandable tip assemblies adapted to address an occlusive thrombus within a blood vessel for providing progressive therapy, the method comprising identifying a thrombus within a blood vessel; inserting an expandable reperfusion device within the blood vessel to the location of the thrombus, wherein the expandable reperfusion device comprises an expandable reperfusion scaffold having a plurality of interconnected struts that form cells having a cell size that is sized and configured to reduce protrusion of the thrombus within the reperfusion scaffold, thereby increasing a diameter of a flow path established by the reperfusion scaffold; deploying the reperfusion device within the thrombus, thereby compressing the thrombus against the inner vessel wall and establishing one or more blood flow channels through the thrombus, wherein the one or more blood flow channels facilitate natural lysis of the thrombus; removing the reperfusion device; inserting an expandable thrombus removal device within the blood vessel to the location ofthe thrombus, wherein the expandable thrombus removal device comprises an expandable removal scaffold having a plurality of interconnected struts that form cells having a cell size that is sized and configured to allow thrombus penetration within the cells, thereby facilitating engagement ofthe thrombus by the removal scaffold; deploying the thrombus removal device within a remaining portion of the thrombus, thereby engaging the remaining portion of the thrombus; extracting the remaining portion of the thrombus engaged by the thrombus removal device from the blood vessel; and removing the thrombus removal device.

Regarding claim 64, the prior art of record, individually or in combination, does not teach or fairly suggest a method of using a plurality of expandable tip assemblies adapted to address an occlusive thrombus within a blood vessel for providing progressive therapy, the method comprising inserting an expandable reperfusion device within an occluded blood vessel having a thrombus; positioning the expandable reperfusion device to span at least a portion of a length ofthe thrombus; wherein the expandable reperfusion device comprises a self-expanding reperfusion scaffold having a plurality of interconnected struts that form cells sized and configured to inhibit protrusion of the thrombus into the reperfusion scaffold, thereby increasing a diameter of a flow path established by the reperfusion scaffold; deploying the reperfusion device within the thrombus, thereby compressing the thrombus against the inner vessel wall and establishing blood flow through the occluded blood vessel, wherein the established blood flow facilitates natural lysis ofthe thrombus; macerating the thrombus; wherein at least one ofthe natural lysis and the maceration fragment the thrombus until only a portion ofthe thrombus remains; removing the reperfusion device; inserting a thrombus removal device within the blood vessel to span at least a portion of a length of the remaining thrombus, wherein the thrombus removal device comprises a self-expanding removal scaffold having a plurality of interconnected struts that form cells having a cell size that is sized and configured to allow thrombus protrusion within the cells, thereby facilitating engagement ofthe remaining thrombus by the removal scaffold; deploying the thrombus removal device within the remaining thrombus to engage the remaining thrombus; and removing the thrombus removal device, thereby extracting the remaining thrombus.

Regarding claim 73, the prior art of record, individually or in combination, does not teach or fairly suggest a thrombus management method for addressing an occlusive thrombus within a blood vessel without distal embolic protection, the method comprising: identifying a cerebral artery having an occlusive thrombus; inserting a guide catheter into a patient; inserting a guide wire through the guide catheter into the cerebral artery and through the thrombus; inserting a microcatheter over the guidewire and through the thrombus; positioning a distal end of the microcatheter within about a centimeter past the thrombus; inserting an expandable tip assembly comprising a scaffold through the microcatheter; retracting the microcatheter, thereby causing the scaffold to expand; wherein said expansion compresses the thrombus against a wall of the cerebral artery; wherein said compression of the thrombus restores blood flow within the cerebral artery; wherein said restored blood flow facilitates natural lysis ofthe thrombus; and macerating the thrombus by resheathing the scaffold and unsheathing the scaffold, thereby facilitating mechanical lysis and fragmentation of the thrombus to release embolic particles; wherein the embolic particles flow in the direction of the blood flow and are not captured by any distal embolic protection member, but are instead lysed through the natural lysis process due to the restored blood flow.

Regarding claim 77, the prior art of record, individually or in combination, does not teach or fairly suggest a thrombus management method for addressing an occlusive thrombus within a blood vessel, the method comprising identifying an occluded blood vessel having an occlusive thrombus; selecting an expandable tip assembly based, at least in part, on a diameter of the identified occluded blood vessel, the expandable tip assembly comprising a proximal elongate member and a distal self-expanding scaffold; inserting the selected expandable tip assembly within the occluded vessel through a microcatheter such that the self-expanding scaffold is positioned at a location of the thrombus in a non-expanded configuration; retracting the microcatheter, thereby causing the scaffold to expand to an expanded configuration; wherein said expansion compresses the thrombus against a wall of the blood vessel; wherein said compression of the thrombus restores blood flow within the blood vessel; wherein said restored blood flow facilitates natural lysis of the thrombus; and macerating the thrombus by resheathing the self-expanding scaffold and unsheathing the self-expanding scaffold within the microcatheter, thereby facilitating mechanical lysis and fragmentation of the thrombus.

Regarding claim 83, the prior art of record, individually or in combination, does not teach or fairly suggest a thrombus management method for addressing an occlusive thrombus within a blood vessel by providing multiple layer embolus removal, comprising identifying an embolus within a cerebral artery; inserting an expandable reperfusion device within the cerebral artery to the location of the embolus; expanding the reperfusion device within the embolus, thereby establishing one or more blood flow channels through the embolus, wherein the one or more blood flow channels facilitate natural lysis of the embolus to remove one or more outer layers of the embolus; removing the reperfusion device; inserting an expandable embolus removal device within the cerebral artery to the location of the embolus; expanding the embolus removal device within a remaining portion of the embolus, thereby engaging the remaining portion of the embolus; extracting the remaining portion of the embolus with the embolus removal device from the cerebral artery; and removing the embolus removal device.

**Supplemental Box**

**In case the space in any of the preceding boxes is not sufficient.**
Continuation of:

Regarding claim 92, the prior art of record, individually or in combination, does not teach or fairly suggest a thrombus management method for addressing an occlusive thrombus within a blood vessel by providing multiple layer embolus removal from a cerebral artery, comprising identifying an embolus within a cerebral artery; wherein the embolus comprises an outer layer and an inner core; establishing one or more blood flow channels through the embolus to restore blood flow; disturbing the embolus by mechanical maceration of the embolus to release embolic particles from the outer layer of the embolus, thereby allowing the embolic particles to freely flow in the direction of the blood flow without capturing said embolic particles; wherein said restored blood flow causes lysis of the embolic particles; and extracting the inner core of the embolus.

Claims 2-32, 35-48, 55-63, 65-72, 74-76, 78-82, 84-91, 93-101, and 103-104 depend from base Claims 1, 33, 34, 54, 64, 73, 77, 83 and 92, and therefore have novelty for at least the same reasons as do base Claims 1, 33, 34, 54, 64, 73, 77, 83 and 92.

The following prior art is made of record to support and further define the reasons for allowance of base Claims 1, 33, 34, 54, 64, 73, 77, 83 and 92:

(i) Fulkerson discloses an expandable tip assembly adapted to address an occlusive thrombus (Title; Abstract) within a blood vessel without distal embolic protection (Fig. 1 shows no distal embolic protection, ie- screen or filter), comprising a hypotube (Para. [0047] The instant revascularization system delivery device may be made from materials knownto artisans, including stainless steel hypotube, stainless steel coil, polymerjackets, and/or radiopaque jackets; Para. [0050] distal segment 120 comprises inner catheter 122 and revascularization device 124 (as shown here in one embodiment having uniform cells, variable cells likewise being within)) having a proximal portion (Para. [0049] proximal segment 110 and distal segment 120), a distal portion (Para. [0049]) and a lumen (Para. [0047] delivery device 130 provides a conduit in fluid communication with the lumen of the catheter-based revascularization system 100 enabling users) sized and adapted to receive a guidewire (Para. [0003] catheter systems having guidewires to access and emplace improved neurological medical devices into the cerebral vasculature); an expandable and reconstrainable scaffold coupled to the distal end of the hypotube, the scaffold being adapted to radially self-expand from a non-expanded configuration to an expanded configuration upon unsheathing of the scaffold and to transition from the expanded configuration to the non-expanded configuration upon resheathing of the scaffold (Para. [0057] After the embolus is lysed, revascularization device 124 is sheathed into outer catheter 112 and removed from the body); wherein the scaffold comprises a generally cylindrical configuration (Fig. 2 at 120); wherein the scaffold comprises a laser-cut tube (Para. [0050] is made from stainless steel coil, stainless steel wire, or ribbon or laser cut hypotube and is of a suitable length and diameter to move through outer catheter 112 during deployment); wherein the scaffold comprises an open distal end without a distal embolic protection member or device (Fig. 2 shows open distal end without distal embolic protection member); wherein a proximal end of the scaffold comprises a cut-out section adapted to facilitate re-sheathing of the scaffold (Para. [0057] After the embolus is lysed, revascularization device 124 is sheathed into outer catheter 112 and removed from the body); wherein the scaffold comprises a plurality of open cells defined by struts and connected by bridges (Fig. 2 defined by the open spaces in 124); but the prior art of record, individually or in combination, does not teach or fairly suggest a variable-stiffness hypotube wherein the distal portion of the hypotube has a greater flexibility than the proximal portion; wherein the greater flexibility is provided by spiral laser cuts spaced along the distal portion of the hypotube; wherein each strut has two ends, with each end connected to one of the bridges; wherein the scaffold has a chronic outward force (COF) per unit length that does not decrease by more than 75% from an expansion diameter of 1.5 mm to an expansion diameter of 4.5 mm; and wherein the open cells are sized to promote at least one of vessel reperfusion or thrombus removal wherein the spacing between the spiral cuts decreases from a proximal end of the distal portion to a distal end of the distal portion.

(ii) Fulkerson discloses an expandable tip assembly configured to address an occlusive thrombus (Title; Abstract) within a blood vessel without distal embolic protection (Fig. 1 shows no distal embolic protection, ie- screen or filter), comprising an elongate member (Fig. 1 at 110); an expandable and reconstrainable scaffold coupled to the distal end of the hypotube (Fig. 2 at 120), the scaffold being adapted to radially self-expand from a non-expanded configuration to an expanded configuration (Para. [0007] a self-expanding radial filter/revascularization device and basket assembly detachably tethered to the catheter system which functions in at least three respective modes) and to transition from the expanded configuration to the non-expanded configuration upon unsheathing and re-sheathing of the scaffold (Para. [0057] After the embolus is lysed, revascularization device 124 is sheathed into outer catheter 112 and removed from the body); wherein the scaffold comprises a laser-cut tube (Para. [0050] is made from stainless steel coil, stainless steel wire, or ribbon or laser cut hypotube and is of a suitable length and diameter to move through outer catheter 112 during deployment); wherein the scaffold is coupled to the distal end of the elongate member by a plurality of tether lines (Fig. 2 where 122 has tether lines to 124); wherein the scaffold comprises an open distal end without a distal embolic protection member or device (Fig. 2 shows open distal end without distal embolic protection member); wherein the scaffold comprises a plurality of open cells defined by struts and connected by bridges (Fig. 2 defined by the open spaces in 124), but the prior art of record, individually or in combination, does not teach or fairly suggest wherein a proximal end of the scaffold comprises a scooped-out section configured to facilitate re-sheathing of the scaffold; wherein each strut has two ends, with each end connected to one of the bridges; and wherein the open cells are sized to promote at least one of vessel reperfusion or thrombus removal.

**Supplemental Box**

**In case the space in any of the preceding boxes is not sufficient.**
Continuation of:

(iii) Fulkerson discloses a system comprising a plurality of expandable tip assemblies configured to address an occlusive thrombus (Title; Abstract) within a blood vessel for providing progressive therapy without distal embolic protection (Fig. 1 shows no distal embolic protection, ie- screen or filter), the system comprising a first expandable tip assembly comprising a first elongate member (Fig. 1 at 110) and a first self-expanding scaffold (Fig. 2 at 120); wherein the first self-expanding scaffold is coupled to a distal end of the first elongate member (Fig. 2); wherein the first self-expanding scaffold comprises an open distal end without a distal embolic protection member or device (Fig. 2 shows open distal end without distal embolic protection member); wherein the first self-expanding scaffold comprises open cells formed by a pattern of struts and bridges (Fig. 2 defined by the open spaces in 124), but the prior art of record, individually or in combination, does not teach or fairly suggest wherein said cells have a cell size configured to hinder penetration of thrombus material within the first self-expanding scaffold, thereby increasing an amount of blood flow through the first self-expanding scaffold; and a second expandable tip assembly comprising a second elongate member and a second self-expanding scaffold; herein the second self-expanding scaffold is coupled to a distal end of the second elongate member; wherein the second self-expanding scaffold comprises an open distal end without a distal embolic protection member or device; wherein the second self-expanding scaffold comprises open cells formed by a pattern of struts and bridges, wherein said cells have a cell size larger than the cell size of the first self-expanding scaffold, wherein said cell size of the second self-expanding scaffold is configured to enhance penetration of thrombus material within the scaffold to facilitate capture of the thrombus; wherein, in use, the first self-expanding scaffold and the second self-expanding scaffold are adapted to radially self-expand from a non-expanded configuration to an expanded configuration and to transition from the expanded configuration to the nonexpanded configuration upon unsheathing and re-sheathing of the first and second self expanding scaffolds.

(iv) Brady discloses an expandable tip assembly configured to address an occlusive thrombus (Title; Abstract) within a blood vessel, but with distal embolic protection (Fig. 1 shows a retractable guidewire tip, but with a distal embolic protection, ie- screen or filter), comprising an elongate member (Fig. 1 at 101); the scaffold being adapted to radially self-expand from a non-expanded configuration to an expanded configuration (Para. [0066]) a self-expanding radial filter/revascularization device and basket assembly detachably tethered to the catheter system which functions in at least three respective modes and to transition from the expanded configuration to the non-expanded configuration upon unsheathing and re-sheathing of the scaffold (Para. [0066] The support frame 111 is such that it is naturally expanded as shown in the drawings and can be collapsed inwardly against the sleeve 104); wherein the scaffold comprises a laser-cut tube (Para. [0074] Typically the finishing operations involve processes such as mechanical machining operations, laser machining or chemical machining); wherein the scaffold is coupled to the distal end of the elongate member by a plurality of tether lines (Fig. 1 where 111 has tether lines to 125), but the prior art of record, individually or in combination, does not teach or fairly suggest the device wherein the scaffold comprises an open distal end without a distal embolic protection member or device; wherein the scaffold comprises a plurality of open cells defined by struts and connected by bridges, wherein a proximal end of the scaffold comprises a scooped-out section configured to facilitate re-sheathing of the scaffold; wherein each strut has two ends, with each end connected to one of the bridges; and wherein the open cells are sized to promote at least one of vessel reperfusion or thrombus removal or an expandable and reconstrainable scaffold coupled to the distal end of the hypotube.

Claims 1-48, 54-101, and 103-104 meet the criteria set out in PCT Article 33(4) and thus have industrial applicability because the subject matter claimed can be made or used in industry.

# Claims as Filed in PCT/US2010/062532

**WHAT IS CLAIMED IS:**

1. An expandable tip assembly adapted to address an occlusive thrombus within a blood vessel without distal embolic protection, comprising:

a variable-stiffness hypotube having a proximal portion, a distal portion and a lumen sized and adapted to receive a guidewire;

wherein the distal portion of the hypotube has a greater flexibility than the proximal portion;

wherein the greater flexibility is provided by spiral laser cuts spaced along the distal portion of the hypotube;

wherein the spacing between the spiral cuts decreases from a proximal end of the distal portion to a distal end of the distal portion;

an expandable and reconstrainable scaffold coupled to the distal end of the hypotube, the scaffold being adapted to radially self-expand from a non-expanded configuration to an expanded configuration upon unsheathing of the scaffold and to transition from the expanded configuration to the non-expanded configuration upon re-sheathing of the scaffold;

wherein the scaffold comprises a generally cylindrical configuration;

wherein the scaffold comprises a laser-cut tube;

wherein the scaffold comprises an open distal end without a distal embolic protection member or device;

wherein a proximal end of the scaffold comprises a cut-out section adapted to facilitate re-sheathing of the scaffold;

wherein the scaffold comprises a plurality of open cells defined by struts and connected by bridges;

wherein each strut has two ends, with each end connected to one of the bridges;

wherein the scaffold has a chronic outward force (COF) per unit length that does not decrease by more than 75% from an expansion diameter of 1.5 mm to an expansion diameter of 4.5 mm; and

wherein the open cells are sized to promote at least one of vessel reperfusion or thrombus removal.

2. The expandable tip assembly of Claim 1, wherein each bridge is connected to four struts.

3. The expandable tip assembly of Claim 1, wherein the scaffold is coupled to the distal end of the hypotube by a plurality of tether lines that extend eccentrically from one half of the distal end of the hypotube.

4. The expandable tip assembly of Claim 1, wherein the scaffold has a chronic outward force (COF) per unit length that does not decrease by more than 50% from a diameter of 1.5 mm to a diameter of 4.5 mm.

5. The expandable tip assembly of Claim 1, wherein the cells of the scaffold have a uniform cell size.

6. The expandable tip assembly of Claim 1, wherein the cells of the scaffold have a variable cell size, and further wherein the cell size of the cells at the end portions of the scaffold are smaller than the cell size of the cells of the middle portion of the scaffold.

7. The expandable tip assembly of Claim 1, wherein the strut thickness is substantially equal to the strut width.

8. The expandable tip assembly of Claim 1, wherein a ratio of strut thickness to strut width is less than at least about 1.4.

9. The expandable tip assembly of Claim 1, wherein the expandable tip assembly comprises a reperfusion device and wherein the cells of the scaffold have a cell size adapted to inhibit protrusion of portions of the thrombus within an interior of the scaffold.

10. The expandable tip assembly of Claim 9, wherein the cells of the scaffold have a cell length of between 2 mm and 4 mm and a cell height between 1 mm and 3 mm in the expanded configuration.

11. The expandable tip assembly of Claim 9, wherein the scaffold has an average chronic outward force across a diameter of 1.5 mm to 4.5 mm of between 0.0040 N and 0.0120 N.

12. The expandable tip assembly of Claim 9, wherein the scaffold has a maximum expansion diameter of 5 mm.

13. The expandable tip assembly of Claim 9, wherein the scaffold has a length of about 30 mm.

14. The expandable tip assembly of Claim 9, wherein an exterior, contact surface of the struts comprises a squared-off or rounded configuration to increase the contact surface area of the scaffold, thereby enhancing compression of the thrombus.

15. The expandable tip assembly of Claim 9, wherein an exterior, contact surface of the struts comprises a pointed or tapered configuration.

16. The expandable tip assembly of Claim 1, wherein the expandable tip assembly comprises a thrombus removal device, and wherein the cells of the scaffold have a cell size adapted to promote protrusion of portions of the thrombus within an interior of the scaffold.

17. The expandable tip assembly of Claim 16, wherein the cells of the scaffold have a cell length of between 4 mm and 6 mm and a cell height between 2 mm and 4 mm in the expanded configuration.

18. The expandable tip assembly of Claim 16, wherein the scaffold has an average chronic outward force across a diameter of 1.5 mm to 4.5 mm of between 0.0020 N and 0.0090 N.

19. The expandable tip assembly of Claim 16, wherein an exterior, contact surface of the struts comprises a pointed or tapered configuration.

20. The expandable tip assembly of Claim 16, wherein the struts comprise one or more surface features adapted to enhance engagement of thrombus material.

21. The expandable tip assembly of Claim 20, wherein the struts comprise one or more grooves.

22. The expandable tip assembly of Claim 20, wherein the struts comprise one or more protrusions or projections.

23. The expandable tip assembly of Claim 16, wherein a central portion of each strut of the scaffold has a greater thickness than adjacent portions of the strut.

24. The expandable tip assembly of Claim 16, wherein the struts comprise multiple flex points along the length of the struts.

25. The expandable tip assembly of Claim 16, wherein the bridges form X-shaped connections between the cells of the scaffold.

26. The expandable tip assembly of Claim 16, wherein the bridges have a greater thickness than adjacent portions of the struts connected to the bridges.

27. The expandable tip assembly of Claim 16, wherein the scaffold has a maximum expansion diameter of 3 mm

28. The expandable tip assembly of Claim 16, wherein the scaffold has a maximum expansion diameter of 5 mm.

29. The expandable tip assembly of Claim 16, wherein the scaffold has a length of about 30 mm.

30. A method of using an expandable tip assembly as in any one of Claims 1 through 29 to address an occlusive thrombus within a blood vessel.

31. A method of using an expandable tip assembly as in any one of Claims 1 through 15 to reperfuse an occluded blood vessel having an occlusive thrombus.

32. A method of using an expandable tip assembly as in any one of Claims 1 through 8 or Claims 16 through 29 to extract thrombus material from an occluded blood vessel.

33. An expandable tip assembly configured to address an occlusive thrombus within a blood vessel without distal embolic protection, comprising:

an elongate member;

an expandable and reconstrainable scaffold coupled to the distal end of the hypotube, the scaffold being adapted to radially self-expand from a non-expanded configuration to an expanded configuration and to transition from the expanded configuration to the non-expanded configuration upon unsheathing and re-sheathing of the scaffold;

wherein the scaffold comprises a laser-cut tube;

wherein the scaffold is coupled to the distal end of the elongate member by a plurality of tether lines;

wherein the scaffold comprises an open distal end without a distal embolic protection member or device;

wherein a proximal end of the scaffold comprises a scooped-out section configured to facilitate re-sheathing of the scaffold;

wherein the scaffold comprises a plurality of open cells defined by struts and connected by bridges;

wherein each strut has two ends, with each end connected to one of the bridges; and

wherein the open cells are sized to promote at least one of vessel reperfusion or thrombus removal.

34. A system comprising a plurality of expandable tip assemblies configured to address an occlusive thrombus within a blood vessel for providing progressive therapy without distal embolic protection, the system comprising:

a first expandable tip assembly comprising a first elongate member and a first self-expanding scaffold;

wherein the first self-expanding scaffold is coupled to a distal end of the first elongate member;

wherein the first self-expanding scaffold comprises an open distal end without a distal embolic protection member or device;

wherein the first self-expanding scaffold comprises open cells formed by a pattern of struts and bridges, wherein said cells have a cell size configured to hinder penetration of thrombus material within the first self-expanding scaffold, thereby increasing an amount of blood flow through the first self-expanding scaffold; and

a second expandable tip assembly comprising a second elongate member and a second self-expanding scaffold;

wherein the second self-expanding scaffold is coupled to a distal end of the second elongate member;

wherein the second self-expanding scaffold comprises an open distal end without a distal embolic protection member or device;

wherein the second self-expanding scaffold comprises open cells formed by a pattern of struts and bridges, wherein said cells have a cell size larger than the cell size of the first self-expanding scaffold, wherein said cell size of the second self-expanding scaffold is configured to enhance penetration of thrombus material within the scaffold to facilitate capture of the thrombus;

wherein, in use, the first self-expanding scaffold and the second self-expanding scaffold are adapted to radially self-expand from a non-expanded configuration to an expanded configuration and to transition from the expanded configuration to the non-expanded configuration upon unsheathing and re-sheathing of the first and second self-expanding scaffolds.

35. The system of Claim 34, further comprising a microcatheter adapted to receive the first and second self-expanding scaffolds and further adapted to be movable with respect to the first and second self-expanding scaffolds to provide the unsheathing and re-sheathing of the first and second self-expanding scaffolds.

36. The system of Claim 34 or 35, wherein the first elongate member and the second elongate member comprise a variable-stiffness hypotube having a lumen.

37. The system of Claim 36, further comprising a guidewire configured to be received by the first elongate member and the second elongate member.

38. The system of Claim 36, wherein a distal section of the variable-stiffness hypotube comprises a laser spiral cut pattern that allows the distal section to bend to navigate through curved portions of the cerebral vasculature.

39. The system of Claim 38, wherein said laser spiral cut pattern spans a length of about 35 cm.

40. The system of Claim 34 or 35, wherein the first elongate member and the second elongate member comprise a wire without a lumen.

41. The system of Claim 34 or 35, wherein the first expandable tip assembly and the second expandable tip assembly have an average chronic outward force across a diameter of 1.5 mm to 4.5 mm that does not decrease by more than 50% to 75%.

42. The system of Claim 34 or 35, wherein the first self-expanding scaffold and the second self-expanding scaffold have a substantially non-zero chronic outward force across a diameter of 1.5 mm to 4.5 mm.

43. The system of Claim 34 or 35, wherein the cells of the first self-expanding scaffold have a cell length of between 2 mm and 4 mm and a cell height between 1 mm and 3 mm in an expanded configuration.

44. The system of Claim 34 or 35, wherein the first self-expanding scaffold has an average chronic outward force across a diameter of 1.5 mm to 4.5 mm of between 0.0040 N and 0.0120 N.

45. The system of Claim 34 or 35, wherein the cells of the second self-expanding scaffold have a cell length of between 4 mm and 6 mm and a cell height between 2 mm and 4 mm in an expanded configuration.

46. The system of Claim 34 or 35, wherein the second self-expanding scaffold has an average chronic outward force across a diameter of 1.5 mm to 4.5 mm of between 0.0020 N and 0.0090 N.

47. The system of Claim 34 or 35, wherein a central portion of each strut of the second self-expanding scaffold has a greater thickness than adjacent portions of the strut.

48. The system of Claim 34 or 35, wherein the first expandable tip assembly comprises a reperfusion device adapted to facilitate blood flow restoration and the second expandable tip assembly comprises a thrombus removal device adapted to be inserted after removal of the reperfusion device, wherein the thrombus removal device is further adapted to facilitate removal of any remaining thrombus material.

49. A kit comprising a plurality of expandable tip assemblies configured to address an occlusive thrombus within a blood vessel for providing progressive therapy without distal embolic protection, the kit comprising:

a first expandable tip assembly as in any one of Claims 1 through 15;

a second expandable tip assembly as in any one of Claims 1 through 8 or Claims 16 through 29.

50. The kit of Claim 49, further comprising a microcatheter adapted to deliver the first expandable tip assembly and the second expandable tip assembly within the blood vessel.

51. The kit of Claim 50, wherein the microcatheter comprises a neuro-microcatheter sized to be inserted within cerebral vasculature of a human patient.

52. The kit of any one of Claims 49-51, further comprising a guide catheter.

53. The kit of any one of Claims 49-51, further comprising a guidewire.

54. A method of using a plurality of expandable tip assemblies adapted to address an occlusive thrombus within a blood vessel for providing progressive therapy, the method comprising:

identifying a thrombus within a blood vessel;

inserting an expandable reperfusion device within the blood vessel to the location of the thrombus,

wherein the expandable reperfusion device comprises an expandable reperfusion scaffold having a plurality of interconnected struts that form cells having a cell size that

is sized and configured to reduce protrusion of the thrombus within the reperfusion scaffold, thereby increasing a diameter of a flow path established by the reperfusion scaffold;

deploying the reperfusion device within the thrombus, thereby compressing the thrombus against the inner vessel wall and establishing one or more blood flow channels through the thrombus,

wherein the one or more blood flow channels facilitate natural lysis of the thrombus;

removing the reperfusion device;

inserting an expandable thrombus removal device within the blood vessel to the location of the thrombus,

wherein the expandable thrombus removal device comprises an expandable removal scaffold having a plurality of interconnected struts that form cells having a cell size that is sized and configured to allow thrombus penetration within the cells, thereby facilitating engagement of the thrombus by the removal scaffold;

deploying the thrombus removal device within a remaining portion of the thrombus, thereby engaging the remaining portion of the thrombus;

extracting the remaining portion of the thrombus engaged by the thrombus removal device from the blood vessel; and

removing the thrombus removal device.

55. The method of Claim 54, wherein the expandable reperfusion device and the expandable thrombus removal device comprise self-expanding devices.

56. The method of Claim 55, wherein the expandable reperfusion device and the expandable thrombus removal device are inserted into the blood vessel within a microcatheter to the location of the thrombus.

57. The method of Claim 56, wherein deploying the reperfusion device comprises retracting the microcatheter, thereby allowing the reperfusion device to expand within the thrombus.

58. The method of Claim 56, wherein deploying the thrombus removal device comprises retracting the microcatheter, thereby allowing the thrombus removal device to expand within the thrombus.

59. The method of Claim 56, wherein removing the reperfusion device comprises resheathing the reperfusion device by advancing the microcatheter over the reperfusion device while keeping the reperfusion device stationary and then removing the microcatheter with the reperfusion device together.

60. The method of Claim 54, wherein an expansion diameter of the reperfusion device is configured to provide increased cell deformation of the reperfusion scaffold, thereby reducing protrusion of thrombus material within the reperfusion scaffold.

61. The method of Claim 54, wherein an expansion diameter of the thrombus removal device is configured to provide reduced cell deformation of the removal scaffold, thereby increasing thrombus penetration within the removal scaffold.

62. The method of Claim 57, further comprising resheathing the reperfusion device within the microcatheter by advancing the microcatheter and then unsheathing the reperfusion device by retracting the microcatheter to provide maceration of the thrombus.

63. The method of Claim 54, wherein the cells of the reperfusion scaffold in an expanded configuration have a cell length of between 2 mm and 4 mm and a cell height between 1 mm and 3 mm and wherein the cells of the removal scaffold in an expanded configuration have a cell length of between 4 mm and 6 mm and a cell height between 2 mm and 4 mm.

64. A method of using a plurality of expandable tip assemblies adapted to address an occlusive thrombus within a blood vessel for providing progressive therapy, the method comprising:

inserting an expandable reperfusion device within an occluded blood vessel having a thrombus;

positioning the expandable reperfusion device to span at least a portion of a length of the thrombus;

wherein the expandable reperfusion device comprises a self-expanding reperfusion scaffold having a plurality of interconnected struts that form cells sized and configured to inhibit protrusion of the thrombus into the reperfusion scaffold, thereby increasing a diameter of a flow path established by the reperfusion scaffold;

deploying the reperfusion device within the thrombus, thereby compressing the thrombus against the inner vessel wall and establishing blood flow through the occluded blood vessel,

wherein the established blood flow facilitates natural lysis of the thrombus;

macerating the thrombus;

wherein at least one of the natural lysis and the maceration fragment the thrombus until only a portion of the thrombus remains;

removing the reperfusion device;

inserting a thrombus removal device within the blood vessel to span at least a portion of a length of the remaining thrombus,

wherein the thrombus removal device comprises a self-expanding removal scaffold having a plurality of interconnected struts that form cells having a cell size that is sized and configured to allow thrombus protrusion within the cells, thereby facilitating engagement of the remaining thrombus by the removal scaffold;

deploying the thrombus removal device within the remaining thrombus to engage the remaining thrombus; and

removing the thrombus removal device, thereby extracting the remaining thrombus.

65. The method of Claim 64, wherein macerating the thrombus comprises sheathing and unsheathing of the reperfusion scaffold, wherein said sheathing and unsheathing causes the reperfusion scaffold to compress and expand.

66. The method of Claim 64 or Claim 65, wherein the reperfusion device and the thrombus removal device are inserted into the blood vessel within a microcatheter.

67. The method of Claim 66, wherein deploying the reperfusion device comprises retracting the microcatheter, thereby allowing the reperfusion device to expand within the thrombus.

68. The method of Claim 66, wherein deploying the thrombus removal device comprises retracting the microcatheter, thereby allowing the thrombus removal device to expand within the thrombus.

69. The method of Claim 67, wherein removing the reperfusion device comprises resheathing the reperfusion device by advancing the microcatheter over the reperfusion

device while keeping the reperfusion device stationary and then removing the microcatheter with the reperfusion device together.

70. The method of Claim 66, wherein an expansion diameter of the reperfusion device is configured to provide increased cell deformation of the reperfusion scaffold, thereby reducing thrombus penetration within an interior of the reperfusion scaffold.

71. The method of Claim 64, wherein an expansion diameter of the thrombus removal device is configured to provide reduced cell deformation of the removal scaffold, thereby increasing thrombus protrusion within the removal scaffold.

72. The method of Claim 64, wherein the cells of the expandable reperfusion device in an expanded configuration have a cell length of between 2 mm and 4 mm and a cell height between 1 mm and 3 mm and wherein the cells of the expandable thrombus removal device in an expanded configuration have a cell length of between 4 mm and 6 mm and a cell height between 2 mm and 4 mm.

73. A thrombus management method for addressing an occlusive thrombus within a blood vessel without distal embolic protection, the method comprising:

identifying a cerebral artery having an occlusive thrombus;

inserting a guide catheter into a patient;

inserting a guide wire through the guide catheter into the cerebral artery and through the thrombus;

inserting a microcatheter over the guidewire and through the thrombus;

positioning a distal end of the microcatheter within about a centimeter past the thrombus;

inserting an expandable tip assembly comprising a scaffold through the microcatheter;

retracting the microcatheter, thereby causing the scaffold to expand;

wherein said expansion compresses the thrombus against a wall of the cerebral artery;

wherein said compression of the thrombus restores blood flow within the cerebral artery;

wherein said restored blood flow facilitates natural lysis of the thrombus; and

macerating the thrombus by resheathing the scaffold and unsheathing the scaffold, thereby facilitating mechanical lysis and fragmentation of the thrombus to release embolic particles;

wherein the embolic particles flow in the direction of the blood flow and are not captured by any distal embolic protection member, but are instead lysed through the natural lysis process due to the restored blood flow.

74. The thrombus management method of Claim 73, further comprising engaging any remaining thrombus material and removing the remaining thrombus material with the expandable tip assembly.

75. The thrombus management method of Claim 73, further comprising removing the expandable tip assembly and inserting a second expandable tip assembly into the microcatheter, the second expandable tip assembly having a self-expanding scaffold with cells having a cell size configured to increase penetration of the remaining thrombus material into the cells to facilitate capture of the remaining thrombus material.

76. The thrombus management method of Claim 75, further comprising engaging any remaining thrombus material and removing the remaining thrombus material with the second expandable tip assembly.

77. A thrombus management method for addressing an occlusive thrombus within a blood vessel, the method comprising:

identifying an occluded blood vessel having an occlusive thrombus;

selecting an expandable tip assembly based, at least in part, on a diameter of the identified occluded blood vessel, the expandable tip assembly comprising a proximal elongate member and a distal self-expanding scaffold;

inserting the selected expandable tip assembly within the occluded vessel through a microcatheter such that the self-expanding scaffold is positioned at a location of the thrombus in a non-expanded configuration;

retracting the microcatheter, thereby causing the scaffold to expand to an expanded configuration;

wherein said expansion compresses the thrombus against a wall of the blood vessel;

wherein said compression of the thrombus restores blood flow within the blood vessel;

wherein said restored blood flow facilitates natural lysis of the thrombus; and

macerating the thrombus by resheathing the self-expanding scaffold and unsheathing the self-expanding scaffold within the microcatheter, thereby facilitating mechanical lysis and fragmentation of the thrombus.

78. The thrombus management method of Claim 77, further comprising engaging the remaining thrombus material and removing the remaining thrombus material with the expandable tip assembly.

79. The thrombus management method of Claim 77, further comprising removing the expandable tip assembly and inserting a second expandable tip assembly into the microcatheter, the second expandable tip assembly having a self-expanding scaffold with cells having a cell size configured to increase protrusion of the remaining thrombus material within the cells to facilitate capture of the remaining thrombus material.

80. The thrombus management method of Claim 79, further comprising removing the remaining thrombus material with the second expandable tip assembly.

81. The thrombus management method of any one of Claims 77 through 80, wherein the blood vessel comprises a cerebral artery, and wherein the proximal elongate member comprises a flexible, distal portion configured to navigate curved portions of cerebral vasculature during delivery to the cerebral artery.

82. The thrombus management method of Claim 77, wherein blood flow is restored in less than two minutes from deployment of the self-expanding scaffold within the thrombus.

83. A thrombus management method for addressing an occlusive thrombus within a blood vessel by providing multiple layer embolus removal, comprising:

identifying an embolus within a cerebral artery;

inserting an expandable reperfusion device within the cerebral artery to the location of the embolus;

expanding the reperfusion device within the embolus, thereby establishing one or more blood flow channels through the embolus,

wherein the one or more blood flow channels facilitate natural lysis of the embolus to remove one or more outer layers of the embolus;

removing the reperfusion device;

inserting an expandable embolus removal device within the cerebral artery to the location of the embolus;

expanding the embolus removal device within a remaining portion of the embolus, thereby engaging the remaining portion of the embolus;

extracting the remaining portion of the embolus with the embolus removal device from the cerebral artery; and

removing the embolus removal device.

84. The method of Claim 83, wherein the reperfusion device comprises an expandable tip assembly including a proximal elongate member and a distal self-expanding scaffold.

85. The method of Claim 84, wherein said scaffold comprises open cells having a cell size that is configured to decrease penetration of the embolus within the scaffold, thereby increasing blood flow through the scaffold.

86. The method of Claim 83, wherein the embolus removal device comprises an expandable tip assembly including a proximal elongate member and a distal self-expanding scaffold.

87. The method of Claim 86, wherein said scaffold comprises open cells having a cell size that is configured to increase protrusion of the remaining portion of the embolus within the scaffold to facilitate capture of the remaining portion of the embolus.

88. The method of Claim 84, wherein inserting an expandable reperfusion device within the cerebral artery to the location of the embolus comprises inserting the expandable reperfusion device through a microcatheter such that the self-expanding scaffold is in a non-expanded configuration.

89. The method of Claim 84, wherein expanding the reperfusion device within the embolus comprises retracting the microcatheter, thereby allowing the self-expanding scaffold to deploy to an expanded configuration.

90. The method of Claim 83, wherein the one or more outer layers of the embolus comprise platelets and red blood cells.

91. The method of Claim 83, wherein the remaining portion of the embolus comprises a firm fibrin core of the embolus.

92. A thrombus management method for addressing an occlusive thrombus within a blood vessel by providing multiple layer embolus removal from a cerebral artery, comprising:

identifying an embolus within a cerebral artery;

wherein the embolus comprises an outer layer and an inner core;

establishing one or more blood flow channels through the embolus to restore blood flow;

disturbing the embolus by mechanical maceration of the embolus to release embolic particles from the outer layer of the embolus, thereby allowing the embolic particles to freely flow in the direction of the blood flow without capturing said embolic particles;

wherein said restored blood flow causes lysis of the embolic particles; and

extracting the inner core of the embolus.

93. The method of Claim 92, wherein said restored blood flow causes further release of embolic particles from the outer layer of the embolus.

94. The method of Claim 92, wherein the outer layer of the embolus comprises a softer portion of the embolus than the inner core of the embolus.

95. The method of Claim 92, wherein the outer layer comprises platelets and red blood cells.

96. The method of Claim 92, wherein the inner core of the embolus comprises a fibrin core that has a hardness that exceeds the hardness of the outer layer of the embolus.

97. The method of any one of Claims 92 through 96, wherein establishing one or more blood flow channels through the embolus to facilitate natural lysis of the embolus comprises expanding an expandable reperfusion device within the embolus.

98. The method of Claim 97, further comprising macerating the embolus with the expandable reperfusion device.

99. The method of any one of Claims 92 through 96, wherein extracting a remaining portion of the embolus comprises expanding an expandable embolus removal device within the embolus to engage and capture the inner core of the embolus.

100. The expandable tip assembly of any one of Claims 1 through 8 or Claim 33, wherein the expandable tip assembly comprises a reperfusion device and wherein the cells of the scaffold have a cell size adapted to inhibit protrusion of portions of the thrombus within an interior of the scaffold.

101. The expandable tip assembly of any one of Claims 1 through 8 or Claim 33, wherein the expandable tip assembly comprises a thrombus removal device, and wherein the cells of the scaffold have a cell size adapted to promote protrusion of portions of the thrombus within an interior of the scaffold.

102. A method of using an expandable tip assembly as in Claim 100 or Claim 101 to address an occlusive thrombus within a blood vessel.

103. A method of using an expandable tip assembly as in Claim 100 to reperfuse an occluded blood vessel having an occlusive thrombus.

104. A method of using an expandable tip assembly as in Claim 101 to extract thrombus material from an occluded blood vessel.

UNITED STATES PATENT AND TRADEMARK OFFICE

UNITED STATES DEPARTMENT OF COMMERCE
United States Patent and Trademark Office
Address: COMMISSIONER FOR PATENTS
P.O. Box 1450
Alexandria, Virginia 22313-1450
www.uspto.gov

| APPLICATION NO. | FILING DATE | FIRST NAMED INVENTOR | ATTORNEY DOCKET NO. | CONFIRMATION NO. |
|---|---|---|---|---|
| 12/981,363 | 12/29/2010 | David A. Ferrera | MDFR.001P1P1C1 | 6425 |

20995 7590 05/03/2011
KNOBBE MARTENS OLSON & BEAR LLP
2040 MAIN STREET
FOURTEENTH FLOOR
IRVINE, CA 92614

| EXAMINER | |
|---|---|
| ART UNIT | PAPER NUMBER |
| 3734 | |

| NOTIFICATION DATE | DELIVERY MODE |
|---|---|
| 05/03/2011 | ELECTRONIC |

**Please find below and/or attached an Office communication concerning this application or proceeding.**

The time period for reply, if any, is set in the attached communication.

Notice of the Office communication was sent electronically on above-indicated "Notification Date" to the following e-mail address(es):

jcartee@kmob.com
efiling@kmob.com
eOAPilot@kmob.com

UNITED STATES PATENT AND TRADEMARK OFFICE

Commissioner for Patents
United States Patent and Trademark Office
P.O. Box 1450
Alexandria, VA 22313-1450
www.uspto.gov

KNOBBE MARTENS OLSON & BEAR LLP
2040 MAIN STREET
FOURTEENTH FLOOR
IRVINE CA 92614

| | | |
|---|---|---|
| In re Application of | : | |
| FERRERA, DAVID A. et al | : | DECISION ON REQUEST TO |
| Application No. 12/981,363 | : | PARTICIPATE IN PATENT |
| Filed: Dec. 29, 2010 | : | PCT/PROSECUTION HIGHWAY |
| Attorney Docket No. MDFR.001P1P1C1 | : | PROGRAM AND PETITION |
| For: MULTIPLE LAYER EMBOLUS REMOVAL | : | TO MAKE SPECIAL UNDER |
| | : | 37 CFR 1.102(a) |

This is a decision on the renewed request to participate in the Patent Prosecution Highway (PPH) program and the petition under 37 CFR 1.102(a), filed April 29, 2011 to make the above-identified application special.

The request and petition are granted.

A grantable request to participate in the PPH program and petition to make special require:
(1) The U.S. application must disclose an eligible relationship to one or more PCT applications filed in the JPO, EPO, KIPO or USPTO;
(2) Applicant must submit a copy of the allowable/patentable claim(s) from the PCT application(s) latest international work product (the written opinion or the IPER) along with an English translation thereof and a statement that the English translation is accurate;
(3) All the claims in the U.S. application must sufficiently correspond or be amended to sufficiently correspond to the allowable/patentable claim(s) in the PCT application(s);
(4) Examination of the U.S. application has not begun;
(5) Applicant must submit a copy of the latest international work product from the PCT application containing the allowable/patentable claim(s) along with an English translation thereof and a statement that the English translation is accurate; and
(6) Applicant must submit an IDS listing the documents cited by the PCT examiner in the international work product along with copies of documents except U.S. patents or U.S. patent application publications.

In light of the petition being properly submitted, the request to participate in the PPH program and the petition comply with the above requirements. Accordingly, the above-identified application has been accorded "special" status.

The applicant is encouraged to cite and submit all relevant prior art references, if any, to facilitate examination in this application.

Other inquiries concerning the examination or status of the application should be directed to Gary Jackson, the SPE of Art Unit 3734 at 571-272-4697 for Class 606/194 and also accessible in the PAIR system at http://www.uspto.gov/ebc.index.html.

All other inquiries concerning the examination or status of the application should be directed to the Patent Application Information Retrieval (PAIR) system.

This application will be forwarded and docketed to an examiner for action on the merits commensurate with this decision.

Telephone inquiries concerning this decision should be directed to Henry C. Yuen, at 571-272-4856.

The petition is **granted.**

/Henry C. Yuen/

Henry C. Yuen, Special Programs Examiner
Technology Center 3700 – Mechanical Engineering,
Manufacturing and Products
571-272-4856

| Doc Code: PET.AUTO<br>Document Description: Petition automatically granted by EFS-Web | PTO/SB/140<br>U.S. Patent and Trademark Office<br>Department of Commerce |
|---|---|

| | |
|---|---|
| Electronic Petition Request | **PETITION TO WITHDRAW AN APPLICATION FROM ISSUE AFTER PAYMENT OF THE ISSUE FEE UNDER 37 CFR 1.313(c)** |
| Application Number | 12981380 |
| Filing Date | 29-Dec-2010 |
| First Named Inventor | Jeffrey Solomon |
| Art Unit | 2824 |
| Examiner Name | ALEXANDER SOFOCLEOUS |
| Attorney Docket Number | NETL.18CPCPCCC2 |
| Title | CIRCUIT PROVIDING LOAD ISOLATION AND MEMORY DOMAIN TRANSLATION FOR MEMORY MODULE |

An application may be withdrawn from issue for further action upon petition by the applicant. To request that the Office withdraw an application from issue, applicant must file a petition under this section including the fee set forth in § 1.17(h) and a showing of good and sufficient reasons why withdrawal of the application from issue is necessary.

APPLICANT HEREBY PETITIONS TO WITHDRAW THIS APPLICATION FROM ISSUE UNDER 37 CFR 1.313(c).

A grantable petition requires the following items:
(1) Petition fee; and
(2) One of the following reasons:
(a) Unpatentability of one or more claims, which must be accompanied by an unequivocal statement that one or more claims are unpatentable, an amendment to such claim or claims, and an explanation as to how the amendment causes such claim or claims to be patentable;
(b) Consideration of a request for continued examination in compliance with § 1.114 (for a utility or plant application only); or
(c) Express abandonment of the application. Such express abandonment may be in favor of a continuing application, but not a CPA under 37 CFR 1.53(d).

Petition Fee

☐ Applicant claims SMALL ENTITY status. See 37 CFR 1.27.

☐ Applicant is no longer claiming SMALL ENTITY status. See 37 CFR 1.27(g)(2).

☐ Applicant(s) status remains as SMALL ENTITY.

☒ Applicant(s) status remains as other than SMALL ENTITY

Reason for withdrawal from issue

○ One or more claims are unpatentable

◉ Consideration of a request for continued examination (RCE) (List of Required Documents and Fees)

○ Applicant hereby expressly abandons the instant application (any attorney/agent signing for this reason must have power of attorney pursuant to 37 CFR 1.32(b)).

RCE request,submission, and fee.

☒ I certify, in accordance with 37 CFR 1.4(d)(4) that : The RCE request ,submission, and fee have already been filed in the above-identified application on 2011.06.21

☐ Are attached.

THIS PORTION MUST BE COMPLETED BY THE SIGNATORY OR SIGNATORIES

I certify, in accordance with 37 CFR 1.4(d)(4) that I am:

◉ An attorney or agent registered to practice before the Patent and Trademark Office who has been given power of attorney in this application.

○ An attorney or agent registered to practice before the Patent and Trademark Office, acting in a representative capacity.

○ A sole inventor

○ A joint inventor; I certify that I am authorized to sign this submission on behalf of all of the inventors

○ A joint inventor; all of whom are signing this e-petition

○ The assignee of record of the entire interest that has properly made itself of record pursuant to 37 CFR 3.71

| | |
|---|---|
| Signature | /Bruce S. Itchkawitz/ |
| Name | Bruce S. Itchkawitz |
| Registration Number | 47677 |

UNITED STATES PATENT AND TRADEMARK OFFICE

Commissioner for Patents
United States Patent and Trademark Office
P.O. Box 1450
Alexandria, VA 22313-1450
www.uspto.gov

Decision Date : June 20,2011

In re Application of :

Jeffrey Solomon

DECISION ON PETITION

UNDER CFR 1.313(c)(2)

Application No : 12981380

Filed : 29-Dec-2010

Attorney Docket No : NETL.18CPCPCCC2

This is an electronic decision on the petition under 37 CFR 1.313(c)(2), filed June 20,2011 , to withdraw the above-identified application from issue after payment of the issue fee.

The petition is **GRANTED.**

The above-identified application is withdrawn from issue for consideration of a submission under 37 CFR 1.114 (request for continued examination). See 37 CFR 1.313(c)(2).

**Petitioner is advised that the issue fee paid in this application cannot be refunded. If, however, this application is again allowed, petitioner may request that it be applied towards the issue fee required by the new Notice of Allowance.**

Telephone inquiries concerning this decision should be directed to the Patent Electronic Business Center (EBC) at 866-217-9197.

This application file is being referred to Technology Center AU 2824 for processing of the request for continuing examination under 37 CFR 1.114 .

Office of Petitions

UNITED STATES PATENT AND TRADEMARK OFFICE

Commissioner for Patents
United States Patent and Trademark Office
P.O. Box 1450
Alexandria, VA 22313-1450
www.uspto.gov

MAILED

MAR 14 2011

OFFICE OF PETITIONS

**FARIBA SIRJANI**
**925 DELWARE AVENUE, APT. 9C**
**BUFFALO, NY 14209**

| | | |
|---|---|---|
| In re Application of | : | |
| Farzan Fallah | : | |
| Application No. 12/981,391 | : | DECISION ON PETITION |
| Filed: December 29, 2010 | : | TO WITHDRAW |
| Attorney Docket No. Fallah-001 | : | FROM RECORD |
| | : | |

This is a decision on the Request to Withdraw as attorney or agent of record under 37 C.F.R. § 1.36(b), filed February 2, 2011.

The request is **APPROVED**.

A grantable request to withdraw as attorney/agent of record must be signed by every attorney/agent seeking to withdraw or contain a clear indication that one attorney is signing on behalf of another/others. A request to withdraw will not be approved unless at least 30 (thirty) days would remain between the date of approval and the later of the expiration date of a time to file a response or the expiration date of the maximum time period which can be extended under 37 C.F.R. § 1.136(a).

The request was signed by Fariba Sirjani. Fariba Sirjani have been withdrawn as attorney or agent of record; all other attorneys remain of record.

The correspondence address of record remains unchanged.

Telephone inquiries concerning this decision should be directed to Terri Johnson at 571-272-2991.

/Terri Johnson/
Terri Johnson
Petitions Examiner
Office of Petitions

cc: **MEREDITH & KEYHANI, PLLC**
**330 MADISON AVE.**
**6TH FLOOR**
**NEW YORK NY 10017**

**Doc Code: PET.GREEN**
**Document Description: Petition for Green Tech Pilot**

PTO/SB/420 (11-10)
Approved for use through 01/31/2011. OMB 0651-0062
U.S. Patent and Trademark Office; U. S. DEPARTMENT OF COMMERCE
Under the Paperwork Reduction Act of 1995, no persons are required to respond to a collection of information unless it displays a valid OMB control number.

# PETITION TO MAKE SPECIAL UNDER THE GREEN TECHNOLOGY PILOT PROGRAM

| | | |
|---|---|---|
| Attorney Docket Number: 057518-400370 | Application Number (if known): | Filing date: Herewith |
| First Named Inventor: Scott Franklin | | |
| Title: Renewable Chemical Production from Novel Fatty Acid Feedstocks | | |

**APPLICANT HEREBY REQUESTS TO PARTICIPATE IN THE GREEN TECHNOLOGY PILOT PROGRAM FOR THE ABOVE-IDENTIFIED APPLICATION. See Instruction Sheet on page 2.**

This petition must be timely filed electronically using the USPTO electronic filing system, EFS-Web.

1. By filing this petition:

   **Applicant is requesting early publication: Applicant hereby requests early publication under 37 CFR 1.219 and the publication fee set forth in 37 CFR 1.18(d) accompanies this request.**

2. By filing this petition: applicant is agreeing to make an election without traverse in a telephonic interview and elect an invention that meets the eligibility requirements for the Green Technology Pilot Program, if the Office determines that the claims are not obviously directed to a single invention. See Instruction Sheet.

3. This request is accompanied by statements of special status for the eligibility requirement.

4. The application contains no more than three (3) independent claims and twenty (20) total claims.

5. The application does not contain any multiple dependent claims.

6. Other attachments: _____

| | |
|---|---|
| Signature | Date December 29, 2010 |
| Name (Print/Typed) Lance A. Termes | Registration Number 43,184 |

***Note:*** *Signatures of all the inventors or assignees of record of the entire interest or their representative(s) are required in accordance with 37 CFR 1.33 and 11.18. Please see 37 CFR 1.4(d) for the form of the signature. If necessary, submit multiple forms for more than one signature see below*.*

[X] *Total of 1 forms are submitted.

The information is required to obtain or retain a benefit by the public which is to file (and by the USPTO to process) an application. Confidentiality is governed by 35 U.S.C. 122 and 37 CFR 1.11 and 1.14. This collection is estimated to take 12 hours to complete, including gathering, preparing, and submitting the completed application form to the USPTO. Time will vary depending upon the individual case. Any comments on the amount of time you require to complete this form and/or suggestions for reducing this burden, should be sent to the Chief Information Officer, U.S. Patent and Trademark Office, U.S. Department of Commerce, P.O. Box 1450, Alexandria, VA 22313-1450. DO NOT SEND FEES OR COMPLETED FORMS TO THIS ADDRESS. **SEND TO: Commissioner for Patents, P.O. Box 1450, Alexandria, VA 22313-1450.**

*If you need assistance in completing the form, call 1-800-PTO-9199 and select option 2.*

I hereby certify that this correspondence is being filed via EFS-Web with the United States Patent and Trademark Office on December 29, 2010.

TOWNSEND and TOWNSEND and CREW LLP

By: Raquel West

STATEMENT OF SPECIAL STATUS FOR ELIGIBILITY UNDER THE GREEN TECHNOLOGY PILOT PROGRAM

PATENT

Attorney Docket No.: 057518-400370

**IN THE UNITED STATES PATENT AND TRADEMARK OFFICE**

In re application of:

Scott Franklin et al.

Application No.: Unassigned

Filed: Herewith

For: RENEWABLE CHEMICAL PRODUCTION FROM NOVEL FATTY ACID FEEDSTOCKS

Customer No.: 89652

Confirmation No. Unassigned

Examiner: Unassigned

Art Unit: Unassigned

STATEMENT OF SPECIAL STATUS FOR ELIGIBILITY UNDER THE GREEN TECHNOLOGY PILOT PROGRAM

Commissioner for Patents
P.O. Box 1450
Alexandria, VA 22313-1450

Commissioner:

In connection with the accompanying Petition to Make Special Under the Green Technology Pilot Program, Applicants submit that the claimed invention set forth in the above-identified application is eligible for special status because the claimed invention materially contributes to development of renewable energy resources.

Because the above criteria is sufficient to meet the eligibility requirements of the Green Technology Pilot Program, as published in the Federal Register on December 8, 2009 at Vol. 74, No. 234, as revised in the notices published in the Federal Register on May 21, 2010 and November 10, 2010 at Vol 75, No. 98 and Vol. 75, No. 217, respectively, Applicants respectfully request grant of the accompanying Petition to Make Special Under the Green Technology Pilot Program.

***The Claimed Invention Materially Contributes to Development of Renewable Energy Resources***

The Federal Register notice (Vol. 74, No. 234, pp. 64666-64669, December 8, 2009) setting forth the eligibility requirements for the Green Technology Pilot Program states that "[p]atent applications are also eligible ... if the applications are for inventions that materially contribute to: (1) The discovery or *development of renewable energy resources*; (2) the more efficient utilization and conservation of energy resources; or (3) the reduction of greenhouse gas emissions." (emphasis added). For purposes of eligibility, the term "renewable energy resources" includes "*renewable biomass*." Federal Register, *supra*, at p. 64667.

Although the use of microorganisms for the production of oil has been the subject of extensive scientific investigation and inquiry, commercial applications of microorganisms for the production of oil have not previously been successfully implemented. Previous efforts have not been sufficiently cost effective or were unable to produce sufficient quantities of oil to make them commercially feasible.

The presently claimed invention is directed to methods of producing oleochemicals using triglyceride oils derived from microorganisms. As discussed in the application, microorganisms such as microalgae can be utilized in a commercially scalable process to produce triglyceride oils with desirable attributes for use as a feedstock in the production of oleochemicals. Thus, the claimed invention is directed to development of a *renewable biomass*, which comprises a renewable and sustainable source of triglyceride oils suitable for use in the production of oleochemicals.

Statistics published by the Energy Information Administration (2008 data) state that the United States consumes about 19.5 million barrels of petroleum per day. Fifteen percent of the petroleum (a non-renewable resource) consumption in the United States serves as feedstock for the production of oleochemicals. Oleochemicals include organic chemicals, plastics and resins, synthetic fibers, detergents, elastomers, and organic pigments and dyes, and are the basis for the production of a wide variety of consumer and industrial products. The triglyceride oils produced through cultivation of microalgae, as discussed in the present

application, are a renewable resource especially suited as a feedstock for the manufacture of oleochemicals in place of petroleum. The development and use of this renewable resource lessens dependence on non-renewable feedstocks such as petroleum. Thus, the claimed invention materially contributes to the *development of renewable energy resources*.

Please contact the undersigned at 650-838-2045 with any questions concerning these statements or the accompanying Petition to Make Special Under the Green Technology Pilot Program.

Respectfully submitted,

Lance A. Termes
Reg. No. 43,184

**ALSTON & BIRD LLP**
Bank of America Plaza
101 South Tryon Street, Suite 4000
Charlotte, NC 28280-4000
Tel: Silicon Valley Office (650) 838-2000
Fax: Charlotte Office (704) 444-1111

LAT

LEGAL02/32388616v1

UNITED STATES PATENT AND TRADEMARK OFFICE

UNITED STATES DEPARTMENT OF COMMERCE
United States Patent and Trademark Office
Address: COMMISSIONER FOR PATENTS
P.O. Box 1450
Alexandria, Virginia 22313-1450
www.uspto.gov

| APPLICATION NO. | FILING DATE | FIRST NAMED INVENTOR | ATTORNEY DOCKET NO. | CONFIRMATION NO. |
|---|---|---|---|---|
| 12/981,409 | 12/29/2010 | Scott Franklin | 057518-400370 | 6506 |

89652 7590 04/11/2011
Alston & Bird LLP/ Solazyme, Inc
Bank of America Plaza
101 South Tyson Street, suite 4000
Charlotte, NC 28280

| EXAMINER |
|---|

| ART UNIT | PAPER NUMBER |
|---|---|
| 1652 | |

| MAIL DATE | DELIVERY MODE |
|---|---|
| 04/11/2011 | PAPER |

**Please find below and/or attached an Office communication concerning this application or proceeding.**

The time period for reply, if any, is set in the attached communication.

UNITED STATES PATENT AND TRADEMARK OFFICE

Commissioner for Patents
United States Patent and Trademark Office
P.O. Box 1450
Alexandria, VA 22313-1450
www.uspto.gov

APR 1 1 2011

Alston & Bird LLP/ Solazyme, Inc
Bank of America Plaza
101 South Tyson Street, suite 4000
Charlotte NC 28280

| | | |
|---|---|---|
| In re Application of 12/981409 | : | |
| FRANKLIN, Scott *et al.* | : | DECISION ON PETITION |
| Application No. 12/981409 | : | TO MAKE SPECIAL UNDER |
| Filed: December 29, 2010 | : | THE GREEN TECHNOLOGY |
| Attorney Docket No. 057518-400370 | : | PILOT PROGRAM |

This is a decision on the petition under 37 CFR 1.102, filed December 29, 2010, to make the above-identified application special under the pilot program for applications pertaining to Green Technologies as set forth in 74 Federal Register Notice 64666 (December 8, 2009) and amended by 75 Federal Register Notice 28554 (May 21, 2010) and 75 Federal Register Notice 69049 (November 10, 2010).

The petition is **GRANTED**.

A grantable petition to make an application special under 37 CFR 1.102 and the pilot program as set forth in 74 FR 64666 must be directed to a nonprovisional application filed under 35 USC 111(a) or be a national stage entry under 35 USC 371, exclusive of any reissue applications.

In order to qualify for special status, the following requirements must be met. 1) The application must have no more than 3 independent claims and no more than 20 total claims. 2) The application must not contain any multiple dependent claims. 3) The petition must state the basis for seeking special status, i.e., the claimed invention either: A) materially enhances the quality of the environment or B) materially contributes to: i) the discovery or development of renewable energy resources, ii) the more efficient utilization and conservation of energy resources, or iii) greenhouse gas emission reduction. 4) If the disclosure is not clear on its face that the claimed invention materially contributes under category (A) or (B), the petition must be accompanied by a statement by the applicant, assignee, or an attorney/agent registered to practice before the Office explaining how the materiality standard is met. 5) A statement that applicant will agree to make an election without traverse in a telephonic interview if a restriction requirement is made by the examiner. 6) The petition to make special must be filed electronically. 7) The petition must be filed at least one day prior to the date that a first Office Action appears in the Patent Application Information Retrieval (PAIR) system. 8) The petition must be accompanied by a request for early publication in compliance with 37 CFR 1.219 and include the publication fee as set forth in 37 CFR 1.18(d).

The requirement for a fee for consideration of the petition to make special for applications pertaining to Green Technologies has been waived.

The instant petition complies with items 1 – 8 above. Accordingly, the above-identified application has been accorded "special" status.

Telephone inquires concerning this decision should be directed to Manjunath Rao at 571-272-0939.

The application is being forwarded to the Technology Center Art Unit 1652 for action on the merits commensurate with this decision.

/Manjunath Rao/

Manjunath Rao
Supervisory Patent Examiner &
POC for TC 1600 Green Tech Petitions
Technology Center 1600

UNITED STATES PATENT AND TRADEMARK OFFICE

Commissioner for Patents
United States Patent and Trademark Office
P.O. Box 1450
Alexandria, VA 22313-1450
www.uspto.gov

**Vista IP Law Group, LLP (GN Resound)**
**2160 Lundy Avenue**
**Suite 230**
**San Jose CA 95131**

| | |
|---|---|
| **In re Application of** | |
| **Naim SHEIKH** | **: REQUEST TO** |
| **Application No.: 12/981,412** | **: PARTICIPATE IN THE PATENT** |
| **Filed: 29 December 2010** | **: PROSECUTION HIGHWAY** |
| **Attorney Docket No.: GNR P1216 DK US** | **: PROGRAM AND PETITION** |
| **For: METHOD FOR THE DETECTION** | **: TO MAKE SPECIAL UNDER** |
| **OF WHISTLING IN AN AUDIO** | **: 37 CFR 1.102(a)** |
| **SYSTEM** | |

This is a decision on the request to participate in the Patent Prosecution Highway (PPH) program and the petition under 37 CFR 1.102(a), filed 12 October 2011, to make the above-identified application special.

The request and petition are **DISSMISSED**.

**Discussion**

A grantable request to participate in the PPH pilot program and petition to make special require:

1. The U.S. application is

    a. a Paris Convention application which either
        i. validly claims priority under 35 U.S.C. 119(a) and 37 CFR 1.55 to one or more applications filed in the DKPTO, or
        ii. validly claims priority to a PCT application that contains no priority claims, or
    b. a national stage application under the PCT (an application which entered the national stage in the U.S. from a PCT international application after compliance with 35 U.S.C. 371), which PCT application
        i. validly claims priority to an application filed in the DKPTO, or
        ii. validly claims priority to a PCT application that contains no priority claims, or
        iii. contains no priority claim, or
    c. a so-called bypass application filed under 35 U.S.C. 111(a) which validly claims benefit under 35 U.S.C. 120 to a PCT application, which PCT application
        i. validly claims priority to an application filed in the DKPTO, or
        ii. validly claims priority to a PCT application that contains no priority claims, or

iii. contains no priority claim;

2. Applicant must submit a copy of:
   a. The allowable/patentable claim(s) from the DKPTO application(s);
   b. An English translation of the allowable/patentable claim(s) and
   c. A statement that the English translation is accurate;
3. Applicant must:
   a. Ensure all the claims in the U.S. application must sufficiently correspond or be amended to sufficiently correspond to the allowable/patentable claim(s) in the DKPTO application(s) and
   b. Submit a claims correspondence table in English;
4. Examination of the U.S. application has <u>not</u> begun;
5. Applicant must submit:
   a. Documentation of prior office action:
      i. a copy of the office action(s) just prior to the "Decision to Grant a Patent" from each of the DKPTO application(s) containing the allowable/patentable claim(s) or
      ii. if the allowable/patentable claims(s) are from a "Notification of Reasons for Refusal" then the Notification of Reasons for Refusal or
      iii. if the DKPTO application is a first action allowance then no office action from the DKPTO is necessary should be indicated on the request/petition form;
   b. An English language translation of the DKPTO Office action from (5)(a)(i)-(ii) above
   c. A statement that the English translation is accurate;
6. Applicant must submit:
   a. An IDS listing the documents cited by the DKPTO examiner in the DKPTO office action (unless already submitted in this application)
   b. Copies of the documents except U.S. patents or U.S. patent application publications (unless already submitted in this application);

The request to participate in the PPH pilot program and petition comply with the requirements above.

Conditions (1-5) above are considered to have been met. However, the request to participate in the PPH pilot program and petition does not appear to meet condition (6).

Regarding the requirement of condition (6), applicant has failed submit copies of EP 1742509 and EP 0599450.

Applicant is given **<u>ONE</u>** opportunity within a time period of **ONE MONTH or THIRTY DAYS**, whichever is longer, from the mailing date of this decision to correct the deficiencies. **NO EXTENSION OF TIME UNDER 37 CFR 1.136 IS PERMITTED.** If the deficiencies are not corrected with the time period given, the application will await action in its regular turn.

Response must be filed via the Electronic Filing System (EFS) with Document Description: Petition to make special under Patent Pros Hwy. Any preliminary amendments and IDS submitted with the PPH documents must be separately indexed as a preliminary amendment and IDS, respectively.

Telephone inquiries concerning this decision should be directed to Lee W. Young at 571-272-4549.

All other inquiries concerning the examination or status of the application is accessible in the PAIR system at http://www.uspto.gov/ebc/index.html.

Lee W. Young
TQAS Technology Center 2600

UNITED STATES PATENT AND TRADEMARK OFFICE

Commissioner for Patents
United States Patent and Trademark Office
P.O. Box 1450
Alexandria, VA 22313-1450
www.uspto.gov

Vista IP Law Group, LLP (GN Resound)
2160 Lundy Avenue
Suite 230
San Jose, CA 95131

MAILED
JAN 17 2012
OFFICE OF PETITIONS

| | |
|---|---|
| In re Application of | : |
| Naim Sheikh | : REQUEST TO |
| Application No.: 12/981,412 | : PARTICIPATE IN THE PATENT |
| Filed: December 29, 2010 | : PROSECUTION HIGHWAY |
| Attorney Docket No.: GNR P1216 | : PROGRAM AND PETITION |
| For: METHOD FOR THE DETECTION OF | : TO MAKE SPECIAL UNDER |
| WHISTLING IN AN AUDIO SYSTEM | : 37 CFR 1.102(a) |

This is a decision on the request to participate in the Patent Prosecution Highway (PPH) program and the petition under 37 CFR 1.102(a), filed October 12, 2011 and renewed November 23, 2011, to make the above-identified application special.

The request and petition are **GRANTED**.

**Discussion**

A grantable request to participate in the PPH pilot program and petition to make special require:

1. The U.S. application is

    a. a Paris Convention application which either
        i. validly claims priority under 35 U.S.C. 119(a) and 37 CFR 1.55 to one or more applications filed in the DKPTO, or
        ii. validly claims priority to a PCT application that contains no priority claims, or
    b. a national stage application under the PCT (an application which entered the national stage in the U.S. from a PCT international application after compliance with 35 U.S.C. 371), which PCT application
        i. validly claims priority to an application filed in the DKPTO, or
        ii. validly claims priority to a PCT application that contains no priority claims, or
        iii. contains no priority claim, or
    c. a so-called bypass application filed under 35 U.S.C. 111(a) which validly claims benefit under 35 U.S.C. 120 to a PCT application, which PCT application
        i. validly claims priority to an application filed in the DKPTO, or

ii. validly claims priority to a PCT application that contains no priority claims, or
iii. contains no priority claim;

2. Applicant must submit a copy of:
   a. The allowable/patentable claim(s) from the DKPTO application(s);
   b. An English translation of the allowable/patentable claim(s) and
   c. A statement that the English translation is accurate;
3. Applicant must:
   a. Ensure all the claims in the U.S. application must sufficiently correspond or be amended to sufficiently correspond to the allowable/patentable claim(s) in the DKPTO application(s) and
   b. Submit a claims correspondence table in English;
4. Examination of the U.S. application has not begun;
5. Applicant must submit:
   a. Documentation of prior office action:
      i. a copy of the office action(s) just prior to the "Decision to Grant a Patent" from each of the DKPTO application(s) containing the allowable/patentable claim(s) or
      ii. if the allowable/patentable claims(s) are from a "Notification of Reasons for Refusal" then the Notification of Reasons for Refusal or
      iii. if the DKPTO application is a first action allowance then no office action from the DKPTO is necessary should be indicated on the request/petition form;
   b. An English language translation of the DKPTO Office action from (5)(a)(i)-(ii) above
   c. A statement that the English translation is accurate;
6. Applicant must submit:
   a. An IDS listing the documents cited by the DKPTO examiner in the DKPTO office action (unless already submitted in this application)
   b. Copies of the documents except U.S. patents or U.S. patent application publications (unless already submitted in this application);

The request to participate in the PPH pilot program and petition comply with the above requirements. Accordingly, the above-identified application has been accorded "special" status.

Inquiries concerning this decision should be directed to Andrea Smith at (571) 272-3226. All other inquiries concerning the examination or status of the application is accessible in the PAIR system at http://www.uspto.gov/ebc.index.html.

This application will be forwarded to the examiner for action on the merits commensurate with this decision.

/Andrea Smith/
Andrea Smith
Petitions Examiner
Office of Petitions

David Bucci
Petitions Examiner

**Doc Code: PET.GREEN**
**Document Description: Petition for Green Tech Pilot**

PTO/SB/420 (11-10)
Approved for use through 01/31/2011. OMB 0651-0062
U.S. Patent and Trademark Office; U. S. DEPARTMENT OF COMMERCE
Under the Paperwork Reduction Act of 1995, no persons are required to respond to a collection of information unless it displays a valid OMB control number.

# PETITION TO MAKE SPECIAL UNDER THE GREEN TECHNOLOGY PILOT PROGRAM

| | | |
|---|---|---|
| Attorney Docket Number: 22194-77966 | Application Number (if known): 12/981,417 | Filing date: December 29, 2010 |
| First Named Inventor: Chin-Yao Tsai | | |
| Title: THIN FILM SOLAR CELL AND MANUFACTURING METHOD THEREOF | | |

**APPLICANT HEREBY REQUESTS TO PARTICIPATE IN THE GREEN TECHNOLOGY PILOT PROGRAM FOR THE ABOVE-IDENTIFIED APPLICATION. See Instruction Sheet on page 2.**

This petition must be timely filed electronically using the USPTO electronic filing system, EFS-Web.

1. By filing this petition:

   **Applicant is requesting early publication: Applicant hereby requests early publication under 37 CFR 1.219 and the publication fee set forth in 37 CFR 1.18(d) accompanies this request.**

2. By filing this petition: applicant is agreeing to make an election without traverse in a telephonic interview and elect an invention that meets the eligibility requirements for the Green Technology Pilot Program, if the Office determines that the claims are not obviously directed to a single invention. See Instruction Sheet.

3. This request is accompanied by statements of special status for the eligibility requirement.

4. The application contains no more than three (3) independent claims and twenty (20) total claims.

5. The application does not contain any multiple dependent claims.

6. Other attachments: STATEMENT OF SPECIAL STATUS FOR THE ELIGIBILITY REQUIREMENT

| | |
|---|---|
| Signature /Tim Tingkang Xia/ | Date January 11, 2011 |
| Name (Print/Typed) Tim Tingkang Xia | Registration Number 45,242 |

***Note:*** *Signatures of all the inventors or assignees of record of the entire interest or their representative(s) are required in accordance with 37 CFR 1.33 and 11.18. Please see 37 CFR 1.4(d) for the form of the signature. If necessary, submit multiple forms for more than one signature see below*.*

☐ *Total of ..... forms are submitted.

The information is required to obtain or retain a benefit by the public which is to file (and by the USPTO to process) an application. Confidentiality is governed by 35 U.S.C. 122 and 37 CFR 1.11 and 1.14. This collection is estimated to take 12 hours to complete, including gathering, preparing, and submitting the completed application form to the USPTO. Time will vary depending upon the individual case. Any comments on the amount of time you require to complete this form and/or suggestions for reducing this burden, should be sent to the Chief Information Officer, U.S. Patent and Trademark Office, U.S. Department of Commerce, P.O. Box 1450, Alexandria, VA 22313-1450. DO NOT SEND FEES OR COMPLETED FORMS TO THIS ADDRESS. **SEND TO: Commissioner for Patents, P.O. Box 1450, Alexandria, VA 22313-1450.**

*If you need assistance in completing the form, call 1-800-PTO-9199 and select option 2.*

S/N **12/981,417**

PATENT
Confirmation No.: **6516**

**IN THE UNITED STATES PATENT AND TRADEMARK OFFICE**

| | | | |
|---|---|---|---|
| Applicant: | Chin-Yao Tsai | Examiner: | Unassigned |
| Serial No.: | **12/981,417** | Group Art Unit: | 1725 |
| Filed: | December 29, 2010 | Docket No.: | 22194-77966 |
| Title: | THIN FILM SOLAR CELL AND MANUFACTURING METHOD THEREOF | | |

---

**STATEMENT OF SPECIAL STATUS FOR THE ELIGIBILITY REQUIREMENT**

Mail Stop: Petition
Commissioner of Patents
P.O. Box 1450
Alexandria, Virginia 22313-1450

January 11, 2011

**CUSTOMER NO. 24728**

Dear Sir/Madam:

This Statement of Special Status for the Eligibility Requirement is filed pursuant to the requirements listed in PTO/SB/420, filed herewith, and pursuant to the requirements of 74 Fed. Reg. 64,666 (Dec. 8, 2009), as amended by 75 Fed. Reg. 28,554 (May 21, 2010), and 75 Fed. Reg. 69,049 (November 10, 2010).

A basis for the special status is that aspects of the invention relate to ***thin film solar cells*** that ***materially contribute to the discovery or development of renewable energy resources***. Applicant respectfully submits that it is clear on the above-referenced application's face that the claimed invention materially contributes to ***the discovery or development of renewable energy resources***, so no statement is required explaining how the materiality standard is met.

The above-referenced application is a non-reissue, non-provisional utility application filed December 29, 2010 under 35 U.S.C. § 111(a). The application contains no more than three (3) independent claims and twenty (20) total claims. The application does not contain any multiple dependent claims. Further, applicant respectfully submits that the claims of the application are directed to a single invention of a solar cell and manufacturing method thereof. However, if the USPTO determines that the claims are directed to multiple inventions (e.g., in a

restriction requirement), applicant agrees to make an election without traverse in a telephonic interview, and elect an invention that meets the eligibility requirements.

A first Office action (including an Office action containing only a restriction requirement) has not yet appeared in the Patent Application Information Retrieval (PAIR) system.

A request for early publication of the present application in compliance with 37 CFR 1.219 and the publication fee set forth in 37 CFR 1.18(d) are concurrently accompanied herewith this petition.

It is believed that no fee is due. However, the Commissioner is hereby authorized to charge any petition fee under 37 CFR 1.102, and any deficiency of fees which may be required, or to credit of any overpayments to Deposit Account No. 50-3537.

The Applicant respectfully requests that a favorable decision on this Petition to Make Special Under the Green Technology Pilot Program be granted and the application be accorded special status under the Green Technology Pilot Program.

Respectfully submitted,

MORRIS, MANNING & MARTIN, LLP

January 11, 2011

Tim Tingkang Xia
Attorney for Applicant on the Record
Reg. No. 45,242

MORRIS, MANNING & MARTIN, LLP
1600 Atlanta Financial Center
3343 Peachtree Road, N.E.
Atlanta, Georgia 30326-1044
Phone: 404-233-7000
Direct: 404-495-3678
Customer No. 24728

UNITED STATES PATENT AND TRADEMARK OFFICE

UNITED STATES DEPARTMENT OF COMMERCE
United States Patent and Trademark Office
Address: COMMISSIONER FOR PATENTS
P.O. Box 1450
Alexandria, Virginia 22313-1450
www.uspto.gov

| APPLICATION NO. | FILING DATE | FIRST NAMED INVENTOR | ATTORNEY DOCKET NO. | CONFIRMATION NO. |
|---|---|---|---|---|
| 12/981,417 | 12/29/2010 | Chin-Yao Tsai | 22194-77966 | 6516 |

24728 7590 02/07/2011
MORRIS MANNING MARTIN LLP
3343 PEACHTREE ROAD, NE
1600 ATLANTA FINANCIAL CENTER
ATLANTA, GA 30326

| EXAMINER |
|---|

| ART UNIT | PAPER NUMBER |
|---|---|
| 1725 | |

| NOTIFICATION DATE | DELIVERY MODE |
|---|---|
| 02/07/2011 | ELECTRONIC |

**Please find below and/or attached an Office communication concerning this application or proceeding.**

The time period for reply, if any, is set in the attached communication.

Notice of the Office communication was sent electronically on above-indicated "Notification Date" to the following e-mail address(es):

jxs@mmmlaw.com
ipdocket@mmmlaw.com
ppz@mmmlaw.com

UNITED STATES PATENT AND TRADEMARK OFFICE

Commissioner for Patents
United States Patent and Trademark Office
P.O. Box 1450
Alexandria, VA 22313-1450
www.uspto.gov

2/7/2011

MORRIS MANNING MARTIN LLP
3343 PEACHTREE ROAD, NE
1600 ATLANTA FINANCIAL CENTER
ATLANTA GA 30326

| | | |
|---|---|---|
| In re Application of | : | |
| Chin-Yao Tsai | : | DECISION ON PETITION |
| Application No. 12/981,417 | : | TO MAKE SPECIAL UNDER |
| Filed: December 29, 2010 | : | THE GREEN TECHNOLOGY |
| Attorney Docket No. 22194-77966 | : | PILOT PROGRAM |

This is a decision on the petition under 37 CFR 1.102, filed January 11, 2011, to make the above-identified application special under the pilot program for applications pertaining to Green Technologies as set forth in 74 Federal Register Notice 64666 (December 8, 2009) and amended by 75 Federal Register Notice 28554 (May 21, 2010) and 75 Federal Register Notice 69049 (November 10, 2010).

The petition is **GRANTED**.

A grantable petition to make an application special under 37 CFR 1.102 and the pilot program as set forth in 74 FR 64666 must be directed to a nonprovisional application filed under 35 USC 111(a) or be a national stage entry under 35 USC 371, exclusive of any reissue applications.

In order to qualify for special status, the following requirements must be met. 1) The application must have no more than 3 independent claims and no more than 20 total claims. 2) The application must not contain any multiple dependent claims. 3) The petition must state the basis for seeking special status, i.e., the claimed invention either: A) materially enhances the quality of the environment or B) materially contributes to: i) the discovery or development of renewable energy resources, ii) the more efficient utilization and conservation of energy resources, or iii) greenhouse gas emission reduction. 4) If the disclosure is not clear on its face that the claimed invention materially contributes under category (A) or (B), the petition must be accompanied by a statement by the applicant, assignee, or an attorney/agent registered to practice before the Office explaining how the materiality standard is met. 5) A statement that applicant will agree to make an election without traverse in a telephonic interview if a restriction requirement is made by the examiner. 6) The petition to make special must be filed electronically. 7) The petition must be filed at least one day prior to the date that a first Office Action appears in the Patent Application Information Retrieval (PAIR) system. 8) The petition must be accompanied by a request for early publication in compliance with 37 CFR 1.219 and include the publication fee as set forth in 37 CFR 1.18(d).

The requirement for a fee for consideration of the petition to make special for applications pertaining to Green Technologies has been waived.

The instant petition complies with items 1 – 8 above. Accordingly, the above-identified application has been accorded "special" status.

Telephone inquires concerning this decision should be directed to Blaine Copenheaver at 571-272-1156.

The application is being forwarded to the examiner for action on the merits commensurate with this decision.

/Blaine Copenheaver/

Blaine Copenheaver
Quality Assurance Specialist
Technology Center 1700

UNITED STATES PATENT AND TRADEMARK OFFICE

Commissioner for Patents
United States Patent and Trademark Office
P.O. Box 1450
Alexandria, VA 22313-1450
www.uspto.gov

**NAVAL RESEARCH LABORATORY**
**ASSOCIATE COUNSEL (PATENTS)**
**CODE 1008.2**
**4555 OVERLOOK AVENUE, S.W.**
**WASHINGTON DC 20375-5320**

MAILED

JAN 18 2011

OFFICE OF PETITIONS

| | | |
|---|---|---|
| In re Application of | : | |
| Carolyn R. Kaplan et al. | : | |
| Application No. 12/981,432 | : | DECISION ON PETITION |
| Filed: December 29, 2010 | : | TO MAKE SPECIAL UNDER |
| Attorney Docket No. **100148US2** | : | 37 CFR 1.102(c)(1) |
| | : | |

This is a decision on the petition under 37 CFR 1.102(c)(1), filed December 29, 2010, to make the above-identified application special based on applicant's age as set forth in MPEP § 708.02, Section IV.

The petition is **GRANTED**.

A grantable petition to make an application special under 37 CFR 1.102(c)(1) and MPEP § 708.02, Section IV: Applicant's Age must be accompanied by evidence showing that at least one of the applicants is 65 years of age, or more, such as a birth certificate or a statement by applicant. No fee is required

The instant petition includes a statement by a registered attorney. Accordingly, the above-identified application has been accorded "special" status.

Telephone inquiries concerning this decision should be directed to JoAnne Burke at 571-272-4584.

All other inquiries concerning either the examination or status of the application should be directed to the Technology Center.

The application is being forwarded to the Technology Center Art Unit 3661 for action on the merits commensurate with this decision.

/JoAnne Burke/
JoAnne Burke
Petitions Examiner
Office of Petitions

UNITED STATES PATENT AND TRADEMARK OFFICE

Commissioner for Patents
United States Patent and Trademark Office
P.O. Box 1450
Alexandria, VA 22313-1450
www.uspto.gov

**JIANQ CHYUN INTELLECTUAL PROPERTY OFFICE**
**7 FLOOR – 1, NO 100**
**ROOSEVELT ROAD, SECTION 2**
**TAIPEI 100 TW TAIWAN**

**MAILED**
MAR 29 2011
**OFFICE OF PETITIONS**

| | | |
|---|---|---|
| In re Application of | : | |
| Sen-Shyong Fann et al | : | DECISION GRANTING STATUS |
| Application No. 12/981,454 | : | UNDER 37 CFR 1.47(a) |
| Filed: December 29, 2010 | : | |
| Attorney Docket No. 32763-US-PA | : | |

This is in response to the petition under 37 CFR 1.47(a), filed December 29, 2010.

The petition is **GRANTED.**

Petitioner has shown that the non-signing inventor has refused to join in the filing of the above-identified application.

The application and papers have been reviewed and found in compliance with 37 CFR 1.47(a). This application is hereby accorded Rule 1.47(a) status.

As provided in 37 CFR 1.47(c), this Office will forward notice of this application's filing to the non-signing inventor at the address given in the petition. Notice of the filing of this application will also be published in the Official Gazette.

This application is being referred to the Office of Patent Application Processing for pre-examination processing.

Telephone inquiries regarding this decision should be directed to the undersigned at (571) 272-3208.

/KOC/
Karen Creasy
Petitions Examiner
Office of Petitions

UNITED STATES PATENT AND TRADEMARK OFFICE

Commissioner for Patents
United States Patent and Trademark Office
P.O. Box 1450
Alexandria, VA 22313-1450
www.uspto.gov

In re Application of
Totada R Shantha

Application No. 12981512

Filed:

Attorney Docket No. 0901108-021

:DECISION ON PETITION TO MAKE SPECIAL
:UNDER 37 CFR 1.102(c)(1)

This is a decision on the electronic petition under 37 CFR 1.102 (c)(1), filed 30-DEC-2010 to make the above-identified application special based on applicant's age as set forth in MPEP § 708.02, Section IV.

The petition is **GRANTED**.

A grantable petition to make an application special under 37 CFR 1.102(c)(1), MPEP § 708.02, Section IV: Applicant's Age must include a statement by applicant or a registered practitioner having evidence that applicant is at least 65 years of age. No fee is required.

Accordingly, the above-identified application has been accorded "special" status and will be taken up for action by the examiner upon the completion of all pre-examination processing.

Telephone inquiries concerning this electronic decision should be directed to the Electronic Business Center at 866-217-9197.

All other inquiries concerning either the examination or status of the application should be directed to the Technology Center.

**Doc Code: PET.GREEN**
**Document Description: Petition for Green Tech Pilot**

PTO/SB/420 (11-10)
Approved for use through 01/31/2011. OMB 0651-0062
U.S. Patent and Trademark Office; U. S. DEPARTMENT OF COMMERCE
Under the Paperwork Reduction Act of 1995, no persons are required to respond to a collection of information unless it displays a valid OMB control number.

# PETITION TO MAKE SPECIAL UNDER THE GREEN TECHNOLOGY PILOT PROGRAM

| | | |
|---|---|---|
| Attorney Docket Number: 83163718 | Application Number (if known): 12981596 | Filing date: 2010-12-30 |
| First Named Inventor: Alireza Pezhman Shirvanian | | |
| Title: THIN FILM CATALYST ON POROUS MEDIA AND ELECTROCHEMICAL CALL EMPLOYING THE SAME | | |

**APPLICANT HEREBY REQUESTS TO PARTICIPATE IN THE GREEN TECHNOLOGY PILOT PROGRAM FOR THE ABOVE-IDENTIFIED APPLICATION. See Instruction Sheet on page 2.**

This petition must be timely filed electronically using the USPTO electronic filing system, EFS-Web.

1. By filing this petition:

   **Applicant is requesting early publication: Applicant hereby requests early publication under 37 CFR 1.219 and the publication fee set forth in 37 CFR 1.18(d) accompanies this request.**

2. By filing this petition: applicant is agreeing to make an election without traverse in a telephonic interview and elect an invention that meets the eligibility requirements for the Green Technology Pilot Program, if the Office determines that the claims are not obviously directed to a single invention. See Instruction Sheet.

3. This request is accompanied by statements of special status for the eligibility requirement.

4. The application contains no more than three (3) independent claims and twenty (20) total claims.

5. The application does not contain any multiple dependent claims.

6. Other attachments: Status Statement for Petition to Make Special

| | |
|---|---|
| Signature /Junqi Hang/ | Date 2011-03-04 |
| Name (Print/Typed) Junqi Hang | Registration Number 54,615 |

***Note:*** *Signatures of all the inventors or assignees of record of the entire interest or their representative(s) are required in accordance with 37 CFR 1.33 and 11.18. Please see 37 CFR 1.4(d) for the form of the signature. If necessary, submit multiple forms for more than one signature see below*.*

☒ *Total of 1 forms are submitted.

The information is required to obtain or retain a benefit by the public which is to file (and by the USPTO to process) an application. Confidentiality is governed by 35 U.S.C. 122 and 37 CFR 1.11 and 1.14. This collection is estimated to take 12 hours to complete, including gathering, preparing, and submitting the completed application form to the USPTO. Time will vary depending upon the individual case. Any comments on the amount of time you require to complete this form and/or suggestions for reducing this burden, should be sent to the Chief Information Officer, U.S. Patent and Trademark Office, U.S. Department of Commerce, P.O. Box 1450, Alexandria, VA 22313-1450. DO NOT SEND FEES OR COMPLETED FORMS TO THIS ADDRESS. **SEND TO: Commissioner for Patents, P.O. Box 1450, Alexandria, VA 22313-1450.**

*If you need assistance in completing the form, call 1-800-PTO-9199 and select option 2.*

Under the Paperwork Reduction Act of 1995, no persons are required to respond to a collection of information unless it displays a valid OMB control number.

# Instruction Sheet for Petition to Make Special Under the Green Technology Pilot Program

(Not to be Submitted to the USPTO)

**The following is a summary of the requirements (for more information see the notices (i) "Pilot Program for Green Technologies Including Greenhouse Gas Reduction," (ii) "Elimination of Classification Requirement in the Green Technology Pilot Program," and (iii) "Expansion and Extension of the Green Technology Pilot Program," available on the USPTO web site at http://www.uspto.gov/patents/init_events/green_tech.jsp):**

1) The application must be a non-reissue, non-provisional utility application filed under 35 U.S.C. 111 (a), or an international application that has entered the national stage in compliance with 35 U.S.C. 371, irrespective of the filing date of the application. Reexamination proceedings are excluded from this pilot program.

2) The application must contain three or fewer independent claims and twenty or fewer total claims. The application must not contain any multiple dependent claims. For an application that contains more than three independent claims or twenty total claims, or multiple dependent claims, applicant must file a preliminary amendment in compliance with 37 CFR 1.121 to cancel the excess claims and/or the multiple dependent claims at the time the petition to make special is filed.

3) The claims must be directed to a single invention that materially enhances the quality of the environment, or that materially contributes to: (1) the discovery or development of renewable energy resources; (2) the more efficient utilization and conservation of energy resources; or (3) green house gas emission reduction (see the eligibility requirements of sections II and III of the notice (i) cited above). The petition must include a statement that, if the USPTO determines that the claims are directed to multiple inventions (e.g., in a restriction requirement), applicant will agree to make an election without traverse in a telephonic interview, and elect an invention that meets the eligibility requirements in section II or III of the notice (i) cited above.

4) The petition to make special must be timely filed electronically using the USPTO electronic filing system, EFS-Web, and selecting the document description of "Petition for Green Tech Pilot" on the EFS-Web screen. Applicant should use form PTO/SB/420, which is available as a Portable Document Format (PDF) fillable form in EFS-Web and on the USPTO Web site.

5) The petition to make special must be filed at least one day prior to the date that a first Office action (which may be an Office action containing only a restriction requirement) appears in the Patent Application Information Retrieval (PAIR) system. Applicant may check the status of the application using PAIR.

6) The petition to make special must be accompanied by a request for early publication in compliance with 37 CFR 1.219 and the publication fee set forth in 37 CFR 1.18(d).

## Privacy Act Statement

The **Privacy Act of 1974 (P.L. 93-579)** requires that you be given certain information in connection with your submission of the attached form related to a patent application or patent. Accordingly, pursuant to the requirements of the Act, please be advised that: (1) the general authority for the collection of this information is 35 U.S.C. 2(b)(2); (2) furnishing of the information solicited is voluntary; and (3) the principal purpose for which the information is used by the U.S. Patent and Trademark Office is to process and/or examine your submission related to a patent application or patent. If you do not furnish the requested information, the U.S. Patent and Trademark Office may not be able to process and/or examine your submission, which may result in termination of proceedings or abandonment of the application or expiration of the patent.

The information provided by you in this form will be subject to the following routine uses:

1. The information on this form will be treated confidentially to the extent allowed under the Freedom of Information Act (5 U.S.C. 552) and the Privacy Act (5 U.S.C 552a). Records from this system of records may be disclosed to the Department of Justice to determine whether disclosure of these records is required by the Freedom of Information Act.
2. A record from this system of records may be disclosed, as a routine use, in the course of presenting evidence to a court, magistrate, or administrative tribunal, including disclosures to opposing counsel in the course of settlement negotiations.
3. A record in this system of records may be disclosed, as a routine use, to a Member of Congress submitting a request involving an individual, to whom the record pertains, when the individual has requested assistance from the Member with respect to the subject matter of the record.
4. A record in this system of records may be disclosed, as a routine use, to a contractor of the Agency having need for the information in order to perform a contract. Recipients of information shall be required to comply with the requirements of the Privacy Act of 1974, as amended, pursuant to 5 U.S.C. 552a(m).
5. A record related to an International Application filed under the Patent Cooperation Treaty in this system of records may be disclosed, as a routine use, to the International Bureau of the World Intellectual Property Organization, pursuant to the Patent Cooperation Treaty.
6. A record in this system of records may be disclosed, as a routine use, to another federal agency for purposes of National Security review (35 U.S.C. 181) and for review pursuant to the Atomic Energy Act (42 U.S.C. 218(c)).
7. A record from this system of records may be disclosed, as a routine use, to the Administrator, General Services, or his/her designee, during an inspection of records conducted by GSA as part of that agency's responsibility to recommend improvements in records management practices and programs, under authority of 44 U.S.C. 2904 and 2906. Such disclosure shall be made in accordance with the GSA regulations governing inspection of records for this purpose, and any other relevant (*i.e.*, GSA or Commerce) directive. Such disclosure shall not be used to make determinations about individuals.
8. A record from this system of records may be disclosed, as a routine use, to the public after either publication of the application pursuant to 35 U.S.C. 122(b) or issuance of a patent pursuant to 35 U.S.C. 151. Further, a record may be disclosed, subject to the limitations of 37 CFR 1.14, as a routine use, to the public if the record was filed in an application which became abandoned or in which the proceedings were terminated and which application is referenced by either a published application, an application open to public inspection or an issued patent.
9. A record from this system of records may be disclosed, as a routine use, to a Federal, State, or local law enforcement agency, if the USPTO becomes aware of a violation or potential violation of law or regulation.

UNITED STATES PATENT AND TRADEMARK OFFICE

UNITED STATES DEPARTMENT OF COMMERCE
United States Patent and Trademark Office
Address: COMMISSIONER FOR PATENTS
P.O. Box 1450
Alexandria, Virginia 22313-1450
www.uspto.gov

| APPLICATION NO. | FILING DATE | FIRST NAMED INVENTOR | ATTORNEY DOCKET NO. | CONFIRMATION NO. |
|---|---|---|---|---|
| 12/981,596 | 12/30/2010 | Alireza Pezhman Shirvanian | 83163718 | 6788 |

28395 7590 03/16/2011
BROOKS KUSHMAN P.C./FGTL
1000 TOWN CENTER
22ND FLOOR
SOUTHFIELD, MI 48075-1238

| EXAMINER |
|---|

| ART UNIT | PAPER NUMBER |
|---|---|
| 1724 | |

| MAIL DATE | DELIVERY MODE |
|---|---|
| 03/16/2011 | PAPER |

**Please find below and/or attached an Office communication concerning this application or proceeding.**

The time period for reply, if any, is set in the attached communication.

UNITED STATES PATENT AND TRADEMARK OFFICE

Commissioner for Patents
United States Patent and Trademark Office
P.O. Box 1450
Alexandria, VA 22313-1450
www.uspto.gov

3/16/2011

BROOKS KUSHMAN P.C./FGTL
1000 TOWN CENTER
22ND FLOOR
SOUTHFIELD MI 48075-1238

| | | |
|---|---|---|
| In re Application of | : | |
| Shirvanian | : | DECISION ON PETITION |
| Application No. 12/981,596 | : | TO MAKE SPECIAL UNDER |
| Filed: 12/30/2010 | : | THE GREEN TECHNOLOGY |
| Attorney Docket No. **83163718** | : | PILOT PROGRAM |

This is a decision on the petition under 37 CFR 1.102, filed 3/4/2011, to make the above-identified application special under the pilot program for applications pertaining to Green Technologies as set forth in 74 Federal Register Notice 64666 (December 8, 2009) and amended by 75 Federal Register Notice 28554 (May 21, 2010) and 75 Federal Register Notice 69049 (November 10, 2010).

The petition is **GRANTED**.

A grantable petition to make an application special under 37 CFR 1.102 and the pilot program as set forth in 74 FR 64666 must be directed to a nonprovisional application filed under 35 USC 111(a) or be a national stage entry under 35 USC 371, exclusive of any reissue applications.

In order to qualify for special status, the following requirements must be met. 1) The application must have no more than 3 independent claims and no more than 20 total claims. 2) The application must not contain any multiple dependent claims. 3) The petition must state the basis for seeking special status, i.e., the claimed invention either: A) materially enhances the quality of the environment or B) materially contributes to: i) the discovery or development of renewable energy resources, ii) the more efficient utilization and conservation of energy resources, or iii) greenhouse gas emission reduction. 4) If the disclosure is not clear on its face that the claimed invention materially contributes under category (A) or (B), the petition must be accompanied by a statement by the applicant, assignee, or an attorney/agent registered to practice before the Office explaining how the materiality standard is met. 5) A statement that applicant will agree to make an election without traverse in a telephonic interview if a restriction requirement is made by the examiner. 6) The petition to make special must be filed electronically. 7) The petition must be filed at least one day prior to the date that a first Office Action appears in the Patent Application Information Retrieval (PAIR) system. 8) The petition must be accompanied by a

request for early publication in compliance with 37 CFR 1.219 and include the publication fee as set forth in 37 CFR 1.18(d).

The requirement for a fee for consideration of the petition to make special for applications pertaining to Green Technologies has been waived.

The instant petition complies with items 1 – 8 above. Accordingly, the above-identified application has been accorded "special" status.

Telephone inquires concerning this decision should be directed to Tom Dunn at 571-272-1171.

The application is being forwarded to the Technology Center Art Unit 1724 for action on the merits commensurate with this decision.

/Tom Dunn/

Tom Dunn
Quality Assurance Specialist
Technology Center 1700

**Doc Code: PET.GREEN**
**Document Description: Petition for Green Tech Pilot**

PTO/SB/420 (11-10)
Approved for use through 01/31/2011. OMB 0651-0062
U.S. Patent and Trademark Office; U. S. DEPARTMENT OF COMMERCE
Under the Paperwork Reduction Act of 1995, no persons are required to respond to a collection of information unless it displays a valid OMB control number.

# PETITION TO MAKE SPECIAL UNDER THE GREEN TECHNOLOGY PILOT PROGRAM

| | | |
|---|---|---|
| Attorney Docket Number: 83163741 | Application Number (if known): 12981605 | Filing date: 2010-12-30 |
| First Named Inventor: Yun Yang | | |
| Title: HYDROGEN STORAGE MATERIALS | | |

**APPLICANT HEREBY REQUESTS TO PARTICIPATE IN THE GREEN TECHNOLOGY PILOT PROGRAM FOR THE ABOVE-IDENTIFIED APPLICATION. See Instruction Sheet on page 2.**

This petition must be timely filed electronically using the USPTO electronic filing system, EFS-Web.

1. By filing this petition:

   **Applicant is requesting early publication: Applicant hereby requests early publication under 37 CFR 1.219 and the publication fee set forth in 37 CFR 1.18(d) accompanies this request.**

2. By filing this petition: applicant is agreeing to make an election without traverse in a telephonic interview and elect an invention that meets the eligibility requirements for the Green Technology Pilot Program, if the Office determines that the claims are not obviously directed to a single invention. See Instruction Sheet.

3. This request is accompanied by statements of special status for the eligibility requirement.

4. The application contains no more than three (3) independent claims and twenty (20) total claims.

5. The application does not contain any multiple dependent claims.

6. Other attachments: Status Statement for Petition to Make Special

| | |
|---|---|
| Signature /Junqi Hang/ | Date 2011-03-04 |
| Name (Print/Typed) Junqi Hang | Registration Number 54,615 |

***Note:*** *Signatures of all the inventors or assignees of record of the entire interest or their representative(s) are required in accordance with 37 CFR 1.33 and 11.18. Please see 37 CFR 1.4(d) for the form of the signature. If necessary, submit multiple forms for more than one signature see below*.*

☒ *Total of 1 forms are submitted.

The information is required to obtain or retain a benefit by the public which is to file (and by the USPTO to process) an application. Confidentiality is governed by 35 U.S.C. 122 and 37 CFR 1.11 and 1.14. This collection is estimated to take 12 hours to complete, including gathering, preparing, and submitting the completed application form to the USPTO. Time will vary depending upon the individual case. Any comments on the amount of time you require to complete this form and/or suggestions for reducing this burden, should be sent to the Chief Information Officer, U.S. Patent and Trademark Office, U.S. Department of Commerce, P.O. Box 1450, Alexandria, VA 22313-1450. DO NOT SEND FEES OR COMPLETED FORMS TO THIS ADDRESS. **SEND TO: Commissioner for Patents, P.O. Box 1450, Alexandria, VA 22313-1450.**

*If you need assistance in completing the form, call 1-800-PTO-9199 and select option 2.*

Under the Paperwork Reduction Act of 1995, no persons are required to respond to a collection of information unless it displays a valid OMB control number.

# Instruction Sheet for Petition to Make Special Under the Green Technology Pilot Program

(Not to be Submitted to the USPTO)

**The following is a summary of the requirements (for more information see the notices (i) "Pilot Program for Green Technologies Including Greenhouse Gas Reduction," (ii) "Elimination of Classification Requirement in the Green Technology Pilot Program," and (iii) "Expansion and Extension of the Green Technology Pilot Program," available on the USPTO web site at http://www.uspto.gov/patents/init_events/green_tech.jsp):**

1) The application must be a non-reissue, non-provisional utility application filed under 35 U.S.C. 111 (a), or an international application that has entered the national stage in compliance with 35 U.S.C. 371, irrespective of the filing date of the application. Reexamination proceedings are excluded from this pilot program.

2) The application must contain three or fewer independent claims and twenty or fewer total claims. The application must not contain any multiple dependent claims. For an application that contains more than three independent claims or twenty total claims, or multiple dependent claims, applicant must file a preliminary amendment in compliance with 37 CFR 1.121 to cancel the excess claims and/or the multiple dependent claims at the time the petition to make special is filed.

3) The claims must be directed to a single invention that materially enhances the quality of the environment, or that materially contributes to: (1) the discovery or development of renewable energy resources; (2) the more efficient utilization and conservation of energy resources; or (3) green house gas emission reduction (see the eligibility requirements of sections II and III of the notice (i) cited above). The petition must include a statement that, if the USPTO determines that the claims are directed to multiple inventions (e.g., in a restriction requirement), applicant will agree to make an election without traverse in a telephonic interview, and elect an invention that meets the eligibility requirements in section II or III of the notice (i) cited above.

4) The petition to make special must be timely filed electronically using the USPTO electronic filing system, EFS-Web, and selecting the document description of "Petition for Green Tech Pilot" on the EFS-Web screen. Applicant should use form PTO/SB/420, which is available as a Portable Document Format (PDF) fillable form in EFS-Web and on the USPTO Web site.

5) The petition to make special must be filed at least one day prior to the date that a first Office action (which may be an Office action containing only a restriction requirement) appears in the Patent Application Information Retrieval (PAIR) system. Applicant may check the status of the application using PAIR.

6) The petition to make special must be accompanied by a request for early publication in compliance with 37 CFR 1.219 and the publication fee set forth in 37 CFR 1.18(d).

## Privacy Act Statement

The **Privacy Act of 1974 (P.L. 93-579)** requires that you be given certain information in connection with your submission of the attached form related to a patent application or patent. Accordingly, pursuant to the requirements of the Act, please be advised that: (1) the general authority for the collection of this information is 35 U.S.C. 2(b)(2); (2) furnishing of the information solicited is voluntary; and (3) the principal purpose for which the information is used by the U.S. Patent and Trademark Office is to process and/or examine your submission related to a patent application or patent. If you do not furnish the requested information, the U.S. Patent and Trademark Office may not be able to process and/or examine your submission, which may result in termination of proceedings or abandonment of the application or expiration of the patent.

The information provided by you in this form will be subject to the following routine uses:

1. The information on this form will be treated confidentially to the extent allowed under the Freedom of Information Act (5 U.S.C. 552) and the Privacy Act (5 U.S.C 552a). Records from this system of records may be disclosed to the Department of Justice to determine whether disclosure of these records is required by the Freedom of Information Act.
2. A record from this system of records may be disclosed, as a routine use, in the course of presenting evidence to a court, magistrate, or administrative tribunal, including disclosures to opposing counsel in the course of settlement negotiations.
3. A record in this system of records may be disclosed, as a routine use, to a Member of Congress submitting a request involving an individual, to whom the record pertains, when the individual has requested assistance from the Member with respect to the subject matter of the record.
4. A record in this system of records may be disclosed, as a routine use, to a contractor of the Agency having need for the information in order to perform a contract. Recipients of information shall be required to comply with the requirements of the Privacy Act of 1974, as amended, pursuant to 5 U.S.C. 552a(m).
5. A record related to an International Application filed under the Patent Cooperation Treaty in this system of records may be disclosed, as a routine use, to the International Bureau of the World Intellectual Property Organization, pursuant to the Patent Cooperation Treaty.
6. A record in this system of records may be disclosed, as a routine use, to another federal agency for purposes of National Security review (35 U.S.C. 181) and for review pursuant to the Atomic Energy Act (42 U.S.C. 218(c)).
7. A record from this system of records may be disclosed, as a routine use, to the Administrator, General Services, or his/her designee, during an inspection of records conducted by GSA as part of that agency's responsibility to recommend improvements in records management practices and programs, under authority of 44 U.S.C. 2904 and 2906. Such disclosure shall be made in accordance with the GSA regulations governing inspection of records for this purpose, and any other relevant (*i.e.*, GSA or Commerce) directive. Such disclosure shall not be used to make determinations about individuals.
8. A record from this system of records may be disclosed, as a routine use, to the public after either publication of the application pursuant to 35 U.S.C. 122(b) or issuance of a patent pursuant to 35 U.S.C. 151. Further, a record may be disclosed, subject to the limitations of 37 CFR 1.14, as a routine use, to the public if the record was filed in an application which became abandoned or in which the proceedings were terminated and which application is referenced by either a published application, an application open to public inspection or an issued patent.
9. A record from this system of records may be disclosed, as a routine use, to a Federal, State, or local law enforcement agency, if the USPTO becomes aware of a violation or potential violation of law or regulation.

UNITED STATES PATENT AND TRADEMARK OFFICE

UNITED STATES DEPARTMENT OF COMMERCE
United States Patent and Trademark Office
Address: COMMISSIONER FOR PATENTS
P.O. Box 1450
Alexandria, Virginia 22313-1450
www.uspto.gov

| APPLICATION NO. | FILING DATE | FIRST NAMED INVENTOR | ATTORNEY DOCKET NO. | CONFIRMATION NO. |
|---|---|---|---|---|
| 12/981,605 | 12/30/2010 | Jun Yang | 83163741 | 6807 |

28395 7590 03/28/2011
BROOKS KUSHMAN P.C./FGTL
1000 TOWN CENTER
22ND FLOOR
SOUTHFIELD, MI 48075-1238

| EXAMINER |
|---|
| IQBAL, SYED TAHA |

| ART UNIT | PAPER NUMBER |
|---|---|
| 1736 | |

| MAIL DATE | DELIVERY MODE |
|---|---|
| 03/28/2011 | PAPER |

**Please find below and/or attached an Office communication concerning this application or proceeding.**

The time period for reply, if any, is set in the attached communication.

UNITED STATES PATENT AND TRADEMARK OFFICE

Commissioner for Patents
United States Patent and Trademark Office
P.O. Box 1450
Alexandria, VA 22313-1450
www.uspto.gov

BROOKS KUSHMAN P.C./FGTL
1000 TOWN CENTER
22ND FLOOR
SOUTHFIELD MI 48075-1238

3/28/2011

| | | |
|---|---|---|
| In re Application of | : | |
| Yang et al. | : | DECISION ON PETITION |
| Application No. 12/981,605 | : | TO MAKE SPECIAL UNDER |
| Filed: 12/30/2010 | : | THE GREEN TECHNOLOGY |
| Attorney Docket No. **83163741** | : | PILOT PROGRAM |

This is a decision on the petition under 37 CFR 1.102, filed 3/4/2011, to make the above-identified application special under the pilot program for applications pertaining to Green Technologies as set forth in 74 Federal Register Notice 64666 (December 8, 2009) and amended by 75 Federal Register Notice 28554 (May 21, 2010) and 75 Federal Register Notice 69049 (November 10, 2010).

The petition is **GRANTED**.

A grantable petition to make an application special under 37 CFR 1.102 and the pilot program as set forth in 74 FR 64666 must be directed to a nonprovisional application filed under 35 USC 111(a) or be a national stage entry under 35 USC 371, exclusive of any reissue applications.

In order to qualify for special status, the following requirements must be met. 1) The application must have no more than 3 independent claims and no more than 20 total claims. 2) The application must not contain any multiple dependent claims. 3) The petition must state the basis for seeking special status, i.e., the claimed invention either: A) materially enhances the quality of the environment or B) materially contributes to: i) the discovery or development of renewable energy resources, ii) the more efficient utilization and conservation of energy resources, or iii) greenhouse gas emission reduction. 4) If the disclosure is not clear on its face that the claimed invention materially contributes under category (A) or (B), the petition must be accompanied by a statement by the applicant, assignee, or an attorney/agent registered to practice before the Office explaining how the materiality standard is met. 5) A statement that applicant will agree to make an election without traverse in a telephonic interview if a restriction requirement is made by the examiner. 6) The petition to make special must be filed electronically. 7) The petition must be filed at least one day prior to the date that a first Office Action appears in the Patent Application Information Retrieval (PAIR) system. 8) The petition must be accompanied by a

request for early publication in compliance with 37 CFR 1.219 and include the publication fee as set forth in 37 CFR 1.18(d).

The requirement for a fee for consideration of the petition to make special for applications pertaining to Green Technologies has been waived.

The instant petition complies with items 1 – 8 above. Accordingly, the above-identified application has been accorded "special" status.

Telephone inquires concerning this decision should be directed to Tom Dunn at 571-272-1171.

The application is being forwarded to the Technology Center Art Unit 1736 for action on the merits commensurate with this decision.

/Tom Dunn/

Tom Dunn
Quality Assurance Specialist
Technology Center 1700

**IN THE UNITED STATES PATENT AND TRADEMARK OFFICE**

| | |
|---|---|
| **First Named Inventor: James Henry MADGE** | ) |
| **Confirmation No.: 6901** | ) |
| | ) |
| **Serial No.: 12/981,652** | ) |
| | ) |
| **Filing Date: 12-30-2010** | ) |
| | ) |
| **Atty Docket No.: 245473-1** | ) |

Commissioner for Patents
P.O. Box 1450
Alexandria, VA 22313-1450

**Statement Concerning the Basis for the Special Status**

SIR:

Applicant respectfully submits that Special Status is sought on the basis that the present invention materially contributes to the development of renewable energy resources or energy conservation.

The undersigned attorney may be contacted at the number below to facilitate the resolution of any matters. Please charge any fees that are incurred in connection with this Statement to deposit account no. 09-0470.

Respectfully submitted,

General Electric Company

By : /Douglas D. Zhang/
Douglas D. Zhang
Reg. No. 37,985

Dated: May 13, 2011

GE Global Patent Operation
2 Corporate Drive, Suite 648
Shelton, CT 06484
203-944-6755

Doc Code: PET.GREEN
Document Description: Petition for Green Tech Pilot

PTO/SB/420 (03-11)

# PETITION TO MAKE SPECIAL UNDER THE GREEN TECHNOLOGY PILOT PROGRAM

| Attorney Docket Number: 245473-1 | Application Number (if known): 12/981,652 | Filing date: 12-30-2010 |
|---|---|---|

First Named Inventor: James Henry MADGE

Title: DRIVETRAIN FOR GENERATOR IN WIND TURBINE

**APPLICANT HEREBY REQUESTS TO PARTICIPATE IN THE GREEN TECHNOLOGY PILOT PROGRAM FOR THE ABOVE-IDENTIFIED APPLICATION. See Instruction Sheet on page 2.**

This petition must be timely filed electronically using the USPTO electronic filing system, EFS-Web.

1. By filing this petition:

   **Applicant is requesting early publication: Applicant hereby requests early publication under 37 CFR 1.219 and the publication fee set forth in 37 CFR 1.18(d) accompanies this request.**

2. By filing this petition: applicant is agreeing to make an election without traverse in a telephonic interview and elect an invention that meets the eligibility requirements for the Green Technology Pilot Program, if the Office determines that the claims are not obviously directed to a single invention. See Instruction Sheet.

3. This request is accompanied by statements of special status for the eligibility requirement.

4. The application contains no more than three (3) independent claims and twenty (20) total claims.

5. The application does not contain any multiple dependent claims.

6. Other attachments: Statement Concerning the Basis for the Special Status

| Signature /Douglas D. Zhang/ | Date May 13, 2011 |
|---|---|
| Name (Print/Typed) Douglas D. Zhang | Registration Number 37,985 |

***Note:*** *Signatures of all the inventors or assignees of record of the entire interest or their representative(s) are required in accordance with 37 CFR 1.33 and 11.18. Please see 37 CFR 1.4(d) for the form of the signature. If necessary, submit multiple forms for more than one signature, see below*.*

☐ *Total of _____ forms are submitted.

*If you need assistance in completing the form, call 1-800-PTO-9199 and select option 2.*

# Privacy Act Statement

The **Privacy Act of 1974 (P.L. 93-579)** requires that you be given certain information in connection with your submission of the attached form related to a patent application or patent. Accordingly, pursuant to the requirements of the Act, please be advised that: (1) the general authority for the collection of this information is 35 U.S.C. 2(b)(2); (2) furnishing of the information solicited is voluntary; and (3) the principal purpose for which the information is used by the U.S. Patent and Trademark Office is to process and/or examine your submission related to a patent application or patent. If you do not furnish the requested information, the U.S. Patent and Trademark Office may not be able to process and/or examine your submission, which may result in termination of proceedings or abandonment of the application or expiration of the patent.

The information provided by you in this form will be subject to the following routine uses:

1. The information on this form will be treated confidentially to the extent allowed under the Freedom of Information Act (5 U.S.C. 552) and the Privacy Act (5 U.S.C 552a). Records from this system of records may be disclosed to the Department of Justice to determine whether disclosure of these records is required by the Freedom of Information Act.
2. A record from this system of records may be disclosed, as a routine use, in the course of presenting evidence to a court, magistrate, or administrative tribunal, including disclosures to opposing counsel in the course of settlement negotiations.
3. A record in this system of records may be disclosed, as a routine use, to a Member of Congress submitting a request involving an individual, to whom the record pertains, when the individual has requested assistance from the Member with respect to the subject matter of the record.
4. A record in this system of records may be disclosed, as a routine use, to a contractor of the Agency having need for the information in order to perform a contract. Recipients of information shall be required to comply with the requirements of the Privacy Act of 1974, as amended, pursuant to 5 U.S.C. 552a(m).
5. A record related to an International Application filed under the Patent Cooperation Treaty in this system of records may be disclosed, as a routine use, to the International Bureau of the World Intellectual Property Organization, pursuant to the Patent Cooperation Treaty.
6. A record in this system of records may be disclosed, as a routine use, to another federal agency for purposes of National Security review (35 U.S.C. 181) and for review pursuant to the Atomic Energy Act (42 U.S.C. 218(c)).
7. A record from this system of records may be disclosed, as a routine use, to the Administrator, General Services, or his/her designee, during an inspection of records conducted by GSA as part of that agency's responsibility to recommend improvements in records management practices and programs, under authority of 44 U.S.C. 2904 and 2906. Such disclosure shall be made in accordance with the GSA regulations governing inspection of records for this purpose, and any other relevant (*i.e.*, GSA or Commerce) directive. Such disclosure shall not be used to make determinations about individuals.
8. A record from this system of records may be disclosed, as a routine use, to the public after either publication of the application pursuant to 35 U.S.C. 122(b) or issuance of a patent pursuant to 35 U.S.C. 151. Further, a record may be disclosed, subject to the limitations of 37 CFR 1.14, as a routine use, to the public if the record was filed in an application which became abandoned or in which the proceedings were terminated and which application is referenced by either a published application, an application open to public inspection or an issued patent.
9. A record from this system of records may be disclosed, as a routine use, to a Federal, State, or local law enforcement agency, if the USPTO becomes aware of a violation or potential violation of law or regulation.

UNITED STATES PATENT AND TRADEMARK OFFICE

UNITED STATES DEPARTMENT OF COMMERCE
United States Patent and Trademark Office
Address: COMMISSIONER FOR PATENTS
P.O. Box 1450
Alexandria, Virginia 22313-1450
www.uspto.gov

| APPLICATION NO. | FILING DATE | FIRST NAMED INVENTOR | ATTORNEY DOCKET NO. | CONFIRMATION NO. |
|---|---|---|---|---|
| 12/981,652 | 12/30/2010 | James Henry Madge | 245473-1 | 6901 |

7788 7590 06/17/2011
GE ENERGY GENERAL ELECTRIC
C/O ERNEST G. CUSICK
ONE RIVER ROAD, BLD. 43, ROOM 225
SCHENECTADY, NY 12345

| EXAMINER |
|---|

| ART UNIT | PAPER NUMBER |
|---|---|
| 3745 | |

| MAIL DATE | DELIVERY MODE |
|---|---|
| 06/17/2011 | PAPER |

**Please find below and/or attached an Office communication concerning this application or proceeding.**

The time period for reply, if any, is set in the attached communication.

UNITED STATES PATENT AND TRADEMARK OFFICE

Commissioner for Patents
United States Patent and Trademark Office
P.O. Box 1450
Alexandria, VA 22313-1450
www.uspto.gov

GE ENERGY GENERAL ELECTRIC
C/O ERNEST G. CUSICK
ONE RIVER ROAD, BLD. 43, ROOM 225
SCHENECTADY NY 12345

| | | |
|---|---|---|
| In re Application of | : | |
| MADGE, JAMES HENRY | : | DECISION ON PETITION |
| Application No. 12/981652 | : | TO MAKE SPECIAL UNDER |
| Filed: December 30, 2010 | : | THE GREEN TECHNOLOGY |
| Attorney Docket No. 245473-1 | : | PILOT PROGRAM |

This is a decision on the petition under 37 CFR 1.102, filed May 18, 2011, to make the above-identified application special under the pilot program for applications pertaining to Green Technologies as set forth in 74 Federal Register Notice 64666 (December 8, 2009) and amended by 75 Federal Register Notice 28554 (May 21, 2010) and 75 Federal Register Notice 69049 (November 10, 2010).

The petition is **granted**.

A grantable petition to make an application special under 37 CFR 1.102 and the pilot program as set forth in 74 FR 64666 must be directed to a nonprovisional application filed under 35 USC 111(a) or be a national stage entry under 35 USC 371, exclusive of any reissue applications.

If reconsideration of this decision is desired, a petition for reconsideration must be filed within ONE (1) MONTH OR THIRTY (30) DAYS from the mail date of this decision, whichever is longer. No extension of this time limit can be granted under 37 CFR 1.136(a) or (b). The petition for reconsideration should include an exhaustive attempt to provide the lacking item(s) noted below, since, after a decision on the petition for reconsideration, no further reconsideration or review of the matter will be undertaken by the Director.

In order to qualify for special status, the following requirements must be met. 1) The application must have no more than 3 independent claims and no more than 20 total claims. 2) The application must not contain any multiple dependent claims. 3) The petition must state the basis for seeking special status, i.e., the claimed invention either: A) materially enhances the quality of the environment or B) materially contributes to: i) the discovery or development of renewable energy resources, ii) the more efficient utilization and conservation of energy resources, or iii)

greenhouse gas emission reduction. 4) If the disclosure is not clear on its face that the claimed invention materially contributes under category (A) or (B), the petition must be accompanied by a statement by the applicant, assignee, or an attorney/agent registered to practice before the Office explaining how the materiality standard is met. 5) A statement that applicant will agree to make an election without traverse in a telephonic interview if a restriction requirement is made by the examiner. 6) The petition to make special must be filed electronically. 7) The petition must be filed at least one day prior to the date that a first Office Action appears in the Patent Application Information Retrieval (PAIR) system. 8) The petition must be accompanied by a request for early publication in compliance with 37 CFR 1.219 and include the publication fee as set forth in 37 CFR 1.18(d).

The requirement for a fee for consideration of the petition to make special for applications pertaining to Green Technologies has been waived.

The instant petition complies with items 1 – 8 above. Accordingly, the above-identified application has been accorded "special" status.

Telephone inquires concerning this decision should be directed to Henry C. Yuen at 571-272-4856.

This application will be forwarded to the Technology Center Art Unit 3745 for action on the merits commensurate with this decision.

/Henry C. Yuen/

Henry C. Yuen
Quality Assurance Specialist
Technology Center TC 3700

UNITED STATES PATENT AND TRADEMARK OFFICE

Commissioner for Patents
United States Patent and Trademark Office
P.O. Box 1450
Alexandria, VA 22313-1450
www.uspto.gov

Paper No.

One LLP
4000 MacArthur Blvd., Suite 1100
Newport Beach CA 92660

MAILED
SEP 30 2011
OFFICE OF PETITIONS

| | | |
|---|---|---|
| In re Application of | : | |
| David Melamed | : | DECISION ON PETITION |
| Application No. 12/981,757 | : | |
| Filed: December 30, 2010 | : | |
| Atty Docket No. **200,413-3CON** | : | |

This is a decision on the PETITION TO REVIVE APPLICATION UNDER 37 CFR 1.137(b) filed September 27, 2011.

The petition is **GRANTED**.

The above-identified application became abandoned for failure to file a reply to the NOTICE TO FILE CORRECTED APPLICATION PAPERS mailed January 21, 2011. This Notice set a two-month time limit for reply, with extensions of time obtainable under § 1.136(a). No reply considered timely filed and no extension of time considered obtained, the application became abandoned effective March 22, 2011. A reply was filed on September 12, 2011, but this was beyond the maximum extendable period for reply. A courtesy Notice of Abandonment was mailed on September 26, 2011.

The petition includes the required reply in the form of replacement drawings, the statement of unintentional delay and payment of the petition fee. No terminal disclaimer is required.

An extension of time under 37 CFR 1.136 must be filed prior to the expiration of the maximum extendable period for reply. See In re Application of S., 8 USPQ2d 1630, 1631 (Comm'r Pats. 1988). Since the $1,175 extension of time fee was submitted

subsequent to the maximum extendable period for reply, this fee is unnecessary and is being refunded.

The application is being forwarded to the Office of Patent Application Processing for completion of pre-examination processing, including processing of the response filed on September 12, 2011.

Telephone inquiries specific to this matter should be directed to the undersigned at (571) 272-3219.

Nancy Johnson
Senior Petitions Attorney
Office of Petitions

UNITED STATES PATENT AND TRADEMARK OFFICE

Commissioner for Patents
United States Patent and Trademark Office
P.O. Box 1450
Alexandria, VA 22313-1450
www.uspto.gov

**WENDEROTH, LIND & PONACK, L.L.P.**
**1030 15TH STREET, N.W.,**
**SUITE 400 EAST**
**WASHINGTON DC 20005-1503**

MAILED

FEB 15 2011

OFFICE OF PETITIONS

| | | |
|---|---|---|
| In re Application of | : | |
| PEYMAN | : | |
| Application No. 12/981,819 | : | DECISION ON PETITION |
| Filed: December 30, 2010 | : | TO MAKE SPECIAL UNDER |
| Attorney Docket No. 2010_1665 | : | 37 CFR 1.102(c)(1) |
| | : | |

This is a decision on the petition under 37 CFR 1.102(c)(1), filed December 30, 2010, to make the above-identified application special based on applicant's age as set forth in M.P.E.P. § 708.02, Section IV.

The petition is **GRANTED**.

A grantable petition to make an application special under 37 CFR 1.102(c)(1) and MPEP § 708.02, Section IV: Applicant's Age must be accompanied by evidence showing that at least one of the applicants is 65 years of age, or more, such as a birth certificate or a statement by applicant. No fee is required

The instant petition includes a statement by applicant. Accordingly, the above-identified application has been accorded "special" status.

Telephone inquiries concerning this decision should be directed to the undersigned at (571) 272-6735.

All other inquiries concerning either the examination or status of the application should be directed to the Technology Center at (571) 272-2800.

The application is being forwarded to Technology Center Art Unit 2873 for action on the merits commensurate with this decision.

/Diane C. Goodwyn/
Diane C. Goodwyn
Petitions Examiner
Office of Petitions

**Doc Code: PET.GREEN**
**Document Description: Petition for Green Tech Pilot**

PTO/SB/420 (03-11)

## PETITION TO MAKE SPECIAL UNDER THE GREEN TECHNOLOGY PILOT PROGRAM

| Attorney Docket Number: DP-319164 | Application Number (if known): 12/981,881 | Filing date: December 30, 2010 |
|---|---|---|

First Named Inventor: Anthony J. DeRose et al.

Title: A SOLID OXIDE FUEL CELL HAVING A GLASS COMPOSITE SEAL

**APPLICANT HEREBY REQUESTS TO PARTICIPATE IN THE GREEN TECHNOLOGY PILOT PROGRAM FOR THE ABOVE-IDENTIFIED APPLICATION. See Instruction Sheet on page 2.**

This petition must be timely filed electronically using the USPTO electronic filing system, EFS-Web.

1. By filing this petition:

   **Applicant is requesting early publication: Applicant hereby requests early publication under 37 CFR 1.219 and the publication fee set forth in 37 CFR 1.18(d) accompanies this request.**

2. By filing this petition: applicant is agreeing to make an election without traverse in a telephonic interview and elect an invention that meets the eligibility requirements for the Green Technology Pilot Program, if the Office determines that the claims are not obviously directed to a single invention. See Instruction Sheet.

3. This request is accompanied by statements of special status for the eligibility requirement.

4. The application contains no more than three (3) independent claims and twenty (20) total claims.

5. The application does not contain any multiple dependent claims.

6. Other attachments: Statement Accompanying Petition to Make Special Under Green-Technology Pilot Program

| Signature /Patrick M. Griffin/ | Date July 13, 2011 |
|---|---|
| Name (Print/Typed) Patrick M. Griffin | Registration Number 29716 |

***Note:*** *Signatures of all the inventors or assignees of record of the entire interest or their representative(s) are required in accordance with 37 CFR 1.33 and 11.18. Please see 37 CFR 1.4(d) for the form of the signature. If necessary, submit multiple forms for more than one signature, see below*.*

☒ *Total of 2 forms are submitted.

*If you need assistance in completing the form, call 1-800-PTO-9199 and select option 2.*

# Instruction Sheet for
# Petition to Make Special Under the Green Technology Pilot Program

(Not to be Submitted to the USPTO)

***The following is a summary of the requirements (for more information see the notices (i) "Pilot Program for Green Technologies Including Greenhouse Gas Reduction," (ii) "Elimination of Classification Requirement in the Green Technology Pilot Program," and (iii) "Expansion and Extension of the Green Technology Pilot Program," available on the USPTO web site at http://www.uspto.gov/patents/init_events/green_tech.jsp):***

(1) The application must be a non-reissue, non-provisional utility application filed under 35 U.S.C. 111(a), or an international application that has entered the national stage in compliance with 35 U.S.C. 371, irrespective of the filing date of the application. Reexamination proceedings are excluded from this pilot program.

(2) The application must contain three or fewer independent claims and twenty or fewer total claims. The application must not contain any multiple dependent claims. For an application that contains more than three independent claims or twenty total claims, or multiple dependent claims, applicant must file a preliminary amendment in compliance with 37 CFR 1.121 to cancel the excess claims and/or the multiple dependent claims at the time the petition to make special is filed.

(3) The claims must be directed to a single invention that materially enhances the quality of the environment, or that materially contributes to: (1) the discovery or development of renewable energy resources; (2) the more efficient utilization and conservation of energy resources; or (3) green house gas emission reduction (see the eligibility requirements of sections II and III of the notice (i) cited above). The petition must include a statement that, if the USPTO determines that the claims are directed to multiple inventions (e.g., in a restriction requirement), applicant will agree to make an election without traverse in a telephonic interview, and elect an invention that meets the eligibility requirements in section II or III of the notice (i) cited above.

(4) The petition to make special must be timely filed electronically using the USPTO electronic filing system, EFS-Web, and selecting the document description of "Petition for Green Tech Pilot" on the EFS-Web screen. Applicant should use form PTO/SB/420, which is available as a Portable Document Format (PDF) fillable form in EFS-Web and on the USPTO Web site.

(5) The petition to make special must be filed at least one day prior to the date that a first Office action (which may be an Office action containing only a restriction requirement) appears in the Patent Application Information Retrieval (PAIR) system. Applicant may check the status of the application using PAIR.

(6) The petition to make special must be accompanied by a request for early publication in compliance with 37 CFR 1.219 and the publication fee set forth in 37 CFR 1.18(d).

# Privacy Act Statement

The **Privacy Act of 1974 (P.L. 93-579)** requires that you be given certain information in connection with your submission of the attached form related to a patent application or patent. Accordingly, pursuant to the requirements of the Act, please be advised that: (1) the general authority for the collection of this information is 35 U.S.C. 2(b)(2); (2) furnishing of the information solicited is voluntary; and (3) the principal purpose for which the information is used by the U.S. Patent and Trademark Office is to process and/or examine your submission related to a patent application or patent. If you do not furnish the requested information, the U.S. Patent and Trademark Office may not be able to process and/or examine your submission, which may result in termination of proceedings or abandonment of the application or expiration of the patent.

The information provided by you in this form will be subject to the following routine uses:

1. The information on this form will be treated confidentially to the extent allowed under the Freedom of Information Act (5 U.S.C. 552) and the Privacy Act (5 U.S.C 552a). Records from this system of records may be disclosed to the Department of Justice to determine whether disclosure of these records is required by the Freedom of Information Act.
2. A record from this system of records may be disclosed, as a routine use, in the course of presenting evidence to a court, magistrate, or administrative tribunal, including disclosures to opposing counsel in the course of settlement negotiations.
3. A record in this system of records may be disclosed, as a routine use, to a Member of Congress submitting a request involving an individual, to whom the record pertains, when the individual has requested assistance from the Member with respect to the subject matter of the record.
4. A record in this system of records may be disclosed, as a routine use, to a contractor of the Agency having need for the information in order to perform a contract. Recipients of information shall be required to comply with the requirements of the Privacy Act of 1974, as amended, pursuant to 5 U.S.C. 552a(m).
5. A record related to an International Application filed under the Patent Cooperation Treaty in this system of records may be disclosed, as a routine use, to the International Bureau of the World Intellectual Property Organization, pursuant to the Patent Cooperation Treaty.
6. A record in this system of records may be disclosed, as a routine use, to another federal agency for purposes of National Security review (35 U.S.C. 181) and for review pursuant to the Atomic Energy Act (42 U.S.C. 218(c)).
7. A record from this system of records may be disclosed, as a routine use, to the Administrator, General Services, or his/her designee, during an inspection of records conducted by GSA as part of that agency's responsibility to recommend improvements in records management practices and programs, under authority of 44 U.S.C. 2904 and 2906. Such disclosure shall be made in accordance with the GSA regulations governing inspection of records for this purpose, and any other relevant (*i.e.*, GSA or Commerce) directive. Such disclosure shall not be used to make determinations about individuals.
8. A record from this system of records may be disclosed, as a routine use, to the public after either publication of the application pursuant to 35 U.S.C. 122(b) or issuance of a patent pursuant to 35 U.S.C. 151. Further, a record may be disclosed, subject to the limitations of 37 CFR 1.14, as a routine use, to the public if the record was filed in an application which became abandoned or in which the proceedings were terminated and which application is referenced by either a published application, an application open to public inspection or an issued patent.
9. A record from this system of records may be disclosed, as a routine use, to a Federal, State, or local law enforcement agency, if the USPTO becomes aware of a violation or potential violation of law or regulation.

UNITED STATES PATENT AND TRADEMARK OFFICE

UNITED STATES DEPARTMENT OF COMMERCE
United States Patent and Trademark Office
Address: COMMISSIONER FOR PATENTS
P.O. Box 1450
Alexandria, Virginia 22313-1450
www.uspto.gov

| APPLICATION NO. | FILING DATE | FIRST NAMED INVENTOR | ATTORNEY DOCKET NO. | CONFIRMATION NO. |
|---|---|---|---|---|
| 12/981,881 | 12/30/2010 | ANTHONY J. DE ROSE | DP-319164 | 7345 |

22851 7590 08/22/2011
Delphi Technologies, Inc.
M/C 480-410-202
P.O. Box 5052
Troy, MI 48007

| EXAMINER |
|---|
| SCULLY, STEVEN M |

| ART UNIT | PAPER NUMBER |
|---|---|
| 1727 | |

| MAIL DATE | DELIVERY MODE |
|---|---|
| 08/22/2011 | PAPER |

**Please find below and/or attached an Office communication concerning this application or proceeding.**

The time period for reply, if any, is set in the attached communication.

UNITED STATES PATENT AND TRADEMARK OFFICE

Commissioner for Patents
United States Patent and Trademark Office
P.O. Box 1450
Alexandria, VA 22313-1450
www.uspto.gov

Delphi Technologies, Inc.
M/C 480-410-202
P.O. Box 5052
Troy MI 48007

AUG 22 2011

| | | |
|---|---|---|
| In re Application of | : | |
| Anthony J. DeRose | : | DECISION ON PETITION |
| Application No. 12/981,881 | : | TO MAKE SPECIAL UNDER |
| Filed: December 30, 2010 | : | THE GREEN TECHNOLOGY |
| Attorney Docket No. DP-319164 | : | PILOT PROGRAM |

This is a decision on the petition under 37 CFR 1.102, filed July 13, 2011, to make the above-identified application special under the pilot program for applications pertaining to Green Technologies as set forth in 74 Federal Register Notice 64666 (December 8, 2009) and amended by 75 Federal Register Notice 28554 (May 21, 2010) and 75 Federal Register Notice 69049 (November 10, 2010).

The petition is **GRANTED**.

A grantable petition to make an application special under 37 CFR 1.102 and the pilot program as set forth in 74 FR 64666 must be directed to a nonprovisional application filed under 35 USC 111(a) or be a national stage entry under 35 USC 371, exclusive of any reissue applications.

In order to qualify for special status, the following requirements must be met. 1) The application must have no more than 3 independent claims and no more than 20 total claims. 2) The application must not contain any multiple dependent claims. 3) The petition must state the basis for seeking special status, i.e., the claimed invention either: A) materially enhances the quality of the environment or B) materially contributes to: i) the discovery or development of renewable energy resources, ii) the more efficient utilization and conservation of energy resources, or iii) greenhouse gas emission reduction. 4) If the disclosure is not clear on its face that the claimed invention materially contributes under category (A) or (B), the petition must be accompanied by a statement by the applicant, assignee, or an attorney/agent registered to practice before the Office explaining how the materiality standard is met. 5) A statement that applicant will agree to make an election without traverse in a telephonic interview if a restriction requirement is made by the examiner. 6) The petition to make special must be filed electronically. 7) The petition must be filed at least one day prior to the date that a first Office Action appears in the Patent Application Information Retrieval (PAIR) system. 8) The petition must be accompanied by a request for early publication in compliance with 37 CFR 1.219 and include the publication fee as set forth in 37 CFR 1.18(d).

The requirement for a fee for consideration of the petition to make special for applications pertaining to Green Technologies has been waived.

The instant petition complies with items 1 – 8 above. Accordingly, the above-identified application has been accorded "special" status.

Telephone inquires concerning this decision should be directed to Blaine Copenheaver at 571-272-1156.

The application is being forwarded to the examiner for action on the merits commensurate with this decision.

/Blaine Copenheaver/

Blaine Copenheaver
Quality Assurance Specialist
Technology Center 1700

UNITED STATES PATENT AND TRADEMARK OFFICE

Commissioner for Patents
United States Patent and Trademark Office
P.O. Box 1450
Alexandria, VA 22313-1450
www.uspto.gov

**KAGAN BINDER, PLLC**
**221 MAIN STREET NORTH**
**SUITE 200**
**STILLWATER MN 55082**

MAILED
NOV 17 2011
OFFICE OF PETITIONS

Applicants: Kurdyumov, et al.
Appl. No.: 12/981,885
Filing Date: December 30, 2010
Title: SILYL ETHER-MODIFIED HYDROPHILIC POLYMERS AND USES FOR MEDICAL ARTICLES
Attorney Docket: SRM0134/US
Pub. No.: US 20110159101 A1
Pub. Date: June 30, 2011

This is a decision on the request for a corrected patent application publication under 37 CFR 1.221(b), received on August 23, 2011, for the above-identified application.

The request is granted.

The corrected patent application publication will be published in due course, unless the patent issues before the application is republished.

Inquiries relating to this matter may be directed to Karen Creasy at (571) 272-3208.

/Christopher Bottorff/

Christopher Bottorff
Petitions Examiner
Office of Petitions

PTO/SB/20PCT-JP (05-10)
Approved for use through 01/31/2012. OMB 0651-0058
U.S. Patent and Trademark Office; U.S. DEPARTMENT OF COMMERCE
Under the Paperwork Reduction Act of 1995, no persons are required to respond to a collection of information unless it contains a valid OMB control number.

# REQUEST FOR PARTICIPATION IN THE PATENT COOPERATION TREATY – PATENT PROSECUTION HIGHWAY (PCT-PPH) PILOT PROGRAM BETWEEN THE JAPAN PATENT OFFICE (JPO) AND THE USPTO

| | | | |
|---|---|---|---|
| Application No.: | 12/981,939 | Filing Date: | December 30, 2010 |
| First Named Inventor: | Shinsuke FUJIWARA | | |
| Title of the Invention: | GaN SUBSTRATE AND LIGHT-EMITTING DEVICE | | |

**THIS REQUEST FOR PARTICIPATION IN THE PCT-PPH PILOT PROGRAM ALONG WITH THE REQUIRED DOCUMENTS MUST BE SUBMITTED VIA EFS-WEB. INFORMATION REGARDING EFS-WEB IS AVAILABLE AT HTTP://WWW.USPTO.GOV/EBC/EFS_HELP.HTML**

**APPLICANT HEREBY REQUESTS PARTICIPATION IN THE PCT-PPH PROGRAM AND PETITIONS TO MAKE THE ABOVE-IDENTIFIED APPLICATION SPECIAL UNDER THE PCT-PPH PROGRAM.**

The above-identified application is (1) a national stage entry of the corresponding PCT application, or (2) a national stage entry of another PCT application which claims priority to the corresponding PCT application, or (3) a national application that claims domestic/foreign priority to the corresponding PCT application, or (4) a national application which forms the basis for the priority claim in the corresponding PCT application, or (5) a continuing application of a U.S. application that satisfies one of (1) to (4) above, or (6) a U.S. application that claims domestic benefit to a U.S. provisional application which forms the basis for the priority claim in the corresponding PCT application.

**The corresponding PCT application number(s) is/are:** PCT/JP2010/069910

**The international date of the corresponding PCT application(s) is/are:** November 9, 2010

**I. List of Required Documents:**

a. **A copy of the latest international work product (WO/ISA, WO/IPEA, or IPER) in the above-identified corresponding PCT application(s)**

[X] Is attached.

[ ] Is not attached because the document is already in the U.S. application.

b. **A copy of all claims which were indicated as having novelty, inventive step and industrial applicability in the above-identified corresponding PCT application(s).**

[X] Is attached.

[ ] Is not attached because the document is already in the U.S. application.

c. **English translations of the documents in a. and b. above are attached (if the documents are not in the English language). A statement that the English translation is accurate is attached for the document in b. above.**

d. **(1) An information disclosure statement listing the documents cited in the international work products (ISR, WO/ISA, WO/IPEA, IPER) of the corresponding PCT application.**

[ ] Is attached.

[X] Has already been filed in the above-identified U.S. application on April 4, 2011

**(2) Copies of all documents (except) for U.S. patents or U.S. patent application publications)**

[ ] Are attached.

[X] Have already been filed in the above-identified U.S. application on April 4, 2011

Under the Paperwork Reduction Act of 1995, no persons are required to respond to a collection of information unless it contains a valid OMB control number.

## REQUEST FOR PARTICIPATION IN THE PCT-PPH PILOT PROGRAM BETWEEN THE JPO AND THE USPTO
(continued)

| | |
|---|---|
| Application No.: | 12/981,939 |
| First Named Inventor: | Shinsuke FUJIWARA |

**II. Claims Correspondence Table:**

| Claims in US Application | Patentable Claims in the corresponding PCT Application | Explanation regarding the correspondence |
|---|---|---|
| 1<br>2<br>3<br>4 | 1<br>2<br>3<br>4 | U.S. claims 1-4 sufficiently correspond as being substantially identical to respective PCT claims 1-4. |

**III. All the claims in the US application sufficiently correspond to the patentable claims in the corresponding PCT application.**

| | |
|---|---|
| Signature Paul A. Fournier | Date December 13, 2011 |
| Name (Print/Typed) Paul A. Fournier | Registration Number 41,023 |

UNITED STATES PATENT AND TRADEMARK OFFICE

Commissioner for Patents
United States Patent and Trademark Office
P.O. Box 1450
Alexandria, VA 22313-1450
www.uspto.gov

**DRINKER BIDDLE & REATH (DC)**
**1500 K STREET, N.W.**
**SUITE 1100**
**WASHINGTON DC 20005-1209**

MAILED
JAN 25 2012
OFFICE OF PETITIONS

**In re Application of**
**Shinsuke Fujiwara, et al.**
**Application No.: 12/981,939**
**Filed: 30 December 2010**
**Attorney Docket No.: 201917-0037**
**(462891)**
**For: GAN SUBSTRATE AND LIGHT-EMITTING DEVICE**

**: DECISION ON REQUEST TO**
**: PARTICIPATE IN THE PATENT**
**: PROSECUTION HIGHWAY**
**: PROGRAM AND PETITION**
**: TO MAKE SPECIAL UNDER**
**: 37 CFR 1.102(a)**

This is a decision on the request to participate in the PCT Patent Prosecution Highway (PCT-PPH) pilot program and the petition under 37 CFR 1.102(a), filed on 13 December 2011, to make the above-identified application special.

The request and petition are **GRANTED**.

## DISCUSSION

A grantable request to participate in the PCT-PPH pilot program and petition to make special require:

(1) The U.S. application must have an eligible relationship to one or more PCT applications where the ISA or IPEA are the JPO, EPO, KIPO, NPI, NBPR, or USPTO;

(2) At least one claim in the PCT application has novelty, inventive step, and industrial applicability and must be free of any observations in Box VIII in the latest work product in the international stage or applicant must identify and explain why the claim(s) is/are not subject to the observation in Box VIII;

(3) Applicant must submit a copy of the claim(s) from the PCT application(s) that have novelty, inventive step, and industrial applicability along with an English translation thereof and a

statement that the English translation is accurate, if the claims are not in the English language;

(4) All the claims in the U.S. application must sufficiently correspond or be amended to sufficiently correspond to the claim(s) that have novelty, inventive step, and industrial applicability in the PCT application(s);

(5) Examination of the U.S. application has not begun;

(6) Applicant must submit a copy of the latest international work product from the PCT application indicating that the claim(s) have novelty, inventive step, and industrial applicability along with an English translation thereof and a statement that the English translation is accurate if the latest international work product is not in the English language;

(7) Applicant must submit an IDS listing the documents cited by the PCT examiner in the international work product along with copies of documents except U.S. patents or U.S. patent application publications.

The request to participate in the PCT-PPH pilot program and petition comply with the above requirements. Accordingly, the above-identified application has been accorded "special" status.

Telephone inquiries concerning this decision should be directed to April M. Wise at (571) 272-1642.

All other inquiries concerning the examination or status of the application is accessible in the PAIR system at http://www.uspto.gov/ebc.index.html.

This application will be forwarded to the examiner for action on the merits commensurate with this decision.

/dab/
David Bucci
Petitions Examiner
Office of Petitions

UNITED STATES PATENT AND TRADEMARK OFFICE

Commissioner for Patents
United States Patent and Trademark Office
P.O. Box 1450
Alexandria, VA 22313-1450
www.uspto.gov

INTEL CORPORATION
c/o CPA Global
P.O. BOX 52050
MINNEAPOLIS MN 55402

**MAILED**
JAN 24 2012
**OFFICE OF PETITIONS**

In re Application of
Gary Solomon et al.
Application No. 12/981,979
Filed: December 30, 2010
Attorney Docket No: **P26718C**

ON PETITION

This is a decision on the petition filed December 30, 2011 under 37 CFR 1.137(b),[1] to revive the above-identified application.

The petition is **GRANTED**.

This application became abandoned June 22, 2011 for failure to timely reply to the non-Final Office Action mailed March 21, 2011 within the shortened statutory period of three months set for reply. Accordingly, a Notice of Abandonment was mailed October 6, 2011.

This matter is being referred to Technology Center 2182 for appropriate action on the amendment filed December 30, 2011.

Telephone inquiries concerning this matter should be directed to the undersigned Petitions Attorney at (571) 272-3212.

Patricia Faison-Ball
Senior Petitions Attorney
Office of Petitions

---

[1]Effective December 1, 1997, the provisions of 37 CFR 1.137(b) now provide that where the delay in reply was unintentional, a petition may be filed to revive an abandoned application or a lapsed patent pursuant to 37 CFR 1.137(b). A grantable petition filed under the provisions of 37 CFR 1.137(b) must be accompanied by:

(1) the required reply, unless previously filed. In a nonprovisional application abandoned for failure to prosecute, the required reply may be met by the filing of a continuing application. In a nonprovisional application filed on or after June 8, 1995, and abandoned for failure to prosecute, the required reply may also be met by the filing of a request for continued examination in compliance with § 1.114. In an application or patent, abandoned or lapsed for failure to pay the issue fee or any portion thereof, the required reply must be the payment of the issue fee or any outstanding balance thereof. In an application abandoned for failure to pay the publication fee, the required reply must include payment of the publication fee.

(2) the petition fee as set forth in 37 CFR 1.17(m);

(3) a statement that the entire delay in filing the required reply from the due date for the reply until the filing of a grantable petition pursuant to 37 CFR 1.137(b) was unintentional. The Director may require additional information where there is a question whether the delay was unintentional; and

(4) any terminal disclaimer (and fee as set forth in 37 CFR 1.20(d)) required pursuant to 37 CFR 1.137(c)).

**Doc Code: PET.GREEN**
**Document Description: Petition for Green Tech Pilot**

PTO/SB/420 (05-10)
Approved for use through 01/31/2011. OMB 0651-0062
U.S. Patent and Trademark Office; U. S. DEPARTMENT OF COMMERCE
Under the Paperwork Reduction Act of 1995, no persons are required to respond to a collection of information unless it displays a valid OMB control number.

# PETITION TO MAKE SPECIAL UNDER THE GREEN TECHNOLOGY PILOT PROGRAM

| Attorney Docket Number: O2-0724 | Application Number (if known): 12982003 | Filing date: 12/30/2010 |
|---|---|---|

First Named Inventor: Guoxing LI

Title: Battery Management Systems for Protecting Batteries from Fault Conditions

**APPLICANT HEREBY REQUESTS TO PARTICIPATE IN THE GREEN TECHNOLOGY PILOT PROGRAM FOR THE ABOVE-IDENTIFIED APPLICATION. See Instruction Sheet on page 2.**

This petition must be timely filed electronically using the USPTO electronic filing system, EFS-Web.

1. By filing this petition:

   **Applicant is requesting early publication: Applicant hereby requests early publication under 37 CFR 1.219 and the publication fee set forth in 37 CFR 1.18(d) accompanies this request.**

2. By filing this petition: applicant is agreeing to make an election without traverse in a telephonic interview and elect an invention that meets the eligibility requirements set forth in the notice titled "Pilot Program for Green Technologies Including Greenhouse Gas Reduction," as modified by the notice titled "Elimination of Classification Requirement in the Green Technology Pilot Program," each of which was published in the Federal Register, if the Office determines that the claims are not obviously directed to a single invention.

3. This request is accompanied by statements of special status for the eligibility requirement.

4. The application contains no more than three (3) independent claims and twenty (20) total claims.

5. The application does not contain any multiple dependent claims.

6. Other attachments: _____

| Signature /William A. Zarbis/ | Date 12/30/2010 |
|---|---|
| Name (Print/Typed) William A. Zarbis | Registration Number 46120 |

***Note**: Signatures of all the inventors or assignees of record of the entire interest or their representative(s) are required in accordance with 37 CFR 1.33 and 11.18. Please see 37 CFR 1.4(d) for the form of the signature. If necessary, submit multiple forms for more than one signature, see below*.*

☐ *Total of _____ forms are submitted.

The information is required to obtain or retain a benefit by the public which is to file (and by the USPTO to process) an application. Confidentiality is governed by 35 U.S.C. 122 and 37 CFR 1.11 and 1.14. This collection is estimated to take 1 hour to complete, including gathering, preparing, and submitting the completed application form to the USPTO. Time will vary depending upon the individual case. Any comments on the amount of time you require to complete this form and/or suggestions for reducing this burden, should be sent to the Chief Information Officer, U.S. Patent and Trademark Office, U.S. Department of Commerce, P.O. Box 1450, Alexandria, VA 22313-1450. DO NOT SEND FEES OR COMPLETED FORMS TO THIS ADDRESS. **SEND TO: Commissioner for Patents, P.O. Box 1450, Alexandria, VA 22313-1450.**

*If you need assistance in completing the form, call 1-800-PTO-9199 and select option 2.*

Under the Paperwork Reduction Act of 1995, no persons are required to respond to a collection of information unless it displays a valid OMB control number.

# Instruction Sheet for Petition to Make Special Under the Green Technology Pilot Program

(Not to be Submitted to the USPTO)

***The following is a summary of the requirements (for more information see the notices (i) "Pilot Program for Green Technologies Including Greenhouse Gas Reduction" and (ii) "Elimination of Classification Requirement in the Green Technology Pilot Program," available on the USPTO web site at http://www.uspto.gov/patents/init_events/green_tech.jsp):***

(1) The application must be a non-reissue, non-provisional utility application filed under 35 U.S.C. 111(a), or an international application that has entered the national stage in compliance with 35 U.S.C. 371. The application must be previously filed before the publication date of the notice cited above. Reexamination proceedings are excluded from this pilot program.

(2) The application must contain three or fewer independent claims and twenty or fewer total claims. The application must not contain any multiple dependent claims. For an application that contains more than three independent claims or twenty total claims, or multiple dependent claims, applicant must file a preliminary amendment in compliance with 37 CFR 1.121 to cancel the excess claims and/or the multiple dependent claims at the time the petition to make special is filed.

(3) The claims must be directed to a single invention that materially enhances the quality of the environment, or that materially contributes to: (1) the discovery or development of renewable energy resources; (2) the more efficient utilization and conservation of energy resources; or (3) green house gas emission reduction (see the eligibility requirements of sections II and III of the notice (i) cited above). The petition must include a statement that, if the USPTO determines that the claims are directed to multiple inventions (e.g., in a restriction requirement), applicant will agree to make an election without traverse in a telephonic interview, and elect an invention that meets the eligibility requirements in section II or III of the notice (i) cited above.

(4) The petition to make special must be timely filed electronically using the USPTO electronic filing system, EFS-Web, and selecting the document description of "Petition for Green Tech Pilot" on the EFS-Web screen. Applicant should use form PTO/SB/420, which is available as a Portable Document Format (PDF) fillable form in EFS-Web and on the USPTO Web site.

(5) The petition to make special must be filed at least one day prior to the date that a first Office action (which may be an Office action containing only a restriction requirement) appears in the Patent Application Information Retrieval (PAIR) system. Applicant may check the status of the application using PAIR.

(6) The petition to make special must be accompanied by a request for early publication in compliance with 37 CFR 1.219 and the publication fee set forth in 37 CFR 1.18(d).

# Privacy Act Statement

The **Privacy Act of 1974 (P.L. 93-579)** requires that you be given certain information in connection with your submission of the attached form related to a patent application or patent. Accordingly, pursuant to the requirements of the Act, please be advised that: (1) the general authority for the collection of this information is 35 U.S.C. 2(b)(2); (2) furnishing of the information solicited is voluntary; and (3) the principal purpose for which the information is used by the U.S. Patent and Trademark Office is to process and/or examine your submission related to a patent application or patent. If you do not furnish the requested information, the U.S. Patent and Trademark Office may not be able to process and/or examine your submission, which may result in termination of proceedings or abandonment of the application or expiration of the patent.

The information provided by you in this form will be subject to the following routine uses:

1. The information on this form will be treated confidentially to the extent allowed under the Freedom of Information Act (5 U.S.C. 552) and the Privacy Act (5 U.S.C 552a). Records from this system of records may be disclosed to the Department of Justice to determine whether disclosure of these records is required by the Freedom of Information Act.
2. A record from this system of records may be disclosed, as a routine use, in the course of presenting evidence to a court, magistrate, or administrative tribunal, including disclosures to opposing counsel in the course of settlement negotiations.
3. A record in this system of records may be disclosed, as a routine use, to a Member of Congress submitting a request involving an individual, to whom the record pertains, when the individual has requested assistance from the Member with respect to the subject matter of the record.
4. A record in this system of records may be disclosed, as a routine use, to a contractor of the Agency having need for the information in order to perform a contract. Recipients of information shall be required to comply with the requirements of the Privacy Act of 1974, as amended, pursuant to 5 U.S.C. 552a(m).
5. A record related to an International Application filed under the Patent Cooperation Treaty in this system of records may be disclosed, as a routine use, to the International Bureau of the World Intellectual Property Organization, pursuant to the Patent Cooperation Treaty.
6. A record in this system of records may be disclosed, as a routine use, to another federal agency for purposes of National Security review (35 U.S.C. 181) and for review pursuant to the Atomic Energy Act (42 U.S.C. 218(c)).
7. A record from this system of records may be disclosed, as a routine use, to the Administrator, General Services, or his/her designee, during an inspection of records conducted by GSA as part of that agency's responsibility to recommend improvements in records management practices and programs, under authority of 44 U.S.C. 2904 and 2906. Such disclosure shall be made in accordance with the GSA regulations governing inspection of records for this purpose, and any other relevant (*i.e.*, GSA or Commerce) directive. Such disclosure shall not be used to make determinations about individuals.
8. A record from this system of records may be disclosed, as a routine use, to the public after either publication of the application pursuant to 35 U.S.C. 122(b) or issuance of a patent pursuant to 35 U.S.C. 151. Further, a record may be disclosed, subject to the limitations of 37 CFR 1.14, as a routine use, to the public if the record was filed in an application which became abandoned or in which the proceedings were terminated and which application is referenced by either a published application, an application open to public inspection or an issued patent.
9. A record from this system of records may be disclosed, as a routine use, to a Federal, State, or local law enforcement agency, if the USPTO becomes aware of a violation or potential violation of law or regulation.

UNITED STATES PATENT AND TRADEMARK OFFICE

UNITED STATES DEPARTMENT OF COMMERCE
United States Patent and Trademark Office
Address: COMMISSIONER FOR PATENTS
P.O. Box 1450
Alexandria, Virginia 22313-1450
www.uspto.gov

| APPLICATION NO. | FILING DATE | FIRST NAMED INVENTOR | ATTORNEY DOCKET NO. | CONFIRMATION NO. |
|---|---|---|---|---|
| 12/982,003 | 12/30/2010 | Guoxing LI | O2-0724 | 7599 |

74878 7590 10/31/2011
O2MICRO INC
C/O MURABITO, HAO & BARNES LLP
TWO NORTH MARKET STREET
THIRD FLOOR
SAN JOSE, CA 95113

| EXAMINER | |
|---|---|
| ART UNIT | PAPER NUMBER |
| 2857 | |

| MAIL DATE | DELIVERY MODE |
|---|---|
| 10/31/2011 | PAPER |

**Please find below and/or attached an Office communication concerning this application or proceeding.**

The time period for reply, if any, is set in the attached communication.

UNITED STATES PATENT AND TRADEMARK OFFICE

Commissioner for Patents
United States Patent and Trademark Office
P.O. Box 1450
Alexandria, VA 22313-1450
www.uspto.gov

O2MICRO INC
C/O MURABITO, HAO & BARNES LLP
TWO NORTH MARKET STREET
THIRD FLOOR
SAN JOSE CA 95113

| | | |
|---|---|---|
| In re Application of | : | |
| Guoxing LI | : | DECISION ON PETITION |
| Application No. 12/982003 | : | TO MAKE SPECIAL UNDER |
| Filed: December 30, 2010 | : | THE GREEN TECHNOLOGY |
| Attorney Docket No. O2-0724 | : | PILOT PROGRAM |

This is a decision on the petition under 37 CFR 1.102, filed on December 30, 2010, to make the above-identified application special under the pilot program for applications pertaining to Green Technologies as set forth 74 Federal Register Notice 64666 (December 8, 2009) and amended by 75 Federal Register Notice 28554 (May 21, 2010) and 75 Federal Register Notice 69049 (November 10, 2010).

The petition is **DISMISSED**.

If reconsideration of this decision is desired, a petition for reconsideration must be filed within ONE (1) MONTH OR THIRTY (30) DAYS from the mail date of this decision, whichever is longer. No extension of this time limit can be granted under 37 CFR 1.136(a) or (b). The petition for reconsideration should include an exhaustive attempt to provide the lacking item(s) noted below, since, after a decision on the petition for reconsideration, no further reconsideration or review of the matter will be undertaken by the Director.

A grantable petition to make an application special under 37 CFR 1.102 and the pilot program as set forth in 74 FR 64666 must be directed to a nonprovisional application filed under 35 USC 111(a) or be a national stage entry under 35 USC 371, exclusive of any reissue applications and be filed prior to the date of the notice, December 8, 2009.

In order to qualify for special status, the following requirements must be met. 1) The application must have no more than 3 independent claims and no more than 20 total claims. 2) The application must not contain any multiple dependent claims. 3) The petition must state the basis for seeking special status, i.e., the claimed invention either: A) materially enhances the quality of the environment or B) materially contributes to: i) the discovery or development of renewable energy resources, ii) the more efficient utilization and conservation of energy resources, or iii) greenhouse gas emission reduction. 4) If the disclosure is not clear on its face that the claimed invention materially contributes under category (A) or (B), the petition must be accompanied by a statement by the applicant, assignee, or an attorney/agent registered to practice before the

Office explaining how the materiality standard is met. 5) A statement that applicant will agree to make an election without traverse in a telephonic interview if a restriction requirement is made by the examiner. 6) The petition to make special must be filed electronically. 7) The petition must be filed at least one day prior to the date that a first Office Action appears in the Patent Application Information Retrieval (PAIR) system. 8) The petition must be accompanied by a request for early publication in compliance with 37 CFR 1.219 and include the publication fee as set forth in 37 CFR 1.18(d).

The requirement for a fee for consideration of the petition to make special for applications pertaining to Green Technologies has been waived.

The petition lacks item 4.

In regard to item 4, applicant's statement pertaining to how the materiality standard is met does not satisfy the requirements for this pilot. The petition alleges that the claimed invention contributes to the more efficient utilization and conservation of energy and materially enhances the quality of the environment through energy conservation. The claims are not directed to renewable energy resources. The materiality standard does not permit an applicant to speculate as to how a hypothetical end-user might specially apply the invention in a manner that could contribute to the more efficient utilization and conservation of energy. Any argument that the claimed invention can be used with renewable energy resources is considered speculate as to how a hypothetical end-user might specially apply the claimed invention. Further, it is not readily apparent how the claimed invention contributes to more efficient utilization and conservation of energy. The storage of energy does not equate to more efficient utilization and conservation of energy.

Any reconsideration of this decision should be submitted through the USPTO electronic filing system, EFS-Web, and selecting the document description of "Petition for Green Tech Pilot" on the EFS-Web screen.

Telephone inquiries concerning this decision should be directed to Colleen Dunn at 571-272-1170.

The application is being forwarded to the appropriate Technology Center Art Unit for action in its regular turn.

/Colleen Dunn/

---

Colleen Dunn
Quality Assurance Specialist
Technology Center 2800

IN THE UNITED STATES PATENT AND TRADEMARK OFFICE

Applicant: Li
Serial No.: 12/982,003
Filed: December 30, 2010
Confirmation No.: 7599

Examiner: TBD
Group Art Unit: 2857

Title: BATTERY MANAGEMENT SYSTEMS FOR PROTECTING BATTERIES FROM FAULT CONDITIONS

Mail Stop Petition
Commissioner for Patents
P.O Box 1450
Alexandria, VA 22313-1450

PETITION FOR RECONSIDERATION OF DISMISSAL OF PETITION TO MAKE SPECIAL UNDER THE GREEN TECHNOLOGY PILOT PROGRAM

1. Applicant hereby petitions to reconsider the dismissal of the Petition to Make Special under the Green Technology Pilot Program ("the Petition").

2. According to the Decision on Petition to Make Special under the Green Technology Pilot Program, the Petition was dismissed because it was contended Applicant's statement pertaining to how the materiality standard is met did not satisfy the requirements for the Green Technology Pilot Program. Applicant disagrees with this contention.

3. Applicant hereby submits a Supplemental Statement of Special Status and a Preliminary Amendment in support of this Petition for Reconsideration.

The Commissioner is hereby authorized to charge fees associated with this communication or credit any overpayment to Deposit Account No.: 50-4160.

Please direct all correspondence concerning the above-identified application to the following address:

MURABITO HAO & BARNES LLP
Two North Market Street, Third Floor
San Jose, California 95113

Respectfully submitted,

MURABITO HAO & BARNES LLP

Dated: November 30, 2011

/William A. Zarbis/

William A. Zarbis
Registration No.: 46,120
Address: Two North Market Street
Third Floor
San Jose, CA 95113
Phone: (408) 938-9080 Ext. 113

UNITED STATES PATENT AND TRADEMARK OFFICE

UNITED STATES DEPARTMENT OF COMMERCE
United States Patent and Trademark Office
Address: COMMISSIONER FOR PATENTS
P.O. Box 1450
Alexandria, Virginia 22313-1450
www.uspto.gov

| APPLICATION NO. | FILING DATE | FIRST NAMED INVENTOR | ATTORNEY DOCKET NO. | CONFIRMATION NO. |
|---|---|---|---|---|
| 12/982,003 | 12/30/2010 | Guoxing LI | O2-0724 | 7599 |

74878 7590 12/09/2011
O2MICRO INC
C/O MURABITO, HAO & BARNES LLP
TWO NORTH MARKET STREET
THIRD FLOOR
SAN JOSE, CA 95113

| EXAMINER |
|---|

| ART UNIT | PAPER NUMBER |
|---|---|
| 2857 | |

| MAIL DATE | DELIVERY MODE |
|---|---|
| 12/09/2011 | PAPER |

**Please find below and/or attached an Office communication concerning this application or proceeding.**

The time period for reply, if any, is set in the attached communication.

UNITED STATES PATENT AND TRADEMARK OFFICE

Commissioner for Patents
United States Patent and Trademark Office
P.O. Box 1450
Alexandria, VA 22313-1450
www.uspto.gov

12/9/11

O2MICRO INC
C/O MURABITO, HAO & BARNES LLP
TWO NORTH MARKET STREET
THIRD FLOOR
SAN JOSE CA 95113

| | | |
|---|---|---|
| In re Application of | : | |
| Guoxing Li | : | DECISION ON PETITION |
| Application No. 12/982,003 | : | TO MAKE SPECIAL UNDER |
| Filed: December 30, 2010 | : | THE GREEN TECHNOLOGY |
| Attorney Docket No. O2-0724 | : | PILOT PROGRAM |

This is a decision on the petition under 37 CFR 1.102, filed November 30, 2011, to make the above-identified application special under the pilot program for applications pertaining to Green Technologies as set forth in 74 Federal Register Notice 64666 (December 8, 2009) and amended by 75 Federal Register Notice 28554 (May 21, 2010) and 75 Federal Register Notice 69049 (November 10, 2010).

The petition is **GRANTED**.

A grantable petition to make an application special under 37 CFR 1.102 and the pilot program as set forth in 74 FR 64666 must be directed to a nonprovisional application filed under 35 USC 111(a) or be a national stage entry under 35 USC 371, exclusive of any reissue applications.

In order to qualify for special status, the following requirements must be met. 1) The application must have no more than 3 independent claims and no more than 20 total claims. 2) The application must not contain any multiple dependent claims. 3) The petition must state the basis for seeking special status, i.e., the claimed invention either: A) materially enhances the quality of the environment or B) materially contributes to: i) the discovery or development of renewable energy resources, ii) the more efficient utilization and conservation of energy resources, or iii) greenhouse gas emission reduction. 4) If the disclosure is not clear on its face that the claimed invention materially contributes under category (A) or (B), the petition must be accompanied by a statement by the applicant, assignee, or an attorney/agent registered to practice before the Office explaining how the materiality standard is met. 5) A statement that applicant will agree to make an election without traverse in a telephonic interview if a restriction requirement is made by the examiner. 6) The petition to make special must be filed electronically. 7) The petition must be filed at least one day prior to the date that a first Office Action appears in the Patent Application Information Retrieval (PAIR) system. 8) The petition must be accompanied by a request for early publication in compliance with 37 CFR 1.219 and include the publication fee as set forth in 37 CFR 1.18(d).

The requirement for a fee for consideration of the petition to make special for applications pertaining to Green Technologies has been waived.

The instant petition complies with items 1 – 8 above. Accordingly, the above-identified application has been accorded "special" status.

Telephone inquires concerning this decision should be directed to Blaine Copenheaver at 571-272-1156.

The application is being forwarded to the examiner for action on the merits commensurate with this decision.

/Blaine Copenheaver/

Blaine Copenheaver
Quality Assurance Specialist
Technology Center 1700

UNITED STATES PATENT AND TRADEMARK OFFICE

Commissioner for Patents
United States Patent and Trademark Office
P.O. Box 1450
Alexandria, VA 22313-1450
www.uspto.gov

MARGER JOHNSON & MCCOLLOM, PC
210 SW MORRISON STREET
SUITE 400
PORTLAND, OR 97204

MAILED
FEB 28 2011
OFFICE OF PETITIONS

In re Application of

Barrie Gilbert, et al.
Application No. 12/982,026
Filed: December 30, 2010
Attorney Docket No. 1482-0303

DECISION ON PETITION
TO MAKE SPECIAL UNDER
37 CFR 1.102(c)(1)

This is a decision on the petition under 37 CFR 1.102(c)(1), filed January 19, 2011, to make the above-identified application special based on applicant's age as set forth in M.P.E.P. § 708.02, Section IV.

The petition is **GRANTED**.

A grantable petition to make an application special under 37 CFR 1.102(c)(1) and MPEP § 708.02, Section IV: Applicant's Age must be accompanied by evidence showing that at least one of the applicants is 65 years of age, or more, such as a birth certificate or a statement by applicant. No fee is required

The instant petition includes a statement from applicant's representative that he is in possession of proof of applicant Barrie Gilbert's age. Accordingly, the above-identified application has been accorded "special" status.

Telephone inquiries concerning this decision should be directed to undersigned at 571-272-1642.

All other inquiries concerning either the examination or status of the application should be directed to the Technology Center.

The application is being forwarded to the Technology Center Art Unit 2817 for action on the merits commensurate with this decision.

/AMW/
April M. Wise
Petitions Examiner
Office of Petitions

UNITED STATES PATENT AND TRADEMARK OFFICE

Commissioner for Patents
United States Patent and Trademark Office
P.O. Box 1450
Alexandria, VA 22313-1450
www.uspto.gov

INTEL CORPORATION
c/o CPA Global
P.O. BOX 52050
MINNEAPOLIS MN 55402

**MAILED**
JAN 24 2012
**OFFICE OF PETITIONS**

In re Application of
Gary Solomon et al.
Application No. 12/982,040
Filed: December 30, 2010
Attorney Docket No: **P26718C2**

ON PETITION

This is a decision on the petition filed December 30, 2011 under 37 CFR 1.137(b),[1] to revive the above-identified application.

The petition is **GRANTED**.

This application became abandoned May 24, 2011 for failure to timely reply to the non-Final Office Action mailed February 22, 2011 within the shortened statutory period of three months set for reply. Accordingly, a Notice of Abandonment was mailed September 15, 2011.

This matter is being referred to Technology Center 2182 for appropriate action on the amendment filed December 30, 2011.

Telephone inquiries concerning this matter should be directed to the undersigned Petitions Attorney at (571) 272-3212.

Patricia Faison-Ball
Senior Petitions Attorney
Office of Petitions

---

[1]Effective December 1, 1997, the provisions of 37 CFR 1.137(b) now provide that where the delay in reply was unintentional, a petition may be filed to revive an abandoned application or a lapsed patent pursuant to 37 CFR 1.137(b). A grantable petition filed under the provisions of 37 CFR 1.137(b) must be accompanied by:

(1) the required reply, unless previously filed. In a nonprovisional application abandoned for failure to prosecute, the required reply may be met by the filing of a continuing application. In a nonprovisional application filed on or after June 8, 1995, and abandoned for failure to prosecute, the required reply may also be met by the filing of a request for continued examination in compliance with § 1.114. In an application or patent, abandoned or lapsed for failure to pay the issue fee or any portion thereof, the required reply must be the payment of the issue fee or any outstanding balance thereof. In an application abandoned for failure to pay the publication fee, the required reply must include payment of the publication fee.

(2) the petition fee as set forth in 37 CFR 1.17(m);

(3) a statement that the entire delay in filing the required reply from the due date for the reply until the filing of a grantable petition pursuant to 37 CFR 1.137(b) was unintentional. The Director may require additional information where there is a question whether the delay was unintentional; and

(4) any terminal disclaimer (and fee as set forth in 37 CFR 1.20(d)) required pursuant to 37 CFR 1.137(c)).

UNITED STATES PATENT AND TRADEMARK OFFICE

UNITED STATES DEPARTMENT OF COMMERCE
United States Patent and Trademark Office
Address: COMMISSIONER FOR PATENTS
P.O. Box 1450
Alexandria, Virginia 22313-1450
www.uspto.gov

| APPLICATION NO. | FILING DATE | FIRST NAMED INVENTOR | ATTORNEY DOCKET NO. | CONFIRMATION NO. |
|---|---|---|---|---|
| 12/982,056 | 12/30/2010 | Jose Jorge Prado-Garcia | PRD-002 | 7696 |

53014 7590 01/31/2011
Clause Eight Intell. Prop. Service
P.O Box 131270
Carlsbad, CA 92013

| EXAMINER |
|---|

| ART UNIT | PAPER NUMBER |
|---|---|
| 3672 | |

| MAIL DATE | DELIVERY MODE |
|---|---|
| 01/31/2011 | PAPER |

**Please find below and/or attached an Office communication concerning this application or proceeding.**

The time period for reply, if any, is set in the attached communication.

UNITED STATES PATENT AND TRADEMARK OFFICE

Commissioner for Patents
United States Patent and Trademark Office
P.O. Box 1450
Alexandria, VA 22313-1450
www.uspto.gov

JAN 3 1 2011

Clause Eight Intellectual Property Service
P. O. Box 131270
Carlsbad, CA 92310

| | |
|---|---|
| In re application of<br>Jose Jorge Prado-Garcia<br>Application No. 12/982,056<br>Filed: December 30, 2010<br>For: APPARATUS AND METHOD FOR CONTAINING OIL FROM A DEEP WATER OIL WELL | : **DECISION ON PETITION**<br>: **TO MAKE SPECIAL FOR**<br>: **NEW APPLICATION**<br>: **UNDER 37 CFR 1.102** |

This is a decision on the petition filed on December 30, 2010 to make the above-identified application special for accelerated examination procedure under 37 C.F.R. § 1.102(d).

The petition to make the application special is **DISMISSED**.

REGULATION AND PRACTICE

A grantable petition to make special under 37 C.F.R. § 1.102(d) and pursuant to the "Change to Practice for Petitions in Patent Applications to Make Special and for Accelerated Examination" published in the Federal Register on June 26, 2006 (71 Fed. Reg. 36323), must satisfy the following conditions:

I. Conditions Regarding the Application:

1. the application must be a non-reissue utility or design application filed under 37 CFR 1.111(a);

2. the application, the petition and the required fees must be filed electronically using the USPTO's electronic filing system (EFS), or EFS-web; if not filed electronically, a statement asserting that EFS and EFS-web were not available during the normal business hours.

3. at the time of filing, the application must be complete under 37 CFR 1.51 and in condition for examination;

4. the application must contain three or fewer independent claims and twenty or fewer total claims and the claims must be directed to a single invention.

II. Conditions Regarding the Petition:

The petition must:

1. be filed with the application;

2. include a statement that applicant agrees not to separately argue the patentability of any independent claim during any appeal in the application;

3. include a statement that applicant agrees to make an election without traverse in a telephone interview.

4. include a statement that applicant agrees to conduct such an interview when requested by the examiner.

5. include a statement, made based on a good faith belief, that a preexamination search in compliance with the following requirements, was conducted, including an identification of the field of search by United States class and subclass, where applicable, and for database searches, the search logic or chemical structure or sequence used as a query, the name of the file(s) searched and the database service, and the date of the search.

The preexamination search must:

5.1 involve U.S. patents and patent application publications, foreign patent documents, and non-patent literature, unless the applicant can justify with reasonable certainty that no references more pertinent than those already identified are likely to be found in the eliminated sources and includes such a justification with this statement;

5.2. be directed to the claimed invention and encompass all of the features of the claims, giving the claims the broadest reasonable expectation;

5.3. encompass the disclosed features that may be claimed.

6. must provide in support of the petition an accelerated examination support document.

An accelerated examination support document must include:

6.1. an information disclosure statement (IDS) in compliance with 37 CFR 1.98 citing each reference deemed most closely related to the subject matter of each of the claims;

6.2. an identification of all the limitations in the claims that are disclosed by the reference specifying where the limitation is disclosed in the cited reference;

6.3. a detailed explanation of how each of the claims are patentable over the references cited with particularity required by 37 CFR 1.111(b) and (c);

6.4. a concise statement of the utility of the invention as defined in each of the independent claims (unless the application is a design application);

6.5. a showing of where each limitation of the claims finds support under 35 USC 112, first paragraph, in the written description of the specification. If applicable, the showing must also identify: (1) each means- (or step) plus-function claim element that invokes consideration under 35 UDC 112, sixth paragraph; and (2) the structure, material, or acts in the specification that corresponds to each means- (or step) plus-function claim element that invokes consideration under 35 UDC 112, sixth paragraph; if the application claims the benefit of one or more applications under title 35, United States Code, the showing must also include where each limitation of the claims finds support under 35 USC 112, first paragraph, in each such application in which such supports exists;

6.6. an identification of any cited references that may be disqualified under 35 USC 103(c).

REVIEW OF FACTS

The petition in this case fails to comply with conditions II.5.2, II.6.2, II.6.3, and II.6.5, above.

As to condition II.5.2, the petition lacks an indication of a preexamination search that encompasses all of the features of the claims. With respect to the classification search, in addition to the areas searched, the search needs to include at least a search of 166/345 (where the application is classified), 363 and 405/224, 224.2. Additionally, it does not appear that an acceptable text search had been completed. The search logic used by the applicant as listed in the Search document appears to be misdirected, lacking the claimed terms of "anchor"," anchoring", "riser" or "riser section", "valves", "pressure" or anything synonymous with them. The search looks to be possibly more related to a parent application. Search logic encompassing the "broadest reasonable interpretation" of the claimed invention is required. The USPTO website has an example of the proper manner of performing and documenting a preexamination search for Accelerated Examination petitions at: http://www.uspto.gov/web/patents/accelerated/. Additionally, examples of sample search logic are provided below:

anchor$3 and riser same plurality and well and (oil hydrocarbon) and valve and pressure and suction$3
anchor$3 and riser and well and (oil hydrocarbon) and valve and pressure and suction$3
riser same section and well and (oil hydrocarbon) and valve and pressure and suction$3
riser same section and well and (oil hydrocarbon) and inlet same valve and outlet and pressure and suction$3
riser same section and well and (oil hydrocarbon) and valve and pressure and suction$3 and (offshore subsea)
riser and well and (oil hydrocarbon) and valve and pressure and suction$3 and (offshore subsea)

The sample search logic is not meant to be the sole search logic that can or should be employed in this application, but is meant solely as an example for applicant's assistance.
The NPL search is seen as being deficient as well. One required NPL database would be Dialog, which is an all purpose database; and specific databases there are GeoRef & Petroleum Abstacts.

Applicant's statement that there are no disclosed features that are unclaimed at this time (beyond applicant's single claim) that may be claimed later is noted.

As to condition II.6.2, there currently is not an adequate listing of all the limitations (or portions thereof) in each of the claims that are disclosed in each of the cited references, specifying where each of the limitations (or portions thereof) are disclosed in each of the references. It appears that in all of the 19 cited references not even a single references teaches even a single limitation of the single claim? Some of the portions of the claim, for example, but not limited to, *anchoring an apparatus* (such as a containment

structure); *riser sections* having valve arrangements with inlet/outlet valves, *flow tubes* (are notoriously well known); and there is art that teaches the use of riser sections having equalized pressures to flow oil through a flow tube, and thus it strains credulity to assert that nowhere in the prior art are located these claimed limitations. The lack of finding art on what appears to be limitations quite common in the art is an indication that a search of the 'broadest reasonable interpretation" of the invention has not been properly completed. It appears that the search may have been completed on the concept of the disclosed invention of the independent claims rather than the specifics of the "claimed invention", as is required. Overall, it appears that there is not even a single claimed limitation that is admitted as taught by the prior art or not separately patentable as obvious. While an application may contain allowable claims, or even rarely have all it's claims separately patentable, to suggest that there is not even a single claim limitation that is taught by the prior art is beyond believable.`

As to condition II.6.3, there is not a satisfactory detailed explanation of claim patentability over each of the references. The explanation needs to specify how each of the claims are patentable over each of the cited references. In the Detailed Explanation of Patentability applicant indicates that only some of the limitations in claim 1 make the claim patentable over each of the cited references, which implies that those limitations not mentioned are not patentable distinctions? However, as discussed above, applicant appeared to indicate that no limitations were taught by any of the cited references. This apparent inconsistency must be cleared up. What specifically is present in each claim deemed to be separately patentable needs to be made clear. Limitations need to be indicated as taught, patentable distinctions, or not taught but well known structures that are not seen as patentably distinguishing the claim.

The USPTO website has an example of the proper manner of documenting limitations taught by cited art, and the manner of explaining claim patentability over the references, for an Accelerated Examination Support Document at: http://www.uspto.gov/web/patents/accelerated/.

As to condition to II.6.5, the showing of where each limitation of each of the claims finds support under 35 USC 112 in the written description of the application is sufficient. However, similar support (if any) for the claimed invention must additionally be shown in the parent application upon which priority is claimed under 35 USC 120. Specifically, for parent application 12/875,080, a listing of where the limitations of the claim find support is necessary. If the disclosures are identical, this needs to be so stated, or indicated as substantially identical, with any distinctions being listed.

Therefore, the petition fails to meet the required conditions to be accorded special status under the accelerated examination procedure.

DECISION

For the above-stated reasons, the petition is **DISMISSED**. The application will therefore be taken up by the examiner for action in its regular turn.

Petitioner is given a single opportunity to perfect the petition. Any request for reconsideration of this decision must be submitted within 1 (one) month or 30 (thirty) days, whichever is longer, (no extension of time under 37 CFR 1.136(a)) from the date of this decision in order to be considered timely. Any request for reconsideration must address the deficiencies indicated above.

Petitioner is reminded that, upon granting of the special status of the application on request for reconsideration, the application will be processed expeditiously. However, due to the dismissal of the instant petition, examination may not be completed within twelve months of the filing date of the application.

Any inquiry regarding this decision should be directed to Quality Assurance Specialist Steven N. Meyers, at (571) 272-6611.

Steven N. Meyers,
Quality Assurance Specialist
Technology Center 3600

Sm/sm: 1/30/11

UNITED STATES PATENT AND TRADEMARK OFFICE

UNITED STATES DEPARTMENT OF COMMERCE
United States Patent and Trademark Office
Address: COMMISSIONER FOR PATENTS
P.O. Box 1450
Alexandria, Virginia 22313-1450
www.uspto.gov

| APPLICATION NO. | FILING DATE | FIRST NAMED INVENTOR | ATTORNEY DOCKET NO. | CONFIRMATION NO. |
|---|---|---|---|---|
| 12/982,056 | 12/30/2010 | Jose Jorge Prado-Garcia | PRD-002 | 7696 |

53014 7590 03/11/2011
Clause Eight Intell. Prop. Service
P.O Box 131270
Carlsbad, CA 92013

| EXAMINER |
|---|

| ART UNIT | PAPER NUMBER |
|---|---|
| 3672 | |

| MAIL DATE | DELIVERY MODE |
|---|---|
| 03/11/2011 | PAPER |

**Please find below and/or attached an Office communication concerning this application or proceeding.**

The time period for reply, if any, is set in the attached communication.

UNITED STATES PATENT AND TRADEMARK OFFICE

Commissioner for Patents
United States Patent and Trademark Office
P.O. Box 1450
Alexandria, VA 22313-1450
www.uspto.gov

MAR 1 1 2011

Clause Eight Intellectual Property Service
P. O. Box 131270
Carlsbad, CA 92310

| | |
|---|---|
| In re application of<br>Jose Jorge Prado-Garcia<br>Application No. 12/982,056<br>Filed: December 30, 2010<br>For: APPARATUS AND METHOD FOR CONTAINING OIL FROM A DEEP WATER OIL WELL | : **DECISION ON PETITION**<br>: **TO MAKE SPECIAL FOR**<br>: **NEW APPLICATION**<br>: **UNDER 37 CFR 1.102** |

This is a decision on the renewed petition filed on February 27, 2011, to make the above-identified application special for accelerated examination procedure under 37 C.F.R. § 1.102(d).

The renewed petition to make the application special is **GRANTED**.

The application is eligible for accelerated examination and the petition complies with the conditions for granting the application special status pursuant to the "Change to Practice for Petitions in Patent Applications to Make Special and for Accelerated Examination" published June 26, 2006, in the Federal Register. (71 Fed. Reg. 36323).

The prosecution of the instant application will be conducted expeditiously according to the following guidelines.

1. The application will be docketed to an examiner and taken up for action within two weeks of the date of this decision.

2. Restriction Practice:
If the examiner determines that the claims are not directed to a single invention, a telephone request to elect one single invention will be made pursuant to MPEP 812.01. As a prerequisite to the grant of this petition, the applicant has agreed to make an oral election, by telephone, without traverse. If the applicant refuses to make an election without traverse, or the examiner cannot reach the applicant after a reasonable effort, the examiner will treat the first claimed invention

(invention defined by claim 1) as having being constructively elected without traverse for examination.

3. Office action:
If it is determined that, after appropriate consultation, there is a potential rejection or any other issue to be addressed, the examiner will telephone the applicant and arrange an interview to discuss and resolve the issue. An Office action, other than a Notice of Allowance and Fee(s) Due (Notice of Allowance), will not be issued unless either: 1) an interview was conducted but did not result in agreed to action that places the application in condition for allowance, or, 2) a determination is made that an interview would be unlikely to result in the application being placed in condition for allowance, and 3) an internal conference has been held to review any rejection of any claim.

4. Time for Reply:
An Office action other than a Notice of Allowance or a final Office action will set a shortened statutory period of one month or thirty days, whichever is longer, for reply with no extension of time available under 37 CFR 1.136(a). Failure to timely file a reply within this non-extendible period for reply will result in the abandonment of the application.

5. Reply by Applicant:
A timely reply to an Office action other than the Notice of Allowance must be submitted electronically via EFS or EFS-web and limited to addressing the rejections, objections and requirement made. Any amendment that attempts to: 1) add claims which would result in more than three pending independent claims or more than twenty pending total claims; 2) present claims not encompassed by the pre-examination search or an updated accelerated examination support document; or 3) present claims that are directed to a non-elected invention or an invention other than that previously claimed and examined in the application, will be treated as not fully responsive and will not be entered.

For any amendment to the claims (including any new claim) that is not encompassed by the accelerated examination support document, applicant must provide an updated accelerated examination support document that encompasses the amended or new claims at the time of filing of the amendment.

To proceed expeditiously with the examination, it is recommended that a reply with amendments made to any claim or with any new claim being added be accompanied by an updated accelerated examination support document or a statement explaining how the amended or new claim is supported by the original accelerated examination support document.

6. Information Disclosure Statement (IDS):
Any IDS filed during prosecution must be submitted electronically via EFS or EFS-web, accompanied by an updated accelerated examination support document, and be in compliance with 37 CFR 1.97 and 1.98.

7. Post-Allowance Processing:

To expedite processing of the allowed application into a patent, the applicant must: 1) pay the required fees within one month of the date of the Notice of Allowance, and 2) not file any post allowance papers not required by the Office. In no event may the issue fee be paid and accepted later than three months from the date of the Notice of Allowance.

8. After-Final and Appeal Procedures:
To expedite prosecution, after receiving the final Office action, applicant must: 1) promptly file a notice of appeal, an appeal brief and appeal fees; and 2) not request a pre-appeal brief conference.

Any amendment, affidavit or other evidence filed after final Office action must comply with applicable rules and the requirements outlined in numbered paragraphs 5 and 6 above.

On appeal, the application will proceed according to normal appeal procedures. After appeal, the application will again be treated special.

9. Proceedings Outside the Normal Examination Process:
If the application becomes involved in a proceeding that is outside the normal examination process (e.g., a secrecy order, national security review, interference proceeding, petitions under 37 CFR 1.181, 182 or 183), the application will be treated special before and after such proceeding.

10. Final Disposition:
The twelve month goal of this accelerated examination procedure ends with a final disposition. The mailing of a final Office action, a Notice of Allowance, the filing of a Notice of Appeal, or the filing of a Request for Continued Examination (RCE) is the final disposition.

If, during prosecution, a paper is not filed electronically using EFS-web, a reply is filed but is not fully responsive, the application is involved in an appeal, or a proceeding outside normal examination process, the application will still be examined expeditiously, however, the final disposition may occur more than twelve months from the filing of the application.

Any inquiry regarding this decision should be directed to Quality Assurance Specialist Steven N. Meyers, at (571) 272-6611.

Steven N. Meyers,
Quality Assurance Specialist
Technology Center 3600

Sm/sm: 3/10/11

**Doc Code: PET.GREEN**
**Document Description: Petition for Green Tech Pilot**

PTO/SB/420 (03-11)

# PETITION TO MAKE SPECIAL UNDER THE GREEN TECHNOLOGY PILOT PROGRAM

| | | |
|---|---|---|
| Attorney Docket Number: 397416 | Application Number (if known): 12/982,109 | Filing date: December 30, 2010 |
| First Named Inventor: Daniel Larrabee | | |
| Title: HYBRID TRANSMISSION USING PLANETARY GEARSET FOR MULTIPLE SOURCES OF TORQUE FOR MARINE, OR TWO WHEELED LAND VEHICLES | | |

**APPLICANT HEREBY REQUESTS TO PARTICIPATE IN THE GREEN TECHNOLOGY PILOT PROGRAM FOR THE ABOVE-IDENTIFIED APPLICATION. See Instruction Sheet on page 2.**

This petition must be timely filed electronically using the USPTO electronic filing system, EFS-Web.

1. By filing this petition:

   **Applicant is requesting early publication: Applicant hereby requests early publication under 37 CFR 1.219 and the publication fee set forth in 37 CFR 1.18(d) accompanies this request.**

2. By filing this petition: applicant is agreeing to make an election without traverse in a telephonic interview and elect an invention that meets the eligibility requirements for the Green Technology Pilot Program, if the Office determines that the claims are not obviously directed to a single invention. See Instruction Sheet.

3. This request is accompanied by statements of special status for the eligibility requirement.

4. The application contains no more than three (3) independent claims and twenty (20) total claims.

5. The application does not contain any multiple dependent claims.

6. Other attachments: _____

| | |
|---|---|
| Signature | Date 4/6/2011 |
| Name (Print/Typed) Guy Kevin Townsend | Registration Number 34033 |

***Note:*** *Signatures of all the inventors or assignees of record of the entire interest or their representative(s) are required in accordance with 37 CFR 1.33 and 11.18. Please see 37 CFR 1.4(d) for the form of the signature. If necessary, submit multiple forms for more than one signature, see below*.*

[x] *Total of 1 forms are submitted.

*If you need assistance in completing the form, call 1-800-PTO-9199 and select option 2.*

# UNITED STATES PATENT AND TRADEMARK OFFICE

| | | | |
|---|---|---|---|
| **Inventor(s):** | Daniel Larrabee et al. | **Examiner:** | |
| Appln. No.: | 12/982,109 | **Group Art Unit:** | |
| Filing Date: | December 30, 2010 | **Confirmation No.:** | 7811 |
| Title: | HYBRID TRANSMISSION USING PLANETARY GEARSET FOR MULTIPLE SOURCES OF TORQUE FOR MARINE, OR TWO WHEELED LAND VEHICLES | **Customer No.:** | 35657 |
| | | Docket No.: | 66888 - 397416 |

## STATEMENT OF SPECIAL STATUS FOR ELIGIBILITY FOR GREEN TECHNOLOGY PILOT PROGRAM

Applicants state that the present application meets all of the requirements for the Green Technology Pilot Program as presented in the Petition to Make Special as filed herewith with an early publication fee. The present application disclosed and claims a Green Technology involving the development of a new clutchless transmission for hybrid vehicles that allows simultaneous or alternating electric power input to the vehicle's propulsion system in combination with liquid fuel based power sources.

Applicants submit that this application meets all of the requirements for proceeding under the Green Technology Pilot Program.

Respectfully submitted,

FAEGRE & BENSON LLP

By: _____

Guy Kevin Townsend
Reg. No. 34,033
303-607-3636
Customer No.: 25764

Dated: April 6, 2011

fb.us.6595651.01

UNITED STATES PATENT AND TRADEMARK OFFICE

UNITED STATES DEPARTMENT OF COMMERCE
United States Patent and Trademark Office
Address: COMMISSIONER FOR PATENTS
P.O. Box 1450
Alexandria, Virginia 22313-1450
www.uspto.gov

| APPLICATION NO. | FILING DATE | FIRST NAMED INVENTOR | ATTORNEY DOCKET NO. | CONFIRMATION NO. |
|---|---|---|---|---|
| 12/982,109 | 12/30/2010 | Daniel Larrabee | 397416 | 7811 |

25764 7590 05/11/2011
FAEGRE & BENSON LLP
PATENT DOCKETING - INTELLECTUAL PROPERTY
2200 WELLS FARGO CENTER
90 SOUTH SEVENTH STREET
MINNEAPOLIS, MN 55402-3901

| EXAMINER |
|---|

| ART UNIT | PAPER NUMBER |
|---|---|
| 3617 | |

| NOTIFICATION DATE | DELIVERY MODE |
|---|---|
| 05/11/2011 | ELECTRONIC |

**Please find below and/or attached an Office communication concerning this application or proceeding.**

The time period for reply, if any, is set in the attached communication.

Notice of the Office communication was sent electronically on above-indicated "Notification Date" to the following e-mail address(es):

djohnson2@faegre.com
rhale@faegre.com
PatentDocketing@Faegre.com

UNITED STATES PATENT AND TRADEMARK OFFICE

Commissioner for Patents
United States Patent and Trademark Office
P.O. Box 1450
Alexandria, VA 22313-1450
www.uspto.gov

MAY 10 2011

FAEGRE & BENSON LLP
PATENT DOCKETING - INTELLECTUAL PROPERTY
2200 WELLS FARGO CENTER
90 SOUTH SEVENTH STREET
MINNEAPOLIS MN 55402-3901

| | | |
|---|---|---|
| In re Application of | : | |
| DANIEL LARRABEE et al. | : | DECISION ON PETITION |
| Application No. 12/982,109 | : | TO MAKE SPECIAL UNDER |
| Filed: December 30, 2010 | : | THE GREEN TECHNOLOGY |
| Attorney Docket No. 397416 | : | PILOT PROGRAM |

This is a decision on the petition under 37 CFR 1.102, filed on April 6, 2011, to make the above-identified application special under the pilot program for applications pertaining to Green Technologies as set forth in 74 Federal Register Notice 64666 (December 8, 2009) and amended by 75 Federal Register Notice 28554 (May 21, 2010) and 75 Federal Register Notice 69049 (November 10, 2010).

The petition is **GRANTED**.

A grantable petition to make an application special under 37 CFR 1.102 and the pilot program as set forth in 74 FR 64666 must be directed to a nonprovisional application filed under 35 USC 111(a) or be a national stage entry under 35 USC 371, exclusive of any reissue applications.

In order to qualify for special status, the following requirements must be met. 1) The application must have no more than 3 independent claims and no more than 20 total claims. 2) The application must not contain any multiple dependent claims. 3) The petition must state the basis for seeking special status, i.e., the claimed invention either: A) materially enhances the quality of the environment or B) materially contributes to: i) the discovery or development of renewable energy resources, ii) the more efficient utilization and conservation of energy resources, or iii) greenhouse gas emission reduction. 4) If the disclosure is not clear on its face that the claimed invention materially contributes under category (A) or (B), the petition must be accompanied by a statement by the applicant, assignee, or an attorney/agent registered to practice before the Office explaining how the materiality standard is met. 5) A statement that applicant will agree to make an election without traverse in a telephonic interview if a restriction requirement is made by the examiner. 6) The petition to make special must be filed electronically. 7) The petition must be filed at least one day prior to the date that a first Office Action appears in the Patent Application Information Retrieval (PAIR) system. 8) The petition must be accompanied by a request for early publication in compliance with 37 CFR 1.219 and include the publication fee as set forth in 37 CFR 1.18(d).

The requirement for a fee for consideration of the petition to make special for applications pertaining to Green Technologies has been waived.

The instant petition complies with items 1 – 8 above. Accordingly, the above-identified application has been accorded "special" status.

Telephone inquires concerning this decision should be directed to Lanna Mai at 571-272-6867.

The application is being forwarded to the Technology Center Art Unit 3617 for action on the merits commensurate with this decision.

/Lanna Mai/

Lanna Mai
Quality Assurance Specialist
Technology Center 3600

UNITED STATES PATENT AND TRADEMARK OFFICE

Commissioner for Patents
United States Patent and Trademark Office
P.O. Box 1450
Alexandria, VA 22313-1450
www.uspto.gov

DORSEY & WHITNEY LLP - MINNEAPOLIS (IP/PT-23)
INTELLECTUAL PROPERTY PRACTICE GROUP
ATTENTION: PATENT PROSECUTION DOCKETING DEPARTMENT
50 SOUTH SIXTH STREET SUITE 1500
MINNEAPOLIS MN 55402-1498

**MAILED**

MAY 16 2011

**OFFICE OF PETITIONS**

| | | |
|---|---|---|
| In re Application of | : | |
| Nelson, et al. | : | |
| Application No. 12/982,160 | : | DECISION ACCORDING STATUS |
| Filed: December 30, 2010 | : | UNDER 37 CFR 1.47(a) |
| Attorney Docket No. P201844.US.05 | : | |

This is in response to the petition under 37 CFR 1.47(a), filed April 14, 2011.

The petition under 37 CFR 1.47(a) is **GRANTED**.

Rule 47 applicant has demonstrated that inventor Johnson has refused to sign the declaration after having been presented with the application papers. Specifically, a copy of the application papers were forwarded to Johnson's last known address on March 8, 2011, but as of the mailing date of the petition, no executed declaration has been received.

The petition and declaration have been reviewed and determined to be in compliance with 37 CFR 1.47(a).

The application is hereby accorded Rule 47 status.

As provided in 37 CFR 1.47(c), the Office will provide notice of this application's filing to the non-signing inventor at the last known address provided in the petition. Notice will also be provided in the Official Gazette.

The application is being forwarded to the Office of Patent Application Processing for pre-examination processing.

Telephone inquiries related to this decision may be directed to the undersigned at (571)272-3207.

Cliff Congo
Petitions Attorney
Office of Petitions

UNITED STATES PATENT AND TRADEMARK OFFICE

Commissioner for Patents
United States Patent and Trademark Office
P.O. Box 1450
Alexandria, VA 22313-1450
www.uspto.gov

TOM JOHNSON
270 185TH ST
STAR PRAIRIE WI 54026

MAILED
MAY 16 2011
OFFICE OF PETITIONS

In re Application of :
Nelson, et al. :
Application No. 12/982,160 :
Filed: December 30, 2010 : LETTER
Title: Closure/Connector for Liner-Based Dispense Containers

Dear Mr. Johnson:

You are named as a joint inventor in the above-identified United States patent application filed under the provisions of 35 USC 116 (United States Code) and 37 CFR 1.47(a), Rules of Practice in Patent Cases. Should a patent be granted on the application you will be designated therein as joint inventor.

As a named inventor you are entitled to inspect any paper in the file wrapper of the application, order copies of all or any part thereof (at a prepaid cost per 37 CFR 1.19) or make your position of record in the application. Alternatively, you may arrange to do any of the preceding through a registered patent attorney or agent presenting written authorization from you. If you care to join the application, agent of record would presumably assist you. Joining in the application would entail the filing of an appropriate oath or declaration by you pursuant to 37 CFR 1.63.

Telephone inquiries regarding this communication should be directed to Petitions Attorney Cliff Congo at (571)272-3207. Requests for information regarding your application should be directed to the File Information Unit at (703) 308-2733. Information regarding how to pay for and order a copy of the application, or a specific paper in the application, should be directed to the Certification Division at (703) 308-9726 or 1-800-972-6382 (outside the Washington D.C. area).

Cliff Congo
Petitions Attorney
Office of Petitions

UNITED STATES PATENT AND TRADEMARK OFFICE

Commissioner for Patents
United States Patent and Trademark Office
P.O. Box 1450
Alexandria, VA 22313-1450
www.uspto.gov

MAILED
NOV 21 2011
OFFICE OF PETITIONS

**KAGAN BINDER, PLLC**
**221 MAIN STREET NORTH**
**SUITE 200**
**STILLWATER MN 55082**

Applicant: Emily R. Rolfes Meyering
Appl. No.: 12/982,214
Filing Date: December 30, 2010
Title: HYDROPHOBIC POLYSACCHARIDES WITH PENDENT GROUPS HAVING TERMINAL REACTIVE FUNCTIONALITIES AND MEDICAL USES THEREOF
Attorney Docket: SRM0133/US
Pub. No.: US 20110159067 A1
Pub. Date: June 30, 2011

This is a decision on the request for a corrected patent application publication under 37 CFR 1.221(b), received on August 23, 2011, for the above-identified application.

The request is granted.

The corrected patent application publication will be published in due course, unless the patent issues before the application is republished.

Inquiries relating to this matter may be directed to Karen Creasy at (571) 272-3208.

/Christopher Bottorff/

Christopher Bottorff
Petitions Examiner
Office of Petitions

UNITED STATES PATENT AND TRADEMARK OFFICE

UNITED STATES DEPARTMENT OF COMMERCE
United States Patent and Trademark Office
Address: COMMISSIONER FOR PATENTS
P.O. Box 1450
Alexandria, Virginia 22313-1450
www.uspto.gov

| APPLICATION NO. | FILING DATE | FIRST NAMED INVENTOR | ATTORNEY DOCKET NO. | CONFIRMATION NO. |
|---|---|---|---|---|
| 12/982,239 | 12/30/2010 | Bo YANG | HW707402 | 8025 |

77399 7590 04/29/2011
Leydig, Voit & Mayer, Ltd
(for Huawei Technologies Co., Ltd)
Two Prudential Plaza Suite 4900
180 North Stetson Avenue
Chicago, IL 60601

| EXAMINER |
|---|
| BURD, KEVIN MICHAEL |

| ART UNIT | PAPER NUMBER |
|---|---|
| 2611 | |

| NOTIFICATION DATE | DELIVERY MODE |
|---|---|
| 04/29/2011 | ELECTRONIC |

**Please find below and/or attached an Office communication concerning this application or proceeding.**

The time period for reply, if any, is set in the attached communication.

Notice of the Office communication was sent electronically on above-indicated "Notification Date" to the following e-mail address(es):

Chgpatent@leydig.com
uspatent@huawei.com

UNITED STATES PATENT AND TRADEMARK OFFICE

Commissioner for Patents
United States Patent and Trademark Office
P.O. Box 1450
Alexandria, VA 22313-1450
www.uspto.gov

Leydig, Voit & Mayer, Ltd
(for Huawei Technologies Co., Ltd)
Two Prudential Plaza Suite 4900
180 North Stetson Avenue
Chicago IL 60601

| | |
|---|---|
| In re Application of:<br>YANG, BO et al<br>Serial No.: 12/982,239<br>Filed: December 30, 2010<br><br>Title: **MAPPING METHOD AND DEVICE FOR DISCONTINUOUS TRANSMISSION BITS** | DECISION ON PETITION TO MAKE SPECIAL FOR NEW APPLICATION UNDER 37 C.F.R. § 1.102 & M.P.E.P. § 708.02 |

This is a decision on the petition filed on December 30, 2010 requesting to make the above-identified application special for accelerated examination procedure under 37 C.F.R. § 1.102(d).

The petition to make the application special is **GRANTED**.

The application is eligible for accelerated examination and the petition complies with the conditions for granting the application special status pursuant to the "Change to Practice for Petitions in Patent Applications to Make Special and for Accelerated Examination" published June 26, 2006, in the Federal Register. (71 Fed. Reg. 36323).

The prosecution of the instant application will be conducted expeditiously according to the following guidelines.

1. The application will be docketed to an examiner and taken up for action within two weeks of the date of this decision.

2. Restriction Practice:
   If the examiner determines that the claims are not directed to a single invention, a telephone request to elect one single invention will be made pursuant to MPEP 812.01. As a prerequisite to the grant of this petition, the applicant has agreed to make an oral election, by telephone, without traverse. If the applicant refuses to make an election without traverse, or the examiner cannot reach the applicant after a reasonable effort, the examiner will treat the first claimed invention (invention defined by claim 1) as having being constructively elected without traverse for examination.

3. Office action:
If it is determined that, after appropriate consultation, there is a potential rejection or any other issue to be addressed, the examiner will telephone the applicant and arrange an interview to discuss and resolve the issue. An Office action, other than a Notice of Allowance and Fee(s) Due (Notice of Allowance), will not be issued unless either: 1) an interview was conducted but did not result in agreed to action that places the application in condition for allowance, or, 2) a determination is made that an interview would be unlikely to result in the application being placed in condition for allowance, and 3) an internal conference has been held to review any rejection of any claim.

4. Time for Reply:
An Office action other than a Notice of Allowance or a final Office action will set a shortened statutory period of one month or thirty days, whichever is longer, for reply with no extension of time available under 37 CFR 1.136(a). Failure to timely file a reply within this non-extendible period for reply will result in the abandonment of the application.

5. Reply by Applicant:
A timely reply to an Office action other than the Notice of Allowance must be submitted electronically via EFS or EFS-web and limited to addressing the rejections, objections and requirement made. Any amendment that attempts to: 1) add claims which would result in more than three pending independent claims or more than twenty pending total claims; 2) present claims not encompassed by the pre-examination search or an updated accelerated examination support document; or 3) present claims that are directed a non-elected invention or an invention other than that previously claimed and examined in the application, will be treated as not fully responsive and will not be entered.

   For any amendment to the claims (including any new claim) that is not encompassed by the accelerated examination support document, applicant must provide an updated accelerated examination support document that encompasses the amended or new claims at the time of filing of the amendment.

   To proceed expeditiously with the examination, it is recommended that a reply with amendments made to any claim or with any new claim being added be accompanied by an updated accelerated examination support document or a statement explaining how the amended or new claim is supported by the original accelerated examination support document.

6. Information Disclosure Statement (IDS):
Any IDS filed during prosecution must be submitted electronically via EFS or EFS-web, accompanied by an updated accelerated examination support document, and be in compliance with 37 CFR 1.97 and 1.98.

7. Post-Allowance Processing:
To expedite processing of the allowed application into a patent, the applicant must: 1) pay the required fees within one month of the date of the Notice of Allowance, and 2) not

file any post allowance papers not required by the Office. In no event may the issue fee be paid and accepted later than three months from the date of the Notice of Allowance.

8. After-Final and Appeal Procedures:
   To expedite prosecution, after receiving the final Office action, applicant must: 1) promptly file a notice of appeal, an appeal brief and appeal fees; and 2) not request a pre-appeal brief conference.

   Any amendment, affidavit or other evidence filed after final Office action must comply with applicable rules and the requirements outlined in numbered paragraphs 5 and 6 above.

   On appeal, the application will proceed according to normal appeal procedures. After appeal, the application will again be treated special.

9. Proceedings Outside the Normal Examination Process:
   If the application becomes involved in a proceeding that is outside the normal examination process (e.g., a secrecy order, national security review, interference proceeding, petitions under 37 CFR 1.181, 182 or 183), the application will be treated special before and after such proceeding.

10. Final Disposition:
    The twelve month goal of this accelerated examination procedure ends with a final disposition. The mailing of a final Office action, a Notice of Allowance, the filing of a Notice of Appeal, or the filing of a Request for Continued Examination (RCE) is the final disposition.

If, during prosecution, a paper is not filed electronically using EFS-web, a reply is filed but is not fully responsive, the application is involved in an appeal, or a proceeding outside normal examination process, the application will still be examined expeditiously, however, the final disposition may occur more than twelve months from the filing of the application.

Any inquiry regarding this decision should be directed to Michael Horabik, Quality Assurance Specialist, at (571) 272-3068.

/Michael Horabik/

Quality Assurance Specialist
Technology Center 2600
Communications

UNITED STATES PATENT AND TRADEMARK OFFICE

UNITED STATES DEPARTMENT OF COMMERCE
United States Patent and Trademark Office
Address: COMMISSIONER FOR PATENTS
P.O. Box 1450
Alexandria, Virginia 22313-1450
www.uspto.gov

| APPLICATION NO. | FILING DATE | FIRST NAMED INVENTOR | ATTORNEY DOCKET NO. | CONFIRMATION NO. |
|---|---|---|---|---|
| 12/982,263 | 12/30/2010 | Shigetomo Tamai | 14426/3 | 8066 |

757 7590 03/24/2011
BRINKS HOFER GILSON & LIONE
P.O. BOX 10395
CHICAGO, IL 60610

| EXAMINER |
|---|

| ART UNIT | PAPER NUMBER |
|---|---|
| 2431 | |

| MAIL DATE | DELIVERY MODE |
|---|---|
| 03/24/2011 | PAPER |

**Please find below and/or attached an Office communication concerning this application or proceeding.**

The time period for reply, if any, is set in the attached communication.

UNITED STATES PATENT AND TRADEMARK OFFICE

Commissioner for Patents
United States Patent and Trademark Office
P.O. Box 1450
Alexandria, VA 22313-1450
www.uspto.gov

BRINKS HOFER GILSON & LIONE
P.O. BOX 10395
CHICAGO IL 60610

In re Application of: Tamai et al.
Application No. 12/982,263
Filed: December 30, 2010
For: **CONTENT PRESENTATION-TYPE AUTHENTICATION SYSTEM**

DECISION ON REQUEST TO PARTICIPATE IN PATENT PROSECUTION HIGHWAY PROGRAM AND PETITION TO MAKE SPECIAL UNDER 37 CFR 1.102(d)

MAILED

MAR 24 2011

DIRECTOR OFFICE
TECHNOLOGY CENTER 2400

This is a decision on the request to participate in the Patent Prosecution Highway (PPH) program and the renewed petition under 37 CFR 1.102(d), filed February 9, 2011, to make the above-identified application special.

The petition is **GRANTED.**

A grantable request to participate in the PPH program and petition to make special require:

(1) The U.S. application is
(a) a Paris Convention application which either (i) validly claims priority under 35 U.S.C. 119(a) and 37 CFR 1.55 to one or more applications filed in the JPO, or (ii) validly claims priority to a PCT application that contains no priority claims, or
(b) a national stage application under the PCT (an application which entered the national stage in the U.S. from a PCT international application after compliance with 35 U.S.C. 371), which PCT application (i) validly claims priority to an application filed in the JPO, or (ii) validly claims priority to a PCT application that contains no priority claims, or (iii) contains no priority claim, or
(c) a so-called bypass application filed under 35 U.S.C. 111 (a) which validly claims benefit under 35 U.S.C. 120 to a PCT application, which PCT application (i) validly claims priority to an application filed in the JPO, or (ii) validly claims priority to a PCT application that contains no priority claims, or (iii) contains no priority claim.

Where the JPO application that contains the allowable/patentable claims is not the same application for which priority is claimed in the U.S. application, applicant must identify the relationship between the JPO application that contains the allowable/patentable claims and the JPO priority application claimed in the U.S. application;

(2) Applicant must submit a copy of:
a. The allowable/patentable claim(s) from the Japanese application(s);
b. An English translation of the allowable/patentable claim(s), if the claims were published in a language other than English); and
c. A statement that the English translation is accurate;

(3) Applicant must:
a. Ensure that all the claims in the U.S. application sufficiently correspond or be amended to sufficiently correspond to the allowable/patentable claim(s) in the JPO application(s) and
b. Submit a claim correspondence table in English;

(4) Examination of the U.S. application has not begun;

(5) Applicant must submit:
a. A copy of all the office action(s) (which are relevant to patentability), excluding "Decision to Grant a Patent" from each of the Japanese application(s) containing the allowable/patentable claim(s);
b. An English language translation of the JPO office action(s) (if the office action(s) are not in the English language); and
c. A statement that the English translation is accurate;

(6) Applicant must submit:
a. An IDS listing the documents cited by the JPO examiner in the JPO office action (unless already filed in this application); and
b. Copies of all the documents cited in the JPO office action, except U.S. patents or U.S. patent application publications (unless already filed in this application).

The request to participate in the PPH program and petition are found to comply with all the above requirements. Accordingly, the above-identified application has been accorded "special" status.

Telephone inquiries concerning this decision should be directed to Christopher Grant at 571-272-7294.

All other inquiries concerning the examination or status of the application is accessible in the PAIR system at http://www.uspto.gov/ebc/index.html.

The application is being forwarded to the examiner for action on the merits commensurate with this decision.

/Christopher Grant/

Christopher Grant
Quality Assurance Specialist
Technology Center 2400

UNITED STATES PATENT AND TRADEMARK OFFICE

UNITED STATES DEPARTMENT OF COMMERCE
United States Patent and Trademark Office
Address: COMMISSIONER FOR PATENTS
P.O. Box 1450
Alexandria, Virginia 22313-1450
www.uspto.gov

| APPLICATION NO. | FILING DATE | FIRST NAMED INVENTOR | ATTORNEY DOCKET NO. | CONFIRMATION NO. |
|---|---|---|---|---|
| 12/982,341 | 12/30/2010 | Connie C. WONG | AUXO-001/03US<br>313541-2014 | 8188 |

58249 7590 01/10/2011
COOLEY LLP
ATTN: Patent Group
Suite 1100
777 - 6th Street, NW
WASHINGTON, DC 20001

| EXAMINER |
|---|

| ART UNIT | PAPER NUMBER |
|---|---|
| 1632 | |

| MAIL DATE | DELIVERY MODE |
|---|---|
| 01/10/2011 | PAPER |

**Please find below and/or attached an Office communication concerning this application or proceeding.**

The time period for reply, if any, is set in the attached communication.

UNITED STATES PATENT AND TRADEMARK OFFICE

Commissioner for Patents
United States Patent and Trademark Office
P.O. Box 1450
Alexandria, VA 22313-1450
www.uspto.gov

JAN 1 0 2011

COOLEY LLP
ATTN: Patent Group
Suite 1100
777 - 6th Street, NW
WASHINGTON DC 20001

In re Application of:
Connie C Wong

Serial No.: 12/982,341

Filed: December 30, 2010

Docket No.: **AUXO-001/03US 313541-2014**

Title: **IMAGING AND EVALUATING EMBRYOS, OOCYTES, AND STEM CELLS**

DECISION ON REQUEST FOR CONSIDERATION TO MAKE SPECIAL FOR NEW APPLICATION UNDER 37 C.F.R. § 1.102 & M.P.E.P. § 708.02

This is a decision on the request for reconsideration filed on December 30, 2010 to make the above-identified application special for accelerated examination procedure under 37 C.F.R. § 1.102(d).

The petition to make the application special is GRANTED.

The application is eligible for accelerated examination and the petition complies with the conditions for granting the application special status pursuant to the "Change to Practice for Petitions in Patent Applications to Make Special and for Accelerated Examination" published June 26, 2006, in the Federal Register. (71 Fed. Reg. 36323).

The prosecution of the instant application will be conducted expeditiously according to the following guidelines.

1. The application will be docketed to an examiner and taken up for action within two weeks of the date of this decision.

2. Restriction Practice:
   If the examiner determines that the claims are not directed to a single invention, a telephone request to elect one single invention will be made pursuant to MPEP 812.01. As a prerequisite to the grant of this petition, the applicant has agreed to make an oral election, by telephone, without traverse. If the applicant refuses to make an election

without traverse, or the examiner cannot reach the applicant after a reasonable effort, the examiner will treat the first claimed invention (invention defined by claim 1) as having being constructively elected without traverse for examination.

3. Office action:
   If it is determined that, after appropriate consultation, there is a potential rejection or any other issue to be addressed, the examiner will telephone the applicant and arrange an interview to discuss and resolve the issue. An Office action, other than a Notice of Allowance and Fee(s) Due (Notice of Allowance), will not be issued unless either: 1) an interview was conducted but did not result in agreed to action that places the application in condition for allowance, or, 2) a determination is made that an interview would be unlikely to result in the application being placed in condition for allowance, and 3) an internal conference has been held to review any rejection of any claim.

4. Time for Reply:
   An Office action other than a Notice of Allowance or a final Office action will set a shortened statutory period of one month or thirty days, whichever is longer, for reply with no extension of time available under 37 CFR 1.136(a). Failure to timely file a reply within this non-extendible period for reply will result in the abandonment of the application.

5. Reply by Applicant:
   A timely reply to an Office action other than the Notice of Allowance must be submitted electronically via EFS or EFS-web and limited to addressing the rejections, objections and requirement made. Any amendment that attempts to: 1) add claims which would result in more than three pending independent claims or more than twenty pending total claims; 2) present claims not encompassed by the pre-examination search or an updated accelerated examination support document; or 3) present claims that are directed a non-elected invention or an invention other than that previously claimed and examined in the application, will be treated as not fully responsive and will not be entered.

   For any amendment to the claims (including any new claim) that is not encompassed by the accelerated examination support document, applicant must provide an updated accelerated examination support document that encompasses the amended or new claims at the time of filing of the amendment.

   To proceed expeditiously with the examination, it is recommended that a reply with amendments made to any claim or with any new claim being added be accompanied by an updated accelerated examination support document or a statement explaining how the amended or new claim is supported by the original accelerated examination support document.

6. Information Disclosure Statement (IDS):
7. Any IDS filed during prosecution must be submitted electronically via EFS or EFS-web, accompanied by an updated accelerated examination support document, and be in compliance with 37 CFR 1.97 and 1.98.

8. Post-Allowance Processing:
   To expedite processing of the allowed application into a patent, the applicant must: 1) pay the required fees within one month of the date of the Notice of Allowance, and 2) not file any post allowance papers not required by the Office. In no event may the issue fee be paid and accepted later than three months from the date of the Notice of Allowance.

9. After-Final and Appeal Procedures:
   To expedite prosecution, after receiving the final Office action, applicant must: 1) promptly file a notice of appeal, an appeal brief and appeal fees; and 2) not request a pre-appeal brief conference.

   Any amendment, affidavit or other evidence filed after final Office action must comply with applicable rules and the requirements outlined in numbered paragraphs 5 and 6 above.

   On appeal, the application will proceed according to normal appeal procedures. After appeal, the application will again be treated special.

10. Proceedings Outside the Normal Examination Process:
    If the application becomes involved in a proceeding that is outside the normal examination process (e.g., a secrecy order, national security review, interference proceeding, petitions under 37 CFR 1.181, 182 or 183), the application will be treated special before and after such proceeding.

11. Final Disposition:
    The twelve month goal of this accelerated examination procedure ends with a final disposition. The mailing of a final Office action, a Notice of Allowance, the filing of a Notice of Appeal, or the filing of a Request for Continued Examination (RCE) is the final disposition.

If, during prosecution, a paper is not filed electronically using EFS-web, a reply is filed but is not fully responsive, the application is involved in an appeal, or a proceeding outside normal examination process, the application will still be examined expeditiously, however, the final disposition may occur more than twelve months from the filing of the application.

Any inquiry regarding this decision should be directed to Marianne C. Seidel, Quality Assurance Specialist, at (571) 272-0584.

/MC Seidel/
Marianne C. Seidel, Quality Assurance Specialist
Technology Center 1600

UNITED STATES PATENT AND TRADEMARK OFFICE

UNITED STATES DEPARTMENT OF COMMERCE
United States Patent and Trademark Office
Address: COMMISSIONER FOR PATENTS
P.O. Box 1450
Alexandria, Virginia 22313-1450
www.uspto.gov

| APPLICATION NO. | FILING DATE | FIRST NAMED INVENTOR | ATTORNEY DOCKET NO. | CONFIRMATION NO. |
|---|---|---|---|---|
| 12/982,341 | 12/30/2010 | Connie C. WONG | AUXO-001/03US<br>313541-2014 | 8188 |

58249 7590 01/25/2011
COOLEY LLP
ATTN: Patent Group
Suite 1100
777 - 6th Street, NW
WASHINGTON, DC 20001

| EXAMINER | |
|---|---|
| ART UNIT | PAPER NUMBER |
| 1632 | |

| MAIL DATE | DELIVERY MODE |
|---|---|
| 01/25/2011 | PAPER |

**Please find below and/or attached an Office communication concerning this application or proceeding.**

The time period for reply, if any, is set in the attached communication.

UNITED STATES PATENT AND TRADEMARK OFFICE

Commissioner for Patents
United States Patent and Trademark Office
P.O. Box 1450
Alexandria, VA 22313-1450
www.uspto.gov

JAN 2 5 2011

COOLEY LLP
ATTN: Patent Group
Suite 1100
777 - 6th Street, NW
WASHINGTON DC 20001

In re Application of:
Connie C Wong

Serial No.: 12/982,341

Filed: December 30, 2010

Docket No.: **AUXO-001/03US 313541-2014**

Title: **IMAGING AND EVALUATING EMBRYOS, OOCYTES, AND STEM CELLS**

DECISION ON REQUEST FOR CONSIDERATION TO MAKE SPECIAL FOR NEW APPLICATION UNDER 37 C.F.R. § 1.102 & M.P.E.P. § 708.02

This is a decision on the petition filed on December 30, 2010 to make the above-identified application special for accelerated examination procedure under 37 C.F.R. § 1.102(d). Please note the decision of January 10, 2011 is moot in view of the newly found issue with regard to not meeting a formality.

The petition to make the application special is **DISMISSED**.

REGULATION AND PRACTICE

A grantable petition to make special under 37 C.F.R. § 1.102(d) and pursuant to the "Change to Practice for Petitions in Patent Applications to Make Special and for Accelerated Examination" published in the Federal Register on June 26, 2006 (71 Fed. Reg. 36323), must satisfy the following conditions:

I. Conditions Regarding the Application:

1. the application must be a non-reissue utility or design application filed under 37 CFR 1.111(a);

2. the application, the petition and the required fees must be filed electronically using the USPTO's electronic filing system (EFS), or EFS-web; if not filed electronically, a statement asserting that EFS and EFS-web were not available during the normal business hours.

3. at the time of filing, the application must be complete under 37 CFR 1.51 and in condition for examination;

4. the application must contain three or fewer independent claims and twenty or fewer total claims and the claims must be directed to a single invention.

II. Conditions Regarding the Petition:

The petition must:

1. be filed with the application;
2. include a statement that applicant agrees not to separately argue the patentability of any independent claim during any appeal in the application;
3. include a statement that applicant agrees to make an election without traverse in a telephone interview.
4. include a statement that applicant agrees to conduct such an interview when requested by the examiner.
5. include a statement, made based on a good faith belief, that a preexamination search in compliance with the following requirements, was conducted, including an identification of the filed of search by United States class and subclass, where applicable, and for database searches, the search logic or chemical structure or sequence used as a query, the name of the file(s) searched and the database service, and the date of the search.

The preexamination search must:

5.1 involve U.S. patents and patent application publications, foreign patent documents, and non-patent literature, unless the applicant can justify with reasonable certainty that no references more pertinent than those already identified are likely to be found in the eliminated sources and includes such a justification with this statement;

5.2. be directed to the claimed invention and encompass all of the features of the claims, giving the claims the broadest reasonable interpretation;

5.3. encompass the disclosed features that may be claimed.

6. must provide in support of the petition an accelerated examination support document.

An accelerated examination support document must include:

6.1. an information disclosure statement (IDS) in compliance with 37 CFR 1.98 citing each reference deemed most closely related to the subject matter of each of the claims;

6.2. an identification of all the limitations in the claims that are disclosed by the reference specifying where the limitation is disclosed in the cited reference;

6.3. a detailed explanation of how each of the claims are patentable over the references cited with particularity required by 37 CFR 1.111(b) and (c);

6.4. a concise statement of the utility of the invention as defined in each of the independent claims (unless the application is a design application);

6.5. a showing of where each limitation of the claims finds support under 35 USC 112, first paragraph, in the written description of the specification. If applicable, the showing must also identify: (1) each means- (or step) plus-function claim element that invokes consideration under 35 UDC 112, sixth paragraph; and (2) the structure, material, or acts in the specification that corresponds to each means- (or step) plus-function claim element that invokes consideration under 35 UDC 112, sixth paragraph; if the application claims the benefit of one or more applications under title 35, United States Code, the showing must also include where each limitation of the claims finds support under 35 USC 112, first paragraph, in each such application in which such supports exists;

6.6. an identification of any cited references that may be disqualified under 35 USC 103(c).

Review of Facts

All of the required conditions have not been met. Specifically, the petition fails to comply with the rules that require that if a Preliminary Amendment is submitted with the application as filed, we have to have a substitute specification. While it can be examined and has special status, the problem is that it is not in condition for publication. The applicant will have to submit the substitue specification. Therefore, the petition fails to meet the required conditions to be accorded special status under the accelerated examination procedure.

Decision

For the above-stated reasons, the petition is dismissed. The application will therefore be taken up by the examiner for action in its regular turn.

Petitioner is given a single opportunity to perfect the petition. Any request for reconsideration of this decision must be submitted within 1 (one) month or 30 (thirty) days, whichever is longer, (no extension of time under 37 CFR 1.136(a)) from the date of this decision in order to be considered timely. Any request for reconsideration must address the deficiencies indicated above.

Petitioner is reminded that, upon granting of the special status of the application on request for reconsideration, the application will be processed expeditiously. However, due to the dismissal of the instant petition, examination may not be completed within twelve months of the filing date of the application.

Any inquiry regarding this decision should be directed to Marianne C. Seidel, Quality Assurance Specialist, at (571) 272-0584.

/MC Seidel/
Marianne C. Seidel, Quality Assurance Specialist
Technology Center 1600

UNITED STATES PATENT AND TRADEMARK OFFICE

UNITED STATES DEPARTMENT OF COMMERCE
United States Patent and Trademark Office
Address: COMMISSIONER FOR PATENTS
P.O. Box 1450
Alexandria, Virginia 22313-1450
www.uspto.gov

| APPLICATION NO. | FILING DATE | FIRST NAMED INVENTOR | ATTORNEY DOCKET NO. | CONFIRMATION NO. |
|---|---|---|---|---|
| 12/982,341 | 12/30/2010 | Connie C. WONG | AUXO-001/03US<br>313541-2014 | 8188 |

58249 7590 02/03/2011
COOLEY LLP
ATTN: Patent Group
Suite 1100
777 - 6th Street, NW
WASHINGTON, DC 20001

| EXAMINER |
|---|

| ART UNIT | PAPER NUMBER |
|---|---|
| 1632 | |

| MAIL DATE | DELIVERY MODE |
|---|---|
| 02/03/2011 | PAPER |

**Please find below and/or attached an Office communication concerning this application or proceeding.**

The time period for reply, if any, is set in the attached communication.

UNITED STATES PATENT AND TRADEMARK OFFICE

Commissioner for Patents
United States Patent and Trademark Office
P.O. Box 1450
Alexandria, VA 22313-1450
www.uspto.gov

FEB 0 3 2011

COOLEY LLP
ATTN: Patent Group
Suite 1100
777 - 6th Street, NW
WASHINGTON DC 20001

In re Application of:
Connie C Wong

Serial No.: 12/982,341

Filed: December 30, 2010

Docket No.: **AUXO-001/03US 313541-2014**

Title: **IMAGING AND EVALUATING EMBRYOS, OOCYTES, AND STEM CELLS**

DECISION ON REQUEST FOR CONSIDERATION TO MAKE SPECIAL FOR NEW APPLICATION UNDER 37 C.F.R. § 1.102 & M.P.E.P. § 708.02

This is a decision on the petition filed on December 30, 20010 to make the above-identified application special for accelerated examination procedure under 37 C.F.R. § 1.102(d). Please note the decision of January 25, 2011 is moot in view of the entry of the substitute specification filed January 25, 2011.

The petition to make the application special is now GRANTED.

The application is eligible for accelerated examination and the petition complies with the conditions for granting the application special status pursuant to the "Change to Practice for Petitions in Patent Applications to Make Special and for Accelerated Examination" published June 26, 2006, in the Federal Register. (71 Fed. Reg. 36323).

The prosecution of the instant application will be conducted expeditiously according to the following guidelines.

1. The application will be docketed to an examiner and taken up for action within two weeks of the date of this decision.

2. Restriction Practice:
   If the examiner determines that the claims are not directed to a single invention, a telephone request to elect one single invention will be made pursuant to MPEP 812.01. As a prerequisite to the grant of this petition, the applicant has agreed to make an oral

election, by telephone, without traverse. If the applicant refuses to make an election without traverse, or the examiner cannot reach the applicant after a reasonable effort, the examiner will treat the first claimed invention (invention defined by claim 1) as having being constructively elected without traverse for examination.

3. Office action:
   If it is determined that, after appropriate consultation, there is a potential rejection or any other issue to be addressed, the examiner will telephone the applicant and arrange an interview to discuss and resolve the issue. An Office action, other than a Notice of Allowance and Fee(s) Due (Notice of Allowance), will not be issued unless either: 1) an interview was conducted but did not result in agreed to action that places the application in condition for allowance, or, 2) a determination is made that an interview would be unlikely to result in the application being placed in condition for allowance, and 3) an internal conference has been held to review any rejection of any claim.

4. Time for Reply:
   An Office action other than a Notice of Allowance or a final Office action will set a shortened statutory period of one month or thirty days, whichever is longer, for reply with no extension of time available under 37 CFR 1.136(a). Failure to timely file a reply within this non-extendible period for reply will result in the abandonment of the application.

5. Reply by Applicant:
   A timely reply to an Office action other than the Notice of Allowance must be submitted electronically via EFS or EFS-web and limited to addressing the rejections, objections and requirement made. Any amendment that attempts to: 1) add claims which would result in more than three pending independent claims or more than twenty pending total claims; 2) present claims not encompassed by the pre-examination search or an updated accelerated examination support document; or 3) present claims that are directed a non-elected invention or an invention other than that previously claimed and examined in the application, will be treated as not fully responsive and will not be entered.

   For any amendment to the claims (including any new claim) that is not encompassed by the accelerated examination support document, applicant must provide an updated accelerated examination support document that encompasses the amended or new claims at the time of filing of the amendment.

   To proceed expeditiously with the examination, it is recommended that a reply with amendments made to any claim or with any new claim being added be accompanied by an updated accelerated examination support document or a statement explaining how the amended or new claim is supported by the original accelerated examination support document.

6. Information Disclosure Statement (IDS):

7. Any IDS filed during prosecution must be submitted electronically via EFS or EFS-web, accompanied by an updated accelerated examination support document, and be in compliance with 37 CFR 1.97 and 1.98.

8. Post-Allowance Processing:
   To expedite processing of the allowed application into a patent, the applicant must: 1) pay the required fees within one month of the date of the Notice of Allowance, and 2) not file any post allowance papers not required by the Office. In no event may the issue fee be paid and accepted later than three months from the date of the Notice of Allowance.

9. After-Final and Appeal Procedures:
   To expedite prosecution, after receiving the final Office action, applicant must: 1) promptly file a notice of appeal, an appeal brief and appeal fees; and 2) not request a pre-appeal brief conference.

   Any amendment, affidavit or other evidence filed after final Office action must comply with applicable rules and the requirements outlined in numbered paragraphs 5 and 6 above.

   On appeal, the application will proceed according to normal appeal procedures. After appeal, the application will again be treated special.

10. Proceedings Outside the Normal Examination Process:
    If the application becomes involved in a proceeding that is outside the normal examination process (e.g., a secrecy order, national security review, interference proceeding, petitions under 37 CFR 1.181, 182 or 183), the application will be treated special before and after such proceeding.

11. Final Disposition:
    The twelve month goal of this accelerated examination procedure ends with a final disposition. The mailing of a final Office action, a Notice of Allowance, the filing of a Notice of Appeal, or the filing of a Request for Continued Examination (RCE) is the final disposition.

If, during prosecution, a paper is not filed electronically using EFS-web, a reply is filed but is not fully responsive, the application is involved in an appeal, or a proceeding outside normal examination process, the application will still be examined expeditiously, however, the final disposition may occur more than twelve months from the filing of the application.

Any inquiry regarding this decision should be directed to Marianne C. Seidel, Quality Assurance Specialist, at (571) 272-0584.

/MC Seidel/
Marianne C. Seidel, Quality Assurance Specialist
Technology Center 1600

Best Available Copy

# UNITED STATES PATENT AND TRADEMARK OFFICE

UNITED STATES DEPARTMENT OF COMMERCE
United States Patent and Trademark Office
Address: COMMISSIONER FOR PATENTS
P.O. Box 1450
Alexandria, Virginia 22313-1450
www.uspto.gov

| APPLICATION NO. | FILING DATE | FIRST NAMED INVENTOR | ATTORNEY DOCKET NO. | CONFIRMATION NO. |
|---|---|---|---|---|
| 12/982,384 | 12/30/2010 | Li Zhongfeng | HW 0910300AE | 8269 |

74365 7590 03/07/2011
Slater & Matsil, L.L.P.
17950 Preston Road, Suite 1000
Dallas, TX 75252

| EXAMINER |
|---|
| PHAM, CHI H |

| ART UNIT | PAPER NUMBER |
|---|---|
| 2471 | |

| NOTIFICATION DATE | DELIVERY MODE |
|---|---|
| 03/07/2011 | ELECTRONIC |

**Please find below and/or attached an Office communication concerning this application or proceeding.**

The time period for reply, if any, is set in the attached communication.

Notice of the Office communication was sent electronically on above-indicated "Notification Date" to the following e-mail address(es):

docketing@slater-matsil.com

UNITED STATES PATENT AND TRADEMARK OFFICE

Commissioner for Patents
United States Patent and Trademark Office
P.O. Box 1450
Alexandria, VA 22313-1450
www.uspto.gov

MAILED

MAR 04 2011

DIRECTOR OFFICE
TECHNOLOGY CENTER 2400

Slater & Matsil, L.L.P.
17950 Preston Road, Suite 1000
Dallas TX 75252

In re Application of:
ZHONGFENG, LI et al.
Serial No.: 12/982,384
Filed: December 30, 2010
Docket Number: HW 0910300AE
Title: RELAY TRANSMISSION METHOD AND APPARATUS

DECISION ON PETITION TO MAKE SPECIAL FOR NEW APPLICATION UNDER 37 C.F.R. § 1.102

This is a decision on the petition filed on December 30, 2010, to make the above-identified application special for accelerated examination procedure in accordance with 37 C.F.R. § 1.102(c)(2).

The petition to make the application special is GRANTED.

The application is eligible for accelerated examination and the petition complies with the conditions for granting the application special status pursuant to M.P.E.P. §708.02(a) and to the "Change to Practice for Petitions in Patent Applications to Make Special and for Accelerated Examination" published June 26, 2006, in the Federal Register. (71 Fed. Reg. 36323).

The prosecution of the instant application will be conducted expeditiously according to the following guidelines.

1. The application will be docketed to an examiner and taken up for action within two weeks of the date of this decision.

2. Restriction Practice:
   If the examiner determines that the claims are not directed to a single invention, a telephone request to elect one single invention will be made pursuant to M.P.E.P. §812.01. As a prerequisite to the grant of this petition, the applicant has agreed to make an oral election, by telephone, without traverse. If the applicant refuses to make an election without traverse, or the examiner cannot reach the applicant after a reasonable effort, the examiner will treat the first claimed invention (invention defined by claim 1) as having being constructively elected without traverse for examination.

3. Office action:
   If it is determined that, after appropriate consultation, there is a potential rejection or any other issue to be addressed, the examiner will telephone the applicant and arrange an interview to discuss and resolve the issue. An Office action, other than a Notice of Allowance and Fee(s) Due (Notice of Allowance), will not be issued unless either: 1) an interview was conducted but did not result in agreed to action that places the application in condition for allowance, or, 2) a determination is made that an interview would be unlikely to result in the application being placed in condition for allowance, and 3) an internal conference has been held to review any rejection of any claim.

4. Time for Reply:
   An Office action other than a Notice of Allowance or a final Office action will set a shortened statutory period of one month or thirty days, whichever is longer, for reply with no extension of time available under 37 C.F.R. §1.136(a). Failure to timely file a reply within this non-extendible period for reply will result in the abandonment of the application.

5. Reply by Applicant:
   A timely reply to an Office action other than the Notice of Allowance must be submitted electronically via EFS or EFS-web and limited to addressing the rejections, objections and requirement made. Any amendment that attempts to: 1) add claims which would result in more than three pending independent claims or more than twenty pending total claims; 2) present claims not encompassed by the pre-examination search or an updated accelerated examination support document; or 3) present claims that are directed a non-elected invention or an invention other than that previously claimed and examined in the application, will be treated as not fully responsive and will not be entered.

   For any amendment to the claims (including any new claim) that is not encompassed by the accelerated examination support document, applicant must provide an updated accelerated examination support document that encompasses the amended or new claims at the time of filing of the amendment.

   To proceed expeditiously with the examination, it is recommended that a reply with amendments made to any claim or with any new claim being added be accompanied by an updated accelerated examination support document or a statement explaining how the amended or new claim is supported by the original accelerated examination support document.

6. Information Disclosure Statement (IDS):
   Any IDS filed during prosecution must be submitted electronically via EFS or EFS-web, accompanied by an updated accelerated examination support document, and be in compliance with 37 C.F.R. §1.97 and §1.98.

7. Post-Allowance Processing:
   To expedite processing of the allowed application into a patent, the applicant must: 1) pay the required fees within one month of the date of the Notice of Allowance, and 2) not

file any post allowance papers not required by the Office. In no event may the issue fee be paid and accepted later than three months from the date of the Notice of Allowance.

8. After-Final and Appeal Procedures:
   To expedite prosecution, after receiving the final Office action, applicant must: 1) promptly file a notice of appeal, an appeal brief and appeal fees; and 2) not request a pre-appeal brief conference.

   Any amendment, affidavit or other evidence filed after final Office action must comply with applicable rules and the requirements outlined in numbered paragraphs 5 and 6 above.

   On appeal, the application will proceed according to normal appeal procedures. After appeal, the application will again be treated special.

9. Proceedings Outside the Normal Examination Process:
   If the application becomes involved in a proceeding that is outside the normal examination process (e.g., a secrecy order, national security review, interference proceeding, petitions under 37 C.F.R. §1.181, §1.182 or §1.183), the application will be treated special before and after such proceeding.

10. Final Disposition:
    The twelve-month goal of this accelerated examination procedure ends with a final disposition. The mailing of a final Office action, a Notice of Allowance, the filing of a Notice of Appeal, or the filing of a Request for Continued Examination (RCE) is the final disposition. However, the application retains its special status after the filing of an RCE.

If, during prosecution, a paper is not filed electronically using EFS-web, a reply is filed but is not fully responsive, the application is involved in an appeal or a proceeding outside normal examination process, the application will still be examined expeditiously, however, the final disposition may occur more than twelve months from the filing of the application.

Any inquiry regarding this decision should be directed to the undersigned at (571) 272-3126.

/Chau Nguyen/

Chau T. Nguyen
Quality Assurance Specialist
Technology Center 2400
Network, Multiplexing, Cable and Security

UNITED STATES PATENT AND TRADEMARK OFFICE

Commissioner for Patents
United States Patent and Trademark Office
P.O. Box 1450
Alexandria, VA 22313-1450
www.uspto.gov

**MARSH, FISCHMANN & BREYFOGLE LLP**
**8055 East Tufts Avenue**
**Suite 450**
**Denver CO 80237**

**MAILED**

AUG 10 2011

**OFFICE OF PETITIONS**

| | | |
|---|---|---|
| In re Application of | : | |
| Keith Elder et al. | : | |
| Application No. 12/982,416 | : | DECISION ON PETITION |
| Filed: December 30, 2010 | : | TO MAKE SPECIAL UNDER |
| Attorney Docket No. 50299-00017 | : | 37 CFR 1.102(c)(1) |
| | : | |

This is a decision on the petition under 37 CFR 1.102(c)(1), filed July 26, 2011, to make the above-identified application special based on applicant's age as set forth in M.P.E.P. § 708.02, Section IV.

The petition is **GRANTED**.

A grantable petition to make an application special under 37 CFR 1.102(c)(1) and MPEP § 708.02, Section IV: Applicant's Age must be accompanied by evidence showing that at least one of the applicants is 65 years of age, or more, such as a birth certificate or a statement by applicant. No fee is required

The instant petition includes a statement by an attorney on behalf of inventor Douglas B. Crice, attesting to his/her age. The above-identified application has been accorded "special" status.

Telephone inquiries concerning this decision should be directed to Kimberly Inabinet at 571-272-4618.

All other inquiries concerning either the examination or status of the application should be directed to the Technology Center.

The application is being forwarded to the Technology Center Art Unit 3663 for action on the merits commensurate with this decision.

/Kimberly Inabinet/

Kimberly Inabinet
Petitions Examiner
Office of Petitions

UNITED STATES PATENT AND TRADEMARK OFFICE

Commissioner for Patents
United States Patent and Trademark Office
P.O. Box 1450
Alexandria, VA 22313-1450
www.uspto.gov

POLSINELLI SHUGHART PC
700 W. 47TH STREET
SUITE 1000
KANSAS CITY MO 64112-1802

MAILED
JUN 13 2011
OFFICE OF PETITIONS

In re Application of
Douglas Elliott et al.
Application No. 12/982,513
Filed: December 30, 2010
Attorney Docket No. **057293-422134**

: DECISION ACCORDING STATUS
: UNDER 37 CFR 1.47(a)

This is in response to the petition filed May 10, 2011 under 37 CFR 1.47(a).

The petition is **DISMISSED**.

The above-identified application was filed without an executed Oath or Declaration. Accordingly, on January 19, 2011, a "Notice To File Missing Parts of Application" was mailed, requiring *inter alia* a properly executed oath or declaration and surcharge for its late filing.

In response, an oath or declaration signed by all joint inventors except Kevin Bertel and Michael Skolones, the instant petition under 37 CFR 1.47(a), a two month extension of time and a surcharge for the late filing of the Oath was filed. Petitioner argues that joint inventors Kevin Bertel and Michael Skolones refuse to sign the oath or declaration and thus by their actions, to cooperate with the filing of the instant application.

A grantable petition under 37 CFR 1.47(a) requires: (1) proof that the non-signing inventor cannot be reached or refuses to sign the oath or declaration after having been presented with the application papers (specification, claims and drawings); (2) an acceptable oath or declaration in compliance with 35 U.S.C. §§ 115 and 116; (3) the petition fee; and (4) a statement of the last known address of the non-signing inventor.

The petition lacks item (1). In regards to item (1), petitioners have not submitted sufficient evidence to prove that a copy of the application was sent or given to the non-signing inventors. The evidence only indicates that First Class Mail requesting execution of a declaration was sent on March 28,2011 to inventors Kevin Bertel and Michael Skolones at their respective last known addresses.

Petitioners must show proof that a copy of the Application (specification including claims, drawings, if any) and the Declaration were sent or given to the non-signing inventor for review.[1] Petitioners should provide a copy of the cover letter transmitting the application papers to the non-signing inventor or details given in an affidavit or declaration of facts by a person having first hand knowledge of the details.

Petitioners must also present proof that if after having received the complete application, the non-signing inventor refuses to sign the declaration. If there is a written refusal, a copy of the written refusal should be submitted with any renewed petition. If the refusal was made orally to a person, then that person must provide details of the refusal in an affidavit or declaration of facts.

Status under 37 CFR 1.47(a) cannot be accorded this application until such time as the deficiencies have been cured.

Further correspondence with respect to this matter should be addressed as follows:

By mail: Mail Stop Petitions
Commissioner for Patents
P.O. Box 1450
Alexandria, VA 22313-1450

By FAX: (571) 273-8300
Office of Petitions

Telephone inquiries concerning this matter may be directed to the undersigned Petitions Attorney at (571) 272-3212.

Patricia Faison-Ball

Patricia Faison-Ball
Senior Petitions Attorney
Office of Petitions

[1] MPEP 409.03(d).

UNITED STATES PATENT AND TRADEMARK OFFICE

Commissioner for Patents
United States Patent and Trademark Office
P.O. Box 1450
Alexandria, VA 22313-1450
www.uspto.gov

POLSINELLI SHUGHART PC
700 W. 47TH STREET
SUITE 1000
KANSAS CITY MO 64112-1802

MAILED
JUL 22 2011
OFFICE OF PETITIONS

In re Application of :
Douglas Elliott et al. :
Application No. 12/982,513 : DECISION ACCORDING STATUS
Filed: December 30, 2010 : UNDER 37 CFR 1.47(a)
Attorney Docket No. **057293-422134** :

This is in response to the renewed petition filed July 11, 2011 under 37 CFR 1.47(a)[1].

The petition is **GRANTED**.

The above-identified application was filed without an executed Oath or Declaration. Accordingly, on January 19, 2011, a "Notice To File Missing Parts of Application" was mailed, requiring *inter alia* a properly executed oath or declaration and surcharge for its late filing. In response, on May 13, 2011, an oath or declaration signed by all joint inventors except Kevin Bertel and Michael Skolones, a petition under 37 CFR 1.47(a), a two month extension of time and a surcharge for the late filing of the Oath was filed. Petitioner argued that joint inventors Kevin Bertel and Michael Skolones refused to sign the oath or declaration and thus by their actions, to cooperate with the filing of the instant application. The petition was dismissed in a decision mailed June 10, 2011 because petitioners had not submitted sufficient evidence to prove that a copy of the application was sent or given to the non-signing inventors The evidence only indicated that that First Class Mail requesting execution of a declaration was sent on March 28,2011 to inventors Kevin Bertel and Michael Skolones at their respective last known addresses.

Comes now petitioner with proof that a copy of the complete application was sent to the last known addresses for Kevin Bertel and Michael Skolones and that to date, they have not returned an executed oath or declaration.

The above-identified application and papers have been reviewed and found in

[1]A grantable petition under 37 CFR 1.47(a) requires: (1) proof that the non-signing inventor cannot be reached or refuses to sign the oath or declaration after having been presented with the application papers (specification, claims and drawings); (2) an acceptable oath or declaration in compliance with 35 U.S.C. §§ 115 and 116; (3) the petition fee; and (4) a statement of the last known address of the non-signing inventor.

compliance with 37 CFR 1.47(a). In view thereof, this application is hereby accorded Rule 1.47(a) status.

Thus, as provided in Rule 1.47c, this Office will forward notice of this application's filing to the non-signing inventors at the addresses given in the petition. Notice of the filing of this application will also be published in the Official Gazette.

This matter will be referred to the Office of Patent Application Processing for further pre-examination processing.

Telephone inquiries concerning this matter may be directed to the undersigned Petitions Attorney at (571) 272-3212.

Patricia Faison-Ball
Senior Petitions Attorney
Office of Petitions

# UNITED STATES PATENT AND TRADEMARK OFFICE

UNITED STATES DEPARTMENT OF COMMERCE
United States Patent and Trademark Office
Address: COMMISSIONER FOR PATENTS
P.O. Box 1450
Alexandria, Virginia 22313-1450
www.uspto.gov

| APPLICATION NO. | FILING DATE | FIRST NAMED INVENTOR | ATTORNEY DOCKET NO. | CONFIRMATION NO. |
|---|---|---|---|---|
| 12/982,655 | 12/30/2010 | Bingyu Qu | HW707370 | 8789 |

77399 7590 04/04/2011
Leydig, Voit & Mayer, Ltd
(for Huawei Technologies Co., Ltd)
Two Prudential Plaza Suite 4900
180 North Stetson Avenue
Chicago, IL 60601

| EXAMINER |
|---|
| JAIN, RAJ K |

| ART UNIT | PAPER NUMBER |
|---|---|
| 2472 | |

| NOTIFICATION DATE | DELIVERY MODE |
|---|---|
| 04/04/2011 | ELECTRONIC |

**Please find below and/or attached an Office communication concerning this application or proceeding.**

The time period for reply, if any, is set in the attached communication.

Notice of the Office communication was sent electronically on above-indicated "Notification Date" to the following e-mail address(es):

Chgpatent@leydig.com
uspatent@huawei.com

UNITED STATES PATENT AND TRADEMARK OFFICE

Commissioner for Patents
United States Patent and Trademark Office
P.O. Box 1450
Alexandria, VA 22313-1450
www.uspto.gov

**MAILED**

APR 04 2011

DIRECTOR OFFICE
TECHNOLOGY CENTER 2400

Leydig, Voit & Mayer, Ltd
(for Huawei Technologies Co., Ltd)
Two Prudential Plaza Suite 4900
180 North Stetson Avenue
Chicago IL 60601

In re Application of:
QU, BINGYU et al.
Serial No.: 12/982,655
Filed: December 30, 2010
Docket Number: HW707370
Title: METHOD AND APPARATUS FOR SEQUENCE DISTRIBUTING AND SEQUENCE PROCESSING IN COMMUNICATION SYSTEM

DECISION ON PETITION TO MAKE SPECIAL FOR NEW APPLICATION UNDER 37 C.F.R. § 1.102

This is a decision on the petition filed on December 30, 2010, to make the above-identified application special for accelerated examination procedure in accordance with 37 C.F.R. § 1.102(c)(2).

The petition to make the application special is GRANTED.

The application is eligible for accelerated examination and the petition complies with the conditions for granting the application special status pursuant to M.P.E.P. §708.02(a) and to the "Change to Practice for Petitions in Patent Applications to Make Special and for Accelerated Examination" published June 26, 2006, in the Federal Register. (71 Fed. Reg. 36323).

The prosecution of the instant application will be conducted expeditiously according to the following guidelines.

1. The application will be docketed to an examiner and taken up for action within two weeks of the date of this decision.

2. Restriction Practice:
   If the examiner determines that the claims are not directed to a single invention, a telephone request to elect one single invention will be made pursuant to M.P.E.P. §812.01. As a prerequisite to the grant of this petition, the applicant has agreed to make an oral election, by telephone, without traverse. If the applicant refuses to make an

election without traverse, or the examiner cannot reach the applicant after a reasonable effort, the examiner will treat the first claimed invention (invention defined by claim 1) as having being constructively elected without traverse for examination.

3. Office action:
If it is determined that, after appropriate consultation, there is a potential rejection or any other issue to be addressed, the examiner will telephone the applicant and arrange an interview to discuss and resolve the issue. An Office action, other than a Notice of Allowance and Fee(s) Due (Notice of Allowance), will not be issued unless either: 1) an interview was conducted but did not result in agreed to action that places the application in condition for allowance, or, 2) a determination is made that an interview would be unlikely to result in the application being placed in condition for allowance, and 3) an internal conference has been held to review any rejection of any claim.

4. Time for Reply:
An Office action other than a Notice of Allowance or a final Office action will set a shortened statutory period of one month or thirty days, whichever is longer, for reply with no extension of time available under 37 C.F.R. §1.136(a). Failure to timely file a reply within this non-extendible period for reply will result in the abandonment of the application.

5. Reply by Applicant:
A timely reply to an Office action other than the Notice of Allowance must be submitted electronically via EFS or EFS-web and limited to addressing the rejections, objections and requirement made. Any amendment that attempts to: 1) add claims which would result in more than three pending independent claims or more than twenty pending total claims; 2) present claims not encompassed by the pre-examination search or an updated accelerated examination support document; or 3) present claims that are directed a non-elected invention or an invention other than that previously claimed and examined in the application, will be treated as not fully responsive and will not be entered.

   For any amendment to the claims (including any new claim) that is not encompassed by the accelerated examination support document, applicant must provide an updated accelerated examination support document that encompasses the amended or new claims at the time of filing of the amendment.

   To proceed expeditiously with the examination, it is recommended that a reply with amendments made to any claim or with any new claim being added be accompanied by an updated accelerated examination support document or a statement explaining how the amended or new claim is supported by the original accelerated examination support document.

6. Information Disclosure Statement (IDS):
Any IDS filed during prosecution must be submitted electronically via EFS or EFS-web, accompanied by an updated accelerated examination support document, and be in compliance with 37 C.F.R. §1.97 and §1.98.

7. Post-Allowance Processing:
   To expedite processing of the allowed application into a patent, the applicant must: 1) pay the required fees within one month of the date of the Notice of Allowance, and 2) not file any post allowance papers not required by the Office. In no event may the issue fee be paid and accepted later than three months from the date of the Notice of Allowance.

8. After-Final and Appeal Procedures:
   To expedite prosecution, after receiving the final Office action, applicant must: 1) promptly file a notice of appeal, an appeal brief and appeal fees; and 2) not request a pre-appeal brief conference.

   Any amendment, affidavit or other evidence filed after final Office action must comply with applicable rules and the requirements outlined in numbered paragraphs 5 and 6 above.

   On appeal, the application will proceed according to normal appeal procedures. After appeal, the application will again be treated special.

9. Proceedings Outside the Normal Examination Process:
   If the application becomes involved in a proceeding that is outside the normal examination process (e.g., a secrecy order, national security review, interference proceeding, petitions under 37 C.F.R. §1.181, §1.182 or §1.183), the application will be treated special before and after such proceeding.

10. Final Disposition:
    The twelve-month goal of this accelerated examination procedure ends with a final disposition. The mailing of a final Office action, a Notice of Allowance, the filing of a Notice of Appeal, or the filing of a Request for Continued Examination (RCE) is the final disposition. However, the application retains its special status after the filing of an RCE.

If, during prosecution, a paper is not filed electronically using EFS-web, a reply is filed but is not fully responsive, the application is involved in an appeal or a proceeding outside normal examination process, the application will still be examined expeditiously, however, the final disposition may occur more than twelve months from the filing of the application.

Any inquiry regarding this decision should be directed to the undersigned at (571) 272-3126.

/Chau Nguyen/

Chau T. Nguyen
Quality Assurance Specialist
Technology Center 2400
Network, Multiplexing, Cable and Security

**Doc Code: PET.GREEN**
**Document Description: Petition for Green Tech Pilot**

PTO/SB/420 (11-10)
Approved for use through 01/31/2011. OMB 0651-0062
U.S. Patent and Trademark Office; U. S. DEPARTMENT OF COMMERCE
Under the Paperwork Reduction Act of 1995, no persons are required to respond to a collection of information unless it displays a valid OMB control number.

# PETITION TO MAKE SPECIAL UNDER THE GREEN TECHNOLOGY PILOT PROGRAM

| | | |
|---|---|---|
| Attorney Docket Number: PGI-101 | Application Number (if known): 12/982,669 | Filing date: December 30, 2010 |
| First Named Inventor: Eros G.Kaw | | |
| Title: Floating Bioreactor System | | |

**APPLICANT HEREBY REQUESTS TO PARTICIPATE IN THE GREEN TECHNOLOGY PILOT PROGRAM FOR THE ABOVE-IDENTIFIED APPLICATION. See Instruction Sheet on page 2.**

This petition must be timely filed electronically using the USPTO electronic filing system, EFS-Web.

1. By filing this petition:

   **Applicant is requesting early publication: Applicant hereby requests early publication under 37 CFR 1.219 and the publication fee set forth in 37 CFR 1.18(d) accompanies this request.**

2. By filing this petition: applicant is agreeing to make an election without traverse in a telephonic interview and elect an invention that meets the eligibility requirements for the Green Technology Pilot Program, if the Office determines that the claims are not obviously directed to a single invention. See Instruction Sheet.

3. This request is accompanied by statements of special status for the eligibility requirement.

4. The application contains no more than three (3) independent claims and twenty (20) total claims.

5. The application does not contain any multiple dependent claims.

6. Other attachments: _____

| | |
|---|---|
| Signature /Ray K. Shahani/ | Date Dec. 30, 2010 |
| Name (Print/Typed) Ray K. Shahani, Esq. | Registration Number 37,554 |

***Note:*** *Signatures of all the inventors or assignees of record of the entire interest or their representative(s) are required in accordance with 37 CFR 1.33 and 11.18. Please see 37 CFR 1.4(d) for the form of the signature. If necessary, submit multiple forms for more than one signature see below*.*

☐ *Total of 1 forms are submitted.

The information is required to obtain or retain a benefit by the public which is to file (and by the USPTO to process) an application. Confidentiality is governed by 35 U.S.C. 122 and 37 CFR 1.11 and 1.14. This collection is estimated to take 12 hours to complete, including gathering, preparing, and submitting the completed application form to the USPTO. Time will vary depending upon the individual case. Any comments on the amount of time you require to complete this form and/or suggestions for reducing this burden, should be sent to the Chief Information Officer, U.S. Patent and Trademark Office, U.S. Department of Commerce, P.O. Box 1450, Alexandria, VA 22313-1450. DO NOT SEND FEES OR COMPLETED FORMS TO THIS ADDRESS. **SEND TO: Commissioner for Patents, P.O. Box 1450, Alexandria, VA 22313-1450.**

*If you need assistance in completing the form, call 1-800-PTO-9199 and select option 2.*

*RAY K. SHAHANI*
*ATTORNEY AT LAW*

*Registered Patent Attorney - Technology and Intellectual Property Matters*
*http://www.attycubed.com*

*Twin Oaks Office Plaza*
*477 Ninth Avenue, Suite 112*
*San Mateo, California 94402-1854*

*Telephone: (650) 348-1444*
*Facsimile: (650) 348-8655*
*e-mail: rks@attycubed.com*

**IN THE UNITED STATES PATENT AND TRADEMARK OFFICE**

| | | |
|---|---|---|
| In re Application of: KAW | ) | **STATEMENT OF SPECIAL STATUS FOR ELIGIBILITY REQUIREMENT** |
| Serial No.: 12/982,669 | ) | |
| Filing Date: December 30, 2010 | ) | Date Transmitted: December 31, 2010 |
| Attorney Docket No.: PGI-101 | ) | Examiner: |
| Title: FLOATING BIOREACTOR SYSTEM | ) | Group Art Unit: |

Commissioner for Patents
P.O. Box 1450
Alexandria, Virginia 22313-1450

**STATEMENT OF SPECIAL STATUS FOR ELIGIBILITY REQUIREMENT**

Dear Sir:

Applicants submit the titled Statement in support of the PETITION TO MAKE SPECIAL UNDER THE GREEN TECHNOLOGY PILOT PROGRAM.

///

STATEMENT OF SPECIAL STATUS FOR THE ELIGIBILITY REQUIREMENT

Applicants state the followings:

1. The titled invention disclosed in Application No. 12/982,669, entitled "FLOATING BIOREACTOR SYSTEM" filed December 30, 2010, teaches a technology pertaining to environmental quality; Applicants submit the titled invention materially enhances the quality of the environment under the conditions specified in item V of MPEP Sec. 708.02 and is therefore eligible for participation in the Green Technology Pilot Program.

2. The special status is sought because the titled invention materially enhances the quality of the environment by contributing to the cleaning of water resources and maintenance of water resources such as lakes, ponds, rivers, creeks, open water, a basic life-sustaining natural element, also by reducing bio-hazard, disease in water resources as shown below:

(i) The titled invention teaches a bioreactor that possesses exceptional cleaning and aeration ability, the floating bioreactor system " ... *an apparatus for aerating and circulating a liquid medium and at the same time an apparatus for the continuous microbial bio-remediation of organic waste in rivers, sewers and other waste laden environments utilizing in-situ microbial seeding.*" (See Application at page 5 lines 2-4).

(ii) "*.....a microbe bio-reactor designed to work in open water such as lakes and ponds and in lagoons and tanks to clean up water biologically.* " (See Application ast page 5 lines 6-7).

(iii) "*As the water is pulled down under the tank or water body, it pulls down not only microbes but increases dissolved oxygen such that microbial growth at the bottom of the tank or water body is greatly enhanced. Thus, water is cleaned and revived.* " (See Application ast page 6 lines 1-3).

(iv) "*Another object of the present invention is that the biosafety level one microbes*

*can inhabit the micropores in the rocks and river beds of the streams and keep on improving even after the bioreactor is disengaged although the effect is much better to leave it in place.* (See Application ast page 6 lines 15-17).

(v) *"biosolids and/or sludge handling is eliminated. The biosolids are eaten up and consumed by the microbes, thus eliminating the need for sludge and biosolids handling equipment, disposal, ....."* (See Application ast page 6 lines 7-9).

3. The special status is sought because the titled invention materially enhances the quality of the environment by contributing to the cleaning of atmosphere by reduction of greenhouse gases, as shown below:

(i) The titled invention teaches a bioreactor that possesses exceptional cleaning and aeration ability, the floating bioreactor system " ... *the process removes hydrogen sulfide present in the contaminated water or other liquid medium. The process also reduces methane, a green house gas, formation to help preserve the environment.*" (See Application at page 6 lines 3-5).

4. The special status is sought because the titled invention materially enhances the quality of the environment by using microbes or enzymes, as shown below:

(i) The titled invention teaches a bioreactor that possesses exceptional cleaning and aeration ability, the floating bioreactor system "*.....it circulate the microbe with the dirty water. This feeds the microbes imbedded in the media and this causes the microbes to replicate and thus releasing billions of microbes every second. As the microbes are release upward it is oxygenated greatly by the main hose diffusers and this causes the microbes to multiply even much more.*" (See Application at page 5 lines 13-16).

5. The titled invention belongs to the eligible classifications, Class D. Environmental Purification, Protection, or Remediation, Sub-class 10. Bio-hazard, Disease (permanent containment of malicious virus, bacteria, prion) (USPC 588/249-249.5); In water (USPC 210/600-808; 405/60); In

atmostphere (USPC 95/57-81, 149-240); Recovery of excess process materials or regeneration from waste stream (USPC 162/29, 189-191; 164/5; 521/40-49.8; 562/513); Using microbes or enzymes (USPC 435/262.5).

6. Application No. 12/982,669 filed December 30, 2010 is a non-reissue, non-provisional utility application filed under 35 U.S.C. 111(a).

7. The application contains three or fewer independent claims and twenty or fewer total claims and no multiple dependent claims. The application is directed to a single invention that materially enhances the quality of the environment as previously stated.

8. If the USPTO determines that the claims are directed to multiple inventions (e.g., in a restriction requirement), Applicant agrees to make an election without traverse in a telephonic interview, and elect an invention that meets the eligibility requirements in section II or III of the notice cited above and is classified in one of the U.S. classifications listed in section VI of the notice cited above.

Date: December 31, 2010

/s/ Ray K. Shahani
Ray K. Shahani, Esq.
Attorney of record

///

Respectfully submitted,

RAY K. SHAHANI
ATTORNEY AT LAW

Dated: December 31, 2010

By: /s/ Ray K. Shahani
Ray K. Shahani, Esq.
**Attorney for Applicant(s)**

Ray K. Shahani, Esq. Registration No.: 37,554
Attorney at Law
Twin Oaks Office Plaza
477 Ninth Avenue, Suite 112
San Mateo, California 94402-1854
Telephone: (650) 348-1444 Facsimile: (650) 348-8655
E-mail: rks@attycubed.com

**CERTIFICATE OF TRANSMISSION**:
I hereby certify that this paper and the documents referred to as attached therein are being filed using USPTO EFS-Wed service under 37 CFR 1.10 on the date indicated and is addressed to "Commissioner for Patents.
Signed: /Leo K. Lai/. Date Transmitted: December 31, 2010.

UNITED STATES PATENT AND TRADEMARK OFFICE

UNITED STATES DEPARTMENT OF COMMERCE
United States Patent and Trademark Office
Address: COMMISSIONER FOR PATENTS
P.O. Box 1450
Alexandria, Virginia 22313-1450
www.uspto.gov

| APPLICATION NO. | FILING DATE | FIRST NAMED INVENTOR | ATTORNEY DOCKET NO. | CONFIRMATION NO. |
|---|---|---|---|---|
| 12/982,669 | 12/30/2010 | Eros G. Kaw | PGI-101 | 8820 |

46770 7590 03/15/2011
RAY K. SHAHANI, ESQ., ATTORNEY AT LAW
TWIN OAKS OFFICE PLAZA
477 NORTH NINTH AVENUE, SUITE 112
SAN MATEO, CA 94402-1858

| EXAMINER | |
|---|---|
| ART UNIT | PAPER NUMBER |
| 1772 | |

| MAIL DATE | DELIVERY MODE |
|---|---|
| 03/15/2011 | PAPER |

**Please find below and/or attached an Office communication concerning this application or proceeding.**

The time period for reply, if any, is set in the attached communication.

UNITED STATES PATENT AND TRADEMARK OFFICE

Commissioner for Patents
United States Patent and Trademark Office
P.O. Box 1450
Alexandria, VA 22313-1450
www.uspto.gov

RAY K. SHAHANI, ESQ., ATTORNEY AT LAW
TWIN OAKS OFFICE PLAZA
477 NORTH NINTH AVENUE, SUITE 112
SAN MATEO CA 94402-1858

3/15/2011

| | | |
|---|---|---|
| In re Application of | : | |
| Kaw | : | DECISION ON PETITION |
| Application No. 12/982,669 | : | TO MAKE SPECIAL UNDER |
| Filed: 12/30/2010 | : | THE GREEN TECHNOLOGY |
| Attorney Docket No. **PGI-101** | : | PILOT PROGRAM |

This is a decision on the petition under 37 CFR 1.102, filed 12/31/2010, to make the above-identified application special under the pilot program for applications pertaining to Green Technologies as set forth in 74 Federal Register Notice 64666 (December 8, 2009) and amended by 75 Federal Register Notice 28554 (May 21, 2010) and 75 Federal Register Notice 69049 (November 10, 2010).

The petition is **GRANTED**.

A grantable petition to make an application special under 37 CFR 1.102 and the pilot program as set forth in 74 FR 64666 must be directed to a nonprovisional application filed under 35 USC 111(a) or be a national stage entry under 35 USC 371, exclusive of any reissue applications.

In order to qualify for special status, the following requirements must be met. 1) The application must have no more than 3 independent claims and no more than 20 total claims. 2) The application must not contain any multiple dependent claims. 3) The petition must state the basis for seeking special status, i.e., the claimed invention either: A) materially enhances the quality of the environment or B) materially contributes to: i) the discovery or development of renewable energy resources, ii) the more efficient utilization and conservation of energy resources, or iii) greenhouse gas emission reduction. 4) If the disclosure is not clear on its face that the claimed invention materially contributes under category (A) or (B), the petition must be accompanied by a statement by the applicant, assignee, or an attorney/agent registered to practice before the Office explaining how the materiality standard is met. 5) A statement that applicant will agree to make an election without traverse in a telephonic interview if a restriction requirement is made by the examiner. 6) The petition to make special must be filed electronically. 7) The petition must be filed at least one day prior to the date that a first Office Action appears in the Patent Application Information Retrieval (PAIR) system. 8) The petition must be accompanied by a

request for early publication in compliance with 37 CFR 1.219 and include the publication fee as set forth in 37 CFR 1.18(d).

The requirement for a fee for consideration of the petition to make special for applications pertaining to Green Technologies has been waived.

The instant petition complies with items 1 – 8 above. Accordingly, the above-identified application has been accorded "special" status.

Telephone inquires concerning this decision should be directed to Tom Dunn at 571-272-1171.

The application is being forwarded to the Technology Center Art Unit 1772 for action on the merits commensurate with this decision.

/Tom Dunn/

Tom Dunn
Quality Assurance Specialist
Technology Center 1700

## *IN THE UNITED STATES PATENT AND TRADEMARK OFFICE*

| | |
|---|---|
| In re application of: Lance et al. | Attorney Docket No.: SKY1P014 |
| Application No.: 12/982,701 | Examiner: Unknown |
| Filed: December 30, 2010 | Group: 3749 |
| Title: SOLAR COLLECTOR | Confirmation No.: 8896 |

CERTIFICATE OF EFS-WEB TRANSMISSION

I hereby certify that this correspondence is being transmitted electronically through EFS-WEB to the Commissioner for Patents, P.O. Box 1450 Alexandria, VA 22313-1450 on January 13, 2011.

Signed: _____/Dawn Wold/_____
Dawn Wold

Commissioner for Patents
P.O. Box 1450
Alexandria, VA 22313-1450

Dear Sir:

Applicant hereby requests to participate in the Green Technology Pilot Program for the above-identified application.

Applicant hereby requests early publication under 37 CFR 1.219 and the publication fee set forth in 37 CFR 1.18(d) accompanies this request. The Commissioner is hereby authorized to Charge Deposit Account No. 50-4481 (Order No.: SKY1P014) for the amount of $300.

By filing this petition, Applicant is agreeing to make an election without traverse in a telephonic interview and elect an invention that meets the eligibility requirement and classification requirement set forth in the notice entitled "Pilot Program for Green Technologies Including Greenhouse Gas Reduction" that was published in the Federal Register if the Office determines that the claims are not obviously directed to a single invention.

The application contains no more than three (3) independent claims and twenty (20) total claims.

The application does not contain any multiple dependent claims.

Respectfully Submitted,
BEYER LAW GROUP LLP

/Eric Yoon/
Eric Yoon
Registration No.: 60,611

Date: January 13, 2011

P.O. Box 1687
Cupertino, CA 95015-1687
(408) 255-8001

UNITED STATES PATENT AND TRADEMARK OFFICE

UNITED STATES DEPARTMENT OF COMMERCE
United States Patent and Trademark Office
Address: COMMISSIONER FOR PATENTS
P.O. Box 1450
Alexandria, Virginia 22313-1450
www.uspto.gov

| APPLICATION NO. | FILING DATE | FIRST NAMED INVENTOR | ATTORNEY DOCKET NO. | CONFIRMATION NO. |
|---|---|---|---|---|
| 12/982,701 | 12/30/2010 | Tamir Lance | SKY1P014 | 8896 |

58766 7590 02/14/2011
Beyer Law Group LLP
P.O. BOX 1687
Cupertino, CA 95015-1687

| EXAMINER |
|---|

| ART UNIT | PAPER NUMBER |
|---|---|
| 3749 | |

| NOTIFICATION DATE | DELIVERY MODE |
|---|---|
| 02/14/2011 | ELECTRONIC |

**Please find below and/or attached an Office communication concerning this application or proceeding.**

The time period for reply, if any, is set in the attached communication.

Notice of the Office communication was sent electronically on above-indicated "Notification Date" to the following e-mail address(es):

USPTOmail@beyerlaw.com

UNITED STATES PATENT AND TRADEMARK OFFICE

Commissioner for Patents
United States Patent and Trademark Office
P.O. Box 1450
Alexandria, VA 22313-1450
www.uspto.gov

Beyer Law Group LLP
P.O. BOX 1687
Cupertino CA 95015-1687

| | | |
|---|---|---|
| In re Application of | : | |
| LANCE, TAMIR et al | : | DECISION ON PETITION |
| Application No. 12/982,701 | : | TO MAKE SPECIAL UNDER |
| Filed: Dec. 30, 2010 | : | THE GREEN TECHNOLOGY |
| Attorney Docket No. sky1p014 | : | PILOT PROGRAM |

This is a decision on the petition under 37 CFR 1.102, filed Jan. 13, 2011 to make the above-identified application special under the pilot program for applications pertaining to Green Technologies as set forth in 74 Federal Register Notice 64666 (December 8, 2009) and amended by 75 Federal Register Notice 28554 (May 21, 2010) and 75 Federal Register Notice 69049 (November 10, 2010).

The petition is granted.

A grantable petition to make an application special under 37 CFR 1.102 and the pilot program as set forth in 74 FR 64666 must be directed to a nonprovisional application filed under 35 USC 111(a) or be a national stage entry under 35 USC 371, exclusive of any reissue applications.

In order to qualify for special status, the following requirements must be met. 1) The application must have no more than 3 independent claims and no more than 20 total claims. 2) The application must not contain any multiple dependent claims. 3) The petition must state the basis for seeking special status, i.e., the claimed invention either: A) materially enhances the quality of the environment or B) materially contributes to: i) the discovery or development of renewable energy resources, ii) the more efficient utilization and conservation of energy resources, or iii) greenhouse gas emission reduction. 4) If the disclosure is not clear on its face that the claimed invention materially contributes under category (A) or (B), the petition must be accompanied by a statement by the applicant, assignee, or an attorney/agent registered to practice before the Office explaining how the materiality standard is met. 5) A statement that applicant will agree to make an election without traverse in a telephonic interview if a restriction requirement is made by the examiner. 6) The petition to make special must be filed electronically. 7) The petition

must be filed at least one day prior to the date that a first Office Action appears in the Patent Application Information Retrieval (PAIR) system. 8) The petition must be accompanied by a request for early publication in compliance with 37 CFR 1.219 and include the publication fee as set forth in 37 CFR 1.18(d).

The requirement for a fee for consideration of the petition to make special for applications pertaining to Green Technologies has been waived.

The instant petition complies with items 1 – 8 above. Accordingly, the above-identified application has been accorded "special" status.

Telephone inquires concerning this decision should be directed to Henry C. Yuen at 571-272-4856.

This application is now currently undergoing pre-examination processing. The application will be forwarded to the Technology Center Art Unit 3749 for action on the merits commensurate with this decision.

/Henry C. Yuen/

Henry C. Yuen
Quality Assurance Specialist
Technology Center TC 3700

UNITED STATES PATENT AND TRADEMARK OFFICE

Commissioner for Patents
United States Patent and Trademark Office
P.O. Box 1450
Alexandria, VA 22313-1450
www.uspto.gov

In re Application of
Holloway H. FROST

Application No. 12982702

Filed:

Attorney Docket No. 0053901-029US

:DECISION ON PETITION TO MAKE SPECIAL
:UNDER 37 CFR 1.102(c)(1)

This is a decision on the electronic petition under 37 CFR 1.102 (c)(1), filed 30-DEC-2010 to make the above-identified application special based on applicant's age as set forth in MPEP § 708.02, Section IV.

The petition is **GRANTED**.

A grantable petition to make an application special under 37 CFR 1.102(c)(1), MPEP § 708.02, Section IV: Applicant's Age must include a statement by applicant or a registered practitioner having evidence that applicant is at least 65 years of age. No fee is required.

Accordingly, the above-identified application has been accorded "special" status and will be taken up for action by the examiner upon the completion of all pre-examination processing.

Telephone inquiries concerning this electronic decision should be directed to the Electronic Business Center at 866-217-9197.

All other inquiries concerning either the examination or status of the application should be directed to the Technology Center.

## *IN THE UNITED STATES PATENT AND TRADEMARK OFFICE*

| | |
|---|---|
| In re application of: Wylie et al. | Attorney Docket No.: SKY1P016 |
| Application No.: 12/982,703 | Examiner: Unknown |
| Filed: December 30, 2010 | Group: 3749 |
| Title: SOLAR COLLECTOR | Confirmation No.: 8903 |

CERTIFICATE OF EFS-WEB TRANSMISSION

I hereby certify that this correspondence is being transmitted electronically through EFS-WEB to the Commissioner for Patents, P.O. Box 1450 Alexandria, VA 22313-1450 on January 13, 2011.

Signed: _____/Dawn Wold/_____
Dawn Wold

Commissioner for Patents
P.O. Box 1450
Alexandria, VA 22313-1450

Dear Sir:

Applicant hereby requests to participate in the Green Technology Pilot Program for the above-identified application.

Applicant hereby requests early publication under 37 CFR 1.219 and the publication fee set forth in 37 CFR 1.18(d) accompanies this request. The Commissioner is hereby authorized to Charge Deposit Account No. 50-4481 (Order No.: SKY1P016) for the amount of $300.

By filing this petition, Applicant is agreeing to make an election without traverse in a telephonic interview and elect an invention that meets the eligibility requirement and classification requirement set forth in the notice entitled "Pilot Program for Green Technologies Including Greenhouse Gas Reduction" that was published in the Federal Register if the Office determines that the claims are not obviously directed to a single invention.

The application contains no more than three (3) independent claims and twenty (20) total claims.

The application does not contain any multiple dependent claims.

Respectfully Submitted,
BEYER LAW GROUP LLP

/Eric Yoon/
Eric Yoon
Registration No.: 60,611

Date: January 13, 2011

P.O. Box 1687
Cupertino, CA 95015-1687
(408) 255-8001

UNITED STATES PATENT AND TRADEMARK OFFICE

UNITED STATES DEPARTMENT OF COMMERCE
United States Patent and Trademark Office
Address: COMMISSIONER FOR PATENTS
P.O. Box 1450
Alexandria, Virginia 22313-1450
www.uspto.gov

| APPLICATION NO. | FILING DATE | FIRST NAMED INVENTOR | ATTORNEY DOCKET NO. | CONFIRMATION NO. |
|---|---|---|---|---|
| 12/982,703 | 12/30/2010 | Cameron G. Wylie | SKY1P016 | 8903 |

58766 7590 02/14/2011
Beyer Law Group LLP
P.O. BOX 1687
Cupertino, CA 95015-1687

| EXAMINER |
|---|

| ART UNIT | PAPER NUMBER |
|---|---|
| 3749 | |

| NOTIFICATION DATE | DELIVERY MODE |
|---|---|
| 02/14/2011 | ELECTRONIC |

**Please find below and/or attached an Office communication concerning this application or proceeding.**

The time period for reply, if any, is set in the attached communication.

Notice of the Office communication was sent electronically on above-indicated "Notification Date" to the following e-mail address(es):

USPTOmail@beyerlaw.com

UNITED STATES PATENT AND TRADEMARK OFFICE

Commissioner for Patents
United States Patent and Trademark Office
P.O. Box 1450
Alexandria, VA 22313-1450
www.uspto.gov

Beyer Law Group LLP
P.O. BOX 1687
Cupertino CA 95015-1687

| | | |
|---|---|---|
| In re Application of | : | |
| WYLIE, CAMERON G. et al | : | DECISION ON PETITION |
| Application No. 12/982,703 | : | TO MAKE SPECIAL UNDER |
| Filed: Dec. 30, 2010 | : | THE GREEN TECHNOLOGY |
| Attorney Docket No. sky1p016 | : | PILOT PROGRAM |

This is a decision on the petition under 37 CFR 1.102, filed Jan. 13, 2011 to make the above-identified application special under the pilot program for applications pertaining to Green Technologies as set forth in 74 Federal Register Notice 64666 (December 8, 2009) and amended by 75 Federal Register Notice 28554 (May 21, 2010) and 75 Federal Register Notice 69049 (November 10, 2010).

The petition is granted.

A grantable petition to make an application special under 37 CFR 1.102 and the pilot program as set forth in 74 FR 64666 must be directed to a nonprovisional application filed under 35 USC 111(a) or be a national stage entry under 35 USC 371, exclusive of any reissue applications.

In order to qualify for special status, the following requirements must be met. 1) The application must have no more than 3 independent claims and no more than 20 total claims. 2) The application must not contain any multiple dependent claims. 3) The petition must state the basis for seeking special status, i.e., the claimed invention either: A) materially enhances the quality of the environment or B) materially contributes to: i) the discovery or development of renewable energy resources, ii) the more efficient utilization and conservation of energy resources, or iii) greenhouse gas emission reduction. 4) If the disclosure is not clear on its face that the claimed invention materially contributes under category (A) or (B), the petition must be accompanied by a statement by the applicant, assignee, or an attorney/agent registered to practice before the Office explaining how the materiality standard is met. 5) A statement that applicant will agree to make an election without traverse in a telephonic interview if a restriction requirement is made by the examiner. 6) The petition to make special must be filed electronically. 7) The petition

must be filed at least one day prior to the date that a first Office Action appears in the Patent Application Information Retrieval (PAIR) system. 8) The petition must be accompanied by a request for early publication in compliance with 37 CFR 1.219 and include the publication fee as set forth in 37 CFR 1.18(d).

The requirement for a fee for consideration of the petition to make special for applications pertaining to Green Technologies has been waived.

The instant petition complies with items 1 – 8 above. Accordingly, the above-identified application has been accorded "special" status.

Telephone inquires concerning this decision should be directed to Henry C. Yuen at 571-272-4856.

This application is now currently undergoing pre-examination processing. The application will be forwarded to the Technology Center Art Unit 3749 for action on the merits commensurate with this decision.

/Henry C. Yuen/

Henry C. Yuen
Quality Assurance Specialist
Technology Center TC 3700

UNITED STATES PATENT AND TRADEMARK OFFICE

Commissioner for Patents
United States Patent and Trademark Office
P.O. Box 1450
Alexandria, VA 22313-1450
www.uspto.gov

CHRISTIE, PARKER & HALE, LLP
PO BOX 7068
PASADENA, CA 91109-7068

**MAILED**

NOV 03 2011

**OFFICE OF PETITIONS**

Applicants: BIEDERMANN, et al.
Appl. No.: 12/982,728
Filing Date: December 30, 2010
Title: BONE SCREW
Attorney Docket No.: 66665/B884
Pub. No.: 2011/0125195 A1
Pub. Date: May 26, 2011

This is a decision on the request for correction of patent application publication under 37 CFR 1.221(b), received on June 29, 2011, for the above-identified application.

The request is granted

The corrected patent application publication will be published in due course, unless the patent issues before the application is republished.

Inquiries relating to this matter may be directed to Sherry D. Brinkley at (571) 272-3204.

/Christopher Bottorff/

Christopher Bottorff
Petitions Examiner
Office of Petitions

UNITED STATES PATENT AND TRADEMARK OFFICE

UNITED STATES DEPARTMENT OF COMMERCE
United States Patent and Trademark Office
Address: COMMISSIONER FOR PATENTS
P.O. Box 1450
Alexandria, Virginia 22313-1450
www.uspto.gov

| APPLICATION NO. | FILING DATE | FIRST NAMED INVENTOR | ATTORNEY DOCKET NO. | CONFIRMATION NO. |
|---|---|---|---|---|
| 12/982,733 | 12/30/2010 | Xiaohu XU | 4202-11300 | 8958 |

97698 7590 02/02/2011
Huawei Technologies Co., Ltd.
c/o Conley Rose, P.C.
5601 Granite Parkway
Plano, TX 75024

| EXAMINER |
|---|
| HWANG, JOON H |

| ART UNIT | PAPER NUMBER |
|---|---|
| 2447 | |

| MAIL DATE | DELIVERY MODE |
|---|---|
| 02/02/2011 | PAPER |

**Please find below and/or attached an Office communication concerning this application or proceeding.**

The time period for reply, if any, is set in the attached communication.

UNITED STATES PATENT AND TRADEMARK OFFICE

Commissioner for Patents
United States Patent and Trademark Office
P.O. Box 1450
Alexandria, VA 22313-1450
www.uspto.gov

MAILED

FEB 02 2011

DIRECTOR OFFICE
TECHNOLOGY CENTER 2400

Grant Rodolph
Huawei Technologies Co., Ltd.
c/o Conley Rose, P.C.
5601 Granite Parkway
Plano TX 75024

In re Application of: XU, Xiaohu
Serial No.: **12/982,733**
Filed: December 30, 2010
Atty Docket No: 4202-11300
Title: **METHOD AND DEVICE FOR MAINTAINING ROUTES**

DECISION ON PETITION TO MAKE SPECIAL FOR NEW APPLICATION UNDER 37 C.F.R. § 1.102 & M.P.E.P. § 708.02

This is a decision on the petition filed on December 30, 2010 to make the above-identified application special for accelerated examination procedure under 37 C.F.R. § 1.102(d).

The petition to make the application special is **DISMISSED**.

REGULATION AND PRACTICE

A grantable petition to make special under 37 C.F.R. § 1.102(d) and pursuant to the "Change to Practice for Petitions in Patent Applications to Make Special and for Accelerated Examination" published in the Federal Register on June 26, 2006 (71 Fed. Reg. 36323), must satisfy the following conditions:

I. Conditions Regarding the Application:

1. the application must be a non-reissue utility or design application filed under 37 CFR 1.111(a);
2. the application, the petition and the required fees must be filed electronically using the USPTO's electronic filing system (EFS), or EFS-web; if not filed electronically, a statement asserting that EFS and EFS-web were not available during the normal business hours.
3. at the time of filing, the application must be complete under 37 CFR 1.51 and in condition for examination;
4. the application must contain three or fewer independent claims and twenty or fewer total claims and the claims must be directed to a single invention.

II. Conditions Regarding the Petition:

The petition must:

1. be filed with the application;

2. include a statement that applicant agrees not to separately argue the patentability of any dependent claim during any appeal in the application;

3. include a statement that applicant agrees to make an election without traverse in a telephone interview.

4. include a statement that applicant agrees to conduct such an interview when requested by the examiner.

5. include a statement, made based on a good faith belief, that a preexamination search in compliance with the following requirements, was conducted, including an identification of the filed of search by United States class and subclass, where applicable, and for database searches, the search logic or chemical structure or sequence used as a query, the name of the file(s) searched and the database service, and the date of the search.

The preexamination search must:

5.1 involve U.S. patents and patent application publications, foreign patent documents, and non-patent literature, unless the applicant can justify with reasonable certainty that no references more pertinent than those already identified are likely to be found in the eliminated sources and includes such a justification with this statement;

5.2. be directed to the claimed invention and encompass all of the features of the claims, giving the claims the broadest reasonable interpretation;

5.3. encompass the disclosed features that may be claimed.

6. must provide in support of the petition an accelerated examination support document.

An accelerated examination support document must include:

6.1. an information disclosure statement (IDS) in compliance with 37 CFR 1.98 citing each reference deemed most closely related to the subject matter of each of the claims;

6.2. an identification of all the limitations in the claims that are disclosed by the reference specifying where the limitation is disclosed in the cited reference;

6.3. a detailed explanation of how each of the claims are patentable over the references cited with particularity required by 37 CFR 1.111(b) and (c);

6.4. a concise statement of the utility of the invention as defined in each of the independent claims (unless the application is a design application);

6.5. a showing of where each limitation of the claims finds support under 35 USC 112, first paragraph, in the written description of the specification. If applicable, the showing must also identify: (1) each means- (or step) plus-function claim element that invokes consideration under 35 UDC 112, sixth paragraph; and (2) the structure, material, or acts in the specification that corresponds to each means- (or step) plus-function claim element that invokes consideration under 35 UDC 112, sixth paragraph; if the application claims the benefit of one or more applications under title 35, United States Code, the showing must also include where each limitation of the claims finds support under 35 USC 112, first paragraph, in each such application in which such supports exists;

6.6. an identification of any cited references that may be disqualified under 35 USC 103(c).

## REVIEW OF FACTS

The conditions **I. 1-4, II. 1 – 5, 5.1 – 5.3, II. 6.3-6.4** above are considered to have been met. However, the petition fails to comply with conditions **II 6.2** above. Therefore, the petition fails to meet the required conditions to be accorded special status under the accelerated examination procedure.

Regarding to the requirement of MPEP §708.02(a) (I) (I) (2-3) and item II 6.2-6.3, the accelerated examination support document (AESD) must include: an identification of all the limitations in the claims that are disclosed by the reference specifying where the limitation is disclosed in the cited reference.

The AESD lacks clear identification of limitations of the claims disclosed by each of the cited references (p. 3-22). For example, in regard to dependent claim 3 and the Zhang et. al. reference, the AESD states "[d]ependent claim 3 is not anticipated by CRIO at least because it depends from claim 1. *Furthermore, the acquired routing information of the detailed prefix covered by the super prefix is preset in the PoP node that issues the routing information of the super prefix or registered by a border router in the communications network dynamically.*" It's unclear what does the italic portion attempt to relate, since it appears to be a mere recitation of the claim. Similarly, claims 4-9 has similar approach, thus, failing to identify whether or not the claimed limitation(s) are taught or not by the applied reference.

Regarding claim 2 and the Vasseur reference, provided discussion does not readily set forth whether or not the claim limitation is taught by the applied reference. Similarly, claims 3-9 have similar approach, thus, failing to identify whether or not the claimed limitation(s) are taught or not by the applied reference.

Applicant is encourage to review the section (9B Identification of Limitation Disclosed by References) in it's entirety for similar noted deficiencies

In accordance with the "*Guidelines for Applicants under the New Accelerated Examination Procedure*" document at the above mentioned web site. (Part I item 9 (B) on p. 4): "For each reference cited, the accelerated examination support document must include an *identification of all the limitations in the claims that are disclosed by the reference* specifying where the *limitation* is disclosed in the cited reference. Applicants should specify *where in each of the cited references the particular claim limitations are found.*

This process is intended to be analogous to the analysis an examiner uses when locating a relevant prior art reference and then determining whether the reference contains the claimed limitation. For each claimed limitation, the examiner would consider

the disclosure of the reference and all reasonable portions in the reference where the limitation is shown. When preparing an Office Action, the examiner would correlate the limitation to the portion of reference which best characterizes the limitation. This part of the AESD is not intended to be an exhaustive listing of every conceivable subjective interpretation of how a claim limitation may read on the reference. Applicants should point out what are considered to be the relevant representations of the limitation in the reference. The discussion of the teachings of the reference is deficient in that as presented it would materially affect examination of the application (e.g. numerous instances where the limitations are not clearly shown when discussing the identification of the limitations disclosed by each of the cited references) as such this part of the AESD is deemed insufficient (see "Guidelines for Applicants under the New Accelerated Examination Procedure" document at the above mentioned web site. (Part I item 9 (B) on p. 5).

Samples of an AE Support Document and FAQs are available online at out website at: http://www.uspto.gov/web/patents/accelerated/.

Regarding to the requirement of MPEP §708.02(a)(I)(2-3) and item II 6.3 above, the AESD requires a detailed explanation of how each of the claims are patentable with the particularity required by 37 CFR 1.111(b) and (c). Namely, point out the specific *distinctions* believed to render the claims, patentable over any applied references.

The AESD's section 9(C) "Statement of Patentability" (p. 23) states: .."because none of the references, singly or in combination, discloses or suggests a method in which PoP nodes within the same PoP group issue routing information of a same super prefix; PoP nodes within different PoP groups issue routing information of different super prefixes; and each PoP node acquires routing information of a detailed prefix covered by a super prefix issued by the PoP node itself, and synchronizing the routing information of the detailed prefix with the PoP nodes within the same PoP group. However, it unclear how does these features are commensurate with the features recited on claim 10.

For the above mentioned reasons, the showing of specification support is deemed to be insufficient for this part of the AESD.

For the above-stated reasons, the petition is **DISMISSED**. The application will therefore be taken up by the examiner for action in its regular turn.

Petitioner is given a single opportunity to perfect the petition. Any request for reconsideration of this decision must be submitted within 1 (one) month or 30 (thirty) days, whichever is longer, (no extension of time under 37 CFR 1.136(a)) from the date of this decision in order to be considered timely. Any request for reconsideration must address the deficiencies indicated above.

Petitioner is reminded that, upon granting of the special status of the application on request for reconsideration, the application will be processed expeditiously. However,

due to the dismissal of the instant petition, examination may not be completed within twelve months of the filing date of the application.

Any inquiry regarding this decision should be directed the undersigned whose telephone number is (571) 272-3902. If attempts to reach the undersigned by telephone are unsuccessful, alternatively, Kim Huynh, Quality Assurance Specialist, can be reached at (571) 272-4147.

/bp/

/Beatriz Prieto/

Beatriz Prieto, Quality Assurance Specialist
Technology Center 2400
***Network, Multiplexing, Cable and Security***

UNITED STATES PATENT AND TRADEMARK OFFICE

Commissioner for Patents
United States Patent and Trademark Office
P.O. Box 1450
Alexandria, VA 22313-1450
www.uspto.gov

MAILED

MAR 29 2011
DIRECTOR OFFICE
TECHNOLOGY CENTER 2400

Grant Rodolph
Huawei Technologies Co., Ltd.
c/o Conley Rose, P.C.
5601 Granite Parkway
Plano TX 75024

In re Application of: XU, Xiaohu
Serial No.: **12/982,733**
Filed: December 30, 2010
Atty Docket No: 4202-11300
Title: **METHOD AND DEVICE FOR MAINTAINING ROUTES**

DECISION ON PETITION TO MAKE SPECIAL FOR NEW APPLICATION UNDER 37 C.F.R. § 1.102 & M.P.E.P. § 708.02

This is a decision on the renewed petition filed on **March 24, 2011** to make the above-identified application special for accelerated examination procedure under 37 C.F.R. § 1.102(d). The original petition, submitted upon filing of the application on December 30, 2010 was dismissed in the decision mailed on February 02, 2011.

The petition to make the application special is **GRANTED** as the revised Examination Support Document meets the requirements of conditions II 6.2-6.3.

The application is eligible for accelerated examination and the renewed petition complies with the conditions for granting the application special status pursuant to the "Change to Practice for Petitions in Patent Applications to Make Special and for Accelerated Examination" published June 26, 2006, in the Federal Register. (71 Fed. Reg. 36323).

The prosecution of the instant application will be conducted expeditiously according to the following guidelines.

1. The application will be docketed to an examiner and taken up for action within two weeks of the date of this decision.

2. Restriction Practice:
If the examiner determines that the claims are not directed to a single invention, a telephone request to elect one single invention will be made pursuant to MPEP 812.01. As a prerequisite to the grant of this petition, the applicant has agreed to make an oral election, by telephone, without traverse. If the applicant refuses to make an election without traverse, or the examiner cannot reach the applicant after a reasonable effort, the examiner will treat the first claimed invention (invention

defined by claim 1) as having being constructively elected without traverse for examination.

3. Office action:
If it is determined that, after appropriate consultation, there is a potential rejection or any other issue to be addressed, the examiner will telephone the applicant and arrange an interview to discuss and resolve the issue. An Office action, other than a Notice of Allowance and Fee(s) Due (Notice of Allowance), will not be issued unless either: 1) an interview was conducted but did not result in agreed to action that places the application in condition for allowance, or, 2) a determination is made that an interview would be unlikely to result in the application being placed in condition for allowance, and 3) an internal conference has been held to review any rejection of any claim.

4. Time for Reply:
An Office action other than a Notice of Allowance or a final Office action will set a shortened statutory period of one month or thirty days, whichever is longer, for reply with no extension of time available under 37 CFR 1.136(a). Failure to timely file a reply within this non-extendible period for reply will result in the abandonment of the application.

5. Reply by Applicant:
A timely reply to an Office action other than the Notice of Allowance must be submitted electronically via EFS or EFS-web and limited to addressing the rejections, objections and requirement made. Any amendment that attempts to: 1) add claims which would result in more than three pending independent claims or more than twenty pending total claims; 2) present claims not encompassed by the pre-examination search or an updated accelerated examination support document; or 3) present claims that are directed a non-elected invention or an invention other than that previously claimed and examined in the application, will be treated as not fully responsive and will not be entered.

For any amendment to the claims (including any new claim) that is not encompassed by the accelerated examination support document, applicant must provide an updated accelerated examination support document that encompasses the amended or new claims at the time of filing of the amendment.

To proceed expeditiously with the examination, it is recommended that a reply with amendments made to any claim or with any new claim being added be accompanied by an updated accelerated examination support document or a statement explaining how the amended or new claim is supported by the original accelerated examination support document.

6. Information Disclosure Statement (IDS):
Any IDS filed during prosecution must be submitted electronically via EFS or EFS-web, accompanied by an updated accelerated examination support document, and be in compliance with 37 CFR 1.97 and 1.98.

7. Post-Allowance Processing:

To expedite processing of the allowed application into a patent, the applicant must: 1) pay the required fees within one month of the date of the Notice of Allowance, and 2) not file any post allowance papers not required by the Office. In no event may the issue fee be paid and accepted later than three months from the date of the Notice of Allowance.

8. After-Final and Appeal Procedures:
To expedite prosecution, after receiving the final Office action, applicant must: 1) promptly file a notice of appeal, an appeal brief and appeal fees; and 2) not request a pre-appeal brief conference. Any amendment, affidavit or other evidence filed after final Office action must comply with applicable rules and the requirements outlined in numbered paragraphs 5 and 6 above. On appeal, the application will proceed according to normal appeal procedures. After appeal, the application will again be treated special.

9. Proceedings Outside the Normal Examination Process:
If the application becomes involved in a proceeding that is outside the normal examination process (e.g., a secrecy order, national security review, interference proceeding, petitions under 37 CFR 1.181, 182 or 183), the application will be treated special before and after such proceeding.

10. Final Disposition:
The twelve month goal of this accelerated examination procedure ends with a final disposition. The mailing of a final Office action, a Notice of Allowance, the filing of a Notice of Appeal, or the filing of a Request for Continued Examination (RCE) is the final disposition. If, during prosecution, a paper is not filed electronically using EFS-web, a reply is filed but is not fully responsive, the application is involved in an appeal, or a proceeding outside normal examination process, the application will still be examined expeditiously, however, the final disposition may occur more than twelve months from the filing of the application.

Any inquiry regarding this decision should be directed to Beatriz Prieto, Quality Assurance Specialist, at (571) 272-3902. A second point of Contact is Kim Huynh at (571)-272-4147.

/Beatriz Prieto/

Beatriz Prieto, Quality Assurance Specialist
Technology Center 2400
**Networking, Multiplexing, Cable and Security**

UNITED STATES PATENT AND TRADEMARK OFFICE

UNITED STATES DEPARTMENT OF COMMERCE
United States Patent and Trademark Office
Address: COMMISSIONER FOR PATENTS
P.O. Box 1450
Alexandria, Virginia 22313-1450
www.uspto.gov

| APPLICATION NO. | FILING DATE | FIRST NAMED INVENTOR | ATTORNEY DOCKET NO. | CONFIRMATION NO. |
|---|---|---|---|---|
| 12/982,740 | 12/30/2010 | Ruobin ZHENG | 4202-11200 | 8969 |

97698 7590 03/01/2011
Huawei Technologies Co., Ltd.
c/o Conley Rose, P.C.
5601 Granite Parkway
Plano, TX 75024

| EXAMINER |
|---|

| ART UNIT | PAPER NUMBER |
|---|---|
| 2465 | |

| MAIL DATE | DELIVERY MODE |
|---|---|
| 03/01/2011 | PAPER |

**Please find below and/or attached an Office communication concerning this application or proceeding.**

The time period for reply, if any, is set in the attached communication.

UNITED STATES PATENT AND TRADEMARK OFFICE

Commissioner for Patents
United States Patent and Trademark Office
P.O. Box 1450
Alexandria, VA 22313-1450
www.uspto.gov

MAILED

FEB 28 2011

DIRECTOR OFFICE
TECHNOLOGY CENTER 2400

Huawei Technologies Co., Ltd.
c/o Conley Rose, P.C.
5601 Granite Parkway
Plano TX 75024

In re Application of:
RUOBIN ZHENG
Serial No.: 12/982,740
Filed: December 30, 2010
Docket: 4202-11200
Title: METHOD, APPARATUS AND SYSTEM FOR VIRTUAL NETWORK CONFIGURATION AND PARTITION HANDOVER

DECISION ON PETITION TO MAKE SPECIAL FOR NEW APPLICATION UNDER 37 C.F.R. § 1.102 & M.P.E.P. § 708.02

This is a decision on the petition filed on December 30, 2010 to make the above-identified application special for accelerated examination procedure under 37 C.F.R. § 1.102(d).

The petition to make the application special is **DISMISSED**.

## REGULATION AND PRACTICE

A grantable petition to make special under 37 C.F.R. § 1.102(d) and pursuant to the "Change to Practice for Petitions in Patent Applications to Make Special and for Accelerated Examination" published in the Federal Register on June 26, 2006 (71 Fed. Reg. 36323), must satisfy the following conditions:

I. Conditions Regarding the Application:

1. the application must be a non-reissue utility or design application filed under 37 CFR 1.111(a);
2. the application, the petition and the required fees must be filed electronically using the USPTO's electronic filing system (EFS), or EFS-web; if not filed electronically, a statement asserting that EFS and EFS-web were not available during the normal business hours.
3. at the time of filing, the application must be complete under 37 CFR 1.51 and in condition for examination;
4. the application must contain three or fewer independent claims and twenty or fewer total claims and the claims must be directed to a single invention.

II. Conditions Regarding the Petition:

The petition must:

1. be filed with the application;

2. include a statement that applicant agrees not to separately argue the patentability of any dependent claims during any appeal in the application;

3. include a statement that applicant agrees to make an election without traverse in a telephone interview.

4. include a statement that applicant agrees to conduct such an interview when requested by the examiner.

5. include a statement, made based on a good faith belief, that a preexamination search in compliance with the following requirements, was conducted, including an identification of the filed of search by United States class and subclass, where applicable, and for database searches, the search logic or chemical structure or sequence used as a query, the name of the file(s) searched and the database service, and the date of the search.

The preexamination search must:

5.1 involve U.S. patents and patent application publications, foreign patent documents, and non-patent literature, unless the applicant can justify with reasonable certainty that no references more pertinent than those already identified are likely to be found in the eliminated sources and includes such a justification with this statement;

5.2. be directed to the claimed invention and encompass all of the features of the claims, giving the claims the broadest reasonable interpretation;

5.3. encompass the disclosed features that may be claimed.

6. must provide in support of the petition an accelerated examination support document. An accelerated examination support document must include:

6.1. an information disclosure statement (IDS) in compliance with 37 CFR 1.98 citing each reference deemed most closely related to the subject matter of each of the claims;

6.2. an identification of all the limitations in the claims that are disclosed by the reference specifying where the limitation is disclosed in the cited reference;

6.3. a detailed explanation of how each of the claims is patentable over the references cited with particularity required by 37 CFR 1.111(b) and (c);

6.4. a concise statement of the utility of the invention as defined in each of the independent claims (unless the application is a design application);

6.5. a showing of where each limitation of the claims finds support under 35 USC 112, first paragraph, in the written description of the specification. If applicable, the showing must also identify: (1) each means- (or step) plus-function claim element that invokes consideration under 35 USC 112, sixth paragraph; and (2) the structure, material, or acts in the specification that corresponds to each means- (or step) plus-function claim element that invokes consideration under 35 USC 112, sixth paragraph; if the application claims the benefit of one or more applications under title 35, United States Code, the showing must also include where each limitation of the claims finds support under 35 USC 112, first paragraph, in each such application in which such supports exists;

6.6. an identification of any cited references that may be disqualified under 35 USC 103(c).

REVIEW OF FACTS

The conditions I.1 – I.4, II.1 – II.4, II5.1, and 5.3-II.6.6 above are considered to have been met. However, the petition fails to comply with condition II.5.2 above. Therefore, the petition fails to meet the required conditions to be accorded special status under the accelerated examination procedure.

Regarding the requirement of MPEP § 708.02(a)(I.)(H) and items II.5 and 5.2 above, the preexamination search must be directed to the (instant) claimed invention and encompass all of the features of the claims, giving the claims the broadest reasonable interpretation.

With respect to item II.5.2 above, based upon the claimed subject matter of the instant application, a limited classified search in the following class and subclasses is recommended in order to provide full coverage of where the most pertinent references are most likely to be found: Class 370, subclasses 328, 331 and 338.

DECISION

For the above-stated reasons, the petition is **dismissed**. The application will therefore be taken up by the examiner for action in its regular turn.

Petitioner is given a single opportunity to perfect the petition. Any request for reconsideration of this decision must be submitted within 1 (one) month or 30 (thirty) days, whichever is longer, (no extension of time under 37 CFR 1.136(a)) from the date of this decision in order to be considered timely. Any request for reconsideration must address the deficiencies indicated above.

Petitioner is reminded that, upon granting of the special status of the application on request for reconsideration, the application will be processed expeditiously. However, due to the dismissal of the instant petition, examination may not be completed within twelve months of the filing date of the application.

Any inquiry regarding this decision should be directed to Chau Nguyen at (571) 272-3126.

/Chau Nguyen/

Chau T. Nguyen
Workgroup Quality Assurance Specialist
Technology Center 2400
Networks, Multiplex, Cable and Security

UNITED STATES PATENT AND TRADEMARK OFFICE

UNITED STATES DEPARTMENT OF COMMERCE
United States Patent and Trademark Office
Address: COMMISSIONER FOR PATENTS
P.O. Box 1450
Alexandria, Virginia 22313-1450
www.uspto.gov

| APPLICATION NO. | FILING DATE | FIRST NAMED INVENTOR | ATTORNEY DOCKET NO. | CONFIRMATION NO. |
|---|---|---|---|---|
| 12/982,740 | 12/30/2010 | Ruobin ZHENG | 4202-11200 | 8969 |

97698 7590 04/14/2011
Huawei Technologies Co., Ltd.
c/o Conley Rose, P.C.
5601 Granite Parkway
Plano, TX 75024

| EXAMINER |
|---|

| ART UNIT | PAPER NUMBER |
|---|---|
| 2465 | |

| MAIL DATE | DELIVERY MODE |
|---|---|
| 04/14/2011 | PAPER |

**Please find below and/or attached an Office communication concerning this application or proceeding.**

The time period for reply, if any, is set in the attached communication.

UNITED STATES PATENT AND TRADEMARK OFFICE

Commissioner for Patents
United States Patent and Trademark Office
P.O. Box 1450
Alexandria, VA 22313-1450
www.uspto.gov

MAILED

APR 14 2011

DIRECTOR OFFICE
TECHNOLOGY CENTER 2400

Huawei Technologies Co., Ltd.
c/o Conley Rose, P.C.
5601 Granite Parkway
Plano TX 75024

In re Application of:
RUOBIN ZHENG
Serial No.: 12/982,740
Filed: December 30, 2010
Docket: 4202-11200
Title: METHOD, APPARATUS AND SYSTEM FOR VIRTUAL NETWORK CONFIGURATION AND PARTITION HANDOVER

DECISION ON PETITION TO MAKE SPECIAL FOR NEW APPLICATION UNDER 37 C.F.R. § 1.102 & M.P.E.P. § 708.02

This is a decision on the renewed petition filed on March 28, 2011 to make the above-identified application special for accelerated examination procedure under 37 C.F.R. § 1.102(d). The original petition, submitted on December 30, 2010 was dismissed in the decision mailed on February 28, 2011.

The renewed petition to make the application special is **GRANTED** as the supplemental search along with the orginal search now meets the requirements of conditions set forth under section II. Items 5.1-5.3.

The application is eligible for accelerated examination and the renewed petition complies with the conditions for granting the application special status pursuant to the "Change to Practice for Petitions in Patent Applications to Make Special and for Accelerated Examination" published June 26, 2006, in the Federal Register. (71 Fed. Reg. 36323).

The prosecution of the instant application will be conducted expeditiously according to the following guidelines.

1. The application will be docketed to an examiner and taken up for action within two weeks of the date of this decision.

2. Restriction Practice:
If the examiner determines that the claims are not directed to a single invention, a telephone request to elect one single invention will be made pursuant to MPEP 812.01. As a prerequisite to the grant of this petition, the applicant has agreed to

UNITED STATES PATENT AND TRADEMARK OFFICE

Commissioner for Patents
United States Patent and Trademark Office
P.O. Box 1450
Alexandria, VA 22313-1450
www.uspto.gov

Huawei Technologies Co., Ltd.
c/o Conley Rose, P.C.
5601 Granite Parkway
Plano TX 75024

| | |
|---|---|
| In re Application of:<br>RUOBIN ZHENG<br>Serial No.: 12/982,740<br>Filed: December 30, 2010<br>Docket: 4202-11200<br>Title: METHOD, APPARATUS AND SYSTEM FOR VIRTUAL NETWORK CONFIGURATION AND PARTITION HANDOVER | DECISION ON PETITION TO MAKE SPECIAL FOR NEW APPLICATION UNDER 37 C.F.R. § 1.102 & M.P.E.P. § 708.02 |

This is a decision on the renewed petition filed on March 28, 2011 to make the above-identified application special for accelerated examination procedure under 37 C.F.R. § 1.102(d). The original petition, submitted on December 30, 2010 was dismissed in the decision mailed on February 28, 2011.

The renewed petition to make the application special is **GRANTED** as the supplemental search along with the orginal search now meets the requirements of conditions set forth under section II. Items 5.2.

The application is eligible for accelerated examination and the renewed petition complies with the conditions for granting the application special status pursuant to the "Change to Practice for Petitions in Patent Applications to Make Special and for Accelerated Examination" published June 26, 2006, in the Federal Register. (71 Fed. Reg. 36323).

The prosecution of the instant application will be conducted expeditiously according to the following guidelines.

1. The application will be docketed to an examiner and taken up for action within two weeks of the date of this decision.

2. Restriction Practice:
If the examiner determines that the claims are not directed to a single invention, a telephone request to elect one single invention will be made pursuant to MPEP 812.01. As a prerequisite to the grant of this petition, the applicant has agreed to

make an oral election, by telephone, without traverse. If the applicant refuses to make an election without traverse, or the examiner cannot reach the applicant after a reasonable effort, the examiner will treat the first claimed invention (invention defined by claim 1) as having being constructively elected without traverse for examination.

3. Office action:
If it is determined that, after appropriate consultation, there is a potential rejection or any other issue to be addressed, the examiner will telephone the applicant and arrange an interview to discuss and resolve the issue. An Office action, other than a Notice of Allowance and Fee(s) Due (Notice of Allowance), will not be issued unless either: 1) an interview was conducted but did not result in agreed to action that places the application in condition for allowance, or, 2) a determination is made that an interview would be unlikely to result in the application being placed in condition for allowance, and 3) an internal conference has been held to review any rejection of any claim.

4. Time for Reply:
An Office action other than a Notice of Allowance or a final Office action will set a shortened statutory period of one month or thirty days, whichever is longer, for reply with no extension of time available under 37 CFR 1.136(a). Failure to timely file a reply within this non-extendible period for reply will result in the abandonment of the application.

5. Reply by Applicant:
A timely reply to an Office action other than the Notice of Allowance must be submitted electronically via EFS or EFS-web and limited to addressing the rejections, objections and requirement made. Any amendment that attempts to: 1) add claims which would result in more than three pending independent claims or more than twenty pending total claims; 2) present claims not encompassed by the pre-examination search or an updated accelerated examination support document; or 3) present claims that are directed a non-elected invention or an invention other than that previously claimed and examined in the application, will be treated as not fully responsive and will not be entered.
For any amendment to the claims (including any new claim) that is not encompassed by the accelerated examination support document, applicant must provide an updated accelerated examination support document that encompasses the amended or new claims at the time of filing of the amendment.
To proceed expeditiously with the examination, it is recommended that a reply with amendments made to any claim or with any new claim being added be accompanied by an updated accelerated examination support document or a statement explaining how the amended or new claim is supported by the original accelerated examination support document.

6. Information Disclosure Statement (IDS):

Any IDS filed during prosecution must be submitted electronically via EFS or EFS-web, accompanied by an updated accelerated examination support document, and be in compliance with 37 CFR 1.97 and 1.98.

7. Post-Allowance Processing:
To expedite processing of the allowed application into a patent, the applicant must: 1) pay the required fees within one month of the date of the Notice of Allowance, and 2) not file any post allowance papers not required by the Office. In no event may the issue fee be paid and accepted later than three months from the date of the Notice of Allowance.

8. After-Final and Appeal Procedures:
To expedite prosecution, after receiving the final Office action, applicant must: 1) promptly file a notice of appeal, an appeal brief and appeal fees; and 2) not request a pre-appeal brief conference.
Any amendment, affidavit or other evidence filed after final Office action must comply with applicable rules and the requirements outlined in numbered paragraphs 5 and 6 above.
On appeal, the application will proceed according to normal appeal procedures. After appeal, the application will again be treated special.

9. Proceedings Outside the Normal Examination Process:
If the application becomes involved in a proceeding that is outside the normal examination process (e.g., a secrecy order, national security review, interference proceeding, petitions under 37 CFR 1.181, 182 or 183), the application will be treated special before and after such proceeding.

10. Final Disposition:
The twelve month goal of this accelerated examination procedure ends with a final disposition. The mailing of a final Office action, a Notice of Allowance, the filing of a Notice of Appeal, or the filing of a Request for Continued Examination (RCE) is the final disposition.
If, during prosecution, a paper is not filed electronically using EFS-web, a reply is filed but is not fully responsive, the application is involved in an appeal, or a proceeding outside normal examination process, the application will still be examined expeditiously; however, the final disposition may occur more than twelve months from the filing of the application.

Any inquiry regarding this decision should be directed to Chau Nguyen at (571) 272-3126.

/Chau Nguyen/

Chau T. Nguyen
Workgroup Quality Assurance Specialist
Technology Center 2400
Networks, Multiplex, Cable and Security

UNITED STATES PATENT AND TRADEMARK OFFICE

UNITED STATES DEPARTMENT OF COMMERCE
United States Patent and Trademark Office
Address: COMMISSIONER FOR PATENTS
P.O. Box 1450
Alexandria, Virginia 22313-1450
www.uspto.gov

| APPLICATION NO. | FILING DATE | FIRST NAMED INVENTOR | ATTORNEY DOCKET NO. | CONFIRMATION NO. |
|---|---|---|---|---|
| 12/982,785 | 12/30/2010 | Anantha Sudhakar | 11731-041-999 | 9054 |

20583 7590 02/24/2011
JONES DAY
222 EAST 41ST ST
NEW YORK, NY 10017

| EXAMINER |
|---|
| JAVANMARD, SAHAR |

| ART UNIT | PAPER NUMBER |
|---|---|
| 1627 | |

| MAIL DATE | DELIVERY MODE |
|---|---|
| 02/24/2011 | PAPER |

**Please find below and/or attached an Office communication concerning this application or proceeding.**

The time period for reply, if any, is set in the attached communication.

UNITED STATES PATENT AND TRADEMARK OFFICE

Commissioner for Patents
United States Patent and Trademark Office
P.O. Box 1450
Alexandria, VA 22313-1450
www.uspto.gov

FEB 2 4 2011

JONES DAY
222 EAST 41ST ST
NEW YORK NY 10017

In re Application of:
Sudhakar et al.

Serial No.: 12/982,785

Filed: December 30, 2010

Docket No.: **11731-041-999**

Title: **STABLE SNS-595 COMPOSITIONS AND METHODS OF PREPARATION**

DECISION ON REQUEST FOR CONSIDERATION TO MAKE SPECIAL FOR NEW APPLICATION UNDER 37 C.F.R. § 1.102 & M.P.E.P. § 708.02

This is a decision on the petition filed on December 30, 2010 to make the above-identified application special for accelerated examination procedure under 37 C.F.R. § 1.102(d).

The petition to make the application special is GRANTED.

The application is eligible for accelerated examination and the petition complies with the conditions for granting the application special status pursuant to the "Change to Practice for Petitions in Patent Applications to Make Special and for Accelerated Examination" published June 26, 2006, in the Federal Register. (71 Fed. Reg. 36323).

The prosecution of the instant application will be conducted expeditiously according to the following guidelines.

1. The application will be docketed to an examiner and taken up for action within two weeks of the date of this decision.

2. Restriction Practice:
   If the examiner determines that the claims are not directed to a single invention, a telephone request to elect one single invention will be made pursuant to MPEP 812.01. As a prerequisite to the grant of this petition, the applicant has agreed to make an oral election, by telephone, without traverse. If the applicant refuses to make an election without traverse, or the examiner cannot reach the applicant after a reasonable effort, the examiner will treat the first claimed invention (invention defined by claim 1) as having being constructively elected without traverse for examination.

3. Office action:
   If it is determined that, after appropriate consultation, there is a potential rejection or any other issue to be addressed, the examiner will telephone the applicant and arrange an interview to discuss and resolve the issue. An Office action, other than a Notice of Allowance and Fee(s) Due (Notice of Allowance), will not be issued unless either: 1) an interview was conducted but did not result in agreed to action that places the application in condition for allowance, or, 2) a determination is made that an interview would be unlikely to result in the application being placed in condition for allowance, and 3) an internal conference has been held to review any rejection of any claim.

4. Time for Reply:
   An Office action other than a Notice of Allowance or a final Office action will set a shortened statutory period of one month or thirty days, whichever is longer, for reply with no extension of time available under 37 CFR 1.136(a). Failure to timely file a reply within this non-extendible period for reply will result in the abandonment of the application.

5. Reply by Applicant:
   A timely reply to an Office action other than the Notice of Allowance must be submitted electronically via EFS or EFS-web and limited to addressing the rejections, objections and requirement made. Any amendment that attempts to: 1) add claims which would result in more than three pending independent claims or more than twenty pending total claims; 2) present claims not encompassed by the pre-examination search or an updated accelerated examination support document; or 3) present claims that are directed a non-elected invention or an invention other than that previously claimed and examined in the application, will be treated as not fully responsive and will not be entered.

   For any amendment to the claims (including any new claim) that is not encompassed by the accelerated examination support document, applicant must provide an updated accelerated examination support document that encompasses the amended or new claims at the time of filing of the amendment.

   To proceed expeditiously with the examination, it is recommended that a reply with amendments made to any claim or with any new claim being added be accompanied by an updated accelerated examination support document or a statement explaining how the amended or new claim is supported by the original accelerated examination support document.

6. Information Disclosure Statement (IDS):
7. Any IDS filed during prosecution must be submitted electronically via EFS or EFS-web, accompanied by an updated accelerated examination support document, and be in compliance with 37 CFR 1.97 and 1.98.

8. Post-Allowance Processing:

To expedite processing of the allowed application into a patent, the applicant must: 1) pay the required fees within one month of the date of the Notice of Allowance, and 2) not file any post allowance papers not required by the Office. In no event may the issue fee be paid and accepted later than three months from the date of the Notice of Allowance.

9. After-Final and Appeal Procedures:
   To expedite prosecution, after receiving the final Office action, applicant must: 1) promptly file a notice of appeal, an appeal brief and appeal fees; and 2) not request a pre-appeal brief conference.

   Any amendment, affidavit or other evidence filed after final Office action must comply with applicable rules and the requirements outlined in numbered paragraphs 5 and 6 above.

   On appeal, the application will proceed according to normal appeal procedures. After appeal, the application will again be treated special.

10. Proceedings Outside the Normal Examination Process:
    If the application becomes involved in a proceeding that is outside the normal examination process (e.g., a secrecy order, national security review, interference proceeding, petitions under 37 CFR 1.181, 182 or 183), the application will be treated special before and after such proceeding.

11. Final Disposition:
    The twelve month goal of this accelerated examination procedure ends with a final disposition. The mailing of a final Office action, a Notice of Allowance, the filing of a Notice of Appeal, or the filing of a Request for Continued Examination (RCE) is the final disposition.

If, during prosecution, a paper is not filed electronically using EFS-web, a reply is filed but is not fully responsive, the application is involved in an appeal, or a proceeding outside normal examination process, the application will still be examined expeditiously, however, the final disposition may occur more than twelve months from the filing of the application.

Any inquiry regarding this decision should be directed to Marianne C. Seidel, Quality Assurance Specialist, at (571) 272-0584.

/MC Seidel/
Marianne C. Seidel, Quality Assurance Specialist
Technology Center 1600

IN THE UNITED STATES PATENT AND TRADEMARK OFFICE

APPLICANT: Jeremiah Cardone

SERIAL NO.:

FILED:

TITLE: SHOWER HEAT EXCHANGER WITH CLOG-REMOVABLE DRAIN

EXAMINER: To be assigned

GROUP ART UNIT: To be assigned

ATTORNEY DOCKET#: 101109 Cardone Shower

Commissioner of Patents
Mail Stop Green Technology Petitions
PO Box 1450
Alexandria VA 22313-1450

DECLARATION IN SUPPORT OF PETITION TO MAKE SPECIAL

Jeremiah Cardone declares:

1. I am the Applicant herein and I make this Declaration in support of my petition for special status from the United States Office pursuant to the Green Technology Pilot Program, 75 Federal Register 28554 to make the above identified patent application special on the grounds of energy conservation of domestic hot water.

2. I request early publication of the application pursuant to 37. C.F.R. 1.219 and submit the publication fee set forth in 37 C.F.R. 1.18(d).

3. There is one independent Claim and 20 total Claims. The application does not include any multiple dependent Claims.

4. The Claims are directed to a single invention that materially enhances the quality of the environment by a more efficient utilization and conservation of energy resources, namely for a substantial reduction in the need for domestic hot water for providing hot water for showers, by

preheating cold street water and raising its temperature, by exposing it to warm grey waste water flowing over a heat conductive plate, located over an isolated serpentine pathway through which the incoming cold street water is preheated.

5. My invention is a shower hot water energy recycling device (also known by the trade name SHWERD[tm]). The hook ups to this device are simply hot water inlet, cold water inlet and the bathtub/shower stall drain. There are no external hookups; no electricity and no moving part devices needed. The device uses hot, cold and draining grey waste water, like a normal shower.

6. The preheated, formerly cold, street water of about 50-51 degrees Fahrenheit is preheated to about 90 degrees Fahrenheit, and then mixed with hot water from a hot water heater/boiler at a temperature of about 125 degrees Fahrenheit. The mixed hot and preheated cold water results in shower water with a comfortable water temperature of about 103-104 degrees Fahrenheit.

The shower hot water energy recycling device produces water with a temperature of 103-104 degrees Fahrenheit, and recycles the heat energy from the shower that normally goes down the drain. Without my invention, that 103, 104 degree Fahrenheit grey waste water goes down the drain normally and is gone forever. What my invention does is to extract the heat from that grey waste water. The grey waste water will still ultimately go down the drain, but the heat will come back to our special heat transfer device, which preheats the cold 50-51 degrees Fahrenheit water to about 90° Fahrenheit with the grey waste water heat and puts it into the cold water faucet. So now the cold water faucet instead of being street temperature cold of about 50-51 degrees Fahrenheit is preheated to about 90-91 degrees Fahrenheit.

The heated grey waste water preheats the cold street water to around 90-91 degrees Fahrenheit. This preheated water now is almost hot enough to take a shower in at 90-91 degrees Fahrenheit.

7. The present invention also is in compliance with the Uniform Plumbing Code, because the space through which the grey waste water flows is tall enough in height to accommodate the Code-required two inch diameter ball through that space and down the drain, to also allow a user to clean the space of debris and hair clogs with a snake.

8. This invention is a flat, dry base exchanger, which is something new. This shower of the invention uses mostly preheated cold water and a very little bit of hot water. The cold street

water coming is about 50-51 degrees Fahrenheit. So the invention takes 50-51 degree Fahrenheit cold street water and preheats it temperature all the way up to 90-91 degrees Fahrenheit.

9. The invention is unlike solar hot water heating which needs the sun, and wind power, which needs wind and it only works when the wind blows.

10. The shower hot water energy recycling device of the invention works 7 days a week, 365 days a year, 24 hours a day. Any time a shower is taken, the device saves energy. No matter whether if the sun is out and no matter if the wind is blowing or not.

11. There are no moving parts in this device.

12. The shower hot water energy recycling device is a true sustainable energy product.

13. The following are the Sustainable / Green Energy Savings of the device:

14. To calculate BTU 's required for a 10 minute shower at 103 degrees Fahrenheit with a legal maximum shower flow rate of 2.5 Gpm or total of 25 gallons of shower water, there are 11,050 BTU's burned.

15. In contrast with the device of my invention, preheating incoming cold water reduces BTU's burned. The incoming cold water from the street comes in at 50-51 degrees Fahrenheit. The initial shower head hot temperature is about 103 degrees Fahrenheit, and the preheated water is about 90-91 degrees Fahrenheit, therefore, the device only uses 2,210 BTU's.

16. Using the United States population of 307 million total U.S. population according to the U.S. Census 2009, 3.4 trillion BTU's are burned per one shower per day for the total U.S.A. population or 1,238,207,750,000,000 (over 1.2 zillion) BTU's burned per year.

17. That amounts to 10,318,397,619 (over 10 billion) gallons of oil per year burned for one shower a day per person for one year .

USA Statistics

| | WITHOUT SHWERD$^{tm}$ | WITH SHWERD$^{tm}$ |
|---|---|---|
| BTU's Consumed Per Year | 1,238,207,750,000,00 (over 1.24 Zillion) | 247,641,550,000,000 (Only 248 Trillion) |
| Total U.S.A. BTU Energy Savings Per Year | | 990,566,200,000 (Over 991 Billion) |
| Oil Consumed Per Year | 10,318,397,916 (Over 10.3 Billion Gallons of Oil Per Year Just to Shower) | 2,063,679,583 (Only 2 Billion Gallons) |
| Total U.S.A. Oil Energy Savings Per Year | | 8,254,718,333 (Over 8.2 Billion Gallons) |

18. In terms of an oil tanker capacity (example Exxon Valdez) of 1.48 million barrels per ship, that's 62 million gallons of oil imported per Exxon Valdez size tanker ship. For example, picture 166 Exxon Valdez tankers oriented in a bumper to bumper array – that's 556 football fields in length or 31.5 miles of tankers full to capacity of oil just for taking showers for one (1) year in the United States. With my energy recycling device (SHWERD$^{tm}$), the U.S.A. would only need 34 Exxon Valdez size tankers, or 111 football fields in length, equaling just 6.4 miles of tankers. This results is a tremendous energy and greenhouse gas savings. Furthermore, it takes 1.5 gallons of crude oil to produce one (1) gallon of refined consumable oil. Therefore, there is also considerable residual energy savings in the reduced amount of crude oil required to produce consumable refined oil.

19. In contrast with the shower hot water heater energy recycling device (at 80% sustainable energy savings), only 33 tankers would be required for the same number of showers taken in the U.S. population. That reduces the number of tankers needed by 133 tankers per year.

20. It is also noted that it requires 1.5 gallons of oil to produce one gallon of usable oil from crude oil, so the energy savings is compounded with the present invention.

21. The shower hot water energy recycling device will reduce energy consumption which means less "Green House Gases" and less carbon in the Earth's atmosphere.

22. The shower hot water energy recycling device is immediately available to be manufactured in the United States, thereby creating new Green Technology jobs.

23. I request that the Commissioner of Patents permit the application to be made special pursuant to the Pilot Program For Green Technology of the United States Patent Office, on the grounds of advancing sustainable energy conservation of domestic shower hot water.

I declare that all statements made herein of my own knowledge are true and that all statements made on information and belief are believed to be true. I further that these statements were made with the knowledge that willful false statements the like so made are punishable by fine or imprisonment, or both, under Section 1001 of Title 18 of the United States Code, and that such willful false statements may jeopardize the validity of this document, the application, or any patent issuing thereon.

JVC Dated: December 28, 2010

Jeremiah Cardone

**Doc Code: PET.GREEN**
**Document Description: Petition for Green Tech Pilot**

PTO/SB/420 (11-10)
Approved for use through 01/31/2011. OMB 0651-0062
U.S. Patent and Trademark Office; U. S. DEPARTMENT OF COMMERCE
Under the Paperwork Reduction Act of 1995, no persons are required to respond to a collection of information unless it displays a valid OMB control number.

# PETITION TO MAKE SPECIAL UNDER THE GREEN TECHNOLOGY PILOT PROGRAM

| | | |
|---|---|---|
| Attorney Docket Number: 101109 Cardone Shower | Application Number (if known): | Filing date: December 30, 2010 |
| First Named Inventor: Jeremiah Cardone | | |
| Title: SHOWER HEAT EXCHANGER WITH CLOG-REMOVABLE DRAIN | | |

**APPLICANT HEREBY REQUESTS TO PARTICIPATE IN THE GREEN TECHNOLOGY PILOT PROGRAM FOR THE ABOVE-IDENTIFIED APPLICATION. See Instruction Sheet on page 2.**

This petition must be timely filed electronically using the USPTO electronic filing system, EFS-Web.

1. By filing this petition:

   **Applicant is requesting early publication: Applicant hereby requests early publication under 37 CFR 1.219 and the publication fee set forth in 37 CFR 1.18(d) accompanies this request.**

2. By filing this petition: applicant is agreeing to make an election without traverse in a telephonic interview and elect an invention that meets the eligibility requirements for the Green Technology Pilot Program, if the Office determines that the claims are not obviously directed to a single invention. See Instruction Sheet.

3. This request is accompanied by statements of special status for the eligibility requirement.

4. The application contains no more than three (3) independent claims and twenty (20) total claims.

5. The application does not contain any multiple dependent claims.

6. Other attachments: Declaration of Jeremiah Cardone

| | |
|---|---|
| Signature /Alfred M. Walker/ | Date December 30, 2010 |
| Name (Print/Typed) Alfred M. Walker | Registration Number 29,983 |

***Note:*** *Signatures of all the inventors or assignees of record of the entire interest or their representative(s) are required in accordance with 37 CFR 1.33 and 11.18. Please see 37 CFR 1.4(d) for the form of the signature. If necessary, submit multiple forms for more than one signature see below*.*

☒ *Total of 1 forms are submitted.

The information is required to obtain or retain a benefit by the public which is to file (and by the USPTO to process) an application. Confidentiality is governed by 35 U.S.C. 122 and 37 CFR 1.11 and 1.14. This collection is estimated to take 12 hours to complete, including gathering, preparing, and submitting the completed application form to the USPTO. Time will vary depending upon the individual case. Any comments on the amount of time you require to complete this form and/or suggestions for reducing this burden, should be sent to the Chief Information Officer, U.S. Patent and Trademark Office, U.S. Department of Commerce, P.O. Box 1450, Alexandria, VA 22313-1450. DO NOT SEND FEES OR COMPLETED FORMS TO THIS ADDRESS. **SEND TO: Commissioner for Patents, P.O. Box 1450, Alexandria, VA 22313-1450.**

*If you need assistance in completing the form, call 1-800-PTO-9199 and select option 2.*

Under the Paperwork Reduction Act of 1995, no persons are required to respond to a collection of information unless it displays a valid OMB control number.

# Instruction Sheet for Petition to Make Special Under the Green Technology Pilot Program

(Not to be Submitted to the USPTO)

**The following is a summary of the requirements (for more information see the notices (i) "Pilot Program for Green Technologies Including Greenhouse Gas Reduction," (ii) "Elimination of Classification Requirement in the Green Technology Pilot Program," and (iii) "Expansion and Extension of the Green Technology Pilot Program," available on the USPTO web site at http://www.uspto.gov/patents/init_events/green_tech.jsp):**

1) The application must be a non-reissue, non-provisional utility application filed under 35 U.S.C. 111 (a), or an international application that has entered the national stage in compliance with 35 U.S.C. 371, irrespective of the filing date of the application. Reexamination proceedings are excluded from this pilot program.

2) The application must contain three or fewer independent claims and twenty or fewer total claims. The application must not contain any multiple dependent claims. For an application that contains more than three independent claims or twenty total claims, or multiple dependent claims, applicant must file a preliminary amendment in compliance with 37 CFR 1.121 to cancel the excess claims and/or the multiple dependent claims at the time the petition to make special is filed.

3) The claims must be directed to a single invention that materially enhances the quality of the environment, or that materially contributes to: (1) the discovery or development of renewable energy resources; (2) the more efficient utilization and conservation of energy resources; or (3) green house gas emission reduction (see the eligibility requirements of sections II and III of the notice (i) cited above). The petition must include a statement that, if the USPTO determines that the claims are directed to multiple inventions (e.g., in a restriction requirement), applicant will agree to make an election without traverse in a telephonic interview, and elect an invention that meets the eligibility requirements in section II or III of the notice (i) cited above.

4) The petition to make special must be timely filed electronically using the USPTO electronic filing system, EFS-Web, and selecting the document description of "Petition for Green Tech Pilot" on the EFS-Web screen. Applicant should use form PTO/SB/420, which is available as a Portable Document Format (PDF) fillable form in EFS-Web and on the USPTO Web site.

5) The petition to make special must be filed at least one day prior to the date that a first Office action (which may be an Office action containing only a restriction requirement) appears in the Patent Application Information Retrieval (PAIR) system. Applicant may check the status of the application using PAIR.

6) The petition to make special must be accompanied by a request for early publication in compliance with 37 CFR 1.219 and the publication fee set forth in 37 CFR 1.18(d).

## Privacy Act Statement

The **Privacy Act of 1974 (P.L. 93-579)** requires that you be given certain information in connection with your submission of the attached form related to a patent application or patent. Accordingly, pursuant to the requirements of the Act, please be advised that: (1) the general authority for the collection of this information is 35 U.S.C. 2(b)(2); (2) furnishing of the information solicited is voluntary; and (3) the principal purpose for which the information is used by the U.S. Patent and Trademark Office is to process and/or examine your submission related to a patent application or patent. If you do not furnish the requested information, the U.S. Patent and Trademark Office may not be able to process and/or examine your submission, which may result in termination of proceedings or abandonment of the application or expiration of the patent.

The information provided by you in this form will be subject to the following routine uses:

1. The information on this form will be treated confidentially to the extent allowed under the Freedom of Information Act (5 U.S.C. 552) and the Privacy Act (5 U.S.C 552a). Records from this system of records may be disclosed to the Department of Justice to determine whether disclosure of these records is required by the Freedom of Information Act.
2. A record from this system of records may be disclosed, as a routine use, in the course of presenting evidence to a court, magistrate, or administrative tribunal, including disclosures to opposing counsel in the course of settlement negotiations.
3. A record in this system of records may be disclosed, as a routine use, to a Member of Congress submitting a request involving an individual, to whom the record pertains, when the individual has requested assistance from the Member with respect to the subject matter of the record.
4. A record in this system of records may be disclosed, as a routine use, to a contractor of the Agency having need for the information in order to perform a contract. Recipients of information shall be required to comply with the requirements of the Privacy Act of 1974, as amended, pursuant to 5 U.S.C. 552a(m).
5. A record related to an International Application filed under the Patent Cooperation Treaty in this system of records may be disclosed, as a routine use, to the International Bureau of the World Intellectual Property Organization, pursuant to the Patent Cooperation Treaty.
6. A record in this system of records may be disclosed, as a routine use, to another federal agency for purposes of National Security review (35 U.S.C. 181) and for review pursuant to the Atomic Energy Act (42 U.S.C. 218(c)).
7. A record from this system of records may be disclosed, as a routine use, to the Administrator, General Services, or his/her designee, during an inspection of records conducted by GSA as part of that agency's responsibility to recommend improvements in records management practices and programs, under authority of 44 U.S.C. 2904 and 2906. Such disclosure shall be made in accordance with the GSA regulations governing inspection of records for this purpose, and any other relevant (*i.e.*, GSA or Commerce) directive. Such disclosure shall not be used to make determinations about individuals.
8. A record from this system of records may be disclosed, as a routine use, to the public after either publication of the application pursuant to 35 U.S.C. 122(b) or issuance of a patent pursuant to 35 U.S.C. 151. Further, a record may be disclosed, subject to the limitations of 37 CFR 1.14, as a routine use, to the public if the record was filed in an application which became abandoned or in which the proceedings were terminated and which application is referenced by either a published application, an application open to public inspection or an issued patent.
9. A record from this system of records may be disclosed, as a routine use, to a Federal, State, or local law enforcement agency, if the USPTO becomes aware of a violation or potential violation of law or regulation.

UNITED STATES PATENT AND TRADEMARK OFFICE

Commissioner for Patents
United States Patent and Trademark Office
P.O. Box 1450
Alexandria, VA 22313-1450
www.uspto.gov

ALFRED M. WALKER
225 OLD COUNTRY ROAD
MELVILLE NY 11747-2712

**MAILED**

JAN 18 2011

**OFFICE OF PETITIONS**

| | | |
|---|---|---|
| In re Application of | : | |
| Jeremiah Cardone | : | |
| Application No. 12/982,797 | : | DECISION ON PETITION |
| Filed: December 30, 2010 | : | TO MAKE SPECIAL UNDER |
| Attorney Docket No. 282.002 | : | 37 CFR 1.102(c)(1) |
| | : | |

This is a decision on the petition under 37 CFR 1.102(c)(1), filed December 30, 2010, to make the above-identified application special based on applicant's age as set forth in MPEP § 708.02, Section IV.

The petition is **GRANTED**.

A grantable petition to make an application special under 37 CFR 1.102(c)(1) and MPEP § 708.02, Section IV: Applicant's Age must be accompanied by evidence showing that at least one of the applicants is 65 years of age, or more, such as a birth certificate or a statement by applicant. No fee is required

The instant petition includes a statement by a registered attorney. Accordingly, the above-identified application has been accorded "special" status.

Telephone inquiries concerning this decision should be directed to JoAnne Burke at 571-272-4584.

All other inquiries concerning either the examination or status of the application should be directed to the Technology Center.

The application is being forwarded to the Office of Patent Application Processing (OPAP) for action on the merits commensurate with this decision.

/JoAnne Burke/
JoAnne Burke
Petitions Examiner
Office of Petitions

UNITED STATES PATENT AND TRADEMARK OFFICE

UNITED STATES DEPARTMENT OF COMMERCE
United States Patent and Trademark Office
Address: COMMISSIONER FOR PATENTS
P.O. Box 1450
Alexandria, Virginia 22313-1450
www.uspto.gov

| APPLICATION NO. | FILING DATE | FIRST NAMED INVENTOR | ATTORNEY DOCKET NO. | CONFIRMATION NO. |
|---|---|---|---|---|
| 12/982,797 | 12/30/2010 | Jeremiah Cardone | 101109 Cardone Shower | 9072 |

4988 7590 01/25/2011
ALFRED M. WALKER
225 OLD COUNTRY ROAD
MELVILLE, NY 11747-2712

| EXAMINER |
|---|

| ART UNIT | PAPER NUMBER |
|---|---|
| 3751 | |

| MAIL DATE | DELIVERY MODE |
|---|---|
| 01/25/2011 | PAPER |

**Please find below and/or attached an Office communication concerning this application or proceeding.**

The time period for reply, if any, is set in the attached communication.

UNITED STATES PATENT AND TRADEMARK OFFICE

Commissioner for Patents
United States Patent and Trademark Office
P.O. Box 1450
Alexandria, VA 22313-1450
www.uspto.gov

ALFRED M. WALKER
225 OLD COUNTRY ROAD
MELVILLE NY 11747-2712

| | | |
|---|---|---|
| In re Application of | : | |
| CARDONE, JEREMIAH | : | DECISION ON PETITION |
| Application No. 12/982,797 | : | TO MAKE SPECIAL UNDER |
| Filed: Dec. 30, 2010 | : | THE GREEN TECHNOLOGY |
| Attorney Docket No. 101109 Cardone Shower | : | PILOT PROGRAM |

This is a decision on the petition under 37 CFR 1.102, filed Dec. 30, 2010, to make the above-identified application special under the pilot program for applications pertaining to Green Technologies as set forth in 74 Federal Register Notice 64666 (December 8, 2009) and amended by 75 Federal Register Notice 28554 (May 21, 2010) and 75 Federal Register Notice 69049 (November 10, 2010).

The petition is **dismissed**.
It is noted that on Jan. 18, 2011 a petition make special was granted based on age/health.

A grantable petition to make an application special under 37 CFR 1.102 and the pilot program as set forth in 74 FR 64666 must be directed to a nonprovisional application filed under 35 USC 111(a) or be a national stage entry under 35 USC 371, exclusive of any reissue applications.

In order to qualify for special status, the following requirements must be met. 1) The application must have no more than 3 independent claims and no more than 20 total claims. 2) The application must not contain any multiple dependent claims. 3) The petition must state the basis for seeking special status, i.e., the claimed invention either: A) materially enhances the quality of the environment or B) materially contributes to: i) the discovery or development of renewable energy resources, ii) the more efficient utilization and conservation of energy resources, or iii) greenhouse gas emission reduction. 4) If the disclosure is not clear on its face that the claimed invention materially contributes under category (A) or (B), the petition must be accompanied by a statement by the applicant, assignee, or an attorney/agent registered to practice before the Office explaining how the materiality standard is met. 5) A statement that applicant will agree to make an election without traverse in a telephonic interview if a restriction requirement is made by the examiner. 6) The petition to make special must be filed electronically. 7) The petition must be filed at least one day prior to the date that a first Office Action appears in the Patent Application Information Retrieval (PAIR) system. 8) The petition must be accompanied by a

request for early publication in compliance with 37 CFR 1.219 and include the publication fee as set forth in 37 CFR 1.18(d).

The requirement for a fee for consideration of the petition to make special for applications pertaining to Green Technologies has been waived.

The petition lacks item # 4.

In regard to item 4, petitioner should note that the instant petition includes a statement identifying the basis for the special status (i.e., whether the instant invention (1) materially enhances the quality of the environment or materially contributes to (2) development of renewable energy resources or energy conservation, or (3) greenhouse gas reduction) as required by sections II and III of the notice. However, as stated in the notice, applicant must also provide a statement pertaining to the materiality standard if the application disclosure is not clear on its face as to the materiality of the basis for the special status of the invention. This petition lacks such a statement and it is not agreed that the application on its face meets that materiality standard. Petitioner indicates that the claimed invention relates to materially enhance the quality of the environment and efficient utilization of energy and energy conservation. This is not convincing. For example, it is not clear how the claimed waste heat recovery heat exchanger will provide and enhance the quality of the environment or contribute to energy conservation or greenhouse gas reduction. It is a common sense that to use or recover waste heat for preheating incoming cold water in order to save energy.

Any reconsideration of this decision should be submitted through the USPTO electronic filing system, EFS-Web, and selecting the document description of "Petition for Green Tech Pilot" on the EFS-Web screen.

Telephone inquiries concerning this decision should be directed to Henry C. Yuen at 571-272-4856.

The application is currently undergoing pre-examination processing. The application will be forwarded to the Technology Center Art Unit 3751 for action in its special turn based on age and health.

/Henry C. Yuen/

Henry C. Yuen
Quality Assurance Specialist
Technology Center 3700

# *Alfred M. Walker*

*Attorney at Law*

*225 Old Country Road*
*Melville, New York 11747-2712*
*Tel No. (631) 361-8737*
*Fax No. (631) 361-8792*
*e-mail: walkerip@optonline.net*

*Admitted to United States Patent Office and New York State*


February 24, 2011

Commissioner of Patents
Mail Stop Green Technology Pilot Program
PO Box 1450
Alexandria VA 22313-1450

| | |
|---|---|
| Applicant: | Jeremiah Cardone |
| Serial. No.: | 12/982797 |
| Filed: | December 20, 2010 |
| For: | Shower Heat Exchanger with Clog Removeable Drain |
| Group Art Unit: | 3751 |
| Examiner: | To be assigned |

Quality Assurance Specialist: Henry Yuen

**REQUEST FOR RECONSIDERATION OF DECISION OF JANUARY 25, 2011**

Dear Sir:

Enclosed please find:

Request for Reconsideration of decision of January 25, 2011
Supplemental Declaration of Applicant
Certificate of Mailing.

Please acknowledge receipt on the enclosed postcard.

Respectfully submitted,

Alfred M. Walker
Reg. No. 29,983

I certify that this correspondence is being deposited with the United States Postal Service as Express Mail No.: EM454596975US in an envelope addressed to the Commissioner of Patents, PO Box 1450, Alexandria VA 22313-1450 on the date indicated below.

Date: February 24, 2011

Alfred M. Walker

IN THE UNITED STATES PATENT AND TRADEMARK OFFICE

| | |
|---|---|
| Applicant | : Jeremiah Cardone |
| Ser. No. | : 12/982,797 |
| Filed | : 12/30/10 |
| For | : Shower Heat Exchanger With Clog-Removable |
| Art Unit | : 3751 |
| Quality Assurance Spec | : Henry C. Yuen |
| Attorney Docket No. | : 1011109 Cardone Shower |

Mail Stop: Green Technology Petitions
Commissioner for Patents
PO Box 1450
Alexandria, VA 22313-1450

REQUEST FOR RECONSIDERATION OF DECISON

Sir:

This is a request for reconsideration of the decision dated Jan. 25, 2011 dismissing a petition to make special under the green technology pilot program.

Please deduct any applicable fee (small entity) from Applicant's attorney's Deposit Account Number 23-0120.

The dismissal was based upon the grounds that the petition either was not clear on its face that the "disclosure" materially contributes to "the more efficient utilization and conservation of energy resources" or the petition did not include "a statement by the applicant, assignee, or an attorney/agent registered to practice before the Office

explaining how the materiality standard is met". It is argued that, on both counts, especially the latter one, the materiality standard is met, for the following reasons:

Paragraph 4 of the petition summarizes the claimed invention drawn to a system for using warm grey water to preheat cold water destined to be heated for use in showering, thereby reducing fuel requirements to heat the cold water to a temperature required for use in the showers.

Paragraph 5 describes the claimed system as being simple in construction, requiring "no external hookups; no electricity and no moving part devices needed. The device uses hot, cold and draining grey waste water, like a normal shower".

Paragraphs. 14 to 20 describe in detail the considerable savings in terms of fuel oil consumption should the claimed invention be widely adopted. According to the chart appearing in paragraph 17, the claimed invention has the potential to reduce oil consumption by over 8 billion gallons a year, which would mean a substantial reduction in the amount of carbon released into the atmosphere each year (paragraph 21).

Paragraph 22 points out that the claimed invention "is immediately available to be manufactured in the United States, thereby creating new Green Technology jobs".

While Applicant respectfully submits that the foregoing information from the original petition of December 29, 2010 constitutes sufficient evidence of materiality according to the requirements of the item 4 of the Green Technologies Pilot Program, Applicant respectfully submits the attached Supplemental Declaration with additional information pertaining to Applicant's Shower Hot Water Energy Recovery Device.

Moreover, in the Decision of January 25, 2011 dismissing Applicant's petition, the Commissioner's representation notes that Applicant was granted special status on January 18, 2011 because of Applicant's age. However, the Commissioner's representative does not allege that Applicant's Green Technologies petition is moot, because Applicant was already granted special status based on age. The Commissioners' representative alleges no authority stating that the grant of Applicant's petition based on age prevents Applicant from receiving special status because of Applicant's petition

under the Green Technologies Pilot Program. If the grant of special status because of Applicant's age rendered Applicant's Green Technologies petition moot, then the Commissioner's representative should have cited legal precedent therefor.

The undersigned submits that the foregoing, appearing in the petition, explains clearly and adequately "how the materiality standard is met".

In view of the foregoing, it is requested that the petition, which is executed under oath by the Applicant, be reconsidered and granted, in the interest of promoting green technology and carrying out the purpose of the pilot program.

Respectfully submitted,

Date: February 24, 2011

Alfred M. Walker
Attorney for Applicant
Reg. No. 29,983
225 Old Country Road
Melville, New York 11747
(631) 361-8737

CERTIFICATE OF FAX TRANSMISSION

I hereby certify that this correspondence is being deposited by fax to 571-273-8300 on the date indicated below.

Date: February 24, 2011

Alfred M. Walker

IN THE UNITED STATES PATENT AND TRADEMARK OFFICE

| | |
|---|---|
| APPLICANT: | Jeremiah Cardone |
| SERIAL NO.: | 12/982,797 |
| CONFIRMATION NUMBER: | 9072 |
| FILED: | December 30, 2010 |
| TITLE: | SHOWER HEAT EXCHANGER WITH CLOG-REMOVABLE DRAIN |
| EXAMINER: | To be assigned |
| GROUP ART UNIT: | 3757 |
| ATTORNEY DOCKET#: | 101109 Cardone Shower |

Commissioner of Patents
Mail Stop Green Technology Petitions
PO Box 1450
Alexandria VA 22313-1450

DECLARATION IN SUPPORT OF REQUEST FOR RECONSIDERATION OF DECISION REGARDING PETITION TO MAKE SPECIAL

Jeremiah Cardone declares:

1. I am the Applicant herein and I make this Supplemental Declaration in support of my Request for Reconsideration of the Decision of the Commissioner denying my petition for special status from the United States Office pursuant to the Green Technology Pilot Program, 75 Federal Register 28554 to make the above identified patent application special on the grounds of energy conservation of domestic hot water.

2. On December 29, 2010, I filed a petition to grant special status to my application under the Pilot Program pertaining to Green Technologies. Each of my prior arguments therein in Paragraphs 1-23 are repeated herein.

3. On January 25, 2011, the Commissioner dismissed the petition on the grounds that of the 8 grounds required to meet the criteria for special status, I had met 7 of the 8 grounds, but that I did not have sufficient information regarding item #4 to meet the materiality standard as to how my subject matter either a) materially enhances the quality of the environment or b) materially contributes to i) the discovery or development of renewable energy resources, ii) more efficient utilization and conservation of energy resources, or iii) greenhouse gas reduction.

4. I respectfully note that I did meet the materiality requirement.

5. For example, Paragraph 4 of my Petition Declaration of December 29, 2010 summarizes my claimed invention drawn to a system for using warm grey water to preheat cold, incoming street water to be heated for use in domestic showering, thereby reducing fuel requirements to heat the incoming cold water to a temperature required for use in showers.

6. Additionally, Paragraph 5 of my Petition Declaration describes the claimed system as being simple in construction, requiring "no external hookups, no electricity and no moving part devices needed. My device uses hot, cold and draining grey waste water, like a normal shower."

7. Furthermore, Paragraphs 14-20 of my Petition Declaration describe in detail the considerable savings in terms of fuel oil consumption should my claimed invention be adopted. According to the chart of my Paragraph 17, my claimed invention has the potential to reduce oil consumption by over 8 billion gallon s per year, which would mean a substantial reduction in the amount of carbon released into the atmosphere each year, as noted in Paragraph 21 of my Petition Declaration.

8. Moreover, my Paragraph 22 points out that my claimed invention "is immediately available to be manufactured in the United States, thereby creating new Green Technology jobs."

9. Therefore, my Petition Declaration explains clearly and adequately "how the materiality statement is met."

While I respectfully submit that the foregoing constitutes sufficient evidence of materiality according to the requirements of the item 4 of the Green Technologies Pilot Program, I respectfully submit the following additional information pertaining to my Shower Hot Water Energy Recycling Device ( hereinafter referred to as SHWERD$^{tm}$): First, at its present state of development, my heat exchanger approaches 80% efficiency. However, when engineered to a finer state of precision, I believe it can be developed to a much higher range of efficiency, but for the purpose of this presentation, we will use 80% as a mean.

PARAMETERS

Avg shower time...10 minutes

Water volume at 2.5 GPM (Gallons per Minute)

Incoming Cold water from the street 50 degrees F

Showering temperature...102 degrees F

10 minute shower requires that one heat 25 gallons of water (10 minute shower at 2.5 GPM) 52 Degrees F

BTU's consumed for a 10 minute shower = 11,272.5 BTU's

Following calculations are based on 140,000 BTU's per gallon of oil.

Oil heater efficiency @80%, therefore useable BTU's = 112,000 per gallon of oil

SHWERD[tm] recovers 80% of the Lost Energy

CALCULATIONS

OIL/Year Family of Four/Year

11.272.5 x 4 = 45,090 BTU's per day per family at 4 showers

BTU's required per year/family of 4…16,457,850 BTU's

Gallons of oil required per family of four per year equals 16,457,850 divided by 112,000 BTU's/Gal – 147 Gallons of Oil per year per family of Four

NY STATE Oil Consumed/Year

Population 19,541,453

Each person consumes 37 Gallons of Oil per year to take one shower per day

37 x 19,541,453 = 723,033,761 Gallons of Oil consumed in NY State per year

TOTAL USA/Year

312,000,000 USA Population

OIL/USA/Year

BTU's required one shower per day per person USA…

11,272.5 BTU's x 365 days = 4,114,462.5 BTU's needed per year/person USA. One Shower times the USA Population 312,000,000 = 1,283,714,300,000,000 BTU's Consumed per year/person in USA. One shower per day per person Divided by 112,000 BTU/Per gal = 11,461,716,964 Gallons of Oil burned in one year at one shower per day per person…over 11.5 Billion Gallons of OIL/Year.

SAVINGS with the SHWERD[tm]

The SHWERD$^{tm}$ Heat Transfer Device would consistently save approximately 80% of the consumable energy required (whether Oil, Natural Gas, or Electricity) to heat a shower to 102 Degrees Fahrenheit

The SHWERD$^{tm}$ will Save 80% of All of the Above Numerical Conclusions, which represents a Sustainable Energy Platform.

Other factors

It takes One and a Half Gallons of Oil to Produce One Gallon of Consumable oil.

22 Pounds of Carbon Dioxide ($CO^2$) is in one gallon of home heating oil.

11.5 Billion Gallons of Oil are used by the USA population to take one shower per day per person x 22 pounds of $CO^2$ = 127 million tons of $CO^2$ per year at one Shower per person per day

With THE SHWERD$^{tm}$...An example of THE SHWERD$^{tm}$ Savings...

Typical $CO^2$ produced in the USA/Year equals...25 Million tons of $CO^2$.

With the SHWERD$^{tm}$ save 80% of the $CO^2$ emissions =a savings of 101 Million Tons of $CO^2$/Year,

With home heating oil prices at ONLY $3.50 per Gallon...and the US population uses 11,544 Million gallons of oil per year to take a shower a day...as a nation there is spent $40 Billion Dollars.

The SHWERD$^{tm}$ will save and redirect to the US Economy...$32 Billion per year.

With the SHWERD$^{tm}$ the Nation would only spend...$8 Billion per year for oil.

Chart of Findings Below

**CHART NUMBER ONE**

| Shower Energy and Dollar Requirements | BTU | OIL/GALS |
|---|---|---|
| Family 4 | | |
| Day | 45,090 | |
| Year | 16.5 Million | 147 |
| NY STATE | | |
| Year | 4.5 Million | 723 Million |
| USA Year | 1284 Trillion | 11.5 Billion |

**CHART NUMBER TWO**

Oil is used as the median energy cost between Natural gas and Electricity

| Family of 4 Oil NY State @ $3.50 per gal | Cost w/o SHWERD[tm] | Cost with the SHWERD[tm] | Total Savings |
|---|---|---|---|
| | $588 per Year | $117.60 per Year | $470.40 per Year |
| | $2.5 Billion/Year | $506 Million/Year | $2.2 Billion per Year |
| Oil $ USA | $40 Billion / Year | $8 Billion per/Year | $32 Billion per Year |

10. In the Decision of January 25, 2011 dismissing my petition, the Commissioner's representation notes that I was granted special status on January 18, 2011 because of my age. However, the Commissioner's representative does not allege that my Green Technologies petition is moot, because I was already granted special status based on age. The Commissioners' representative alleges no authority stating that the grant of my petition based on age prevents me from receiving special status because of my petition under the Green Technologies Pilot Program. If the grant of special status because of my age rendered my Green Technologies petition moot, then the Commissioner's representative should have cited legal precedent therefor.

11. I renew my request that the Commissioner of Patents permit the application to be made special pursuant to the Pilot Program For Green Technology of the United States Patent Office, on the grounds of advancing sustainable energy conservation of domestic shower hot water.

I declare that all statements made herein of my own knowledge are true and that all statements made on information and belief are believed to be true. I further declare that these statements were made with the knowledge that willful false statements and the like so made are punishable by fine or imprisonment, or both, under Section 1001 of Title 18 of the United States Code, and that such willful false statements may jeopardize the validity of this document, the application, or any patent issuing thereon.

Dated: February 24, 2011

Jeremiah Cardone

**EXTREMELY URGENT** *Please Rush To Addressee*

When used
affix custom
(PS Form 29

*Visit us at usps.com*

EM 454596975 US

Mailing Label
Label 11-F, April 2004

EXPRESS MAIL
UNITED STATES POSTAL SERVICE®

Post Office To Addressee

PRESS HARD. YOU ARE MAKING 3 COPIES.

**ORIGIN (POSTAL SERVICE USE ONLY)**

| | | |
|---|---|---|
| PO ZIP Code | Day of Delivery ☐ Next ☐ 2nd ☐ 2nd Del. Day | Postage $ |
| Date Accepted Mo. Day Year | Scheduled Date of Delivery Month Day | Return Receipt Fee $ |
| Time Accepted ☐ AM ☐ PM | Scheduled Time of Delivery ☐ Noon ☐ 3 PM | COD Fee $ / Insurance Fee $ |
| Flat Rate ☐ or Weight lbs. ozs. | Military ☐ 2nd Day ☐ 3rd Day | Total Postage & Fees $ |
| | Int'l Alpha Country Code | Acceptance Emp. Initials |

**DELIVERY (POSTAL USE ONLY)**

| | | |
|---|---|---|
| Delivery Attempt Mo. Day | Time ☐ AM ☐ PM | Employee Signature |
| Delivery Attempt Mo. Day | Time ☐ AM ☐ PM | Employee Signature |
| Delivery Date Mo. Day | Time ☐ AM ☐ PM | Employee Signature |

☐ **WAIVER OF SIGNATURE** *(Domestic Mail Only)* **Additional merchandise insurance is void if waiver of signature is requested.** I wish delivery to be made without obtaining signature of addressee or addressee's agent (if delivery employee judges that article can be left in secure location) and I authorize that delivery employee's signature constitutes valid proof of delivery.

**NO DELIVERY** ☐ Weekend ☐ Holiday

Customer Signature

**CUSTOMER USE ONLY**

METHOD OF PAYMENT:
Express Mail Corporate Acct. No. X005558

Federal Agency Acct. No. or Postal Service Acct. No.

FROM: (PLEASE PRINT) PHONE (631) 361 8737

WALKERS LAW OFFICES
225 OLD COUNTRY RD
MELVILLE NY 11747-2719

FLYNN CARDONE ALEMEO

TO: (PLEASE PRINT) PHONE ( )

Commissioner of Patents
PO Box 1450
Alexandria, VA 22313-1450

**FOR PICKUP OR TRACKING:** Visit **www.usps.com** or Call **1-800-222-1811**

55/ 250 F:02 T:

EP-13C

Please Recyc

OIPAP IAP25 FEB 2 4 2011 PATENT & TRADEMARK OFFICE

IN THE UNITED STATES PATENT AND TRADEMARK OFFICE

| | |
|---|---|
| Applicant | : Jeremiah Cardone |
| Ser. No. | : 12/982,797 |
| Filed | : 12/30/10 |
| For | : Shower Heat Exchanger With Clog-Removable |
| Art Unit | : 3751 |
| Quality Assurance Spec | : Henry C. Yuen |
| Attorney Docket No. | : 1011109 Cardone Shower |

Mail Stop: Green Technology Petitions
Commissioner for Patents
PO Box 1450
Alexandria, VA 22313-1450

REQUEST FOR RECONSIDERATION OF DECISON

Sir:

This is a request for reconsideration of the decision dated Jan. 25, 2011 dismissing a petition to make special under the green technology pilot program.

Please deduct any applicable fee (small entity) from Applicant's attorney's Deposit Account Number 23-0120.

The dismissal was based upon the grounds that the petition either was not clear on its face that the "disclosure" materially contributes to "the more efficient utilization and conservation of energy resources" or the petition did not include "a statement by the applicant, assignee, or an attorney/agent registered to practice before the Office

explaining how the materiality standard is met". It is argued that, on both counts, especially the latter one, the materiality standard is met, for the following reasons:

Paragraph 4 of the petition summarizes the claimed invention drawn to a system for using warm grey water to preheat cold water destined to be heated for use in showering, thereby reducing fuel requirements to heat the cold water to a temperature required for use in the showers.

Paragraph 5 describes the claimed system as being simple in construction, requiring "no external hookups; no electricity and no moving part devices needed. The device uses hot, cold and draining grey waste water, like a normal shower".

Paragraphs. 14 to 20 describe in detail the considerable savings in terms of fuel oil consumption should the claimed invention be widely adopted. According to the chart appearing in paragraph 17, the claimed invention has the potential to reduce oil consumption by over 8 billion gallons a year, which would mean a substantial reduction in the amount of carbon released into the atmosphere each year (paragraph 21).

Paragraph 22 points out that the claimed invention "is immediately available to be manufactured in the United States, thereby creating new Green Technology jobs".

While Applicant respectfully submits that the foregoing information from the original petition of December 29, 2010 constitutes sufficient evidence of materiality according to the requirements of the item 4 of the Green Technologies Pilot Program, Applicant respectfully submits the attached Supplemental Declaration with additional information pertaining to Applicant's Shower Hot Water Energy Recovery Device.

Moreover, in the Decision of January 25, 2011 dismissing Applicant's petition, the Commissioner's representation notes that Applicant was granted special status on January 18, 2011 because of Applicant's age. However, the Commissioner's representative does not allege that Applicant's Green Technologies petition is moot, because Applicant was already granted special status based on age. The Commissioners' representative alleges no authority stating that the grant of Applicant's petition based on age prevents Applicant from receiving special status because of Applicant's petition

under the Green Technologies Pilot Program. If the grant of special status because of Applicant's age rendered Applicant's Green Technologies petition moot, then the Commissioner's representative should have cited legal precedent therefor.

The undersigned submits that the foregoing, appearing in the petition, explains clearly and adequately "how the materiality standard is met".

In view of the foregoing, it is requested that the petition, which is executed under oath by the Applicant, be reconsidered and granted, in the interest of promoting green technology and carrying out the purpose of the pilot program.

Respectfully submitted,

Date: February 24, 2011

Alfred M. Walker
Attorney for Applicant
Reg. No. 29,983
225 Old Country Road
Melville, New York 11747
(631) 361-8737

CERTIFICATE OF FAX TRANSMISSION

I hereby certify that this correspondence is being deposited by fax to 571-273-8300 on the date indicated below.

Date: February 24, 2011

Alfred M. Walker

OIPE IAP25
FEB 2 4 2011
PATENT & TRADEMARK OFFICE

IN THE UNITED STATES PATENT AND TRADEMARK OFFICE

| | |
|---|---|
| APPLICANT: | Jeremiah Cardone |
| SERIAL NO.: | 12/982,797 |
| CONFIRMATION NUMBER: | 9072 |
| FILED: | December 30, 2010 |
| TITLE: | SHOWER HEAT EXCHANGER WITH CLOG-REMOVABLE DRAIN |
| EXAMINER: | To be assigned |
| GROUP ART UNIT: | 3757 |
| ATTORNEY DOCKET#: | 101109 Cardone Shower |

Commissioner of Patents
Mail Stop Green Technology Petitions
PO Box 1450
Alexandria VA 22313-1450

DECLARATION IN SUPPORT OF REQUEST FOR RECONSIDERATION OF DECISION REGARDING PETITION TO MAKE SPECIAL

Jeremiah Cardone declares:

1. I am the Applicant herein and I make this Supplemental Declaration in support of my Request for Reconsideration of the Decision of the Commissioner denying my petition for special status from the United States Office pursuant to the Green Technology Pilot Program, 75 Federal Register 28554 to make the above identified patent application special on the grounds of energy conservation of domestic hot water.

2. On December 29, 2010, I filed a petition to grant special status to my application under the Pilot Program pertaining to Green Technologies. Each of my prior arguments therein in Paragraphs 1-23 are repeated herein.

3. On January 25, 2011, the Commissioner dismissed the petition on the grounds that of the 8 grounds required to meet the criteria for special status, I had met 7 of the 8 grounds, but that I did not have sufficient information regarding item #4 to meet the materiality standard as to how my subject matter either a) materially enhances the quality of the environment or b) materially contributes to i) the discovery or development of renewable energy resources, ii) more efficient utilization and conservation of energy resources, or iii) greenhouse gas reduction.

4. I respectfully note that I did meet the materiality requirement.

5. For example, Paragraph 4 of my Petition Declaration of December 29, 2010 summarizes my claimed invention drawn to a system for using warm grey water to preheat cold, incoming street water to be heated for use in domestic showering, thereby reducing fuel requirements to heat the incoming cold water to a temperature required for use in showers.

6. Additionally, Paragraph 5 of my Petition Declaration describes the claimed system as being simple in construction, requiring "no external hookups, no electricity and no moving part devices needed. My device uses hot, cold and draining grey waste water, like a normal shower."

7. Furthermore, Paragraphs 14-20 of my Petition Declaration describe in detail the considerable savings in terms of fuel oil consumption should my claimed invention be adopted. According to the chart of my Paragraph 17, my claimed invention has the potential to reduce oil consumption by over 8 billion gallon s per year, which would mean a substantial reduction in the amount of carbon released into the atmosphere each year, as noted in Paragraph 21 of my Petition Declaration.

8. Moreover, my Paragraph 22 points out that my claimed invention "is immediately available to be manufactured in the United States, thereby creating new Green Technology jobs."

9. Therefore, my Petition Declaration explains clearly and adequately "how the materiality statement is met."

While I respectfully submit that the foregoing constitutes sufficient evidence of materiality according to the requirements of the item 4 of the Green Technologies Pilot Program, I respectfully submit the following additional information pertaining to my Shower Hot Water Energy Recycling Device ( hereinafter referred to as SHWERD$^{tm}$): First, at its present state of development, my heat exchanger approaches 80% efficiency. However, when engineered to a finer state of precision, I believe it can be developed to a much higher range of efficiency, but for the purpose of this presentation, we will use 80% as a mean.

PARAMETERS

Avg shower time...10 minutes

Water volume at 2.5 GPM (Gallons per Minute)

Incoming Cold water from the street 50 degrees F

Showering temperature...102 degrees F

10 minute shower requires that one heat 25 gallons of water (10 minute shower at 2.5 GPM) 52 Degrees F

BTU's consumed for a 10 minute shower = 11,272.5 BTU's

Following calculations are based on 140,000 BTU's per gallon of oil.

Oil heater efficiency @80%, therefore useable BTU's = 112,000 per gallon of oil

SHWERD$^{tm}$ recovers 80% of the Lost Energy

CALCULATIONS

OIL/Year Family of Four/Year

11.272.5 x 4 = 45,090 BTU's per day per family at 4 showers

BTU's required per year/family of 4...16,457,850 BTU's

Gallons of oil required per family of four per year equals 16,457,850 divided by 112,000 BTU's/Gal – 147 Gallons of Oil per year per family of Four

NY STATE Oil Consumed/Year

Population 19,541,453

Each person consumes 37 Gallons of Oil per year to take one shower per day

37 x 19,541,453 = 723,033,761 Gallons of Oil consumed in NY State per year

TOTAL USA/Year

312,000,000 USA Population

OIL/USA/Year

BTU's required one shower per day per person USA...

11,272.5 BTU's x 365 days = 4,114,462.5 BTU's needed per year/person USA. One Shower times the USA Population 312,000,000 = 1,283,714,300,000,000 BTU's Consumed per year/person in USA. One shower per day per person Divided by 112,000 BTU/Per gal = 11,461,716,964 Gallons of Oil burned in one year at one shower per day per person...over 11.5 Billion Gallons of OIL/Year.

SAVINGS with the SHWERD$^{tm}$

The SHWERD$^{tm}$ Heat Transfer Device would consistently save approximately 80% of the consumable energy required (whether Oil, Natural Gas, or Electricity) to heat a shower to 102 Degrees Fahrenheit

The SHWERD$^{tm}$ will Save 80% of All of the Above Numerical Conclusions, which represents a Sustainable Energy Platform.

Other factors

It takes One and a Half Gallons of Oil to Produce One Gallon of Consumable oil.

22 Pounds of Carbon Dioxide ($CO^2$) is in one gallon of home heating oil.

11.5 Billion Gallons of Oil are used by the USA population to take one shower per day per person x 22 pounds of $CO^2$ = 127 million tons of $CO^2$ per year at one Shower per person per day

With THE SHWERD$^{tm}$...An example of THE SHWERD$^{tm}$ Savings...

Typical $CO^2$ produced in the USA/Year equals...25 Million tons of $CO^2$.

With the SHWERD$^{tm}$ save 80% of the $CO^2$ emissions =a savings of 101 Million Tons of $CO^2$/Year,

With home heating oil prices at ONLY $3.50 per Gallon...and the US population uses 11,544 Million gallons of oil per year to take a shower a day...as a nation there is spent $40 Billion Dollars.

The SHWERD$^{tm}$ will save and redirect to the US Economy...$32 Billion per year.

With the SHWERD$^{tm}$ the Nation would only spend...$8 Billion per year for oil.

Chart of Findings Below

**CHART NUMBER ONE**

| Shower Energy and Dollar Requirements | BTU | OIL/GALS |
|---|---|---|
| Family 4 | | |
| Day | 45,090 | |
| Year | 16.5 Million | 147 |
| | | |
| NY STATE | | |
| Year | 4.5 Million | 723 Million |
| USA Year | 1284 Trillion | 11.5 Billion |

**CHART NUMBER TWO**

Oil is used as the median energy cost between Natural gas and Electricity

| Family of 4 | Cost w/o SHWERD$^{tm}$ | Cost with the SHWERD$^{tm}$ | Total Savings |
|---|---|---|---|
| Oil NY State @ $3.50 per gal | $588 per Year | $117.60 per Year | $470.40 per Year |
| | $2.5 Billion/Year | $506 Million/Year | $2.2 Billion per Year |
| Oil $ USA | $40 Billion / Year | $8 Billion per/Year | $32 Billion per Year |

10. In the Decision of January 25, 2011 dismissing my petition, the Commissioner's representation notes that I was granted special status on January 18, 2011 because of my age. However, the Commissioner's representative does not allege that my Green Technologies petition is moot, because I was already granted special status based on age. The Commissioners' representative alleges no authority stating that the grant of my petition based on age prevents me from receiving special status because of my petition under the Green Technologies Pilot Program. If the grant of special status because of my age rendered my Green Technologies petition moot, then the Commissioner's representative should have cited legal precedent therefor.

11. I renew my request that the Commissioner of Patents permit the application to be made special pursuant to the Pilot Program For Green Technology of the United States Patent Office, on the grounds of advancing sustainable energy conservation of domestic shower hot water.

I declare that all statements made herein of my own knowledge are true and that all statements made on information and belief are believed to be true. I further declare that these statements were made with the knowledge that willful false statements and the like so made are punishable by fine or imprisonment, or both, under Section 1001 of Title 18 of the United States Code, and that such willful false statements may jeopardize the validity of this document, the application, or any patent issuing thereon.

Dated: February 24, 2011

Jeremiah Cardone

UNITED STATES PATENT AND TRADEMARK OFFICE

UNITED STATES DEPARTMENT OF COMMERCE
United States Patent and Trademark Office
Address: COMMISSIONER FOR PATENTS
P.O. Box 1450
Alexandria, Virginia 22313-1450
www.uspto.gov

OPA
FEB 2 4 2011
PATENT & TRADEMARK OFFICE

| APPLICATION NO. | FILING DATE | FIRST NAMED INVENTOR | ATTORNEY DOCKET NO. | CONFIRMATION NO. |
|---|---|---|---|---|
| 12/982,797 | 12/30/2010 | Jeremiah Cardone | 101109 Cardone Shower | 9072 |

4988 7590 01/25/2011
ALFRED M. WALKER
225 OLD COUNTRY ROAD
MELVILLE, NY 11747-2712

| EXAMINER |
|---|

| ART UNIT | PAPER NUMBER |
|---|---|
| 3751 | |

| MAIL DATE | DELIVERY MODE |
|---|---|
| 01/25/2011 | PAPER |

**Please find below and/or attached an Office communication concerning this application or proceeding.**

The time period for reply, if any, is set in the attached communication.

COPY

UNITED STATES PATENT AND TRADEMARK OFFICE

Commissioner for Patents
United States Patent and Trademark Office
P.O. Box 1450
Alexandria, VA 22313-1450
www.uspto.gov

OPAP IAP25 FEB 2 4 2011 PATENT & TRADEMARK OFFICE

ALFRED M. WALKER
225 OLD COUNTRY ROAD
MELVILLE NY 11747-2712

| | | |
|---|---|---|
| In re Application of | : | |
| CARDONE, JEREMIAH | : | DECISION ON PETITION |
| Application No. 12/982,797 | : | TO MAKE SPECIAL UNDER |
| Filed: Dec. 30, 2010 | : | THE GREEN TECHNOLOGY |
| Attorney Docket No. 101109 Cardone Shower | : | PILOT PROGRAM |

This is a decision on the petition under 37 CFR 1.102, filed Dec. 30, 2010, to make the above-identified application special under the pilot program for applications pertaining to Green Technologies as set forth in 74 Federal Register Notice 64666 (December 8, 2009) and amended by 75 Federal Register Notice 28554 (May 21, 2010) and 75 Federal Register Notice 69049 (November 10, 2010).

The petition is **dismissed**.
It is noted that on Jan. 18, 2011 a petition make special was granted based on age/health.

A grantable petition to make an application special under 37 CFR 1.102 and the pilot program as set forth in 74 FR 64666 must be directed to a nonprovisional application filed under 35 USC 111(a) or be a national stage entry under 35 USC 371, exclusive of any reissue applications.

In order to qualify for special status, the following requirements must be met. 1) The application must have no more than 3 independent claims and no more than 20 total claims. 2) The application must not contain any multiple dependent claims. 3) The petition must state the basis for seeking special status, i.e., the claimed invention either: A) materially enhances the quality of the environment or B) materially contributes to: i) the discovery or development of renewable energy resources, ii) the more efficient utilization and conservation of energy resources, or iii) greenhouse gas emission reduction. 4) If the disclosure is not clear on its face that the claimed invention materially contributes under category (A) or (B), the petition must be accompanied by a statement by the applicant, assignee, or an attorney/agent registered to practice before the Office explaining how the materiality standard is met. 5) A statement that applicant will agree to make an election without traverse in a telephonic interview if a restriction requirement is made by the examiner. 6) The petition to make special must be filed electronically. 7) The petition must be filed at least one day prior to the date that a first Office Action appears in the Patent Application Information Retrieval (PAIR) system. 8) The petition must be accompanied by a

request for early publication in compliance with 37 CFR 1.219 and include the publication fee as set forth in 37 CFR 1.18(d).

The requirement for a fee for consideration of the petition to make special for applications pertaining to Green Technologies has been waived.

The petition lacks item # 4.

In regard to item 4, petitioner should note that the instant petition includes a statement identifying the basis for the special status (i.e., whether the instant invention (1) materially enhances the quality of the environment or materially contributes to (2) development of renewable energy resources or energy conservation, or (3) greenhouse gas reduction) as required by sections II and III of the notice. However, as stated in the notice, applicant must also provide a statement pertaining to the materiality standard if the application disclosure is not clear on its face as to the materiality of the basis for the special status of the invention. This petition lacks such a statement and it is not agreed that the application on its face meets that materiality standard. Petitioner indicates that the claimed invention relates to materially enhance the quality of the environment and efficient utilization of energy and energy conservation. This is not convincing. For example, it is not clear how the claimed waste heat recovery heat exchanger will provide and enhance the quality of the environment or contribute to energy conservation or greenhouse gas reduction. It is a common sense that to use or recover waste heat for preheating incoming cold water in order to save energy.

Any reconsideration of this decision should be submitted through the USPTO electronic filing system, EFS-Web, and selecting the document description of "Petition for Green Tech Pilot" on the EFS-Web screen.

Telephone inquiries concerning this decision should be directed to Henry C. Yuen at 571-272-4856.

The application is currently undergoing pre-examination processing. The application will be forwarded to the Technology Center Art Unit 3751 for action in its special turn based on age and health.

/Henry C. Yuen/

Henry C. Yuen
Quality Assurance Specialist
Technology Center 3700

UNITED STATES PATENT AND TRADEMARK OFFICE

UNITED STATES DEPARTMENT OF COMMERCE
United States Patent and Trademark Office
Address: COMMISSIONER FOR PATENTS
P.O. Box 1450
Alexandria, Virginia 22313-1450
www.uspto.gov

| APPLICATION NO. | FILING DATE | FIRST NAMED INVENTOR | ATTORNEY DOCKET NO. | CONFIRMATION NO. |
|---|---|---|---|---|
| 12/982,797 | 12/30/2010 | Jeremiah Cardone | 101109 Cardone Shower | 9072 |

4988 7590 03/02/2011
ALFRED M. WALKER
225 OLD COUNTRY ROAD
MELVILLE, NY 11747-2712

| EXAMINER |
|---|

| ART UNIT | PAPER NUMBER |
|---|---|
| 3744 | |

| MAIL DATE | DELIVERY MODE |
|---|---|
| 03/02/2011 | PAPER |

**Please find below and/or attached an Office communication concerning this application or proceeding.**

The time period for reply, if any, is set in the attached communication.

UNITED STATES PATENT AND TRADEMARK OFFICE

Commissioner for Patents
United States Patent and Trademark Office
P.O. Box 1450
Alexandria, VA 22313-1450
www.uspto.gov

ALFRED M. WALKER
225 OLD COUNTRY ROAD
MELVILLE NY 11747-2712

| | | |
|---|---|---|
| In re Application of | : | |
| CARDONE, JEREMIAH | : | DECISION ON PETITION |
| Application No. 12/982,797 | : | TO MAKE SPECIAL UNDER |
| Filed: Dec. 30, 2010 | : | THE GREEN TECHNOLOGY |
| Attorney Docket No. 101109 Cardone Shower | : | PILOT PROGRAM |

This is a decision on the renewed petition under 37 CFR 1.102, filed Feb. 24, 2011, to make the above-identified application special under the pilot program for applications pertaining to Green Technologies as set forth in 74 Federal Register Notice 64666 (December 8, 2009) and amended by 75 Federal Register Notice 28554 (May 21, 2010) and 75 Federal Register Notice 69049 (November 10, 2010).

The petition is **dismissed as moot.**

It is noted that on Jan. 18, 2011 a petition make special was granted based on age/health. Since this application ahs already accorded "special" status under 37 CFR 1.102 (c) (1). Therefore, the current petition to make special under the green technology becomes moot.

This application is now being forwarded to Art Unit 3744 for docketing and awaiting examination. Telephone inquiries concerning this decision should be directed to Henry C. Yuen at 571-272-4856.

/Henry C. Yuen/

Henry C. Yuen
Quality Assurance Specialist
Technology Center 3700

UNITED STATES PATENT AND TRADEMARK OFFICE

Commissioner for Patents
United States Patent and Trademark Office
P.O. Box 1450
Alexandria, VA 22313-1450
www.uspto.gov

**MAILED**

FEB 14 2012

**OFFICE OF PETITIONS**

**MARK HENRICK SANDSTROM**
**344 GROVE STREET**
**#242**
**JERSEY CITY, NJ 07302**

**In re Application of**
**Mark Henrik Sandstrom**
**Application No.: 12/982,826**
**Filed: December 30, 2010**
**Attorney Docket No.: 66938**
**For: System and Method for Maximizing Data Processing Throughout...**

**: DECISION ON REQUEST TO**
**: PARTICIPATE IN THE PATENT**
**: PROSECUTION HIGHWAY**
**: PROGRAM AND PETITION**
**: TO MAKE SPECIAL UNDER**
**: 37 CFR 1.102(a)**

This is a decision on the request to participate in the Patent Prosecution Highway (PPH) program filed on December 19, 2011.

The request and petition are **DISMISSED**.

A grantable request to participate in the PPH program and petition to make special require:

(1) The U.S. application must validly claim priority under 35 U.S.C. 119(a) to one or more applications filed in the UK IPO, note where the UK IPO application with similar claims is not the same application from which the U.S. application claims priority that the applicant must identify the relationship between the UK IPO application with similar claims and the UK IPO priority application;

(2) Applicant must submit a copy of:
The allowable/patentable claim(s) from the UK IPO application(s);

(3) Applicant must:
a. Ensure all the claims in the U.S. application must sufficiently correspond or be amended to sufficiently correspond to the allowable/patentable claim(s) in the UK IPO application(s); and
b. Submit a claims correspondence table;

(4) Examination of the U.S. application has not begun;

(5) Applicant must submit:
A copy of all of the office actions from each of the UK IPO application(s) containing the allowable/patentable claims that are the basis for the request or request that the USPTO obtain a copy from the UK IPO. If the USPTO is not able to obtain a copy of all of the office actions from the UK IPO, the applicant will be notified and requested to provide the necessary documents.

(6) Applicant must submit:

a. An IDS listing the documents cited by the UK IPO examiner in the UK IPO office action (unless already submitted in this application); and
b. Copies of documents except U.S. patents or U.S. patent application publications (unless already submitted in this application)

Conditions (1, 2, 4-6) above are considered to have been met. However, the request to participate in the PPH pilot program and petition fails meet conditions (3).

Regarding the requirement of condition (3), claim 1 in the US and UK case does not correspond with each other. Claim 1 of the UK case has additional text of, "wherein the CPU processes data and instructions of at least some of the set of software applications..." and thus is not substantially the same of that of the US case.

Applicant is given **ONE** opportunity within a time period of **ONE MONTH or THIRTY DAYS**, whichever is longer, from the mailing date of this decision to correct the deficiencies. **NO EXTENSION OF TIME UNDER 37 CFR 1.136 IS PERMITTED.** If the deficiencies are not corrected with the time period given, the application will await action in its regular turn.

Response must be filed via the Electronic Filing System (EFS) using the document description: Petition to make special under Patent Pros Hwy. Any preliminary amendments and IDS submitted with the PPH documents must be separately indexed as a preliminary amendment and IDS, respectively. .

Inquiries concerning this decision should be directed to Joanne Hama at (571) 272-2911 or to the undersigned at (571) 272-7099.

All other inquiries concerning the examination or status of the application is accessible in the PAIR system at http://www.uspto.gov/ebc.index.html.

David Buiecl
Petitions Examiner
Office of Petitions

**IN THE UNITED STATES**

**PATENT AND TRADEMARK OFFICE**

| | |
|---|---|
| APPLICANTS: | Mark Sandstrom |
| APPLICATION NO.: | 12/982,826 |
| FILING DATE: | 2010-December-30 |
| TITLE: | System And Method For Maximizing Data Processing Throughput Via Application Load Adaptive Scheduling And Content Switching |
| EXAMINER: | |
| GROUP ART UNIT: | 2196 |

---

**CERTIFICATE OF ELECTRONIC (EFS-WEB) TRANSMISSION**

I hereby certify that this correspondence is being transmitted via the Office electronic filing system in accordance with 37 C.F.R. § 1.8(a)(i)(C) from the Pacific Time Zone of the United States on the local date shown below.

Dated: February 16, 2012 By: /Mark H. Sandstrom/
Mark H. Sandstrom

**MAIL STOP AMENDMENT**
**COMMISSIONER FOR PATENTS**
**P.O. BOX 1450**
**ALEXANDRIA, VA 22313-1450**

## RENEWED PETITION UNDER PPH AND AMENDMENT A

Sir:

In response to the decision on the PPH petition for this application mailed February 14, 2012 -- specifically, to correct the deficiency in the PPH petition identified in the decision letter and to thereby make the PPH petition grantable -- please amend the above-referenced application as indicated in the following pages.

## AMENDMENTS TO THE CLAIMS

1. (Currently amended) An application load adaptive digital data processing system, comprising:

a central processing unit (CPU) for processing data and instructions from input data arrays of the system and storing results in output data arrays of the system; and

a scheduler for periodically, once in a set of CPU cycles referred to as an allocation period, producing a schedule that assigns a set of CPU cycles on an upcoming allocation period among a set of software applications sharing the CPU,

wherein the producing of the schedule by the scheduler is done at least in part based on indicators, by at least some among the set of software applications, expressing whether a given software application is ready to use one or more CPU cycles on the upcoming allocation period, and

wherein the CPU processes data and instructions of at least some of the set of software applications on the upcoming allocation period with the CPU cycles assigned among the applications according to the schedule produced for that allocation period by the scheduler.

2. (Original) The system of claim 1, wherein the scheduler is implemented in hardware logic.

3. (Original) The system of claim 1, wherein the indicators are software variables mapped to device registers within a memory space of the CPU, with said device registers being accessible by the scheduler.

4. (Original) The system of claim 1, wherein at least one of the indicators comprise at least one of: (i) a binary variable expressing whether its associated software application is currently ready to execute on the CPU, and (ii) a number indicating a quantity of CPU cycles that its associated software application is currently ready to consume.

5. (Original) The system of claim 1, wherein the input and output data arrays comprise at least one of: i) CPU accessible memories, and ii) CPU accessible input and output communication ports.

6. (Original) The system of claim 1, wherein the schedule comprises a digital look-up-table (LUT) within hardware logic of the system, with said LUT storing sequences of application identifiers for CPU allocation periods, and with the application identifiers in successive addresses of the LUT directing multiplexing of application processing contexts for the CPU for successive CPU cycles of the allocation periods.

7. (Original) An application load adaptive digital data processing method, comprising steps of:

by at least one application among a set of software applications configured to share a given processing hardware, maintaining in a hardware device register a ready-to-execute status indicator to be used in determining an optimal allocation of the processing hardware capacity among said set of applications;

by a scheduler hardware logic, periodically determining the optimal allocation of the shared processing hardware capacity among said set of applications at least in part based on the ready-to-execute status indicators of one or more of the set of software applications configured to share the given processing hardware; and

by the shared processing hardware, processing of instructions and data of the set of software applications to produce a set of data processing outputs, with sequences of applications for processing by said shared processing hardware being based at least in part on the determining of the optimal allocation of the processing hardware capacity by the scheduler hardware logic.

8. (Original) The method of claim 7, wherein the determining the optimal allocation of the shared processing hardware capacity is done with an objective of maximizing a processing throughput of said shared processing hardware.

9. (Original) The method of claim 7, wherein the determining the optimal allocation of the shared processing hardware capacity is done in a manner that maximizes a processing throughput of said shared processing hardware, while ensuring that all applications among said set of software applications get no less than their entitled time-share of the processing hardware capacity whenever they are able to offer at least that level of processing load to the shared processing hardware.

10. (Original) The method of claim 7, wherein the determining the optimal allocation of the shared processing hardware capacity is done with an objective of maximizing a processing throughput of one or more applications among the set of software applications sharing said processing hardware taking into consideration a prioritization among said set of applications.

11. (Original) The method of claim 7, wherein the step of determining produces a digital hardware logic look-up-table storing sequences assigning units of processing time on the shared hardware among the set of software applications sharing the given processing hardware.

12. (Original) The method of claim 7, wherein at least one of the ready-to-execute status indicators comprise at least one of: (i) a binary variable expressing whether its associated software application is currently ready to execute on the shared processing hardware, and (ii) a number indicating a quantity of processing cycles that its associated software application is currently ready to consume on the shared processing hardware.

13. (Original) The method of claim 7, wherein the sequences of applications for processing by the shared processing hardware are stored in a digital hardware logic look-up-table (LUT), with application identifiers in stored successive addresses of the LUT directing multiplexing of application processing contexts for the shared processing hardware.

14. (Original) An algorithm for allocating, by a scheduler implemented in digital hardware logic, a processing capacity of a time shared CPU among a set of software applications, the algorithm comprising steps of:

monitoring ready-to-execute indicators of one or more applications among a set of software applications, with said indicators expressing at least one of the following: (a) whether a given software application is currently ready to execute on the CPU, and (b) how many CPU cycles the given application is a currently able to consume;

once in a set of CPU cycles referred to as an allocation period, allocating a set of CPU cycles for an upcoming allocation period among said set of software applications sharing the CPU at least in part based on values of the ready-to-execute indicators of one or more of said set of applications; and

controlling a time sharing of the CPU among said set of software applications according to the allocating of the CPU cycles by the scheduler logic.

15. (Original) The algorithm of claim 14, wherein the step of allocating the CPU cycles for an allocation period results in minimizing a greatest amount of unmet demands for CPU cycles among the set of software applications.

16. (Original) The algorithm of claim 14, wherein the step of allocating the CPU cycles for an allocation period is done in a manner that minimizes a greatest amount of unmet demands among the set of software applications, while ensuring that any given application gets at least its entitled share of CPU cycles on such allocation periods on which it so demanded.

17. (Original) The algorithm of claim 16, wherein the entitled share of CPU cycles for a given software application on an allocation period is one of: i) even division of amount of the CPU cycles on the allocation period among the set of applications, or ii) a contract based amount of CPU cycles, or iii) an amount of CPU cycles based on amounts of CPU cycles demanded on the allocation period by applications among said set of applications and the respective priorities of said applications.

18. (Original) The algorithm of claim 14, wherein the step of allocating the CPU cycles for at least some of the allocation periods is done so that (i) first, any actually materialized CPU cycle demands by any applications up to their entitled share CPU capacity are met, and (ii)

following that, any remaining CPU cycles are assigned in an even manner among the applications whose demand for CPU cycles had not been met by the amount of CPU cycles so far allocated to them.

19. (Original) The algorithm of claim 14, wherein the step of allocating the CPU cycles for at least some of the allocation periods is done so that (i) first, any actually materialized CPU cycle demands by any applications, up to their entitled share CPU capacity, are met, and (ii) following that, any remaining CPU cycles are assigned in an even manner among all the applications.

20. (Original) The algorithm of claim 14, wherein the step of allocating the CPU cycles among the set of software applications produces sequences of application identifiers stored in a hardware logic digital look-up-table (LUT), with the application identifiers stored in successive addresses of the LUT for a given allocation period directing multiplexing of application processing contexts for the CPU for successive CPU cycles of the given allocation period.

## REMARKS

Claims 1-20 were presented for examination and are pending in this application. Via this Renewed Petition under Patent Prosecution Highway (PPH) and Amendment, claim 1 is amended, in response to the PPH petition decision mailed on February 14, 2012.

On the basis of this Renewed Petition under PPH, allowance of the PPH petition (originally filed on December 19, 2011) for this application is requested.

The decision letter for dismissing the PPH petition stated (2nd page, 3rd paragraph) that in order to correct the identified (single) deficiency in the petition, the claim 1 of the application must be amended to include a certain further limitation from the corresponding granted UK patent application. The required amendment is done via this Amendment.

Accordingly, the Applicant believes that the PPH petition is now allowable, and a decision to grant the petition is respectfully requested. If the Petitions Examiner believes that for any reason direct contact would help making the petition to grantable, the Examiner is encouraged to telephone the undersigned at the number given below.

Respectfully submitted,
MARK SANDSTROM

Dated: February 16, 2012

By: /Mark H. Sandstrom/

Mark H. Sandstrom
Inventor / Applicant
Tel: 201 696 7097

UNITED STATES PATENT AND TRADEMARK OFFICE

Commissioner for Patents
United States Patent and Trademark Office
P.O. Box 1450

MAILED
MAR 12 2012
OFFICE OF PETITIONS

**Sandstrom, Mark Henrik**
**344 Grove Street**
**#242**
**Jersey City NJ 07302**

In re Application of
Mark Henrik SANDSTROM
Application No. 12/982,826
Filed: December 30, 2010
Atty. Docket No.: 66938
For: SYSTEM AND METHOD FOR MAXIMIZING DATA PROCESSING THROUGHPUT VIA APPLICATION LOAD ADAPTIVE SCHEDULING AND CONTENT SWITCHING

: DECISION ON REQUEST TO
: PARTICIPATE IN PCT-PPH PROGRAM
: AND PETITION TO MAKE SPECIAL
: UNDER 37 CFR 1.102(a)

This is a decision on the renewed request to participate in the PCT Patent Prosecution Highway (PCT-PPH) program and the petition under 37 CFR 1.102(a), filed February 16, 2012, to make the above-identified application special.

The request and petition are **GRANTED.**

A grantable request to participate in the PCT –PPH program and petition to make special under 37 CFR 1.102(a) require:

(1) the U.S. application must have an eligible relationship to one or more PCT application where the ISA or IPEA are the JPO, EPO, KIPO, IPAU, Russia, Spain, Finland, Austria, or USPTO;

(2) at least one claim in the PCT application has novelty, inventive step, and industrial applicability and must be free of any observations in Box VIII in the latest work product in the international stage or applicant must identify and explain why the claim(s) is/are not subject to the observation in Box VIII;

(3) applicant must submit a copy of the claim(s) from the PCT application(s) that have novelty, inventive step, and industrial applicability along with an English translation thereof and a statement that the English translation is accurate, if the claims are not in the English language;

(4) all the claims in the U.S. application must sufficiently correspond or be amended to sufficiently correspond to the claim(s) that have novelty, inventive step, and industrial applicability in the PCT application(s);

(5) examination of the U.S. application has not begun;

(6) applicant must submit a copy of the latest international work product from the PCT application indicating that the claim(s) have novelty, inventive step, and industrial applicability along with an English translation thereof;

(7) applicant must submit an IDS listing the documents cited by the PCT examiner in the international work product along with copies of documents except U.S. patents or U.S. patent application publications; and

(8) applicant is required to submit a claims correspondence table in English which indicates how all the claims in the U.S. application correspond to the claims indicated as having novelty, inventive step, and industrial applicability in the latest international work product.

The request to participate in the PCT-PPH program and petition comply with the above requirements. Accordingly, the above-identified application has been accorded "special" status.

Telephone inquiries concerning this decision should be directed to Robert DeWitty, Petitions Attorney, Office of Petitions (571-272-8427). All other inquiries concerning the examination or status of the application is accessible in the PAIR system at http://www.uspto.gov/ebc.index.html.

This application will be forwarded to Technology Center Art Unit 2196 for action commensurate with this decision.

David Bucci
Petitions Examiner
Office of Petitions

UNITED STATES PATENT AND TRADEMARK OFFICE

UNITED STATES DEPARTMENT OF COMMERCE
United States Patent and Trademark Office
Address: COMMISSIONER FOR PATENTS
P.O. Box 1450
Alexandria, Virginia 22313-1450
www.uspto.gov

| APPLICATION NO. | FILING DATE | FIRST NAMED INVENTOR | ATTORNEY DOCKET NO. | CONFIRMATION NO. |
|---|---|---|---|---|
| 12/982,832 | 12/30/2010 | Matthew R. Perkins | AWP-036 | 9136 |

53014 7590 03/14/2011
Clause Eight Intell. Prop. Service
P.O Box 131270
Carlsbad, CA 92013

| EXAMINER |
|---|
| ZIMMERMAN, BRIAN A |

| ART UNIT | PAPER NUMBER |
|---|---|
| 2612 | |

| MAIL DATE | DELIVERY MODE |
|---|---|
| 03/14/2011 | PAPER |

**Please find below and/or attached an Office communication concerning this application or proceeding.**

The time period for reply, if any, is set in the attached communication.

UNITED STATES PATENT AND TRADEMARK OFFICE

Commissioner for Patents
United States Patent and Trademark Office
P.O. Box 1450
Alexandria, VA 22313-1450
www.uspto.gov

MAIL

MAR 14 2011

DIRECTOR'S OFFICE
TECHNOLOGY CENTER 2600

Clause Eight Intell. Prop. Service
P.O Box 131270
Carlsbad CA 92013

In re Application of:
PERKINS, MATTHEW R.
Serial No.: 12/982,832
Filed: December 30, 2010

Title: **WIRELESS TRACKING SYSTEM AND METHOD FOR BACKHAUL OF INFORMATION**

DECISION ON PETITION TO MAKE SPECIAL FOR NEW APPLICATION UNDER 37 C.F.R. § 1.102 & M.P.E.P. § 708.02

This is a decision on the petition filed on December 30, 2010 to make the above-identified application special for accelerated examination procedure under 37 C.F.R. § 1.102(d).

The petition to make the application special is **DISMISSED**.

## REGULATION AND PRACTICE

A grantable petition to make special under 37 C.F.R. § 1.102(d) and pursuant to the "Change to Practice for Petitions in Patent Applications to Make Special and for Accelerated Examination" published in the Federal Register on June 26, 2006 (71 Fed. Reg. 36323), must satisfy the following conditions:

I. Conditions Regarding the Application:

1. the application must be a non-reissue utility or design application filed under 37 CFR 1.111(a);
2. the application, the petition and the required fees must be filed electronically using the USPTO's electronic filing system (EFS), or EFS-web; if not filed electronically, a statement asserting that EFS and EFS-web were not available during the normal business hours.
3. at the time of filing, the application must be complete under 37 CFR 1.51 and in condition for examination;
4. the application must contain three or fewer independent claims and twenty or fewer total claims and the claims must be directed to a single invention.

II. Conditions Regarding the Petition:

The petition must:

1. be filed with the application;

2. include a statement that applicant agrees not to separately argue the patentability of any independent claim during any appeal in the application;

3. include a statement that applicant agrees to make an election without traverse in a telephone interview.

4. include a statement that applicant agrees to conduct such an interview when requested by the examiner.

5. include a statement, made based on a good faith belief, that a preexamination search in compliance with the following requirements, was conducted, including an identification of the filed of search by United States class and subclass, where applicable, and for database searches, the search logic or chemical structure or sequence used as a query, the name of the file(s) searched and the database service, and the date of the search.

The preexamination search must:

5.1 involve U.S. patents and patent application publications, foreign patent documents, and non-patent literature, unless the applicant can justify with reasonable certainty that no references more pertinent than those already identified are likely to be found in the eliminated sources and includes such a justification with this statement;

5.2. be directed to the claimed invention and encompass all of the features of the claims, giving the claims the broadest reasonable interpretation;

5.3. encompass the disclosed features that may be claimed.

6. must provide in support of the petition an accelerated examination support document. An accelerated examination support document must include:

6.1. an information disclosure statement (IDS) in compliance with 37 CFR 1.98 citing each reference deemed most closely related to the subject matter of each of the claims;

6.2. an identification of all the limitations in the claims that are disclosed by the reference specifying where the limitation is disclosed in the cited reference;

6.3. a detailed explanation of how each of the claims are patentable over the references cited with particularity required by 37 CFR 1.111(b) and (c);

6.4. a concise statement of the utility of the invention as defined in each of the independent claims (unless the application is a design application);

6.5. a showing of where each limitation of the claims finds support under 35 USC 112, first paragraph, in the written description of the specification. If applicable, the showing must also identify: (1) each means- (or step) plus-function claim element that invokes consideration under 35 USC 112, sixth paragraph; and (2) the structure, material, or acts in the specification that corresponds to each means- (or step) plus-function claim element that invokes consideration under 35 USC 112, sixth paragraph; if the application claims the benefit of one or more applications under title 35, United States Code, the showing must also include where each limitation of the claims finds support under 35 USC 112, first paragraph, in each such application in which such supports exists;

6.6. an identification of any cited references that may be disqualified under 35 USC 103(c).

## REVIEW OF FACTS

The conditions set forth under section I. above are considered to have been met. However, the petition fails to comply with conditions set forth under section II. Items 5-5.3 and 6.5.

Regarding the requirement in item 5 - 5.3 above, the preexamination search document provided with the instant petition is deficient as follows: The search submitted by applicant is too narrow. A complete search should also include:

A search in Class/subclass:

340/539.11, 539.12, and 539.13

If any request for reconsideration is filed, an updated preexamination search must be conducted as per item 5.1 above, and the Preexamination Search Document must be amended to indicate such; a new Information Disclosure Statement should be filed to cite any newly found prior art, and the Accelerated Examination Support Document must also be amended to include the necessary reference and discussion of any newly found and cited prior art in accordance with all of items 6 through 6.6 above.

Regarding the requirement in item 6.5 above, the "Accelerated Examination Support Document", is deficient because it fails to include a showing of where ***each limitation of the claims*** finds support under the first paragraph of 35 USC 112 in the written description of ***each benefit application***. As set forth supra, "*if the application claims the benefit of one or more applications under title 35, United States Code, the showing must also include where each limitation of the claims finds support under 35 USC 112, first paragraph,* ***in each such application in which such supports exists***". It is noted, the instant application also claims benefit to parent application 12/899,913. The petitioner has not provided a showing of support for this benefit application. Therefore, an updated accelerated examination support document must be provided which shows where each limitation of the claims finds support in this benefit application as well. Correction is required.

## DECISION

For the above-stated reasons, the petition is **dismissed**. The application will therefore be taken up by the examiner for action in its regular turn.

Petitioner is given a single opportunity to perfect the petition. Any request for reconsideration of this decision must be submitted within 1 (one) month or 30 (thirty) days, whichever is longer, (no extension of time under 37 CFR 1.136(a)) from the date of this decision in order to be

considered timely. Any request for reconsideration must address the deficiencies indicated above.

Petitioner is reminded that, upon granting of the special status of the application on request for reconsideration, the application will be processed expeditiously. However, due to the dismissal of the instant petition, examination may not be completed within twelve months of the filing date of the application.

Any inquiry regarding this decision should be directed to Michael Horabik, Quality Assurance Specialist, at (571) 272-3068.

/Michael Horabik/

Michael Horabik
Quality Assurance Specialist
Technology Center 2600
Communications

UNITED STATES PATENT AND TRADEMARK OFFICE

UNITED STATES DEPARTMENT OF COMMERCE
United States Patent and Trademark Office
Address: COMMISSIONER FOR PATENTS
P.O. Box 1450
Alexandria, Virginia 22313-1450
www.uspto.gov

| APPLICATION NO. | FILING DATE | FIRST NAMED INVENTOR | ATTORNEY DOCKET NO. | CONFIRMATION NO. |
|---|---|---|---|---|
| 12/982,832 | 12/30/2010 | Matthew R. Perkins | AWP-036 | 9136 |

53014 7590 04/29/2011
Clause Eight Intell. Prop. Service
P.O Box 131270
Carlsbad, CA 92013

| EXAMINER |
|---|
| ZIMMERMAN, BRIAN A |

| ART UNIT | PAPER NUMBER |
|---|---|
| 2612 | |

| MAIL DATE | DELIVERY MODE |
|---|---|
| 04/29/2011 | PAPER |

**Please find below and/or attached an Office communication concerning this application or proceeding.**

The time period for reply, if any, is set in the attached communication.

United States Patent and Trademark Office

~~Commissioner for Patents~~
United States Patent and Trademark Office
P.O. Box 1450
Alexandria, VA 22313-1450
www.uspto.gov

MAIL

APR 29 2011

DIRECTOR'S OFFICE
TECHNOLOGY CENTER 2600

Clause Eight Intell. Prop. Service
P.O Box 131270
Carlsbad CA 92013

In re Application of:
PERKINS, MATTHEW R.
Serial No.: 12/982,832
Filed: December 30, 2010
Attorney Docket No: AWP-036
Title: **WIRELESS TRACKING SYSTEM AND METHOD FOR BACKHAUL OF INFORMATION**

DECISION ON PETITION TO MAKE SPECIAL FOR NEW APPLICATION UNDER 37 C.F.R. § 1.102 & M.P.E.P. § 708.02

This is a decision on the petition filed on April 14, 2011 requesting reconsideration to make the above-identified application special for accelerated examination procedure under 37 C.F.R. § 1.102(d).

All of the requirements to correct the deficiencies outlined in the petition decision mailed March 14, 2011 have been met.

The petition to make the application special is **GRANTED**.

The application is eligible for accelerated examination and the petition complies with the conditions for granting the application special status pursuant to the "Change to Practice for Petitions in Patent Applications to Make Special and for Accelerated Examination" published June 26, 2006, in the Federal Register. (71 Fed. Reg. 36323).

The prosecution of the instant application will be conducted expeditiously according to the following guidelines.

1. The application will be docketed to an examiner and taken up for action within two weeks of the date of this decision.

2. Restriction Practice:
   If the examiner determines that the claims are not directed to a single invention, a telephone request to elect one single invention will be made pursuant to MPEP 812.01. As a prerequisite to the grant of this petition, the applicant has agreed to make an oral election, by telephone, without traverse. If the applicant refuses to make an election without traverse, or the examiner cannot reach the applicant after a reasonable effort, the

examiner will treat the first claimed invention (invention defined by claim 1) as having being constructively elected without traverse for examination.

3. Office action:
If it is determined that, after appropriate consultation, there is a potential rejection or any other issue to be addressed, the examiner will telephone the applicant and arrange an interview to discuss and resolve the issue. An Office action, other than a Notice of Allowance and Fee(s) Due (Notice of Allowance), will not be issued unless either: 1) an interview was conducted but did not result in agreed to action that places the application in condition for allowance, or, 2) a determination is made that an interview would be unlikely to result in the application being placed in condition for allowance, and 3) an internal conference has been held to review any rejection of any claim.

4. Time for Reply:
An Office action other than a Notice of Allowance or a final Office action will set a shortened statutory period of one month or thirty days, whichever is longer, for reply with no extension of time available under 37 CFR 1.136(a). Failure to timely file a reply within this non-extendible period for reply will result in the abandonment of the application.

5. Reply by Applicant:
A timely reply to an Office action other than the Notice of Allowance must be submitted electronically via EFS or EFS-web and limited to addressing the rejections, objections and requirement made. Any amendment that attempts to: 1) add claims which would result in more than three pending independent claims or more than twenty pending total claims; 2) present claims not encompassed by the pre-examination search or an updated accelerated examination support document; or 3) present claims that are directed a non-elected invention or an invention other than that previously claimed and examined in the application, will be treated as not fully responsive and will not be entered.

   For any amendment to the claims (including any new claim) that is not encompassed by the accelerated examination support document, applicant must provide an updated accelerated examination support document that encompasses the amended or new claims at the time of filing of the amendment.

   To proceed expeditiously with the examination, it is recommended that a reply with amendments made to any claim or with any new claim being added be accompanied by an updated accelerated examination support document or a statement explaining how the amended or new claim is supported by the original accelerated examination support document.

6. Information Disclosure Statement (IDS):
Any IDS filed during prosecution must be submitted electronically via EFS or EFS-web, accompanied by an updated accelerated examination support document, and be in compliance with 37 CFR 1.97 and 1.98.

7. Post-Allowance Processing:
To expedite processing of the allowed application into a patent, the applicant must: 1) pay the required fees within one month of the date of the Notice of Allowance, and 2) not

file any post allowance papers not required by the Office. In no event may the issue fee be paid and accepted later than three months from the date of the Notice of Allowance.

8. After-Final and Appeal Procedures:
   To expedite prosecution, after receiving the final Office action, applicant must: 1) promptly file a notice of appeal, an appeal brief and appeal fees; and 2) not request a pre-appeal brief conference.

   Any amendment, affidavit or other evidence filed after final Office action must comply with applicable rules and the requirements outlined in numbered paragraphs 5 and 6 above.

   On appeal, the application will proceed according to normal appeal procedures. After appeal, the application will again be treated special.

9. Proceedings Outside the Normal Examination Process:
   If the application becomes involved in a proceeding that is outside the normal examination process (e.g., a secrecy order, national security review, interference proceeding, petitions under 37 CFR 1.181, 182 or 183), the application will be treated special before and after such proceeding.

10. Final Disposition:
    The twelve month goal of this accelerated examination procedure ends with a final disposition. The mailing of a final Office action, a Notice of Allowance, the filing of a Notice of Appeal, or the filing of a Request for Continued Examination (RCE) is the final disposition.

If, during prosecution, a paper is not filed electronically using EFS-web, a reply is filed but is not fully responsive, the application is involved in an appeal or a proceeding outside normal examination process, the application will still be examined expeditiously, however, the final disposition may occur more than twelve months from the filing of the application.

Any inquiry regarding this decision should be directed to Michael Horabik, Quality Assurance Specialist, at (571) 272-3068.

/Michael Horabik/

Michael Horabik
Quality Assurance Specialist
Technology Center 2600
Communications

UNITED STATES PATENT AND TRADEMARK OFFICE

Commissioner for Patents
United States Patent and Trademark Office
P.O. Box 1450
Alexandria, VA 22313-1450
www.uspto.gov

Clause Eight Intell. Prop. Service
P.O Box 131270
Carlsbad CA 92013

Mail Date: March 30, 2011

In re Application of: Brady et al.
Application No.: 12/982864
Filed: December 30, 2010
Title: MONITORING DEVICE FOR AN INTERACTIVE GAME

DECISION ON PETITION TO MAKE SPECIAL FOR NEW APPLICATION UNDER 37 C.F.R. § 1.102 & M.P.E.P. § 708.02

This is a decision on the petition filed on December 30, 2010 to make the above-identified application special for accelerated examination procedure under 37 C.F.R. § 1.102(d).

The petition to make the application special is **DISMISSED**.

REGULATION AND PRACTICE

A grantable petition to make special under 37 C.F.R. § 1.102(d) and pursuant to the "Change to Practice for Petitions in Patent Applications to Make Special and for Accelerated Examination" published in the Federal Register on June 26, 2006 (71 Fed. Reg. 36323), must satisfy the following conditions:

I. Conditions Regarding the Application:

1. the application must be a non-reissue utility or design application filed under 37 CFR 1.111(a);
2. the application, the petition and the required fees must be filed electronically using the USPTO's electronic filing system (EFS), or EFS-web; if not filed electronically, a statement asserting that EFS and EFS-web were not available during the normal business hours.
3. at the time of filing, the application must be complete under 37 CFR 1.51 and in condition for examination;
4. the application must contain three or fewer independent claims and twenty or fewer total claims and the claims must be directed to a single invention.

II. Conditions Regarding the Petition:

The petition must:

1. be filed with the application;
2. include a statement that applicant agrees not to separately argue the patentability of any independent claim during any appeal in the application;

3. include a statement that applicant agrees to make an election without traverse in a telephone interview.

4. include a statement that applicant agrees to conduct such an interview when requested by the examiner.

5. include a statement, made based on a good faith belief, that a preexamination search in compliance with the following requirements, was conducted, including an identification of the field of search by United States class and subclass, where applicable, and for database searches, the search logic or chemical structure or sequence used as a query, the name of the file(s) searched and the database service, and the date of the search.

The preexamination search must:

5.1 involve U.S. patents and patent application publications, foreign patent documents, and non-patent literature, unless the applicant can justify with reasonable certainty that no references more pertinent than those already identified are likely to be found in the eliminated sources and includes such a justification with this statement;

5.2. be directed to the claimed invention and encompass all of the features of the claims, giving the claims the broadest reasonable interpretation;

5.3. encompass the disclosed features that may be claimed.

6. must provide in support of the petition an accelerated examination support document. An accelerated examination support document must include:

6.1. an information disclosure statement (IDS) in compliance with 37 CFR 1.98 citing each reference deemed most closely related to the subject matter of each of the claims;

6.2. an identification of all the limitations in the claims that are disclosed by the reference specifying where the limitation is disclosed in the cited reference;

6.3. a detailed explanation of how each of the claims are patentable over the references cited with particularity required by 37 CFR 1.111(b) and (c);

6.4. a concise statement of the utility of the invention as defined in each of the independent claims (unless the application is a design application);

6.5. a showing of where each limitation of the claims finds support under 35 U.S.C. 112, first paragraph, in the written description of the specification. If applicable, the showing must also identify: (1) each means- (or step) plus-function claim element that invokes consideration under 35 U.S.C. 112, sixth paragraph; and (2) the structure, material, or acts in the specification that corresponds to each means- (or step) plus-function claim element that invokes consideration under 35 U.S.C. 112, sixth paragraph; if the application claims the benefit of one or more applications under title 35, United States Code, the showing must also include where each limitation of the claims finds support under 35 U.S.C. 112, first paragraph, in each such application in which such supports exists;

6.6. an identification of any cited references that may be disqualified under 35 U.S.C. 103(c).

## REVIEW OF FACTS

The conditions I:1-4, II: 1-5, 5.3, 6, 6.1- 6.6 above are considered to have been met. However, the petition fails to comply with conditions II : 5.1 and 5.2 above. Therefore, the petition fails to

meet the required conditions to be accorded special status under the accelerated examination procedure.

**Discussion**

When referring to "the petition" hereinbelow, the received papers under consideration include the PTO/SB/28 form, the "pre-examination search document"; the "accelerated examination support document", and an Information Disclosure Statement including form PTO/SB/08A.

Regarding the requirements of section II element 5.1 and 5.2 outlined above, it appears the search outlined in the petition omitted a critical search area by not searching in class 463 subclass 39 and class 600 subclasses 485-489, 491, 493-499, 501, 502.

Applicant is reminded that should any closer prior art be found, an updated accelerated examination support document must be submitted.

DECISION

For the above-stated reasons, the petition is **dismissed**. The application will therefore be taken up by the examiner for action in its regular turn.

Petitioner is given a single opportunity to perfect the petition. Any request for reconsideration of this decision must be submitted within 1 (one) month or 30 (thirty) days, whichever is longer, (no extension of time under 37 CFR 1.136(a)) from the date of this decision in order to be considered timely. Any request for reconsideration must address all of the deficiencies indicated above.

Petitioner is reminded that, upon granting of the special status of the application on request for reconsideration, the application will be processed expeditiously. However, due to the dismissal of the instant petition, examination may not be completed within twelve months of the filing date of the application.

Any inquiry regarding this decision should be directed to Linda J. Sholl, TC 3700 Special Programs Examiner, at (571) 272-4391.

/Linda J. Sholl/
Linda J. Sholl
Special Programs Examiner
Technology Center 3700

UNITED STATES PATENT AND TRADEMARK OFFICE

Commissioner for Patents
United States Patent and Trademark Office
P.O. Box 1450
Alexandria, VA 22313-1450
www.uspto.gov

Clause Eight Intell. Prop. Service
P.O Box 131270
Carlsbad CA 92013

MAY 02 2011

In re Application of: Brady et al.
Application No.: 12/982864
Filed: December 30, 2010
Title: MONITORING DEVICE FOR AN INTERACTIVE GAME

DECISION ON PETITION TO MAKE SPECIAL FOR NEW APPLICATION UNDER 37 C.F.R. § 1.102 & M.P.E.P. § 708.02

This is a decision on the renewed petition filed on April 29, 2011 to make the above-identified application special for accelerated examination procedure under 37 C.F.R. § 1.102(d).

The petition to make the application special is GRANTED.

The application is eligible for accelerated examination and the petition complies with the conditions for granting the application special status pursuant to the "Change to Practice for Petitions in Patent Applications to Make Special and for Accelerated Examination" published June 26, 2006, in the Federal Register. (71 Fed. Reg. 36323).

The prosecution of the instant application will be conducted expeditiously according to the following guidelines.

1. The application will be docketed to an examiner and taken up for action within two weeks of the date of this decision.

2. Restriction Practice:
   If the examiner determines that the claims are not directed to a single invention, a telephone request to elect one single invention will be made pursuant to MPEP 812.01. As a prerequisite to the grant of this petition, the applicant has agreed to make an oral election, by telephone, without traverse. If the applicant refuses to make an election without traverse, or the examiner cannot reach the applicant after a reasonable effort, the examiner will treat the first claimed invention (invention defined by claim 1) as having being constructively elected without traverse for examination.

3. Office action:
   If it is determined that, after appropriate consultation, there is a potential rejection or any other issue to be addressed, the examiner will telephone the applicant and arrange an interview to discuss and resolve the issue. An Office action, other than a Notice of Allowance and Fee(s) Due (Notice of Allowance), will not be issued unless either: 1) an interview was conducted but did not result in agreed to action that places the application in condition for allowance, or, 2) a determination is made that an interview would be unlikely to result in the application being placed in condition for allowance, and 3) an internal conference has been held to review any rejection of any claim.

4. Time for Reply:
   An Office action other than a Notice of Allowance or a final Office action will set a shortened statutory period of one month or thirty days, whichever is longer, for reply with no extension of time available under 37 CFR 1.136(a). Failure to timely file a reply within this non-extendible period for reply will result in the abandonment of the application.

5. Reply by Applicant:
   A timely reply to an Office action other than the Notice of Allowance must be submitted electronically via EFS or EFS-web and limited to addressing the rejections, objections and requirement made. Any amendment that attempts to: 1) add claims which would result in more than three pending independent claims or more than twenty pending total claims; 2) present claims not encompassed by the pre-examination search or an updated accelerated examination support document; or 3) present claims that are directed a non-elected invention or an invention other than that previously claimed and examined in the application, will be treated as not fully responsive and will not be entered.

   For any amendment to the claims (including any new claim) that is not encompassed by the accelerated examination support document, applicant must provide an updated accelerated examination support document that encompasses the amended or new claims at the time of filing of the amendment.

   To proceed expeditiously with the examination, it is recommended that a reply with amendments made to any claim or with any new claim being added be accompanied by an updated accelerated examination support document or a statement explaining how the amended or new claim is supported by the original accelerated examination support document.

6. Information Disclosure Statement (IDS):
   Any IDS filed during prosecution must be submitted electronically via EFS or EFS-web, accompanied by an updated accelerated examination support document, and be in compliance with 37 CFR 1.97 and 1.98.

7. Post-Allowance Processing:
   To expedite processing of the allowed application into a patent, the applicant must: 1) pay the required fees within one month of the date of the Notice of Allowance, and 2) not file any post allowance papers not required by the Office. In no event may the issue fee be paid and accepted later than three months from the date of the Notice of Allowance.

8. After-Final and Appeal Procedures:
   To expedite prosecution, after receiving the final Office action, applicant must: 1) promptly file a notice of appeal, an appeal brief and appeal fees; and 2) not request a pre-appeal brief conference.

   Any amendment, affidavit or other evidence filed after final Office action must comply with applicable rules and the requirements outlined in numbered paragraphs 5 and 6 above.

   On appeal, the application will proceed according to normal appeal procedures. After appeal, the application will again be treated special.

9. Proceedings Outside the Normal Examination Process:
   If the application becomes involved in a proceeding that is outside the normal examination process (e.g., a secrecy order, national security review, interference proceeding, petitions under 37 CFR 1.181, 182 or 183), the application will be treated special before and after such proceeding.

10. Final Disposition:
    The twelve month goal of this accelerated examination procedure ends with a final disposition. The mailing of a final Office action, a Notice of Allowance, the filing of a Notice of Appeal, or the filing of a Request for Continued Examination (RCE) is the final disposition.

If, during prosecution, a paper is not filed electronically using EFS-web, a reply is filed but is not fully responsive, the application is involved in an appeal, or a proceeding outside normal examination process, the application will still be examined expeditiously, however, the final disposition may occur more than twelve months from the filing of the application.

Any inquiry regarding this decision should be directed to Linda Sholl at (571) 272-4391

/Linda Sholl/
Linda Sholl
Special Programs Examiner
Technology Center 3700

UNITED STATES PATENT AND TRADEMARK OFFICE

Commissioner for Patents
United States Patent and Trademark Office
P.O. Box 1450
Alexandria, VA 22313-1450
www.uspto.gov

In re Application of
Frederic McCurdy

Application No. 12982936

Filed: December 31,2010

Attorney Docket No.

:DECISION ON PETITION TO MAKE SPECIAL
:UNDER 37 CFR 1.102(c)(1)

This is a decision on the electronic petition under 37 CFR 1.102 (c)(1), filed 14-JAN-2011 to make the above-identified application special based on applicant's age as set forth in MPEP § 708.02, Section IV.

The petition is **GRANTED**.

A grantable petition to make an application special under 37 CFR 1.102(c)(1), MPEP § 708.02, Section IV: Applicant's Age must include a statement by applicant or a registered practitioner having evidence that applicant is at least 65 years of age. No fee is required.

Accordingly, the above-identified application has been accorded "special" status and will be taken up for action by the examiner upon the completion of all pre-examination processing.

Telephone inquiries concerning this electronic decision should be directed to the Electronic Business Center at 866-217-9197.

All other inquiries concerning either the examination or status of the application should be directed to the Technology Center.

UNITED STATES PATENT AND TRADEMARK OFFICE

UNITED STATES DEPARTMENT OF COMMERCE
United States Patent and Trademark Office
Address: COMMISSIONER FOR PATENTS
P.O. Box 1450
Alexandria, Virginia 22313-1450
www.uspto.gov

| APPLICATION NO. | FILING DATE | FIRST NAMED INVENTOR | ATTORNEY DOCKET NO. | CONFIRMATION NO. |
|---|---|---|---|---|
| 12/983,034 | 12/31/2010 | Kazuhiko Yoshizawa | 16869N-071021US | 9485 |

20350 7590 03/03/2011
KILPATRICK TOWNSEND & STOCKTON LLP
TWO EMBARCADERO CENTER
EIGHTH FLOOR
SAN FRANCISCO, CA 94111-3834

| EXAMINER |
|---|

| ART UNIT | PAPER NUMBER |
|---|---|
| 2614 | |

| NOTIFICATION DATE | DELIVERY MODE |
|---|---|
| 03/03/2011 | ELECTRONIC |

**Please find below and/or attached an Office communication concerning this application or proceeding.**

The time period for reply, if any, is set in the attached communication.

Notice of the Office communication was sent electronically on above-indicated "Notification Date" to the following e-mail address(es):

Docket@kilpatricktownsend.com
ipefiling@kilpatricktownsend.com
jlhice@kilpatrick.foundationip.com

UNITED STATES PATENT AND TRADEMARK OFFICE

Commissioner for Patents
United States Patent and Trademark Office
P.O. Box 1450
Alexandria, VA 22313-1450
www.uspto.gov

KILPATRICK TOWNSEND & STOCKTON LLP
TWO EMBARCADERO CENTER
EIGHTH FLOOR
SAN FRANCISCO CA 94111-3834

| | | |
|---|---|---|
| In re Application of | : | |
| YOSHIZAWA, KAZUHIKO et al | : | DECISION ON REQUEST TO |
| Application No. 12/983,034 | : | PARTICIPATE IN PATENT |
| Filed: December 31, 2010 | : | PROSECUTION HIGHWAY |
| Attorney Docket No. 16869N-071021US | : | PROGRAM AND PETITION |
| | : | TO MAKE SPECIAL UNDER |
| | : | 37 CFR 1.102(a) |

This is a decision on the request to participate in the Patent Prosecution Highway (PPH) program and the petition under 37 CFR 1.102(a), filed January 27, 2011, to make the above-identified application special.

The request and petition are **DISMISSED**.

A grantable request to participate in the PPH program and petition to make special require:

(1) The U.S. application must validly claim priority under 35 U.S.C. 119(a) to one or more applications filed in the JPO;
(2) Applicant must submit a copy of the allowable/patentable claim(s) from the JPO application(s) along with an English translation thereof and a statement that the English translation is accurate;
(3) All the claims in the U.S. application must sufficiently correspond or be amended to sufficiently correspond to the allowable/patentable claim(s) in the JPO application(s);
(4) Examination of the U.S. application has not begun;
(5) Applicant must submit a copy of all the office actions from each of the JPO application(s) containing the allowable/patentable claim(s) along with an English translation thereof and a statement that the English translation is accurate; and
(6) Applicant must submit an IDS listing the documents cited by the JPO examiner in the JPO office action along with copies of documents except U.S. patents or U.S. patent application publications.

The request to participate in the PPH program and petition is deficient as follows:

Petitioner has not complied with item 2 in that although a translation of the claims from the JPO application containing the allowable/patentable claims has been submitted, the petition fails to include a copy of the actual allowable/patentable claims from the JPO application No. 2009-255676.

Applicant is given a time period of **ONE MONTH or THIRTY DAYS**, whichever is longer, from the mailing date of this decision to correct the deficiencies. **NO EXTENSION OF TIME UNDER 37 CFR 1.136 IS PERMITTED.** If the deficiencies are not corrected with the time period given, the application will await action in its regular turn.

Any response must be submitted via EFS-web.

Telephone inquiries concerning this decision should be directed to Michael Horabik at 571-272-3068.

All other inquiries concerning the examination or status of the application should be directed to Patent Application Information Retrieval (PAIR) system.

/Michael Horabik/

Michael Horabik
Quality Assurance Specialist
Technology Center 2600
Communications

UNITED STATES PATENT AND TRADEMARK OFFICE

UNITED STATES DEPARTMENT OF COMMERCE
United States Patent and Trademark Office
Address: COMMISSIONER FOR PATENTS
P.O. Box 1450
Alexandria, Virginia 22313-1450
www.uspto.gov

| APPLICATION NO. | FILING DATE | FIRST NAMED INVENTOR | ATTORNEY DOCKET NO. | CONFIRMATION NO. |
|---|---|---|---|---|
| 12/983,034 | 12/31/2010 | Kazuhiko Yoshizawa | 86889-797037(071021US) | 9485 |

20350 7590 05/27/2011
KILPATRICK TOWNSEND & STOCKTON LLP
TWO EMBARCADERO CENTER
EIGHTH FLOOR
SAN FRANCISCO, CA 94111-3834

| EXAMINER |
|---|

| ART UNIT | PAPER NUMBER |
|---|---|
| 2614 | |

| NOTIFICATION DATE | DELIVERY MODE |
|---|---|
| 05/27/2011 | ELECTRONIC |

**Please find below and/or attached an Office communication concerning this application or proceeding.**

The time period for reply, if any, is set in the attached communication.

Notice of the Office communication was sent electronically on above-indicated "Notification Date" to the following e-mail address(es):

Docket@kilpatricktownsend.com
ipefiling@kilpatricktownsend.com
jlhice@kilpatrick.foundationip.com

UNITED STATES PATENT AND TRADEMARK OFFICE

Commissioner for Patents
United States Patent and Trademark Office
P.O. Box 1450
Alexandria, VA 22313-1450
www.uspto.gov

KILPATRICK TOWNSEND & STOCKTON LLP
TWO EMBARCADERO CENTER
EIGHTH FLOOR
SAN FRANCISCO CA 94111-3834

| | | |
|---|---|---|
| In re Application of | : | |
| YOSHIZAWA, KAZUHIKO et al | : | DECISION ON REQUEST TO |
| Application No. 12/983,034 | : | PARTICIPATE IN PATENT |
| Filed: December 31, 2010 | : | PROSECUTION HIGHWAY |
| Attorney Docket No. 86889-797037(071021US) | : | PROGRAM AND PETITION |
| | : | TO MAKE SPECIAL UNDER |
| | : | 37 CFR 1.102(a) |

This is a decision on the request to participate in the Patent Prosecution Highway (PPH) program and the petition under 37 CFR 1.102(a), filed May 16, 2011, to make the above-identified application special.

The request and petition are **DENIED**.

In the petition decision mailed March 3, 2011, applicant was given a time period of ONE MONTH or THIRTY DAYS, whichever was longer, from the mailing date of the decision to correct the deficiencies. NO EXTENSION OF TIME UNDER 37 CFR 1.136 WAS PERMITTED. If the deficiencies were not corrected with the time period given, the application would await action in its regular turn. On May 16, 2011, petitioner attempted to perfect the petition. The time period for response of ONE MONTH or THIRTY DAYS, whichever is longer, clearly has elapsed. Therefore, petition is **denied** as untimely.

Accordingly, the application will be docketed for examination in its regular turn.

Any inquiry regarding this decision should be directed to Michael Horabik, Quality Assurance Specialist, at (571) 272-3068.

/Michael Horabik/

Michael Horabik
Quality Assurance Specialist
Technology Center 2600
Communications

UNITED STATES PATENT AND TRADEMARK OFFICE

UNITED STATES DEPARTMENT OF COMMERCE
United States Patent and Trademark Office
Address: COMMISSIONER FOR PATENTS
P.O. Box 1450
Alexandria, Virginia 22313-1450
www.uspto.gov

| APPLICATION NO. | FILING DATE | FIRST NAMED INVENTOR | ATTORNEY DOCKET NO. | CONFIRMATION NO. |
|---|---|---|---|---|
| 12/983,034 | 12/31/2010 | Kazuhiko Yoshizawa | 86889-797037(071021US) | 9485 |

20350 7590 10/26/2011
KILPATRICK TOWNSEND & STOCKTON LLP
TWO EMBARCADERO CENTER
EIGHTH FLOOR
SAN FRANCISCO, CA 94111-3834

| EXAMINER |
|---|

| ART UNIT | PAPER NUMBER |
|---|---|
| 2614 | |

| NOTIFICATION DATE | DELIVERY MODE |
|---|---|
| 10/26/2011 | ELECTRONIC |

**Please find below and/or attached an Office communication concerning this application or proceeding.**

The time period for reply, if any, is set in the attached communication.

Notice of the Office communication was sent electronically on above-indicated "Notification Date" to the following e-mail address(es):

Docket@kilpatricktownsend.com
ipefiling@kilpatricktownsend.com
jlhice@kilpatrick.foundationip.com

UNITED STATES PATENT AND TRADEMARK OFFICE

Commissioner for Patents
United States Patent and Trademark Office
P.O. Box 1450
Alexandria, VA 22313-1450
www.uspto.gov

**KILPATRICK TOWNSEND &
STOCKTON LLP
TWO EMBARCADERO CENTER
EIGHTH FLOOR
SAN FRANCISCO CA 94111-3834**

| | |
|---|---|
| **In re Application of** | **: DECISION ON REQUEST TO** |
| **YOSHIZAWA et al.** | **: PARTICIPATE IN THE PATENT** |
| **Application No.: 12/983,034** | **: PROSECUTION HIGHWAY** |
| **Filed: 31 December 2010** | **: PROGRAM AND PETITION** |
| **Attorney Docket No.: 86889-797037(071021US)** | **: TO MAKE SPECIAL UNDER** |
| **For: SOUND PROCESSING UNIT, SOUND PROCESSING SYSTEM, AUDIO OUTPUT UNIT AND DISPLAY DEVICE** | **: 37 CFR 1.102(a)** |

This is a decision on the request to participate in the Patent Prosecution Highway (PPH) program and the petition under 37 CFR 1.102(a), filed 07 October 2011, to make the above-identified application special.

The request and petition are **DENIED**.

**Discussion**

A petition for participation in the PPH program was previously filed on 27 January 2011. The petition was dismissed on 03 March 2011. Applicant filed a renewed petition outside of the period for response and the petition was denied on 27 May 2011.

As set forth in the PPH agreement with the JPO, in instances where a request for participation in the PPH program does not meet all the requirements, the applicant will be notified and the defects in the request will be identified. The applicant will be given **one** opportunity to perfect the request in a renewed request for participation. If not perfected, the applicant will be notified and the application will await action in its regular turn.

Since applicant has already had one opportunity to perfect the request for participation in the PPH program, the instant petition must be DENIED and the application will be taken up in its regular turn

No further consideration of this matter will be undertaken.

Telephone inquiries concerning this decision should be directed to Lee W. Young at 571-272-4549.

Lee W. Young
Quality Assurance Specialist
Technology Center 2600

UNITED STATES PATENT AND TRADEMARK OFFICE

UNITED STATES DEPARTMENT OF COMMERCE
United States Patent and Trademark Office
Address: COMMISSIONER FOR PATENTS
P.O. Box 1450
Alexandria, Virginia 22313-1450
www.uspto.gov

| APPLICATION NO. | FILING DATE | FIRST NAMED INVENTOR | ATTORNEY DOCKET NO. | CONFIRMATION NO. |
|---|---|---|---|---|
| 12/983,036 | 12/31/2010 | Shuju Fan | HW 0989399AE | 9489 |

74365 7590 03/11/2011
Slater & Matsil, L.L.P.
17950 Preston Road, Suite 1000
Dallas, TX 75252

| EXAMINER |
|---|
| CHAUDRY, MUJTABA M |

| ART UNIT | PAPER NUMBER |
|---|---|
| 2112 | |

| NOTIFICATION DATE | DELIVERY MODE |
|---|---|
| 03/11/2011 | ELECTRONIC |

**Please find below and/or attached an Office communication concerning this application or proceeding.**

The time period for reply, if any, is set in the attached communication.

Notice of the Office communication was sent electronically on above-indicated "Notification Date" to the following e-mail address(es):

docketing@slater-matsil.com

UNITED STATES PATENT AND TRADEMARK OFFICE

Commissioner for Patents
United States Patent and Trademark Office
P.O. Box 1450
Alexandria, VA 22313-1450
www.uspto.gov

SLATER & MATSIL, L.L.P.
17950 PRESTON ROAD
SUITE 1000
DALLAS, TX 75252

| | |
|---|---|
| In re Application of: Fan, et al.<br>Serial No.: 12/983,036<br>Filed: December 31, 2010<br>Docket: HW 0989399AE<br>Title: SIGNAL ENCODING METHOD AND DEVICE, METHOD FOR ENCODING JOINT FEEDBACK SIGNAL | DECISION ON PETITION TO MAKE SPECIAL FOR NEW APPLICATION UNDER 37 C.F.R. § 1.102 & M.P.E.P. § 708.02 |

This is a decision on the petition filed on December 31, 2010 to make the above-identified application special for accelerated examination procedure under 37 C.F.R. § 1.102(d).

The petition to make the application special is **DISMISSED**.

REGULATION AND PRACTICE

A grantable petition to make special under 37 C.F.R. § 1.102(d) and pursuant to the "Change to Practice for Petitions in Patent Applications to Make Special and for Accelerated Examination" published in the Federal Register on June 26, 2006 (71 Fed. Reg. 36323), must satisfy the following conditions:

I. Conditions Regarding the Application:

1. the application must be a non-reissue utility or design application filed under 37 CFR 1.111(a);

2. the application, the petition and the required fees must be filed electronically using the USPTO's electronic filing system (EFS), or EFS-web; if not filed electronically, a statement asserting that EFS and EFS-web were not available during the normal business hours.

3. at the time of filing, the application must be complete under 37 CFR 1.51 and in condition for examination;

4. the application must contain three or fewer independent claims and twenty or fewer total claims and the claims must be directed to a single invention.

II. Conditions Regarding the Petition:

The petition must:

1. be filed with the application;

2. include a statement that applicant agrees that the dependent claims will be grouped together with and not to separately argue the patentability of any independent claim from which they depend during any appeal in the application;

3. include a statement that applicant agrees to make an election without traverse in a telephone interview.

4. include a statement that applicant agrees to conduct such an interview when requested by the examiner.

5. include a statement, made based on a good faith belief, that a preexamination search in compliance with the following requirements, was conducted, including an identification of the field of search by United States class and subclass, where applicable, and for database searches, the search logic or chemical structure or sequence used as a query, the name of the file(s) searched and the database service, and the date of the search.

The preexamination search must:

5.1 involve U.S. patents and patent application publications, foreign patent documents, and non-patent literature, unless the applicant can justify with reasonable certainty that no references more pertinent than those already identified are likely to be found in the eliminated sources and includes such a justification with this statement;

5.2. be directed to the claimed invention and encompass all of the features of the claims, giving the claims the broadest reasonable expectation;

5.3. encompass the disclosed features that may be claimed.

6. must provide in support of the petition an accelerated examination support document. An accelerated examination support document must include:

6.1. an information disclosure statement (IDS) in compliance with 37 CFR 1.98 citing each reference deemed most closely related to the subject matter of each of the claims;

6.2. an identification of all the limitations in the claims that are disclosed by the reference specifying where the limitation is disclosed in the cited reference;

6.3. a detailed explanation of how each of the claims are patentable over the references cited with particularity required by 37 CFR 1.111(b) and (c);

6.4. a concise statement of the utility of the invention as defined in each of the independent claims (unless the application is a design application);

6.5. a showing of where each limitation of the claims finds support under 35 USC 112, first paragraph, in the written description of the specification. If applicable, the showing must also identify: (1) each means- (or step) plus-function claim element that invokes consideration under 35 UDC 112, sixth paragraph; and (2) the structure, material, or acts in the specification that corresponds to each means- (or step) plus-function claim element that invokes consideration under 35 USC 112, sixth paragraph; if the application claims the benefit of one or more applications under title 35, United States Code, the showing must also include where each limitation of the claims finds support under 35 USC 112, first paragraph, in each such application in which such supports exists;

6.6. an identification of any cited references that may be disqualified under 35 USC 103(c).

REVIEW OF FACTS

The conditions I. 1-4 & II. 1-5, 5.1, 6.3-6.4 & 6.6 above are considered to have been met. However, the petition fails to comply with conditions II. 5.2, 5.3, 6.1, 6.2 & 6.5 above. Therefore, the petition fails to meet the required conditions to be accorded special status under the accelerated examination procedure.

Regarding the requirement of MPEP § 708.02(a)(I.)(H)[1] and items 5.2 - 5.3 above, the preexam search must be directed to the (instant) claimed invention and encompass all of the disclosed features of the (instant) claims. In addition, the preexam search must include all pertinent databases.

Specifically and with respect to items 5.2 - 5.3 above, Petitioner should identify whether the text search logic identified in the instant petition was utilized in combination with the field of search (i.e. class/subclasses as identified on page 2 of the instant petition)or separate therefrom (i.e. state whether or not the identified subclasses were searched in their entirety). In addition, based upon the claimed subject matter of the instant application, a search in the following class and subclass is necessary in order to provide full coverage of where the most pertinent references are most likely to be found: 714/749 (Retransmission if no ACK returned). Further, the IEEE database has not been identified as having been searched and would be a necessary search for the pending instant claims.

The additional search areas and search recommendations were confirmed with and recommended by a (primary) examiner in the pertinent art area.

With regard to the requirement of MPEP § 708.02(a)(I.)(I)(1) and item 6.1 above, form PTO-1449 attached with the instant petition cites a total of ten references and the instant petition specifically discusses all of those cited references. However, Petitioner also cites an additional form PTO-1449 on Dec.31, 2010 and is required to discuss all 15 cited references deemed to be most closely related to the subject matter. However, applicant is PERMITTED to respond by identifying that the "IDS filed with the instant petition citing 10 references and discussed within the petition are those references deemed to be in support of the petition and that the additional IDS filed on Dec. 31, 2010 as those references deemed to be NOT in support", if that is in fact the case.

With regard to the requirement of MPEP § 708.02(a)(I)(2) and item 6.2 above, Petitioner should provide a detailed discussion of each current and/or any newly cited reference(s), identifying subject matter by way of figure, page, paragraph and line numbers, as appropriate, as they pertain ***to the instant claim limitations*** (claims 1-10) of the instant application. Note that petitioner merely provides a brief discussion of what the references provide, but does not relate that discussion (of what is taught) to the language found in the instant claims.

[1] MPEP 8th ed. rev 5 August 2006

With respect to the requirement of MPEP § 708.02(a)(I.)(I)(5) and item 6.5 above, Petitioner fails to identify where each limitation of the instant claims finds support under 35 USC 112, first paragraph, in the written description of the specification. Support for each limitation of each pending claim must be proper identified. Specifically,

The instant application, SN 12/983,036, is a continuation-in-part of parent application **PCT/CN2009/071639, filed 05/05/2009 is a continuation in part of PCT/CN2009/070623, filed 03/03/2009 is a continuation in part of PCT/CN2009/070805, filed 03/16/2009.**

In accord to the requirement of 6.5, since this application claims the benefit of the above identified parent applications, under title 35, United States Code 120 (see Declaration filed 12/31/10), the showing must also include where each limitation of the claims finds support under 35 USC 112, first paragraph, **in each such application in which such supports exists.** Since Applicant has specifically claimed priority benefit to these parent applications, Applicant is not entitled to state "Applicant will not attempt to utilize the benefit of these filing dates for the presently pending claims. As a result, no table for support is provided for these applications (page 32/33 of AE Support Document) in order to avoid this requirement. A showing of support under 35 USC 112, first paragraph, is required for **PCT/CN2009/070623 and PCT/CN2009/070805.**

Thus, the petition does not meet the conditions II. 5.2, 5.3, 6.1, 6.2 and 6.5 above.

DECISION

For the above-stated reasons, the petition is **DISMISSED**. The application will therefore be taken up by the examiner for action in its regular turn.

Petitioner is given ***a single opportunity*** to perfect the petition. Any request for reconsideration of this decision must be submitted within 1 (one) month or 30 (thirty) days, whichever is longer; (no extension of time under 37 CFR 1.136(a) is permitted) from the date of this decision in order to be considered timely. Any request for reconsideration ***must fully address all of the deficiencies indicated above***. [emphasis added]

Petitioner is reminded that, upon granting of the special status of the application on request for reconsideration, the application will be processed expeditiously. However, due to the dismissal of the instant petition, examination may not be completed within twelve months of the filing date of the application.

Any inquiry regarding this decision should be directed to Brian Johnson, Quality Assurance Specialist, at (571) 272-3595.

Brian L. Johnson
Quality Assurance Specialist, WG 2110
Technology Center 2100

UNITED STATES PATENT AND TRADEMARK OFFICE

UNITED STATES DEPARTMENT OF COMMERCE
United States Patent and Trademark Office
Address: COMMISSIONER FOR PATENTS
P.O. Box 1450
Alexandria, Virginia 22313-1450
www.uspto.gov

| APPLICATION NO. | FILING DATE | FIRST NAMED INVENTOR | ATTORNEY DOCKET NO. | CONFIRMATION NO. |
|---|---|---|---|---|
| 12/983,036 | 12/31/2010 | Shuju Fan | HW 0989399AE | 9489 |

74365 7590 04/15/2011
Slater & Matsil, L.L.P.
17950 Preston Road, Suite 1000
Dallas, TX 75252

| EXAMINER |
|---|
| CHAUDRY, MUJTABA M |

| ART UNIT | PAPER NUMBER |
|---|---|
| 2112 | |

| NOTIFICATION DATE | DELIVERY MODE |
|---|---|
| 04/15/2011 | ELECTRONIC |

**Please find below and/or attached an Office communication concerning this application or proceeding.**

The time period for reply, if any, is set in the attached communication.

Notice of the Office communication was sent electronically on above-indicated "Notification Date" to the following e-mail address(es):

docketing@slater-matsil.com

UNITED STATES PATENT AND TRADEMARK OFFICE

Commissioner for Patents
United States Patent and Trademark Office
P.O. Box 1450
Alexandria, VA 22313-1450
www.uspto.gov

SLATER & MATSIL, L.L.P.
17950 PRESTON ROAD
SUITE 1000
DALLAS, TX 75252

| | |
|---|---|
| In re Application of: **FAN**, et al.<br>Serial No.: 12/983,036<br>Filed: December 31, 2010<br>Docket: HW 0989399AE<br>Title: **SIGNAL ENCODING METHOD AND DEVICE, METHOD FOR ENCODING JOINT FEEDBACK SIGNAL** | DECISION ON PETITION TO MAKE SPECIAL FOR NEW APPLICATION UNDER 37 C.F.R. § 1.102 & M.P.E.P. § 708.02 |

This is a decision on the renewed petition filed on April 11, 2011 to make the above- identified application special for accelerated examination procedure under 37 C.F.R. § 1.102(d).

The original petition, submitted on December 31, 2010 was dismissed in the decision mailed on March 11, 2011.

The petition to make the application special is **GRANTED**.

The application is eligible for accelerated examination and the petition complies with the conditions for granting the application special status pursuant to the "Change to Practice for Petitions in Patent Applications to Make Special and for Accelerated Examination" published June 26, 2006, in the Federal Register. (71 Fed. Reg. 36323).

The prosecution of the instant application will be conducted expeditiously according to the following guidelines.

1. The application will be docketed to an examiner and taken up for action within two weeks of the date of this decision.

2. Restriction Practice:

If the examiner determines that the claims are not directed to a single invention, a telephone request to elect one single invention will be made pursuant to MPEP 812.01. As a prerequisite to the grant of this petition, the applicant has agreed to make an oral election, by telephone, without traverse. If the applicant refuses to make an election without traverse, or the examiner cannot reach the applicant after a reasonable effort, the examiner will treat the first claimed invention

(invention defined by claim 1) as having being constructively elected without traverse for examination.

3. Office action:
   If it is determined that, after appropriate consultation, there is a potential rejection or any other issue to be addressed, the examiner will telephone the applicant and arrange an interview to discuss and resolve the issue. An Office action, other than a Notice of Allowance and Fee(s) Due (Notice of Allowance), will not be issued unless either: 1) an interview was conducted but did not result in agreed to action that places the application in condition for allowance, or, 2) a determination is made that an interview would be unlikely to result in the application being placed in condition for allowance, and 3) an internal conference has been held to review any rejection of any claim.

4. Time for Reply:
   An Office action other than a Notice of Allowance or a final Office action will set a shortened statutory period of one month or thirty days, whichever is longer, for reply with no extension of time available under 37 CFR 1.136(a). Failure to timely file a reply within this non-extendible period for reply will result in the abandonment of the application.

5. Reply by Applicant:
   A timely reply to an Office action other than the Notice of Allowance must be submitted electronically via EFS or EFS-web and limited to addressing the rejections, objections and requirement made. Any amendment that attempts to: 1) add claims which would result in more than three pending independent claims or more than twenty pending total claims; 2) present claims not encompassed by the pre-examination search or an updated accelerated examination support document; or 3) present claims that are directed a non-elected invention or an invention other than that previously claimed and examined in the application, will be treated as not fully responsive and will not be entered.

   For any amendment to the claims (including any new claim) that is not encompassed by the accelerated examination support document, applicant must provide an updated accelerated examination support document that encompasses the amended or new claims at the time of filing of the amendment.

   To proceed expeditiously with the examination, it is recommended that a reply with amendments made to any claim or with any new claim being added be accompanied by an updated accelerated examination support document or a statement explaining how the amended or new claim is supported by the original accelerated examination support document.

6. Information Disclosure Statement (IDS):
   Any IDS filed during prosecution must be submitted electronically via EFS or EFS-web, accompanied by an updated accelerated examination support document, and be in compliance with 37 CFR 1.97 and 1.98.

7. Post-Allowance Processing:
   To expedite processing of the allowed application into a patent, the applicant must: 1) pay the required fees within one month of the date of the Notice of Allowance, and 2) not file any post allowance papers not required by the Office. In no event may the issue fee be paid and accepted later than three months from the date of the Notice of Allowance.

8. After-Final and Appeal Procedures:
   To expedite prosecution, after receiving the final Office action, applicant must: 1) promptly file a notice of appeal, an appeal brief and appeal fees; and 2) not request a pre-appeal brief conference.

   Any amendment, affidavit or other evidence filed after final Office action must comply with applicable rules and the requirements outlined in numbered paragraphs 5 and 6 above.

   On appeal, the application will proceed according to normal appeal procedures. After appeal, the application will again be treated special.

9. Proceedings Outside the Normal Examination Process:
   If the application becomes involved in a proceeding that is outside the normal examination process (e.g., a secrecy order, national security review, interference proceeding, petitions under 37 CFR 1.181, 182 or 183), the application will be treated special before and after such proceeding.

10. Final Disposition:
    The twelve-month goal of this accelerated examination procedure ends with a final disposition. The mailing of a final Office action, a Notice of Allowance, the filing of a Notice of Appeal, or the filing of a Request for Continued Examination (RCE) is the final disposition.

If, during prosecution, a paper is not filed electronically using EFS-web, a reply is filed but is not fully responsive, the application is involved in an appeal, or a proceeding outside normal examination process, the application will still be examined expeditiously, however, the final disposition may occur more than twelve months from the filing of the application. In addition, Applicant is reminded that due to the dismissal of the previous petition submission, examination may not be completed within twelve months of the filing date of the application.

Any inquiry regarding this decision should be directed to Brian Johnson, Quality Assurance Specialist, at (571) 272-3595. If attempts to reach the undersigned by telephone are unsuccessful, Kakali Chaki, Quality Assurance Specialist, can be reached at (571) 272-3719.

Brian Johnson, Quality Assurance Specialist
Technology Center 2100

UNITED STATES PATENT AND TRADEMARK OFFICE

Commissioner for Patents
United States Patent and Trademark Office
P.O. Box 1450
Alexandria, VA 22313-1450
www.uspto.gov

Decision Date : September 16,2011

In re Application of :

Walter Presz

Application No : 12983066

Filed : 31-Dec-2010

Attorney Docket No : FDWT 200039US01

DECISION ON REQUEST TO WITHDRAW AS ATTORNEY/AGENTOF RECORD

This is an electronic decision on the Request to Withdraw as attorney or agent of record under 37 CFR § 1.36(b), filed September 16,2011

The request is **APPROVED.**

The request was signed by Richard M. Klein (registration no. 33000 ) on behalf of all attorneys/agents associated with Customer Number 27885 . All attorneys/agents associated with Cusotmer Number 27885 have been withdrawn.

Since there are no remaining attorneys of record, all future communications from the Office will be directed to the first named inventor or assignee that has properly made itself of record pursuant to 37 CFR 3.71, with correspondence address:

| | |
|---|---|
| Name | FloDesign Wind Turbine Corp. |
| Name2 | |
| Address 1 | 380 Main Street |
| Address 2 | |
| City | Wilbraham |
| State | MA |
| Postal Code | 01095 |
| Country | US |

As a reminder, requester is required to inform the first named inventor or assignee that has properly made itself of record pursuant to 37 CFR 3.71 of the electronically processed petition.

Telephone inquiries concerning this decision should be directed to the Patent Electronic Business Center (EBC) at 866-217-9197.

Office of Petitions

| | |
|---|---|
| **Doc Code: PET.AUTO**<br>**Document Description: Petition automatically granted by EFS-Web** | PTO/SB/83<br>U.S. Patent and Trademark Office<br>Department of Commerce |

| | |
|---|---|
| Electronic Petition Request | **REQUEST FOR WITHDRAWAL AS ATTORNEY OR AGENT AND CHANGE OF CORRESPONDENCE ADDRESS** |
| Application Number | 12983066 |
| Filing Date | 31-Dec-2010 |
| First Named Inventor | Walter Presz |
| Art Unit | 3745 |
| Examiner Name | |
| Attorney Docket Number | FDWT 200039US01 |
| Title | FLUID TURBINE WITH EJECTOR SHROUD |

◉ Please withdraw me as attorney or agent for the above identified patent application and the practitioners of record associated with Customer Number: 27885

The reason(s) for this request are those described in 37 CFR:

10.40(c)(5)

Certifications

☒ I/We have given reasonable notice to the client, prior to the expiration of the response period, that the practitioner(s) intend to withdraw from employment

☒ I/We have delivered to the client or a duly authorized representative of the client all papers and property (including funds) to which the client is entitled

☒ I/We have notified the client of any responses that may be due and the time frame within which the client must respond

Change the correspondence address and direct all future correspondence to the first named inventor or assignee that has properly made itself of record pursuant to 37 CFR 3.71:

| | |
|---|---|
| Name | FloDesign Wind Turbine Corp. |
| Address | 380 Main Street |
| City | Wilbraham |
| State | MA |
| Postal Code | 01095 |
| Country | US |

| I am authorized to sign on behalf of myself and all withdrawing practitioners. | |
|---|---|
| Signature | / Richard M. Klein / |
| Name | Richard M. Klein |
| Registration Number | 33000 |

UNITED STATES PATENT AND TRADEMARK OFFICE

UNITED STATES DEPARTMENT OF COMMERCE
United States Patent and Trademark Office
Address: COMMISSIONER FOR PATENTS
P.O. Box 1450
Alexandria, Virginia 22313-1450
www.uspto.gov

| APPLICATION NO. | FILING DATE | FIRST NAMED INVENTOR | ATTORNEY DOCKET NO. | CONFIRMATION NO. |
|---|---|---|---|---|
| 12/983,076 | 12/31/2010 | Jiangshui He | HW 81304142AE | 9557 |

74365 7590 05/26/2011
Slater & Matsil, L.L.P.
17950 Preston Road, Suite 1000
Dallas, TX 75252

| EXAMINER |
|---|
| HWANG, JOON H |

| ART UNIT | PAPER NUMBER |
|---|---|
| 2447 | |

| NOTIFICATION DATE | DELIVERY MODE |
|---|---|
| 05/26/2011 | ELECTRONIC |

**Please find below and/or attached an Office communication concerning this application or proceeding.**

The time period for reply, if any, is set in the attached communication.

Notice of the Office communication was sent electronically on above-indicated "Notification Date" to the following e-mail address(es):

docketing@slater-matsil.com

UNITED STATES PATENT AND TRADEMARK OFFICE

Commissioner for Patents
United States Patent and Trademark Office
P.O. Box 1450
Alexandria, VA 22313-1450
okwww.uspto.gov

MAILED

MAY 25 2011
DIRECTOR OFFICE
TECHNOLOGY CENTER 2400

Ira S. Matsil
SLATER & MATSIL, L.L.P.
17950 Preston Road, Suite 1000
Dallas TX 75252

In re Application of: HE, Jiangshui
Serial No.: **12/983,076**
Filed: December 31, 2010
Atty Docket No: HW 81304142AE
Title: METHOD AND APPARATUS FOR IMPLEMENTING A PREDETERMINED OPERATION IN DEVICE MANAGEMENT

DECISION ON PETITION TO MAKE SPECIAL FOR NEW APPLICATION UNDER 37 C.F.R. § 1.102 & M.P.E.P. § 708.02

This is a decision on the petition filed on **December 31, 2010** to make the above-identified application special for accelerated examination procedure under 37 C.F.R. § 1.102(d).

The petition to make the application special is **GRANTED.**

The application is eligible for accelerated examination and the renewed petition complies with the conditions for granting the application special status pursuant to the "Change to Practice for Petitions in Patent Applications to Make Special and for Accelerated Examination" published June 26, 2006, in the Federal Register. (71 Fed. Reg. 36323).

The prosecution of the instant application will be conducted expeditiously according to the following guidelines.

1. The application will be docketed to an examiner and taken up for action within two weeks of the date of this decision.

2. Restriction Practice:
If the examiner determines that the claims are not directed to a single invention, a telephone request to elect one single invention will be made pursuant to MPEP 812.01. As a prerequisite to the grant of this petition, the applicant has agreed to make an oral election, by telephone, without traverse. If the applicant refuses to make an election without traverse, or the examiner cannot reach the applicant after a reasonable effort, the examiner will treat the first claimed invention (invention defined by claim 1) as having being constructively elected without traverse for examination.

3. Office action:
If it is determined that, after appropriate consultation, there is a potential rejection or any other issue to be addressed, the examiner will telephone the applicant and arrange an interview to discuss and resolve the issue. An Office action, other than a Notice of Allowance and Fee(s) Due (Notice of Allowance), will not be issued unless either: 1) an interview was conducted but did not result in agreed to action that places the application in condition for allowance, or, 2) a determination is made that an interview would be unlikely to result in the application being placed in condition for allowance, and 3) an internal conference has been held to review any rejection of any claim.

4. Time for Reply:
An Office action other than a Notice of Allowance or a final Office action will set a shortened statutory period of one month or thirty days, whichever is longer, for reply with no extension of time available under 37 CFR 1.136(a). Failure to timely file a reply within this non-extendible period for reply will result in the abandonment of the application.

5. Reply by Applicant:
A timely reply to an Office action other than the Notice of Allowance must be submitted electronically via EFS or EFS-web and limited to addressing the rejections, objections and requirement made. Any amendment that attempts to: 1) add claims which would result in more than three pending independent claims or more than twenty pending total claims; 2) present claims not encompassed by the pre-examination search or an updated accelerated examination support document; or 3) present claims that are directed a non-elected invention or an invention other than that previously claimed and examined in the application, will be treated as not fully responsive and will not be entered.

For any amendment to the claims (including any new claim) that is not encompassed by the accelerated examination support document, applicant must provide an updated accelerated examination support document that encompasses the amended or new claims at the time of filing of the amendment.

To proceed expeditiously with the examination, it is recommended that a reply with amendments made to any claim or with any new claim being added be accompanied by an updated accelerated examination support document or a statement explaining how the amended or new claim is supported by the original accelerated examination support document.

6. Information Disclosure Statement (IDS):
Any IDS filed during prosecution must be submitted electronically via EFS or EFS-web, accompanied by an updated accelerated examination support document, and be in compliance with 37 CFR 1.97 and 1.98.

7. Post-Allowance Processing:

To expedite processing of the allowed application into a patent, the applicant must: 1) pay the required fees within one month of the date of the Notice of Allowance, and 2) not file any post allowance papers not required by the Office. In no event may the issue fee be paid and accepted later than three months from the date of the Notice of Allowance.

8. After-Final and Appeal Procedures:
To expedite prosecution, after receiving the final Office action, applicant must: 1) promptly file a notice of appeal, an appeal brief and appeal fees; and 2) not request a pre-appeal brief conference. Any amendment, affidavit or other evidence filed after final Office action must comply with applicable rules and the requirements outlined in numbered paragraphs 5 and 6 above. On appeal, the application will proceed according to normal appeal procedures. After appeal, the application will again be treated special.

9. Proceedings Outside the Normal Examination Process:
If the application becomes involved in a proceeding that is outside the normal examination process (e.g., a secrecy order, national security review, interference proceeding, petitions under 37 CFR 1.181, 182 or 183), the application will be treated special before and after such proceeding.

10. Final Disposition:
The twelve month goal of this accelerated examination procedure ends with a final disposition. The mailing of a final Office action, a Notice of Allowance, the filing of a Notice of Appeal, or the filing of a Request for Continued Examination (RCE) is the final disposition. If, during prosecution, a paper is not filed electronically using EFS-web, a reply is filed but is not fully responsive, the application is involved in an appeal, or a proceeding outside normal examination process, the application will still be examined expeditiously, however, the final disposition may occur more than twelve months from the filing of the application.

Any inquiry regarding this decision should be directed to Beatriz Prieto, Quality Assurance Specialist, at (571) 272-3902. A second point of Contact is Kim Huynh at (571)-272-4147.

/Beatriz Prieto/

Beatriz Prieto, Quality Assurance Specialist
Technology Center 2400
**Networking, Multiplexing, Cable and Security**

| | |
|---|---|
| **Doc Code: PET.AUTO**<br>**Document Description: Petition automatically granted by EFS-Web** | PTO/SB/83<br>U.S. Patent and Trademark Office<br>Department of Commerce |

| | |
|---|---|
| Electronic Petition Request | **REQUEST FOR WITHDRAWAL AS ATTORNEY OR AGENT AND CHANGE OF CORRESPONDENCE ADDRESS** |
| Application Number | 12983082 |
| Filing Date | 31-Dec-2010 |
| First Named Inventor | Walter Presz |
| Art Unit | 3745 |
| Examiner Name | |
| Attorney Docket Number | FDWT 200038US02 |
| Title | FLUID TURBINE WITH SHROUD HAVING SEGMENTED LOBES |

◉ Please withdraw me as attorney or agent for the above identified patent application and the practitioners of record associated with Customer Number: 27885

The reason(s) for this request are those described in 37 CFR:

10.40(c)(5)

Certifications

☒ I/We have given reasonable notice to the client, prior to the expiration of the response period, that the practitioner(s) intend to withdraw from employment

☒ I/We have delivered to the client or a duly authorized representative of the client all papers and property (including funds) to which the client is entitled

☒ I/We have notified the client of any responses that may be due and the time frame within which the client must respond

Change the correspondence address and direct all future correspondence to the first named inventor or assignee that has properly made itself of record pursuant to 37 CFR 3.71:

| | |
|---|---|
| Name | FloDesign Wind Turbine Corp. |
| Address | 380 Main Street |
| City | Wilbraham |
| State | MA |
| Postal Code | 01095 |
| Country | US |

| I am authorized to sign on behalf of myself and all withdrawing practitioners. | |
|---|---|
| Signature | / Richard M. Klein / |
| Name | Richard M. Klein |
| Registration Number | 33000 |

UNITED STATES PATENT AND TRADEMARK OFFICE

Commissioner for Patents
United States Patent and Trademark Office
P.O. Box 1450
Alexandria, VA 22313-1450
www.uspto.gov

Decision Date : September 16,2011

In re Application of :

Walter Presz

Application No : 12983082

Filed : 31-Dec-2010

Attorney Docket No : FDWT 200038US02

DECISION ON REQUEST TO WITHDRAW AS ATTORNEY/AGENTOF RECORD

This is an electronic decision on the Request to Withdraw as attorney or agent of record under 37 CFR § 1.36(b), filed September 16,2011

The request is **APPROVED.**

The request was signed by Richard M. Klein (registration no. 33000 ) on behalf of all attorneys/agents associated with Customer Number 27885 . All attorneys/agents associated with Cusotmer Number 27885 have been withdrawn.

Since there are no remaining attorneys of record, all future communications from the Office will be directed to the first named inventor or assignee that has properly made itself of record pursuant to 37 CFR 3.71, with correspondence address:

| | |
|---|---|
| Name | FloDesign Wind Turbine Corp. |
| Name2 | |
| Address 1 | 380 Main Street |
| Address 2 | |
| City | Wilbraham |
| State | MA |
| Postal Code | 01095 |
| Country | US |

As a reminder, requester is required to inform the first named inventor or assignee that has properly made itself of record pursuant to 37 CFR 3.71 of the electronically processed petition.

Telephone inquiries concerning this decision should be directed to the Patent Electronic Business Center (EBC) at 866-217-9197.

Office of Petitions

UNITED STATES PATENT AND TRADEMARK OFFICE

UNITED STATES DEPARTMENT OF COMMERCE
United States Patent and Trademark Office
Address: COMMISSIONER FOR PATENTS
P.O. Box 1450
Alexandria, Virginia 22313-1450
www.uspto.gov

| APPLICATION NO. | FILING DATE | FIRST NAMED INVENTOR | ATTORNEY DOCKET NO. | CONFIRMATION NO. |
|---|---|---|---|---|
| 12/983,103 | 12/31/2010 | Yongxing Zhou | HW 0912427AE | 9613 |

74365 7590 04/19/2011
Slater & Matsil, L.L.P.
17950 Preston Road, Suite 1000
Dallas, TX 75252

| EXAMINER |
|---|
| WANG, TED M |

| ART UNIT | PAPER NUMBER |
|---|---|
| 2611 | |

| NOTIFICATION DATE | DELIVERY MODE |
|---|---|
| 04/19/2011 | ELECTRONIC |

**Please find below and/or attached an Office communication concerning this application or proceeding.**

The time period for reply, if any, is set in the attached communication.

Notice of the Office communication was sent electronically on above-indicated "Notification Date" to the following e-mail address(es):

docketing@slater-matsil.com

UNITED STATES PATENT AND TRADEMARK OFFICE

Commissioner for Patents
United States Patent and Trademark Office
P.O. Box 1450
Alexandria, VA 22313-1450
www.uspto.gov

Slater & Matsil, L.L.P.
17950 Preston Road, Suite 1000
Dallas TX 75252

In re Application of:
ZHOU, YONGXING, et al.
Serial No.: 12/983,103
Filed: December 31, 2010

Title: **METHOD, CODEBOOK, AND BASE STATION FOR PRECODING**

DECISION ON PETITION TO MAKE SPECIAL FOR NEW APPLICATION UNDER 37 C.F.R. § 1.102 & M.P.E.P. § 708.02

The petition to make the application special filed December 31, 2010 is **GRANTED**.

The application is eligible for accelerated examination and the petition complies with the conditions for granting the application special status pursuant to the "Change to Practice for Petitions in Patent Applications to Make Special and for Accelerated Examination" published June 26, 2006, in the Federal Register. (71 Fed. Reg. 36323).

The prosecution of the instant application will be conducted expeditiously according to the following guidelines.

1. The application will be docketed to an examiner and taken up for action within two weeks of the date of this decision.

2. Restriction Practice:
   If the examiner determines that the claims are not directed to a single invention, a telephone request to elect one single invention will be made pursuant to MPEP 812.01. As a prerequisite to the grant of this petition, the applicant has agreed to make an oral election, by telephone, without traverse. If the applicant refuses to make an election without traverse, or the examiner cannot reach the applicant after a reasonable effort, the examiner will treat the first claimed invention (invention defined by claim 1) as having being constructively elected without traverse for examination.

3. Office action:

If it is determined that, after appropriate consultation, there is a potential rejection or any other issue to be addressed, the examiner will telephone the applicant and arrange an interview to discuss and resolve the issue. An Office action, other than a Notice of Allowance and Fee(s) Due (Notice of Allowance), will not be issued unless either: 1) an interview was conducted but did not result in agreed to action that places the application in condition for allowance, or, 2) a determination is made that an interview would be unlikely to result in the application being placed in condition for allowance, and 3) an internal conference has been held to review any rejection of any claim.

4. Time for Reply:
An Office action other than a Notice of Allowance or a final Office action will set a shortened statutory period of one month or thirty days, whichever is longer, for reply with no extension of time available under 37 CFR 1.136(a). Failure to timely file a reply within this non-extendible period for reply will result in the abandonment of the application.

5. Reply by Applicant:
A timely reply to an Office action other than the Notice of Allowance must be submitted electronically via EFS or EFS-web and limited to addressing the rejections, objections and requirement made. Any amendment that attempts to: 1) add claims which would result in more than three pending independent claims or more than twenty pending total claims; 2) present claims not encompassed by the pre-examination search or an updated accelerated examination support document; or 3) present claims that are directed a non-elected invention or an invention other than that previously claimed and examined in the application, will be treated as not fully responsive and will not be entered.

   For any amendment to the claims (including any new claim) that is not encompassed by the accelerated examination support document, applicant must provide an updated accelerated examination support document that encompasses the amended or new claims at the time of filing of the amendment.

   To proceed expeditiously with the examination, it is recommended that a reply with amendments made to any claim or with any new claim being added be accompanied by an updated accelerated examination support document or a statement explaining how the amended or new claim is supported by the original accelerated examination support document.

6. Information Disclosure Statement (IDS):
Any IDS filed during prosecution must be submitted electronically via EFS or EFS-web, accompanied by an updated accelerated examination support document, and be in compliance with 37 CFR 1.97 and 1.98.

7. Post-Allowance Processing:
To expedite processing of the allowed application into a patent, the applicant must: 1) pay the required fees within one month of the date of the Notice of Allowance, and 2) not

file any post allowance papers not required by the Office. In no event may the issue fee be paid and accepted later than three months from the date of the Notice of Allowance.

8. After-Final and Appeal Procedures:
   To expedite prosecution, after receiving the final Office action, applicant must: 1) promptly file a notice of appeal, an appeal brief and appeal fees; and 2) not request a pre-appeal brief conference.

   Any amendment, affidavit or other evidence filed after final Office action must comply with applicable rules and the requirements outlined in numbered paragraphs 5 and 6 above.

   On appeal, the application will proceed according to normal appeal procedures. After appeal, the application will again be treated special.

9. Proceedings Outside the Normal Examination Process:
   If the application becomes involved in a proceeding that is outside the normal examination process (e.g., a secrecy order, national security review, interference proceeding, petitions under 37 CFR 1.181, 182 or 183), the application will be treated special before and after such proceeding.

10. Final Disposition:
    The twelve month goal of this accelerated examination procedure ends with a final disposition. The mailing of a final Office action, a Notice of Allowance, the filing of a Notice of Appeal, or the filing of a Request for Continued Examination (RCE) is the final disposition.

If, during prosecution, a paper is not filed electronically using EFS-web, a reply is filed but is not fully responsive, the application is involved in an appeal, or a proceeding outside normal examination process, the application will still be examined expeditiously, however, the final disposition may occur more than twelve months from the filing of the application.

Any inquiry regarding this decision should be directed to Ken Wieder, Quality Assurance Specialist, at (571) 272-2986.

/Kenneth A. Wieder/

Kenneth A. Wieder
Quality Assurance Specialist
Technology Center 2600
Communications

UNITED STATES PATENT AND TRADEMARK OFFICE

Commissioner for Patents
United States Patent and Trademark Office
P.O. Box 1450
Alexandria, VA 22313-1450
www.uspto.gov

MCCARTER & ENGLISH, LLP STAMFORD
CANTERBURY GREEN
201 BROAD STREET, 9TH FLOOR
STAMFORD, CT 06901

MAILED
NOV 08 2011
PCT LEGAL ADMINISTRATION

| | | |
|---|---|---|
| In re Application of COSTANTINI et al | : | |
| U.S. Application No.: 12/983,108 | : | |
| PCT Application No.: PCT/EP2009/058522 | : | |
| Int. Filing Date: 06 July 2009 | : | |
| Priority Date Claimed: 04 July 2008 | : | DECISION |
| Attorney Docket No.: 99759.00034 | : | |
| For: IDENTIFICATION AND ANALYSIS OF PERSISTENT SCATTERERS IN SERIES OF SAR IMAGES | : | |

This is in response to applicant's petition under 37 CFR 1.182 filed 22 September 2011.

## BACKGROUND

On 06 July 2009, applicant filed international application PCT/EP2009/058522, which claimed priority of an earlier European Patent Office application filed 04 July 2008. A copy of the international application was communicated to the USPTO from the International Bureau on 07 January 2010. The thirty-month period for paying the basic national fee in the United States expired on 04 January 2011.

On 31 December 2010, applicant filed purported national stage papers in the United States Designated/Elected Office (DO/EO/US) via the EFS-Web electronic filing system of the USPTO.

On 22 September 2011, applicant filed the present petition under 37 CFR 1.182.

## DISCUSSION

As evidenced by the EFS-Web Electronic Acknowledgement Receipt, the 31 December 2010 submission was identified as a filing under 35 U.S.C. 111(a).

MPEP 1893.03(a) specifies that "if there are any conflicting instructions as to whether the filing is under 35 U.S.C. 111(a) or 35 U.S.C. 371, the application will be accepted as filed under 35 U.S.C. 111(a)" in accordance with the notice at 1077 O.G. 13 (14 April 1987). In the present case, applicant's identification of the 31 December 2010 submission as a filing under 35 U.S.C. 111(a) was a conflicting instruction that was inconsistent with and contradicted any stated desire to enter the national phase under 35 U.S.C. 371. Accordingly, the present application was properly treated as an application under 35 U.S.C. 111(a), and the requested relief will not be granted. Applicant may wish to consider filing a petition under 37 CFR 1.78(a)(3) to add a benefit claim under 35 U.S.C. 120 and 365(c) to the international application.

## CONCLUSION

For the reasons above, the petition under 37 CFR 1.182 is DISMISSED without prejudice.

If reconsideration on the merits of the petition is desired, a proper response must be filed within TWO (2) MONTHS from the mail date of this decision. Extensions of time are available under 37 CFR 1.136(a). Any reconsideration request should include a cover letter entitled "Renewed Petition Under 37 CFR 1.182".

Any further correspondence with respect to this matter may be filed electronically via EFS-Web selecting the document description "Petition for review and processing by the PCT Legal Office" or by mail addressed to Mail Stop PCT, Commissioner for Patents, Office of PCT Legal Administration, P.O. Box 1450, Alexandria, Virginia 22313-1450, with the contents of the letter marked to the attention of the Office of PCT Legal Administration.

Bryan Lin
PCT Legal Examiner
PCT Legal Office

Telephone: 571-272-3303
Facsimile: 571-273-0459

UNITED STATES PATENT AND TRADEMARK OFFICE

Commissioner for Patents
United States Patent and Trademark Office
P.O. Box 1450
Alexandria, VA 22313-1450
www.uspto.gov

MCCARTER & ENGLISH, LLP STAMFORD
CANTERBURY GREEN
201 BROAD STREET, 9TH FLOOR
STAMFORD, CT 06901

**MAILED**
FEB 01 2012
PCT LEGAL ADMINISTRATION

| | | |
|---|---|---|
| In re Application of COSTANTINI et al | : | |
| U.S. Application No.: 12/983,108 | : | |
| PCT Application No.: PCT/EP2009/058522 | : | |
| Int. Filing Date: 06 July 2009 | : | |
| Priority Date Claimed: 04 July 2008 | : | DECISION |
| Attorney Docket No.: 99759.00034 | : | |
| For: IDENTIFICATION AND ANALYSIS OF PERSISTENT SCATTERERS IN SERIES OF SAR IMAGES | : | |

This is a decision on the petition under 37 CFR 1.78(a)(3), filed 03 January 2012, to accept an unintentionally delayed claim under 35 U.S.C. 120 and 365(c) for the benefit of priority to the prior-filed international application set forth in the amendment filed concurrently with the instant petition.

Under 37 CFR 1.78(a)(3), a petition to accept an unintentionally delayed claim under 35 U.S.C. 120, 121, or 365(c) for the benefit of a prior-filed application must be accompanied by:

(i) the reference required by 35 U.S.C. 120 and 37 CFR 1.78(a)(2) to the prior-filed application, unless previously submitted;

(ii) the surcharge set forth in 37 CFR 1.17(t); and

(iii) a statement that the entire delay between the date the claim was due under 37 CFR 1.78 (a)(2)(ii) and the date the claim was filed was unintentional. The Director may require additional information where there is a question whether the delay was unintentional.

With regard to item (i), the supplied reference does not properly state the relationship between present application and the international application. As set forth in MPEP 201.11, Section III A, the relationship between the applications is whether the instant application is a continuation, divisional, or continuation-in-part of the prior nonprovisional application. An example of a proper benefit claim is "this application is a continuation of Application No. ---, filed ---." A benefit claim that merely states that "this application claims the benefit of Application No. ---,

filed ---" does not comply with 35 U.S.C. 120 and 37 CFR 1.78(a)(2)(i), since the relationship between the applications is not stated.

With regard to item (ii), the surcharge set forth in 37 CFR 1.17(t) has been submitted.

With regard to item (iii), the petition contains a proper statement of unintentional delay.

For the reasons above, the petition under 37 CFR 1.78(a)(3) is **DISMISSED** without prejudice.

Any further correspondence with respect to this matter may be filed electronically via EFS-Web selecting the document description "Petition for review and processing by the PCT Legal Office" or by mail addressed to Mail Stop PCT, Commissioner for Patents, Office of PCT Legal Administration, P.O. Box 1450, Alexandria, Virginia 22313-1450, with the contents of the letter marked to the attention of the Office of PCT Legal Administration.

Bryan Lin
PCT Legal Examiner
PCT Legal Office

Telephone: 571-272-3303
Facsimile: 571-273-0459

UNITED STATES PATENT AND TRADEMARK OFFICE

Commissioner for Patents
United States Patent and Trademark Office
P.O. Box 1450
Alexandria, VA 22313-1450
www.uspto.gov

**MAILED**
APR 17 2012
PCT LEGAL ADMINISTRATION

MCCARTER & ENGLISH, LLP STAMFORD
CANTERBURY GREEN
201 BROAD STREET, 9TH FLOOR
STAMFORD, CT 06901

| | | |
|---|---|---|
| In re Application of COSTANTINI et al | : | |
| U.S. Application No.: 12/983,108 | : | |
| PCT Application No.: PCT/EP2009/058522 | : | |
| Int. Filing Date: 06 July 2009 | : | |
| Priority Date Claimed: 04 July 2008 | : | DECISION |
| Attorney Docket No.: 99759.00034 | : | |
| For: IDENTIFICATION AND ANALYSIS OF PERSISTENT SCATTERERS IN SERIES OF SAR IMAGES | : | |

This is a decision on the renewed petition under 37 CFR 1.78(a)(3), filed 23 March 2012, to accept an unintentionally delayed claim under 35 U.S.C. 120 and 365(c) for the benefit of priority to the prior-filed international application set forth in the amendment filed concurrently with the instant petition.

Under 37 CFR 1.78(a)(3), a petition to accept an unintentionally delayed claim under 35 U.S.C. 120, 121, or 365(c) for the benefit of a prior-filed application must be accompanied by:

(i) the reference required by 35 U.S.C. 120 and 37 CFR 1.78(a)(2) to the prior-filed application, unless previously submitted;

(ii) the surcharge set forth in 37 CFR 1.17(t); and

(iii) a statement that the entire delay between the date the claim was due under 37 CFR 1.78 (a)(2)(ii) and the date the claim was filed was unintentional. The Director may require additional information where there is a question whether the delay was unintentional.

With regard to item (i), the required reference has been furnished.

With regard to item (ii), the surcharge set forth in 37 CFR 1.17(t) has been submitted.

With regard to item (iii), the petition contains a proper statement of unintentional delay.

For the reasons above, the renewed petition under 37 CFR 1.78(a)(3) is **GRANTED**.

Applicant is advised that the granting of a petition under 37 CFR 1.78(a)(3) or the inclusion of a prior-filed application on any Filing Receipt should not be construed as meaning that the application is necessarily entitled to the benefit of the prior-filed application. In order for an application to be entitled to the benefit of the prior-filed application, all other requirements under 35 U.S.C. 120 and 37 CFR 1.78 must be met. The examiner will, in due course, determine whether this application is entitled to the benefit of an earlier filing date.

This matter is being referred to Technology Center Art Unit 3646 for appropriate action, including consideration by the examiner of applicant's entitlement to the benefit of priority under 35 U.S.C. 120 and 365(c) to the prior-filed nonprovisional application.

Bryan Lin

Bryan Lin
PCT Legal Examiner
PCT Legal Office

Telephone: 571-272-3303
Facsimile: 571-273-0459

ATTACHMENT: corrected filing receipt

UNITED STATES PATENT AND TRADEMARK OFFICE

Commissioner for Patents
United States Patent and Trademark Office
P.O. Box 1450
Alexandria, VA 22313-1450
www.uspto.gov

TREGO, HINES & LADENHEIM, PLLC
9300 HARRIS CORNERS PARKWAY
SUITE 210
CHARLOTTE NC 28269-3797

Mail Date: March 31, 2011

| | |
|---|---|
| In re Application of: Kellar et al.<br>Application No.: 12/983191<br>Filed: December 31, 2010<br>Title: PROSTHETIC KNEE JOINT | DECISION ON PETITION TO MAKE SPECIAL FOR NEW APPLICATION UNDER 37 C.F.R. § 1.102 & M.P.E.P. § 708.02 |

This is a decision on the petition filed on December 31, 2010 to make the above-identified application special for accelerated examination procedure under 37 C.F.R. § 1.102(d).

The petition to make the application special is **DISMISSED**.

REGULATION AND PRACTICE

A grantable petition to make special under 37 C.F.R. § 1.102(d) and pursuant to the "Change to Practice for Petitions in Patent Applications to Make Special and for Accelerated Examination" published in the Federal Register on June 26, 2006 (71 Fed. Reg. 36323), must satisfy the following conditions:

I. Conditions Regarding the Application:

1. the application must be a non-reissue utility or design application filed under 37 CFR 1.111(a);
2. the application, the petition and the required fees must be filed electronically using the USPTO's electronic filing system (EFS), or EFS-web; if not filed electronically, a statement asserting that EFS and EFS-web were not available during the normal business hours.
3. at the time of filing, the application must be complete under 37 CFR 1.51 and in condition for examination;
4. the application must contain three or fewer independent claims and twenty or fewer total claims and the claims must be directed to a single invention.

II. Conditions Regarding the Petition:

The petition must:

1. be filed with the application;
2. include a statement that applicant agrees not to separately argue the patentability of any independent claim during any appeal in the application;

3. include a statement that applicant agrees to make an election without traverse in a telephone interview.

4. include a statement that applicant agrees to conduct such an interview when requested by the examiner.

5. include a statement, made based on a good faith belief, that a preexamination search in compliance with the following requirements, was conducted, including an identification of the field of search by United States class and subclass, where applicable, and for database searches, the search logic or chemical structure or sequence used as a query, the name of the file(s) searched and the database service, and the date of the search.

The preexamination search must:

5.1 involve U.S. patents and patent application publications, foreign patent documents, and non-patent literature, unless the applicant can justify with reasonable certainty that no references more pertinent than those already identified are likely to be found in the eliminated sources and includes such a justification with this statement;

5.2. be directed to the claimed invention and encompass all of the features of the claims, giving the claims the broadest reasonable interpretation;

5.3. encompass the disclosed features that may be claimed.

6. must provide in support of the petition an accelerated examination support document. An accelerated examination support document must include:

6.1. an information disclosure statement (IDS) in compliance with 37 CFR 1.98 citing each reference deemed most closely related to the subject matter of each of the claims;

6.2. an identification of all the limitations in the claims that are disclosed by the reference specifying where the limitation is disclosed in the cited reference;

6.3. a detailed explanation of how each of the claims are patentable over the references cited with particularity required by 37 CFR 1.111(b) and (c);

6.4. a concise statement of the utility of the invention as defined in each of the independent claims (unless the application is a design application);

6.5. a showing of where each limitation of the claims finds support under 35 U.S.C. 112, first paragraph, in the written description of the specification. If applicable, the showing must also identify: (1) each means- (or step) plus-function claim element that invokes consideration under 35 U.S.C. 112, sixth paragraph; and (2) the structure, material, or acts in the specification that corresponds to each means- (or step) plus-function claim element that invokes consideration under 35 U.S.C. 112, sixth paragraph; if the application claims the benefit of one or more applications under title 35, United States Code, the showing must also include where each limitation of the claims finds support under 35 U.S.C. 112, first paragraph, in each such application in which such supports exists;

6.6. an identification of any cited references that may be disqualified under 35 U.S.C. 103(c).

## REVIEW OF FACTS

The conditions I:1-4, II: 1-5, 5.3, 6, 6.1- 6.6 above are considered to have been met. However, the petition fails to comply with conditions II : 5.1 and 5.2 above. Therefore, the petition fails to

meet the required conditions to be accorded special status under the accelerated examination procedure.

**Discussion**

When referring to "the petition" hereinbelow, the received papers under consideration include the PTO/SB/28 form, the "pre-examination search document" including pages 1-16; the "accelerated examination support document" comprising pages 1-38, and an Information Disclosure Statement including form PTO/SB/08A.

Regarding the requirements of section II element 5.1 and 5.2 outlined above, it appears the search outlined in the petition omitted a critical search area by not searching in the following class/subclasses:
623/16.11
623/17.11
623/17.16
623/18.11
623/22.11
623/22.15
623/22.17-22.18
623/22.21-22.22
623/22.26
623/22.3
623/23.11-23.12
623/23.39-23.43

Applicant is reminded that should any closer prior art be found an updated accelerated examination support document must be submitted.

DECISION

For the above-stated reasons, the petition is **dismissed**. The application will therefore be taken up by the examiner for action in its regular turn.

Petitioner is given a single opportunity to perfect the petition. Any request for reconsideration of this decision must be submitted within 1 (one) month or 30 (thirty) days, whichever is longer, (no extension of time under 37 CFR 1.136(a)) from the date of this decision in order to be considered timely. Any request for reconsideration must address all of the deficiencies indicated above.

Petitioner is reminded that, upon granting of the special status of the application on request for reconsideration, the application will be processed expeditiously. However, due to the dismissal of the instant petition, examination may not be completed within twelve months of the filing date of the application.

Any inquiry regarding this decision should be directed to Linda J. Sholl, TC 3700 Special Programs Examiner, at (571) 272-4391.

/Linda J. Sholl/
Linda J. Sholl
Special Programs Examiner
Technology Center 3700

UNITED STATES PATENT AND TRADEMARK OFFICE

Commissioner for Patents
United States Patent and Trademark Office
P.O. Box 1450
Alexandria, VA 22313-1450
www.uspto.gov

TREGO, HINES & LADENHEIM, PLLC
9300 HARRIS CORNERS PARKWAY
SUITE 210
CHARLOTTE NC 28269-3797

MAY 02 2011

In re Application of: Kellar et al.
Application No.: 12/983191
Filed: December 31, 2010
Title: PROSTHETIC KNEE JOINT

DECISION ON PETITION TO MAKE SPECIAL FOR NEW APPLICATION UNDER 37 C.F.R. § 1.102 & M.P.E.P. § 708.02

This is a decision on the renewed petition filed on April 28, 2011 to make the above-identified application special for accelerated examination procedure under 37 C.F.R. § 1.102(d).

The petition to make the application special is GRANTED.

The application is eligible for accelerated examination and the petition complies with the conditions for granting the application special status pursuant to the "Change to Practice for Petitions in Patent Applications to Make Special and for Accelerated Examination" published June 26, 2006, in the Federal Register. (71 Fed. Reg. 36323).

The prosecution of the instant application will be conducted expeditiously according to the following guidelines.

1. The application will be docketed to an examiner and taken up for action within two weeks of the date of this decision.

2. Restriction Practice:
   If the examiner determines that the claims are not directed to a single invention, a telephone request to elect one single invention will be made pursuant to MPEP 812.01. As a prerequisite to the grant of this petition, the applicant has agreed to make an oral election, by telephone, without traverse. If the applicant refuses to make an election without traverse, or the examiner cannot reach the applicant after a reasonable effort, the examiner will treat the first claimed invention (invention defined by claim 1) as having being constructively elected without traverse for examination.

3. Office action:
   If it is determined that, after appropriate consultation, there is a potential rejection or any other issue to be addressed, the examiner will telephone the applicant and arrange an interview to discuss and resolve the issue. An Office action, other than a Notice of Allowance and Fee(s) Due (Notice of Allowance), will not be issued unless either: 1) an interview was conducted but did not result in agreed to action that places the application in condition for allowance, or, 2) a determination is made that an interview would be unlikely to result in the application being placed in condition for allowance, and 3) an internal conference has been held to review any rejection of any claim.

4. Time for Reply:
   An Office action other than a Notice of Allowance or a final Office action will set a shortened statutory period of one month or thirty days, whichever is longer, for reply with no extension of time available under 37 CFR 1.136(a). Failure to timely file a reply within this non-extendible period for reply will result in the abandonment of the application.

5. Reply by Applicant:
   A timely reply to an Office action other than the Notice of Allowance must be submitted electronically via EFS or EFS-web and limited to addressing the rejections, objections and requirement made. Any amendment that attempts to: 1) add claims which would result in more than three pending independent claims or more than twenty pending total claims; 2) present claims not encompassed by the pre-examination search or an updated accelerated examination support document; or 3) present claims that are directed a non-elected invention or an invention other than that previously claimed and examined in the application, will be treated as not fully responsive and will not be entered.

   For any amendment to the claims (including any new claim) that is not encompassed by the accelerated examination support document, applicant must provide an updated accelerated examination support document that encompasses the amended or new claims at the time of filing of the amendment.

   To proceed expeditiously with the examination, it is recommended that a reply with amendments made to any claim or with any new claim being added be accompanied by an updated accelerated examination support document or a statement explaining how the amended or new claim is supported by the original accelerated examination support document.

6. Information Disclosure Statement (IDS):
   Any IDS filed during prosecution must be submitted electronically via EFS or EFS-web, accompanied by an updated accelerated examination support document, and be in compliance with 37 CFR 1.97 and 1.98.

7. Post-Allowance Processing:
   To expedite processing of the allowed application into a patent, the applicant must: 1) pay the required fees within one month of the date of the Notice of Allowance, and 2) not file any post allowance papers not required by the Office. In no event may the issue fee be paid and accepted later than three months from the date of the Notice of Allowance.

8. After-Final and Appeal Procedures:
   To expedite prosecution, after receiving the final Office action, applicant must: 1) promptly file a notice of appeal, an appeal brief and appeal fees; and 2) not request a pre-appeal brief conference.

   Any amendment, affidavit or other evidence filed after final Office action must comply with applicable rules and the requirements outlined in numbered paragraphs 5 and 6 above.

   On appeal, the application will proceed according to normal appeal procedures. After appeal, the application will again be treated special.

9. Proceedings Outside the Normal Examination Process:
   If the application becomes involved in a proceeding that is outside the normal examination process (e.g., a secrecy order, national security review, interference proceeding, petitions under 37 CFR 1.181, 182 or 183), the application will be treated special before and after such proceeding.

10. Final Disposition:
    The twelve month goal of this accelerated examination procedure ends with a final disposition. The mailing of a final Office action, a Notice of Allowance, the filing of a Notice of Appeal, or the filing of a Request for Continued Examination (RCE) is the final disposition.

If, during prosecution, a paper is not filed electronically using EFS-web, a reply is filed but is not fully responsive, the application is involved in an appeal, or a proceeding outside normal examination process, the application will still be examined expeditiously, however, the final disposition may occur more than twelve months from the filing of the application.

Any inquiry regarding this decision should be directed to Linda Sholl at (571) 272-4391

/Linda Sholl/
Linda Sholl
Special Programs Examiner
Technology Center 3700

PTO/SB/20PCT-EP (05-10)
Approved for use through 01/31/2012. OMB 0651-0058
U.S. Patent and Trademark Office; U. S. DEPARTMENT OF COMMERCE
Under the Paperwork Reduction Act of 1995, no persons are required to respond to a collection of information unless it displays a valid OMB control number.

# REQUEST FOR PARTICIPATION IN THE PATENT COOPERATION TREATY - PATENT PROSECUTION HIGHWAY (PCT-PPH) PILOT PROGRAM BETWEEN THE EUROPEAN PATENT OFFICE (EPO) AND THE USPTO

| | | | |
|---|---|---|---|
| Application No: | 12/983,304 | Filing date: | January 1, 2011 |
| First Named Inventor: | Homsi | | |
| Title of the Invention: | Method and Apparatus for Pile Driving | | |

**THIS REQUEST FOR PARTICIPATION IN THE PCT-PPH PILOT PROGRAM ALONG WITH THE REQUIRED DOCUMENTS MUST BE SUBMITTED VIA EFS-WEB. INFORMATION REGARDING EFS-WEB IS AVAILABLE AT HTTP://WWW.USPTO.GOV/EBC/EFS_HELP.HTML**

**APPLICANT HEREBY REQUESTS PARTICIPATION IN THE PCT-PPH PROGRAM AND PETITIONS TO MAKE THE ABOVE-IDENTIFIED APPLICATION SPECIAL UNDER THE PCT-PPH PROGRAM.**

The above-identified application is (1) a national stage entry of the corresponding PCT application, or (2) a national stage entry of another PCT application which claims priority to the corresponding PCT application, or (3) a national application that claims domestic/ foreign priority to the corresponding PCT application, or (4) a national application which forms the basis for the priority claim in the corresponding PCT application, or (5) a continuing application of a U.S. application that satisfies one of (1) to (4) above, or (6) a U.S. application that claims domestic benefit to a U.S. provisional application which forms the basis for the priority claim in the corresponding PCT application.

**The corresponding PCT application number(s) is/are:** PCT/US2011/020002

**The international filing date of the corresponding PCT application(s) is/are:** 1 January 2011

**I. List of Required Documents:**

a. **A copy of the latest international work product (WO/ISA, WO/IPEA, or IPER) in the above–identified corresponding PCT application(s)**

☐ Is attached

☒ Is not attached because the document is already in the U.S. application.

b. **A copy of all claims which were indicated as having novelty, inventive step and industrial applicability in the above-identified corresponding PCT application(s).**

☐ Is attached.

☒ Is not attached because the document is already in the U.S. application.

c. **English translations of the documents in a. and b. above are attached (if the documents are not in the English language). A statement that the English translation is accurate is attached for the document in b. above.**



This collection of information is required by 35 U.S.C. 119, 37 CFR 1.55, and 37 CFR 1.102(d). The information is required to obtain or retain a benefit by the public, which is to file (and by the USPTO to process) an application. Confidentiality is governed by 35 U.S.C. 122 and 37 CFR 1.11 and 1.14. This collection is estimated to take 2 hours to complete, including gathering, preparing, and submitting the completed application form to the USPTO. Time will vary depending upon the individual case. Any comments on the amount of time you require to complete this form and/or suggestions for reducing this burden should be sent to the Chief Information Officer, U.S. Patent and Trademark Office, U.S. Department of Commerce, P.O. Box 1450, Alexandria, VA 22313-1450. DO NOT SEND FEES OR COMPLETED FORMS TO THIS ADDRESS.

Approved for use through 01/31/2012. OMB 0651-0058
U.S.Patent and Trademark Office; U.S. DEPARTMENT OF COMMERCE

Under the Paperwork Reduction Act of 1995, no persons are required to respond to a collection of information unless it displays a valid OMB control number.

# REQUEST FOR PARTICIPATION IN THE PCT-PPH PILOT PROGRAM BETWEEN THE EPO AND THE USPTO

(continued)

| | |
|---|---|
| Application No.: | 12/983,304 |
| First Named Inventor: | Homsi |

d. **(1) An information disclosure statement listing the documents cited in the international work products (ISR, WO/ISA, WO/IPEA, IPER) of the corresponding PCT application.**

☐ Is attached

☒ Has already been filed in the above-identified U.S. application on 26 May 2011

**(2) Copies of all documents (except) for U.S. patents or U.S. patent application publications)**

☐ Are attached.

☒ Have already been filed in the above-identified U.S. application on 26 May 2011

**II. Claims Correspondence Table:**

| Claims in US Application | Patentable Claims in the corresponding PCT Application | Explanation regarding the correspondence |
|---|---|---|
| 1-22 | 1-22 | The claims in the U.S. application are identical to the claims in the PCT application |
| | | |
| | | |
| | | |
| | | |
| | | |
| | | |
| | | |
| | | |
| | | |
| | | |
| | | |
| | | |
| | | |
| | | |
| | | |
| | | |
| | | |
| | | |

**III. All the claims in the US application sufficiently correspond to the patentable claims in the corresponding PCT application.**

| | |
|---|---|
| Signature /Christopher J. Kulish/ | Date September 7, 2011 |
| Name (Print/Typed) Christopher J. Kulish | Registration Number 33,056 |

# Privacy Act Statement

The **Privacy Act of 1974 (P.L. 93-579)** requires that you be given certain information in connection with your submission of the attached form related to a patent application or patent. Accordingly, pursuant to the requirements of the Act, please be advised that: (1) the general authority for the collection of this information is 35 U.S.C. 2(b)(2); (2) furnishing of the information solicited is voluntary; and (3) the principal purpose for which the information is used by the U.S. Patent and Trademark Office is to process and/or examine your submission related to a patent application or patent. If you do not furnish the requested information, the U.S. Patent and Trademark Office may not be able to process and/or examine your submission, which may result in termination of proceedings or abandonment of the application or expiration of the patent.

The information provided by you in this form will be subject to the following routine uses:

1. The information on this form will be treated confidentially to the extent allowed under the Freedom of Information Act (5 U.S.C. 552) and the Privacy Act (5 U.S.C 552a). Records from this system of records may be disclosed to the Department of Justice to determine whether disclosure of these records is required by the Freedom of Information Act.
2. A record from this system of records may be disclosed, as a routine use, in the course of presenting evidence to a court, magistrate, or administrative tribunal, including disclosures to opposing counsel in the course of settlement negotiations.
3. A record in this system of records may be disclosed, as a routine use, to a Member of Congress submitting a request involving an individual, to whom the record pertains, when the individual has requested assistance from the Member with respect to the subject matter of the record.
4. A record in this system of records may be disclosed, as a routine use, to a contractor of the Agency having need for the information in order to perform a contract. Recipients of information shall be required to comply with the requirements of the Privacy Act of 1974, as amended, pursuant to 5 U.S.C. 552a(m).
5. A record related to an International Application filed under the Patent Cooperation Treaty in this system of records may be disclosed, as a routine use, to the International Bureau of the World Intellectual Property Organization, pursuant to the Patent Cooperation Treaty.
6. A record in this system of records may be disclosed, as a routine use, to another federal agency for purposes of National Security review (35 U.S.C. 181) and for review pursuant to the Atomic Energy Act (42 U.S.C. 218(c)).
7. A record from this system of records may be disclosed, as a routine use, to the Administrator, General Services, or his/her designee, during an inspection of records conducted by GSA as part of that agency's responsibility to recommend improvements in records management practices and programs, under authority of 44 U.S.C. 2904 and 2906. Such disclosure shall be made in accordance with the GSA regulations governing inspection of records for this purpose, and any other relevant ( *i.e.*, GSA or Commerce) directive. Such disclosure shall not be used to make determinations about individuals.
8. A record from this system of records may be disclosed, as a routine use, to the public after either publication of the application pursuant to 35 U.S.C. 122(b) or issuance of a patent pursuant to 35 U.S.C. 151. Further, a record may be disclosed, subject to the limitations of 37 CFR 1.14, as a routine use, to the public if the record was filed in an application which became abandoned or in which the proceedings were terminated and which application is referenced by either a published application, an application open to public inspection or an issued patent.
9. A record from this system of records may be disclosed, as a routine use, to a Federal, State, or local law enforcement agency, if the USPTO becomes aware of a violation or potential violation of law or regulation.

UNITED STATES PATENT AND TRADEMARK OFFICE

Commissioner for Patents
United States Patent and Trademark Office
P.O. Box 1450
Alexandria, VA 22313-1450
www.uspto.gov

**CHRISTOPHER J. KULISH, P.C.**
**1531 NORWOOD AVENUE**
**BOULDER CO 80304**

**MAILED**
**MAR 12 2012**
**OFFICE OF PETITIONS**

In re Application of
Elie H. HOMSI
Application No.: 12/983,304
Filed: January 01, 2011
Attorney Docket No.: 53150.0013
For: METHOD AND APPARATUS FOR PILE DRIVING

: DECISION ON REQUEST TO
: PARTICIPATE IN THE PATENT
: PROSECUTION HIGHWAY
: PROGRAM AND PETITION
: TO MAKE SPECIAL UNDER
: 37 CFR 1.102(a)

This is a decision on the request to participate in the PCT Patent Prosecution Highway (PCT-PPH) pilot program and the petition under 37 CFR 1.102(a), filed on September 07, 2011, to make the above-identified application special.

The request and petition are **DISMISSED**.

**Discussion**

A grantable request to participate in the PCT-PPH pilot program and petition to make special require:

(1) The U.S. application must have an eligible relationship to one or more PCT applications where the ISA or IPEA are the JPO, EPO, KIPO, IPAU, Russia, Spain, Finland, Austria, or USPTO;

(2) At least one claim in the PCT application has novelty, inventive step, and industrial applicability and must be free of any observations in Box VIII in the latest work product in the international stage or applicant must identify and explain why the claim(s) is/are not subject to the observation in Box VIII;

(3) Applicant must submit a copy of the claim(s) from the PCT application(s) that have novelty, inventive step, and industrial applicability along with an English translation thereof and a statement that the English translation is accurate, if the claims are not in the English language;

(4) All the claims in the U.S. application must sufficiently correspond or be amended to sufficiently correspond to the claim(s) that have novelty, inventive step, and industrial applicability in the PCT application(s);

(5) Examination of the U.S. application has not begun;

(6) Applicant must submit a copy of the latest international work product from the PCT application indicating that the claim(s) have novelty, inventive step, and industrial applicability along with an English translation thereof.

(7) Applicant must submit an IDS listing the documents cited by the PCT examiner in the international work product along with copies of documents except U.S. patents or U.S. patent application publications.

(8) Applicant is required to submit a claims correspondence table in English which indicates how all the claims in the U.S. application correspond to the claims indicated as having novelty, inventive step and industrial applicability in the latest international work product.

Requirements (2-8) above are considered to have been met. However, the request to participate in the PPH pilot program and petition fail to meet requirements (1).

**Regarding the requirement of condition (1), the U.S. application must have an eligible relationship to one or more PCT applications. A claim for priority to the EPO application has not been made in the U.S. application.**

Applicant is given **ONE** opportunity within a time period of **ONE MONTH or THIRTY DAYS**, whichever is longer, from the mailing date of this decision to correct the deficiencies. **NO EXTENSION OF TIME UNDER 37 CFR 1.136 IS PERMITTED.** If the deficiencies are not corrected with the time period given, the application will await action in its regular turn.

Response must be filed via the Electronic Filing System (EFS) using the document description: Petition to make special under PCT – Patent Pros Hwy. Any preliminary amendments and IDS submitted with the PPH documents must be separately indexed as a preliminary amendment and IDS, respectively.

Telephone inquiries concerning this decision should be directed to Michelle R. Eason at 571-272-4231.

All other inquiries concerning the examination or status of the application is accessible in the PAIR system at http://www.uspto.gov/ebc/index.html.

Thurman K. Page
Petitions Examiner
Office of Petitions

PATENT APPLICATION

IN THE UNITED STATES PATENT AND TRADEMARK OFFICE

| | | |
|---|---|---|
| In re the Application of: | ) | Art Unit: 3672 |
| | ) | |
| HOMSI | ) | Examiner: Lagman, Frederick Lyndon |
| | ) | |
| Application No.: 12/983,304 | ) | Confirmation No.: 1019 |
| | ) | |
| Filed: January 1, 2011 | ) | |
| | ) | |
| Atty. Docket No.: 53150.0013 | ) | |
| | ) | |
| Title: "METHOD AND APPARATUS FOR PILE DRIVING" | ) | |

Commissioner for Patents
P.O. Box 1450
Alexandria, VA 22313-1450

**REQUEST FOR RECONSIDERATION OF DECISION TO DISMISS REQUEST TO PARTICIPATE IN THE PATENT PROSECUTION HIGHWAY AND PETITION TO MAKE SPECIAL UNDER 37 CFR 1.102(a)**
**(37 CFR §1.102(a))**

Dear Sir:

On 7 September 2011, a Request for Participation in the Patent Cooperation Treaty – Patent Prosecution Highway (PCT-PPH) Pilot Program between the European Patent Office (EPO) and the USPTO relating to the above-identified patent application ("the '304 application") was electronically filed with the Office. In a Decision on Request to Participate in the Patent Prosecution Highway Program and Petition to Make Special Under 37 CFR 1.102(a) bearing a mailing date of March 12, 2012, the Office dismissed the request and the related petition allegedly because the '304 application does not have an eligible relationship to one or more PCT applications. More specifically, the Office has indicated that the '304 application does not have a claim for priority to an EPO application.

The '304 application does have an eligible relationship. In this regard, the Notice entitled "Patent Prosecution Highway Pilot Program between the United States Patent and Trademark Office and the European Patent Office based on Patent Cooperation Treaty Work Products" at 1351 OG 209 identifies several different eligible relationships between a U.S. application and a PCT application that can render the U.S. application eligible for PPH processing, including the relationship identified as (E2). A copy of the Notice with the (E2) relationship highlighted is attached.

The above-identified U.S. application has the (E2) relationship identified in the Notice.

(a) The U.S. provisional patent application 61/291,860 ("the '860 application") corresponds to US1, the '304 application corresponds to US2, and PCT application number PCT/US11/020002 ("the '002 application) corresponds to PCT RO/US in the diagram of the (E2) relationship.

(b) The '304 application claims domestic priority from the '860 application. The domestic priority claim was set forth in the Application Data Sheet filed in connection with the '304 application and acknowledged by the Office in the Filing Receipt issued for the '304 application. Copies of the Application Data Sheet and Filing Receipt are in the PAIR database and available to the Office. The note associated with the (E2) relationship indicates that US2 can be a non-provisional application claiming benefit under 35 U.S.C. 119(e) to a provisional application (US1), which is the case with the '304 and '860 applications.

(c) The '002 application, which was filed with the USPTO acting as a Receiving Office under the PCT, also claims priority from the '860 application. The priority claim was set forth in the PCT Request filed in connection with the '002 application and acknowledged by the International Bureau of WIPO in a Form PCT/IB/304. A copy of the PCT Request is in the PAIR database and available to the Office. A copy of the Form PCT/IB/304 is attached.

(d) The PCT Request for the '002 application indicates that the European Patent Office (EPO) was chosen as the International Search Authority. The EPO, acting as the ISA, examined the '002 application and issued an International Search and Written Opinion on the application. The Opinion satisfied the second requirement for PPH processing. Copies of the International Search and Written Opinion were submitted to the Office in an Information Disclosure Statement filed on May 26, 2011 in connection with the '304 application. These documents are in the

PAIR database and available to the Office. The copies of the Search and Opinion documents clearly indicate that the documents were produced by the European Patent Office.

Based on the foregoing, it is submitted that the '304 application does have an eligible relationship to a '002 application. Since the '304 application does have an eligible relationship and, as noted by the Office, all of the other requirements for PPH processing have been satisfied, the applicant respectfully requests reconsideration and allowance of the Request and petition.

Respectfully submitted,

By: /Christopher J. Kulish/

Christopher J. Kulish, Esq.
Registration No. 33,056
1531 Norwood Avenue
Boulder, Colorado 80304
(303) 440-6210

Date: March 24, 2012

Patent Prosecution Highway Pilot Program between the United States Patent and Trademark Office and the Japan Patent Office based on Patent Cooperation Treaty Work Products

# Patent Prosecution Highway Pilot Program between the United States Patent and Trademark Office and the Japan Patent Office based on Patent Cooperation Treaty Work Products

## I. Background

The United States Patent and Trademark Office (USPTO) and the Japan Patent Office (JPO) began full implementation of a Patent Prosecution Highway (PPH) program on January 4, 2008. See "Notice Regarding Full Implementation of Patent Prosecution Highway Program between the United States Patent and Trademark Office and the Japan Patent Office," published on March 4, 2008, at 1328 OG 44. Under the prior PPH program, an applicant receiving a determination from the JPO that at least one claim in a Japanese application is allowable/patentable may request that a corresponding application filed in the USPTO be accorded special status and be advanced out of turn for examination. The prior PPH program was limited to the utilization of search and examination results of national applications between cross filings under the Paris Convention.

At the November 2009 Trilateral Conference, as part of a Trilateral effort, the Trilateral Offices (USPTO, JPO and European Patent Office (EPO)) agreed to launch a new PPH pilot program based on Patent Cooperation Treaty (PCT) work products (PCT-PPH pilot program). The PCT-PPH pilot program will greatly expand the potential of the PPH program. This notice sets forth the requirements and details for the PCT-PPH pilot program between the USPTO and the JPO. For the requirements and details for the PCT-PPH pilot program between the USPTO and the EPO, see the corresponding notice entitled "Patent Prosecution Highway Pilot Program between the United States Patent and Trademark Office and the European Patent Office based on Patent Cooperation Treaty Work Products. "

By permitting the USPTO to draw upon positive PCT work products from the JPO, the PPH program will now be available to a larger number of applicants.

## II. PCT-PPH Pilot Program

The PCT-PPH pilot program was established to enable an applicant, who has received

(1) a Written Opinion from an International Searching Authority (WO/ISA) (ISA must be the JPO or the USPTO), or

(2) a Written Opinion from an International Preliminary Examining Authority (WO/IPEA) (IPEA must be the JPO or the USPTO), or

(3) an International Preliminary Examination Report (IPER) from an International Preliminary Examining Authority (IPEA must be the JPO or the USPTO),

that indicates at least one claim in the PCT application has novelty, inventive step and industrial

applicability, to file a request to participate in the PCT-PPH pilot program in a corresponding U.S. application and petition to make the U.S. application special under the PCT-PPH pilot program. Note that the procedures for a petition to make special under the accelerated examination program set forth in MPEP 708.02(a) do NOT apply to a petition to make special under the PCT-PPH pilot program. The procedures and requirements for filing a request in the USPTO for participation in the PCT-PPH pilot program are set forth below.

**A. Trial Period for the PCT-PPH Pilot Program**

The PCT-PPH pilot program will commence on January 29, 2010, for a period of two years ending on January 28, 2012. The trial period may be extended if necessary until the USPTO and the JPO receive a sufficient number of PPH requests to adequately assess the feasibility of the PCT-PPH pilot program. The USPTO and the JPO may also terminate the PCT-PPH pilot program early if the volume of participation exceeds a manageable level, or for any other reasons. Notice will be published if the PCT-PPH pilot program will be terminated before the January 28, 2012 date.

**B. Requirements for Requesting Participation in the PCT-PPH Pilot Program in the USPTO**

In order to be eligible to participate in the PCT-PPH pilot program, the following conditions must be met:

(1) The relationship between the corresponding U.S. application for which participation in the PCT-PPH pilot program is requested and the PCT application satisfies one of the following requirements (note that RO/-- as used in the diagrams below refers to an international application filed under the PCT in any competent receiving office):

(a) The U.S. application is a national stage entry of the corresponding PCT application. See diagrams (A), (A') and (A") below.

**(A) The U.S. application is a national stage entry of the corresponding PCT application.**

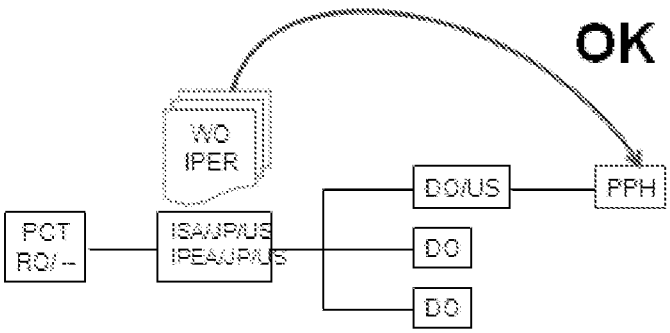

(A') The U.S. application is a national stage entry of the corresponding PCT application.

(The corresponding PCT application claims priority to a national application filed anywhere.)

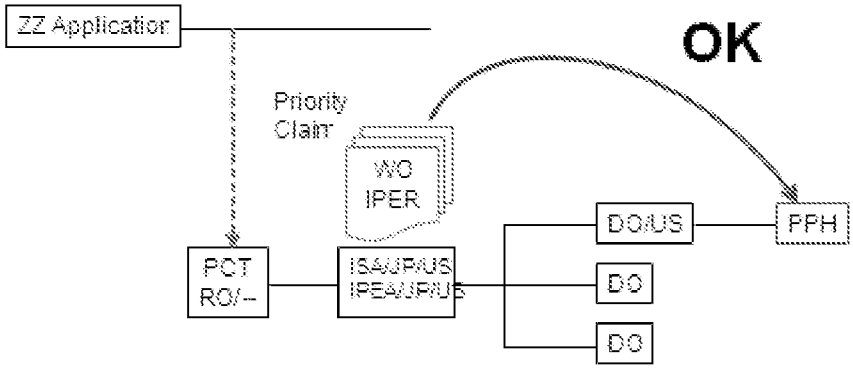


(A") The U.S. application is a national stage entry of the corresponding PCT application.

(The corresponding PCT application claims priority to another PCT application.)

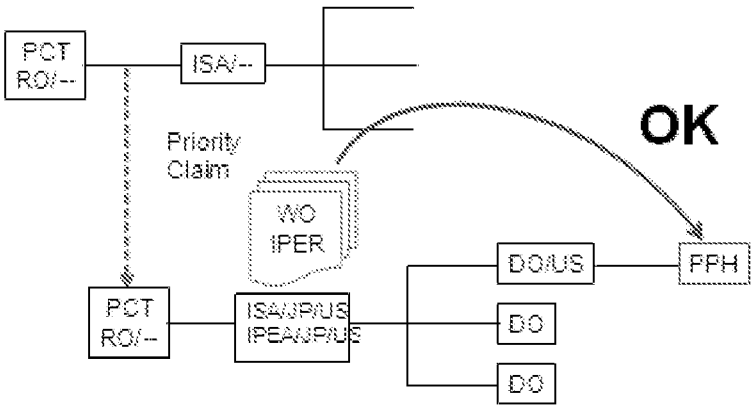


(b) The U.S. application is a national application which forms the basis for the priority claim in the corresponding PCT application. See diagram (B) below.

Provisional applications, plant applications, design applications, reissue applications and applications subject to a secrecy order (35 U.S.C. 181) are <u>excluded and not subject to participation in the PCT-PPH pilot program.</u>

(B) The U.S. application is a national application which forms the basis for the priority claim in the corresponding PCT application.

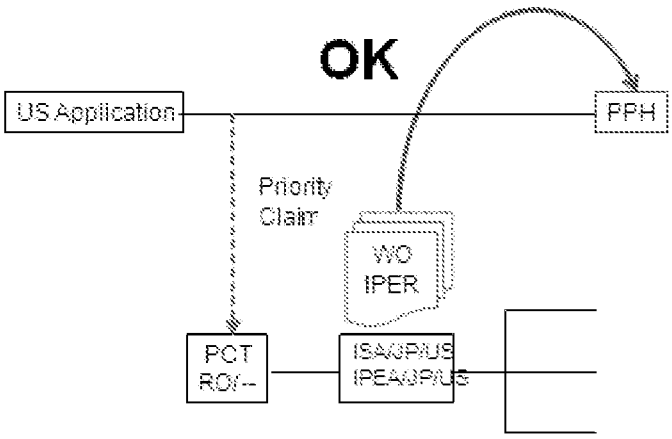


(c) The U.S. application is a national stage entry of another PCT application (which can be filed in any competent receiving office) which claims priority to the corresponding PCT application. See diagram (C) below.

(C) The U.S. application is a national stage entry of a PCT application which claims priority to the corresponding PCT application.

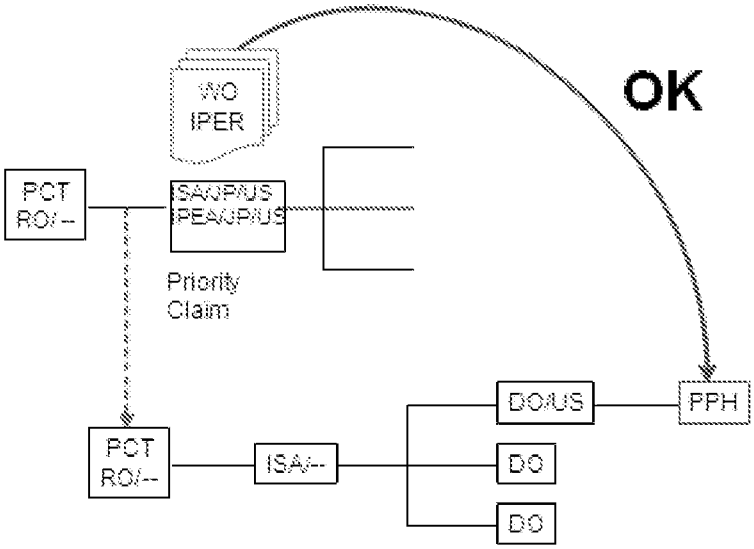


(d) The U.S. application is a national application claiming foreign/domestic priority to the corresponding PCT application. See diagram (D) below.

Design applications and applications subject to a secrecy order (35 U.S.C. 181) are <u>excluded and not subject to participation in the PCT-PPH pilot program.</u>

**(D) The U.S. application is a national application claiming foreign/domestic priority to the corresponding PCT application.**

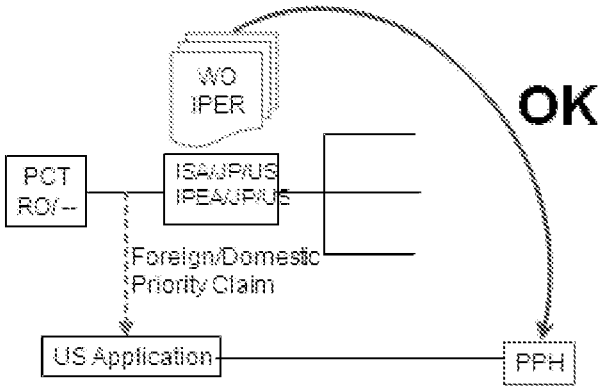


(e) The U.S. application is a continuing application (continuation, divisional, or continuation-in-part) of the U.S. application which satisfies one of the above (a) to (d) scenarios. See diagrams (E1) and (E2) below.

Plant applications, design applications and applications subject to a secrecy order (35 U.S.C. 181) are <u>excluded and not subject to participation in the PCT-PPH pilot program.</u>

**(E1) The U.S. application is a continuing application of an application which satisfies the requirement (a).**

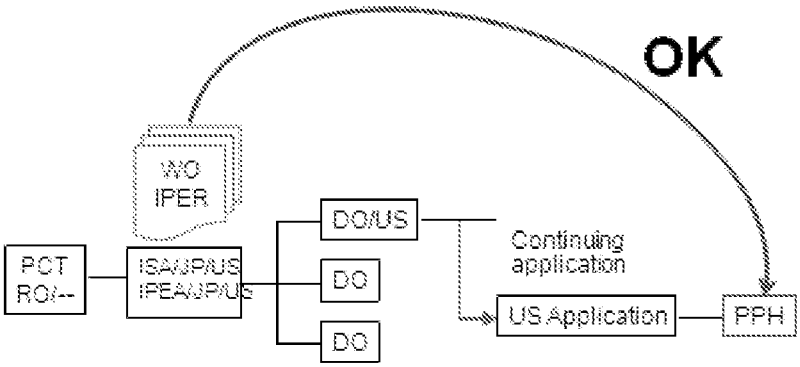

**(E2) The U.S. application (US2) is an application claiming Domestic priority to an application (US1) which satisfies the requirement (b).**

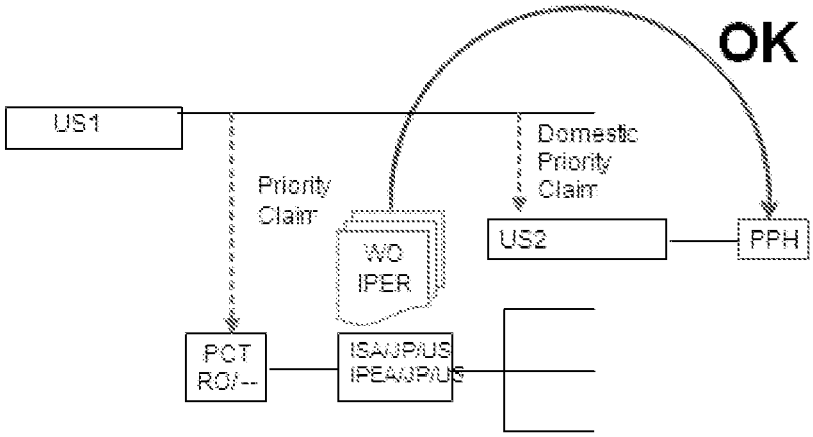


In diagram (E2), US2 application may be a non-provisional application claiming benefit under 35 U.S.C 119(e) to a provisional application (US1).

(2) The latest work product in the international phase of the PCT application corresponding to the U.S. application, namely the WO/ISA, or the WO/IPEA, or the IPER, indicates at least one claim in the PCT application has novelty, inventive step and industrial applicability. In case any observation is described in Box VIII of the WO/ISA, or WO/IPEA, or IPER which forms the basis for the PCT-PPH request, applicant must identify and explain why the claim(s) is/are not subject to any observation described in Box VIII irrespective of whether an amendment is submitted to correct the observation described in Box VIII. The U.S. application will not be eligible to participate in the PCT-PPH pilot program if applicant does not identify and explain why the claim(s) is/are not subject to the observation described in Box VIII.

Note that the ISA and the IPEA which produced the WO/ISA, WO/IPEA and the IPER are limited to the JPO or the USPTO. Where the EPO is the ISA and/or IPEA and applicant wishes to participate in the PCT-PPH pilot program, see the corresponding notice entitled "Patent Prosecution Highway Pilot Program between the United States Patent and Trademark Office and the European Patent Office based on Patent Cooperation Treaty Work Products."

Applicant may <u>not</u> file a request to participate in the PCT-PPH pilot program on the basis of an International Search Report (ISR) only.

(3) Claim Correspondence

(a) <u>All</u> the claims in each U.S. application for which a request for participation in the PCT-PPH pilot program is made must sufficiently correspond to or be amended to sufficiently correspond to one or more of those claims indicated as having novelty, inventive step and industrial applicability and free of any observation described in Box VIII in the latest work product of the corresponding PCT application.

(b) Claims are considered to "sufficiently correspond" where, accounting for differences due to translations and claim format requirements, the claims in the U.S. application are of the same or

similar scope as the claims indicated as having novelty, inventive step and industrial applicability and free of any observation described in Box VIII in the latest work product of the corresponding PCT application, or the claims in the U.S. application are narrower in scope than the claims indicated as having novelty, inventive step and industrial applicability and free of any observation described in Box VIII in the latest work product of the corresponding PCT application.

(c) In this regard, a claim that is narrower in scope occurs when a claim indicated as having novelty, inventive step and industrial applicability and free of any observation described in Box VIII in the latest work product of the corresponding PCT application is amended to be further limited by an additional feature that is supported in the written description of the U.S. application. The claim(s) with the narrower scope must be written in dependent form in the U.S. application for which participation in the PCT-PPH pilot program is requested.

(4) Substantive examination of the U.S. application for which participation in the PCT-PPH pilot program is requested has not begun.

(5) Applicant must file a request for participation in the PCT-PPH pilot program and a petition to make the U.S. application special under the PCT-PPH pilot program. A sample request/petition form (PTO/SB/20PCT-JP) will be available from the USPTO Web site at http://www.uspto.gov on January 29, 2010. Applicants are encouraged to use the USPTO request/petition form. A petition fee under 37 CFR 1.17(h) for the petition to make special under 37 CFR 1.102(d) is required and must be submitted.

(6) Unless already filed in the U.S. application for which participation in the PCT-PPH pilot program is requested, applicant must submit a copy of the latest international work product, WO/ISA, or WO/IPEA or IPER, which indicated that the claim(s) has/have novelty, inventive step and industrial applicability along with an English translation thereof if the copy of the latest international work product is not in the English language. A statement that the English translation is accurate is not required. Where the required documents have been previously filed in the U.S. application, applicant may simply refer to these documents and indicate in the request for participation in the PCT-PPH pilot program when these documents were previously filed in the U.S. application. Where the U.S. application and the corresponding PCT application satisfy the relationship noted in B.(1)(a) above, applicant need not submit a copy of the latest international work product along with an English translation thereof since a copy of these documents is already contained in the file wrapper of the U.S. application.

(7) Unless already filed in the U.S. application for which participation in the PCT-PPH pilot program is requested, applicant must submit a copy of the claims from the corresponding PCT application which were indicated as having novelty, inventive step and industrial applicability in the latest work product of the PCT application along with an English translation thereof and a statement that the English translation is accurate if the claims are not in the English language. Where the required documents have been previously filed in the U.S. application, applicant may simply refer to these documents and indicate in the request for participation in the PCT-PPH pilot program when these documents were previously filed in the U.S. application. If the claims in the U.S. application for which participation in the PCT-PPH pilot program is requested are identical to the claims from the corresponding PCT application, and are in the English language, applicant may just indicate such in the PCT-PPH request and it will not be necessary for applicant to submit a copy of the claims from the corresponding PCT application.

(8) Applicant is required to submit a claims correspondence table in English. The claims correspondence table must indicate how all the claims in the U.S. application sufficiently correspond to the claims indicated as having novelty, inventive step and industrial applicability in the latest international work product.

(9) Applicant must submit an information disclosure statement (IDS) listing the documents cited in the international work products (ISR, WO/ISA, WO/IPEA, IPER) of the PCT application corresponding to the U.S. application for which participation in the PCT-PPH pilot program is requested (unless such an IDS has already been filed in the U.S. application, applicant may simply refer to the previously filed IDS and indicate in the request for participation in the PCT-PPH pilot program when the IDS was previously filed in the U.S. application). Applicant must submit copies of all the documents cited in the international work products of the PCT application corresponding to the U.S. application (unless the copies have already been filed in the U.S. application, applicant may simply refer to the previously filed copies of the documents and indicate in the request for participation in the PCT-PPH pilot program when the copies were previously filed in the U.S. application) except U.S. patents or U.S. patent application publications.

(10) The request for participation in the PCT-PPH pilot program and all the supporting documents must be submitted to the USPTO via EFS-Web and indexed with the following document description: "Petition to make special under PCT-Patent Pros Hwy." Information regarding EFS-Web is available at http://www.uspto.gov/ebc/efs_help.html Any preliminary amendments and IDS submitted with the PCT-PPH documents must be separately indexed as a preliminary amendment and IDS, respectively.

Where the request for participation in the PCT-PPH pilot program and special status are granted, applicant will be notified and the U.S. application will be advanced out of turn for examination. In those instances where the request for participation in the PCT-PPH pilot program does not meet all the requirements set forth above, applicant will be notified and the defects in the request will be identified. Applicant will be given one opportunity to perfect the request in a renewed request for participation (which must be submitted via EFS-Web and indexed accordingly as noted above). Note that action on the application by the examiner will NOT be suspended (37 CFR 1.103) awaiting a reply by the applicant to perfect the request in a renewed request for participation. That is, if the application is picked up for examination by the examiner after applicant has been notified of the defects in the request, any renewed request will be dismissed. If the renewed request is perfected and examination has not begun, the request and special status will be granted, applicant will be notified and the U.S. application will be advanced out of turn for examination. If not perfected, applicant will be notified and the application will await action in its regular turn.

Request for participation in the PPH pilot program and special status granted in a parent application will not carry over to a continuing application. Applicant must fulfill all the conditions set forth above in order for special status to be granted in the continuing application.

**C. Special Examining Procedures**

Once the request for participation in the PCT-PPH pilot program and special status have been granted to the U.S. application, the U.S. application will be taken up for examination by the U.S. examiner before all other categories of applications except those clearly in condition for allowance, those with set time limits, such as examiner's answers, and those that have been granted special status for "accelerated examination."

Any claims amended or added after the grant of the request for participation in the PCT-PPH pilot program must "sufficiently correspond" to the claims indicated as having novelty, inventive step and industrial applicability in the latest work product of the corresponding PCT application. See the definition of "sufficient correspondence" in II.B.(3) above. Applicant is required to submit a claims correspondence table along with the amendment (see II.B.(8) above). If the amended or newly added claims do not sufficiently correspond to the claims indicated as having novelty, inventive step and industrial applicability in the latest work product of the corresponding PCT application, the amendment

will not be entered and will be treated as a non-responsive reply.

The PCT-PPH program does not absolve applicants of all their duties under 37 CFR 1.56 and 37 CFR 11.18, By complying with requirements II.B.(6) and (9) identified above, applicants would be considered to have complied with their duties to bring to the attention of the USPTO any material prior art cited in the corresponding PCT application (see MPEP § 2001.06(a)). Applicants still have a duty of candor and good faith, including providing to the USPTO other information known to them to be material to patentability.

Any inquiries concerning this notice may be directed to Magdalen Greenlief, Office of the Associate Commissioner for Patent Examination Policy, at 571-272-8800 or at magdalen.greenlief@uspto.gov.

DAVID J. KAPPOS

Under Secretary of Commerce for Intellectual Property and

Director of the United States Patent and Trademark Office

# ADVANCE E-MAIL

From the INTERNATIONAL BUREAU

# PCT

NOTIFICATION CONCERNING SUBMISSION, OBTENTION OR TRANSMITTAL OF PRIORITY DOCUMENT

(PCT Administrative Instructions, Section 411)

To:

KULISH, Christopher J.
1531 Norwood Avenue
Boulder, Colorado 80304
ETATS-UNIS D'AMERIQUE

| | |
|---|---|
| Date of mailing *(day/month/year)*<br>18 February 2011 (18.02.2011) | |
| Applicant's or agent's file reference<br>53150-0013 | IMPORTANT NOTIFICATION |
| International application No.<br>PCT/US2011/020002 | International filing date *(day/month/year)*<br>01 January 2011 (01.01.2011) |
| International publication date *(day/month/year)*<br>**Not yet published** | Priority date *(day/month/year)*<br>01 January 2010 (01.01.2010) |
| Applicant<br>FLATIRON CONSTRUCTORS, INC. et al | |

The applicant is hereby notified of the date of receipt (or of obtaining by the International Bureau) of the priority document(s) relating to all earlier application(s) whose priority is claimed. Unless otherwise indicated by the letters "NR", in the right-hand column or by an asterisk appearing next to the date of receipt, **the priority document concerned was submitted or transmitted to or obtained by the International Bureau in compliance with Rule 17.1(a), (b) or (b-*bis*)**. This Form replaces any previously issued notification concerning submission, transmittal or obtaining of priority documents.

| Priority date | Priority application No. | Country or regional Office or PCT receiving Office | Date of receipt of priority document |
|---|---|---|---|
| 01 January 2010 (01.01.2010) | 61/291,860 | US | 07 February 2011 (07.02.2011) |

The letters "NR" denote a priority document which, on the date of mailing of this Form, had not yet been received or obtained by the International Bureau in compliance with Rule 17.1(a), (b) or (b-*bis*). Where the applicant has failed to either submit, request to prepare and transmit or obtain and transmit, or to request the International Bureau to obtain the priority document within the applicable time limit under that Rule, the attention of the applicant is directed to Rule 17.1(c) which provides that no designated Office may disregard the priority claim concerned before giving the applicant an opportunity, upon entry into the national phase, to furnish the priority document within a time limit which is reasonable under the circumstances.

An asterisk "*" next to a date of receipt, denotes a priority document submitted or transmitted to or obtained by the International Bureau but not in compliance with Rule 17.1(a), (b) or (b-*bis*) (the priority document was received after the time limit prescribed in Rule 17.1(a), the request to prepare and transmit the priority document was submitted to the receiving Office after the applicable time limit under Rule 17.1(b) or the request to the receiving Office or the International Bureau to obtain the priority document was made after the applicable time limit under Rule 17.1(b-*bis*)). Even though the priority document was not furnished in compliance with Rule 17.1(a), (b) or (b-*bis*), the International Bureau will nevertheless transmit a copy of the document to the designated Offices, for their consideration. In case such a copy is not accepted by the designated Office as the priority document, Rule 17.1(c) provides that no designated Office may disregard the priority claim concerned before giving the applicant an opportunity, upon entry into the national phase, to furnish the priority document within a time limit which is reasonable under the circumstances.

| | |
|---|---|
| The International Bureau of WIPO<br>34, chemin des Colombettes<br>1211 Geneva 20, Switzerland<br><br>Facsimile No. +41 22 338 87 40 | Authorized officer<br>Dorothée Mülhausen<br>e-mail pt01.pct@wipo.int<br>Telephone No. +41 22 338 74 01 |

UNITED STATES PATENT AND TRADEMARK OFFICE

UNITED STATES DEPARTMENT OF COMMERCE
United States Patent and Trademark Office
Address: COMMISSIONER FOR PATENTS
P.O. Box 1450
Alexandria, Virginia 22313-1450
www.uspto.gov

| APPLICATION NO. | FILING DATE | FIRST NAMED INVENTOR | ATTORNEY DOCKET NO. | CONFIRMATION NO. |
|---|---|---|---|---|
| 12/983,363 | 01/03/2011 | Bryant Christopher Lee | | 1223 |

99588 7590 01/13/2011
Advanced Research LLC
7500 Woodmont Ave. #1122
Bethesda, MD 20814

| EXAMINER |
|---|
| TRUJILLO, JAMES K |

| ART UNIT | PAPER NUMBER |
|---|---|
| 2159 | |

| MAIL DATE | DELIVERY MODE |
|---|---|
| 01/13/2011 | PAPER |

**Please find below and/or attached an Office communication concerning this application or proceeding.**

The time period for reply, if any, is set in the attached communication.

UNITED STATES PATENT AND TRADEMARK OFFICE

Commissioner for Patents
United States Patent and Trademark Office
P.O. Box 1450
Alexandria, VA 22313-1450
www.uspto.gov

Advanced Research LLC
7500 Woodmont Ave. # 1122
Bethesda, MD 20814

| | |
|---|---|
| In re Application of:<br>Bryant C. LEE<br>Serial No.: 12/983,363<br>Filed: January 03, 2011<br>Title: METHOD FOR HUMAN EDITING OF INFORMATION IN SEARCH RESULTS | DECISION ON PETITION TO MAKE SPECIAL FOR NEW APPLICATION UNDER 37 C.F.R. § 1.102 & M.P.E.P. § 708.02 |

This is a decision on the petition filed on January 03, 2011 to make the above-identified application special for accelerated examination procedure under 37 C.F.R. § 1.102(d).

The petition to make the application special is **GRANTED**.

The application is eligible for accelerated examination and the petition complies with the conditions for granting the application special status pursuant to the "Change to Practice for Petitions in Patent Applications to Make Special and for Accelerated Examination" published June 26, 2006, in the Federal Register. (71 Fed. Reg. 36323).

The prosecution of the instant application will be conducted expeditiously according to the following guidelines.

1. The application will be docketed to an examiner and taken up for action within two weeks of the date of this decision.

2. Restriction Practice:
   If the examiner determines that the claims are not directed to a single invention, a telephone request to elect one single invention will be made pursuant to MPEP 812.01. As a prerequisite to the grant of this petition, the applicant has agreed to make an oral election, by telephone, without traverse. If the applicant refuses to make an election without traverse, or the examiner cannot reach the applicant after a reasonable effort, the examiner will treat the first claimed invention (invention defined by claim 1) as having being constructively elected without traverse for examination.

3. Office action:

If it is determined that, after appropriate consultation, there is a potential rejection or any other issue to be addressed, the examiner will telephone the applicant and arrange an interview to discuss and resolve the issue. An Office action, other than a Notice of Allowance and Fee(s) Due (Notice of Allowance), will not be issued unless either: 1) an interview was conducted but did not result in agreed to action that places the application in condition for allowance, or, 2) a determination is made that an interview would be unlikely to result in the application being placed in condition for allowance, and 3) an internal conference has been held to review any rejection of any claim.

4. Time for Reply:
An Office action other than a Notice of Allowance or a final Office action will set a shortened statutory period of one month or thirty days, whichever is longer, for reply with no extension of time available under 37 CFR 1.136(a). Failure to timely file a reply within this non-extendible period for reply will result in the abandonment of the application.

5. Reply by Applicant:
A timely reply to an Office action other than the Notice of Allowance must be submitted electronically via EFS or EFS-web and limited to addressing the rejections, objections and requirement made. Any amendment that attempts to: 1) add claims which would result in more than three pending independent claims or more than twenty pending total claims; 2) present claims not encompassed by the pre-examination search or an updated accelerated examination support document; or 3) present claims that are directed a non-elected invention or an invention other than that previously claimed and examined in the application, will be treated as not fully responsive and will not be entered.

   For any amendment to the claims (including any new claim) that is not encompassed by the accelerated examination support document, applicant must provide an updated accelerated examination support document that encompasses the amended or new claims at the time of filing of the amendment.

   To proceed expeditiously with the examination, it is recommended that a reply with amendments made to any claim or with any new claim being added be accompanied by an updated accelerated examination support document or a statement explaining how the amended or new claim is supported by the original accelerated examination support document.

6. Information Disclosure Statement (IDS):
Any IDS filed during prosecution must be submitted electronically via EFS or EFS-web, accompanied by an updated accelerated examination support document, and be in compliance with 37 CFR 1.97 and 1.98.

7. Post-Allowance Processing:
   To expedite processing of the allowed application into a patent, the applicant must: 1) pay the required fees within one month of the date of the Notice of Allowance, and 2) not file any post allowance papers not required by the Office. In no event may the issue fee be paid and accepted later than three months from the date of the Notice of Allowance.

8. After-Final and Appeal Procedures:
   To expedite prosecution, after receiving the final Office action, applicant must: 1) promptly file a notice of appeal, an appeal brief and appeal fees; and 2) not request a pre-appeal brief conference.

   Any amendment, affidavit or other evidence filed after final Office action must comply with applicable rules and the requirements outlined in numbered paragraphs 5 and 6 above.

   On appeal, the application will proceed according to normal appeal procedures. After appeal, the application will again be treated special.

9. Proceedings Outside the Normal Examination Process:
   If the application becomes involved in a proceeding that is outside the normal examination process (e.g., a secrecy order, national security review, interference proceeding, petitions under 37 CFR 1.181, 182 or 183), the application will be treated special before and after such proceeding.

10. Final Disposition:
    The twelve month goal of this accelerated examination procedure ends with a final disposition. The mailing of a final Office action, a Notice of Allowance, the filing of a Notice of Appeal, or the filing of a Request for Continued Examination (RCE) is the final disposition.

If, during prosecution, a paper is not filed electronically using EFS-web, a reply is filed but is not fully responsive, the application is involved in an appeal, or a proceeding outside normal examination process, the application will still be examined expeditiously, however, the final disposition may occur more than twelve months from the filing of the application.

Any inquiry concerning this decision should be directed to the undersigned whose telephone number is (571) 272-3613.

*/Vincent N. Trans/*
Vincent N. Trans, SPRE/QAS
Technology Center 2100
Computer Architecture and Software

Doc Code: PET.GREEN
Document Description: Petition for Green Tech Pilot

PTO/SB/420 (03-11)

# PETITION TO MAKE SPECIAL UNDER THE GREEN TECHNOLOGY PILOT PROGRAM

| Attorney Docket Number: 242313-2 (GECZ 201073US01) | Application Number (if known): 12/983,425 | Filing date: 01-03-2011 |
|---|---|---|

First Named Inventor: Natarajan VENKATAKRISHNAN

Title: LOW COST AND FLEXIBLE ENERGY MANAGEMENT SYSTEM

**APPLICANT HEREBY REQUESTS TO PARTICIPATE IN THE GREEN TECHNOLOGY PILOT PROGRAM FOR THE ABOVE-IDENTIFIED APPLICATION. See Instruction Sheet on page 2.**

This petition must be timely filed electronically using the USPTO electronic filing system, EFS-Web.

1. By filing this petition:

   **Applicant is requesting early publication: Applicant hereby requests early publication under 37 CFR 1.219 and the publication fee set forth in 37 CFR 1.18(d) accompanies this request.**

2. By filing this petition: applicant is agreeing to make an election without traverse in a telephonic interview and elect an invention that meets the eligibility requirements for the Green Technology Pilot Program, if the Office determines that the claims are not obviously directed to a single invention. See Instruction Sheet.

3. This request is accompanied by statements of special status for the eligibility requirement.

4. The application contains no more than three (3) independent claims and twenty (20) total claims.

5. The application does not contain any multiple dependent claims.

6. Other attachments: Statement Concerning the Basis for the Special Status

| Signature /Allison W. Mages/ | Date October 4, 2011 |
|---|---|
| Name (Print/Typed) Allison W. Mages | Registration Number 57,275 |

*Note: Signatures of all the inventors or assignees of record of the entire interest or their representative(s) are required in accordance with 37 CFR 1.33 and 11.18. Please see 37 CFR 1.4(d) for the form of the signature. If necessary, submit multiple forms for more than one signature, see below*.*

☐ *Total of _____ forms are submitted.

*If you need assistance in completing the form, call 1-800-PTO-9199 and select option 2.*

**IN THE UNITED STATES PATENT AND TRADEMARK OFFICE**

| | |
|---|---|
| **First Named Inventor: Natarajan VENKATAKRISHNAN** | ) |
| **Confirmation No.: 1349** | ) |
| | ) |
| **Serial No.: 12/983,425** | ) |
| | ) |
| **Filing Date: 01-03-2011** | ) |
| | ) |
| **Atty Docket No.: 242313-2 (GECZ 201073US01)** | ) |

VIA EFS
Commissioner for Patents
P.O. Box 1450
Alexandria, VA 22313-1450

**Statement Concerning the Basis for the Special Status**

SIR:

This application relates to energy management, and more particularly to a premises energy management system for management of household consumer appliances, as well as other energy consuming devices and/or systems found in the home, at times called herein as accessories or network accessories. It finds particular application to a device which controls operation of the accessories (e.g., consumer appliances, as well as other energy consuming devices and/or systems), and acts as a controller/gateway between a Utility company network and the consumer appliances, as well as other energy consuming devices and/or systems. (See [0002])

Therefore, Applicant respectfully submits that Special Status is sought on the basis that the present invention materially contributes to the more efficient utilization and conservation of energy resources.

The undersigned representative may be contacted at the number below to facilitate the resolution of any matters. Please charge any fees that are incurred in connection with this Statement to deposit account no. 09-0470.

Respectfully submitted,

General Electric Company

By : /Allison W. Mages/
Allison W. Mages
Reg. No. 57,275

Dated: October 4, 2011

GE Global Patent Operation
2 Corporate Drive, Suite 648
Shelton, CT 06484
203-944-6730

UNITED STATES PATENT AND TRADEMARK OFFICE

UNITED STATES DEPARTMENT OF COMMERCE
United States Patent and Trademark Office
Address: COMMISSIONER FOR PATENTS
P.O. Box 1450
Alexandria, Virginia 22313-1450
www.uspto.gov

| APPLICATION NO. | FILING DATE | FIRST NAMED INVENTOR | ATTORNEY DOCKET NO. | CONFIRMATION NO. |
|---|---|---|---|---|
| 12/983,425 | 01/03/2011 | Natarajan Venkatakrishnan | 242313-2 (GECZ 201073US01 | 1349 |

27885 7590 10/27/2011
FAY SHARPE LLP
1228 Euclid Avenue, 5th Floor
The Halle Building
Cleveland, OH 44115

| EXAMINER |
|---|

| ART UNIT | PAPER NUMBER |
|---|---|
| 2192 | |

| MAIL DATE | DELIVERY MODE |
|---|---|
| 10/27/2011 | PAPER |

**Please find below and/or attached an Office communication concerning this application or proceeding.**

The time period for reply, if any, is set in the attached communication.

UNITED STATES PATENT AND TRADEMARK OFFICE

Commissioner for Patents
United States Patent and Trademark Office
P.O. Box 1450
Alexandria, VA 22313-1450
www.uspto.gov

FAY SHARPE LLP
1228 Euclid Avenue, 5th Floor
The Halle Building
Cleveland OH 44115

In re Application of
VENKATAKRISHNAN, Natarajan et al.
Application No. 12/983,425
Filed: January 3, 2011
For: **LOW COST AND FLEXIBLE ENERGY MANAGEMENT SYSTEM**

**DECISION ON PETITION TO MAKE SPECIAL UNDER THE GREEN TECHNOLOGY PILOT PROGRAM**

The petition filed October 5, 2011 has been treated as a petition under 37 CFR 1.102 to make the above-identified application special under the pilot program for applications pertaining to Green Technologies as set forth in 74 Federal Register Notice 64666 (December 8, 2009) and amended by 75 Federal Register Notice 28554 (May 21, 2010).

The petition is **DISMISSED**.

If reconsideration of this decision is desired, a petition for reconsideration must be filed within ONE (1) MONTH OR THIRTY (30) DAYS from the mail date of this decision, whichever is longer. No extension of this time limit can be granted under 37 CFR 1.136(a) or (b). The petition for reconsideration should include an exhaustive attempt to provide the lacking item(s) noted below, since, after a decision on the petition for reconsideration, no further reconsideration or review of the matter will be undertaken by the Director.

A grantable petition to make an application special under 37 CFR 1.102 and the pilot program as set forth in 74 FR 64666 must be directed to a nonprovisional application filed under 35 USC 111(a) or be a national stage entry under 35 USC 371, exclusive of any reissue applications and be filed prior to the date of the notice, December 8, 2009.

In order to qualify for special status, the following requirements must be met. 1) The application must have no more than 3 independent claims and no more than 20 total claims. 2) The application must not contain any multiple dependent claims. 3) The petition must state the basis for seeking special status, i.e., the claimed invention either: A) materially enhances the quality of the environment or B) materially contributes to: i) the discovery or development of renewable energy resources, ii) the more efficient utilization and conservation of energy resources, or iii) greenhouse gas emission reduction. 4) If the disclosure is not clear on its face that the claimed invention materially contributes under category (A) or (B), the petition must be accompanied by

a statement by the applicant, assignee, or an attorney/agent registered to practice before the Office explaining how the materiality standard is met. 5) A statement that applicant will agree to make an election without traverse in a telephonic interview if a restriction requirement is made by the examiner. 6) The petition to make special must be filed electronically. 7) The petition must be filed at least one day prior to the date that a first Office Action appears in the Patent Application Information Retrieval (PAIR) system. 8) The petition must be accompanied by a request for early publication in compliance with 37 CFR 1.219 and include the publication fee as set forth in 37 CFR 1.18(d).

The requirement for a fee for consideration of the petition to make special for applications pertaining to Green Technologies has been waived.

The petition lacks item(s) 4 above for the reasons explained in more detail below.

In the "Statement Concerning the Basis for the Special Status," petitioner states that "this application relates to energy management, and more particularly to a premises energy management system for management of household consumer appliances, as well as other energy consuming devices and/or systems found in the home, at times called herein as accessories or network accessories. It finds particular application to a device which controls operation of the accessories (e.g., consumer appliances, as well as other energy consuming devices and/or systems), and acts as a controller/gateway between a Utility company network and the consumer appliances, as well as other energy consuming devices and/ or systems. (See [0002])." However, these general statements fail to "explain[ ] how the materiality standard is met." Since the "disclosure is not clear on its face that the claimed invention contributes under category (A) or (B)," applicant is required to provide a more detail "[explanation] of how the materiality standard is met." This is because the claimed invention merely defines a data management system for transmitting data. Nothing in the claims relate to the utilization of renewable energy resources, reduce greenhouse gas emission, or contribute to more efficient utilization and conservation of energy resources. Furthermore, any request for reconsideration will be reviewed pursuant to Section II of the Pilot Program for Green Technologies as set forth in 74 Federal Register Notice 64666, which specifies that "materiality standard does not permit an applicant to speculate as to how a hypothetical end-user might specially apply the invention in a manner that could materially enhance the quality of the environment. Nor dies such standard permit an applicant to enjoy the benefit of advanced examination merely because some minor aspect of the claimed invention may enhance the quality of the environment."

Any reconsideration of this decision should be submitted through the USPTO electronic filing system, EFS-Web, and selecting the document description of "Petition for Green Tech Pilot" on the EFS-Web screen.

Any inquiry regarding this decision should be directed to Eddie C. Lee at (571) 272 - 1732.

/Eddie C. Lee/

Eddie C. Lee
Quality Assurance Specialist, TC 2100

**IN THE UNITED STATES PATENT AND TRADEMARK OFFICE**

| | |
|---|---|
| **First Named Inventor: Natarajan VENKATAKRISHNAN** | ) |
| **Confirmation No.: 1349** | ) |
| | ) |
| **Serial No.: 12/983,425** | ) |
| | ) |
| **Filing Date: 01-03-2011** | ) |
| | ) |
| **Atty Docket No.: 242313-2 (GECZ 201073US01)** | ) |

Commissioner for Patents
P.O. Box 1450
Alexandria, VA 22313-1450

**Request for Reconsideration**

SIR:

This is responsive to the Decision on Petition, dated as mailed 27 October 2011, in the above-referenced application.

Applicant respectfully requests reconsideration of Applicant's Petition to Make Special on the basis that the present invention materially contributes to the more efficient utilization and conservation of energy resources.

The Decision to Make Special Under the Green Technology Pilot Program (hereinafter "the Decision") states that the petition fails to explain how the materiality standard is met and alleges that the disclosure is not clear on its face that the claimed invention contributes under category (A) or (B). The Decision alleges that the claimed invention merely defines a data management system for transmitting data. The Decision further alleges that nothing in the claims relate to the utilization of renewable energy resources, reduce greenhouse gas emission or contribute to more efficient utilization and conservation of energy resources. Applicant does not agree with the comments made in the Decision.

Applicant respectfully submits that embodiments of the present invention relate to energy management, and more particularly to a premises energy management system for management of household consumer appliances, as well as other energy consuming devices and/or systems found in the home, at times called herein as accessories or network accessories. The present disclosure finds particular application to a device which controls operation of the accessories (e.g., consumer appliances, as well as other energy consuming devices and/or systems), and acts as a controller/gateway between a Utility company network and the consumer appliances, as well as other energy consuming devices and/or systems. The controller/gateway device to be discussed below is at times called herein a Home Energy Gateway (HEG). (see at least paragraph [0002]).

Smart technology generally relates to a class of technology that uses computer-based remote control and automation. These systems are made possible by two-way communication technology and computer processing and offer many benefits to utilities and consumers; mostly seen in big improvements in energy efficiency. Amongst several benefits, smart energy technologies allow for greater informational awareness and control of energy flow. This informational awareness allows consumers to interface with their energy consumption, providing new levels of detail on how, and how much, electricity is being consumed and at what cost in real time, and give them the tools to increase or decrease their consumption. It also allows utilities to more efficiently manage and adjust electricity transmission, reducing the likelihood of outages and congestion

while improving billing accuracy for consumers. Smart energy generally provides consumers and utilities a greater ability to adapt to changing market conditions for greater energy efficiency.

Currently Utility companies commonly charge a flat rate for energy, but with the increasing cost of fuel prices and high energy usage during certain parts of the day, Utility companies have to buy more energy to supply consumers during peak demand. Consequently, Utility companies are beginning to charge higher rates during peak demand. If peak demand can be lowered, then a potential cost savings can be achieved and the peak load that the Utility company has to accommodate is lessened. (see at least paragraph [0005]). As a result, consumers are provided with an incentive to use electricity at off-peak times rather than on-peak times and to reduce overall energy consumption of power consuming device in a home network at all times

Home energy management (e.g., HEM) systems are being used to reduce energy consumption in homes and buildings, in a consumer friendly/compatible manner. The current existing types of HEMs have significant disadvantages due to high consumer cost, low flexibility and increased system complexity. (see at least paragraph [0006]).

A method and system for controlling the operation of accessories in a home energy management system which manages a plurality of communication networks is provided. Schedule for operation of one or more of the accessories are generated by using a central controller and interacting with a user interface

found on a device separate from the central controller. (see at least paragraph [0013]).

A particular benefit of embodiments of the present invention, which uses the HEG without a dedicated or integrated display, is the ability to use a high quality display to view data and interact with appliances without having to pay for it separately, which allows consumers to better track energy consumption. This improved interface also allows the consumer to fine tune their response for different appliances with more detail than was possible over a typical appliance control screen. Such customization can be accomplished either in conjunction with energy prices, weather information, time of day, occupancy or other external parameter, or just as a user defined rule without any outside parameters. (see at least paragraphs [0067]-[0068]).

The embodiments disclosed herein provide for more efficient control of the operation of accessories in a home energy management system which manages a plurality of communication networks. Amongst several benefits, embodiments of the present invention allow for greater informational awareness and control of energy flow, which has been shown to encourage reductions in energy consumption, and results in greater energy efficiency on the part of consumers and utilities. As such, the present invention promotes the more efficient utilization of and conservation of energy.

The undersigned attorney may be contacted at the number below to facilitate the resolution of any matters. Please charge any fees that are incurred in connection with this Statement to deposit account no. 09-0470.

Respectfully submitted,

General Electric Company

By : /Allison W Mages/
Allison Weiner Mages
Reg. No. 57,275

Dated: November 23, 2011

GE Global Patent Operation
2 Corporate Drive, Suite 648
Shelton, CT 06484
203-944-6730

# UNITED STATES PATENT AND TRADEMARK OFFICE

UNITED STATES DEPARTMENT OF COMMERCE
United States Patent and Trademark Office
Address: COMMISSIONER FOR PATENTS
P.O. Box 1450
Alexandria, Virginia 22313-1450
www.uspto.gov

| APPLICATION NO. | FILING DATE | FIRST NAMED INVENTOR | ATTORNEY DOCKET NO. | CONFIRMATION NO. |
|---|---|---|---|---|
| 12/983,425 | 01/03/2011 | Natarajan Venkatakrishnan | 242313-2 (GECZ 201073US01 | 1349 |

27885 7590 12/09/2011
FAY SHARPE LLP
1228 Euclid Avenue, 5th Floor
The Halle Building
Cleveland, OH 44115

| EXAMINER |
|---|

| ART UNIT | PAPER NUMBER |
|---|---|
| 2192 | |

| MAIL DATE | DELIVERY MODE |
|---|---|
| 12/09/2011 | PAPER |

**Please find below and/or attached an Office communication concerning this application or proceeding.**

The time period for reply, if any, is set in the attached communication.

UNITED STATES PATENT AND TRADEMARK OFFICE

Commissioner for Patents
United States Patent and Trademark Office
P.O. Box 1450
Alexandria, VA 22313-1450
www.uspto.gov

12/09/11

FAY SHARPE LLP
1228 Euclid Avenue, 5th Floor
The Halle Building
Cleveland OH 44115

| | | |
|---|---|---|
| In re Application of | : | |
| Natarajan Venkatakrishnan et al. | : | DECISION ON PETITION |
| Application No. 12/983,425 | : | TO MAKE SPECIAL UNDER |
| Filed: January 03, 2011 | : | THE GREEN TECHNOLOGY |
| Attorney Docket No. 242313-2 (GECZ 201073US01 | : | PILOT PROGRAM |

This is a decision on the petition under 37 CFR 1.102, filed November 23, 2011, to make the above-identified application special under the pilot program for applications pertaining to Green Technologies as set forth in 74 Federal Register Notice 64666 (December 8, 2009) and amended by 75 Federal Register Notice 28554 (May 21, 2010) and 75 Federal Register Notice 69049 (November 10, 2010).

The petition is **GRANTED**.

A grantable petition to make an application special under 37 CFR 1.102 and the pilot program as set forth in 74 FR 64666 must be directed to a nonprovisional application filed under 35 USC 111(a) or be a national stage entry under 35 USC 371, exclusive of any reissue applications.

In order to qualify for special status, the following requirements must be met. 1) The application must have no more than 3 independent claims and no more than 20 total claims. 2) The application must not contain any multiple dependent claims. 3) The petition must state the basis for seeking special status, i.e., the claimed invention either: A) materially enhances the quality of the environment or B) materially contributes to: i) the discovery or development of renewable energy resources, ii) the more efficient utilization and conservation of energy resources, or iii) greenhouse gas emission reduction. 4) If the disclosure is not clear on its face that the claimed invention materially contributes under category (A) or (B), the petition must be accompanied by a statement by the applicant, assignee, or an attorney/agent registered to practice before the Office explaining how the materiality standard is met. 5) A statement that applicant will agree to make an election without traverse in a telephonic interview if a restriction requirement is made by the examiner. 6) The petition to make special must be filed electronically. 7) The petition must be filed at least one day prior to the date that a first Office Action appears in the Patent Application Information Retrieval (PAIR) system. 8) The petition must be accompanied by a request for early publication in compliance with 37 CFR 1.219 and include the publication fee as set forth in 37 CFR 1.18(d).

The requirement for a fee for consideration of the petition to make special for applications pertaining to Green Technologies has been waived.

The instant petition complies with items 1 – 8 above. Accordingly, the above-identified application has been accorded "special" status.

Telephone inquires concerning this decision should be directed to Blaine Copenheaver at 571-272-1156.

The application is being forwarded to the examiner for action on the merits commensurate with this decision.

/Blaine Copenheaver/

Blaine Copenheaver
Quality Assurance Specialist
Technology Center 1700

Doc Code: PET.GREEN
Document Description: Petition for Green Tech Pilot

PTO/SB/420 (03-11)

# PETITION TO MAKE SPECIAL UNDER THE GREEN TECHNOLOGY PILOT PROGRAM

| | | |
|---|---|---|
| Attorney Docket Number: 242313-3 (GECZ 201073US02) | Application Number (if known): 12/983,446 | Filing date: 01-03-2011 |

First Named Inventor: Natarajan VENKATAKRISHNAN

Title: LOW COST AND FLEXIBLE ENERGY MANAGEMENT SYSTEM WITH A SCHEDULING CAPABILITY

**APPLICANT HEREBY REQUESTS TO PARTICIPATE IN THE GREEN TECHNOLOGY PILOT PROGRAM FOR THE ABOVE-IDENTIFIED APPLICATION. See Instruction Sheet on page 2.**

This petition must be timely filed electronically using the USPTO electronic filing system, EFS-Web.

1. By filing this petition:

   **Applicant is requesting early publication: Applicant hereby requests early publication under 37 CFR 1.219 and the publication fee set forth in 37 CFR 1.18(d) accompanies this request.**

2. By filing this petition: applicant is agreeing to make an election without traverse in a telephonic interview and elect an invention that meets the eligibility requirements for the Green Technology Pilot Program, if the Office determines that the claims are not obviously directed to a single invention. See Instruction Sheet.

3. This request is accompanied by statements of special status for the eligibility requirement.

4. The application contains no more than three (3) independent claims and twenty (20) total claims.

5. The application does not contain any multiple dependent claims.

6. Other attachments: Statement Concerning the Basis for the Special Status

| | |
|---|---|
| Signature /Allison W. Mages/ | Date September 30, 2011 |
| Name (Print/Typed) Allison W. Mages | Registration Number 57,275 |

*Note: Signatures of all the inventors or assignees of record of the entire interest or their representative(s) are required in accordance with 37 CFR 1.33 and 11.18. Please see 37 CFR 1.4(d) for the form of the signature. If necessary, submit multiple forms for more than one signature, see below*.*

☐ *Total of _____ forms are submitted.

*If you need assistance in completing the form, call 1-800-PTO-9199 and select option 2.*

**IN THE UNITED STATES PATENT AND TRADEMARK OFFICE**

| | |
|---|---|
| **First Named Inventor: Natarajan VENKATAKRISHNAN** | ) |
| **Confirmation No.: 1388** | ) |
| | ) |
| **Serial No.: 12/983,446** | ) |
| | ) |
| **Filing Date: 01-03-2011** | ) |
| | ) |
| **Atty Docket No.: 242313-3 (GECZ 201073US02)** | ) |

VIA EFS
Commissioner for Patents
P.O. Box 1450
Alexandria, VA 22313-1450

**Statement Concerning the Basis for the Special Status**

SIR:

This application relates to energy management, and more particularly to a premises energy management system for management of household consumer appliances, as well as other energy consuming devices and/or systems found in the home, at times called herein as accessories or network accessories. It finds particular application to a device which controls operation of the accessories (e.g., consumer appliances, as well as other energy consuming devices and/or systems), and acts as a controller/gateway between a Utility company network and the consumer appliances, as well as other energy consuming devices and/or systems. (See [0002])

Therefore, Applicant respectfully submits that Special Status is sought on the basis that the present invention materially contributes to the more efficient utilization and conservation of energy resources.

The undersigned representative may be contacted at the number below to facilitate the resolution of any matters. Please charge any fees that are incurred in connection with this Statement to deposit account no. 09-0470.

Respectfully submitted,

General Electric Company

By : /Allison W. Mages/
Allison W. Mages
Reg. No. 57,275

Dated: September 30, 2011

GE Global Patent Operation
2 Corporate Drive, Suite 648
Shelton, CT 06484
203-944-6730

UNITED STATES PATENT AND TRADEMARK OFFICE

UNITED STATES DEPARTMENT OF COMMERCE
United States Patent and Trademark Office
Address: COMMISSIONER FOR PATENTS
P.O. Box 1450
Alexandria, Virginia 22313-1450
www.uspto.gov

| APPLICATION NO. | FILING DATE | FIRST NAMED INVENTOR | ATTORNEY DOCKET NO. | CONFIRMATION NO. |
|---|---|---|---|---|
| 12/983,446 | 01/03/2011 | Natarajan Venkatakrishnan | 242313-3 (GECZ 201073US02 | 1388 |

27885 7590 10/13/2011
FAY SHARPE LLP
1228 Euclid Avenue, 5th Floor
The Halle Building
Cleveland, OH 44115

| EXAMINER |
|---|
| DECADY, ALBERT |

| ART UNIT | PAPER NUMBER |
|---|---|
| 2121 | |

| MAIL DATE | DELIVERY MODE |
|---|---|
| 10/13/2011 | PAPER |

**Please find below and/or attached an Office communication concerning this application or proceeding.**

The time period for reply, if any, is set in the attached communication.

UNITED STATES PATENT AND TRADEMARK OFFICE

Commissioner for Patents
United States Patent and Trademark Office
P.O. Box 1450
Alexandria, VA 22313-1450
www.uspto.gov

FAY SHARPE LLP
1228 Euclid Avenue, 5th Floor
The Halle Building
Cleveland OH 44115

| | | |
|---|---|---|
| In re Application of | : | |
| VENKATAKRISHNAN, Natarajan et al. | : | **DECISION ON PETITION** |
| Application No. 12/983,446 | : | **TO MAKE SPECIAL UNDER** |
| Filed: January 3, 2011 | : | **THE GREEN TECHNOLOGY** |
| For: **LOW COST AND FLEXIBLE ENERGY MANAGEMENT SYSTEM WITH A SCHEDULING CAPABILITY** | : | **PILOT PROGRAM** |

The petition filed September 30, 2011 has been treated as a petition under 37 CFR 1.102 to make the above-identified application special under the pilot program for applications pertaining to Green Technologies as set forth in 74 Federal Register Notice 64666 (December 8, 2009) and amended by 75 Federal Register Notice 28554 (May 21, 2010).

The petition is **DISMISSED**.

If reconsideration of this decision is desired, a petition for reconsideration must be filed within ONE (1) MONTH OR THIRTY (30) DAYS from the mail date of this decision, whichever is longer. No extension of this time limit can be granted under 37 CFR 1.136(a) or (b). The petition for reconsideration should include an exhaustive attempt to provide the lacking item(s) noted below, since, after a decision on the petition for reconsideration, no further reconsideration or review of the matter will be undertaken by the Director.

A grantable petition to make an application special under 37 CFR 1.102 and the pilot program as set forth in 74 FR 64666 must be directed to a nonprovisional application filed under 35 USC 111(a) or be a national stage entry under 35 USC 371, exclusive of any reissue applications and be filed prior to the date of the notice, December 8, 2009.

In order to qualify for special status, the following requirements must be met. 1) The application must have no more than 3 independent claims and no more than 20 total claims. 2) The application must not contain any multiple dependent claims. 3) The petition must state the basis for seeking special status, i.e., the claimed invention either: A) materially enhances the quality of the environment or B) materially contributes to: i) the discovery or development of renewable energy resources, ii) the more efficient utilization and conservation of energy resources, or iii)

greenhouse gas emission reduction. 4) If the disclosure is not clear on its face that the claimed invention materially contributes under category (A) or (B), the petition must be accompanied by a statement by the applicant, assignee, or an attorney/agent registered to practice before the Office explaining how the materiality standard is met. 5) A statement that applicant will agree to make an election without traverse in a telephonic interview if a restriction requirement is made by the examiner. 6) The petition to make special must be filed electronically. 7) The petition must be filed at least one day prior to the date that a first Office Action appears in the Patent Application Information Retrieval (PAIR) system. 8) The petition must be accompanied by a request for early publication in compliance with 37 CFR 1.219 and include the publication fee as set forth in 37 CFR 1.18(d).

The requirement for a fee for consideration of the petition to make special for applications pertaining to Green Technologies has been waived.

The petition lacks item(s) 4 above for the reasons explained in more detail below.

In the "Statement Concerning the Basis for the Special Status," petitioner states that "the application relates to energy management, and more particularly to a premises energy management system form management of household consumer appliances, as well as other energy consuming devise and/or systems found in the home, at times called herein as accessories or network accessories. It finds particular application to a device which controls operation of the accessories (e.g., consumer appliances, as well as other energy consuming devices and/or systems), and acts as a controller/gateway between a Utility company network and the consumer appliances, as well as other energy consuming devices and/or systems (See [0002])." These general statements fail to "explain[ ] how the materiality standard is met." Since the "disclosure is not clear on its face that the claimed invention contributes under category (A) or (B)," applicant is required to provide a more detail "[explanation] of how the materiality standard is met." This is because the claimed invention merely "generat[es] a plurality of schedules" then after the steps of "communicating," "storing" and "selecting," "load[s] the selected schedule into the accessory." Nothing in the claims relate to the utilization of renewable energy resources, reduce greenhouse gas emission or contribute to more efficient utilization and conservation of energy resources. Furthermore, any request for reconsideration will be reviewed pursuant to Section II of the Pilot Program for Green Technologies as set forth in 74 Federal Register Notice 64666, which specifies that "materiality standard does not permit an applicant to speculate as to how a hypothetical end-user might specially apply the invention in a manner that could materially enhance the quality of the environment. Nor dies such standard permit an applicant to enjoy the benefit of advanced examination merely because some minor aspect of the claimed invention may enhance the quality of the environment."

Any reconsideration of this decision should be submitted through the USPTO electronic filing system, EFS-Web, and selecting the document description of "Petition for Green Tech Pilot" on the EFS-Web screen.

Any inquiry regarding this decision should be directed to Eddie C. Lee at (571) 272 - 1732.

/Eddie C. Lee/

Eddie C. Lee
Quality Assurance Specialist, TC 2100

**IN THE UNITED STATES PATENT AND TRADEMARK OFFICE**

| | |
|---|---|
| **First Named Inventor: Natarajan VENKATAKRISHNAN** | ) |
| **Confirmation No.: 1388** | ) |
| | ) |
| **Serial No.: 12/983,446** | ) |
| | ) |
| **Filing Date: 01-03-2011** | ) |
| | ) |
| **Atty Docket No.: 242313-3 (GECZ 201073US02)** | ) |

Commissioner for Patents
P.O. Box 1450
Alexandria, VA 22313-1450

**Request for Reconsideration**

SIR:

This is responsive to the Decision on Petition, dated as mailed 13 October 2011, in the above-referenced application.

Applicant respectfully requests reconsideration of Applicant's Petition to Make Special on the basis that the present invention materially contributes to the more efficient utilization and conservation of energy resources.

The Decision to Make Special Under the Green Technology Pilot Program (hereinafter "the Decision") states that the petition fails to explain how the materiality standard is met and alleges that the disclosure is not clear on its face that the claimed invention contributes under category (A) or (B). The Decision alleges that the claimed invention merely generates a plurality of schedules the after the steps of communicating, storing and selecting, loads the selected schedule into the accessory. The Decision further alleges that nothing in the claims relate to the utilization of renewable energy resources, reduce greenhouse gas emission or contribute to more efficient utilization and

conservation of energy resources. Applicant does not agree with the comments made in the Decision.

Applicant respectfully submits that embodiments of the present invention relate to energy management, and more particularly to a premises energy management system for management of household consumer appliances, as well as other energy consuming devices and/or systems found in the home, at times called herein as accessories or network accessories. The present disclosure finds particular application to a device which controls operation of the accessories (e.g., consumer appliances, as well as other energy consuming devices and/or systems), and acts as a controller/gateway between a Utility company network and the consumer appliances, as well as other energy consuming devices and/or systems. The controller/gateway device to be discussed below is at times called herein a Home Energy Gateway (HEG). (see at least paragraph [0002]).

Smart technology generally relates to a class of technology that uses computer-based remote control and automation. These systems are made possible by two-way communication technology and computer processing and offer many benefits to utilities and consumers; mostly seen in big improvements in energy efficiency. Amongst several benefits, smart energy technologies allow for greater informational awareness and control of energy flow. This informational awareness allows consumers to interface with their energy consumption, providing new levels of detail on how, and how much, electricity is being consumed and at what cost in real time, and give them the tools to increase or

decrease their consumption. It also allows utilities to more efficiently manage and adjust electricity transmission, reducing the likelihood of outages and congestion while improving billing accuracy for consumers. Smart energy generally provides consumers and utilities a greater ability to adapt to changing market conditions for greater energy efficiency.

Currently Utility companies commonly charge a flat rate for energy, but with the increasing cost of fuel prices and high energy usage during certain parts of the day, Utility companies have to buy more energy to supply consumers during peak demand. Consequently, Utility companies are beginning to charge higher rates during peak demand. If peak demand can be lowered, then a potential cost savings can be achieved and the peak load that the Utility company has to accommodate is lessened. (see at least paragraph [0005]). As a result, consumers are provided with an incentive to use electricity at off-peak times rather than on-peak times and to reduce overall energy consumption of power consuming device in a home network at all times

Home energy management (e.g., HEM) systems are being used to reduce energy consumption in homes and buildings, in a consumer friendly/compatible manner. The current existing types of HEMs have significant disadvantages due to high consumer cost, low flexibility and increased system complexity. (see at least paragraph [0006]).

A method and system for controlling the operation of accessories in a home energy management system which manages a plurality of communication networks is provided. Schedule for operation of one or more of the accessories

are generated by using a central controller and interacting with a user interface found on a device separate from the central controller. (see at least paragraph [0013]).

A particular benefit of embodiments of the present invention, which uses the HEG without a dedicated or integrated display, is the ability to use a high quality display to view data and interact with appliances without having to pay for it separately, which allows consumers to better track energy consumption. This improved interface also allows the consumer to fine tune their response for different appliances with more detail than was possible over a typical appliance control screen. Such customization can be accomplished either in conjunction with energy prices, weather information, time of day, occupancy or other external parameter, or just as a user defined rule without any outside parameters. (see at least paragraphs [0067]-[0068]).

The embodiments disclosed herein provide for more efficient control of the operation of accessories in a home energy management system which manages a plurality of communication networks. Amongst several benefits, embodiments of the present invention allow for greater informational awareness and control of energy flow, which has been shown to encourage reductions in energy consumption, and results in greater energy efficiency on the part of consumers and utilities. As such, the present invention promotes the more efficient utilization of and conservation of energy.

The undersigned attorney may be contacted at the number below to facilitate the resolution of any matters. Please charge any fees that are incurred in connection with this Statement to deposit account no. 09-0470.

Respectfully submitted,

General Electric Company

By : /Allison W Mages/
Allison Weiner Mages
Reg. No. 57,275

Dated: November 10, 2011

GE Global Patent Operation
2 Corporate Drive, Suite 648
Shelton, CT 06484
203-944-6730

UNITED STATES PATENT AND TRADEMARK OFFICE

UNITED STATES DEPARTMENT OF COMMERCE
United States Patent and Trademark Office
Address: COMMISSIONER FOR PATENTS
P.O. Box 1450
Alexandria, Virginia 22313-1450
www.uspto.gov

| APPLICATION NO. | FILING DATE | FIRST NAMED INVENTOR | ATTORNEY DOCKET NO. | CONFIRMATION NO. |
|---|---|---|---|---|
| 12/983,446 | 01/03/2011 | Natarajan Venkatakrishnan | 242313-3 (GECZ 201073US02 | 1388 |

27885 7590 11/17/2011
FAY SHARPE LLP
1228 Euclid Avenue, 5th Floor
The Halle Building
Cleveland, OH 44115

| EXAMINER |
|---|
| DECADY, ALBERT |

| ART UNIT | PAPER NUMBER |
|---|---|
| 2121 | |

| MAIL DATE | DELIVERY MODE |
|---|---|
| 11/17/2011 | PAPER |

**Please find below and/or attached an Office communication concerning this application or proceeding.**

The time period for reply, if any, is set in the attached communication.

UNITED STATES PATENT AND TRADEMARK OFFICE

Commissioner for Patents
United States Patent and Trademark Office
P.O. Box 1450
Alexandria, VA 22313-1450
www.uspto.gov

FAY SHARPE LLP
1228 Euclid Avenue, 5th Floor
The Halle Building
Cleveland OH 44115

NOV 17 2011

| | | |
|---|---|---|
| In re Application of | : | |
| Venkatakrishnan et al. | : | DECISION ON PETITION |
| Application No. 12/983,446 | : | TO MAKE SPECIAL UNDER |
| Filed: 1/3/2011 | : | THE GREEN TECHNOLOGY |
| Attorney Docket No. **242313-3 (GECZ 201073US02** | : | PILOT PROGRAM |

This is a decision on the request for reconsideration filed 11/10/2011, to make the above-identified application special under the pilot program for applications pertaining to Green Technologies as set forth in 74 Federal Register Notice 64666 (December 8, 2009) and amended by 75 Federal Register Notice 28554 (May 21, 2010) and 75 Federal Register Notice 69049 (November 10, 2010).

The petition is **GRANTED**.

A grantable petition to make an application special under 37 CFR 1.102 and the pilot program as set forth in 74 FR 64666 must be directed to a nonprovisional application filed under 35 USC 111(a) or be a national stage entry under 35 USC 371, exclusive of any reissue applications.

In order to qualify for special status, the following requirements must be met. 1) The application must have no more than 3 independent claims and no more than 20 total claims. 2) The application must not contain any multiple dependent claims. 3) The petition must state the basis for seeking special status, i.e., the claimed invention either: A) materially enhances the quality of the environment or B) materially contributes to: i) the discovery or development of renewable energy resources, ii) the more efficient utilization and conservation of energy resources, or iii) greenhouse gas emission reduction. 4) If the disclosure is not clear on its face that the claimed invention materially contributes under category (A) or (B), the petition must be accompanied by a statement by the applicant, assignee, or an attorney/agent registered to practice before the Office explaining how the materiality standard is met. 5) A statement that applicant will agree to make an election without traverse in a telephonic interview if a restriction requirement is made by the examiner. 6) The petition to make special must be filed electronically. 7) The petition must be filed at least one day prior to the date that a first Office Action appears in the Patent

Application Information Retrieval (PAIR) system. 8) The petition must be accompanied by a request for early publication in compliance with 37 CFR 1.219 and include the publication fee as set forth in 37 CFR 1.18(d).

The requirement for a fee for consideration of the petition to make special for applications pertaining to Green Technologies has been waived.

The instant petition complies with items 1 – 8 above. Accordingly, the above-identified application has been accorded "special" status.

Telephone inquires concerning this decision should be directed to Tom Dunn at 571-272-1171.

The application is being forwarded to the Technology Center Art Unit 2121 for action on the merits commensurate with this decision.

/Tom Dunn/

Tom Dunn
Quality Assurance Specialist
Technology Center 1700

UNITED STATES PATENT AND TRADEMARK OFFICE

Commissioner for Patents
United States Patent and Trademark Office
P.O. Box 1450
Alexandria, VA 22313-1450
www.uspto.gov

In re Application of
Shimon Mizrahi

Application No. 12983449

Filed: January 3,2011

Attorney Docket No. 1431-005

:DECISION ON PETITION TO MAKE SPECIAL
:UNDER 37 CFR 1.102(c)(1)

This is a decision on the electronic petition under 37 CFR 1.102 (c)(1), filed 15-FEB-2011 to make the above-identified application special based on applicant's age as set forth in MPEP § 708.02, Section IV.

The petition is **GRANTED**.

A grantable petition to make an application special under 37 CFR 1.102(c)(1), MPEP § 708.02, Section IV: Applicant's Age must include a statement by applicant or a registered practitioner having evidence that applicant is at least 65 years of age. No fee is required.

Accordingly, the above-identified application has been accorded "special" status and will be taken up for action by the examiner upon the completion of all pre-examination processing.

Telephone inquiries concerning this electronic decision should be directed to the Electronic Business Center at 866-217-9197.

All other inquiries concerning either the examination or status of the application should be directed to the Technology Center.

**IN THE UNITED STATES PATENT AND TRADEMARK OFFICE**

| | |
|---|---|
| **First Named Inventor: Natarajan VENKATAKRISHNAN** | ) |
| **Confirmation No.: 1435** | ) |
| | ) |
| **Serial No.: 12/983,471** | ) |
| | ) |
| **Filing Date: 01-03-2011** | ) |
| | ) |
| **Atty Docket No.: 242313-4 (GECZ 201073US03)** | ) |

VIA EFS
Commissioner for Patents
P.O. Box 1450
Alexandria, VA 22313-1450

**Statement Concerning the Basis for the Special Status**

SIR:

The following disclosure relates to energy management, and more particularly to a premises energy management system for management of household consumer appliances, as well as other energy consuming devices and/or systems found in the home, at times called herein as accessories or network accessories. The present disclosure finds particular application to a device which controls operation of the accessories (e.g., consumer appliances, as well as other energy consuming devices and/or systems), and acts as a controller/gateway between a Utility company network and the consumer appliances, as well as other energy consuming devices and/or systems. The controller/gateway device to be discussed below is at times called herein a Home Energy Gateway (HEG). (See [0002]).

Currently Utility companies commonly charge a flat rate for energy, but with the increasing cost of fuel prices and high energy usage during certain parts

of the day, Utility companies have to buy more energy to supply consumers during peak demand. Consequently, Utility companies are beginning to charge higher rates during peak demand. If peak demand can be lowered, then a potential cost savings can be achieved and the peak load that the Utility company has to accommodate is lessened. (See [0003]).

Some electrical Utility companies are moving to an Advanced Metering Infrastructure (AMI) system which needs to communicate with appliances, HVAC, water heaters, etc., in a home or office building. All electrical Utility companies (more than 3,000 in the US) will not be using the same communication method and protocol to signal in the AMI system. Similarly, known systems do not communicate directly with the appliance using a variety of communication methods and protocols, nor is a modular and standard method created for communication devices to interface and to communicate selectable operational modes to the main controller of the appliance. (See [0005]).

Home energy management (e.g., HEM) systems are being used to reduce energy consumption in homes and buildings, in a consumer friendly/compatible manner. Existing HEMs are commonly placed in one of two general categories: In the first category, the HEM is in the form of a special custom configured computer with an integrated display, which communicates to devices in the home and stores data, and also has simple algorithms to enable energy reduction. In the second category, the HEM is in the form of a low cost router/gateway device in a home that collects information from devices within the home and sends it to

a remote server and in return receives control commands from the remote server and transmits it to energy consuming devices in the home. (See [0006]).

Both of the current existing types have significant disadvantages due to high consumer cost, low flexibility and increased system complexity. Further, these HEMs do not take into consideration that data bandwidth required to support a network of energy consuming devices is much smaller than the data bandwidth required for the networking of consumer electronics products, which is usually high bandwidth and high speed. The networking standards, including the physical layer, networking layer and application layers are therefore not optimized for the end use. (See [0010]).

Consumers want to be able to view and control energy consumption information through a variety of consumer electronic devices available in the home. To enable this it is required that energy consumption and control information must be easily transferrable from the networks of energy consuming devices to networks of consumer electronics devices. In addition, consumers are used to interacting with consumer electronics devices. So the consumer interaction data on a consumer electronics device should be able to flow into the network for energy consuming devices and to enable command and control of the energy consuming devices which has not been a consideration of existing systems. (See [0011]).

The present disclosure is intended to address these and other issues, by providing an energy data management control system configured to allow a user

to better control operation of the system among a plurality of modes. (See [0012]).

By way of example, in one embodiment, the system comprises a plurality of communication networks configured to transmit and receive data, at least some of the communication networks operating using communication protocols distinct from other ones of the communication networks. The system further comprises a home energy gateway configured as a single point of control that includes a plurality of interface channels to enable communication by the communication networks to the home energy gateway. One of the communication networks includes a user interface that allows a user to enter instructions that control operation of the system among a plurality of selectable modes. (See Claim 1).

Accordingly, Applicant respectfully submits that Special Status is sought on the basis that the embodiments disclosed in the present application materially contribute to the more efficient utilization and conservation of energy resources. Said embodiments provide consumers with an improved method for managing energy usage of one or more home appliances. Amongst several benefits, said embodiments allow for greater informational awareness and control of energy resources in conjunction with appliance operations, which has been shown to encourage reductions in energy consumption, and results in greater energy efficiency on the part of consumers and utilities.

The undersigned representative may be contacted at the number below to facilitate the resolution of any matters. Please charge any fees that are incurred in connection with this Statement to deposit account no. 09-0470.

Respectfully submitted,

General Electric Company

By : /Allison W. Mages/
Allison W. Mages
Reg. No. 57,275

Dated: February 1, 2012

GE Global Patent Operation
2 Corporate Drive, Suite 648
Shelton, CT 06484
203-944-6730

Doc Code: PET.GREEN
Document Description: Petition for Green Tech Pilot

PTO/SB/420 (03-11)

# PETITION TO MAKE SPECIAL UNDER THE GREEN TECHNOLOGY PILOT PROGRAM

| | | |
|---|---|---|
| Attorney Docket Number: 242313-4 (GECZ 201073US03) | Application Number (if known): 12/983,471 | Filing date: 01-03-2011 |

First Named Inventor: Natarajan VENKATAKRISHNAN

Title: LOW COST AND FLEXIBLE ENERGY MANAGEMENT SYSTEM PROVIDING USER CONTROL ARRANGEMENT IN A PLURALITY OF MODES

**APPLICANT HEREBY REQUESTS TO PARTICIPATE IN THE GREEN TECHNOLOGY PILOT PROGRAM FOR THE ABOVE-IDENTIFIED APPLICATION. See Instruction Sheet on page 2.**

This petition must be timely filed electronically using the USPTO electronic filing system, EFS-Web.

1. By filing this petition:

   **Applicant is requesting early publication: Applicant hereby requests early publication under 37 CFR 1.219 and the publication fee set forth in 37 CFR 1.18(d) accompanies this request.**

2. By filing this petition: applicant is agreeing to make an election without traverse in a telephonic interview and elect an invention that meets the eligibility requirements for the Green Technology Pilot Program, if the Office determines that the claims are not obviously directed to a single invention. See Instruction Sheet.

3. This request is accompanied by statements of special status for the eligibility requirement.

4. The application contains no more than three (3) independent claims and twenty (20) total claims.

5. The application does not contain any multiple dependent claims.

6. Other attachments: Statement Concerning the Basis for the Special Status

| | |
|---|---|
| Signature /Allison W. Mages/ | Date February 1, 2012 |
| Name (Print/Typed) Allison W. Mages | Registration Number 57,275 |

*Note: Signatures of all the inventors or assignees of record of the entire interest or their representative(s) are required in accordance with 37 CFR 1.33 and 11.18. Please see 37 CFR 1.4(d) for the form of the signature. If necessary, submit multiple forms for more than one signature, see below*.*

☐ *Total of _____ forms are submitted.

*If you need assistance in completing the form, call 1-800-PTO-9199 and select option 2.*

UNITED STATES PATENT AND TRADEMARK OFFICE

UNITED STATES DEPARTMENT OF COMMERCE
United States Patent and Trademark Office
Address: COMMISSIONER FOR PATENTS
P.O. Box 1450
Alexandria, Virginia 22313-1450
www.uspto.gov

| APPLICATION NO. | FILING DATE | FIRST NAMED INVENTOR | ATTORNEY DOCKET NO. | CONFIRMATION NO. |
|---|---|---|---|---|
| 12/983,471 | 01/03/2011 | Natarajan Venkatakrishnan | 242313-4 (GECZ 201073US03 | 1435 |

27885 7590 02/16/2012
FAY SHARPE LLP
1228 Euclid Avenue, 5th Floor
The Halle Building
Cleveland, OH 44115

| EXAMINER |
|---|
| HWANG, JOON H |

| ART UNIT | PAPER NUMBER |
|---|---|
| 2447 | |

| MAIL DATE | DELIVERY MODE |
|---|---|
| 02/16/2012 | PAPER |

**Please find below and/or attached an Office communication concerning this application or proceeding.**

The time period for reply, if any, is set in the attached communication.

UNITED STATES PATENT AND TRADEMARK OFFICE

Commissioner for Patents
United States Patent and Trademark Office
P.O. Box 1450
Alexandria, VA 22313-1450
www.uspto.gov

MAILED

FEB 10 2012

DIRECTOR OFFICE
TECHNOLOGY CENTER 2400

FAY SHARPE LLP
1228 Euclid Avenue, 5th Floor
The Halle Building
Cleveland OH 44115

In re Application of : VENKATAKRISHNAN, N. et. al.

Application No. **12/983,471**
Filed: January 03, 2011
Att. Docket No. : 242313-4 (GECZ 201073US03)

DECISION ON PETITION TO MAKE SPECIAL UNDER THE GREEN TECHNOLOGY PILOT PROGRAM

Title of Invention: LOW COST AND FLEXIBLE ENERGY MANAGEMENT SYSTEM PROVIDING USER CONTROL ARRANGEMENT IN A PLURALITY OF MODES

This is a decision on the petition under 37 CFR 1.102, filed **February 01, 2012**, to make the above-identified application special under the pilot program for applications pertaining to Green Technologies as set forth 74 Federal Register Notice 64666 (December 8, 2009).

The petition is **GRANTED**.

A grantable petition to make an application special under 37 CFR 1.102 and the pilot program as set forth in 74 FR 64666 must be directed to a nonprovisional application filed under 35 USC 111(a) or be a national stage entry under 35 USC 371, exclusive of any reissue applications and be filed prior to the date of the notice, December 8, 2009.

In order to qualify for special status, the following requirements must be met. 1) The application must have no more than 3 independent claims and no more than 20 total claims. 2) The application must not contain any multiple dependent claims. 3) The petition must state the basis for seeking special status, i.e., the claimed invention either: A) materially enhances the quality of the environment or B) materially contributes to: i) the discovery or development of renewable energy resources, ii) the more efficient utilization and conservation of energy resources, or iii) greenhouse gas emission reduction. 4) If the disclosure is not clear on its face that the claimed invention materially contributes under category (A) or (B), the petition must be accompanied by a statement by the applicant, assignee, or an attorney/agent registered to practice before the Office explaining how the materiality standard is met. 5) A statement that applicant will agree to make an election without traverse in a telephonic interview if a restriction requirement is made by the examiner. 6) The petition to make special must be filed electronically. 7) The petition must be filed at least one day prior to the date that a first Office Action appears in the Patent

Application Information Retrieval (PAIR) system. 8) The petition must be accompanied by a request for early publication in compliance with 37 CFR 1.219 and include the publication fee as set forth in 37 CFR 1.18(d).

The requirement for a fee for consideration of the petition to make special for applications pertaining to Green Technologies has been waived.

The instant petition complies with items 1 – 8 above. Accordingly, the above-identified application has been accorded "special" status.

Telephone inquires concerning this decision should be directed to Beatriz Prieto at 571-272-3902.

The application is being forwarded to the Technology Center 2400 for action on the merits commensurate with this decision.

/Beatriz Prieto/
Beatriz Prieto
Quality Assurance Specialist
Technology Center 2400

UNITED STATES PATENT AND TRADEMARK OFFICE

UNITED STATES DEPARTMENT OF COMMERCE
United States Patent and Trademark Office
Address: COMMISSIONER FOR PATENTS
P.O. Box 1450
Alexandria, Virginia 22313-1450
www.uspto.gov

| APPLICATION NO. | FILING DATE | FIRST NAMED INVENTOR | ATTORNEY DOCKET NO. | CONFIRMATION NO. |
|---|---|---|---|---|
| 12/983,471 | 01/03/2011 | Natarajan Venkatakrishnan | 242313-4 (GECZ 201073US03 | 1435 |

27885 7590 02/15/2012
FAY SHARPE LLP
1228 Euclid Avenue, 5th Floor
The Halle Building
Cleveland, OH 44115

| EXAMINER |
|---|
| HWANG, JOON H |

| ART UNIT | PAPER NUMBER |
|---|---|
| 2447 | |

| MAIL DATE | DELIVERY MODE |
|---|---|
| 02/15/2012 | PAPER |

**Please find below and/or attached an Office communication concerning this application or proceeding.**

The time period for reply, if any, is set in the attached communication.

UNITED STATES PATENT AND TRADEMARK OFFICE

Commissioner for Patents
United States Patent and Trademark Office
P.O. Box 1450
Alexandria, VA 22313-1450
www.uspto.gov

FAY SHARPE LLP
1228 Euclid Avenue, 5th Floor
The Halle Building
Cleveland OH 44115

2/15/12

| | | |
|---|---|---|
| In re Application of | : | |
| Natarajan Venkatakrishnan et al. | : | DECISION ON PETITION |
| Application No. 12/983,471 | : | TO MAKE SPECIAL UNDER |
| Filed: January 03, 2011 | : | THE GREEN TECHNOLOGY |
| Attorney Docket No. 242313-4 (GECZ 201073US03 | : | PILOT PROGRAM |

This is a decision on the petition under 37 CFR 1.102, filed February 01, 2012, to make the above-identified application special under the pilot program for applications pertaining to Green Technologies as set forth in 74 Federal Register Notice 64666 (December 8, 2009) and amended by 75 Federal Register Notice 28554 (May 21, 2010), 75 Federal Register Notice 69049 (November 10, 2010) and 76 Federal Register Notice 77979 (December 15, 2011).

The petition is **GRANTED**.

A grantable petition to make an application special under 37 CFR 1.102 and the pilot program as set forth in 74 FR 64666 must be directed to a nonprovisional application filed under 35 USC 111(a) or be a national stage entry under 35 USC 371, exclusive of any reissue applications.

In order to qualify for special status, the following requirements must be met. 1) The application must have no more than 3 independent claims and no more than 20 total claims. 2) The application must not contain any multiple dependent claims. 3) The petition must state the basis for seeking special status, i.e., the claimed invention either: A) materially enhances the quality of the environment or B) materially contributes to: i) the discovery or development of renewable energy resources, ii) the more efficient utilization and conservation of energy resources, or iii) greenhouse gas emission reduction. 4) If the disclosure is not clear on its face that the claimed invention materially contributes under category (A) or (B), the petition must be accompanied by a statement by the applicant, assignee, or an attorney/agent registered to practice before the Office explaining how the materiality standard is met. 5) A statement that applicant will agree to make an election without traverse in a telephonic interview if a restriction requirement is made by the examiner. 6) The petition to make special must be filed electronically. 7) The petition must be filed at least one day prior to the date that a first Office Action appears in the Patent Application Information Retrieval (PAIR) system. 8) The petition must be accompanied by a request for early publication in compliance with 37 CFR 1.219 and include the publication fee as set forth in 37 CFR 1.18(d).

The requirement for a fee for consideration of the petition to make special for applications pertaining to Green Technologies has been waived.

The instant petition complies with items 1 – 8 above. Accordingly, the above-identified application has been accorded "special" status.

Telephone inquires concerning this decision should be directed to Blaine Copenheaver at 571-272-1156.

/Blaine Copenheaver/

Blaine Copenheaver
Quality Assurance Specialist
Technology Center 1700

**IN THE UNITED STATES PATENT AND TRADEMARK OFFICE**

| | |
|---|---|
| **First Named Inventor: Natarajan VENKATAKRISHNAN** | ) |
| **Confirmation No.: 1472** | ) |
| | ) |
| **Serial No.: 12/983,488** | ) |
| | ) |
| **Filing Date: 01-03-2011** | ) |
| | ) |
| **Atty Docket No.: 242313-5 (GECZ 201073US)** | ) |

VIA EFS
Commissioner for Patents
P.O. Box 1450
Alexandria, VA 22313-1450

**Statement Concerning the Basis for the Special Status**

SIR:

The following application relates to energy management, and more particularly to a premises energy management system for management of household consumer appliances, as well as other energy consuming devices and/or systems found in the home, at times called herein as accessories or network accessories. The present application is particularly useful for a device which controls operation of the accessories (e.g., consumer appliances, as well as other energy consuming devices and/or systems), and acts as a controller/gateway between a Utility company network and the consumer appliances, as well as other energy consuming devices and/or systems. The controller/gateway device to be discussed below is at times called herein a Home Energy Gateway (HEG). (See [0002])

Applicant respectfully submits that Special Status is sought on the basis that the present invention materially contributes to the more efficient utilization and conservation of energy resources.

The undersigned representative may be contacted at the number below to facilitate the resolution of any matters. Please charge any fees that are incurred in connection with this Statement to deposit account no. 09-0470.

Respectfully submitted,

General Electric Company

By : /Allison W. Mages/
Allison W. Mages
Reg. No. 57,275

Dated: October 29, 2011

GE Global Patent Operation
2 Corporate Drive, Suite 648
Shelton, CT 06484
203-944-6730

Doc Code: PET.GREEN
Document Description: Petition for Green Tech Pilot

PTO/SB/420 (03-11)

# PETITION TO MAKE SPECIAL UNDER THE GREEN TECHNOLOGY PILOT PROGRAM

| | | |
|---|---|---|
| Attorney Docket Number: 242313-5 (GECZ 201073US) | Application Number (if known): 12/983,488 | Filing date: 01-03-2011 |

First Named Inventor: Natarajan VENKATAKRISHNAN

Title: LOW COST AND FLEXIBLE ENERGY MANAGEMENT SYSTEM DEFINED IN A SINGLE UNITARY HOUSING

**APPLICANT HEREBY REQUESTS TO PARTICIPATE IN THE GREEN TECHNOLOGY PILOT PROGRAM FOR THE ABOVE-IDENTIFIED APPLICATION. See Instruction Sheet on page 2.**

This petition must be timely filed electronically using the USPTO electronic filing system, EFS-Web.

1. By filing this petition:

   **Applicant is requesting early publication: Applicant hereby requests early publication under 37 CFR 1.219 and the publication fee set forth in 37 CFR 1.18(d) accompanies this request.**

2. By filing this petition: applicant is agreeing to make an election without traverse in a telephonic interview and elect an invention that meets the eligibility requirements for the Green Technology Pilot Program, if the Office determines that the claims are not obviously directed to a single invention. See Instruction Sheet.

3. This request is accompanied by statements of special status for the eligibility requirement.

4. The application contains no more than three (3) independent claims and twenty (20) total claims.

5. The application does not contain any multiple dependent claims.

6. Other attachments: Statement Concerning the Basis for the Special Status

| | |
|---|---|
| Signature /Allison W. Mages/ | Date |
| Name (Print/Typed) Allison W. Mages | Registration Number 57,275 |

***Note:*** *Signatures of all the inventors or assignees of record of the entire interest or their representative(s) are required in accordance with 37 CFR 1.33 and 11.18. Please see 37 CFR 1.4(d) for the form of the signature. If necessary, submit multiple forms for more than one signature, see below*.*

☐ *Total of _____ forms are submitted.

*If you need assistance in completing the form, call 1-800-PTO-9199 and select option 2.*

# Instruction Sheet for
# Petition to Make Special Under the Green Technology Pilot Program

(Not to be Submitted to the USPTO)

***The following is a summary of the requirements (for more information see the notices (i) "Pilot Program for Green Technologies Including Greenhouse Gas Reduction," (ii) "Elimination of Classification Requirement in the Green Technology Pilot Program," and (iii) "Expansion and Extension of the Green Technology Pilot Program," available on the USPTO web site at http://www.uspto.gov/patents/init_events/green_tech.jsp):***

(1) The application must be a non-reissue, non-provisional utility application filed under 35 U.S.C. 111(a), or an international application that has entered the national stage in compliance with 35 U.S.C. 371, irrespective of the filing date of the application. Reexamination proceedings are excluded from this pilot program.

(2) The application must contain three or fewer independent claims and twenty or fewer total claims. The application must not contain any multiple dependent claims. For an application that contains more than three independent claims or twenty total claims, or multiple dependent claims, applicant must file a preliminary amendment in compliance with 37 CFR 1.121 to cancel the excess claims and/or the multiple dependent claims at the time the petition to make special is filed.

(3) The claims must be directed to a single invention that materially enhances the quality of the environment, or that materially contributes to: (1) the discovery or development of renewable energy resources; (2) the more efficient utilization and conservation of energy resources; or (3) green house gas emission reduction (see the eligibility requirements of sections II and III of the notice (i) cited above). The petition must include a statement that, if the USPTO determines that the claims are directed to multiple inventions (e.g., in a restriction requirement), applicant will agree to make an election without traverse in a telephonic interview, and elect an invention that meets the eligibility requirements in section II or III of the notice (i) cited above.

(4) The petition to make special must be timely filed electronically using the USPTO electronic filing system, EFS-Web, and selecting the document description of "Petition for Green Tech Pilot" on the EFS-Web screen. Applicant should use form PTO/SB/420, which is available as a Portable Document Format (PDF) fillable form in EFS-Web and on the USPTO Web site.

(5) The petition to make special must be filed at least one day prior to the date that a first Office action (which may be an Office action containing only a restriction requirement) appears in the Patent Application Information Retrieval (PAIR) system. Applicant may check the status of the application using PAIR.

(6) The petition to make special must be accompanied by a request for early publication in compliance with 37 CFR 1.219 and the publication fee set forth in 37 CFR 1.18(d).

# Privacy Act Statement

The **Privacy Act of 1974 (P.L. 93-579)** requires that you be given certain information in connection with your submission of the attached form related to a patent application or patent. Accordingly, pursuant to the requirements of the Act, please be advised that: (1) the general authority for the collection of this information is 35 U.S.C. 2(b)(2); (2) furnishing of the information solicited is voluntary; and (3) the principal purpose for which the information is used by the U.S. Patent and Trademark Office is to process and/or examine your submission related to a patent application or patent. If you do not furnish the requested information, the U.S. Patent and Trademark Office may not be able to process and/or examine your submission, which may result in termination of proceedings or abandonment of the application or expiration of the patent.

The information provided by you in this form will be subject to the following routine uses:

1. The information on this form will be treated confidentially to the extent allowed under the Freedom of Information Act (5 U.S.C. 552) and the Privacy Act (5 U.S.C 552a). Records from this system of records may be disclosed to the Department of Justice to determine whether disclosure of these records is required by the Freedom of Information Act.
2. A record from this system of records may be disclosed, as a routine use, in the course of presenting evidence to a court, magistrate, or administrative tribunal, including disclosures to opposing counsel in the course of settlement negotiations.
3. A record in this system of records may be disclosed, as a routine use, to a Member of Congress submitting a request involving an individual, to whom the record pertains, when the individual has requested assistance from the Member with respect to the subject matter of the record.
4. A record in this system of records may be disclosed, as a routine use, to a contractor of the Agency having need for the information in order to perform a contract. Recipients of information shall be required to comply with the requirements of the Privacy Act of 1974, as amended, pursuant to 5 U.S.C. 552a(m).
5. A record related to an International Application filed under the Patent Cooperation Treaty in this system of records may be disclosed, as a routine use, to the International Bureau of the World Intellectual Property Organization, pursuant to the Patent Cooperation Treaty.
6. A record in this system of records may be disclosed, as a routine use, to another federal agency for purposes of National Security review (35 U.S.C. 181) and for review pursuant to the Atomic Energy Act (42 U.S.C. 218(c)).
7. A record from this system of records may be disclosed, as a routine use, to the Administrator, General Services, or his/her designee, during an inspection of records conducted by GSA as part of that agency's responsibility to recommend improvements in records management practices and programs, under authority of 44 U.S.C. 2904 and 2906. Such disclosure shall be made in accordance with the GSA regulations governing inspection of records for this purpose, and any other relevant (*i.e.*, GSA or Commerce) directive. Such disclosure shall not be used to make determinations about individuals.
8. A record from this system of records may be disclosed, as a routine use, to the public after either publication of the application pursuant to 35 U.S.C. 122(b) or issuance of a patent pursuant to 35 U.S.C. 151. Further, a record may be disclosed, subject to the limitations of 37 CFR 1.14, as a routine use, to the public if the record was filed in an application which became abandoned or in which the proceedings were terminated and which application is referenced by either a published application, an application open to public inspection or an issued patent.
9. A record from this system of records may be disclosed, as a routine use, to a Federal, State, or local law enforcement agency, if the USPTO becomes aware of a violation or potential violation of law or regulation.

UNITED STATES PATENT AND TRADEMARK OFFICE

UNITED STATES DEPARTMENT OF COMMERCE
United States Patent and Trademark Office
Address: COMMISSIONER FOR PATENTS
P.O. Box 1450
Alexandria, Virginia 22313-1450
www.uspto.gov

| APPLICATION NO. | FILING DATE | FIRST NAMED INVENTOR | ATTORNEY DOCKET NO. | CONFIRMATION NO. |
|---|---|---|---|---|
| 12/983,488 | 01/03/2011 | Natarajan Venkatakrishnan | GE 242313-5 GECZ 201073US | 1472 |

27885 7590 11/14/2011
FAY SHARPE LLP
1228 Euclid Avenue, 5th Floor
The Halle Building
Cleveland, OH 44115

| EXAMINER |
|---|

| ART UNIT | PAPER NUMBER |
|---|---|
| 2121 | |

| MAIL DATE | DELIVERY MODE |
|---|---|
| 11/14/2011 | PAPER |

**Please find below and/or attached an Office communication concerning this application or proceeding.**

The time period for reply, if any, is set in the attached communication.

UNITED STATES PATENT AND TRADEMARK OFFICE

Commissioner for Patents
United States Patent and Trademark Office
P.O. Box 1450
Alexandria, VA 22313-1450
www.uspto.gov

FAY SHARPE LLP
1228 Euclid Avenue, 5th Floor
The Halle Building
Cleveland OH 44115

In re Application of
VENKATAKRISHNAN, Natarajan et al.
Application No. 12/983,488
Filed: January 3, 2011
For: **LOW COST AND FLEXIBLE ENERGY MANAGEMENT SYSTEM DEFINED IN A SINGLE UNITARY HOUSING**

**DECISION ON PETITION TO MAKE SPECIAL UNDER THE GREEN TECHNOLOGY PILOT PROGRAM**

The petition filed October 29, 2011 has been treated as a petition under 37 CFR 1.102 to make the above-identified application special under the pilot program for applications pertaining to Green Technologies as set forth in 74 Federal Register Notice 64666 (December 8, 2009) and amended by 75 Federal Register Notice 28554 (May 21, 2010).

The petition is **DISMISSED**.

If reconsideration of this decision is desired, a petition for reconsideration must be filed within ONE (1) MONTH OR THIRTY (30) DAYS from the mail date of this decision, whichever is longer. No extension of this time limit can be granted under 37 CFR 1.136(a) or (b). The petition for reconsideration should include an exhaustive attempt to provide the lacking item(s) noted below, since, after a decision on the petition for reconsideration, no further reconsideration or review of the matter will be undertaken by the Director.

A grantable petition to make an application special under 37 CFR 1.102 and the pilot program as set forth in 74 FR 64666 must be directed to a nonprovisional application filed under 35 USC 111(a) or be a national stage entry under 35 USC 371, exclusive of any reissue applications and be filed prior to the date of the notice, December 8, 2009.

In order to qualify for special status, the following requirements must be met. 1) The application must have no more than 3 independent claims and no more than 20 total claims. 2) The application must not contain any multiple dependent claims. 3) The petition must state the basis for seeking special status, i.e., the claimed invention either: A) materially enhances the quality of the environment or B) materially contributes to: i) the discovery or development of renewable energy resources, ii) the more efficient utilization and conservation of energy resources, or iii) greenhouse gas emission reduction. 4) If the disclosure is not clear on its face that the claimed

invention materially contributes under category (A) or (B), the petition must be accompanied by a statement by the applicant, assignee, or an attorney/agent registered to practice before the Office explaining how the materiality standard is met. 5) A statement that applicant will agree to make an election without traverse in a telephonic interview if a restriction requirement is made by the examiner. 6) The petition to make special must be filed electronically. 7) The petition must be filed at least one day prior to the date that a first Office Action appears in the Patent Application Information Retrieval (PAIR) system. 8) The petition must be accompanied by a request for early publication in compliance with 37 CFR 1.219 and include the publication fee as set forth in 37 CFR 1.18(d).

The requirement for a fee for consideration of the petition to make special for applications pertaining to Green Technologies has been waived.

The petition lacks item(s) 4 above for the reasons explained in more detail below.

In the "Statement Concerning the Basis for the Special Status," petitioner states that "The following application relates to energy management, and more particularly to a premises energy management system for management of household consumer appliances, as well as other energy consuming devices and/or systems found in the home, at times called herein as accessories or network accessories. The present application is particularly useful for a device which controls operation of the accessories (e.g., consumer appliances, as well as other energy consuming devices and/or systems), and acts as a controller/gateway between a Utility company network and the consumer appliances, as well as other energy consuming devices and/or systems. The controller/gateway device to be discussed below is at times called herein a Home Energy Gateway (HEG). (See [0002])." However, these general statements fail to "explain[ ] how the materiality standard is met." Since the "disclosure is not clear on its face that the claimed invention contributes under category (A) or (B)," applicant is required to provide a more detail "[explanation] of how the materiality standard is met." This is because the claimed invention merely defines a "computing device with memory that stores energy information; a power supply; and prongs attached to the power supply in the same housing, the prongs configured to plug into a wall outlet." Nothing in the claims relate to the utilization of renewable energy resources, reduce greenhouse gas emission or contribute to more efficient utilization and conservation of energy resources. Furthermore, any request for reconsideration will be reviewed pursuant to Section II of the Pilot Program for Green Technologies as set forth in 74 Federal Register Notice 64666, which specifies that "materiality standard does not permit an applicant to speculate as to how a hypothetical end-user might specially apply the invention in a manner that could materially enhance the quality of the environment. Nor dies such standard permit an applicant to enjoy the benefit of advanced examination merely because some minor aspect of the claimed invention may enhance the quality of the environment."

Any reconsideration of this decision should be submitted through the USPTO electronic filing system, EFS-Web, and selecting the document description of "Petition for Green Tech Pilot" on the EFS-Web screen.

Any inquiry regarding this decision should be directed to Eddie C. Lee at (571) 272 - 1732.

/Eddie C. Lee/

Eddie C. Lee
Quality Assurance Specialist, TC 2100

**IN THE UNITED STATES PATENT AND TRADEMARK OFFICE**

| | |
|---|---|
| **First Named Inventor: Natarajan VENKATAKRISHNAN** | ) |
| **Confirmation No.: 1472** | ) |
| | ) |
| **Serial No.: 12/983,488** | ) |
| | ) |
| **Filing Date: 01-03-2011** | ) |
| | ) |
| **Atty Docket No.: 242313-5 (GECZ 201073US)** | ) |

Commissioner for Patents
P.O. Box 1450
Alexandria, VA 22313-1450

**Request for Reconsideration**

SIR:

This is responsive to the Decision on Petition, dated as mailed 14 November 2011, in the above-referenced application.

Applicant respectfully requests reconsideration of Applicant's Petition to Make Special on the basis that the present invention materially contributes to the more efficient utilization and conservation of energy resources.

The Decision to Make Special Under the Green Technology Pilot Program (hereinafter "the Decision") states that the petition fails to explain how the materiality standard is met and alleges that the disclosure is not clear on its face that the claimed invention contributes under category (A) or (B). The Decision alleges that the claimed invention merely defines a computing device with memory that stores energy information; a power supply; and prongs attached to the power supply in the same housing, the prongs configured to plug into a wall outlet. The Decision further alleges that nothing in the claims relate to the utilization of renewable energy resources, reduce greenhouse gas emission or

contribute to more efficient utilization and conservation of energy resources. Applicant does not agree with the comments made in the Decision.

Applicant respectfully submits that embodiments of the present invention relate to energy management, and more particularly to a premises energy management system for management of household consumer appliances, as well as other energy consuming devices and/or systems found in the home, at times called herein as accessories or network accessories. The present disclosure finds particular application to a device which controls operation of the accessories (e.g., consumer appliances, as well as other energy consuming devices and/or systems), and acts as a controller/gateway between a Utility company network and the consumer appliances, as well as other energy consuming devices and/or systems. The controller/gateway device to be discussed below is at times called herein a Home Energy Gateway (HEG). (see at least paragraph [0002]).

Smart technology generally relates to a class of technology that uses computer-based remote control and automation. These systems are made possible by two-way communication technology and computer processing and offer many benefits to utilities and consumers; mostly seen in big improvements in energy efficiency. Amongst several benefits, smart energy technologies allow for greater informational awareness and control of energy flow. This informational awareness allows consumers to interface with their energy consumption, providing new levels of detail on how, and how much, electricity is being consumed and at what cost in real time, and give them the tools to increase or

decrease their consumption. It also allows utilities to more efficiently manage and adjust electricity transmission, reducing the likelihood of outages and congestion while improving billing accuracy for consumers. Smart energy generally provides consumers and utilities a greater ability to adapt to changing market conditions for greater energy efficiency. ("Smart Grid", Office of Electricity Delivery & Energy Reliability. 2011. Web. 28 July 2011.)

Currently Utility companies commonly charge a flat rate for energy, but with the increasing cost of fuel prices and high energy usage during certain parts of the day, Utility companies have to buy more energy to supply consumers during peak demand. Consequently, Utility companies are beginning to charge higher rates during peak demand. If peak demand can be lowered, then a potential cost savings can be achieved and the peak load that the Utility company has to accommodate is lessened. (see at least paragraph [0003]). As a result, consumers are provided with an incentive to use electricity at off-peak times rather than on-peak times and to reduce overall energy consumption of power consuming device in a home network at all times

Home energy management (e.g., HEM) systems are being used to reduce energy consumption in homes and buildings, in a consumer friendly/compatible manner. The current existing types of HEMs have significant disadvantages due to high consumer cost, low flexibility and increased system complexity. (see at least paragraph [0006]-[0007]).

A device configured in a unitary housing which includes a computing device with memory that stores energy information is provided in the present

application. A power supply and prongs attach to the power supply in the same unitary housing, wherein the prongs are configured to plug into a wall outlet. (see at least paragraph [0012]).

A particular benefit of embodiments of the present invention, which uses the HEG without a dedicated or integrated display, is the ability to use a high quality display to view data and interact with appliances without having to pay for it separately, which allows consumers to better track energy consumption. This improved interface also allows the consumer to fine tune their response for different appliances with more detail than was possible over a typical appliance control screen. Such customization can be accomplished either in conjunction with energy prices, weather information, time of day, occupancy or other external parameter, or just as a user defined rule without any outside parameters. (see at least paragraphs [0066]-[0067]).

The embodiments disclosed herein provide for more efficient control of the operation of accessories in a home energy management system which manages a plurality of communication networks. Amongst several benefits, embodiments of the present invention allow for greater informational awareness and control of energy flow, which has been shown to encourage reductions in energy consumption, and results in greater energy efficiency on the part of consumers and utilities. As such, the present invention promotes the more efficient utilization of and conservation of energy.

The undersigned attorney may be contacted at the number below to facilitate the resolution of any matters. Please charge any fees that are incurred in connection with this Statement to deposit account no. 09-0470.

Respectfully submitted,

General Electric Company

By : /Allison W Mages/
Allison Weiner Mages
Reg. No. 57,275

Dated: November 22, 2011

GE Global Patent Operation
2 Corporate Drive, Suite 648
Shelton, CT 06484
203-944-6730

UNITED STATES PATENT AND TRADEMARK OFFICE

UNITED STATES DEPARTMENT OF COMMERCE
United States Patent and Trademark Office
Address: COMMISSIONER FOR PATENTS
P.O. Box 1450
Alexandria, Virginia 22313-1450
www.uspto.gov

| APPLICATION NO. | FILING DATE | FIRST NAMED INVENTOR | ATTORNEY DOCKET NO. | CONFIRMATION NO. |
|---|---|---|---|---|
| 12/983,488 | 01/03/2011 | Natarajan Venkatakrishnan | GE 242313-5 GECZ 201073US | 1472 |

27885 7590 12/05/2011
FAY SHARPE LLP
1228 Euclid Avenue, 5th Floor
The Halle Building
Cleveland, OH 44115

| EXAMINER |
|---|

| ART UNIT | PAPER NUMBER |
|---|---|
| 2121 | |

| MAIL DATE | DELIVERY MODE |
|---|---|
| 12/05/2011 | PAPER |

**Please find below and/or attached an Office communication concerning this application or proceeding.**

The time period for reply, if any, is set in the attached communication.

UNITED STATES PATENT AND TRADEMARK OFFICE

Commissioner for Patents
United States Patent and Trademark Office
P.O. Box 1450
Alexandria, VA 22313-1450
www.uspto.gov

FAY SHARPE LLP
1228 Euclid Avenue, 5th Floor
The Halle Building
Cleveland OH 44115

DEC 05 2011

| | | |
|---|---|---|
| In re Application of | : | |
| Venkatakrishnan et al. | : | DECISION ON PETITION |
| Application No. 12/983,488 | : | TO MAKE SPECIAL UNDER |
| Filed: 1/3/2011 | : | THE GREEN TECHNOLOGY |
| Attorney Docket No. **GE 242313-5 GECZ 201073US** | : | PILOT PROGRAM |

This is a decision on the request for reconsideration under 37 CFR 1.102, filed 11/22/2011, to make the above-identified application special under the pilot program for applications pertaining to Green Technologies as set forth in 74 Federal Register Notice 64666 (December 8, 2009) and amended by 75 Federal Register Notice 28554 (May 21, 2010) and 75 Federal Register Notice 69049 (November 10, 2010).

The petition is **GRANTED**.

A grantable petition to make an application special under 37 CFR 1.102 and the pilot program as set forth in 74 FR 64666 must be directed to a nonprovisional application filed under 35 USC 111(a) or be a national stage entry under 35 USC 371, exclusive of any reissue applications.

In order to qualify for special status, the following requirements must be met. 1) The application must have no more than 3 independent claims and no more than 20 total claims. 2) The application must not contain any multiple dependent claims. 3) The petition must state the basis for seeking special status, i.e., the claimed invention either: A) materially enhances the quality of the environment or B) materially contributes to: i) the discovery or development of renewable energy resources, ii) the more efficient utilization and conservation of energy resources, or iii) greenhouse gas emission reduction. 4) If the disclosure is not clear on its face that the claimed invention materially contributes under category (A) or (B), the petition must be accompanied by a statement by the applicant, assignee, or an attorney/agent registered to practice before the Office explaining how the materiality standard is met. 5) A statement that applicant will agree to make an election without traverse in a telephonic interview if a restriction requirement is made by the examiner. 6) The petition to make special must be filed electronically. 7) The petition must be filed at least one day prior to the date that a first Office Action appears in the Patent Application Information Retrieval (PAIR) system. 8) The petition must be accompanied by a

request for early publication in compliance with 37 CFR 1.219 and include the publication fee as set forth in 37 CFR 1.18(d).

The requirement for a fee for consideration of the petition to make special for applications pertaining to Green Technologies has been waived.

The instant petition complies with items 1 – 8 above. Accordingly, the above-identified application has been accorded "special" status.

Telephone inquires concerning this decision should be directed to Tom Dunn at 571-272-1171.

The application is being forwarded to the Technology Center Art Unit 2121 for action on the merits commensurate with this decision.

/Tom Dunn/

Tom Dunn
Quality Assurance Specialist
Technology Center 1700

**IN THE UNITED STATES PATENT AND TRADEMARK OFFICE**

| | |
|---|---|
| **First Named Inventor: Natarajan VENKATAKRISHNAN** | ) |
| **Confirmation No.: 1516** | ) |
| | ) |
| **Serial No.: 12/983,512** | ) |
| | ) |
| **Filing Date: 01-03-2011** | ) |
| | ) |
| **Atty Docket No.: 242313-6 (GECZ 201073US05)** | ) |

VIA EFS
Commissioner for Patents
P.O. Box 1450
Alexandria, VA 22313-1450

**Statement Concerning the Basis for the Special Status**

SIR:

The following disclosure relates to energy management, and more particularly to a premises energy management system for management of household consumer appliances, as well as other energy consuming devices and/or systems found in the home, at times called herein as accessories or network accessories. The present disclosure finds particular application to a device which controls operation of the accessories (e.g., consumer appliances, as well as other energy consuming devices and/or systems), and acts as a controller/gateway between a Utility company network and the consumer appliances, as well as other energy consuming devices and/or systems. The controller/gateway device to be discussed below is at times called herein a Home Energy Gateway (HEG). (See [0002]).

Currently Utility companies commonly charge a flat rate for energy, but with the increasing cost of fuel prices and high energy usage during certain parts

of the day, Utility companies have to buy more energy to supply consumers during peak demand. Consequently, Utility companies are beginning to charge higher rates during peak demand. If peak demand can be lowered, then a potential cost savings can be achieved and the peak load that the Utility company has to accommodate is lessened. (See [0003]).

Some electrical Utility companies are moving to an Advanced Metering Infrastructure (AMI) system which needs to communicate with appliances, HVAC, water heaters, etc., in a home or office building. All electrical Utility companies (more than 3,000 in the US) will not be using the same communication method and protocol to signal in the AMI system. Similarly, known systems do not communicate directly with the appliance using a variety of communication methods and protocols, nor is a modular and standard method created for communication devices to interface and to communicate selectable operational modes to the main controller of the appliance. (See [0005]).

Home energy management (e.g., HEM) systems are being used to reduce energy consumption in homes and buildings, in a consumer friendly/compatible manner. Existing HEMs are commonly placed in one of two general categories: In the first category, the HEM is in the form of a special custom configured computer with an integrated display, which communicates to devices in the home and stores data, and also has simple algorithms to enable energy reduction. In the second category, the HEM is in the form of a low cost router/gateway device in a home that collects information from devices within the home and sends it to

a remote server and in return receives control commands from the remote server and transmits it to energy consuming devices in the home. (See [0006]).

Both of the current existing types have significant disadvantages due to high consumer cost, low flexibility and increased system complexity. Further, these HEMs do not take into consideration that data bandwidth required to support a network of energy consuming devices is much smaller than the data bandwidth required for the networking of consumer electronics products, which is usually high bandwidth and high speed. The networking standards, including the physical layer, networking layer and application layers are therefore not optimized for the end use. (See [0010]).

Consumers want to be able to view and control energy consumption information through a variety of consumer electronic devices available in the home. To enable this it is required that energy consumption and control information must be easily transferrable from the networks of energy consuming devices to networks of consumer electronics devices. In addition, consumers are used to interacting with consumer electronics devices. So the consumer interaction data on a consumer electronics device should be able to flow into the network for energy consuming devices and to enable command and control of the energy consuming devices which has not been a consideration of existing systems. (See [0011]).

The present disclosure is intended to address these and other issues, by providing an energy data management control system configured to allow a user

to better control operation of the system among a plurality of modes. (See [0012]).

By way of example, in one embodiment, the system comprises a plurality of communication networks configured to transmit and receive data, at least some of the communication networks operating using communication protocols distinct from other ones of the communication networks. The system further comprises a home energy gateway configured as a single point of control that includes a plurality of interface channels to enable communication by the communication networks to the home energy gateway. One of the communication networks includes a user interface that allows a user to enter instructions that control operation of the system among a plurality of selectable modes. (See Claim 1).

Accordingly, Applicant respectfully submits that Special Status is sought on the basis that the embodiments disclosed in the present application materially contribute to the more efficient utilization and conservation of energy resources. Said embodiments provide consumers with an improved method for managing energy usage of one or more home appliances. Amongst several benefits, said embodiments allow for greater informational awareness and control of energy resources in conjunction with appliance operations, which has been shown to encourage reductions in energy consumption, and results in greater energy efficiency on the part of consumers and utilities.

The undersigned representative may be contacted at the number below to facilitate the resolution of any matters. Please charge any fees that are incurred in connection with this Statement to deposit account no. 09-0470.

Respectfully submitted,

General Electric Company

By : /Allison W. Mages/
Allison W. Mages
Reg. No. 57,275

Dated: February 1, 2012

GE Global Patent Operation
2 Corporate Drive, Suite 648
Shelton, CT 06484
203-944-6730

Doc Code: PET.GREEN
Document Description: Petition for Green Tech Pilot

PTO/SB/420 (03-11)

# PETITION TO MAKE SPECIAL UNDER THE GREEN TECHNOLOGY PILOT PROGRAM

| | | |
|---|---|---|
| Attorney Docket Number: 242313-6 (GECZ 201073US05) | Application Number (if known): 12/983,512 | Filing date: 01-03-2011 |

First Named Inventor: Natarajan VENKATAKRISHNAN

Title: LOW COST AND FLEXIBLE ENERGY MANAGEMENT SYSTEM AND METHOD FOR TRANSMITTING MESSAGES AMONG A PLURALITY OF COMMUNICATION NETWORKS

**APPLICANT HEREBY REQUESTS TO PARTICIPATE IN THE GREEN TECHNOLOGY PILOT PROGRAM FOR THE ABOVE-IDENTIFIED APPLICATION. See Instruction Sheet on page 2.**

This petition must be timely filed electronically using the USPTO electronic filing system, EFS-Web.

1. By filing this petition:

   **Applicant is requesting early publication: Applicant hereby requests early publication under 37 CFR 1.219 and the publication fee set forth in 37 CFR 1.18(d) accompanies this request.**

2. By filing this petition: applicant is agreeing to make an election without traverse in a telephonic interview and elect an invention that meets the eligibility requirements for the Green Technology Pilot Program, if the Office determines that the claims are not obviously directed to a single invention. See Instruction Sheet.

3. This request is accompanied by statements of special status for the eligibility requirement.

4. The application contains no more than three (3) independent claims and twenty (20) total claims.

5. The application does not contain any multiple dependent claims.

6. Other attachments: Statement Concerning the Basis for the Special Status

| | |
|---|---|
| Signature /Allison W. Mages/ | Date February 1, 2012 |
| Name (Print/Typed) Allison W. Mages | Registration Number 57,275 |

*Note: Signatures of all the inventors or assignees of record of the entire interest or their representative(s) are required in accordance with 37 CFR 1.33 and 11.18. Please see 37 CFR 1.4(d) for the form of the signature. If necessary, submit multiple forms for more than one signature, see below*.*

☐ *Total of _____ forms are submitted.

*If you need assistance in completing the form, call 1-800-PTO-9199 and select option 2.*

UNITED STATES PATENT AND TRADEMARK OFFICE

UNITED STATES DEPARTMENT OF COMMERCE
United States Patent and Trademark Office
Address: COMMISSIONER FOR PATENTS
P.O. Box 1450
Alexandria, Virginia 22313-1450
www.uspto.gov

| APPLICATION NO. | FILING DATE | FIRST NAMED INVENTOR | ATTORNEY DOCKET NO. | CONFIRMATION NO. |
|---|---|---|---|---|
| 12/983,512 | 01/03/2011 | Natarajan Venkatakrishnan | 242313-6 (GECZ 201073US05 | 1516 |

27885 7590 02/14/2012
FAY SHARPE LLP
1228 Euclid Avenue, 5th Floor
The Halle Building
Cleveland, OH 44115

| EXAMINER |
|---|
| DECADY, ALBERT |

| ART UNIT | PAPER NUMBER |
|---|---|
| 2121 | |

| MAIL DATE | DELIVERY MODE |
|---|---|
| 02/14/2012 | PAPER |

**Please find below and/or attached an Office communication concerning this application or proceeding.**

The time period for reply, if any, is set in the attached communication.

Best Available Copy

UNITED STATES PATENT AND TRADEMARK OFFICE

Commissioner for Patents
United States Patent and Trademark Office
P.O. Box 1450
Alexandria, VA 22313-1450
www.uspto.gov

FAY SHARPE LLP
1228 Euclid Avenue, 5th Floor
The Halle Building
Cleveland OH 44115

In re Application of
VENKATAKRISHNAN, Natarajan et al.
Application No. 12/983,512
Filed: January 3, 2011
For: **LOW COST AND FLEXIBLE ENERGY MANAGEMENT SYSTEM AND METHOD FOR TRANSMITTING MESSAGES AMONG A PLURALITY OF COMMUNICATION NETWORKS**

**DECISION ON PETITION TO MAKE SPECIAL UNDER THE GREEN TECHNOLOGY PILOT PROGRAM**

The petition filed February 1, 2012 has been treated as a petition under 37 CFR 1.102 to make the above-identified application special under the pilot program for applications pertaining to Green Technologies as set forth in 74 Federal Register Notice 64666 (December 8, 2009) and amended by 75 Federal Register Notice 28554 (May 21, 2010).

The petition is **GRANTED**.

A grantable petition to make an application special under 37 CFR 1.102 and the pilot program as set forth in 74 FR 64666 must be directed to a nonprovisional application filed under 35 USC 111(a) or be a national stage entry under 35 USC 371, exclusive of any reissue applications and be filed prior to the date of the notice, December 8, 2009.

In order to qualify for special status, the following requirements must be met. 1) The application must have no more than 3 independent claims and no more than 20 total claims. 2) The application must not contain any multiple dependent claims. 3) The petition must state the basis for seeking special status, i.e., the claimed invention either: A) materially enhances the quality of the environment or B) materially contributes to: i) the discovery or development of renewable energy resources, ii) the more efficient utilization and conservation of energy resources, or iii) greenhouse gas emission reduction. 4) If the disclosure is not clear on its face that the claimed invention materially contributes under category (A) or (B), the petition must be accompanied by a statement by the applicant, assignee, or an attorney/agent registered to practice before the Office explaining how the materiality standard is met. 5) A statement that applicant will agree to make an election without traverse in a telephonic interview if a restriction requirement is made

Best Available Copy



by the examiner. 6) The petition to make special must be filed electronically. 7) The petition must be filed at least one day prior to the date that a first Office Action appears in the Patent Application Information Retrieval (PAIR) system. 8) The petition must be accompanied by a request for early publication in compliance with 37 CFR 1.219 and include the publication fee as set forth in 37 CFR 1.18(d).

The requirement for a fee for consideration of the petition to make special for applications pertaining to Green Technologies has been waived.

The instant petition complies with items 1 – 8 above. Accordingly, the above-identified application has been accorded "special" status.

The application is being forwarded to the Technology Center Art Unit 2121 for action on the merits commensurate with this decision.

Any inquiry regarding this decision should be directed to Eddie C. Lee at (571) 272 - 1732.

/Eddie C. Lee/

Eddie C. Lee
Quality Assurance Specialist, TC 2100

**IN THE UNITED STATES PATENT AND TRADEMARK OFFICE**

| | |
|---|---|
| **First Named Inventor: Natarajan VENKATAKRISHNAN** | ) |
| **Confirmation No.: 1560** | ) |
| | ) |
| **Serial No.: 12/983,533** | ) |
| | ) |
| **Filing Date: 01-03-2011** | ) |
| | ) |
| **Atty Docket No.: 242313-7 (GECZ 201073US06)** | ) |

VIA EFS
Commissioner for Patents
P.O. Box 1450
Alexandria, VA 22313-1450

**Statement Concerning the Basis for the Special Status**

SIR:

The following application relates to energy management, and more particularly to a premises energy management system for management of household consumer appliances, as well as other energy consuming devices and/or systems found in the home, at times called herein as accessories or network accessories. The present application is particularly useful for a device which controls operation of the accessories (e.g., consumer appliances, as well as other energy consuming devices and/or systems), and acts as a controller/gateway between a Utility company network and the consumer appliances, as well as other energy consuming devices and/or systems. (See [0002])

Applicant respectfully submits that Special Status is sought on the basis that the present invention materially contributes to the more efficient utilization and conservation of energy resources.

The undersigned representative may be contacted at the number below to facilitate the resolution of any matters. Please charge any fees that are incurred in connection with this Statement to deposit account no. 09-0470.

Respectfully submitted,

General Electric Company

By : /Allison W. Mages/
Allison W. Mages
Reg. No. 57,275

Dated: October 11, 2011

GE Global Patent Operation
2 Corporate Drive, Suite 648
Shelton, CT 06484
203-944-6730

Doc Code: PET.GREEN
Document Description: Petition for Green Tech Pilot

PTO/SB/420 (03-11)

# PETITION TO MAKE SPECIAL UNDER THE GREEN TECHNOLOGY PILOT PROGRAM

| | | |
|---|---|---|
| Attorney Docket Number: 242313-7 (GECZ 201073US06) | Application Number (if known): 12/983,533 | Filing date: 01-03-2011 |

First Named Inventor: Natarajan VENKATAKRISHNAN

Title: LOW COST AND FLEXIBLE ENERGY MANAGEMENT SYSTEM CONFIGURED IN A UNITARY HOUSING HAVING A DISPLAYLESS CONFIGURATION

**APPLICANT HEREBY REQUESTS TO PARTICIPATE IN THE GREEN TECHNOLOGY PILOT PROGRAM FOR THE ABOVE-IDENTIFIED APPLICATION. See Instruction Sheet on page 2.**

This petition must be timely filed electronically using the USPTO electronic filing system, EFS-Web.

1. By filing this petition:

   **Applicant is requesting early publication: Applicant hereby requests early publication under 37 CFR 1.219 and the publication fee set forth in 37 CFR 1.18(d) accompanies this request.**

2. By filing this petition: applicant is agreeing to make an election without traverse in a telephonic interview and elect an invention that meets the eligibility requirements for the Green Technology Pilot Program, if the Office determines that the claims are not obviously directed to a single invention. See Instruction Sheet.

3. This request is accompanied by statements of special status for the eligibility requirement.

4. The application contains no more than three (3) independent claims and twenty (20) total claims.

5. The application does not contain any multiple dependent claims.

6. Other attachments: Statement Concerning the Basis for the Special Status

| | |
|---|---|
| Signature /Allison W. Mages/ | Date |
| Name (Print/Typed) Allison W. Mages | Registration Number 57,275 |

*Note: Signatures of all the inventors or assignees of record of the entire interest or their representative(s) are required in accordance with 37 CFR 1.33 and 11.18. Please see 37 CFR 1.4(d) for the form of the signature. If necessary, submit multiple forms for more than one signature, see below*.*

☐ *Total of _____ forms are submitted.

*If you need assistance in completing the form, call 1-800-PTO-9199 and select option 2.*

# Instruction Sheet for
# Petition to Make Special Under the Green Technology Pilot Program

(Not to be Submitted to the USPTO)

***The following is a summary of the requirements (for more information see the notices (i) "Pilot Program for Green Technologies Including Greenhouse Gas Reduction," (ii) "Elimination of Classification Requirement in the Green Technology Pilot Program," and (iii) "Expansion and Extension of the Green Technology Pilot Program," available on the USPTO web site at http://www.uspto.gov/patents/init_events/green_tech.jsp):***

(1) The application must be a non-reissue, non-provisional utility application filed under 35 U.S.C. 111(a), or an international application that has entered the national stage in compliance with 35 U.S.C. 371, irrespective of the filing date of the application. Reexamination proceedings are excluded from this pilot program.

(2) The application must contain three or fewer independent claims and twenty or fewer total claims. The application must not contain any multiple dependent claims. For an application that contains more than three independent claims or twenty total claims, or multiple dependent claims, applicant must file a preliminary amendment in compliance with 37 CFR 1.121 to cancel the excess claims and/or the multiple dependent claims at the time the petition to make special is filed.

(3) The claims must be directed to a single invention that materially enhances the quality of the environment, or that materially contributes to: (1) the discovery or development of renewable energy resources; (2) the more efficient utilization and conservation of energy resources; or (3) green house gas emission reduction (see the eligibility requirements of sections II and III of the notice (i) cited above). The petition must include a statement that, if the USPTO determines that the claims are directed to multiple inventions (e.g., in a restriction requirement), applicant will agree to make an election without traverse in a telephonic interview, and elect an invention that meets the eligibility requirements in section II or III of the notice (i) cited above.

(4) The petition to make special must be timely filed electronically using the USPTO electronic filing system, EFS-Web, and selecting the document description of "Petition for Green Tech Pilot" on the EFS-Web screen. Applicant should use form PTO/SB/420, which is available as a Portable Document Format (PDF) fillable form in EFS-Web and on the USPTO Web site.

(5) The petition to make special must be filed at least one day prior to the date that a first Office action (which may be an Office action containing only a restriction requirement) appears in the Patent Application Information Retrieval (PAIR) system. Applicant may check the status of the application using PAIR.

(6) The petition to make special must be accompanied by a request for early publication in compliance with 37 CFR 1.219 and the publication fee set forth in 37 CFR 1.18(d).

# Privacy Act Statement

The **Privacy Act of 1974 (P.L. 93-579)** requires that you be given certain information in connection with your submission of the attached form related to a patent application or patent. Accordingly, pursuant to the requirements of the Act, please be advised that: (1) the general authority for the collection of this information is 35 U.S.C. 2(b)(2); (2) furnishing of the information solicited is voluntary; and (3) the principal purpose for which the information is used by the U.S. Patent and Trademark Office is to process and/or examine your submission related to a patent application or patent. If you do not furnish the requested information, the U.S. Patent and Trademark Office may not be able to process and/or examine your submission, which may result in termination of proceedings or abandonment of the application or expiration of the patent.

The information provided by you in this form will be subject to the following routine uses:

1. The information on this form will be treated confidentially to the extent allowed under the Freedom of Information Act (5 U.S.C. 552) and the Privacy Act (5 U.S.C 552a). Records from this system of records may be disclosed to the Department of Justice to determine whether disclosure of these records is required by the Freedom of Information Act.
2. A record from this system of records may be disclosed, as a routine use, in the course of presenting evidence to a court, magistrate, or administrative tribunal, including disclosures to opposing counsel in the course of settlement negotiations.
3. A record in this system of records may be disclosed, as a routine use, to a Member of Congress submitting a request involving an individual, to whom the record pertains, when the individual has requested assistance from the Member with respect to the subject matter of the record.
4. A record in this system of records may be disclosed, as a routine use, to a contractor of the Agency having need for the information in order to perform a contract. Recipients of information shall be required to comply with the requirements of the Privacy Act of 1974, as amended, pursuant to 5 U.S.C. 552a(m).
5. A record related to an International Application filed under the Patent Cooperation Treaty in this system of records may be disclosed, as a routine use, to the International Bureau of the World Intellectual Property Organization, pursuant to the Patent Cooperation Treaty.
6. A record in this system of records may be disclosed, as a routine use, to another federal agency for purposes of National Security review (35 U.S.C. 181) and for review pursuant to the Atomic Energy Act (42 U.S.C. 218(c)).
7. A record from this system of records may be disclosed, as a routine use, to the Administrator, General Services, or his/her designee, during an inspection of records conducted by GSA as part of that agency's responsibility to recommend improvements in records management practices and programs, under authority of 44 U.S.C. 2904 and 2906. Such disclosure shall be made in accordance with the GSA regulations governing inspection of records for this purpose, and any other relevant (*i.e.*, GSA or Commerce) directive. Such disclosure shall not be used to make determinations about individuals.
8. A record from this system of records may be disclosed, as a routine use, to the public after either publication of the application pursuant to 35 U.S.C. 122(b) or issuance of a patent pursuant to 35 U.S.C. 151. Further, a record may be disclosed, subject to the limitations of 37 CFR 1.14, as a routine use, to the public if the record was filed in an application which became abandoned or in which the proceedings were terminated and which application is referenced by either a published application, an application open to public inspection or an issued patent.
9. A record from this system of records may be disclosed, as a routine use, to a Federal, State, or local law enforcement agency, if the USPTO becomes aware of a violation or potential violation of law or regulation.

UNITED STATES PATENT AND TRADEMARK OFFICE

UNITED STATES DEPARTMENT OF COMMERCE
United States Patent and Trademark Office
Address: COMMISSIONER FOR PATENTS
P.O. Box 1450
Alexandria, Virginia 22313-1450
www.uspto.gov

| APPLICATION NO. | FILING DATE | FIRST NAMED INVENTOR | ATTORNEY DOCKET NO. | CONFIRMATION NO. |
|---|---|---|---|---|
| 12/983,533 | 01/03/2011 | Natarajan Venkatakrishnan | 242313-7 (GECZ 201073US06 | 1560 |

27885 7590 10/27/2011
FAY SHARPE LLP
1228 Euclid Avenue, 5th Floor
The Halle Building
Cleveland, OH 44115

| EXAMINER |
|---|

| ART UNIT | PAPER NUMBER |
|---|---|
| 2115 | |

| MAIL DATE | DELIVERY MODE |
|---|---|
| 10/27/2011 | PAPER |

**Please find below and/or attached an Office communication concerning this application or proceeding.**

The time period for reply, if any, is set in the attached communication.

UNITED STATES PATENT AND TRADEMARK OFFICE

Commissioner for Patents
United States Patent and Trademark Office
P.O. Box 1450
Alexandria, VA 22313-1450
www.uspto.gov

FAY SHARPE LLP
1228 Euclid Avenue, 5th Floor
The Halle Building
Cleveland OH 44115

In re Application of
VENKATAKRISHNAN, Natarajan et al.
Application No. 12/983,533
Filed: January 3, 2011
For: **LOW COST AND FLEXIBLE ENERGY MANAGEMENT SYSTEM CONFIGURED IN A UNITARY HOUSING HAVING A DISPLAYLESS CONFIGURATION**

**DECISION ON PETITION TO MAKE SPECIAL UNDER THE GREEN TECHNOLOGY PILOT PROGRAM**

The petition filed October 11, 2011 has been treated as a petition under 37 CFR 1.102 to make the above-identified application special under the pilot program for applications pertaining to Green Technologies as set forth in 74 Federal Register Notice 64666 (December 8, 2009) and amended by 75 Federal Register Notice 28554 (May 21, 2010).

The petition is **DISMISSED**.

If reconsideration of this decision is desired, a petition for reconsideration must be filed within ONE (1) MONTH OR THIRTY (30) DAYS from the mail date of this decision, whichever is longer. No extension of this time limit can be granted under 37 CFR 1.136(a) or (b). The petition for reconsideration should include an exhaustive attempt to provide the lacking item(s) noted below, since, after a decision on the petition for reconsideration, no further reconsideration or review of the matter will be undertaken by the Director.

A grantable petition to make an application special under 37 CFR 1.102 and the pilot program as set forth in 74 FR 64666 must be directed to a nonprovisional application filed under 35 USC 111(a) or be a national stage entry under 35 USC 371, exclusive of any reissue applications and be filed prior to the date of the notice, December 8, 2009.

In order to qualify for special status, the following requirements must be met. 1) The application must have no more than 3 independent claims and no more than 20 total claims. 2) The application must not contain any multiple dependent claims. 3) The petition must state the basis for seeking special status, i.e., the claimed invention either: A) materially enhances the quality of the environment or B) materially contributes to: i) the discovery or development of renewable energy resources, ii) the more efficient utilization and conservation of energy resources, or iii)

greenhouse gas emission reduction. 4) If the disclosure is not clear on its face that the claimed invention materially contributes under category (A) or (B), the petition must be accompanied by a statement by the applicant, assignee, or an attorney/agent registered to practice before the Office explaining how the materiality standard is met. 5) A statement that applicant will agree to make an election without traverse in a telephonic interview if a restriction requirement is made by the examiner. 6) The petition to make special must be filed electronically. 7) The petition must be filed at least one day prior to the date that a first Office Action appears in the Patent Application Information Retrieval (PAIR) system. 8) The petition must be accompanied by a request for early publication in compliance with 37 CFR 1.219 and include the publication fee as set forth in 37 CFR 1.18(d).

The requirement for a fee for consideration of the petition to make special for applications pertaining to Green Technologies has been waived.

The petition lacks item(s) 4 above for the reasons explained in more detail below.

In the "Statement Concerning the Basis for the Special Status," petitioner states that "the following application relates to energy management, and more particularly to a premises energy management system for management of household consumer appliances as well as other energy consuming devices and/or systems found in the home, at times called herein as accessories or network accessories. The present application is particularly useful for a device which controls operation of the accessories (e.g., consumer appliances, as well as other energy consuming devise and/or systems), and acts as a controller/gateway between a Utility company network and the consumer appliances, as well as other energy consuming devices and/or systems. (See [0002])." However, these general statements fail to "explain[ ] how the materiality standard is met." Since the "disclosure is not clear on its face that the claimed invention contributes under category (A) or (B)," applicant is required to provide a more detail "[explanation] of how the materiality standard is met." This is because the claimed invention merely defines a "status indicators" "disposed on the external surface of said housing for conveying the status of the device." Nothing in the claims relate to the utilization of renewable energy resources, reduce greenhouse gas emission or contribute to more efficient utilization and conservation of energy resources. Furthermore, any request for reconsideration will be reviewed pursuant to Section II of the Pilot Program for Green Technologies as set forth in 74 Federal Register Notice 64666, which specifies that "materiality standard does not permit an applicant to speculate as to how a hypothetical end-user might specially apply the invention in a manner that could materially enhance the quality of the environment. Nor dies such standard permit an applicant to enjoy the benefit of advanced examination merely because some minor aspect of the claimed invention may enhance the quality of the environment."

Any reconsideration of this decision should be submitted through the USPTO electronic filing system, EFS-Web, and selecting the document description of "Petition for Green Tech Pilot" on the EFS-Web screen.

Any inquiry regarding this decision should be directed to Eddie C. Lee at (571) 272 - 1732.

/Eddie C. Lee/

Eddie C. Lee
Quality Assurance Specialist, TC 2100

**IN THE UNITED STATES PATENT AND TRADEMARK OFFICE**

| | |
|---|---|
| **First Named Inventor: Natarajan VENKATAKRISHNAN** | ) |
| **Confirmation No.: 1560** | ) |
| | ) |
| **Serial No.: 12/983,533** | ) |
| | ) |
| **Filing Date: 01-03-2011** | ) |
| | ) |
| **Atty Docket No.: 242313-7 (GECZ 201073US06)** | ) |

Commissioner for Patents
P.O. Box 1450
Alexandria, VA 22313-1450

**Request for Reconsideration**

SIR:

This is responsive to the Decision on Petition, dated as mailed 27 October 2011, in the above-referenced application.

Applicant respectfully requests reconsideration of Applicant's Petition to Make Special on the basis that the present invention materially contributes to the more efficient utilization and conservation of energy resources.

The Decision to Make Special Under the Green Technology Pilot Program (hereinafter "the Decision") states that the petition fails to explain how the materiality standard is met and alleges that the disclosure is not clear on its face that the claimed invention contributes under category (A) or (B). The Decision alleges that the claimed invention merely defines a status indicator disposed on the external surface of said housing for conveying the status of the device. The Decision further alleges that nothing in the claims relate to the utilization of renewable energy resources, reduce greenhouse gas emission or contribute to

more efficient utilization and conservation of energy resources. Applicant does not agree with the comments made in the Decision.

Applicant respectfully submits that embodiments of the present invention relate to energy management, and more particularly to a premises energy management system for management of household consumer appliances, as well as other energy consuming devices and/or systems found in the home, at times called herein as accessories or network accessories. The present disclosure finds particular application to a device which controls operation of the accessories (e.g., consumer appliances, as well as other energy consuming devices and/or systems), and acts as a controller/gateway between a Utility company network and the consumer appliances, as well as other energy consuming devices and/or systems. The controller/gateway device to be discussed below is at times called herein a Home Energy Gateway (HEG). (see at least paragraph [0002]).

Smart technology generally relates to a class of technology that uses computer-based remote control and automation. These systems are made possible by two-way communication technology and computer processing and offer many benefits to utilities and consumers; mostly seen in big improvements in energy efficiency. Amongst several benefits, smart energy technologies allow for greater informational awareness and control of energy flow. This informational awareness allows consumers to interface with their energy consumption, providing new levels of detail on how, and how much, electricity is being consumed and at what cost in real time, and give them the tools to increase or

decrease their consumption. It also allows utilities to more efficiently manage and adjust electricity transmission, reducing the likelihood of outages and congestion while improving billing accuracy for consumers. Smart energy generally provides consumers and utilities a greater ability to adapt to changing market conditions for greater energy efficiency.

Currently Utility companies commonly charge a flat rate for energy, but with the increasing cost of fuel prices and high energy usage during certain parts of the day, Utility companies have to buy more energy to supply consumers during peak demand. Consequently, Utility companies are beginning to charge higher rates during peak demand. If peak demand can be lowered, then a potential cost savings can be achieved and the peak load that the Utility company has to accommodate is lessened. (see at least paragraph [0005]). As a result, consumers are provided with an incentive to use electricity at off-peak times rather than on-peak times and to reduce overall energy consumption of power consuming device in a home network at all times

Home energy management (e.g., HEM) systems are being used to reduce energy consumption in homes and buildings, in a consumer friendly/compatible manner. The current existing types of HEMs have significant disadvantages due to high consumer cost, low flexibility and increased system complexity. (see at least paragraph [0006]).

A method and system for controlling the operation of accessories in a home energy management system which manages a plurality of communication networks is provided. Schedule for operation of one or more of the accessories

are generated by using a central controller and interacting with a user interface found on a device separate from the central controller. (see at least paragraph [0013]).

A particular benefit of embodiments of the present invention, which uses the HEG without a dedicated or integrated display, is the ability to use a high quality display to view data and interact with appliances without having to pay for it separately, which allows consumers to better track energy consumption. This improved interface also allows the consumer to fine tune their response for different appliances with more detail than was possible over a typical appliance control screen. Such customization can be accomplished either in conjunction with energy prices, weather information, time of day, occupancy or other external parameter, or just as a user defined rule without any outside parameters. (see at least paragraphs [0067]-[0068]).

The embodiments disclosed herein provide for more efficient control of the operation of accessories in a home energy management system which manages a plurality of communication networks. Amongst several benefits, embodiments of the present invention allow for greater informational awareness and control of energy flow, which has been shown to encourage reductions in energy consumption, and results in greater energy efficiency on the part of consumers and utilities. As such, the present invention promotes the more efficient utilization of and conservation of energy.

The undersigned attorney may be contacted at the number below to facilitate the resolution of any matters. Please charge any fees that are incurred in connection with this Statement to deposit account no. 09-0470.

Respectfully submitted,

General Electric Company

By : /Allison W Mages/
Allison Weiner Mages
Reg. No. 57,275

Dated: November 23, 2011

GE Global Patent Operation
2 Corporate Drive, Suite 648
Shelton, CT 06484
203-944-6730

# UNITED STATES PATENT AND TRADEMARK OFFICE

UNITED STATES DEPARTMENT OF COMMERCE
United States Patent and Trademark Office
Address: COMMISSIONER FOR PATENTS
P.O. Box 1450
Alexandria, Virginia 22313-1450
www.uspto.gov

| APPLICATION NO. | FILING DATE | FIRST NAMED INVENTOR | ATTORNEY DOCKET NO. | CONFIRMATION NO. |
|---|---|---|---|---|
| 12/983,533 | 01/03/2011 | Natarajan Venkatakrishnan | 242313-7 (GECZ 201073US06 | 1560 |

27885 7590 12/09/2011
FAY SHARPE LLP
1228 Euclid Avenue, 5th Floor
The Halle Building
Cleveland, OH 44115

| EXAMINER |
|---|

| ART UNIT | PAPER NUMBER |
|---|---|
| 2115 | |

| MAIL DATE | DELIVERY MODE |
|---|---|
| 12/09/2011 | PAPER |

**Please find below and/or attached an Office communication concerning this application or proceeding.**

The time period for reply, if any, is set in the attached communication.

UNITED STATES PATENT AND TRADEMARK OFFICE

Commissioner for Patents
United States Patent and Trademark Office
P.O. Box 1450
Alexandria, VA 22313-1450
www.uspto.gov

12/09/11

FAY SHARPE LLP
1228 Euclid Avenue, 5th Floor
The Halle Building
Cleveland OH 44115

| | | |
|---|---|---|
| In re Application of | : | |
| Natarajan Venkatakrishnan et al. | : | DECISION ON PETITION |
| Application No. 12/983,533 | : | TO MAKE SPECIAL UNDER |
| Filed: January 03, 2011 | : | THE GREEN TECHNOLOGY |
| Attorney Docket No. 242313-7 (GECZ 201073US06 | : | PILOT PROGRAM |

This is a decision on the petition under 37 CFR 1.102, filed November 23, 2011, to make the above-identified application special under the pilot program for applications pertaining to Green Technologies as set forth in 74 Federal Register Notice 64666 (December 8, 2009) and amended by 75 Federal Register Notice 28554 (May 21, 2010) and 75 Federal Register Notice 69049 (November 10, 2010).

The petition is **GRANTED**.

A grantable petition to make an application special under 37 CFR 1.102 and the pilot program as set forth in 74 FR 64666 must be directed to a nonprovisional application filed under 35 USC 111(a) or be a national stage entry under 35 USC 371, exclusive of any reissue applications.

In order to qualify for special status, the following requirements must be met. 1) The application must have no more than 3 independent claims and no more than 20 total claims. 2) The application must not contain any multiple dependent claims. 3) The petition must state the basis for seeking special status, i.e., the claimed invention either: A) materially enhances the quality of the environment or B) materially contributes to: i) the discovery or development of renewable energy resources, ii) the more efficient utilization and conservation of energy resources, or iii) greenhouse gas emission reduction. 4) If the disclosure is not clear on its face that the claimed invention materially contributes under category (A) or (B), the petition must be accompanied by a statement by the applicant, assignee, or an attorney/agent registered to practice before the Office explaining how the materiality standard is met. 5) A statement that applicant will agree to make an election without traverse in a telephonic interview if a restriction requirement is made by the examiner. 6) The petition to make special must be filed electronically. 7) The petition must be filed at least one day prior to the date that a first Office Action appears in the Patent Application Information Retrieval (PAIR) system. 8) The petition must be accompanied by a request for early publication in compliance with 37 CFR 1.219 and include the publication fee as set forth in 37 CFR 1.18(d).

The requirement for a fee for consideration of the petition to make special for applications pertaining to Green Technologies has been waived.

The instant petition complies with items 1 – 8 above. Accordingly, the above-identified application has been accorded "special" status.

Telephone inquires concerning this decision should be directed to Blaine Copenheaver at 571-272-1156.

The application is being forwarded to the examiner for action on the merits commensurate with this decision.

/Blaine Copenheaver/

Blaine Copenheaver
Quality Assurance Specialist
Technology Center 1700

UNITED STATES PATENT AND TRADEMARK OFFICE

UNITED STATES DEPARTMENT OF COMMERCE
United States Patent and Trademark Office
Address: COMMISSIONER FOR PATENTS
P.O. Box 1450
Alexandria, Virginia 22313-1450
www.uspto.gov

| APPLICATION NO. | FILING DATE | FIRST NAMED INVENTOR | ATTORNEY DOCKET NO. | CONFIRMATION NO. |
|---|---|---|---|---|
| 12/983,559 | 01/03/2011 | Seiichiro KIMOTO | 27143 | 1620 |

23389 7590 07/26/2011
SCULLY SCOTT MURPHY & PRESSER, PC
400 GARDEN CITY PLAZA
SUITE 300
GARDEN CITY, NY 11530

| EXAMINER | |
|---|---|
| ART UNIT | PAPER NUMBER |
| 3739 | |

| MAIL DATE | DELIVERY MODE |
|---|---|
| 07/26/2011 | PAPER |

**Please find below and/or attached an Office communication concerning this application or proceeding.**

The time period for reply, if any, is set in the attached communication.

UNITED STATES PATENT AND TRADEMARK OFFICE

Commissioner for Patents
United States Patent and Trademark Office
P.O. Box 1450
Alexandria, VA 22313-1450
www.uspto.gov

SCULLY SCOTT MURPHY & PRESSER, PC
400 GARDEN CITY PLAZA
SUITE 300
GARDEN CITY NY 11530

| | |
|---|---|
| *In re* Application of:<br>KIMOTO, SEIICHIRO<br>Serial No.: 12/983559<br>Filed: 01/03/2011<br>Attorney Docket No. : 27143<br>Title: BODY-INSERTABLE APPARATUS AND IN-VIVO INFORMATION ACQUISITION SYSTEM | DECISION ON A REQUEST TO PARTICIPATE IN PATENT PCT/PROSECUTION HIGHWAY PROGRAM AND PETITION TO MAKE SPECIAL UNDER CFR 1.102(a) |

This is a decision on the request to participate in the Patent Prosecution Highway (PPH) program and the petition under 37 CFR 1.102(a), filed June 6, 2011 to make the above-identified application special.

The request and petition are **granted**.

A grantable request to participate in the PPH pilot program and petition to make special require:

(1) The U.S. application must validly claim priority under 35 U.S.C. 119(a) to one or more applications filed in the JPO;
(2) Applicant must submit a copy of the allowable/patentable claim(s) from the JPO application(s);
(3) All the claims in the U.S. application must sufficiently correspond or be amended to sufficiently correspond to the allowable/patentable claim(s) in the JPO application(s);
(4) Examination of the U.S. application has not begun;
(5) Applicant must submit a copy of all the office actions from each of the JPO application(s) containing the allowable/patentable claim(s) along with an English translation thereof and a statement that the English translation is accurate; and
(6) Applicant must submit an IDS listing the documents cited by the JPO examiner in the JPO office action along with copies of documents except U.S. patents or U.S. patent application publications.

In light of the petition being properly submitted, the request to participate in the PPH program and the petition comply with the above requirements. Accordingly, the above-identified application has been accorded "special" status.

The applicant is encouraged to cite and submit all relevant prior art references, if any, to facilitate examination in this application.

Response must be filed via EFS-Web. Telephone inquiries concerning this decision should be directed to Henry C. Yuen, at 571-272-4856.

Petition is **granted**.

/Henry C. Yuen/

Henry C. Yuen
Special Programs Examiner
Technology Center 3700
Tel: 571-272-4856

**IN THE UNITED STATES PATENT AND TRADEMARK OFFICE**

| | |
|---|---|
| **First Named Inventor: Jeff Donald DRAKE** | ) |
| **Confirmation No.: 1861** | ) |
| | ) |
| **Serial No.: 12/983,686** | ) |
| | ) |
| **Filing Date: 01-03-2011** | ) |
| | ) |
| **Atty Docket No.: 245424-1 (GECZ 201146US01)** | ) |

VIA EFS
Commissioner for Patents
P.O. Box 1450
Alexandria, VA 22313-1450

**Statement Concerning the Basis for the Special Status**

SIR:

The following application relates to energy management, and more particularly to a premise energy management system for management of household appliances, as well as other energy consuming devices and systems generally found in the home. The application is particularly useful for changing existing appliances via add-on features or modules and incorporating an override capability in response to a demand signal sent by a utility company. (See [0001])

The increasing cost of fuel prices and high energy usage rates at certain parts of the day have prompted utilities to charge higher rates during periods of peak demand. If peak demand can be lowered, then a homeowner or consumer can achieve a potential cost savings and the peak load that the utility company has to accommodate is reduced. This phenomenon coupled with cost efficient communication technology has brought about attempts to mitigate energy usage and to lower energy costs. (See [0002])

Home energy management (HEM) systems are being used to reduce energy consumption in homes and buildings. This development has prompted some electrical companies to implement or plan on implementing a system to communicate a demand signal to a home energy management system, and more particularly to a home energy consuming system, to activate a change in operation of the appliance or system that limits energy consumption being consumed by the system or appliance. This demand signal and resultant operational change in the appliance or system would certainly reduce the amount of energy consumption. However, if the operational change is automatically instituted in response to the demand signal, homeowners are prevented from having the option to control certain home energy consumption systems in a manner that is tailored to the specific energy usage needs of the individual consumer. Therefore, there is a need to provide an individual the option to automatically opt in or opt out of demand response events, e.g., peak pricing periods, when an associated utility sends a demand signal to a home energy management system that otherwise alters use or operation of an appliance or device within the home. (See [0005])

The present application relates to a home energy management system for receiving data indicative of a current demand state of an associated utility supplying energy. The energy management system comprising at least one home energy consuming system and a controller being configured and arranged to communicate with the at least one home energy consuming system, the controller is capable of automatically responding to the demand signal by

adopting an opt-in or an opt-out status whereby the home energy consuming system operates in compliance or in noncompliance with the demand signal. (See [0006])

In one embodiment, a method is provided for automatically managing energy provided by a utility to a home environment that has an energy consuming system, device or appliance operatively associated with an energy management system that includes a controller and a user interface. The method includes receiving a demand signal from the utility and the energy management system automatically adopting an opt-in or an opt-out status in response to the demand signal whereby the home energy consuming system operates in compliance or in non-compliance with the demand signal. (See [0010])

[0011] An advantage of the present application is a system that gives a user the ability to set up the appliances or devices to respond automatically to a demand signal provided by a utility or a third party company. Another advantage of the present application relates to a system that gives the user the ability to set up their home to react to energy events (e.g., peak pricing periods) from utilities or third parties automatically in whatever preference the homeowner chooses. A further advantage of the present application is associated with the ability of a user to update settings on individual devices or use a home energy management system to update settings that will automatically opt-in or opt-out of demand response events depending on the settings the user inputs. (See [0011]-[0013])

Therefore, Applicant respectfully submits that Special Status is sought on the basis that the present invention materially contributes to the more efficient utilization and conservation of energy resources.

The undersigned representative may be contacted at the number below to facilitate the resolution of any matters. Please charge any fees that are incurred in connection with this Statement to deposit account no. 09-0470.

Respectfully submitted,

General Electric Company

By : /Allison W. Mages/
Allison W. Mages
Reg. No. 57,275

Dated: November 15, 2011

GE Global Patent Operation
2 Corporate Drive, Suite 648
Shelton, CT 06484
203-944-6730

Doc Code: PET.GREEN
Document Description: Petition for Green Tech Pilot

PTO/SB/420 (03-11)

# PETITION TO MAKE SPECIAL UNDER THE GREEN TECHNOLOGY PILOT PROGRAM

| | | |
|---|---|---|
| Attorney Docket Number: 245424-1 (GECZ 201146US01) | Application Number (if known): 12/983,686 | Filing date: 01-03-2011 |

First Named Inventor: Jeff Donald DRAKE

Title: SMART ENERGY DEVICE REPORTING "OPT-OUT" AUTONOMOUSLY DEPENDING ON USER SETTINGS

**APPLICANT HEREBY REQUESTS TO PARTICIPATE IN THE GREEN TECHNOLOGY PILOT PROGRAM FOR THE ABOVE-IDENTIFIED APPLICATION. See Instruction Sheet on page 2.**

This petition must be timely filed electronically using the USPTO electronic filing system, EFS-Web.

1. By filing this petition:

   **Applicant is requesting early publication: Applicant hereby requests early publication under 37 CFR 1.219 and the publication fee set forth in 37 CFR 1.18(d) accompanies this request.**

2. By filing this petition: applicant is agreeing to make an election without traverse in a telephonic interview and elect an invention that meets the eligibility requirements for the Green Technology Pilot Program, if the Office determines that the claims are not obviously directed to a single invention. See Instruction Sheet.

3. This request is accompanied by statements of special status for the eligibility requirement.

4. The application contains no more than three (3) independent claims and twenty (20) total claims.

5. The application does not contain any multiple dependent claims.

6. Other attachments: Statement Concerning the Basis for the Special Status

| | |
|---|---|
| Signature /Allison W. Mages/ | Date November 15, 2011 |
| Name (Print/Typed) Allison W. Mages | Registration Number 57,275 |

*Note: Signatures of all the inventors or assignees of record of the entire interest or their representative(s) are required in accordance with 37 CFR 1.33 and 11.18. Please see 37 CFR 1.4(d) for the form of the signature. If necessary, submit multiple forms for more than one signature, see below*.*

☐ *Total of _____ forms are submitted.

*If you need assistance in completing the form, call 1-800-PTO-9199 and select option 2.*

# Instruction Sheet for
# Petition to Make Special Under the Green Technology Pilot Program

(Not to be Submitted to the USPTO)

***The following is a summary of the requirements (for more information see the notices (i) "Pilot Program for Green Technologies Including Greenhouse Gas Reduction," (ii) "Elimination of Classification Requirement in the Green Technology Pilot Program," and (iii) "Expansion and Extension of the Green Technology Pilot Program," available on the USPTO web site at http://www.uspto.gov/patents/init_events/green_tech.jsp):***

(1) The application must be a non-reissue, non-provisional utility application filed under 35 U.S.C. 111(a), or an international application that has entered the national stage in compliance with 35 U.S.C. 371, irrespective of the filing date of the application. Reexamination proceedings are excluded from this pilot program.

(2) The application must contain three or fewer independent claims and twenty or fewer total claims. The application must not contain any multiple dependent claims. For an application that contains more than three independent claims or twenty total claims, or multiple dependent claims, applicant must file a preliminary amendment in compliance with 37 CFR 1.121 to cancel the excess claims and/or the multiple dependent claims at the time the petition to make special is filed.

(3) The claims must be directed to a single invention that materially enhances the quality of the environment, or that materially contributes to: (1) the discovery or development of renewable energy resources; (2) the more efficient utilization and conservation of energy resources; or (3) green house gas emission reduction (see the eligibility requirements of sections II and III of the notice (i) cited above). The petition must include a statement that, if the USPTO determines that the claims are directed to multiple inventions (e.g., in a restriction requirement), applicant will agree to make an election without traverse in a telephonic interview, and elect an invention that meets the eligibility requirements in section II or III of the notice (i) cited above.

(4) The petition to make special must be timely filed electronically using the USPTO electronic filing system, EFS-Web, and selecting the document description of "Petition for Green Tech Pilot" on the EFS-Web screen. Applicant should use form PTO/SB/420, which is available as a Portable Document Format (PDF) fillable form in EFS-Web and on the USPTO Web site.

(5) The petition to make special must be filed at least one day prior to the date that a first Office action (which may be an Office action containing only a restriction requirement) appears in the Patent Application Information Retrieval (PAIR) system. Applicant may check the status of the application using PAIR.

(6) The petition to make special must be accompanied by a request for early publication in compliance with 37 CFR 1.219 and the publication fee set forth in 37 CFR 1.18(d).

# Privacy Act Statement

The **Privacy Act of 1974 (P.L. 93-579)** requires that you be given certain information in connection with your submission of the attached form related to a patent application or patent. Accordingly, pursuant to the requirements of the Act, please be advised that: (1) the general authority for the collection of this information is 35 U.S.C. 2(b)(2); (2) furnishing of the information solicited is voluntary; and (3) the principal purpose for which the information is used by the U.S. Patent and Trademark Office is to process and/or examine your submission related to a patent application or patent. If you do not furnish the requested information, the U.S. Patent and Trademark Office may not be able to process and/or examine your submission, which may result in termination of proceedings or abandonment of the application or expiration of the patent.

The information provided by you in this form will be subject to the following routine uses:

1. The information on this form will be treated confidentially to the extent allowed under the Freedom of Information Act (5 U.S.C. 552) and the Privacy Act (5 U.S.C 552a). Records from this system of records may be disclosed to the Department of Justice to determine whether disclosure of these records is required by the Freedom of Information Act.
2. A record from this system of records may be disclosed, as a routine use, in the course of presenting evidence to a court, magistrate, or administrative tribunal, including disclosures to opposing counsel in the course of settlement negotiations.
3. A record in this system of records may be disclosed, as a routine use, to a Member of Congress submitting a request involving an individual, to whom the record pertains, when the individual has requested assistance from the Member with respect to the subject matter of the record.
4. A record in this system of records may be disclosed, as a routine use, to a contractor of the Agency having need for the information in order to perform a contract. Recipients of information shall be required to comply with the requirements of the Privacy Act of 1974, as amended, pursuant to 5 U.S.C. 552a(m).
5. A record related to an International Application filed under the Patent Cooperation Treaty in this system of records may be disclosed, as a routine use, to the International Bureau of the World Intellectual Property Organization, pursuant to the Patent Cooperation Treaty.
6. A record in this system of records may be disclosed, as a routine use, to another federal agency for purposes of National Security review (35 U.S.C. 181) and for review pursuant to the Atomic Energy Act (42 U.S.C. 218(c)).
7. A record from this system of records may be disclosed, as a routine use, to the Administrator, General Services, or his/her designee, during an inspection of records conducted by GSA as part of that agency's responsibility to recommend improvements in records management practices and programs, under authority of 44 U.S.C. 2904 and 2906. Such disclosure shall be made in accordance with the GSA regulations governing inspection of records for this purpose, and any other relevant (*i.e.*, GSA or Commerce) directive. Such disclosure shall not be used to make determinations about individuals.
8. A record from this system of records may be disclosed, as a routine use, to the public after either publication of the application pursuant to 35 U.S.C. 122(b) or issuance of a patent pursuant to 35 U.S.C. 151. Further, a record may be disclosed, subject to the limitations of 37 CFR 1.14, as a routine use, to the public if the record was filed in an application which became abandoned or in which the proceedings were terminated and which application is referenced by either a published application, an application open to public inspection or an issued patent.
9. A record from this system of records may be disclosed, as a routine use, to a Federal, State, or local law enforcement agency, if the USPTO becomes aware of a violation or potential violation of law or regulation.

UNITED STATES PATENT AND TRADEMARK OFFICE

UNITED STATES DEPARTMENT OF COMMERCE
United States Patent and Trademark Office
Address: COMMISSIONER FOR PATENTS
P.O. Box 1450
Alexandria, Virginia 22313-1450
www.uspto.gov

| APPLICATION NO. | FILING DATE | FIRST NAMED INVENTOR | ATTORNEY DOCKET NO. | CONFIRMATION NO. |
|---|---|---|---|---|
| 12/983,686 | 01/03/2011 | Jeff Donald Drake | 245424-1(GECZ 201146US01) | 1861 |

27885 7590 12/21/2011
FAY SHARPE LLP
1228 Euclid Avenue, 5th Floor
The Halle Building
Cleveland, OH 44115

| EXAMINER |
|---|
| DECADY, ALBERT |

| ART UNIT | PAPER NUMBER |
|---|---|
| 2121 | |

| MAIL DATE | DELIVERY MODE |
|---|---|
| 12/21/2011 | PAPER |

**Please find below and/or attached an Office communication concerning this application or proceeding.**

The time period for reply, if any, is set in the attached communication.

UNITED STATES PATENT AND TRADEMARK OFFICE

Commissioner for Patents
United States Patent and Trademark Office
P.O. Box 1450
Alexandria, VA 22313-1450
www.uspto.gov

FAY SHARPE LLP
1228 Euclid Avenue, 5th Floor
The Halle Building
Cleveland OH 44115

In re Application of :
DRAKE, Jeff et al. :
Application No. 12/983,686 :
Filed: January 3, 2011 :
For: **SMART ENERGY DEVICE REPORTING "OPT-OUT" AUTONOMOUSLY DEPENDING ON USER SETTINGS** :

**DECISION ON PETITION TO MAKE SPECIAL UNDER THE GREEN TECHNOLOGY PILOT PROGRAM**

The petition filed November 15, 2011 has been treated as a petition under 37 CFR 1.102 to make the above-identified application special under the pilot program for applications pertaining to Green Technologies as set forth in 74 Federal Register Notice 64666 (December 8, 2009) and amended by 75 Federal Register Notice 28554 (May 21, 2010).

The petition is **DISMISSED**.

If reconsideration of this decision is desired, a petition for reconsideration must be filed within ONE (1) MONTH OR THIRTY (30) DAYS from the mail date of this decision, whichever is longer. No extension of this time limit can be granted under 37 CFR 1.136(a) or (b). The petition for reconsideration should include an exhaustive attempt to provide the lacking item(s) noted below, since, after a decision on the petition for reconsideration, no further reconsideration or review of the matter will be undertaken by the Director.

A grantable petition to make an application special under 37 CFR 1.102 and the pilot program as set forth in 74 FR 64666 must be directed to a nonprovisional application filed under 35 USC 111(a) or be a national stage entry under 35 USC 371, exclusive of any reissue applications and be filed prior to the date of the notice, December 8, 2009.

In order to qualify for special status, the following requirements must be met. 1) The application must have no more than 3 independent claims and no more than 20 total claims. 2) The application must not contain any multiple dependent claims. 3) The petition must state the basis for seeking special status, i.e., the claimed invention either: A) materially enhances the quality of the environment or B) materially contributes to: i) the discovery or development of renewable energy resources, ii) the more efficient utilization and conservation of energy resources, or iii) greenhouse gas emission reduction. 4) If the disclosure is not clear on its face that the claimed

invention materially contributes under category (A) or (B), the petition must be accompanied by a statement by the applicant, assignee, or an attorney/agent registered to practice before the Office explaining how the materiality standard is met. 5) A statement that applicant will agree to make an election without traverse in a telephonic interview if a restriction requirement is made by the examiner. 6) The petition to make special must be filed electronically. 7) The petition must be filed at least one day prior to the date that a first Office Action appears in the Patent Application Information Retrieval (PAIR) system. 8) The petition must be accompanied by a request for early publication in compliance with 37 CFR 1.219 and include the publication fee as set forth in 37 CFR 1.18(d).

The requirement for a fee for consideration of the petition to make special for applications pertaining to Green Technologies has been waived.

The petition lacks item(s) 4 above for the reasons explained in more detail below.

In the "Statement Concerning the Basis for the Special Status," petitioner states that "The present application relates to a home energy management system for receiving data indicative of a current demand state of an associated utility supplying energy. The energy management system comprising at least one home energy consuming system and a controller being configured and arranged to communicate with the at least one home energy consuming system, the controller is capable of automatically responding to the demand signal by adopting an opt-in or an opt-out status whereby the home energy consuming system operates in compliance or in noncompliance with the demand: signal. (See [0006])." However, the statements and the claims define an invention to "opt-out" or circumvents know or currently used energy conservation techniques. That is, no energy conservation is achieved once the controller adopts the "opt-out" status. As a result, the invention fails to materially contribute to the more efficient utilization of renewable energy resources, reduce greenhouse gas emission or contribute to more efficient utilization and conservation of energy resources. Furthermore, any request for reconsideration will be reviewed pursuant to Section II of the Pilot Program for Green Technologies as set forth in 74 Federal Register Notice 64666, which specifies that "materiality standard does not permit an applicant to speculate as to how a hypothetical end-user might specially apply the invention in a manner that could materially enhance the quality of the environment. Nor dies such standard permit an applicant to enjoy the benefit of advanced examination merely because some minor aspect of the claimed invention may enhance the quality of the environment."

Any reconsideration of this decision should be submitted through the USPTO electronic filing system, EFS-Web, and selecting the document description of "Petition for Green Tech Pilot" on the EFS-Web screen.

Any inquiry regarding this decision should be directed to Eddie C. Lee at (571) 272 - 1732.

/Eddie C. Lee/

Eddie C. Lee
Quality Assurance Specialist, TC 2100

**IN THE UNITED STATES PATENT AND TRADEMARK OFFICE**

| | |
|---|---|
| **First Named Inventor:** | ) |
| **Confirmation No.: 1861** | ) |
| | ) |
| **Serial No.: 12/983,686** | ) |
| | ) |
| **Filing Date: 01-03-2011** | ) |
| | ) |
| **Atty Docket No.: 245424-1 (GECZ 201146US01)** | ) |

Commissioner for Patents
P.O. Box 1450
Alexandria, VA 22313-1450

**Request for Reconsideration**

SIR:

This is responsive to the Decision on Petition, dated as mailed 21 December 2011, in the above-referenced application.

Applicant respectfully requests reconsideration of Applicant's Petition to Make Special on the basis that the present invention materially contributes to energy conservation.

The Decision to Make Special Under the Green Technology Pilot Program (hereinafter "the Decision") states that it is not agreed that the application on its face meets the materiality standard. The Decision alleges that the claims define an invention to "opt-out" or circumvents known or currently used energy conservation techniques. The Decision alleges that no energy conservation is achieved once the controller adopts the "opt-out" status. As a result, the Decision concludes that the invention fails to materially contribute to the more efficient utilization of and conservation of energy resources. The Decision also implies that Applicant speculates as to how a hypothetical end-user might specially apply

the invention in a manner that could materially enhance the quality of the environment. Applicant does not agree with the comments made in the Decision.

Applicant respectfully submits that embodiments of the present invention relate to energy management, and more particularly to a premise energy management system for management of household appliances, as well as other energy consuming devices and systems generally found in the home. The disclosure finds particular application to changing existing appliances via add-on features or modules and incorporating an override capability in response to a demand signal sent by a utility company. (see at least paragraph [0001]).

Smart technology generally relates to a class of technology that uses computer-based remote control and automation. These systems are made possible by two-way communication technology and computer processing and offer many benefits to utilities and consumers; mostly seen in big improvements in energy efficiency. Amongst several benefits, smart energy technologies allow for greater informational awareness and control of energy flow. This informational awareness allows consumers to interface with their energy consumption, providing new levels of detail on how, and how much, electricity is being consumed and at what cost in real time, and give them the tools to increase or decrease their consumption. It also allows utilities to more efficiently manage and adjust electricity transmission, reducing the likelihood of outages and congestion while improving billing accuracy for consumers. Smart energy generally provides consumers and utilities a greater ability to adapt to changing market conditions for greater energy efficiency. ("Smart Grid", Office of Electricity Delivery & Energy Reliability. 2011. Web. 28 July 2011).

The increasing cost of fuel prices and high energy usage rates at certain parts of the day have prompted utilities to charge higher rates during periods of peak demand. If peak demand can be lowered, then a homeowner or consumer can achieve a potential cost savings and the peak load that the utility company has to accommodate is reduced. This phenomenon coupled with cost efficient communication technology has brought about attempts to mitigate energy usage and to lower energy costs. (see at least paragraph [0002]).

More particularly, one proposed solution is to provide a system where a controller at a home switches the actual energy supply to the appliance or control unit "on" and "off" during periods of high energy demand. However, this solution provides no active control beyond merely turning the appliance or device on and off. Other proposed solutions include different, more sophisticated methods to determine when variable electricity-pricing schemes go into effect. These methods typically use phone lines, schedules, and wireless signals sent by the electrical company to the controller at the home. One problem with this approach is that different electrical companies use different methods of communicating periods of high electrical demand to the homeowner and some electrical companies have rate schedules for different times of the day. (see at least paragraph [0003]).

Still, other electrical companies are moving to an advanced metering infrastructure (AMI) system. This system has the capability to communicate with home energy consumption systems such as appliances, HVAC, lighting systems, etc. in a home or office building. Known systems do not communicate directly

with the appliance but instead use a variety of communications methods, systems, and protocols to communicate with a controller at the home. Further, a modular and standard method has not been created for communication devices to interface and communicate operational modes to the main controller of the appliance or system. (see at least paragraph [0004]).

Additionally, home energy management (HEM) systems are being used to reduce energy consumption in homes and buildings. This development has prompted some electrical companies to implement or plan on implementing a system to communicate a demand signal to a home energy management system, and more particularly to a home energy consuming system, to activate a change in operation of the appliance or system that limits energy consumption being consumed by the system or appliance. This demand signal and resultant operational change in the appliance or system would certainly reduce the amount of energy consumption. However, if the operational change is automatically instituted in response to the demand signal, homeowners are prevented from having the option to control certain home energy consumption systems in a manner that is tailored to the specific energy usage needs of the individual consumer. Therefore, there is a need to provide an individual the option to automatically opt in or opt out of demand response events, e.g., peak pricing periods, when an associated utility sends a demand signal to a home energy management system that otherwise alters use or operation of an appliance or device within the home. (see at least paragraph [0005]).

The present disclosure relates to a home energy management system for receiving data indicative of a current demand state of an associated utility supplying energy. The energy management system comprising at least one home energy consuming system and a controller being configured and arranged to communicate with the at least one home energy consuming system, the controller is capable of automatically responding to the demand signal by adopting an opt-in or an opt-out status whereby the home energy consuming system operates in compliance or in noncompliance with the demand signal. (see at least paragraph [0006]).

An advantage of the present disclosure is a system that gives a user the ability to set up the appliances or devices to respond automatically to a demand signal provided by a utility or a third party company. Another advantage of the present disclosure relates to a system that gives the user the ability to set up their home to react to energy events (e.g., peak pricing periods) from utilities or third parties automatically in whatever preference the homeowner chooses. (see at least paragraphs [0011]-[0012]).

Amongst several benefits, embodiments of the present invention allow for greater informational awareness and control of energy flow, which has been shown to encourage reductions in energy consumption, and results in greater energy efficiency on the part of consumers and utilities. As such, the present invention promotes the more efficient utilization of and conservation of energy.

The undersigned attorney may be contacted at the number below to facilitate the resolution of any matters. Please charge any fees that are incurred in connection with this Statement to deposit account no. 09-0470.

Respectfully submitted,

General Electric Company

By : /Allison W Mages/
Allison Weiner Mages
Reg. No. 57,275

Dated: January 20, 2012

GE Global Patent Operation
2 Corporate Drive, Suite 648
Shelton, CT 06484
203-944-6730

UNITED STATES PATENT AND TRADEMARK OFFICE

UNITED STATES DEPARTMENT OF COMMERCE
United States Patent and Trademark Office
Address: COMMISSIONER FOR PATENTS
P.O. Box 1450
Alexandria, Virginia 22313-1450
www.uspto.gov

| APPLICATION NO. | FILING DATE | FIRST NAMED INVENTOR | ATTORNEY DOCKET NO. | CONFIRMATION NO. |
|---|---|---|---|---|
| 12/983,686 | 01/03/2011 | Jeff Donald Drake | 245424-1(GECZ 201146US01) | 1861 |

27885 7590 01/30/2012
FAY SHARPE LLP
1228 Euclid Avenue, 5th Floor
The Halle Building
Cleveland, OH 44115

| EXAMINER |
|---|
| DECADY, ALBERT |

| ART UNIT | PAPER NUMBER |
|---|---|
| 2121 | |

| MAIL DATE | DELIVERY MODE |
|---|---|
| 01/30/2012 | PAPER |

**Please find below and/or attached an Office communication concerning this application or proceeding.**

The time period for reply, if any, is set in the attached communication.

UNITED STATES PATENT AND TRADEMARK OFFICE

Commissioner for Patents
United States Patent and Trademark Office
P.O. Box 1450
Alexandria, VA 22313-1450
www.uspto.gov

FAY SHARPE LLP
1228 Euclid Avenue, 5th Floor
The Halle Building
Cleveland OH 44115

1/30/12

| | | |
|---|---|---|
| In re Application of | : | |
| Jeff D. Drake et al. | : | DECISION ON PETITION |
| Application No. 12/983,686 | : | TO MAKE SPECIAL UNDER |
| Filed: January 03, 2011 | : | THE GREEN TECHNOLOGY |
| Attorney Docket No. 245424-1 (GECZ 201146US01) | : | PILOT PROGRAM |

This is a decision on the petition under 37 CFR 1.102, filed January 20, 2012, to make the above-identified application special under the pilot program for applications pertaining to Green Technologies as set forth in 74 Federal Register Notice 64666 (December 8, 2009) and amended by 75 Federal Register Notice 28554 (May 21, 2010), 75 Federal Register Notice 69049 (November 10, 2010) and 76 Federal Register Notice 77979 (December 15, 2011).

The petition is **GRANTED**.

A grantable petition to make an application special under 37 CFR 1.102 and the pilot program as set forth in 74 FR 64666 must be directed to a nonprovisional application filed under 35 USC 111(a) or be a national stage entry under 35 USC 371, exclusive of any reissue applications.

In order to qualify for special status, the following requirements must be met. 1) The application must have no more than 3 independent claims and no more than 20 total claims. 2) The application must not contain any multiple dependent claims. 3) The petition must state the basis for seeking special status, i.e., the claimed invention either: A) materially enhances the quality of the environment or B) materially contributes to: i) the discovery or development of renewable energy resources, ii) the more efficient utilization and conservation of energy resources, or iii) greenhouse gas emission reduction. 4) If the disclosure is not clear on its face that the claimed invention materially contributes under category (A) or (B), the petition must be accompanied by a statement by the applicant, assignee, or an attorney/agent registered to practice before the Office explaining how the materiality standard is met. 5) A statement that applicant will agree to make an election without traverse in a telephonic interview if a restriction requirement is made by the examiner. 6) The petition to make special must be filed electronically. 7) The petition must be filed at least one day prior to the date that a first Office Action appears in the Patent Application Information Retrieval (PAIR) system. 8) The petition must be accompanied by a request for early publication in compliance with 37 CFR 1.219 and include the publication fee as set forth in 37 CFR 1.18(d).

The requirement for a fee for consideration of the petition to make special for applications pertaining to Green Technologies has been waived.

The instant petition complies with items 1 – 8 above. Accordingly, the above-identified application has been accorded "special" status.

Telephone inquires concerning this decision should be directed to Blaine Copenheaver at 571-272-1156.

/Blaine Copenheaver/

Blaine Copenheaver
Quality Assurance Specialist
Technology Center 1700

UNITED STATES PATENT AND TRADEMARK OFFICE

UNITED STATES DEPARTMENT OF COMMERCE
United States Patent and Trademark Office
Address: COMMISSIONER FOR PATENTS
P.O. Box 1450
Alexandria, Virginia 22313-1450
www.uspto.gov

| APPLICATION NO. | FILING DATE | FIRST NAMED INVENTOR | ATTORNEY DOCKET NO. | CONFIRMATION NO. |
|---|---|---|---|---|
| 12/983,713 | 01/03/2011 | Akihiko Nishio | 009289-20159 | 1915 |

52989 7590 01/25/2011
Dickinson Wright PLLC
James E. Ledbetter, Esq.
International Square
1875 Eye Street, N.W., Suite 1200
Washington, DC 20006

| EXAMINER |
|---|

| ART UNIT | PAPER NUMBER |
|---|---|
| 2469 | |

| MAIL DATE | DELIVERY MODE |
|---|---|
| 01/25/2011 | PAPER |

**Please find below and/or attached an Office communication concerning this application or proceeding.**

The time period for reply, if any, is set in the attached communication.

UNITED STATES PATENT AND TRADEMARK OFFICE

Commissioner for Patents
United States Patent and Trademark Office
P.O. Box 1450
Alexandria, VA 22313-1450
www.uspto.gov

Dickinson Wright PLLC
James E. Ledbetter, Esq.
International Square
1875 Eye Street, N.W., Suite 1200
Washington DC 20006

In re Application of: NISHIO, AKIHIKO et al.
Application No. 12983713
Filed: January 3, 2011
For: MOBILE STATION APPARATUS AND METHOD FOR RECEIVING DATA

DECISION ON REQUEST TO PARTICIPATE IN PATENT PROSECUTION HIGHWAY PROGRAM AND PETITION TO MAKE SPECIAL UNDER 37 CFR 1.102(d)

MAILED

JAN 25 2011

DIRECTOR OFFICE
TECHNOLOGY CENTER 2400

This is a decision on the request to participate in the Patent Prosecution Highway (PPH) program and the petition under 37 CFR 1.102(d), filed January 4, 2011, to make the above-identified application special.

The petition is **GRANTED.**

A grantable request to participate in the PPH program and petition to make special require:

(1) The U.S. application is
- (a) a Paris Convention application which either (i) validly claims priority under 35 U.S.C. 119(a) and 37 CFR 1.55 to one or more applications filed in the JPO, or (ii) validly claims priority to a PCT application that contains no priority claims, or
- (b) a national stage application under the PCT (an application which entered the national stage in the U.S. from a PCT international application after compliance with 35 U.S.C. 371), which PCT application (i) validly claims priority to an application filed in the JPO, or (ii) validly claims priority to a PCT application that contains no priority claims, or (iii) contains no priority claim, or
- (c) a so-called bypass application filed under 35 U.S.C. 111 (a) which validly claims benefit under 35 U.S.C. 120 to a PCT application, which PCT application (i) validly claims priority to an application filed in the JPO, or (ii) validly claims priority to a PCT application that contains no priority claims, or (iii) contains no priority claim.

Where the JPO application that contains the allowable/patentable claims is not the same application for which priority is claimed in the U.S. application, applicant must identify the relationship between the JPO application that contains the allowable/patentable claims and the JPO priority application claimed in the U.S. application.

(2) Applicant must submit a copy of (a) the allowable/patentable claim(s) from the KR application(s); (b) an English translation of the allowable/patentable claim(s), if the claims were published in a language other than English); and (c) a statement that the English translation is accurate.

(3) All the claims in the U.S. application must sufficiently correspond or be amended to sufficiently correspond to the allowable/patentable claim(s) in the JPO application(s) and Applicant must submit a claim correspondence table in English.

(4) Examination of the U.S. application has not begun.

(5) Applicant must submit (a) a copy of all the office action(s) (which are relevant to patentability), excluding "Decision to Grant a Patent" from each of the KR application(s) containing the allowable/patentable claim(s); (b) an English language translation of the JPO office action(s) (if the office action(s) are not in the English language); and (c) a statement that the English translation is accurate.

(6) Applicant must submit (a) an IDS listing the documents cited by the JPO examiner in the JPO office action (unless already filed in this application); and (b) copies of all the documents cited in the JPO office action, except U.S. patents or U.S. patent application publications (unless already filed in this application).

The request to participate in the PPH program and petition are in compliance with all the above requirements. Accordingly, the above-identified application has been accorded "special" status.

Telephone inquiries concerning this decision should be directed to the undersigned at 571-272-3088

All other inquiries concerning the examination or status of the application is accessible in the PAIR system at http://www.uspto.gov/ebc/index.html.

The application is undergoing pre-examination processing. Once it is released for examination, the application will be forwarded to the examiner for action on the merits commensurate with this decision

/Hassan Kizou/

Hassan Kizou
Quality Assurance Specialist
Technology Center 2400