UNITED STATES PATENT AND TRADEMARK OFFICE

UNITED STATES DEPARTMENT OF COMMERCE
United States Patent and Trademark Office
Address: COMMISSIONER FOR PATENTS
P.O. Box 1450
Alexandria, Virginia 22313-1450
www.uspto.gov

| APPLICATION NO. | FILING DATE | FIRST NAMED INVENTOR | ATTORNEY DOCKET NO. | CONFIRMATION NO. |
|---|---|---|---|---|
| 13/005,746 | 01/13/2011 | Nobuyuki Aoyagi | SHIN 24.608 (339243-00012 | 3160 |

26304 7590 11/03/2011
KATTEN MUCHIN ROSENMAN LLP
575 MADISON AVENUE
NEW YORK, NY 10022-2585

| EXAMINER | |
|---|---|
| ART UNIT | PAPER NUMBER |
| 2856 | |

| NOTIFICATION DATE | DELIVERY MODE |
|---|---|
| 11/03/2011 | ELECTRONIC |

**Please find below and/or attached an Office communication concerning this application or proceeding.**

The time period for reply, if any, is set in the attached communication.

Notice of the Office communication was sent electronically on above-indicated "Notification Date" to the following e-mail address(es):

nycuspto@kattenlaw.com
brendy.belony@kattenlaw.com
samson.helfgott@kattenlaw.com

UNITED STATES PATENT AND TRADEMARK OFFICE

Commissioner for Patents
United States Patent and Trademark Office
P.O. Box 1450
Alexandria, VA 22313-1450
www.uspto.gov

KATTEN MUCHIN ROSENMAN LLP
575 MADISON AVENUE
NEW YORK NY 10022-2585

*In re* Application of
AOYAGI, *et al.*
Application No.: 13/005,746
Filed: 13 January 2011
Attorney Docket No.: SHIN 24.608
(339243-00012)
For: METHOD AND APPARATUS FOR PASS/FAIL DETERMINATION OF BONDING AND BONDING APPARATUS

: DECISION ON REQUEST TO
: PARTICIPATE IN THE PATENT
: PROSECUTION HIGHWAY
: PROGRAM AND PETITION
: TO MAKE SPECIAL UNDER
: 37 CFR 1.102(a)

This is a decision on the request to participate in the Patent Prosecution Highway (PPH) program and the petition under 37 CFR 1.102(a), filed 29 July 2011, to make the above-identified application special.

The request and petition are **GRANTED**.

**Discussion**

A grantable request to participate in the PPH pilot program and petition to make special require:

1. The U.S. application is

    a. a Paris Convention application which either
        i. validly claims priority under 35 U.S.C. 119(a) and 37 CFR 1.55 to one or more applications filed in the JPO, or
        ii. validly claims priority to a PCT application that contains no priority claims, or
    b. a national stage application under the PCT (an application which entered the national stage in the U.S. from a PCT international application after compliance with 35 U.S.C. 371), which PCT application
        i. validly claims priority to an application filed in the JPO, or
        ii. validly claims priority to a PCT application that contains no priority claims, or
        iii. contains no priority claim, or
    c. a so-called bypass application filed under 35 U.S.C. 111(a) which validly claims benefit under 35 U.S.C. 120 to a PCT application, which PCT application
        i. validly claims priority to an application filed in the JPO, or

ii. validly claims priority to a PCT application that contains no priority claims, or
iii. contains no priority claim;

2. Applicant must submit a copy of:
   a. The allowable/patentable claim(s) from the JPO application(s);
   b. An English translation of the allowable/patentable claim(s) and
   c. A statement that the English translation is accurate;
3. Applicant must:
   a. Ensure all the claims in the U.S. application must sufficiently correspond or be amended to sufficiently correspond to the allowable/patentable claim(s) in the JPO application(s) and
   b. Submit a claims correspondence table in English;
4. Examination of the U.S. application has not begun;
5. Applicant must submit:
   a. Documentation of prior office action:
      i. a copy of the office action(s) just prior to the "Decision to Grant a Patent" from each of the JPO application(s) containing the allowable/patentable claim(s) or
      ii. if the allowable/patentable claims(s) are from a "Notification of Reasons for Refusal" then the Notification of Reasons for Refusal or
      iii. if the JPO application is a first action allowance then no office action from the JPO is necessary should be indicated on the request/petition form;
   b. An English language translation of the JPO Office action from (5)(a)(i)-(ii) above
   c. A statement that the English translation is accurate;
6. Applicant must submit:
   a. An IDS listing the documents cited by the JPO examiner in the JPO office action (unless already submitted in this application)
   b. Copies of the documents except U.S. patents or U.S. patent application publications (unless already submitted in this application);

The request to participate in the PPH pilot program and petition comply with the above requirements. Accordingly, the above-identified application has been accorded "special" status.

Inquiries concerning this decision should be directed to Michael Day at 571-272-1568.

All other inquiries concerning the examination or status of the application is accessible in the PAIR system at http://www.uspto.gov/ebc.index.html.

This application will be forwarded to the examiner for action on the merits commensurate with this decision once this application's formality reviews have been completed.

/Michael Day/
Michael Day
Quality Assurance Specialist
Technology Center 2800

UNITED STATES PATENT AND TRADEMARK OFFICE

UNITED STATES DEPARTMENT OF COMMERCE
United States Patent and Trademark Office
Address: COMMISSIONER FOR PATENTS
P.O. Box 1450
Alexandria, Virginia 22313-1450
www.uspto.gov

| APPLICATION NO. | FILING DATE | FIRST NAMED INVENTOR | ATTORNEY DOCKET NO. | CONFIRMATION NO. |
|---|---|---|---|---|
| 13/005,848 | 01/13/2011 | Shigeyasu KISHIOKA | P/3541-293 (V18078) | 3345 |

2352 7590 07/26/2011

OSTROLENK FABER LLP
1180 AVENUE OF THE AMERICAS
NEW YORK, NY 10036-8403

| EXAMINER | |
|---|---|
| ART UNIT | PAPER NUMBER |
| 3739 | |

| MAIL DATE | DELIVERY MODE |
|---|---|
| 07/26/2011 | PAPER |

**Please find below and/or attached an Office communication concerning this application or proceeding.**

The time period for reply, if any, is set in the attached communication.

UNITED STATES PATENT AND TRADEMARK OFFICE

Commissioner for Patents
United States Patent and Trademark Office
P.O. Box 1450
Alexandria, VA 22313-1450
www.uspto.gov

OSTROLENK FABER LLP
1180 AVENUE OF THE AMERICAS
NEW YORK NY 10036-8403

*In re* Application of:
KISHIOKA, SHIGEYASU
Serial No.: 13/005848
Filed: 01/13/2011
Attorney Docket No. : P/3541-293 (V18078)
Title: ENDOSCOPE APPARATUS

DECISION ON A REQUEST TO PARTICIPATE IN PATENT PCT/PROSECUTION HIGHWAY PROGRAM AND PETITION TO MAKE SPECIAL UNDER CFR 1.102(a)

This is a decision on the request to participate in the Patent Prosecution Highway (PPH) program and the petition under 37 CFR 1.102(a), filed April 15, 2011 to make the above-identified application special.

The request and petition are **granted**.

A grantable request to participate in the PPH pilot program and petition to make special require:

(1) The U.S. application must validly claim priority under 35 U.S.C. 119(a) to one or more applications filed in the JPO;
(2) Applicant must submit a copy of the allowable/patentable claim(s) from the JPO application(s);
(3) All the claims in the U.S. application must sufficiently correspond or be amended to sufficiently correspond to the allowable/patentable claim(s) in the JPO application(s);
(4) Examination of the U.S. application has not begun;
(5) Applicant must submit a copy of all the office actions from each of the JPO application(s) containing the allowable/patentable claim(s) along with an English translation thereof and a statement that the English translation is accurate; and
(6) Applicant must submit an IDS listing the documents cited by the JPO examiner in the JPO office action along with copies of documents except U.S. patents or U.S. patent application publications.

In light of the petition being properly submitted, the request to participate in the PPH program and the petition comply with the above requirements. Accordingly, the above-identified application has been accorded "special" status.

The applicant is encouraged to cite and submit all relevant prior art references, if any, to facilitate examination in this application.

Response must be filed via EFS-Web. Telephone inquiries concerning this decision should be directed to Henry C. Yuen, at 571-272-4856.

Petition is **granted**.

/Henry C. Yuen/

Henry C. Yuen
Special Programs Examiner
Technology Center 3700
Tel: 571-272-4856

UNITED STATES PATENT AND TRADEMARK OFFICE

UNITED STATES DEPARTMENT OF COMMERCE
United States Patent and Trademark Office
Address: COMMISSIONER FOR PATENTS
P.O. Box 1450
Alexandria, Virginia 22313-1450
www.uspto.gov

| APPLICATION NO. | FILING DATE | FIRST NAMED INVENTOR | ATTORNEY DOCKET NO. | CONFIRMATION NO. |
|---|---|---|---|---|
| 13/005,909 | 01/13/2011 | Toshimitsu WATANABE | 062807-0686 | 3463 |

20277 7590 03/23/2011

MCDERMOTT WILL & EMERY LLP
600 13TH STREET, N.W.
WASHINGTON, DC 20005-3096

| EXAMINER | |
|---|---|
| ART UNIT | PAPER NUMBER |
| 2484 | |

| MAIL DATE | DELIVERY MODE |
|---|---|
| 03/23/2011 | PAPER |

**Please find below and/or attached an Office communication concerning this application or proceeding.**

The time period for reply, if any, is set in the attached communication.

UNITED STATES PATENT AND TRADEMARK OFFICE

Commissioner for Patents
United States Patent and Trademark Office
P.O. Box 1450
Alexandria, VA 22313-1450
www.uspto.gov

MCDERMOTT WILL & EMERY LLP
600 13TH STREET, N.W.
WASHINGTON DC 20005-3096

In re Application of: Watanabe et al.
Application No. 13/005,909
Filed: January 13, 2011
For: VIDEO SIGNAL TRANSMITTING APPARATUS AND VIDEO SIGNAL RECEIVING APPARATUS

DECISION ON REQUEST TO PARTICIPATE IN PATENT PROSECUTION HIGHWAY PROGRAM AND PETITION TO MAKE SPECIAL UNDER 37 CFR 1.102(d)

MAILED

MAR 23 2011

DIRECTOR OFFICE
TECHNOLOGY CENTER 2400

This is a decision on the request to participate in the Patent Prosecution Highway (PPH) program and the renewed petition under 37 CFR 1.102(d), filed January 24, 2011, to make the above-identified application special.

The petition is **GRANTED.**

A grantable request to participate in the PPH program and petition to make special require:

(1) The U.S. application is
(a) a Paris Convention application which either (i) validly claims priority under 35 U.S.C. 119(a) and 37 CFR 1.55 to one or more applications filed in the JPO, or (ii) validly claims priority to a PCT application that contains no priority claims, or
(b) a national stage application under the PCT (an application which entered the national stage in the U.S. from a PCT international application after compliance with 35 U.S.C. 371), which PCT application (i) validly claims priority to an application filed in the JPO, or (ii) validly claims priority to a PCT application that contains no priority claims, or (iii) contains no priority claim, or
(c) a so-called bypass application filed under 35 U.S.C. 111 (a) which validly claims benefit under 35 U.S.C. 120 to a PCT application, which PCT application (i) validly claims priority to an application filed in the JPO, or (ii) validly claims priority to a PCT application that contains no priority claims, or (iii) contains no priority claim.

Where the JPO application that contains the allowable/patentable claims is not the same application for which priority is claimed in the U.S. application, applicant must identify the relationship between the JPO application that contains the allowable/patentable claims and the JPO priority application claimed in the U.S. application;

(2) Applicant must submit a copy of:
a. The allowable/patentable claim(s) from the Japanese application(s);
b. An English translation of the allowable/patentable claim(s), if the claims were published in a language other than English); and
c. A statement that the English translation is accurate;

(3) Applicant must:
a. Ensure that all the claims in the U.S. application sufficiently correspond or be amended to sufficiently correspond to the allowable/patentable claim(s) in the JPO application(s) and
b. Submit a claim correspondence table in English;

(4) Examination of the U.S. application has not begun;

(5) Applicant must submit:
a. A copy of all the office action(s) (which are relevant to patentability), excluding "Decision to Grant a Patent" from each of the Japanese application(s) containing the allowable/patentable claim(s);
b. An English language translation of the JPO office action(s) (if the office action(s) are not in the English language); and
c. A statement that the English translation is accurate;

(6) Applicant must submit:
a. An IDS listing the documents cited by the JPO examiner in the JPO office action (unless already filed in this application); and
b. Copies of all the documents cited in the JPO office action, except U.S. patents or U.S. patent application publications (unless already filed in this application).

The request to participate in the PPH program and petition are found to comply with all the above requirements. Accordingly, the above-identified application has been accorded "special" status.

Telephone inquiries concerning this decision should be directed to Christopher Grant at 571-272-7294.

All other inquiries concerning the examination or status of the application is accessible in the PAIR system at http://www.uspto.gov/ebc/index.html.

The application is being forwarded to the examiner for action on the merits commensurate with this decision.

/Christopher Grant/

Christopher Grant
Quality Assurance Specialist
Technology Center 2400

UNITED STATES PATENT AND TRADEMARK OFFICE

Commissioner for Patents
United States Patent and Trademark Office
P.O. Box 1450
Alexandria, VA 22313-1450
www.uspto.gov

In re Application of
Walter E. Pelton

Application No. 13006031

Filed: January 13,2011

Attorney Docket No. WOFC-002

:
:
:DECISION ON PETITION TO MAKE SPECIAL
:UNDER 37 CFR 1.102(c)(1)
:

This is a decision on the electronic petition under 37 CFR 1.102 (c)(1), filed 01-APR-2011 to make the above-identified application special based on applicant's age as set forth in MPEP § 708.02, Section IV.

The petition is **GRANTED**.

A grantable petition to make an application special under 37 CFR 1.102(c)(1), MPEP § 708.02, Section IV: Applicant's Age must include a statement by applicant or a registered practitioner having evidence that applicant is at least 65 years of age. No fee is required.

Accordingly, the above-identified application has been accorded "special" status and will be taken up for action by the examiner upon the completion of all pre-examination processing.

Telephone inquiries concerning this electronic decision should be directed to the Electronic Business Center at 866-217-9197.

All other inquiries concerning either the examination or status of the application should be directed to the Technology Center.

Doc code : PET.OP.AGE
Description : Petition to make special based on Age/Health

PTO/SB/130 (07-09)
Approved for use through 07/31/2012. OMB 0651- 0031
U.S. Patent and Trademark Office; U.S. DEPARTMENT OF COMMERCE
Under the Paperwork Reduction Act of 1995, no persons are required to respond to a collection of information unless it contains a valid OMB control number

## PETITION TO MAKE SPECIAL BASED ON AGE FOR ADVANCEMENT OF EXAMINATION UNDER 37 CFR 1.102(c)(1)

### Application Information

| | | | | | |
|---|---|---|---|---|---|
| Application Number | 13006031 | Confirmation Number | 3670 | Filing Date | 2011-01-13 |
| Attorney Docket Number (optional) | WOFC-002 | Art Unit | 1725 | Examiner | Jonathan Leong |
| First Named Inventor | Walter E. Pelton | | | | |
| Title of Invention | Methods and apparatuses for distributed fuel cells with nanotechnology | | | | |

**Attention: Office of Petitions**

An application may be made special for advancement of examination upon filing of a petition showing that the applicant is 65 years of age, or more. No fee is required with such a petition. See 37 CFR 1.102(c)(1) and MPEP 708.02 (IV).

APPLICANT HEREBY PETITIONS TO MAKE SPECIAL FOR ADVANCEMENT OF EXAMINATION IN THIS APPLICATION UNDER 37 CFR 1.102(c)(1) and MPEP 708.02 (IV) ON THE BASIS OF THE APPLICANT'S AGE.

A grantable petition requires one of the following items:
(1) Statement by one named inventor in the application that he/she is 65 years of age, or more; or
(2) Certification by a registered attorney/agent having evidence such as a birth certificate, passport, driver's license, etc. showing one named inventor in the application is 65 years of age, or more.

**Name of Inventor who is 65 years of age, or older**

| Given Name | Middle Name | Family Name | Suffix |
|---|---|---|---|
| Walter | E. | Pelton | |

A signature of the applicant or representative is required in accordance with 37 CFR 1.33 and 10.18.
Please see 37 CFR 1.4(d) for the format of the signature.

Select (1) or (2) :

(●) (1) I am an inventor in this application and I am 65 years of age, or more.

( ) (2) I am an attorney or agent registered to practice before the Patent and Trademark Office, and I certify that I am in possession of evidence, and will retain such in the application file record, showing that the inventor listed above is 65 years of age, or more.

| | | | |
|---|---|---|---|
| Signature | /Walter E. Pelton/ | Date (YYYY-MM-DD) | 2011-04-01 |
| Name | Walter E. Pelton | | |

PTO/SB/130 (07-09)
Approved for use through 07/31/2012. OMB 0651- 0031
U.S. Patent and Trademark Office; U.S. DEPARTMENT OF COMMERCE
Under the Paperwork Reduction Act of 1995, no persons are required to respond to a collection of information unless it contains a valid OMB control number

# Privacy Act Statement

The Privacy Act of 1974 (P.L. 93-579) requires that you be given certain information in connection with your submission of the attached form related to a patent application or patent. Accordingly, pursuant to the requirements of the Act, please be advised that: (1) the general authority for the collection of this information is 35 U.S.C. 2(b)(2); (2) furnishing of the information solicited is voluntary; and (3) the principal purpose for which the information is used by the U.S. Patent and Trademark Office is to process and/or examine your submission related to a patent application or patent. If you do not furnish the requested information, the U.S. Patent and Trademark Office may not be able to process and/or examine your submission, which may result in termination of proceedings or abandonment of the application or expiration of the patent.

The information provided by you in this form will be subject to the following routine uses:

1. The information on this form will be treated confidentially to the extent allowed under the Freedom of Information Act (5 U.S.C. 552) and the Privacy Act (5 U.S.C. 552a). Records from this system of records may be disclosed to the Department of Justice to determine whether the Fr eedom of Information Act requires disclosure of these records.

2. A record from this system of records may be disclosed, as a routine use, in the course of presenting evidence to a court, magistrate, or administrative tribunal, including disclosures to opposing counsel in the course of settlement negotiations.

3. A record in this system of records may be disclosed, as a routine use, to a Member of Congress submitting a request involving an individual, to whom the record pertains, when the individual has requested assistance from the Member with respect to the subject matter of the record.

4. A record in this system of records may be disclosed, as a routine use, to a contractor of the Agency having need for the information in order to perform a contract. Recipients of information shall be required to comply with the requirements of the Privacy Act of 1974, as amended, pursuant to 5 U.S.C. 552a(m).

5. A record related to an International Application filed under the Patent Cooperation Treaty in this system of records may be disclosed, as a routine use, to the International Bureau of the World Intellectual Property Organization, pursuant to the Patent Cooperation Treaty.

6. A record in this system of records may be disclosed, as a routine use, to another federal agency for purposes of National Security review (35 U.S.C. 181) and for review pursuant to the Atomic Energy Act (42 U.S.C. 218(c)).

7. A record from this system of records may be disclosed, as a routine use, to the Administrator, General Services, or his/her designee, during an inspection of records conducted by GSA as part of that agency's responsibility to recommend improvements in records management practices and programs, under authority of 44 U.S.C. 2904 and 2906. Such disclosure shall be made in accordance with the GSA regulations governing inspection of records for this purpose, and any other relevant (i.e., GSA or Commerce) directive. Such disclosure shall not be used to make determinations about indivi duals.

8. A record from this system of records may be disclosed, as a routine use, to the public after either publication of the application pursuant to 35 U.S.C. 122(b) or issuance of a patent pursuant to 35 U.S.C. 151. Further, a record may be disclosed, subject to the limitations of 37 CFR 1.14, as a routine use, to the public if the record was filed in an application which became abandoned or in which the proceedings were terminated and which application is referenced by either a published application, an application open to public inspections or an issued patent.

9. A record from this system of records may be disclosed, as a routine use, to a Federal, State, or local law enforcement agency, if the USPTO becomes aware of a violation or potential violation of law or regulation.

**Doc Code: PET.GREEN**
**Document Description: Petition for Green Tech Pilot**

PTO/SB/420 (05-10)
Approved for use through 05/31/2010. OMB 0651-0062
U.S. Patent and Trademark Office; U. S. DEPARTMENT OF COMMERCE
Under the Paperwork Reduction Act of 1995, no persons are required to respond to a collection of information unless it displays a valid OMB control number.

# PETITION TO MAKE SPECIAL UNDER THE GREEN TECHNOLOGY PILOT PROGRAM

| Attorney Docket Number: 3449-1609PUS1 | Application Number (if known): 13/006,097 | Filing date: January 13, 2011 |
|---|---|---|
| First Named Inventor: Kyoung Woo JO | | |
| Title: LIGHT EMITTING DEVICE CHIP, LIGHT EMITTING DEVICE PACKAGE | | |

**APPLICANT HEREBY REQUESTS TO PARTICIPATE IN THE GREEN TECHNOLOGY PILOT PROGRAM FOR THE ABOVE-IDENTIFIED APPLICATION. See Instruction Sheet on page 2.**

This petition must be timely filed electronically using the USPTO electronic filing system, EFS-Web.

1. By filing this petition:

   **Applicant is requesting early publication: Applicant hereby requests early publication under 37 CFR 1.219 and the publication fee set forth in 37 CFR 1.18(d) accompanies this request.**

2. By filing this petition: applicant is agreeing to make an election without traverse in a telephonic interview and elect an invention that meets the eligibility requirements set forth in the notice titled "Pilot Program for Green Technologies Including Greenhouse Gas Reduction," as modified by the notice titled "Elimination of Classification Requirement in the Green Technology Pilot Program," each of which was published in the Federal Register, if the Office determines that the claims are not obviously directed to a single invention.

3. This request is accompanied by statements of special status for the eligibility requirement.

4. The application contains no more than three (3) independent claims and twenty (20) total claims.

5. The application does not contain any multiple dependent claims.

6. Other attachments: _____

| Signature | Date May 20, 2011 |
|---|---|
| Name (Print/Typed) James T. Eller, Jr. | Registration Number 39538 |

***Note:*** *Signatures of all the inventors or assignees of record of the entire interest or their representative(s) are required in accordance with 37 CFR 1.33 and 11.18. Please see 37 CFR 1.4(d) for the form of the signature. If necessary, submit multiple forms for more than one signature, see below*.*

☐ *Total of _____ forms are submitted.

The information is required to obtain or retain a benefit by the public which is to file (and by the USPTO to process) an application. Confidentiality is governed by 35 U.S.C. 122 and 37 CFR 1.11 and 1.14. This collection is estimated to take 12 hours to complete, including gathering, preparing, and submitting the completed application form to the USPTO. Time will vary depending upon the individual case. Any comments on the amount of time you require to complete this form and/or suggestions for reducing this burden, should be sent to the Chief Information Officer, U.S. Patent and Trademark Office, U.S. Department of Commerce, P.O. Box 1450, Alexandria, VA 22313-1450. DO NOT SEND FEES OR COMPLETED FORMS TO THIS ADDRESS. **SEND TO: Commissioner for Patents, P.O. Box 1450, Alexandria, VA 22313-1450.**

*If you need assistance in completing the form, call 1-800-PTO-9199 and select option 2.*

Docket No.: 3449-1609PUS1
(Patent)

**IN THE UNITED STATES PATENT AND TRADEMARK OFFICE**

| | | |
|---|---|---|
| Patent Application of: | Kyoung Woo JO et al. | |
| Application No.: | 13/006,097 | Confirmation No.: 3804 |
| Filed: | January 13, 2011 | Art Unit: |
| For: | LIGHT EMITTING DEVICE CHIP, LIGHT EMITTING DEVICE PACKAGE | Examiner: |

**STATEMENT OF SPECIAL STATUS FOR THE ELIGIBILITY REQUIREMENT UNDER THE GREEN TECHNOLOGY PILOT PROGRAM**

Commissioner for Patents
P.O. Box 1450
Alexandria, VA 22313-1450

Sir:

In support of the Petition to Make Special Under the Green Technology Pilot Program, it is respectfully submitted that the basis for the requested special status is that the invention claimed in the above-identified patent application materially contributes to the development of environmental quality and energy conservation. Specifically, the claimed invention relates to a light emitting device chip having a light emitting structure made of semiconductor layers.

For example, light emitting device chips having a light emitting structure made of semiconductor layers have a much longer life-span than conventional light sources such as fluorescent tubes or other traditional light sources. Light emitting device chips having a light emitting structure made of semiconductor layers also use less energy or power to operate than other traditional light sources. Thus, the environmental quality is significantly improved and energy is conserved.

Additionally, by filing this petition, Applicants agree to make an election without traverse in a telephone interview and elect an invention that meets the eligibility requirements set forth in the notice titled "Pilot Program for Green Technologies Including Greenhouse Gas Reduction,"

as modified by the notice titled "Elimination of Classification Requirement in the Green Technology Pilot Program," each of which was published in the Federal Register, if the Office determines that the claims are not obviously directed to a single invention.

It is also submitted that this application meets the eligibility requirements to participate in the Green Technology Pilot Program, as listed in the attached Petition to Make Special Under the Green Technology Pilot Program.

Accordingly, it is respectfully requested the Petition be granted.

Should there be any outstanding matters that need to be resolved in the present application, the Examiner is respectfully requested to contact the undersigned below to conduct an interview in an effort to expedite prosecution in connection with the present application.

If necessary, the Director is hereby authorized in this, concurrent, and future replies to charge any fees required during the pendency of the above-identified application or credit any overpayment to Deposit Account No. 02-2448.

Dated: May 20, 2011

Respectfully submitted,

By _____
James T. Eller, Jr.
Registration No.: 39538
BIRCH, STEWART, KOLASCH & BIRCH, LLP
8110 Gatehouse Road, Suite 100 East
P.O. Box 747
Falls Church, VA 22040-0747
703-205-8000

UNITED STATES PATENT AND TRADEMARK OFFICE

UNITED STATES DEPARTMENT OF COMMERCE
United States Patent and Trademark Office
Address: COMMISSIONER FOR PATENTS
P.O. Box 1450
Alexandria, Virginia 22313-1450
www.uspto.gov

| APPLICATION NO. | FILING DATE | FIRST NAMED INVENTOR | ATTORNEY DOCKET NO. | CONFIRMATION NO. |
|---|---|---|---|---|
| 13/006,097 | 01/13/2011 | Yu Dong KIM | 3449-1609PUS1 | 3804 |

2292 7590 05/26/2011
BIRCH STEWART KOLASCH & BIRCH
PO BOX 747
FALLS CHURCH, VA 22040-0747

| EXAMINER | |
|---|---|
| ART UNIT | PAPER NUMBER |
| 2811 | |

| NOTIFICATION DATE | DELIVERY MODE |
|---|---|
| 05/26/2011 | ELECTRONIC |

**Please find below and/or attached an Office communication concerning this application or proceeding.**

The time period for reply, if any, is set in the attached communication.

Notice of the Office communication was sent electronically on above-indicated "Notification Date" to the following e-mail address(es):

mailroom@bskb.com

UNITED STATES PATENT AND TRADEMARK OFFICE

Commissioner for Patents
United States Patent and Trademark Office
P.O. Box 1450
Alexandria, VA 22313-1450
www.uspto.gov

BIRCH STEWART KOLASCH & BIRCH
PO BOX 747
FALLS CHURCH VA 22040-0747

| | | |
|---|---|---|
| In re Application of | : | |
| KIM et al. | : | DECISION ON PETITION |
| Application No. 13/006,097 | : | TO MAKE SPECIAL UNDER |
| Filed: January 13, 2011 | : | THE GREEN TECHNOLOGY |
| Attorney Docket No. 3449-1609PUS1 | : | PILOT PROGRAM |

This is a decision on the petition under 37 CFR 1.102, filed on May 20, 2011, to make the above-identified application special under the pilot program for applications pertaining to Green Technologies as set forth 74 Federal Register Notice 64666 (December 8, 2009) and amended by 75 Federal Register Notice 28554 (May 21, 2010) and 75 Federal Register Notice 69049 (November 10, 2010).

The petition is **GRANTED**.

A grantable petition to make an application special under 37 CFR 1.102 and the pilot program as set forth in 74 FR 64666 must be directed to a nonprovisional application filed under 35 USC 111(a) or be a national stage entry under 35 USC 371, exclusive of any reissue applications.

In order to qualify for special status, the following requirements must be met. 1) The application must have no more than 3 independent claims and no more than 20 total claims. 2) The application must not contain any multiple dependent claims. 3) The petition must state the basis for seeking special status, i.e., the claimed invention either: A) materially enhances the quality of the environment or B) materially contributes to: i) the discovery or development of renewable energy resources, ii) the more efficient utilization and conservation of energy resources, or iii) greenhouse gas emission reduction. 4) If the disclosure is not clear on its face that the claimed invention materially contributes under category (A) or (B), the petition must be accompanied by a statement by the applicant, assignee, or an attorney/agent registered to practice before the Office explaining how the materiality standard is met. 5) A statement that applicant will agree to make an election without traverse in a telephonic interview if a restriction requirement is made by the examiner. 6) The petition to make special must be filed electronically. 7) The petition must be filed at least one day prior to the date that a first Office Action appears in the Patent Application Information Retrieval (PAIR) system. 8) The petition must be accompanied by a request for early publication in compliance with 37 CFR 1.219 and include the publication fee as set forth in 37 CFR 1.18(d).

The requirement for a fee for consideration of the petition to make special for applications pertaining to Green Technologies has been waived.

The instant petition complies with items 1 – 8 above. Accordingly, the above-identified application has been accorded "special" status.

Telephone inquires concerning this decision should be directed to Lee W. Young at 571-272-4549.

The application is being forwarded to the Technology Center Art Unit 2811 for action on the merits commensurate with this decision.

Lee W. Young
Quality Assurance Specialist
Technology Center 2800

UNITED STATES PATENT AND TRADEMARK OFFICE

UNITED STATES DEPARTMENT OF COMMERCE
United States Patent and Trademark Office
Address: COMMISSIONER FOR PATENTS
P.O. Box 1450
Alexandria, Virginia 22313-1450
www.uspto.gov

| APPLICATION NO. | FILING DATE | FIRST NAMED INVENTOR | ATTORNEY DOCKET NO. | CONFIRMATION NO. |
|---|---|---|---|---|
| 13/006,190 | 01/13/2011 | Ryosuke Hiramatsu | 8073P1106 | 4009 |

7590 08/16/2011

BLAKELY SOKOLOFF TAYLOR & ZAFMAN LLP
1279 OAKMEAD PARKWAY
SUNNYVALE, CA 94085-4040

| EXAMINER | |
|---|---|
| ART UNIT | PAPER NUMBER |
| 2484 | |
| MAIL DATE | DELIVERY MODE |
| 08/16/2011 | PAPER |

# DECISION GRANTING PETITION UNDER 37 CFR 1.138(d)

*The declaration of express abandonment is recognized*

This is in response to the petition under 37 CFR 1.138(d), requesting for a refund of any previously paid search fee and excess claims fee in the above-identified application.

The petition is granted.

The express abandonment is recognized. Any previously paid search fee and excess claims fee are hereby refunded.

Telephone inquiries should be directed to the Office of Data Management at (571) 272-4200.

Patent Publication Branch
Office of Data Management

UNITED STATES PATENT AND TRADEMARK OFFICE

UNITED STATES DEPARTMENT OF COMMERCE
United States Patent and Trademark Office
Address: COMMISSIONER FOR PATENTS
P.O. Box 1450
Alexandria, Virginia 22313-1450
www.uspto.gov

| APPLICATION NO. | FILING DATE | FIRST NAMED INVENTOR | ATTORNEY DOCKET NO. | CONFIRMATION NO. |
|---|---|---|---|---|
| 13/006,302 | 01/13/2011 | Billy Bain | 4426-102 | 4241 |

23448 7590 05/16/2011

Hultquist IP
P.O. Box 14329
RESEARCH TRIANGLE PARK, NC 27709

| EXAMINER | |
|---|---|
| POON, PETER M | |
| ART UNIT | PAPER NUMBER |
| 3643 | |
| MAIL DATE | DELIVERY MODE |
| 05/16/2011 | PAPER |

**Please find below and/or attached an Office communication concerning this application or proceeding.**

The time period for reply, if any, is set in the attached communication.

UNITED STATES PATENT AND TRADEMARK OFFICE

Commissioner for Patents
United States Patent and Trademark Office
P.O. Box 1450
Alexandria, VA 22313-1450
www.uspto.gov

MAY 16 2011.

Hultquist IP
P.O. Box 14329
Research Triangle Park, NC 27709

| | | |
|---|---|---|
| In re application of | : | |
| Billy Bain | : | DECISION ON PETITION |
| Application No. 13/006,302 | : | TO MAKE SPECIAL FOR |
| Filed: January 13, 2011 | : | NEW APPLICATION |
| For: PORTABE LIVESTOCK COOLING SUSTE, | : | UNDER 37 CFR 1.102 |

This is a decision on the petition filed on January 13, 2011 to make the above-identified application special for accelerated examination procedure under 37 C.F.R. § 1.102(d).

The petition to make the application special is **DENIED.**

REGULATION AND PRACTICE

A grantable petition to make special under 37 C.F.R. § 1.102(d) and pursuant to the "Change to Practice for Petitions in Patent Applications to Make Special and for Accelerated Examination" published in the Federal Register on June 26, 2006 (71 Fed. Reg. 36323), must satisfy the following conditions:

I. Conditions Regarding the Application:

1. the application must be a non-reissue utility or design application filed under 37 CFR 1.111(a);

2. the application, the petition and the required fees must be filed electronically using the USPTO's electronic filing system (EFS), or EFS-web; if not filed electronically, a statement asserting that EFS and EFS-web were not available during the normal business hours;

3. at the time of filing, the application must be complete under 37 CFR 1.51 and in condition for examination;

4. the application must contain three or fewer independent claims and twenty or fewer total claims and the claims must be directed to a single invention.

II. Conditions Regarding the Petition:

The petition must:

1. be filed with the application;

2. include a statement that applicant agrees not to separately argue the patentability of any dependent claim during any appeal in the application;

3. include a statement that applicant agrees to make an election without traverse in a telephone interview.

4. include a statement that applicant agrees to conduct such an interview when requested by the examiner.

5. include a statement, made based on a good faith belief, that a preexamination search in compliance with the following requirements, was conducted, including an identification of the field of search by United States class and subclass, where applicable, and for database searches, the search logic or chemical structure or sequence used as a query, the name of the file(s) searched and the database service, and the date of the search.

The preexamination search must:

5.1 involve U.S. patents and patent application publications, foreign patent documents, and non-patent literature, unless the applicant can justify with reasonable certainty that no references more pertinent than those already identified are likely to be found in the eliminated sources and includes such a justification with this statement;

5.2. be directed to the claimed invention and encompass all of the features of the claims, giving the claims the broadest reasonable interpretation;

5.3. encompass the disclosed features that may be claimed.

6. must provide in support of the petition an accelerated examination support document.

An accelerated examination support document must include:

6.1. an information disclosure statement (IDS) in compliance with 37 CFR 1.98 citing each reference deemed most closely related to the subject matter of each of the claims;

6.2. an identification of all the limitations in the claims that are disclosed by the reference specifying where the limitation is disclosed in the cited reference;

6.3. a detailed explanation of how each of the claims is patentable over the references cited with particularity required by 37 CFR 1.111(b) and (c);

6.4. a concise statement of the utility of the invention as defined in each of the independent claims (unless the application is a design application);

6.5. a showing of where each limitation of the claims finds support under 35 USC 112, first paragraph, in the written description of the specification. If

applicable, the showing must also identify: (1) each means- (or step) plus-function claim element that invokes consideration under 35 USC 112, sixth paragraph; and (2) the structure, material, or acts in the specification that corresponds to each means- (or step) plus-function claim element that invokes consideration under 35 USC 112, sixth paragraph; if the application claims the benefit of one or more applications under title 35, United States Code, the showing must also include where each limitation of the claims finds support under 35 USC 112, first paragraph, in each such application in which such supports exists;

6.6. an identification of any cited references that may be disqualified under 35 USC 103(c).

## REVIEW OF FACTS

The petition fails to comply with conditions I.4, II.5, II.5.1-II.5.3, II.6 and II.6.1-II.6.6 above.

With regards to condition I.4, the application, at time of filing, contains more than three independent claims.

As to condition II.5, no statement, made based on a good faith belief, that a preexamination search in compliance with the following requirements, was conducted, including an identification of the field of search by United States class and subclass, where applicable, and for database searches, the search logic or chemical structure or sequence used as a query, the name of the file(s) searched and the database service, and the date of the search, has been provided.

As to conditions II.5.1 – II.5.3, there has been no Preexamination Search Report submitted. The USPTO website has an example of the proper manner of performing and documenting a preexamination search for Accelerated Examination petitions at: http://www.uspto.gov/web/patents/accelerated/.

As to conditions II.6 – II.6.6, the required Accelerated Examination Support Document, including an information disclosure statement, has not been submitted. The USPTO website has an example of the proper manner of documenting limitations taught by cited art, and the manner of explaining claim patentability over the references, for an Accelerated Examination Support Document at: http://www.uspto.gov/web/patents/accelerated/.

## DECISION

The petition to make special for Infringement under 37 C.F.R. § 1.102 is not acceptable at least because the application was not limited to three or fewer independent claims, as required in the above Federal Register Notice of June 26,

2006. It appears that the petition was filed under the guidelines for making an application special that were in effect prior to August 25, 2006. As of August 25, 2006 the new guidelines replaced the old guidelines. Since applicant's petition was received on January 13, 2011, the petition must be considered under the new guidelines and thus is properly **DENIED**.

The application will therefore be taken up by the examiner for action in its regular turn. Further petitions for accelerated examination in this application will not be entertained.

Any inquiry regarding this decision should be directed to Teri P. Luu, Quality Assurance Specialist, at (571) 272-7045.

/Teri P. Luu/
Teri P. Luu
Quality Assurance Specialist
Technology Center 3600

tl: 05/13/11

UNITED STATES PATENT AND TRADEMARK OFFICE

Commissioner for Patents
United States Patent and Trademark Office
P.O. Box 1450
Alexandria, VA 22313-1450
www.uspto.gov
DIW Jun-11

PATENT DOCKET ADMINISTRATOR
LOWENSTEIN SANDLER PC
65 LIVINGSTON AVENUE
ROSELAND NJ 07068

**MAILED**

**JUN 22 2011**

**OFFICE OF PETITIONS**

| | | |
|---|---|---|
| In re Application of | : | |
| Gupta et al. | : | |
| Application Number: 13/006,338 | : | ON PETITION |
| Deposited: 01/13/2011 | : | |
| Attorney Docket Number: 21883-4 | : | |
| | : | |

This is a decision in response to the PETITION UNDER 37 C.F.R. § 1.57(a), filed on May 17, 2011, requesting that the application be accorded a filing date. This petition is being treated pursuant to 37 CFR 1.53(e)(2)[1].

Application papers in the above-identified application were deposited on January 13, 2011. However, on April 25, 2011, the Office of Patent Application Processing mailed applicants a "Notice of Incomplete Nonprovisional Application," notifying applicants that the application papers had not been accorded a filing date because the application was deposited without drawings. Application fees were also due.

In response, applicants timely filed this petition. Applicants petition the Director for a filing date of January 13, 2011, under 37 CFR 1.57(a). Applicants request that the application be amended

[1] Any request for review of a notification pursuant to paragraph (e)(1) of this section, or a notification that the original application papers lack a portion of the specification or drawing(s), must be by way of a petition pursuant to this paragraph accompanied by the fee set forth in § 1.17(f). In the absence of a timely (§ 1.181(f)) petition pursuant to this paragraph, the filing date of an application in which the applicant was notified of a filing error pursuant to paragraph (e)(1) of this section will be the date the filing error is corrected.

to include the inadvertently omitted drawings on the basis that the application as filed contained a prior benefit claim under 37 CFR 1.55 or 1.78.

Petitioner's arguments and evidence have been considered. However, a review of the application confirms that, as filed, the application contained at least one method claim and one process claim and at least one composition claim. MPEP 601.01(f) provides that:

> It has been USPTO practice to treat an application that contains at least one process or method claim as an application for which a drawing is not necessary for an understanding of the invention under 35 U.S.C. 113 (first sentence). The same practice has been followed in composition applications.

Thus, pursuant to § 601.01(f), a drawing is not considered essential for a filing date. The instant application is entitled to a filing date without drawings present in the application.

Accordingly, the Office should have granted the application a filing date and mailed a Notice of Omitted Items instead of a Notice of Incomplete Nonprovisional Application. As stated in MPEP 601.01(g) under the section entitled, "Application Entitled to a Filing Date," applicant may submit an amendment to include the inadvertently omitted portion of the drawing(s) pursuant to 37 CFR 1.57(a):

> [i]f an application was filed on or after September 21, 2004, and contains a claim under 37 CFR 1.55 for priority of a prior-filed foreign application, or a claim under 37 CFR 1.78 for the benefit of a prior-filed provisional, nonprovisional, or international application that was present on the filing date of the application, and the omitted portion of the drawing(s) was inadvertently omitted from the application and is completely contained in the prior-filed application[.]

Please note that no petition is required and that the amendment must comply with 37 CFR 1.57(a) and 37 CFR 1.121. See MPEP § 201.17. Receipt of the preliminary amendment to enter the inadvertently omitted drawings is acknowledged. The amendment to include the inadvertently omitted drawing(s) will be considered by the examiner

To the extent the instant petition requests a filing date of January 13, 2011, with no drawings present in the application, the petition is **GRANTED**.

Given the basis for granting this petition, the petition fee is being refunded.

Pursuant to this decision, the application will be referred to Office of Patent Application Processing for:

- **correction of the filing date to January 13, 2011**;

- **for indication in Office records, as appropriate, that "0" sheets of drawings were present on filing** and
- **for issuance of a filing receipt.**

Telephone inquiries concerning this matter may be directed to Senior Petitions Attorney Douglas I. Wood at (571) 272-3231.

Christopher Bottorff
Petitions Examiner
Office of Petitions

UNITED STATES PATENT AND TRADEMARK OFFICE

Commissioner for Patents
United States Patent and Trademark Office
P.O. Box 1450
Alexandria, VA 22313-1450
www.uspto.gov

Decision Date : February 13, 2012

In re Application of :

Yuan-Chang Su

Application No : 13006340

Filed : 13-Jan-2011

Attorney Docket No : ASEG-045/01US 307632-2071

DECISION ON REQUEST TO WITHDRAW AS ATTORNEY/AGENTOF RECORD

This is an electronic decision on the Request to Withdraw as attorney or agent of record under 37 CFR § 1.36(b), filed February 13, 2012

The request is **APPROVED.**

The request was signed by William S. Galliani (registration no. 33885 ) on behalf of all attorneys/agents associated with Customer Number 58249 . All attorneys/agents associated with Cusotmer Number 58249 have been withdrawn.

Since there are no remaining attorneys of record, all future communications from the Office will be directed to the first named inventor or assignee that has properly made itself of record pursuant to 37 CFR 3.71, with correspondence address:

| | |
|---|---|
| Name | Advanced Semiconductor Engineering, Inc. |
| Name2 | c/o Foley & Lardner |
| Address 1 | 975 Page Mill Road |
| Address 2 | |
| City | Palo Alto |
| State | CA |
| Postal Code | 94304 |
| Country | US |

As a reminder, requester is required to inform the first named inventor or assignee that has properly made itself of record pursuant to 37 CFR 3.71 of the electronically processed petition.

Telephone inquiries concerning this decision should be directed to the Patent Electronic Business Center (EBC) at 866-217-9197.

Office of Petitions

| | |
|---|---|
| **Doc Code: PET.AUTO**<br>**Document Description: Petition automatically granted by EFS-Web** | PTO/SB/83<br>U.S. Patent and Trademark Office<br>Department of Commerce |

| | |
|---|---|
| Electronic Petition Request | **REQUEST FOR WITHDRAWAL AS ATTORNEY OR AGENT AND CHANGE OF CORRESPONDENCE ADDRESS** |
| Application Number | 13006340 |
| Filing Date | 13-Jan-2011 |
| First Named Inventor | Yuan-Chang Su |
| Art Unit | 2811 |
| Examiner Name | LYNNE GURLEY |
| Attorney Docket Number | ASEG-045/01US 307632-2071 |
| Title | Semiconductor Package with Single Sided Substrate Design and Manufacturing Methods Thereof |

◉ Please withdraw me as attorney or agent for the above identified patent application and the practitioners of record associated with Customer Number: 58249

The reason(s) for this request are those described in 37 CFR:

10.40(b)(4)

Certifications

☒ I/We have given reasonable notice to the client, prior to the expiration of the response period, that the practitioner(s) intend to withdraw from employment

☒ I/We have delivered to the client or a duly authorized representative of the client all papers and property (including funds) to which the client is entitled

☒ I/We have notified the client of any responses that may be due and the time frame within which the client must respond

Change the correspondence address and direct all future correspondence to the first named inventor or assignee that has properly made itself of record pursuant to 37 CFR 3.71:

| | |
|---|---|
| Name | Advanced Semiconductor Engineering, Inc. c/o Foley & Lardner |
| Address | 975 Page Mill Road |
| City | Palo Alto |
| State | CA |
| Postal Code | 94304 |
| Country | US |

| I am authorized to sign on behalf of myself and all withdrawing practitioners. | |
|---|---|
| Signature | /William S. Galliani/ |
| Name | William S. Galliani |
| Registration Number | 33885 |

UNITED STATES PATENT AND TRADEMARK OFFICE

Commissioner for Patents
United States Patent and Trademark Office
P.O. Box 1450
Alexandria, VA 22313-1450
www.uspto.gov

MORRISON & FOERSTER, LLP
555 WEST FIFTH STREET
SUITE 3500
LOS ANGELES, CA 90013-1024

MAILED

JAN 04 2012

OFFICE OF PETITIONS

In re Application of
Ichiro Kitamura, et. al.
Application No. 13/006,352
Filed: January 13, 2011
Attorney Docket No. 285032008901

DECISION ON PETITION
TO WITHDRAW FROM
RECORD

This is a decision on the Request to Withdraw as attorney or agent of record under 37 CFR §§ 1.36(b) or 37 CFR 10.40, filed November 23, 2011.

The request is **APPROVED**.

The request was signed by Mehran Arjomand on behalf of himself and all the attorneys/agents associated with Customer Number 25224. Therefore, Mehran Arjomand and all the attorneys/agents associated with Customer Number 25224 have been withdrawn.

Applicant is reminded that there are no attorneys/agents of record at this time.

All future communications from the Office will be directed to the address listed below until otherwise properly notified by the applicant.

Telephone inquiries concerning this decision should be directed to the undersigned at (571) 272-3226.

Andrea Smith
Petitions Examiner
Office of Petitions

cc: Cataler Corporation
7800, Chihama
Kakegawa-Shi, Shizuoka 437-1492
**JAPAN**

UNITED STATES PATENT AND TRADEMARK OFFICE

UNITED STATES DEPARTMENT OF COMMERCE
United States Patent and Trademark Office
Address: COMMISSIONER FOR PATENTS
P.O. Box 1450
Alexandria, Virginia 22313-1450
www.uspto.gov

| APPLICATION NUMBER | FILING OR 371(C) DATE | FIRST NAMED APPLICANT | ATTY. DOCKET NO./TITLE |
|---|---|---|---|
| 13/006,352 | 01/13/2011 | Ichiro KITAMURA | 285032008901 |

**CONFIRMATION NO. 4324**

**POWER OF ATTORNEY NOTICE**

25224
MORRISON & FOERSTER, LLP
555 WEST FIFTH STREET
SUITE 3500
LOS ANGELES, CA 90013-1024

Date Mailed: 12/20/2011

## NOTICE REGARDING CHANGE OF POWER OF ATTORNEY

This is in response to the Power of Attorney filed 11/23/2011.

- The withdrawal as attorney in this application has been accepted. Future correspondence will be mailed to the new address of record. 37 CFR 1.33.

/amsmith/

Office of Data Management, Application Assistance Unit (571) 272-4000, or (571) 272-4200, or 1-888-786-0101

**Doc Code: PPH.PCT.652**
**Document Description: Petition to make special under PCT-Patent Pros Hwy**

PTO/SB/20PCT-EP (05-10)
Approved for use through 01/31/2012. OMB 0651-0058
U.S. Patent and Trademark Office; U. S. DEPARTMENT OF COMMERCE
Under the Paperwork Reduction Act of 1995, no persons are required to respond to a collection of information unless it displays a valid OMB control number.

# REQUEST FOR PARTICIPATION IN THE PATENT COOPERATION TREATY - PATENT PROSECUTION HIGHWAY (PCT-PPH) PILOT PROGRAM BETWEEN THE EUROPEAN PATENT OFFICE (EPO) AND THE USPTO

| | | | |
|---|---|---|---|
| Application No: | 13/006357 | Filing date: | 13 January 2011 |
| First Named Inventor: | Udo TULLMANN | | |
| Title of the Invention: | CARRIER DEVICE FOR MACHINE TOOLS | | |

**THIS REQUEST FOR PARTICIPATION IN THE PCT-PPH PILOT PROGRAM ALONG WITH THE REQUIRED DOCUMENTS MUST BE SUBMITTED VIA EFS-WEB. INFORMATION REGARDING EFS-WEB IS AVAILABLE AT HTTP://WWW.USPTO.GOV/EBC/EFS_HELP.HTML**

**APPLICANT HEREBY REQUESTS PARTICIPATION IN THE PCT-PPH PROGRAM AND PETITIONS TO MAKE THE ABOVE-IDENTIFIED APPLICATION SPECIAL UNDER THE PCT-PPH PROGRAM.**

The above-identified application is (1) a national stage entry of the corresponding PCT application, or (2) a national stage entry of another PCT application which claims priority to the corresponding PCT application, or (3) a national application that claims domestic/ foreign priority to the corresponding PCT application, or (4) a national application which forms the basis for the priority claim in the corresponding PCT application, or (5) a continuing application of a U.S. application that satisfies one of (1) to (4) above, or (6) a U.S. application that claims domestic benefit to a U.S. provisional application which forms the basis for the priority claim in the corresponding PCT application.

**The corresponding PCT application number(s) is/are:** PCT/EP2009/004988

**The international filing date of the corresponding PCT application(s) is/are:** 9 July 2009

**I. List of Required Documents:**

a. **A copy of the latest international work product (WO/ISA, WO/IPEA, or IPER) in the above–identified corresponding PCT application(s)**

☐ Is attached

☒ Is not attached because the document is already in the U.S. application.

b. **A copy of all claims which were indicated as having novelty, inventive step and industrial applicability in the above-identified corresponding PCT application(s).**

☒ Is attached.

☐ Is not attached because the document is already in the U.S. application.

c. **English translations of the documents in a. and b. above are attached (if the documents are not in the English language). A statement that the English translation is accurate is attached for the document in b. above.**



This collection of information is required by 35 U.S.C. 119, 37 CFR 1.55, and 37 CFR 1.102(d). The information is required to obtain or retain a benefit by the public, which is to file (and by the USPTO to process) an application. Confidentiality is governed by 35 U.S.C. 122 and 37 CFR 1.11 and 1.14. This collection is estimated to take 2 hours to complete, including gathering, preparing, and submitting the completed application form to the USPTO. Time will vary depending upon the individual case. Any comments on the amount of time you require to complete this form and/or suggestions for reducing this burden should be sent to the Chief Information Officer, U.S. Patent and Trademark Office, U.S. Department of Commerce, P.O. Box 1450, Alexandria, VA 22313-1450. DO NOT SEND FEES OR COMPLETED FORMS TO THIS ADDRESS.

PTO/SB/20PCT-EP (05-10)
Approved for use through 01/31/2012. OMB 0651-0058
U.S.Patent and Trademark Office; U.S. DEPARTMENT OF COMMERCE
Under the Paperwork Reduction Act of 1995, no persons are required to respond to a collection of information unless it displays a valid OMB control number.

# REQUEST FOR PARTICIPATION IN THE PCT-PPH PILOT PROGRAM BETWEEN THE EPO AND THE USPTO

(continued)

| | |
|---|---|
| Application No.: | 13/006357 |
| First Named Inventor: | Udo TULLMANN |

d. **(1) An information disclosure statement listing the documents cited in the international work products (ISR, WO/ISA, WO/IPEA, IPER) of the corresponding PCT application.**

☐ Is attached

☒ Has already been filed in the above-identified U.S. application on 7 April 2011

**(2) Copies of all documents (except) for U.S. patents or U.S. patent application publications)**

☐ Are attached.

☒ Have already been filed in the above-identified U.S. application on 7 April 2011

**II. Claims Correspondence Table:**

| Claims in US Application | Patentable Claims in the corresponding PCT Application | Explanation regarding the correspondence |
|---|---|---|
| 1 | 1 | Claim 1 in the US appln. includes all the limitations of PCT Claim claim 1 |
| 2 | 2 | Claim 2 in the US appln. includes all the limitations of PCT Claim claim 2 |
| 4 | 3 | Direct correspondence |
| 5 | 4 | Direct correspondence |
| 6 | 5 | Direct correspondence |
| 7 | 6 | Claim 7 in US appln. includes all the limitations of PCT claim 6 |
| 8 | 7 | Claim 8 in US appln. includes all the limitations of PCT claim 7 |
| 9 | 8 | Direct correspondence |
| 10 | 9 | Claim 10 in US appln. includes all the limitations of PCT claim 9 |
| 11 | 10 | Direct correspondence |
| 12 | 11 | Direct correspondence |
| 13 | 12 | Direct correspondence |
| 14 | 13 | Direct correspondence |
| 15 | 14 | Direct correspondence |
| 16 | 15 | Direct correspondence |
| | | |
| | | |
| | | |
| | | |

**III. All the claims in the US application sufficiently correspond to the patentable claims in the corresponding PCT application.**

| | |
|---|---|
| Signature /Lawrence A. Maxham/ | Date 19 September 2011 |
| Name (Print/Typed) Lawrence A. Maxham | Registration Number 24483 |

# Privacy Act Statement

The **Privacy Act of 1974 (P.L. 93-579)** requires that you be given certain information in connection with your submission of the attached form related to a patent application or patent. Accordingly, pursuant to the requirements of the Act, please be advised that: (1) the general authority for the collection of this information is 35 U.S.C. 2(b)(2); (2) furnishing of the information solicited is voluntary; and (3) the principal purpose for which the information is used by the U.S. Patent and Trademark Office is to process and/or examine your submission related to a patent application or patent. If you do not furnish the requested information, the U.S. Patent and Trademark Office may not be able to process and/or examine your submission, which may result in termination of proceedings or abandonment of the application or expiration of the patent.

The information provided by you in this form will be subject to the following routine uses:

1. The information on this form will be treated confidentially to the extent allowed under the Freedom of Information Act (5 U.S.C. 552) and the Privacy Act (5 U.S.C 552a). Records from this system of records may be disclosed to the Department of Justice to determine whether disclosure of these records is required by the Freedom of Information Act.
2. A record from this system of records may be disclosed, as a routine use, in the course of presenting evidence to a court, magistrate, or administrative tribunal, including disclosures to opposing counsel in the course of settlement negotiations.
3. A record in this system of records may be disclosed, as a routine use, to a Member of Congress submitting a request involving an individual, to whom the record pertains, when the individual has requested assistance from the Member with respect to the subject matter of the record.
4. A record in this system of records may be disclosed, as a routine use, to a contractor of the Agency having need for the information in order to perform a contract. Recipients of information shall be required to comply with the requirements of the Privacy Act of 1974, as amended, pursuant to 5 U.S.C. 552a(m).
5. A record related to an International Application filed under the Patent Cooperation Treaty in this system of records may be disclosed, as a routine use, to the International Bureau of the World Intellectual Property Organization, pursuant to the Patent Cooperation Treaty.
6. A record in this system of records may be disclosed, as a routine use, to another federal agency for purposes of National Security review (35 U.S.C. 181) and for review pursuant to the Atomic Energy Act (42 U.S.C. 218(c)).
7. A record from this system of records may be disclosed, as a routine use, to the Administrator, General Services, or his/her designee, during an inspection of records conducted by GSA as part of that agency's responsibility to recommend improvements in records management practices and programs, under authority of 44 U.S.C. 2904 and 2906. Such disclosure shall be made in accordance with the GSA regulations governing inspection of records for this purpose, and any other relevant ( *i.e.*, GSA or Commerce) directive. Such disclosure shall not be used to make determinations about individuals.
8. A record from this system of records may be disclosed, as a routine use, to the public after either publication of the application pursuant to 35 U.S.C. 122(b) or issuance of a patent pursuant to 35 U.S.C. 151. Further, a record may be disclosed, subject to the limitations of 37 CFR 1.14, as a routine use, to the public if the record was filed in an application which became abandoned or in which the proceedings were terminated and which application is referenced by either a published application, an application open to public inspection or an issued patent.
9. A record from this system of records may be disclosed, as a routine use, to a Federal, State, or local law enforcement agency, if the USPTO becomes aware of a violation or potential violation of law or regulation.

UNITED STATES PATENT AND TRADEMARK OFFICE

UNITED STATES DEPARTMENT OF COMMERCE
United States Patent and Trademark Office
Address: COMMISSIONER FOR PATENTS
P.O. Box 1450
Alexandria, Virginia 22313-1450
www.uspto.gov

| APPLICATION NO. | FILING DATE | FIRST NAMED INVENTOR | ATTORNEY DOCKET NO. | CONFIRMATION NO. |
|---|---|---|---|---|
| 13/006,357 | 01/13/2011 | Udo TÜLLMANN | 250-159 | 4336 |

616 7590 09/29/2011

THE MAXHAM FIRM
9330 SCRANTON ROAD, SUITE 350
SAN DIEGO, CA 92121

| EXAMINER | |
|---|---|
| ART UNIT | PAPER NUMBER |
| 3726 | |

| MAIL DATE | DELIVERY MODE |
|---|---|
| 09/29/2011 | PAPER |

**Please find below and/or attached an Office communication concerning this application or proceeding.**

The time period for reply, if any, is set in the attached communication.

UNITED STATES PATENT AND TRADEMARK OFFICE

Commissioner for Patents
United States Patent and Trademark Office
P.O. Box 1450
Alexandria, VA 22313-1450
www.uspto.gov

THE MAXHAM FIRM
9330 SCRANTON ROAD, SUITE 350
SAN DIEGO CA 92121

| | | |
|---|---|---|
| In re Application of | : | |
| TULLMANN, UDO | : | DECISION ON REQUEST TO |
| Application No. 13/006,357 | : | PARTICIPATE IN PATENT |
| Filed: January 13, 2011 | : | PCT/PROSECUTION HIGHWAY |
| Attorney Docket No. 250-159 | : | PROGRAM AND PETITION |
| For: CARRIER DEVICE FOR MACHINE TOOLS | : | TO MAKE SPECIAL UNDER 37 CFR 1.102(a) |

This is a decision on the request to participate in the Patent Prosecution Highway (PPH) program and the petition under 37 CFR 1.102(a), filed September 20, 2011 to make the above-identified application special.

The request and petition are granted.

A grantable request to participate in the PPH pilot program and petition to make special require:

(1) The U.S. application must validly claim priority under 35 U.S.C. 119(a) to one or more applications filed in the JPO;
(2) Applicant must submit a copy of the allowable/patentable claim(s) from the JPO/PCT application(s) along with an English translation thereof and a statement that the English translation is accurate;
(3) All the claims in the U.S. application must sufficiently correspond or be amended to sufficiently correspond to the allowable/patentable claim(s) in the JPO application(s);
(4) Examination of the U.S. application has not begun;
(5) Applicant must submit a copy of all the office actions from each of the JPO/PCT application(s) containing the allowable/patentable claim(s) along with an English translation thereof and a statement that the English translation is accurate; and
(6) Applicant must submit an IDS listing the documents cited by the JPO examiner in the JPO office action along with copies of documents except U.S. patents or U.S. patent application publications.
In light of the petition being properly submitted, the request to participate in the PPH program and the petition comply with the above requirements. Accordingly, the above-identified application has been accorded "special" status.

The applicant is encouraged to cite and submit all relevant prior art references, if any, to facilitate examination in this application. Upon completion of pre-examination processing, this application will be forwarded to an examiner for examination.

Telephone inquiries concerning this decision should be directed to Henry C. Yuen at 571-272-4485. All other inquiries concerning the examination or status of the application should be directed to David Bryant, SPE of Art Unit 3726, and 571-272-4526 for Class 279 and also accessible in the PAIR system at http://www.uspto.gov/ebc.index.html.

Petition is **granted**.

/Henry C. Yuen/

_____

Henry C. Yuen, Special Programs Examiner
Technology Center 3700 – Mechanical Engineering,
Manufacturing and Products
571-272-4856

UNITED STATES PATENT AND TRADEMARK OFFICE

Commissioner for Patents
United States Patent and Trademark Office
P.O. Box 1450
Alexandria, VA 22313-1450
www.uspto.gov

Paper No.

WILSON, SONSINI, GOODRICH & ROSATI
650 PAGE MILL ROAD
PALO ALTO CA 94304-1050

MAILED

MAY 09 2011

OFFICE OF PETITIONS

| | | |
|---|---|---|
| In re Application No. | : | |
| Miao et al. | : | |
| Application No. 13/006,361 | : | LETTER REGARDING |
| Filed: January 13, 2011 | : | FEE DEFICIENCY PAYMENT |
| Atty Docket No. 31362-701.405 | : | |

This is in response to the letter notifying the Office of loss of entitlement to small entity status filed March 7, 2011, pursuant to 37 C.F.R. §1.28(C).

The Office no longer investigates or rejects original or reissue applications under 37 CFR 1.56. 1098 Off. Gaz. Pat. Office 502 (January 3, 1989). Therefore, nothing in this Notice is intended to imply that an investigation was done.

This letter includes an itemization of the fee deficiencies and payment as required by 37 CFR 1.28(c)(2)(ii).

Your notification of a loss of entitlement to small entity status is made of record and your fee deficiency submission under 37 CFR 1.28 is hereby **ACCEPTED**.

Telephone inquiries related to this decision should be directed to the undersigned at 571-272-3219.

Nancy Johnson
Senior Petitions Attorney
Office of Petitions

UNITED STATES PATENT AND TRADEMARK OFFICE

Commissioner for Patents
United States Patent and Trademark Office
P.O. Box 1450
Alexandria, VA 22313-1450
www.uspto.gov

JAMES C. EAVES JR
GREENEBAUM DOLL & MCDONALD PLLC
3500 NATIONAL CITY TOWER
101 SOUTH FIFTH STREET
LOUISVILLE, KY 40202

**MAILED**

NOV 14 2011

OFFICE OF PETITIONS

In re Application of :
Charles Russell Justice :
Application No. 13/006,421 : DECISION ON PETITION
Filed: January 13, 2011 : TO WITHDRAW
Attorney Docket No. **Jigsaw2** : FROM RECORD
:

This is a decision on the Request to Withdraw as attorney or agent of record under 37 CFR § 1.36(b), filed October 24, 2011.

The request is **NOT APPROVED**.

The request cannot be approved because the requested change in the correspondence address is improper.

The Office will only accept correspondence address changes to the most current address information provided for the assignee of the entire interest *who properly became of record under 37 CFR 3.71,* or, if no assignee of the entire interest has properly been made of record, the most current address information provided for the first named inventor. 37 CFR 3.71(c) states:

> ***An assignee becomes of record either in a national patent application or a reexamination proceeding by filing a statement in compliance with § 3.73(b) that is signed by a party who is authorized to act on behalf of the assignee.***

Therefore, as there is currently no Statement under 37 CFR 3.73(b) with the current assignee information of record in the instant application, the Office cannot change the correspondence address to the address on the Request to Withdraw at this present time.

All future communications from the Office will continue to be directed to the above-listed address until otherwise notified by applicant.

Telephone inquires concerning this decision should be directed to Irvin Dingle at (571) 272-3210.

Irvin Dingle
Petitions Examiner
Office of Petitions

UNITED STATES PATENT AND TRADEMARK OFFICE

Commissioner for Patents
United States Patent and Trademark Office
P.O. Box 1450
Alexandria, VA 22313-1450
www.uspto.gov

THE MATTHEWS FIRM
2000 BERING DRIVE
SUITE 700
HOUSTON, TX 77057

MAILED
FEB 21 2012
OFFICE OF PETITIONS

In re Application of :
Nikki Alexis Foreman, et al. :
Application No. 13/006,528 : DECISION ON PETITION
Filed: January 14, 2011 : TO WITHDRAW
Attorney Docket No. BBG-001 : FROM RECORD
:

This is a decision on the Request to Withdraw as attorney or agent of record under 37 C.F.R. § 1.36(b), filed November 18, 2011.

The request is **NOT APPROVED**.

A grantable request to withdraw as attorney/agent of record must be signed by every attorney/agent seeking to withdraw or contain a clear indication that one attorney is signing on behalf of another/others.

Petitioner should also note that the Office will no longer accept address changes to a new practitioner of a law firm file with a Request to Withdraw, absent the filing of a power of attorney to the new representative. The Office will either change the correspondence address of record to the most current address information provided for the assignee of the entire interest who properly became of record under 37 CFR 3.71 or, the most current address information provided for the first named inventor.

Accordingly, the request to withdraw from record does not include an acceptable current correspondence address for future communications from the Office.

All future communications from the Office will continue to be directed to the above-listed address until otherwise notified by applicant.

Telephone inquiries concerning this decision should be directed to undersigned at 571-272-1642.

All other inquiries concerning the examination or status of this application should be directed to the technology Center.

/AMW/
April M. Wise
Petitions Examiner
Office of Petitions

cc: PAMELA R. NELSON
4514 MAPLE STREET
BELLAIRE, TX 77401

UNITED STATES PATENT AND TRADEMARK OFFICE

Commissioner for Patents
United States Patent and Trademark Office
P.O. Box 1450
Alexandria, VA 22313-1450
www.uspto.gov

THE MATTHEWS FIRM
2000 BERING DRIVE
SUITE 700
HOUSTON, TX 77057

**MAILED**

MAR 26 2012

**OFFICE OF PETITIONS**

In re Application of
Nikki Alexis Foreman, et al.
Application No. 13/006,528
Filed: January 14, 2011
Attorney Docket No. BBG-001

DECISION ON PETITION
TO WITHDRAW
FROM RECORD

This is a decision on the renewed Request to Withdraw as attorney or agent of record under 37 C.F.R. § 1.36(b), filed March 2, 2012.

The request is **APPROVED**.

A grantable request to withdraw as attorney/agent of record must be signed by every attorney/agent seeking to withdraw or contain a clear indication that one attorney is signing on behalf of another/others.

The request was signed by Terry L. McCutcheon on behalf of all attorneys of record who are associated with customer No. 21897. All attorneys/agents associated with the Customer Number 21897 have been withdrawn. Applicant is reminded that there is no attorney of record at this time.

The correspondence address of record has been changed and the new correspondence address is the address indicated below.

There are no pending Office actions at the present time.

Telephone inquiries concerning this decision should be directed to undersigned at 571-272-1642. All other inquiries concerning the examination or status of this application should be directed to the Technology Center.

/AMW/
April M. Wise
Petitions Examiner
Office of Petitions

cc: NIKKI A. FOREMAN
C/O PAMELA R. NELSON
4514 MAPLE STREET
BELLAIRE, TX 77401

UNITED STATES PATENT AND TRADEMARK OFFICE

UNITED STATES DEPARTMENT OF COMMERCE
United States Patent and Trademark Office
Address: COMMISSIONER FOR PATENTS
P.O. Box 1450
Alexandria, Virginia 22313-1450
www.uspto.gov

| APPLICATION NUMBER | FILING OR 371(C) DATE | FIRST NAMED APPLICANT | ATTY. DOCKET NO./TITLE |
|---|---|---|---|
| 13/006,528 | 01/14/2011 | Nikki Alexis Foreman | BBG-001 |

**CONFIRMATION NO. 4711**

**POWER OF ATTORNEY NOTICE**

21897
THE MATTHEWS FIRM
2000 BERING DRIVE
SUITE 700
HOUSTON, TX 77057

Date Mailed: 03/16/2012

## NOTICE REGARDING CHANGE OF POWER OF ATTORNEY

This is in response to the Power of Attorney filed 03/02/2012.

- The withdrawal as attorney in this application has been accepted. Future correspondence will be mailed to the new address of record. 37 CFR 1.33.

/amwise/

Office of Data Management, Application Assistance Unit (571) 272-4000, or (571) 272-4200, or 1-888-786-0101

**Doc Code: PET.GREEN**
**Document Description: Petition for Green Tech Pilot**

PTO/SB/420 (03-11)

## PETITION TO MAKE SPECIAL UNDER THE GREEN TECHNOLOGY PILOT PROGRAM

| Attorney Docket Number: | HI-0607 | Application Number (if known): | 12/904,441 | Filing date: | January 14, 2011 |
|---|---|---|---|---|---|

First Named Inventor: Jun Seok PARK

Title: LIGHT EMITTING MODULE, BACKLIGHT UNIT, AND DISPLAY APPARATUS

**APPLICANT HEREBY REQUESTS TO PARTICIPATE IN THE GREEN TECHNOLOGY PILOT PROGRAM FOR THE ABOVE-IDENTIFIED APPLICATION. See Instruction Sheet on page 2.**

This petition must be timely filed electronically using the USPTO electronic filing system, EFS-Web.

1. By filing this petition:

   **Applicant is requesting early publication: Applicant hereby requests early publication under 37 CFR 1.219 and the publication fee set forth in 37 CFR 1.18(d) accompanies this request.**

2. By filing this petition: applicant is agreeing to make an election without traverse in a telephonic interview and elect an invention that meets the eligibility requirements for the Green Technology Pilot Program, if the Office determines that the claims are not obviously directed to a single invention. See Instruction Sheet.

3. This request is accompanied by statements of special status for the eligibility requirement.

4. The application contains no more than three (3) independent claims and twenty (20) total claims.

5. The application does not contain any multiple dependent claims.

6. Other attachments: _____

| Signature | | Date | May 18, 2011 |
|---|---|---|---|
| Name (Print/Typed) | Daniel Y.J. Kim | Registration Number | 36,168 |

***Note:*** *Signatures of all the inventors or assignees of record of the entire interest or their representative(s) are required in accordance with 37 CFR 1.33 and 11.18. Please see 37 CFR 1.4(d) for the form of the signature. If necessary, submit multiple forms for more than one signature, see below*.*

■ *Total of 2 forms are submitted.

*If you need assistance in completing the form, call 1-800-PTO-9199 and select option 2.*

Docket No.: **HI-0607** PATENT

**IN THE UNITED STATES PATENT AND TRADEMARK OFFICE**

| | | | |
|---|---|---|---|
| In re Application of | | Confirmation No.: | **4841** |
| **Jun Seok PARK** | | Group Art Unit: | **2875** |
| Serial No.: | **13/006,594** | Examiner: | **To Be Assigned** |
| Filed: | **January 14, 2011** | Customer No.: | **34610** |

For: **LIGHT EMITTING MODULE, BACKLIGHT UNIT, AND DISPLAY APPARATUS**

**STATEMENT OF SPECIAL STATUS FOR ELIGIBILITY UNDER THE GREEN TECHNOLOGY PILOT PROGRAM**

U.S. Patent and Trademark Office
Customer Service Window, **MAIL STOP PETITIONS**
Randolph Building
401 Dulany Street
Alexandria, Virginia 22314

Sir:

Special status is sought under 37 CFR §1.102 because the invention materially contributes to the more efficient utilization and conservation of energy resources.

Respectfully submitted,
KED & ASSOCIATES, LLP

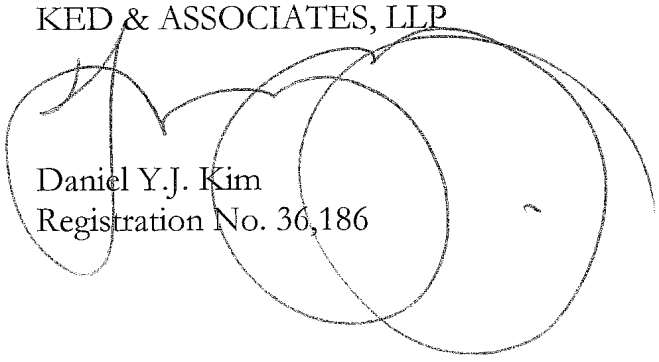

Daniel Y.J. Kim
Registration No. 36,186

Correspondence Address:
P.O. Box 8638
Reston, VA 20195
703 766-3777 DYK/dak
**Date: May 18, 2011**
**Please direct all correspondence to Customer Number 34610**
Q:\Documents\2019-1166\280393

UNITED STATES PATENT AND TRADEMARK OFFICE

UNITED STATES DEPARTMENT OF COMMERCE
United States Patent and Trademark Office
Address: COMMISSIONER FOR PATENTS
P.O. Box 1450
Alexandria, Virginia 22313-1450
www.uspto.gov

| APPLICATION NO. | FILING DATE | FIRST NAMED INVENTOR | ATTORNEY DOCKET NO. | CONFIRMATION NO. |
|---|---|---|---|---|
| 13/006,594 | 01/14/2011 | Jun Seok PARK | HI-0607 | 4841 |

34610 7590 05/25/2011

KED & ASSOCIATES, LLP
P.O. Box 8638
Reston, VA 20195

| EXAMINER | |
|---|---|
| ART UNIT | PAPER NUMBER |
| 2875 | |

| MAIL DATE | DELIVERY MODE |
|---|---|
| 05/25/2011 | PAPER |

**Please find below and/or attached an Office communication concerning this application or proceeding.**

The time period for reply, if any, is set in the attached communication.

UNITED STATES PATENT AND TRADEMARK OFFICE

Commissioner for Patents
United States Patent and Trademark Office
P.O. Box 1450
Alexandria, VA 22313-1450
www.uspto.gov

KED & ASSOCIATES, LLP
P.O. Box 8638
Reston VA 20195

| | | |
|---|---|---|
| In re Application of | : | |
| Jun Seok PARK | : | DECISION ON PETITION |
| Application No. 13/006,594 | : | TO MAKE SPECIAL UNDER |
| Filed: February 22, 2011 | : | THE GREEN TECHNOLOGY |
| Attorney Docket No. HI-0607 | : | PILOT PROGRAM |

This is a decision on the petition under 37 CFR 1.102, filed on May 18, 2011, to make the above-identified application special under the pilot program for applications pertaining to Green Technologies as set forth 74 Federal Register Notice 64666 (December 8, 2009) and amended by 75 Federal Register Notice 28554 (May 21, 2010) and 75 Federal Register Notice 69049 (November 10, 2010).

The petition is **GRANTED**.

A grantable petition to make an application special under 37 CFR 1.102 and the pilot program as set forth in 74 FR 64666 must be directed to a nonprovisional application filed under 35 USC 111(a) or be a national stage entry under 35 USC 371, exclusive of any reissue applications.

In order to qualify for special status, the following requirements must be met. 1) The application must have no more than 3 independent claims and no more than 20 total claims. 2) The application must not contain any multiple dependent claims. 3) The petition must state the basis for seeking special status, i.e., the claimed invention either: A) materially enhances the quality of the environment or B) materially contributes to: i) the discovery or development of renewable energy resources, ii) the more efficient utilization and conservation of energy resources, or iii) greenhouse gas emission reduction. 4) If the disclosure is not clear on its face that the claimed invention materially contributes under category (A) or (B), the petition must be accompanied by a statement by the applicant, assignee, or an attorney/agent registered to practice before the Office explaining how the materiality standard is met. 5) A statement that applicant will agree to make an election without traverse in a telephonic interview if a restriction requirement is made by the examiner. 6) The petition to make special must be filed electronically. 7) The petition must be filed at least one day prior to the date that a first Office Action appears in the Patent Application Information Retrieval (PAIR) system. 8) The petition must be accompanied by a request for early publication in compliance with 37 CFR 1.219 and include the publication fee as set forth in 37 CFR 1.18(d).

The requirement for a fee for consideration of the petition to make special for applications pertaining to Green Technologies has been waived.

The instant petition complies with items 1 – 8 above. Accordingly, the above-identified application has been accorded "special" status.

Telephone inquires concerning this decision should be directed to Lee W. Young at 571-272-4549.

The application is being forwarded to the Technology Center Art Unit 2875 for action on the merits commensurate with this decision.

Lee W. Young
Quality Assurance Specialist
Technology Center 2800

UNITED STATES PATENT AND TRADEMARK OFFICE

Commissioner for Patents
United States Patent and Trademark Office
P.O. Box 1450
Alexandria, VA 22313-1450
www.uspto.gov

K&L Gates LLP
IP Docketing
630 HANSEN WAY
PALO ALTO CA 94304

MAILED

JUN 09 2011

OFFICE OF PETITIONS

In re Application of :
Nakasato et al. : DECISION REFUSING STATUS
Application No. 13/006,596 : UNDER 37 CFR 1.47(a)
Filed: January 14, 2011 :
Attorney Docket No. SOPINC-008US :

This is in response to the petition under 37 CFR 1.47(a), filed April 28, 2011.

The petition is dismissed.

Rule 47 applicant is given TWO MONTHS from the mailing date of this decision to reply, correcting the below-noted deficiencies. Any reply should be entitled "Request for Reconsideration of Petition Under 37 CFR 1.47(a)," and should only address the deficiencies noted below, except that the reply may include an oath or declaration executed by the non-signing inventor. **FAILURE TO RESPOND WILL RESULT IN ABANDONMENT OF THE APPLICATION.** Any extensions of time will be governed by 37 CFR 1.136(a).

A grantable petition under 37 CFR 1.47(a) requires: (1) proof that the non-signing inventor cannot be reached or refuses to sign the oath or declaration after having been presented with the application papers (specification, claims and drawings); (2) an acceptable oath or declaration in compliance with 35 U.S.C. §§ 115 and 116; (3) the petition fee; and (4) a statement of the last known address of the non-signing inventor. Applicant lacks item(s) (2) set forth above.

As to item (2), the signature block of inventor Forester contains non-initialed alterations to the declaration. A newly executed declaration without alterations should be provided. Any changes made in ink in the application or oath prior to signing should be initialed and dated by the applicants prior to execution of the oath or declaration. The Office will not consider whether noninitialed and/or nondated alterations were made before or after signing of the oath or declaration but will require a new oath or declaration. See MPEP 605.04(a).

Further, a review of the declaration shows that Pamela Ann Joe, a VP of Sopogy, Inc has improperly executed the declaration on behalf of non-signing inventor Nakasato. 37 CFR 1.47(a) and 35 U.S.C. 116, second paragraph, requires all available joint inventors to file an application "on behalf of" themselves and on behalf of a joint inventor who "cannot be found or reached after diligent effort" or who refuses to "join in an application."

All the available joint inventors must (1) make oath or declaration on their own behalf as required by 37 CFR 1.63 or 1.175 (see MPEP § 602, § 605.01, and § 1414) and (2) make oath or declaration on behalf of the nonsigning joint inventor as required by 37 CFR 1.64. An oath or declaration signed by all the available joint inventors with the signature block of the nonsigning inventor(s) left blank may be treated as having been signed by all the available joint inventors on behalf of the nonsigning inventor(s), unless otherwise indicated.

Lastly, it is noted that the last known address in the evidence presented indicates that the non-signing inventor resides at 92-201 Paioa Place and in other documents 94-201 Paioa Place. Petitioner should clearly indicate the correct address in the newly executed declaration on renewed petition.

Further correspondence with respect to this matter should be addressed as follows:

By mail:
Mail Stop PETITIONS
Commissioner for Patents
Post Office Box 1450
Alexandria, VA 22313-1450

By hand:
Customer Service Window
Mail Stop Petitions
Randolph Building
401 Dulany Street
Alexandria, VA 22314

By fax:
(571) 273-8300
ATTN: Office of Petitions

Telephone inquiries should be directed to the undersigned at (571) 272-3215.

Charlema Grant
Attorney
Office of Petitions

UNITED STATES PATENT AND TRADEMARK OFFICE

COMMISSIONER FOR PATENTS
UNITED STATES PATENT AND TRADEMARK OFFICE
P.O. BOX 1450
ALEXANDRIA, VA 22313-1450
www.uspto.gov

K&L Gates LLP
IP Docketing
630 HANSEN WAY
PALO ALTO CA 94304

MAILED

AUG 23 2011

OFFICE OF PETITIONS

In re Application of :
Nakasato et al. : DECISION REFUSING STATUS
Application No. 13/006,596 : UNDER 37 CFR 1.47(a)
Filed: January 14, 2011 :
Attorney Docket No. SOPINC-008US :

This is in response to the renewed petition under 37 CFR 1.47(a), filed August 2, 2011.

The petition is dismissed.

Rule 47 applicant is given TWO MONTHS from the mailing date of this decision to reply, correcting the below-noted deficiencies. Any reply should be entitled "Request for Reconsideration of Petition Under 37 CFR 1.47(a)," and should only address the deficiencies noted below, except that the reply may include an oath or declaration executed by the non-signing inventor. **FAILURE TO RESPOND WILL RESULT IN ABANDONMENT OF THE APPLICATION.** Any extensions of time will be governed by 37 CFR 1.136(a).

A grantable petition under 37 CFR 1.47(a) requires: (1) proof that the non-signing inventor cannot be reached or refuses to sign the oath or declaration after having been presented with the application papers (specification, claims and drawings); (2) an acceptable oath or declaration in compliance with 35 U.S.C. §§ 115 and 116; (3) the petition fee; and (4) a statement of the last known address of the non-signing inventor. Applicant lacks item(s) (2) set forth above.

As to item (2), while each inventor need not execute the same oath or declaration, each oath or declaration executed by an inventor must contain a complete listing of all inventors so as to clearly indicate what each inventor believes to be the appropriate inventive entity. Where individual declarations are executed, they must be submitted as individual declarations rather than combined into one declaration. See MPEP 201.03. As such a complete declaration executed by all signing inventors is required.

Further correspondence with respect to this matter should be addressed as follows:

By mail: Mail Stop PETITIONS
Commissioner for Patents
Post Office Box 1450
Alexandria, VA 22313-1450

By hand: Customer Service Window
Mail Stop Petitions
Randolph Building
401 Dulany Street
Alexandria, VA 22314

By fax: (571) 273-8300
ATTN: Office of Petitions

Telephone inquiries should be directed to the undersigned at (571) 272-3215.

Charlema Grant
Attorney
Office of Petitions

UNITED STATES PATENT AND TRADEMARK OFFICE

Commissioner for Patents
United States Patent and Trademark Office
P.O. Box 1450
Alexandria, VA 22313-1450
www.uspto.gov

K&L Gates LLP
IP Docketing
630 HANSEN WAY
PALO ALTO CA 94304

MAILED
SEP 06 2011
OFFICE OF PETITIONS

In re Application of
Keiichi Nakasato, Kip H. Dopp and John Wayne Forester
Application No. 13/006,596
Filed: January 14, 2011
Attorney Docket No. SOPINC-008US
For: SOLAR THERMAL ENERGY ARRAY AND DRIVE

DECISION GRANTING STATUS UNDER 37 CFR 1.47(a)

This is in response to the renewed petition under 37 CFR 1.47(a), filed September 1, 2011.

The petition is **GRANTED.**

Petitioner has shown that the non-signing inventor Nakasato cannot be located to execute the application papers of the above-identified application.

The application and papers have been reviewed and found in compliance with 37 CFR 1.47(a). This application is hereby accorded Rule 1.47(a) status.

As provided in 37 CFR 1.47(c), this Office will forward notice of this application's filing to the non-signing inventor at the address given in the petition. Notice of the filing of this application will also be published in the Official Gazette.

This application is being referred to the Office of Patent Application processing for processing in the normal course of business.

Telephone inquiries regarding this decision should be directed to the undersigned at (571) 272-3215.

Charlema Grant
Petitions Attorney
Office of Petitions

UNITED STATES PATENT AND TRADEMARK OFFICE

Commissioner for Patents
United States Patent and Trademark Office
P.O. Box 1450
Alexandria, VA 22313-1450
www.uspto.gov

MAILED

SEP 06 2011

OFFICE OF PETITIONS

Keiichi Nakasato
94-201 Paioa Place # A102
Waipahu, Hawaii 96797

In re Application of
Keiichi Nakasato, Kip H. Dopp and John Wayne Forester
Application No. 13/006,596
Filed: January 14, 2011
Attorney Docket No. SOPINC-008US
For: SOLAR THERMAL ENERGY ARRAY AND DRIVE

Dear Sir:

You are named as a joint inventor in the above-identified United States patent application, filed under the provisions of 35 U.S.C. 116 (United States Code), and 37 CFR 1.47(a), Rules of Practice in Patent Cases. Should a patent be granted on the application you will be designated therein as a co-inventor.

As a named inventor you are entitled to inspect any paper in the file wrapper of the application, order copies of all or any part thereof (at a prepaid cost per 37 CFR 1.19) or make your position of record in the application. Alternatively, you may arrange to do any of the preceding through a registered patent attorney or agent presenting written authorization from you. If you care to join the application, counsel of record (see below) would presumably assist you. Joining the application would entail the filing of an appropriate oath or declaration by you pursuant to 37 CFR 1.63.

Telephone inquiries regarding this communication should be directed to the undersigned at (571) 272-3215. Requests for information regarding your application should be directed to the File Information Unit at (703) 308-2733. Information regarding how to pay for and order a copy of the application, or a specific paper in the application, should be directed to the Certification Division at (571) 272-3150 or 1 (800) 972-6382 (outside the Washington, DC area).

Charlema Grant
Petitions Attorney
Office of Petitions

cc: K&L Gates LLP
IP Docketing
630 HANSEN WAY
PALO ALTO CA 94304

UNITED STATES PATENT AND TRADEMARK OFFICE

UNITED STATES DEPARTMENT OF COMMERCE
United States Patent and Trademark Office
Address: COMMISSIONER FOR PATENTS
P.O. Box 1450
Alexandria, Virginia 22313-1450
www.uspto.gov

| APPLICATION NO. | FILING DATE | FIRST NAMED INVENTOR | ATTORNEY DOCKET NO. | CONFIRMATION NO. |
|---|---|---|---|---|
| 13/006,638 | 01/14/2011 | Wolfgang Hausladen | 30051/45809 | 4936 |

4743 7590 08/26/2011

MARSHALL, GERSTEIN & BORUN LLP
233 SOUTH WACKER DRIVE
6300 WILLIS TOWER
CHICAGO, IL 60606-6357

| EXAMINER | |
|---|---|
| JOHNSON, CHRISTINA ANN | |
| ART UNIT | PAPER NUMBER |
| 1742 | |

| NOTIFICATION DATE | DELIVERY MODE |
|---|---|
| 08/26/2011 | ELECTRONIC |

**Please find below and/or attached an Office communication concerning this application or proceeding.**

The time period for reply, if any, is set in the attached communication.

Notice of the Office communication was sent electronically on above-indicated "Notification Date" to the following e-mail address(es):

mgbdocket@marshallip.com

Commissioner for Patents
United States Patent and Trademark Office
P.O. Box 1450
Alexandria, VA 22313-1450
www.uspto.gov

wk

Mailed: 8/26/11

In re application of
Hausladen et al.
Serial No. 13/006,638
Filed: January 14, 2011
For: **LABELER AND A LABELING METHOD FOR LABELING PLASTIC BOTTLES IN A BLOW MOLD, IN PARTICULAR IN A ROTARY BLOW MOLDER**

DECISION ON PETITION

This is a response to Applicants request for "Incorrectly Filed Information Disclosure Statement" filed on May 16, 11. The request has been forwarded to Technology Center 1700 for consideration and will be evaluated under 37 CFR 1.181 as a petition (no fee).

Petitioner requests that the Information disclosure Statement (IDS) and PTO/SB08 filed in 13/006,638 to transfer to Application 12/986,299. The current application has two IDS, dated 1/14/11 and 4/11/11. Both IDS's have the current inventor Hausladen et al. listed. Application 12/986,299 list Winzinger as the applicant. It is not clear which IDS needs to be transferred and how it can be transferred if it lists the inventor of the current application.

**DECISION**

The Petition is **DISMISSED**.

/W. GARY JONES/
Director, Technology Center 1700
Chemical and Materials Engineering

Richard B. Hoffman
MARSHALL, GERSTEIN & BORUN LLP
233 SOUTH WACKER DRIVE
6300 WILLIS TOWER
CHICAGO IL 60606-6357

UNITED STATES PATENT AND TRADEMARK OFFICE

Commissioner for Patents
United States Patent and Trademark Office
P.O. Box 1450
Alexandria, VA 22313-1450
www.uspto.gov

**MARSHALL, GERSTEIN & BORUN LLP**
**233 SOUTH WACKER DRIVE**
**6300 WILLIS TOWER**
**CHICAGO IL 60606-6357**

MAILED
MAR 29 2012
OFFICE OF PETITIONS

In re Application of :
Wolfgang Hausladen :
Application No. 13/006,638 : DECISION ON PETITION
Filed: January 14, 2011 :
Attorney Docket No. 30051/45809 :

This is a decision on the Petition to the Director Under 37 CFR 1.181, filed January 19, 2012, which is being treated as a petition under 37 CFR 1.181 (no fee) requesting removal of an IDS in the above-identified application.

The petition is **DISMISSED**.

Petitioner requests removal of an IDS, filed April 11, 2011. Petitioner states the IDS was erroneously filed in the instant application and was meant for another application.

A petition for removal of a paper is not filed under 37 CFR 1.181 but rather must be filed as a petition to expunge a paper under 37 CFR 1.59(b). Petitioner is directed to MPEP 724.05(II-III) and MPEP 724.06. Since a request to expunge an IDS concerns matters material to patentability, such a petition would be handled by the examiner of record.

Telephone inquiries concerning this decision should be directed to Carl Friedman at (571) 272-6842.

Carl Friedman
Petitions Examiner
Office of Petitions

**Doc Code: PET.GREEN**
**Document Description: Petition for Green Tech Pilot**

PTO/SB/420 (03-11)

## PETITION TO MAKE SPECIAL UNDER THE GREEN TECHNOLOGY PILOT PROGRAM

| Attorney Docket Number: HI-0609 | Application Number (if known): 13/006,660 | Filing date: January 14, 2011 |
|---|---|---|

First Named Inventor: Dong Wook PARK

Title: IMAGE DISPLAY APPARATUS AND METHOD OF MANUFACTURING THE SAME

**APPLICANT HEREBY REQUESTS TO PARTICIPATE IN THE GREEN TECHNOLOGY PILOT PROGRAM FOR THE ABOVE-IDENTIFIED APPLICATION. See Instruction Sheet on page 2.**

This petition must be timely filed electronically using the USPTO electronic filing system, EFS-Web.

1. By filing this petition:

   **Applicant is requesting early publication: Applicant hereby requests early publication under 37 CFR 1.219 and the publication fee set forth in 37 CFR 1.18(d) accompanies this request.**

2. By filing this petition: applicant is agreeing to make an election without traverse in a telephonic interview and elect an invention that meets the eligibility requirements for the Green Technology Pilot Program, if the Office determines that the claims are not obviously directed to a single invention. See Instruction Sheet.

3. This request is accompanied by statements of special status for the eligibility requirement.

4. The application contains no more than three (3) independent claims and twenty (20) total claims.

5. The application does not contain any multiple dependent claims.

6. Other attachments: Preliminary Amendment

| Signature | Date June 8, 2011 |
|---|---|
| Name (Print/Typed) Daniel Y.J. Kim | Registration Number 36,168 |

*Note: Signatures of all the inventors or assignees of record of the entire interest or their representative(s) are required in accordance with 37 CFR 1.33 and 11.18. Please see 37 CFR 1.4(d) for the form of the signature. If necessary, submit multiple forms for more than one signature, see below*.*

■ *Total of 3 forms are submitted.

*If you need assistance in completing the form, call 1-800-PTO-9199 and select option 2.*

Docket No.: **HI-0609** PATENT

**IN THE UNITED STATES PATENT AND TRADEMARK OFFICE**

| | | | |
|---|---|---|---|
| In re Application of | | Confirmation No.: | **4980** |
| **Dong Wook PARK** | | Group Art Unit: | **2629** |
| Serial No.: | **13/006,660** | Examiner: | **To Be Assigned** |
| Filed: | **January 14, 2011** | Customer No.: | **34610** |

For: **IMAGE DISPLAY APPARATUS AND METHOD OF MANUFACTURING THE SAME**

**STATEMENT OF SPECIAL STATUS FOR ELIGIBILITY UNDER THE GREEN TECHNOLOGY PILOT PROGRAM**

U.S. Patent and Trademark Office
Customer Service Window, **MAIL STOP PETITIONS**
Randolph Building
401 Dulany Street
Alexandria, Virginia 22314

Sir:

Special status is sought under 37 CFR §1.102 because the invention materially contributes to the more efficient utilization and conservation of energy resources.

Respectfully submitted,
KED & ASSOCIATES, LLP

Daniel Y.J. Kim
Registration No. 36,186

Correspondence Address:
P.O. Box 8638
Reston, VA 20195
703 766-3777 DYK/dak
**Date: June 8, 2011**
**Please direct all correspondence to Customer Number 34610**
Q:\Documents\2019-1168\283340

UNITED STATES PATENT AND TRADEMARK OFFICE

UNITED STATES DEPARTMENT OF COMMERCE
United States Patent and Trademark Office
Address: COMMISSIONER FOR PATENTS
P.O. Box 1450
Alexandria, Virginia 22313-1450
www.uspto.gov

| APPLICATION NO. | FILING DATE | FIRST NAMED INVENTOR | ATTORNEY DOCKET NO. | CONFIRMATION NO. |
|---|---|---|---|---|
| 13/006,660 | 01/14/2011 | Dong Wook PARK | HI-0609 | 4980 |

34610 7590 07/06/2011

KED & ASSOCIATES, LLP
P.O. Box 8638
Reston, VA 20195

| EXAMINER | |
|---|---|
| ART UNIT | PAPER NUMBER |
| 2629 | |

| MAIL DATE | DELIVERY MODE |
|---|---|
| 07/06/2011 | PAPER |

**Please find below and/or attached an Office communication concerning this application or proceeding.**

The time period for reply, if any, is set in the attached communication.

UNITED STATES PATENT AND TRADEMARK OFFICE

Commissioner for Patents
United States Patent and Trademark Office
P.O. Box 1450
Alexandria, VA 22313-1450
www.uspto.gov

KED & ASSOCIATES, LLP
P.O. Box 8638
Reston VA 20195

| | | |
|---|---|---|
| In re Application of | : | |
| Dong PARK | : | DECISION ON PETITION |
| Application No. 13/006,660 | : | TO MAKE SPECIAL UNDER |
| Filed: January 14, 2011 | : | THE GREEN TECHNOLOGY |
| Attorney Docket No. HI-0609 | : | PILOT PROGRAM |

This is a decision on the petition under 37 CFR 1.102, filed on June 08, 2011, to make the above-identified application special under the pilot program for applications pertaining to Green Technologies as set forth 74 Federal Register Notice 64666 (December 8, 2009) and amended by 75 Federal Register Notice 28554 (May 21, 2010) and 75 Federal Register Notice 69049 (November 10, 2010).

The petition is **GRANTED**.

A grantable petition to make an application special under 37 CFR 1.102 and the pilot program as set forth in 74 FR 64666 must be directed to a nonprovisional application filed under 35 USC 111(a) or be a national stage entry under 35 USC 371, exclusive of any reissue applications.

In order to qualify for special status, the following requirements must be met. 1) The application must have no more than 3 independent claims and no more than 20 total claims. 2) The application must not contain any multiple dependent claims. 3) The petition must state the basis for seeking special status, i.e., the claimed invention either: A) materially enhances the quality of the environment or B) materially contributes to: i) the discovery or development of renewable energy resources, ii) the more efficient utilization and conservation of energy resources, or iii) greenhouse gas emission reduction. 4) If the disclosure is not clear on its face that the claimed invention materially contributes under category (A) or (B), the petition must be accompanied by a statement by the applicant, assignee, or an attorney/agent registered to practice before the Office explaining how the materiality standard is met. 5) A statement that applicant will agree to make an election without traverse in a telephonic interview if a restriction requirement is made by the examiner. 6) The petition to make special must be filed electronically. 7) The petition must be filed at least one day prior to the date that a first Office Action appears in the Patent Application Information Retrieval (PAIR) system. 8) The petition must be accompanied by a request for early publication in compliance with 37 CFR 1.219 and include the publication fee as set forth in 37 CFR 1.18(d).

The requirement for a fee for consideration of the petition to make special for applications pertaining to Green Technologies has been waived.

The instant petition complies with items 1 – 8 above. Accordingly, the above-identified application has been accorded "special" status.

Telephone inquires concerning this decision should be directed to Lee W. Young at 571-272-4549.

The application is being forwarded to the Technology Center Art Unit 2629 for action on the merits commensurate with this decision.

Lee W. Young
Quality Assurance Specialist
Technology Center 2600

UNITED STATES PATENT AND TRADEMARK OFFICE

UNITED STATES DEPARTMENT OF COMMERCE
United States Patent and Trademark Office
Address: COMMISSIONER FOR PATENTS
P.O. Box 1450
Alexandria, Virginia 22313-1450
www.uspto.gov

| APPLICATION NO. | FILING DATE | FIRST NAMED INVENTOR | ATTORNEY DOCKET NO. | CONFIRMATION NO. |
|---|---|---|---|---|
| 13/006,684 | 01/14/2011 | Tae Soo CHOI | 09983.0159FPD1 | 5030 |

23552 7590 03/17/2011

MERCHANT & GOULD PC
P.O. BOX 2903
MINNEAPOLIS, MN 55402-0903

| EXAMINER | |
|---|---|
| ART UNIT | PAPER NUMBER |
| 3655 | |

| MAIL DATE | DELIVERY MODE |
|---|---|
| 03/17/2011 | PAPER |

**Please find below and/or attached an Office communication concerning this application or proceeding.**

The time period for reply, if any, is set in the attached communication.

UNITED STATES PATENT AND TRADEMARK OFFICE

MAR 25 2011

Commissioner for Patents
United States Patent and Trademark Office
P.O. Box 1450
Alexandria, VA 22313-1450
www.uspto.gov

MERCHANT & GOULD PC
P.O. BOX 2903
MINNEAPOLIS MN 55402-0903

| | | |
|---|---|---|
| In re application of<br>Tae Soo Choi<br>Application No. 13/006,684<br>Filed: January 14, 2011<br>For: CONTINUOUSLY VARIABLE TRANSMISSION | : | **DECISION ON REQUEST TO PARTICIPATE IN PATENT PROSECUTION HIGHWAY PROGRAM AND PETITION TO MAKE SPECIAL UNDER 37 CFR 1.102(a)** |

This is a decision on the request to participate in the Patent Prosecution Highway (PPH) program and the petition under 37 CFR 1.102(a), filed January 14, 2011, to make the above-identified application special.

The request and petition are **DISMISSED**.

A grantable request to participate in the PPH pilot program and petition to make special require:

(1) The U.S. application must validly claim priority under 35 U.S.C. 119(a) to one or more applications filed in the KIPO, or USPTO;
(2) Applicant must submit a copy of the allowable/patentable claim(s) from the CIPO application(s) along with an English translation thereof and a statement that the English translation is accurate;
(3) All the claims in the U.S. application must sufficiently correspond or be amended to sufficiently correspond to the allowable/patentable claim(s) in the KIPO application(s);
(4) Examination of the U.S. application has not begun;
(5) Applicant must submit a copy of the latest Office action from each of the KIPO application(s) containing the allowable/patentable claim(s) along with an English translation thereof and a statement that the English translation is accurate;
(6) Applicant must submit an IDS listing the documents cited by the KIPO examiner in the KIPO Office action along with copies of documents except U.S. patents or U.S. patent application publications.

The request to participate in the PPH pilot program and petition fail to include:
(3) All the claims in the U.S. application must sufficiently correspond or be amended to sufficiently correspond to the allowable/patentable claim(s) in the KIPO application(s);

It is unclear from the "Claims Corresponding Table" of the petition how claims 5 – 31 in the US application are sufficiently correspond to claims 1 - 37 in the KIPO application. Note, claims 1 - 4 and 32 – 37 of the US application have been cancelled in the preliminary amendment filed 1/14/2011.
It is also unclear as to how the newly added claims 38 – 93 are sufficiently correspond to the allowed claims 24 – 27 and 28 -31 in the KIPO application. Note, claims 28 – 31 of the KIPO application dependent on cancelled claims 1 – 4.
It is requested that applicant outline clearly in the "Claims Corresponding Table" as to how each of claims 5 – 31 and 38 - 93 in the US application sufficiently correspond to allowed claims 1- 37 in the KIPO application.

Applicant is given a time period of **ONE MONTH or THIRTY DAYS**, whichever is longer, to correct the deficiencies. **NO EXTENSION OF TIME UNDER 37 CFR 1.136 IS PERMITTED.** If the deficiencies are not corrected with the time period given, the application will await action in its regular turn. All replies to a decision to dismiss must be submitted by EFS-Web using the document description "Petition to make special under Patent Prosecution Highway."

Any inquiry regarding this decision should be directed to Mikado Buiz, Quality Assurance Specialist, at (571) 272-6578.

/ Mikado Buiz /

Mikado Buiz,
Quality Assurance Specialist
Technology Center 3600

MB/MB: 03/16/11

UNITED STATES PATENT AND TRADEMARK OFFICE

Commissioner for Patents
United States Patent and Trademark Office
P.O. Box 1450
Alexandria, VA 22313-1450
www.uspto.gov

MAY 2 4 2011

MERCHANT & GOULD PC
P.O. BOX 2903
MINNEAPOLIS MN 55402-0903

In re application of
Tae Soo Choi
Application No. 13/006,684
Filed: January 14, 2011
For: CONTINUOUSLY VARIABLE TRANSMISSION

: **DECISION ON REQUEST TO PARTICIPATE IN PATENT PROSECUTION HIGHWAY PROGRAM AND PETITION TO MAKE SPECIAL UNDER 37 CFR 1.102(a)**

This is a decision on the renewed request to participate in the Patent Prosecution Highway (PPH) program and the petition under 37 CFR 1.102(a), filed April 18, 2011, to make the above-identified application special.

The request and petition are **GRANTED**.

A grantable request to participate in the PPH program and petition to make special require:

(1) The U.S. application must validly claim priority under 35 U.S.C. 119(a) to one or more applications filed in the KIPO or the USPTO;
(2) Applicant must submit a copy of the allowable/patentable claim(s) from the KIPO application(s) along with an English translation thereof and a statement that the English translation is accurate;
(3) All the claims in the U.S. application must sufficiently correspond or be amended to sufficiently correspond to the allowable/patentable claim(s) in the KIPO application(s);
(4) Examination of the U.S. application has not begun;
(5) Applicant must submit a copy of the latest Office action from each of the KIPO application(s) containing the allowable/patentable claim(s) along with an English translation thereof and a statement that the English translation is accurate;
(6) Applicant must submit an IDS listing the documents cited by the KIPO examiner in the KIPO Office action along with copies of documents except U.S. patents or U.S. patent application publications.

In light of renewed petition, filed on April 18, 2011, the request to participate in the PPH program complies with the above requirements. Therefore, the above-identified application has been accorded "special" status.

All other inquiries concerning the examination or status of the application should be directed to the Patent Application Information Retrieval (PAIR) system.

The application is being forwarded to the examiner for action on the merits commensurate with this decision.

Any inquiry regarding this decision should be directed to Mikado Buiz, Quality Assurance Specialist, at (571) 272-6578.

/ Mikado Buiz /

Mikado Buiz,
Quality Assurance Specialist
Technology Center 3600

MB/MB: 5/24/11

**Doc Code: PET.GREEN**
**Document Description: Petition for Green Tech Pilot**

PTO/SB/420 (03-11)

## PETITION TO MAKE SPECIAL UNDER THE GREEN TECHNOLOGY PILOT PROGRAM

| Attorney Docket Number: HI-0610 | Application Number (if known): 13/006,687 | Filing date: January 14, 2011 |
|---|---|---|

First Named Inventor: Joong In AN

Title: LIGHT EMITTING DIODE PACKAGE AND LIGHT UNIT HAVING THE SAME

**APPLICANT HEREBY REQUESTS TO PARTICIPATE IN THE GREEN TECHNOLOGY PILOT PROGRAM FOR THE ABOVE-IDENTIFIED APPLICATION. See Instruction Sheet on page 2.**

This petition must be timely filed electronically using the USPTO electronic filing system, EFS-Web.

1. By filing this petition:

   **Applicant is requesting early publication: Applicant hereby requests early publication under 37 CFR 1.219 and the publication fee set forth in 37 CFR 1.18(d) accompanies this request.**

2. By filing this petition: applicant is agreeing to make an election without traverse in a telephonic interview and elect an invention that meets the eligibility requirements for the Green Technology Pilot Program, if the Office determines that the claims are not obviously directed to a single invention. See Instruction Sheet.

3. This request is accompanied by statements of special status for the eligibility requirement.

4. The application contains no more than three (3) independent claims and twenty (20) total claims.

5. The application does not contain any multiple dependent claims.

6. Other attachments: _____

| Signature | Date May 18, 2011 |
|---|---|
| Name (Print/Typed) Daniel Y.J. Kim | Registration Number 36,168 |

***Note:*** *Signatures of all the inventors or assignees of record of the entire interest or their representative(s) are required in accordance with 37 CFR 1.33 and 11.18. Please see 37 CFR 1.4(d) for the form of the signature. If necessary, submit multiple forms for more than one signature, see below*.*

■ *Total of 2 forms are submitted.

*If you need assistance in completing the form, call 1-800-PTO-9199 and select option 2.*

Docket No.: **HI-0610** PATENT

**IN THE UNITED STATES PATENT AND TRADEMARK OFFICE**

| | | | |
|---|---|---|---|
| In re Application of | | Confirmation No.: | **5035** |
| **Joong In AN** | | Group Art Unit: | **2811** |
| Serial No.: | **13/006,687** | Examiner: | **To Be Assigned** |
| Filed: | **January 14, 2011** | Customer No.: | **34610** |

For: **LIGHT EMITTING DIODE PACKAGE AND LIGHT UNIT HAVING THE SAME**

**STATEMENT OF SPECIAL STATUS FOR ELIGIBILITY UNDER THE GREEN TECHNOLOGY PILOT PROGRAM**

U.S. Patent and Trademark Office
Customer Service Window, **MAIL STOP PETITIONS**
Randolph Building
401 Dulany Street
Alexandria, Virginia 22314

Sir:

Special status is sought under 37 CFR §1.102 because the invention materially contributes to the more efficient utilization and conservation of energy resources.

Respectfully submitted,
KED & ASSOCIATES, LLP

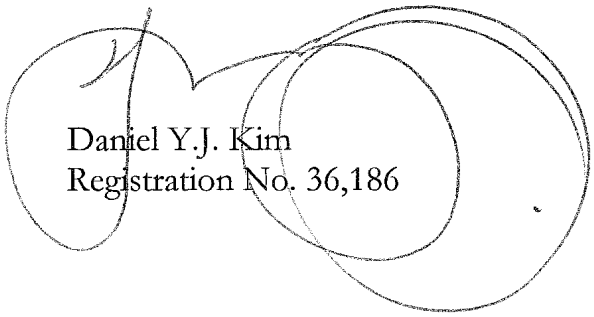

Daniel Y.J. Kim
Registration No. 36,186

Correspondence Address:
P.O. Box 8638
Reston, VA 20195
703 766-3777 DYK/dak

**Date: May 18, 2011**

**Please direct all correspondence to Customer Number 34610**

Q:\Documents\2019-1169\280197

UNITED STATES PATENT AND TRADEMARK OFFICE

UNITED STATES DEPARTMENT OF COMMERCE
United States Patent and Trademark Office
Address: COMMISSIONER FOR PATENTS
P.O. Box 1450
Alexandria, Virginia 22313-1450
www.uspto.gov

| APPLICATION NO. | FILING DATE | FIRST NAMED INVENTOR | ATTORNEY DOCKET NO. | CONFIRMATION NO. |
|---|---|---|---|---|
| 13/006,687 | 01/14/2011 | Joong In AN | HI-0610 | 5035 |

34610 7590 05/25/2011

KED & ASSOCIATES, LLP
P.O. Box 8638
Reston, VA 20195

| EXAMINER | |
|---|---|
| ART UNIT | PAPER NUMBER |
| 2811 | |

| MAIL DATE | DELIVERY MODE |
|---|---|
| 05/25/2011 | PAPER |

**Please find below and/or attached an Office communication concerning this application or proceeding.**

The time period for reply, if any, is set in the attached communication.

UNITED STATES PATENT AND TRADEMARK OFFICE

Commissioner for Patents
United States Patent and Trademark Office
P.O. Box 1450
Alexandria, VA 22313-1450
www.uspto.gov

KED & ASSOCIATES, LLP
P.O. Box 8638
Reston VA 20195

| | | |
|---|---|---|
| In re Application of | : | |
| Joong In AN | : | DECISION ON PETITION |
| Application No. 13/006,687 | : | TO MAKE SPECIAL UNDER |
| Filed: January 14, 2011 | : | THE GREEN TECHNOLOGY |
| Attorney Docket No. HI-0610 | : | PILOT PROGRAM |

This is a decision on the petition under 37 CFR 1.102, filed on May 18, 2011, to make the above-identified application special under the pilot program for applications pertaining to Green Technologies as set forth 74 Federal Register Notice 64666 (December 8, 2009) and amended by 75 Federal Register Notice 28554 (May 21, 2010) and 75 Federal Register Notice 69049 (November 10, 2010).

The petition is **DISMISSED**.

If reconsideration of this decision is desired, a petition for reconsideration must be filed within ONE (1) MONTH OR THIRTY (30) DAYS from the mail date of this decision, whichever is longer. No extension of this time limit can be granted under 37 CFR 1.136(a) or (b). The petition for reconsideration should include an exhaustive attempt to provide the lacking item(s) noted below, since, after a decision on the petition for reconsideration, no further reconsideration or review of the matter will be undertaken by the Director.

A grantable petition to make an application special under 37 CFR 1.102 and the pilot program as set forth in 74 FR 64666 must be directed to a nonprovisional application filed under 35 USC 111(a) or be a national stage entry under 35 USC 371, exclusive of any reissue applications and be filed prior to the date of the notice, December 8, 2009.

In order to qualify for special status, the following requirements must be met. 1) The application must have no more than 3 independent claims and no more than 20 total claims. 2) The application must not contain any multiple dependent claims. 3) The petition must state the basis for seeking special status, i.e., the claimed invention either: A) materially enhances the quality of the environment or B) materially contributes to: i) the discovery or development of renewable energy resources, ii) the more efficient utilization and conservation of energy resources, or iii) greenhouse gas emission reduction. 4) If the disclosure is not clear on its face that the claimed invention materially contributes under category (A) or (B), the petition must be accompanied by a statement by the applicant, assignee, or an attorney/agent registered to practice before the Office explaining how the materiality standard is met. 5) A statement that applicant will agree to

make an election without traverse in a telephonic interview if a restriction requirement is made by the examiner. 6) The petition to make special must be filed electronically. 7) The petition must be filed at least one day prior to the date that a first Office Action appears in the Patent Application Information Retrieval (PAIR) system. 8) The petition must be accompanied by a request for early publication in compliance with 37 CFR 1.219 and include the publication fee as set forth in 37 CFR 1.18(d).

The requirement for a fee for consideration of the petition to make special for applications pertaining to Green Technologies has been waived.

The petition lacks item 4.

In regard to item 4, applicant's statement pertaining to how the materiality standard is met does not satisfy the requirements for this pilot. The petition alleges that the claimed invention contributes to more efficient utilization and conservation of energy. The claims do not limited the light emitting device to an LED or semiconductor based light emitting device. The materiality standard does not permit an applicant to speculate as to how a hypothetical end-user might specially apply the invention in a manner that could contribute to more efficient utilization and conservation of energy. Any argument that the claimed invention can be used with LEDs is considered speculate as to how a hypothetical end-user might specially apply the claimed invention. Favorable consideration would be given if the claims were amended to specifically require the light emitting device to be an LED or semiconductor based light emitting device.

Any reconsideration of this decision should be submitted through the USPTO electronic filing system, EFS-Web, and selecting the document description of "Petition for Green Tech Pilot" on the EFS-Web screen.

Telephone inquiries concerning this decision should be directed to Lee W. Young at 571-272-4549.

The application is being forwarded to the Technology Center Art Unit 2811 for action in its regular turn.

Lee W. Young
Quality Assurance Specialist
Technology Center 2800

Docket No.: **HI-0610** PATENT

**IN THE UNITED STATES PATENT AND TRADEMARK OFFICE**

| | | | |
|---|---|---|---|
| In re Application of: | | Confirmation No.: | **5035** |
| **Joong In AN** | | Group Art Unit: | **2811** |
| Serial No.: | **13/006,687** | Examiner: | **To Be Assigned** |
| Filed: | **January 14, 2011** | Customer No.: | **34610** |

For: **LIGHT EMITTING DIODE PACKAGE AND LIGHT UNIT HAVING THE SAME**

**PETITION FOR RECONSIDERATION OF PETITION TO MAKE SPECIAL UNDER THE GREEN TECHNOLOGY PILOT PROGRAM**

U.S. Patent and Trademark Office
Customer Service Window, **MAIL STOP PETITIONS**
Randolph Building
401 Dulany Street
Alexandria, VA 22314

Sir:

Applicant filed a Petition to Make Special under the Green Technology Pilot Program on May 18, 2011. In response, the Patent Office provided a Decision on Petition dated May 25, 2011 (hereafter the Decision). The Decision states that the previously filed petition lacks Item #4.

Independent claims 1, 13, and 16 have been amended to positively recite a light emitting device including a nitride-based semiconductor layer. Accordingly, Applicant respectfully submits that the claimed features including LEDs contribute to a more efficient utilization of conservation of energy resources. Applicant further believes that the features are clearly set forth in regard to the claimed features and are set forth throughout the specification.

Applicant respectfully maintains all the statements made in the Petition filed May 18, 2011. Applicants respectfully request that the Petition filed May 18, 2011 be granted in view of the above.

To the extent necessary, a petition for an extension of time under 37 C.F.R. §1.136 is hereby made. Please charge any shortage in fees (including any petition fee) due in connection with the filing of this, concurrent and future replies, including extension of time fees, to Deposit Account 16-0607 and please credit any excess fees to such deposit account.

Respectfully submitted,
KED & ASSOCIATES, LLP

Daniel Y.J. Kim
Registration No. 36,186

Correspondence Address:
P.O. Box 8638
Reston, VA 20195
703 766-3777 DYK/dak
**Please direct all correspondence to Customer Number 34610**
Q:\Documents\2019-1169\284581

UNITED STATES PATENT AND TRADEMARK OFFICE

UNITED STATES DEPARTMENT OF COMMERCE
United States Patent and Trademark Office
Address: COMMISSIONER FOR PATENTS
P.O. Box 1450
Alexandria, Virginia 22313-1450
www.uspto.gov

| APPLICATION NO. | FILING DATE | FIRST NAMED INVENTOR | ATTORNEY DOCKET NO. | CONFIRMATION NO. |
|---|---|---|---|---|
| 13/006,687 | 01/14/2011 | Joong In AN | HI-0610 | 5035 |

34610 7590 06/30/2011

KED & ASSOCIATES, LLP
P.O. Box 8638
Reston, VA 20195

| EXAMINER | |
|---|---|
| ART UNIT | PAPER NUMBER |
| 2811 | |

| MAIL DATE | DELIVERY MODE |
|---|---|
| 06/30/2011 | PAPER |

**Please find below and/or attached an Office communication concerning this application or proceeding.**

The time period for reply, if any, is set in the attached communication.

UNITED STATES PATENT AND TRADEMARK OFFICE

Commissioner for Patents
United States Patent and Trademark Office
P.O. Box 1450
Alexandria, VA 22313-1450
www.uspto.gov

KED & ASSOCIATES, LLP
P.O. Box 8638
Reston VA 20195

6/30/11

In re Application of :
An :
Application No. 13/006,687 :
Filed: 1/14/2011 :
Attorney Docket No. **HI-0610** :

DECISION ON PETITION
TO MAKE SPECIAL UNDER
THE GREEN TECHNOLOGY
PILOT PROGRAM

This is a decision on the request for reconsideration, filed 6/17/2011, to make the above-identified application special under the pilot program for applications pertaining to Green Technologies as set forth in 74 Federal Register Notice 64666 (December 8, 2009) and amended by 75 Federal Register Notice 28554 (May 21, 2010) and 75 Federal Register Notice 69049 (November 10, 2010).

The petition is **GRANTED**.

A grantable petition to make an application special under 37 CFR 1.102 and the pilot program as set forth in 74 FR 64666 must be directed to a nonprovisional application filed under 35 USC 111(a) or be a national stage entry under 35 USC 371, exclusive of any reissue applications.

In order to qualify for special status, the following requirements must be met. 1) The application must have no more than 3 independent claims and no more than 20 total claims. 2) The application must not contain any multiple dependent claims. 3) The petition must state the basis for seeking special status, i.e., the claimed invention either: A) materially enhances the quality of the environment or B) materially contributes to: i) the discovery or development of renewable energy resources, ii) the more efficient utilization and conservation of energy resources, or iii) greenhouse gas emission reduction. 4) If the disclosure is not clear on its face that the claimed invention materially contributes under category (A) or (B), the petition must be accompanied by a statement by the applicant, assignee, or an attorney/agent registered to practice before the Office explaining how the materiality standard is met. 5) A statement that applicant will agree to make an election without traverse in a telephonic interview if a restriction requirement is made by the examiner. 6) The petition to make special must be filed electronically. 7) The petition must be filed at least one day prior to the date that a first Office Action appears in the Patent Application Information Retrieval (PAIR) system. 8) The petition must be accompanied by a request for early publication in compliance with 37 CFR 1.219 and include the publication fee as set forth in 37 CFR 1.18(d).

The requirement for a fee for consideration of the petition to make special for applications pertaining to Green Technologies has been waived.

The instant petition complies with items 1 – 8 above. Accordingly, the above-identified application has been accorded "special" status.

Telephone inquires concerning this decision should be directed to Tom Dunn at 571-272-1171.

The application is being forwarded to the Technology Center Art Unit 2811 for action on the merits commensurate with this decision.

/Tom Dunn/

Tom Dunn
Quality Assurance Specialist
Technology Center 1700

UNITED STATES PATENT AND TRADEMARK OFFICE

Commissioner for Patents
United States Patent and Trademark Office
P.O. Box 1450
Alexandria, VA 22313-1450
www.uspto.gov

In re Application of
Michael A. Bass

Application No. 13006714

Filed:

Attorney Docket No. 16223-PENDING

:DECISION ON PETITION TO MAKE SPECIAL
:UNDER 37 CFR 1.102(c)(1)

This is a decision on the electronic petition under 37 CFR 1.102 (c)(1), filed 14-JAN-2011 to make the above-identified application special based on applicant's age as set forth in MPEP § 708.02, Section IV.

The petition is **GRANTED**.

A grantable petition to make an application special under 37 CFR 1.102(c)(1), MPEP § 708.02, Section IV: Applicant's Age must include a statement by applicant or a registered practitioner having evidence that applicant is at least 65 years of age. No fee is required.

Accordingly, the above-identified application has been accorded "special" status and will be taken up for action by the examiner upon the completion of all pre-examination processing.

Telephone inquiries concerning this electronic decision should be directed to the Electronic Business Center at 866-217-9197.

All other inquiries concerning either the examination or status of the application should be directed to the Technology Center.

**Doc Code: PPH.PCT.652**
**Document Description: Petition to make special under PCT-Patent Pros Hwy**

PTO/SB/20PCT-KR (06-10)
Approved for use through 01/31/2012. OMB 0651-0058
U.S. Patent and Trademark Office; U. S. DEPARTMENT OF COMMERCE
Under the Paperwork Reduction Act of 1995, no persons are required to respond to a collection of information unless it displays a valid OMB control number.

# REQUEST FOR PARTICIPATION IN THE PATENT COOPERATION TREATY - PATENT PROSECUTION HIGHWAY (PCT-PPH) PILOT PROGRAM BETWEEN THE KOREAN INTELLECTUAL PROPERTY OFFICE (KIPO) AND THE USPTO

| | | | |
|---|---|---|---|
| Application No: | 13/006,870 | Filing date: | January 14, 2011 |
| First Named Inventor: | Mark Statham | | |
| Title of the Invention: | Systems and Methods for Emitting Radiant Energy | | |

**THIS REQUEST FOR PARTICIPATION IN THE PCT-PPH PILOT PROGRAM ALONG WITH THE REQUIRED DOCUMENTS MUST BE SUBMITTED VIA EFS-WEB. INFORMATION REGARDING EFS-WEB IS AVAILABLE AT HTTP://WWW.USPTO.GOV/EBC/EFS_HELP.HTML**

**APPLICANT HEREBY REQUESTS PARTICIPATION IN THE PCT-PPH PROGRAM AND PETITIONS TO MAKE THE ABOVE-IDENTIFIED APPLICATION SPECIAL UNDER THE PCT-PPH PROGRAM.**

The above-identified application is (1) a national stage entry of the corresponding PCT application, or (2) a national stage entry of another PCT application which claims priority to the corresponding PCT application, or (3) a national application that claims domestic/ foreign priority to the corresponding PCT application, or (4) a national application which forms the basis for the priority claim in the corresponding PCT application, or (5) a continuing application of a U.S. application that satisfies one of (1) to (4) above, or (6) a U.S. application that claims domestic benefit to a U.S. provisional application which forms the basis for the priority claim in the corresponding PCT application.

**The corresponding PCT application number(s) is/are:** PCT/US2011/021397

**The international filing date of the corresponding PCT application(s) is/are:**
January 14, 2011

**I. List of Required Documents:**

a. **A copy of the latest international work product (WO/ISA, WO/IPEA, or IPER) in the above–identified corresponding PCT application(s)**

☑ Is attached.

☐ Is not attached because the document is already in the U.S. application.

b. **A copy of all claims which were indicated as having novelty, inventive step and industrial applicability in the above-identified corresponding PCT application(s).**

☐ Is attached.

☑ Is not attached because the document is already in the U.S. application.

c. **English translations of the documents in a. and b. above are attached (if the documents are not in the English language). A statement that the English translation is accurate is attached for the document in b. above.**



This collection of information is required by 35 U.S.C. 119, 37 CFR 1.55, and 37 CFR 1.102(d). The information is required to obtain or retain a benefit by the public, which is to file (and by the USPTO to process) an application. Confidentiality is governed by 35 U.S.C. 122 and 37 CFR 1.11 and 1.14. This collection is estimated to take 2 hours to complete, including gathering, preparing, and submitting the completed application form to the USPTO. Time will vary depending upon the individual case. Any comments on the amount of time you require to complete this form and/or suggestions for reducing this burden should be sent to the Chief Information Officer, U.S. Patent and Trademark Office, U.S. Department of Commerce, P.O. Box 1450, Alexandria, VA 22313-1450. DO NOT SEND FEES OR COMPLETED FORMS TO THIS ADDRESS.

PTO/SB/20PCT-KR (06-10)
Approved for use through 01/31/2012. OMB 0651-0058
U.S.Patent and Trademark Office; U.S. DEPARTMENT OF COMMERCE
Under the Paperwork Reduction Act of 1995, no persons are required to respond to a collection of information unless it displays a valid OMB control number.

# REQUEST FOR PARTICIPATION IN THE PCT-PPH PILOT PROGRAM BETWEEN THE KIPO AND THE USPTO

(continued)

| | |
|---|---|
| Application No.: | 13/006,870 |
| First Named Inventor: | Mark Statham |

d. **(1) An information disclosure statement listing the documents cited in the international work products (ISR, WO/ISA, WO/IPEA, IPER) of the corresponding PCT application.**

☑ Is attached

☐ Has already been filed in the above-identified U.S. application on _____

**(2) Copies of all documents (except) for U.S. patents or U.S. patent application publications)**

☐ Are attached.

☐ Have already been filed in the above-identified U.S. application on _____

**II. Claims Correspondence Table:**

| Claims in US Application | Patentable Claims in the corresponding PCT Application | Explanation regarding the correspondence |
|---|---|---|
| 1-20 | 1-20 | All of the claims are identical |
| | | |
| | | |
| | | |
| | | |
| | | |
| | | |
| | | |
| | | |
| | | |
| | | |
| | | |
| | | |
| | | |
| | | |
| | | |
| | | |
| | | |

**III. All the claims in the US application sufficiently correspond to the patentable claims in the corresponding PCT application.**

| | |
|---|---|
| Signature /Stephanie M. Mansfield/ | Date 1/10/2012 |
| Name (Print/Typed) Stephanie M. Mansfield | Registration Number 43,773 |

# Privacy Act Statement

The **Privacy Act of 1974 (P.L. 93-579)** requires that you be given certain information in connection with your submission of the attached form related to a patent application or patent. Accordingly, pursuant to the requirements of the Act, please be advised that: (1) the general authority for the collection of this information is 35 U.S.C. 2(b)(2); (2) furnishing of the information solicited is voluntary; and (3) the principal purpose for which the information is used by the U.S. Patent and Trademark Office is to process and/or examine your submission related to a patent application or patent. If you do not furnish the requested information, the U.S. Patent and Trademark Office may not be able to process and/or examine your submission, which may result in termination of proceedings or abandonment of the application or expiration of the patent.

The information provided by you in this form will be subject to the following routine uses:

1. The information on this form will be treated confidentially to the extent allowed under the Freedom of Information Act (5 U.S.C. 552) and the Privacy Act (5 U.S.C 552a). Records from this system of records may be disclosed to the Department of Justice to determine whether disclosure of these records is required by the Freedom of Information Act.
2. A record from this system of records may be disclosed, as a routine use, in the course of presenting evidence to a court, magistrate, or administrative tribunal, including disclosures to opposing counsel in the course of settlement negotiations.
3. A record in this system of records may be disclosed, as a routine use, to a Member of Congress submitting a request involving an individual, to whom the record pertains, when the individual has requested assistance from the Member with respect to the subject matter of the record.
4. A record in this system of records may be disclosed, as a routine use, to a contractor of the Agency having need for the information in order to perform a contract. Recipients of information shall be required to comply with the requirements of the Privacy Act of 1974, as amended, pursuant to 5 U.S.C. 552a(m).
5. A record related to an International Application filed under the Patent Cooperation Treaty in this system of records may be disclosed, as a routine use, to the International Bureau of the World Intellectual Property Organization, pursuant to the Patent Cooperation Treaty.
6. A record in this system of records may be disclosed, as a routine use, to another federal agency for purposes of National Security review (35 U.S.C. 181) and for review pursuant to the Atomic Energy Act (42 U.S.C. 218(c)).
7. A record from this system of records may be disclosed, as a routine use, to the Administrator, General Services, or his/her designee, during an inspection of records conducted by GSA as part of that agency's responsibility to recommend improvements in records management practices and programs, under authority of 44 U.S.C. 2904 and 2906. Such disclosure shall be made in accordance with the GSA regulations governing inspection of records for this purpose, and any other relevant ( *i.e.*, GSA or Commerce) directive. Such disclosure shall not be used to make determinations about individuals.
8. A record from this system of records may be disclosed, as a routine use, to the public after either publication of the application pursuant to 35 U.S.C. 122(b) or issuance of a patent pursuant to 35 U.S.C. 151. Further, a record may be disclosed, subject to the limitations of 37 CFR 1.14, as a routine use, to the public if the record was filed in an application which became abandoned or in which the proceedings were terminated and which application is referenced by either a published application, an application open to public inspection or an issued patent.
9. A record from this system of records may be disclosed, as a routine use, to a Federal, State, or local law enforcement agency, if the USPTO becomes aware of a violation or potential violation of law or regulation.

UNITED STATES PATENT AND TRADEMARK OFFICE

Commissioner for Patents
United States Patent and Trademark Office
P.O. Box 1450
Alexandria, VA 22313-1450
www.uspto.gov

**BROOKS KUSHMAN P.C.**
**1000 TOWN CENTER**
**TWENTY-SECOND FLOOR**
**SOUTHFIELD MI 48075**

**MAILED**

MAR 28 2012

**OFFICE OF PETITIONS**

In re Application of:
Statham et al.
Application No. 13/006,870
Filed: January 14, 2011
Attorney Docket No. IPT 0104 PUSP

: DECISION ON REQUEST TO
: PARTICIPATE IN THE PATENT
: PROSECUTION HIGHWAY
: PROGRAM AND PETITION
: TO MAKE SPECIAL UNDER
: 37 CFR 1.102(a)

This is a decision on the request to participate in the PCT Patent Prosecution Highway (PCT-PPH) pilot program and the petition under 37 CFR 1.102(a), filed on January 16, 2012 to make the above-identified application special.

The request and petition are **GRANTED**.

**Discussion**

A grantable request to participate in the PCT-PPH pilot program and petition to make special require:

(1) The U.S. application must have an eligible relationship to one or more PCT applications where the ISA or IPEA are the JPO, EPO, KIPO, NPI, NBPR, or USPTO;

(2) At least one claim in the PCT application has novelty, inventive step, and industrial applicability and must be free of any observations in Box VIII in the latest work product in the international stage or applicant must identify and explain why the claim(s) is/are not subject to the observation in Box VIII;

(3) Applicant must submit a copy of the claim(s) from the PCT application(s) that have novelty, inventive step, and industrial applicability along with an English translation thereof and a statement that the English translation is accurate, if the claims are not in the English language;

(4) All the claims in the U.S. application must sufficiently correspond or be amended to sufficiently correspond to the claim(s) that have novelty, inventive step, and industrial applicability in the PCT application(s);

(5) Examination of the U.S. application has not begun;

(6) Applicant must submit a copy of the latest international work product from the PCT application indicating that the claim(s) have novelty, inventive step, and industrial applicability along with an English translation thereof and a statement that the English translation is accurate if the latest international work product is not in the English language;

(7) Applicant must submit an IDS listing the documents cited by the PCT examiner in the international work product along with copies of documents except U.S. patents or U.S. patent application publications.

The request to participate in the PCT-PPH pilot program and petition comply with the above requirements. Accordingly, the above-identified application has been accorded "special" status.

Telephone inquiries concerning this decision should be directed to Joan Olszewski at 571-272-7751.

All other inquiries concerning the examination or status of the application is accessible in the PAIR system at http://www.uspto.gov/ebc.index.html.

This application will be forwarded to the examiner for action on the merits commensurate with this decision once this application's formality reviews have been completed.

/dab/
David Bucci
Petitions Examiner
Office of Petitions

| Issue Classification | Application/Control No. | Applicant(s)/Patent under Reexamination | |
|---|---|---|---|
| | 13/006,928 | BLOCK ET AL. | |
| | Examiner | Art Unit | |
| | FRANK LU | 1634 | |

# ISSUE CLASSIFICATION

| ORIGINAL | | | CROSS REFERENCE(S) | | | | | | | |
|---|---|---|---|---|---|---|---|---|---|---|
| CLASS | SUBCLASS | CLASS | SUBCLASS (ONE SUBCLASS PER BLOCK) | | | | | | | |
| 435 | 6.1 | 435 | 6.11 | 91.1 | 287.2 | 288.6 | | | | |
| INTERNATIONAL CLASSIFICATION | | 536 | 23.1 | | | | | | | |
| C 12 Q 1/68 | | | | | | | | | | |
| C 12 P 19/34 | | | | | | | | | | |
| C 12 M 1/34 | | | | | | | | | | |
| C 12 M 3/00 | | | | | | | | | | |
| C 07 H 21/02 | | | | | | | | | | |

| (Assistant Examiner) (Date) | /Frank W Lu/ 2/3/2012 | Total Claims Allowed: 7 | |
|---|---|---|---|
| (Legal Instruments Examiner) (Date) | (Primary Examiner) (Date) | O.G. Print Claim(s): 1 | O.G. Print Fig.: None |

☐ Claims renumbered in the same order as presented by applicant ☐ CPA ☐ T.D. ☐ R.1.47

| Final | Original | Final | Original | Final | Original | Final | Original | Final | Original | Final | Original | Final | Original |
|---|---|---|---|---|---|---|---|---|---|---|---|---|---|
| | 1 | | 31 | | 61 | | 91 | | 121 | | 151 | | 181 |
| | 2 | | 32 | | 62 | | 92 | | 122 | | 152 | | 182 |
| | 3 | | 33 | | 63 | | 93 | | 123 | | 153 | | 183 |
| | 4 | | 34 | | 64 | | 94 | | 124 | | 154 | | 184 |
| | 5 | | 35 | | 65 | | 95 | | 125 | | 155 | | 185 |
| | 6 | | 36 | | 66 | | 96 | | 126 | | 156 | | 186 |
| | 7 | | 37 | | 67 | | 97 | | 127 | | 157 | | 187 |
| | 8 | | 38 | | 68 | | 98 | | 128 | | 158 | | 188 |
| | 9 | | 39 | | 69 | | 99 | | 129 | | 159 | | 189 |
| | 10 | | 40 | | 70 | | 100 | | 130 | | 160 | | 190 |
| 1 | 11 | | 41 | | 71 | | 101 | | 131 | | 161 | | 191 |
| 2 | 12 | | 42 | | 72 | | 102 | | 132 | | 162 | | 192 |
| 3 | 13 | | 43 | | 73 | | 103 | | 133 | | 163 | | 193 |
| 7 | 14 | | 44 | | 74 | | 104 | | 134 | | 164 | | 194 |
| 4 | 15 | | 45 | | 75 | | 105 | | 135 | | 165 | | 195 |
| 5 | 16 | | 46 | | 76 | | 106 | | 136 | | 166 | | 196 |
| 6 | 17 | | 47 | | 77 | | 107 | | 137 | | 167 | | 197 |
| | 18 | | 48 | | 78 | | 108 | | 138 | | 168 | | 198 |
| | 19 | | 49 | | 79 | | 109 | | 139 | | 169 | | 199 |
| | 20 | | 50 | | 80 | | 110 | | 140 | | 170 | | 200 |
| | 21 | | 51 | | 81 | | 111 | | 141 | | 171 | | 201 |
| | 22 | | 52 | | 82 | | 112 | | 142 | | 172 | | 202 |
| | 23 | | 53 | | 83 | | 113 | | 143 | | 173 | | 203 |
| | 24 | | 54 | | 84 | | 114 | | 144 | | 174 | | 204 |
| | 25 | | 55 | | 85 | | 115 | | 145 | | 175 | | 205 |
| | 26 | | 56 | | 86 | | 116 | | 146 | | 176 | | 206 |
| | 27 | | 57 | | 87 | | 117 | | 147 | | 177 | | 207 |
| | 28 | | 58 | | 88 | | 118 | | 148 | | 178 | | 208 |
| | 29 | | 59 | | 89 | | 119 | | 149 | | 179 | | 209 |
| | 30 | | 60 | | 90 | | 120 | | 150 | | 180 | | 210 |

Doc code : PET.OP.AGE
Description : Petition to make special based on Age/Health

PTO/SB/130 (07-09)
Approved for use through 07/31/2012. OMB 0651- 0031
U.S. Patent and Trademark Office; U.S. DEPARTMENT OF COMMERCE
Under the Paperwork Reduction Act of 1995, no persons are required to respond to a collection of information unless it contains a valid OMB control number

## PETITION TO MAKE SPECIAL BASED ON AGE FOR ADVANCEMENT OF EXAMINATION UNDER 37 CFR 1.102(c)(1)

### Application Information

| | | | | | |
|---|---|---|---|---|---|
| Application Number | 13006948 | Confirmation Number | 5624 | Filing Date | 2011-01-14 |
| Attorney Docket Number (optional) | 059686-002USPT | Art Unit | 2838 | Examiner | Jeffrey Sterrett |
| First Named Inventor | Leo F. Valenti | | | | |
| Title of Invention | System and Method for Regulating RMS Voltage Delivered to a Load | | | | |

**Attention: Office of Petitions**
An application may be made special for advancement of examination upon filing of a petition showing that the applicant is 65 years of age, or more. No fee is required with such a petition. See 37 CFR 1.102(c)(1) and MPEP 708.02 (IV).

APPLICANT HEREBY PETITIONS TO MAKE SPECIAL FOR ADVANCEMENT OF EXAMINATION IN THIS APPLICATION UNDER 37 CFR 1.102(c)(1) and MPEP 708.02 (IV) ON THE BASIS OF THE APPLICANT'S AGE.

A grantable petition requires one of the following items:
(1) Statement by one named inventor in the application that he/she is 65 years of age, or more; or
(2) Certification by a registered attorney/agent having evidence such as a birth certificate, passport, driver's license, etc. showing one named inventor in the application is 65 years of age, or more.

**Name of Inventor who is 65 years of age, or older**

| Given Name | Middle Name | Family Name | Suffix |
|---|---|---|---|
| Leo | F. | Valenti | |

A signature of the applicant or representative is required in accordance with 37 CFR 1.33 and 10.18.
Please see 37 CFR 1.4(d) for the format of the signature.

Select (1) or (2) :

○ (1) I am an inventor in this application and I am 65 years of age, or more.

◉ (2) I am an attorney or agent registered to practice before the Patent and Trademark Office, and I certify that I am in possession of evidence, and will retain such in the application file record, showing that the inventor listed above is 65 years of age, or more.

| | | | |
|---|---|---|---|
| Signature | /Justin M. Cook - Reg. No. 66635/ | Date (YYYY-MM-DD) | 2012-01-04 |
| Name | Justin M. Cook | Registration Number | 66635 |

PTO/SB/130 (07-09)
Approved for use through 07/31/2012. OMB 0651- 0031
U.S. Patent and Trademark Office; U.S. DEPARTMENT OF COMMERCE
Under the Paperwork Reduction Act of 1995, no persons are required to respond to a collection of information unless it contains a valid OMB control number

# Privacy Act Statement

The Privacy Act of 1974 (P.L. 93-579) requires that you be given certain information in connection with your submission of the attached form related to a patent application or patent. Accordingly, pursuant to the requirements of the Act, please be advised that: (1) the general authority for the collection of this information is 35 U.S.C. 2(b)(2); (2) furnishing of the information solicited is voluntary; and (3) the principal purpose for which the information is used by the U.S. Patent and Trademark Office is to process and/or examine your submission related to a patent application or patent. If you do not furnish the requested information, the U.S. Patent and Trademark Office may not be able to process and/or examine your submission, which may result in termination of proceedings or abandonment of the application or expiration of the patent.

The information provided by you in this form will be subject to the following routine uses:

1. The information on this form will be treated confidentially to the extent allowed under the Freedom of Information Act (5 U.S.C. 552) and the Privacy Act (5 U.S.C. 552a). Records from this system of records may be disclosed to the Department of Justice to determine whether the Fr eedom of Information Act requires disclosure of these records.

2. A record from this system of records may be disclosed, as a routine use, in the course of presenting evidence to a court, magistrate, or administrative tribunal, including disclosures to opposing counsel in the course of settlement negotiations.

3. A record in this system of records may be disclosed, as a routine use, to a Member of Congress submitting a request involving an individual, to whom the record pertains, when the individual has requested assistance from the Member with respect to the subject matter of the record.

4. A record in this system of records may be disclosed, as a routine use, to a contractor of the Agency having need for the information in order to perform a contract. Recipients of information shall be required to comply with the requirements of the Privacy Act of 1974, as amended, pursuant to 5 U.S.C. 552a(m).

5. A record related to an International Application filed under the Patent Cooperation Treaty in this system of records may be disclosed, as a routine use, to the International Bureau of the World Intellectual Property Organization, pursuant to the Patent Cooperation Treaty.

6. A record in this system of records may be disclosed, as a routine use, to another federal agency for purposes of National Security review (35 U.S.C. 181) and for review pursuant to the Atomic Energy Act (42 U.S.C. 218(c)).

7. A record from this system of records may be disclosed, as a routine use, to the Administrator, General Services, or his/her designee, during an inspection of records conducted by GSA as part of that agency's responsibility to recommend improvements in records management practices and programs, under authority of 44 U.S.C. 2904 and 2906. Such disclosure shall be made in accordance with the GSA regulations governing inspection of records for this purpose, and any other relevant (i.e., GSA or Commerce) directive. Such disclosure shall not be used to make determinations about indivi duals.

8. A record from this system of records may be disclosed, as a routine use, to the public after either publication of the application pursuant to 35 U.S.C. 122(b) or issuance of a patent pursuant to 35 U.S.C. 151. Further, a record may be disclosed, subject to the limitations of 37 CFR 1.14, as a routine use, to the public if the record was filed in an application which became abandoned or in which the proceedings were terminated and which application is referenced by either a published application, an application open to public inspections or an issued patent.

9. A record from this system of records may be disclosed, as a routine use, to a Federal, State, or local law enforcement agency, if the USPTO becomes aware of a violation or potential violation of law or regulation.

UNITED STATES PATENT AND TRADEMARK OFFICE

Commissioner for Patents
United States Patent and Trademark Office
P.O. Box 1450
Alexandria, VA 22313-1450
www.uspto.gov

In re Application of
Leo F. Valenti

Application No. 13006948

Filed: January 14,2011

Attorney Docket No. 059686-002USPT

:
:
:DECISION ON PETITION TO MAKE SPECIAL
:UNDER 37 CFR 1.102(c)(1)
:

This is a decision on the electronic petition under 37 CFR 1.102 (c)(1), filed 04-JAN-2012 to make the above-identified application special based on applicant's age as set forth in MPEP § 708.02, Section IV.

The petition is **GRANTED**.

A grantable petition to make an application special under 37 CFR 1.102(c)(1), MPEP § 708.02, Section IV: Applicant's Age must include a statement by applicant or a registered practitioner having evidence that applicant is at least 65 years of age. No fee is required.

Accordingly, the above-identified application has been accorded "special" status and will be taken up for action by the examiner upon the completion of all pre-examination processing.

Telephone inquiries concerning this electronic decision should be directed to the Electronic Business Center at 866-217-9197.

All other inquiries concerning either the examination or status of the application should be directed to the Technology Center.

UNITED STATES PATENT AND TRADEMARK OFFICE

Commissioner for Patents
United States Patent and Trademark Office
P.O. Box 1450
Alexandria, VA 22313-1450
www.uspto.gov

**LEYDIG VOIT & MAYER, LTD**
**TWO PRUDENTIAL PLAZA, SUITE 4900**
**180 NORTH STETSON AVENUE**
**CHICAGO IL 60601-6731**

**MAILED**

APR 07 2011

**OFFICE OF PETITIONS**

In re Application of :
Theodore I. Malinin :
Application No. 13/006,949 :
Filed: January 14, 2011 :
Attorney Docket No. 706112 :
:

DECISION ON PETITION
TO MAKE SPECIAL UNDER
37 CFR 1.102(c)(1)

This is a decision on the petition under 37 CFR 1.102(c)(1), filed January 14, 2011, to make the above-identified application special based on applicant's age as set forth in M.P.E.P. § 708.02, Section IV.

The petition is **GRANTED.**

A grantable petition to make an application special under 37 CFR 1.102(c)(1) and MPEP § 708.02, Section IV: Applicant's Age must be accompanied by evidence showing that at least one of the applicants is 65 years of age, or more, such as a birth certificate or a statement by applicant. No fee is required

The instant petition includes a statement by an attorney on behalf inventor Theodore I. Malinin and a statement by the inventor attesting to his/her age. The above-identified application has been accorded "special" status.

Telephone inquiries concerning this decision should be directed to Kimberly Inabinet at 571-272-4618.

All other inquiries concerning either the examination or status of the application should be directed to the Technology Center.

The application is being forwarded to the Technology Center Art Unit 1654 for action on the merits commensurate with this decision.

/Kimberly Inabinet/

Kimberly Inabinet
Petitions Examiner
Office of Petitions

UNITED STATES PATENT AND TRADEMARK OFFICE

UNITED STATES DEPARTMENT OF COMMERCE
United States Patent and Trademark Office
Address: COMMISSIONER FOR PATENTS
P.O. Box 1450
Alexandria, Virginia 22313-1450
www.uspto.gov

| APPLICATION NO. | FILING DATE | FIRST NAMED INVENTOR | ATTORNEY DOCKET NO. | CONFIRMATION NO. |
|---|---|---|---|---|
| 13/007,189 | 01/14/2011 | Fernando A. Zayas | 2201.025US2 | 6113 |

7590 10/20/2011

SCHWEGMAN, LUNDBERG & WOESSNER, P.A.
P.O. BOX 2938
MINNEAPOLIS, MN 55402

| EXAMINER | |
|---|---|
| LINDSEY, MATTHEW S | |
| **ART UNIT** | **PAPER NUMBER** |
| 2453 | |
| **NOTIFICATION DATE** | **DELIVERY MODE** |
| 10/20/2011 | ELECTRONIC |

## DECISION GRANTING PETITION UNDER 37 CFR 1.138(d)

*The declaration of express abandonment is recognized*

This is in response to the petition under 37 CFR 1.138(d), requesting for a refund of any previously paid search fee and excess claims fee in the above-identified application.

The petition is granted.

The express abandonment is recognized. Any previously paid search fee and excess claims fee are hereby refunded.

Telephone inquiries should be directed to the Office of Data Management at (571) 272-4200.

Patent Publication Branch
Office of Data Management

UNITED STATES PATENT AND TRADEMARK OFFICE

Commissioner for Patents
United States Patent and Trademark Office
P.O. Box 1450
Alexandria, VA 22313-1450
www.uspto.gov

GEORGIA-PACIFIC LLC
133 PEACHTREE STREET NE - GA030-41
ATLANTA GA 30303

MAILED

JUL 20 2011

OFFICE OF PETITIONS

In re Application of
Goeking, et al.
Application No. 13/007,231
Filed/Deposited: 14 January 2011
Attorney Docket No. 20422P1 (GPA0033USP)

DECISION ON PETITION

This is a decision on the petition filed on 30 June, 2011, pursuant to 37 C.F.R. §1.47.

**NOTE:**

It appears that the address on the petition is other than the Correspondence Address of Record.

If Petitioner desires to receive future correspondence regarding this application, the appropriate power of attorney documentation must be submitted.

A courtesy copy of this decision will be mailed to Petitioner.

However, all future correspondence will be directed to the address of record until such time as appropriate instructions are received to the contrary.

There appears to have been delivery "left at garage" (FedEx receipt of 28 March, 2011), and on neither of two deliveries any indication of a confirmation of a valid/current/reasonably believed to be last known address—and no statement in the petition as to such or showing as to how/why Petitioner selected the address used.

Petitioner appears to have failed to satisfy or otherwise comply with the guidance in the Commentary at MPEP §409.03, and §409.03(a).

The petition as considered pursuant to 37 C.F.R. §1.47(a) is **DISMISSED**.

Rule 47 applicant is given TWO (2) MONTHS from the mailing date of this decision to reply, correcting the below-noted deficiencies. Any reply should be entitled "Request for Reconsideration of Petition Pursuant to 37 C.F.R. §1.47(a)," and should address the deficiencies

noted below, except that the reply may include an oath or declaration executed by the non-signing inventor. **FAILURE TO RESPOND WILL RESULT IN ABANDONMENT OF THE APPLICATION.** Any extensions of time will be governed by 37 C.F.R. §1.136(a).

This is **not** a final agency action within the meaning of 5 U.S.C. §704.

A grantable petition pursuant to 37 C.F.R. §1.47(a) requires: (1) petition and fee; (2) proof that the non-signing inventor cannot be reached or refuses to sign the oath or declaration after having been presented with the application papers (specification: description, claims and drawings); (3) an acceptable oath or declaration in compliance with 35 U.S.C. §§ 115 and 116; and (4) a statement of the last known address of the non-signing inventor(s)—with diligence in the effort to ascertain the validity of the address set forth as the reasonably believed to be last known/current/valid address.

Petitioner does not seem to have worked through the requirements of the petition, as set forth above, in satisfaction of those requirements. (*See, generally:* MPEP §409.03, and §409.03(a)—the applicable statute (35 U.S.C.§ 116).

***In particular, Petitioner has not as of this writing satisfied the requirement(s) of the petition as listed above and discussed below.***

*Petitioners always are reminded that for transmission by Email of any document to be accepted by the Office, written acknowledgment of receipt and readability of the message and all applicable attachments of required materials must be provided.*

## BACKGROUND

The record reflects as follows:

The application was deposited on 14 January, 2011.

On 31 January, 2011, the Office mailed a Notice of Missing Parts, indicating therein the requirement, *inter alia*, for a fully executed oath/declaration.

On 30 June, 2011, Petitioner David Arnold (Reg. No. 48,894) filed, *inter alia*, a request and fee for extension of time with a petition (with fee) pursuant to the regulations at 37 C.F.R. §1.47, an oath/declaration executed by co-inventors Messrs Cornell, Zosimadis and McNeely, for themselves and on behalf of non-signing inventor Harold Goeking (Mr. Goeking) and an averment of transmittal of the entire application (description, claims, abstract, drawings) to the non-signing inventor, but no statement in the petition of the valid/current/reasonably believed to be last known address and—in light of the statement in the materials submitted that the package was "left at garage and there being no indication of actual delivery to the non-signing inventor—

no indication of how/why the address selected was identified and so a failure to make the showing as required under the Rule (37 C.F.R. §1.47(a)) and consistent with the guidance in the Commentary at MPEP §409.03, and §409.03(a)

*Petitioners always are reminded:*

- *for transmission by Email of any document to be accepted by the Office, written acknowledgment of receipt and readability of the message and all applicable attachments of required materials must be provided; and*

- *of the duties of candor to—with requirement for diligent inquiry before—the Office and to satisfy the Rules of Practice and the guidance in the Commentary at MPEP §409.03, and §409.03(a), et seq.*

Petitioner will find it beneficial to step through the requirements of a grantable petition under 37 C.F.R. §1.47(a) (i.e., (1) petition and fee; (2) proof that the non-signing inventor cannot be reached or refuses to sign the oath or declaration after having been presented with the application papers (specification: description, claims and drawings); (3) an acceptable oath or declaration in compliance with 35 U.S.C. §§ 115 and 116; and (4) a statement of the last known address of the non-signing inventor(s)—with diligence in the effort to ascertain the validity of the address set forth as the reasonably believed to be last known/current/valid address) and satisfy himself that he has complied with these requirements on submission of any renewed petition. (*See also*: the guidance in the Commentary at MPEP §409.03, and §409.03(a), et seq.)

Again, Petitioner has not worked through the requirements of the petition.

Thus, the present incompleteness of the record makes granting of the instant petition inappropriate.

The availability of applications and application papers online to applicants/practitioners who diligently associate their Customer Number with the respective application(s) now provides an applicant/practitioner on-demand information as to events/transactions in an application. Thus, now if one wishes to know the progress in and/or status of an application or the accuracy of the data therein, one need only look at the file online.

Out of an abundance of caution, Petitioners always are reminded that those registered to practice *and* all others who make representations before the Office must inquire into the underlying facts

of representations made to the Office and support averments with the appropriate documentation–since all owe to the Office the continuing duty to disclose.[1]

The instant petition pursuant to 37 C.F.R. §1.47(a) is **dismissed**.

Further correspondence with respect to this matter should be addressed as follows:

By mail:
Mail Stop PETITIONS
Commissioner for Patents
Post Office Box 1450
Alexandria, VA 22313-1450

By hand:
Customer Service Window
Mail Stop Petitions
Randolph Building
401 Dulany Street
Alexandria, VA 22314

By FAX:
(571) 273-8300
ATTN: Office of Petitions

[1] See supplement of 17 June, 1999. The Patent and Trademark Office is relying on petitioner's duty of candor and good faith and accepting a statement made by Petitioner. See Changes to Patent Practice and Procedure, 62 Fed. Reg. at 53160 and 53178, 1203 Off. Gaz. Pat. Office at 88 and 103 (responses to comments 64 and 109)(applicant obligated under 37 C.F.R. §10.18 to inquire into the underlying facts and circumstances when providing statements to the Patent and Trademark Office). See specifically, the regulations at 37 C.F.R. §10.18.

While telephone inquiries regarding this decision may be directed to the undersigned at (571) 272-3214—it is noted, however, that all practice before the Office is in writing (see: 37 C.F.R. §1.2[2]) and the proper authority for action on any matter in this regard are the statutes (35 U.S.C.), regulations (37 C.F.R.) and the commentary on policy (MPEP). Therefore, no telephone discussion may be controlling or considered authority for Petitioner's action(s).

/John J. Gillon, Jr./
John J. Gillon, Jr.
Senior Attorney
Office of Petitions

CC:
DAVID ARNOLD
CANTOR COLBURN LLP
20 CHURCH STREET/22ND FLOOR
HARTFORD, CT 06103

[2] The regulations at 37 C.F.R. §1.2 provide:

**§1.2 Business to be transacted in writing.**

All business with the Patent and Trademark Office should be transacted in writing. The personal attendance of applicants or their attorneys or agents at the Patent and Trademark Office is unnecessary. The action of the Patent and Trademark Office will be based exclusively on the written record in the Office. No attention will be paid to any alleged oral promise, stipulation, or understanding in relation to which there is disagreement or doubt.

UNITED STATES PATENT AND TRADEMARK OFFICE

Commissioner for Patents
United States Patent and Trademark Office
P.O. Box 1450
Alexandria, VA 22313-1450
www.uspto.gov

GEORGIA-PACIFIC LLC
133 PEACHTREE STREET NE - GA030-41
ATLANTA GA 30303

MAILED

SEP 23 2011

OFFICE OF PETITIONS

In re Application of :
Goeking, et al. : DECISION ON PETITION
Application No. 13/007,231 :
Filed/Deposited: 14 January 2011 :
Attorney Docket No. 20422P1 (GPA0033USP) :

This is a decision on the petition filed on 19 September, 2011, pursuant to 37 C.F.R. §1.47.

**NOTE:**

It appears that the address on the petition is other than the Correspondence Address of Record.

If Petitioner desires to receive future correspondence regarding this application, the appropriate power of attorney documentation must be submitted.

A courtesy copy of this decision will be mailed to Petitioner.

However, all future correspondence will be directed to the address of record until such time as appropriate instructions are received to the contrary.

The petition as considered pursuant to 37 C.F.R. §1.47(a) is **DISMISSED**.

A grantable petition pursuant to 37 C.F.R. §1.47(a) requires: (1) petition and fee; (2) proof that the non-signing inventor cannot be reached or refuses to sign the oath or declaration after having been presented with the application papers (specification: description, claims and drawings); (3) an acceptable oath or declaration in compliance with 35 U.S.C. §§ 115 and 116; and (4) a statement of the last known address of the non-signing inventor(s)—with diligence in the effort to ascertain the validity of the address set forth as the reasonably believed to be last known/current/valid address.

*Petitioners always are reminded that for transmission by Email of any document to be accepted by the Office, written acknowledgment of receipt and readability of the message and all applicable attachments of required materials must be provided.*

## BACKGROUND

The record reflects as follows:

The application was deposited on 14 January, 2011.

On 31 January, 2011, the Office mailed a Notice of Missing Parts, indicating therein the requirement, *inter alia*, for a fully executed oath/declaration.

On 30 June, 2011, Petitioner David Arnold (Reg. No. 48,894) filed, *inter alia*, a request and fee for extension of time with a petition (with fee) pursuant to the regulations at 37 C.F.R. §1.47, an oath/declaration executed by co-inventors Messrs Cornell, Zosimadis and McNeely, for themselves and on behalf of non-signing inventor Harold Goeking (Mr. Goeking) and an averment of transmittal of the entire application (description, claims, abstract, drawings) to the non-signing inventor, but no statement in the petition of the valid/current/reasonably believed to be last known address and—in light of the statement in the materials submitted that the package was "left at garage and there being no indication of actual delivery to the non-signing inventor—no indication of how/why the address selected was identified and so a failure to make the showing as required under the Rule (37 C.F.R. §1.47(a)) and consistent with the guidance in the Commentary at MPEP §409.03, and §409.03(a). The petition was dismissed on 20 July, 2011.

On 19 September, 2011, Petitioner re-advanced his petition and with an averment of joinder by Mr. Goeking and inclusion of a copy of the executed oath/declaration in support thereof and in compliance with 37 C.F.R. §1.63—and so evidencing the joinder.

The availability of applications and application papers online to applicants/practitioners who diligently associate their Customer Number with the respective application(s) now provides an applicant/practitioner on-demand information as to events/transactions in an application. Thus, now if one wishes to know the progress in and/or status of an application or the accuracy of the data therein, one need only look at the file online.

Out of an abundance of caution, Petitioners always are reminded that those registered to practice *and* all others who make representations before the Office must inquire into the underlying facts

of representations made to the Office and support averments with the appropriate documentation–since all owe to the Office the continuing duty to disclose.[1]

## CONCLUSION

The instant petition under 37 C.F.R. §1.47 is **dismissed as moot for joinder**.

In view of the joinder of the inventor, further consideration under 37 C.F.R. §1.47 is not necessary. This application does not have any Rule 1.47 status and no such status should appear on the record for this file. This application should not be returned to this Office for any further consideration under 37 C.F.R. §1.47.

The instant application is released to the Office of Patent Application Processing (OPAP) for further processing in due course.

While telephone inquiries regarding this decision may be directed to the undersigned at (571) 272-3214—it is noted, however, that all practice before the Office is in writing (see: 37 C.F.R. §1.2[2]) and the proper authority for action on any matter in this regard are the statutes (35 U.S.C.), regulations (37 C.F.R.) and the commentary on policy (MPEP). Therefore, no telephone discussion may be controlling or considered authority for Petitioner's action(s).

/John J. Gillon, Jr./
John J. Gillon, Jr.
Senior Attorney
Office of Petitions

CC:
DAVID ARNOLD
CANTOR COLBURN LLP
20 CHURCH STREET/22ND FLOOR
HARFORD, CT 06103

---

[1] See supplement of 17 June, 1999. The Patent and Trademark Office is relying on petitioner's duty of candor and good faith and accepting a statement made by Petitioner. See Changes to Patent Practice and Procedure, 62 Fed. Reg. at 53160 and 53178, 1203 Off. Gaz. Pat. Office at 88 and 103 (responses to comments 64 and 109)(applicant obligated under 37 C.F.R. §10.18 to inquire into the underlying facts and circumstances when providing statements to the Patent and Trademark Office). See specifically, the regulations at 37 C.F.R. §10.18.

[2] The regulations at 37 C.F.R. §1.2 provide:

**§1.2 Business to be transacted in writing.**
All business with the Patent and Trademark Office should be transacted in writing. The personal attendance of applicants or their attorneys or agents at the Patent and Trademark Office is unnecessary. The action of the Patent and Trademark Office will be based exclusively on the written record in the Office. No attention will be paid to any alleged oral promise, stipulation, or understanding in relation to which there is disagreement or doubt.

UNITED STATES PATENT AND TRADEMARK OFFICE

Commissioner for Patents
United States Patent and Trademark Office
P.O. Box 1450
Alexandria, VA 22313-1450
www.uspto.gov

**DOWELL & DOWELL P.C.**
**103 Oronoco St.**
**Suite 220**
**Alexandria VA 22314**

MAILED
MAY 19 2011
OFFICE OF PETITIONS

In re Application of :
Andrew A. Goldenberg et al. :
Application No. 13/007,298 : DECISION ON PETITION
Filed: January 14, 2011 : TO MAKE SPECIAL UNDER
Attorney Docket No. 17511 : 37 CFR 1.102(c)(1)
:

This is a decision on the petition under 37 CFR 1.102(c)(1), filed March 24, 2011, to make the above-identified application special based on applicant's age as set forth in M.P.E.P. § 708.02, Section IV.

The petition is **GRANTED**.

A grantable petition to make an application special under 37 CFR 1.102(c)(1) and MPEP § 708.02, Section IV: Applicant's Age must be accompanied by evidence showing that at least one of the applicants is 65 years of age, or more, such as a birth certificate or a statement by applicant. No fee is required

The instant petition includes a photocopy of driver's license of inventor Andrew A. Goldenberg, attesting to his/her age. The above-identified application has been accorded "special" status.

Telephone inquiries concerning this decision should be directed to Kimberly Inabinet at 571-272-4618.

All other inquiries concerning either the examination or status of the application should be directed to the Technology Center.

The application is being forwarded to the Technology Center Art Unit 3611 for action on the merits commensurate with this decision.

/Kimberly Inabinet/

Kimberly Inabinet
Petitions Examiner
Office of Petitions

**Doc Code: PET.GREEN**
**Document Description: Petition for Green Tech Pilot**

PTO/SB/420 (11-10)
Approved for use through 01/31/2011. OMB 0651-0062
U.S. Patent and Trademark Office; U. S. DEPARTMENT OF COMMERCE
Under the Paperwork Reduction Act of 1995, no persons are required to respond to a collection of information unless it displays a valid OMB control number.

# PETITION TO MAKE SPECIAL UNDER THE GREEN TECHNOLOGY PILOT PROGRAM

| Attorney Docket Number: P3387US | Application Number (if known): | Filing date: 01/14/2011 |
|---|---|---|
| First Named Inventor: DANIEL P. COFFEY | | |
| Title: WIND ENERGY CONVERSION DEVICES | | |

**APPLICANT HEREBY REQUESTS TO PARTICIPATE IN THE GREEN TECHNOLOGY PILOT PROGRAM FOR THE ABOVE-IDENTIFIED APPLICATION. See Instruction Sheet on page 2.**

This petition must be timely filed electronically using the USPTO electronic filing system, EFS-Web.

1. By filing this petition:

   **Applicant is requesting early publication: Applicant hereby requests early publication under 37 CFR 1.219 and the publication fee set forth in 37 CFR 1.18(d) accompanies this request.**

2. By filing this petition: applicant is agreeing to make an election without traverse in a telephonic interview and elect an invention that meets the eligibility requirements for the Green Technology Pilot Program, if the Office determines that the claims are not obviously directed to a single invention. See Instruction Sheet.

3. This request is accompanied by statements of special status for the eligibility requirement.

4. The application contains no more than three (3) independent claims and twenty (20) total claims.

5. The application does not contain any multiple dependent claims.

6. Other attachments: _____

| Signature /Barry W. Sufrin/ | Date 01/14/2011 |
|---|---|
| Name (Print/Typed) Barry W. Sufrin | Registration Number 27398 |

***Note:*** *Signatures of all the inventors or assignees of record of the entire interest or their representative(s) are required in accordance with 37 CFR 1.33 and 11.18. Please see 37 CFR 1.4(d) for the form of the signature. If necessary, submit multiple forms for more than one signature see below*.*

☒ *Total of 1 forms are submitted.

The information is required to obtain or retain a benefit by the public which is to file (and by the USPTO to process) an application. Confidentiality is governed by 35 U.S.C. 122 and 37 CFR 1.11 and 1.14. This collection is estimated to take 12 hours to complete, including gathering, preparing, and submitting the completed application form to the USPTO. Time will vary depending upon the individual case. Any comments on the amount of time you require to complete this form and/or suggestions for reducing this burden, should be sent to the Chief Information Officer, U.S. Patent and Trademark Office, U.S. Department of Commerce, P.O. Box 1450, Alexandria, VA 22313-1450. DO NOT SEND FEES OR COMPLETED FORMS TO THIS ADDRESS. **SEND TO: Commissioner for Patents, P.O. Box 1450, Alexandria, VA 22313-1450.**

*If you need assistance in completing the form, call 1-800-PTO-9199 and select option 2.*

PTO/SB/420 (11-10)
Approved for use through 01/31/2011. OMB 0651-0062
U.S. Patent and Trademark Office; U. S. DEPARTMENT OF COMMERCE
Under the Paperwork Reduction Act of 1995, no persons are required to respond to a collection of information unless it displays a valid OMB control number.

# Instruction Sheet for Petition to Make Special Under the Green Technology Pilot Program

(Not to be Submitted to the USPTO)

**The following is a summary of the requirements (for more information see the notices (i) "Pilot Program for Green Technologies Including Greenhouse Gas Reduction," (ii) "Elimination of Classification Requirement in the Green Technology Pilot Program," and (iii) "Expansion and Extension of the Green Technology Pilot Program," available on the USPTO web site at http://www.uspto.gov/patents/init_events/green_tech.jsp):**

1) The application must be a non-reissue, non-provisional utility application filed under 35 U.S.C. 111 (a), or an international application that has entered the national stage in compliance with 35 U.S.C. 371, irrespective of the filing date of the application. Reexamination proceedings are excluded from this pilot program.

2) The application must contain three or fewer independent claims and twenty or fewer total claims. The application must not contain any multiple dependent claims. For an application that contains more than three independent claims or twenty total claims, or multiple dependent claims, applicant must file a preliminary amendment in compliance with 37 CFR 1.121 to cancel the excess claims and/or the multiple dependent claims at the time the petition to make special is filed.

3) The claims must be directed to a single invention that materially enhances the quality of the environment, or that materially contributes to: (1) the discovery or development of renewable energy resources; (2) the more efficient utilization and conservation of energy resources; or (3) green house gas emission reduction (see the eligibility requirements of sections II and III of the notice (i) cited above). The petition must include a statement that, if the USPTO determines that the claims are directed to multiple inventions (e.g., in a restriction requirement), applicant will agree to make an election without traverse in a telephonic interview, and elect an invention that meets the eligibility requirements in section II or III of the notice (i) cited above.

4) The petition to make special must be timely filed electronically using the USPTO electronic filing system, EFS-Web, and selecting the document description of "Petition for Green Tech Pilot" on the EFS-Web screen. Applicant should use form PTO/SB/420, which is available as a Portable Document Format (PDF) fillable form in EFS-Web and on the USPTO Web site.

5) The petition to make special must be filed at least one day prior to the date that a first Office action (which may be an Office action containing only a restriction requirement) appears in the Patent Application Information Retrieval (PAIR) system. Applicant may check the status of the application using PAIR.

6) The petition to make special must be accompanied by a request for early publication in compliance with 37 CFR 1.219 and the publication fee set forth in 37 CFR 1.18(d).

## Privacy Act Statement

The **Privacy Act of 1974 (P.L. 93-579)** requires that you be given certain information in connection with your submission of the attached form related to a patent application or patent. Accordingly, pursuant to the requirements of the Act, please be advised that: (1) the general authority for the collection of this information is 35 U.S.C. 2(b)(2); (2) furnishing of the information solicited is voluntary; and (3) the principal purpose for which the information is used by the U.S. Patent and Trademark Office is to process and/or examine your submission related to a patent application or patent. If you do not furnish the requested information, the U.S. Patent and Trademark Office may not be able to process and/or examine your submission, which may result in termination of proceedings or abandonment of the application or expiration of the patent.

The information provided by you in this form will be subject to the following routine uses:

1. The information on this form will be treated confidentially to the extent allowed under the Freedom of Information Act (5 U.S.C. 552) and the Privacy Act (5 U.S.C 552a). Records from this system of records may be disclosed to the Department of Justice to determine whether disclosure of these records is required by the Freedom of Information Act.
2. A record from this system of records may be disclosed, as a routine use, in the course of presenting evidence to a court, magistrate, or administrative tribunal, including disclosures to opposing counsel in the course of settlement negotiations.
3. A record in this system of records may be disclosed, as a routine use, to a Member of Congress submitting a request involving an individual, to whom the record pertains, when the individual has requested assistance from the Member with respect to the subject matter of the record.
4. A record in this system of records may be disclosed, as a routine use, to a contractor of the Agency having need for the information in order to perform a contract. Recipients of information shall be required to comply with the requirements of the Privacy Act of 1974, as amended, pursuant to 5 U.S.C. 552a(m).
5. A record related to an International Application filed under the Patent Cooperation Treaty in this system of records may be disclosed, as a routine use, to the International Bureau of the World Intellectual Property Organization, pursuant to the Patent Cooperation Treaty.
6. A record in this system of records may be disclosed, as a routine use, to another federal agency for purposes of National Security review (35 U.S.C. 181) and for review pursuant to the Atomic Energy Act (42 U.S.C. 218(c)).
7. A record from this system of records may be disclosed, as a routine use, to the Administrator, General Services, or his/her designee, during an inspection of records conducted by GSA as part of that agency's responsibility to recommend improvements in records management practices and programs, under authority of 44 U.S.C. 2904 and 2906. Such disclosure shall be made in accordance with the GSA regulations governing inspection of records for this purpose, and any other relevant (*i.e.*, GSA or Commerce) directive. Such disclosure shall not be used to make determinations about individuals.
8. A record from this system of records may be disclosed, as a routine use, to the public after either publication of the application pursuant to 35 U.S.C. 122(b) or issuance of a patent pursuant to 35 U.S.C. 151. Further, a record may be disclosed, subject to the limitations of 37 CFR 1.14, as a routine use, to the public if the record was filed in an application which became abandoned or in which the proceedings were terminated and which application is referenced by either a published application, an application open to public inspection or an issued patent.
9. A record from this system of records may be disclosed, as a routine use, to a Federal, State, or local law enforcement agency, if the USPTO becomes aware of a violation or potential violation of law or regulation.

**PATENT**
Attorney Docket No. P3387US

**IN THE UNITED STATES PATENT AND TRADEMARK OFFICE**

In re Application of:

Daniel P. Coffey

Application No.:

Filed: January 14, 2011

For: WIND ENERGY CONVERSION DEVICES

Confirmation No.:

Art Unit:

Examiner:

**PETITION TO MAKE SPECIAL UNDER THE GREEN TECHNOLOGY PILOT PROGRAM**

**STATEMENT OF BASIS FOR SEEKING SPECIAL STATUS**

Filed via EFS-Web
Commissioner for Patents
P.O. Box 1450
Alexandria, Virginia 22313-1450

Dear Sir:

Applicants hereby request that the present application be advanced out of order under 37 CFR §1.102 since it enhances the quality of the environment and contributes to the conservation of energy resources by materially contributing to the discovery or development of renewable energy resources. In particular, the present patent application relates to new wind turbine designs that efficiently and economically convert the kinetic energy of wind into electricity in a variety of settings including in building-laden urban areas.

As explained in the present application at paragraphs [0009] and [0010], the invention overcomes the difficulties inherent in current wind turbine technology with devices that:

(a) are extremely lightweight and subject to very low friction and inertial losses; (b) can accommodate a wide range of wind velocities and varying wind direction; (c) allow feathering of the wind-receiving blades of the device to maximize power output and reduce drag in the reverse wind portions of the turbines' rotation; (d) maximize the torque (power) produced through just-in-time sensing of wind conditions at the blades which enhance feathering control and optimally maximize torque extraction; (e) have a visually appropriate appearance and do not

generate low pressures in the vicinity of their moving blades; (f) are generally quiet in operation; (g) start up without external assistance in low winds; (h) can harness both high and low velocity winds (and address occasionally very high winds without structural failure; (i) are designed to resist centrifugal forces on turbine components; (j) can be placed atop tall buildings where the wind benefits of height and other specific conditions can be captured; (k) capture unique air currents from building-induced updraft available at skyscrapers; and (l) may be used to supply power directly via a minimal transmission distance to the very buildings onto which they are erected thereby minimizing power transmission losses of that electricity that is generated by the turbine.

The embodiments of the present invention include wind turbines with generally vertically disposed blades evenly spaced about and parallel to the vertical axis of the device which is generally perpendicular to the ground. In preferred embodiments these wind turbines, also include additional blades that are generally radially disposed about the same vertical axis (generally parallel to the ground) and generally perpendicular to that axis. Thus, all of the turbine blades drive about the same axis though they have different orientations to it. Embodiments of the invention can be located atop high-rise buildings or on free standing towers, particularly free standing towers having solid facades on their sides preferably extending the full height of the towers, or on other supporting structures. The power generated can be used to create electricity for use on location or sold back to the electrical grid.

For all of the reasons set forth above, the present invention satisfies the criteria of 37 CFR §1.102.

Respectfully submitted,

/Barry W. Sufrin/

Barry W. Sufrin, Reg. No. 27,398
DRINKER BIDDLE & REATH LLP
191 North Wacker Drive, Suite 3700
Chicago, Illinois 60606-1698
(312) 569-1000 (telephone)
(312) 569-3000 (facsimile)
Customer No.: 08968

Date: January 14, 2011
CH01/ 25662793.1

UNITED STATES PATENT AND TRADEMARK OFFICE

UNITED STATES DEPARTMENT OF COMMERCE
United States Patent and Trademark Office
Address: COMMISSIONER FOR PATENTS
P.O. Box 1450
Alexandria, Virginia 22313-1450
www.uspto.gov

| APPLICATION NO. | FILING DATE | FIRST NAMED INVENTOR | ATTORNEY DOCKET NO. | CONFIRMATION NO. |
|---|---|---|---|---|
| 13/007,311 | 01/14/2011 | Daniel P. Coffey | P3387US | 6417 |

8968 7590 04/20/2011

DRINKER BIDDLE & REATH LLP
ATTN: PATENT DOCKET DEPT.
191 N. WACKER DRIVE, SUITE 3700
CHICAGO, IL 60606

| EXAMINER | |
|---|---|
| ART UNIT | PAPER NUMBER |
| 2839 | |

| NOTIFICATION DATE | DELIVERY MODE |
|---|---|
| 04/20/2011 | ELECTRONIC |

**Please find below and/or attached an Office communication concerning this application or proceeding.**

The time period for reply, if any, is set in the attached communication.

Notice of the Office communication was sent electronically on above-indicated "Notification Date" to the following e-mail address(es):

DBRIPDocket@dbr.com
IPDockets@dbr.com

UNITED STATES PATENT AND TRADEMARK OFFICE

Commissioner for Patents
United States Patent and Trademark Office
P.O. Box 1450
Alexandria, VA 22313-1450
www.uspto.gov

DRINKER BIDDLE & REATH LLP
ATTN: PATENT DOCKET DEPT.
191 N. WACKER DRIVE, SUITE 3700
CHICAGO IL 60606

| | | |
|---|---|---|
| In re Application of | : | |
| Daniel COFFEY | : | DECISION ON PETITION |
| Application No. 13/007,311 | : | TO MAKE SPECIAL UNDER |
| Filed: January 14, 2011 | : | THE GREEN TECHNOLOGY |
| Attorney Docket No. P3387US | : | PILOT PROGRAM |

This is a decision on the petition under 37 CFR 1.102, filed on January 14, 2011, to make the above-identified application special under the pilot program for applications pertaining to Green Technologies as set forth 74 Federal Register Notice 64666 (December 8, 2009) and amended by 75 Federal Register Notice 28554 (May 21, 2010) and 75 Federal Register Notice 69049 (November 10, 2010).

The petition is **GRANTED**.

A grantable petition to make an application special under 37 CFR 1.102 and the pilot program as set forth in 74 FR 64666 must be directed to a nonprovisional application filed under 35 USC 111(a) or be a national stage entry under 35 USC 371, exclusive of any reissue applications.

In order to qualify for special status, the following requirements must be met. 1) The application must have no more than 3 independent claims and no more than 20 total claims. 2) The application must not contain any multiple dependent claims. 3) The petition must state the basis for seeking special status, i.e., the claimed invention either: A) materially enhances the quality of the environment or B) materially contributes to: i) the discovery or development of renewable energy resources, ii) the more efficient utilization and conservation of energy resources, or iii) greenhouse gas emission reduction. 4) If the disclosure is not clear on its face that the claimed invention materially contributes under category (A) or (B), the petition must be accompanied by a statement by the applicant, assignee, or an attorney/agent registered to practice before the Office explaining how the materiality standard is met. 5) A statement that applicant will agree to make an election without traverse in a telephonic interview if a restriction requirement is made by the examiner. 6) The petition to make special must be filed electronically. 7) The petition must be filed at least one day prior to the date that a first Office Action appears in the Patent Application Information Retrieval (PAIR) system. 8) The petition must be accompanied by a request for early publication in compliance with 37 CFR 1.219 and include the publication fee as set forth in 37 CFR 1.18(d).

The requirement for a fee for consideration of the petition to make special for applications pertaining to Green Technologies has been waived.

The instant petition complies with items 1 – 8 above. Accordingly, the above-identified application has been accorded "special" status.

Telephone inquires concerning this decision should be directed to Lee W. Young at 571-272-4549.

The application is being forwarded to the Technology Center Art Unit 2839 for action in its regular turn.

Lee W. Young
Quality Assurance Specialist
Technology Center 2800

**Doc Code: PPH.PCT.652**
**Document Description: Petition to make special under PCT-Patent Pros Hwy**

PTO/SB/20PCT-KR (06-10)
Approved for use through 01/31/2012. OMB 0651-0058
U.S. Patent and Trademark Office; U. S. DEPARTMENT OF COMMERCE
Under the Paperwork Reduction Act of 1995, no persons are required to respond to a collection of information unless it displays a valid OMB control number.

# REQUEST FOR PARTICIPATION IN THE PATENT COOPERATION TREATY - PATENT PROSECUTION HIGHWAY (PCT-PPH) PILOT PROGRAM BETWEEN THE KOREAN INTELLECTUAL PROPERTY OFFICE (KIPO) AND THE USPTO

| | | | |
|---|---|---|---|
| Application No: | 13/007351 | Filing date: | January 14, 2011 |
| First Named Inventor: | R. Scott Coleman | | |
| Title of the Invention: | SKI OR SNOWBOARD TEACHING APPARATUS | | |

**THIS REQUEST FOR PARTICIPATION IN THE PCT-PPH PILOT PROGRAM ALONG WITH THE REQUIRED DOCUMENTS MUST BE SUBMITTED VIA EFS-WEB. INFORMATION REGARDING EFS-WEB IS AVAILABLE AT HTTP://WWW.USPTO.GOV/EBC/EFS_HELP.HTML**

**APPLICANT HEREBY REQUESTS PARTICIPATION IN THE PCT-PPH PROGRAM AND PETITIONS TO MAKE THE ABOVE-IDENTIFIED APPLICATION SPECIAL UNDER THE PCT-PPH PROGRAM.**

The above-identified application is (1) a national stage entry of the corresponding PCT application, or (2) a national stage entry of another PCT application which claims priority to the corresponding PCT application, or (3) a national application that claims domestic/ foreign priority to the corresponding PCT application, or (4) a national application which forms the basis for the priority claim in the corresponding PCT application, or (5) a continuing application of a U.S. application that satisfies one of (1) to (4) above, or (6) a U.S. application that claims domestic benefit to a U.S. provisional application which forms the basis for the priority claim in the corresponding PCT application.

**The corresponding PCT application number(s) is/are:** PCT/US2011/021564

**The international filing date of the corresponding PCT application(s) is/are:**
18 January 2011

**I. List of Required Documents:**

a. **A copy of the latest international work product (WO/ISA, WO/IPEA, or IPER) in the above–identified corresponding PCT application(s)**

☑ Is attached.

☐ Is not attached because the document is already in the U.S. application.

b. **A copy of all claims which were indicated as having novelty, inventive step and industrial applicability in the above-identified corresponding PCT application(s).**

☑ Is attached.

☐ Is not attached because the document is already in the U.S. application.

c. **English translations of the documents in a. and b. above are attached (if the documents are not in the English language). A statement that the English translation is accurate is attached for the document in b. above.**



This collection of information is required by 35 U.S.C. 119, 37 CFR 1.55, and 37 CFR 1.102(d). The information is required to obtain or retain a benefit by the public, which is to file (and by the USPTO to process) an application. Confidentiality is governed by 35 U.S.C. 122 and 37 CFR 1.11 and 1.14. This collection is estimated to take 2 hours to complete, including gathering, preparing, and submitting the completed application form to the USPTO. Time will vary depending upon the individual case. Any comments on the amount of time you require to complete this form and/or suggestions for reducing this burden should be sent to the Chief Information Officer, U.S. Patent and Trademark Office, U.S. Department of Commerce, P.O. Box 1450, Alexandria, VA 22313-1450. DO NOT SEND FEES OR COMPLETED FORMS TO THIS ADDRESS.

PTO/SB/20PCT-KR (06-10)
Approved for use through 01/31/2012. OMB 0651-0058
U.S.Patent and Trademark Office; U.S. DEPARTMENT OF COMMERCE
Under the Paperwork Reduction Act of 1995, no persons are required to respond to a collection of information unless it displays a valid OMB control number.

# REQUEST FOR PARTICIPATION IN THE PCT-PPH PILOT PROGRAM BETWEEN THE KIPO AND THE USPTO

(continued)

| | |
|---|---|
| Application No.: | 13/007,351 |
| First Named Inventor: | R. Scott Coleman |

d. **(1) An information disclosure statement listing the documents cited in the international work products (ISR, WO/ISA, WO/IPEA, IPER) of the corresponding PCT application.**

☑ Is attached

☐ Has already been filed in the above-identified U.S. application on _____

**(2) Copies of all documents (except) for U.S. patents or U.S. patent application publications)**

☑ Are attached.

☐ Have already been filed in the above-identified U.S. application on _____

**II. Claims Correspondence Table:**

| Claims in US Application | Patentable Claims in the corresponding PCT Application | Explanation regarding the correspondence |
|---|---|---|
| 1-24 | 1-24 | They are the same |
| | | |
| | | |
| | | |
| | | |
| | | |
| | | |
| | | |
| | | |
| | | |
| | | |
| | | |
| | | |
| | | |
| | | |
| | | |
| | | |
| | | |
| | | |

**III. All the claims in the US application sufficiently correspond to the patentable claims in the corresponding PCT application.**

| | |
|---|---|
| Signature /PAUL G. JOHNSON/ | Date OCTOBER 20, 2011 |
| Name (Print/Typed) Paul G. Johnson | Registration Number 58539 |

# Privacy Act Statement

The **Privacy Act of 1974 (P.L. 93-579)** requires that you be given certain information in connection with your submission of the attached form related to a patent application or patent. Accordingly, pursuant to the requirements of the Act, please be advised that: (1) the general authority for the collection of this information is 35 U.S.C. 2(b)(2); (2) furnishing of the information solicited is voluntary; and (3) the principal purpose for which the information is used by the U.S. Patent and Trademark Office is to process and/or examine your submission related to a patent application or patent. If you do not furnish the requested information, the U.S. Patent and Trademark Office may not be able to process and/or examine your submission, which may result in termination of proceedings or abandonment of the application or expiration of the patent.

The information provided by you in this form will be subject to the following routine uses:

1. The information on this form will be treated confidentially to the extent allowed under the Freedom of Information Act (5 U.S.C. 552) and the Privacy Act (5 U.S.C 552a). Records from this system of records may be disclosed to the Department of Justice to determine whether disclosure of these records is required by the Freedom of Information Act.
2. A record from this system of records may be disclosed, as a routine use, in the course of presenting evidence to a court, magistrate, or administrative tribunal, including disclosures to opposing counsel in the course of settlement negotiations.
3. A record in this system of records may be disclosed, as a routine use, to a Member of Congress submitting a request involving an individual, to whom the record pertains, when the individual has requested assistance from the Member with respect to the subject matter of the record.
4. A record in this system of records may be disclosed, as a routine use, to a contractor of the Agency having need for the information in order to perform a contract. Recipients of information shall be required to comply with the requirements of the Privacy Act of 1974, as amended, pursuant to 5 U.S.C. 552a(m).
5. A record related to an International Application filed under the Patent Cooperation Treaty in this system of records may be disclosed, as a routine use, to the International Bureau of the World Intellectual Property Organization, pursuant to the Patent Cooperation Treaty.
6. A record in this system of records may be disclosed, as a routine use, to another federal agency for purposes of National Security review (35 U.S.C. 181) and for review pursuant to the Atomic Energy Act (42 U.S.C. 218(c)).
7. A record from this system of records may be disclosed, as a routine use, to the Administrator, General Services, or his/her designee, during an inspection of records conducted by GSA as part of that agency's responsibility to recommend improvements in records management practices and programs, under authority of 44 U.S.C. 2904 and 2906. Such disclosure shall be made in accordance with the GSA regulations governing inspection of records for this purpose, and any other relevant ( *i.e.*, GSA or Commerce) directive. Such disclosure shall not be used to make determinations about individuals.
8. A record from this system of records may be disclosed, as a routine use, to the public after either publication of the application pursuant to 35 U.S.C. 122(b) or issuance of a patent pursuant to 35 U.S.C. 151. Further, a record may be disclosed, subject to the limitations of 37 CFR 1.14, as a routine use, to the public if the record was filed in an application which became abandoned or in which the proceedings were terminated and which application is referenced by either a published application, an application open to public inspection or an issued patent.
9. A record from this system of records may be disclosed, as a routine use, to a Federal, State, or local law enforcement agency, if the USPTO becomes aware of a violation or potential violation of law or regulation.

UNITED STATES PATENT AND TRADEMARK OFFICE

Commissioner for Patents
United States Patent and Trademark Office
P.O. Box 1450

MAILED
JAN 18 2012
OFFICE OF PETITIONS

**Maschoff Gilmore & Israelsen**
**1441 W. Ute Blvd., Suite 100**
**Park City UT 84098-7633**

In re Application of
R. Scott COLEMAN et al.
Application No. 13/007,351
Filed: January 14, 2011
Atty. Docket No.: H1092.10001US02
For: SKI OR SNOWBOARD TEACHING APPARATUS

: DECISION ON REQUEST TO
: PARTICIPATE IN PCT-PPH PROGRAM
: AND PETITION TO MAKE SPECIAL
: UNDER 37 CFR 1.102(a)

This is a decision on the request to participate in the PCT Patent Prosecution Highway (PCT-PPH) program and the petition under 37 CFR 1.102(a), filed October 20, 2011, to make the above-identified application special.

The request is **GRANTED**.

A grantable request to participate in the PCT –PPH program and petition to make special under 37 CFR 1.102(a) require:

(1) the U.S. application must have an eligible relationship to one or more PCT application where the ISA or IPEA are the JPO, EPO, KIPO, IPAU, Russia, Spain, Finland, Austria, or USPTO;

(2) at least one claim in the PCT application has novelty, inventive step, and industrial applicability and must be free of any observations in Box VIII in the latest work product in the international stage or applicant must identify and explain why the claim(s) is/are not subject to the observation in Box VIII;

(3) applicant must submit a copy of the claim(s) from the PCT application(s) that have novelty, inventive step, and industrial applicability along with an English translation thereof and a statement that the English translation is accurate, if the claims are not in the English language;

(4) all the claims in the U.S. application must sufficiently correspond or be amended to sufficiently correspond to the claim(s) that have novelty, inventive step, and industrial applicability in the PCT application(s);

(5) examination of the U.S. application has not begun;

(6) applicant must submit a copy of the latest international work product from the PCT application indicating that the claim(s) have novelty, inventive step, and industrial applicability along with an English translation thereof;

(7) applicant must submit an IDS listing the documents cited by the PCT examiner in the international work product along with copies of documents except U.S. patents or U.S. patent application publications; and

(8) applicant is required to submit a claims correspondence table in English which indicates how all the claims in the U.S. application correspond to the claims indicated as having novelty, inventive step, and industrial applicability in the latest international work product.

The request to participate in the PCT-PPH program and petition comply with the above requirements. Accordingly, the above-identified application has been accorded "special" status.

Telephone inquiries concerning this decision should be directed to Robert DeWitty, Petitions Attorney, Office of Petitions (571-272-8427). All other inquiries concerning the examination or status of the application is accessible in the PAIR system at http://www.uspto.gov/ebc.index.html.

This application will be forwarded to Technology Center Art Unit 3715 for action on the merits commensurate with this decision once the application's formality reviews have been completed.

David Bucci
Petitions Examiner
Office of Petitions

Doc Code: PET.GREEN
Document Description: Petition for Green Tech Pilot

PTO/SB/420 (03-11)

# PETITION TO MAKE SPECIAL UNDER THE GREEN TECHNOLOGY PILOT PROGRAM

| Attorney Docket Number: 247312_1 | Application Number (if known): 13/007382 | Filing date: 01-14-2011 |
|---|---|---|

First Named Inventor: James Humphrie Rochford

Title: SYSTEM AND METHOD FOR MAGNETIZATION OF RARE-EARTH PERMANENT MAGNETS

**APPLICANT HEREBY REQUESTS TO PARTICIPATE IN THE GREEN TECHNOLOGY PILOT PROGRAM FOR THE ABOVE-IDENTIFIED APPLICATION. See Instruction Sheet on page 2.**

This petition must be timely filed electronically using the USPTO electronic filing system, EFS-Web.

1. By filing this petition:

   **Applicant is requesting early publication: Applicant hereby requests early publication under 37 CFR 1.219 and the publication fee set forth in 37 CFR 1.18(d) accompanies this request.**

2. By filing this petition: applicant is agreeing to make an election without traverse in a telephonic interview and elect an invention that meets the eligibility requirements for the Green Technology Pilot Program, if the Office determines that the claims are not obviously directed to a single invention. See Instruction Sheet.

3. This request is accompanied by statements of special status for the eligibility requirement.

4. The application contains no more than three (3) independent claims and twenty (20) total claims.

5. The application does not contain any multiple dependent claims.

6. Other attachments: Statement Concerning the Basis for the Special Status

| Signature /Allison W. Mages/ | Date May 31, 2011 |
|---|---|
| Name (Print/Typed) Allison W. Mages | Registration Number 57,275 |

*Note: Signatures of all the inventors or assignees of record of the entire interest or their representative(s) are required in accordance with 37 CFR 1.33 and 11.18. Please see 37 CFR 1.4(d) for the form of the signature. If necessary, submit multiple forms for more than one signature, see below*.*

☐ *Total of _____ forms are submitted.

*If you need assistance in completing the form, call 1-800-PTO-9199 and select option 2.*

**IN THE UNITED STATES PATENT AND TRADEMARK OFFICE**

| | |
|---|---|
| **First Named Inventor: James Humphrie Rochford** | ) |
| **Confirmation No.: 6575** | ) |
| | ) |
| **Serial No.: 13/007382** | ) |
| | ) |
| **Filing Date: 01-14-2011** | ) |
| | ) |
| **Atty Docket No.: 247312_1** | ) |

Commissioner for Patents
P.O. Box 1450
Alexandria, VA 22313-1450

**Statement Concerning the Basis for the Special Status**

SIR:

Applicant respectfully submits that Special Status is sought on the basis that the present invention materially contributes to the development of renewable energy resources or energy conservation.

The undersigned attorney may be contacted at the number below to facilitate the resolution of any matters. Please charge any fees that are incurred in connection with this Statement to deposit account no. 09-0470.

Respectfully submitted,

General Electric Company

By : /Allison W. Mages/
Allison W. Mages
Reg. No. 57,275

Dated: May 31, 2011

GE Global Patent Operation
2 Corporate Drive, Suite 648
Shelton, CT 06484
203-944-6730

UNITED STATES PATENT AND TRADEMARK OFFICE

UNITED STATES DEPARTMENT OF COMMERCE
United States Patent and Trademark Office
Address: COMMISSIONER FOR PATENTS
P.O. Box 1450
Alexandria, Virginia 22313-1450
www.uspto.gov

| APPLICATION NO. | FILING DATE | FIRST NAMED INVENTOR | ATTORNEY DOCKET NO. | CONFIRMATION NO. |
|---|---|---|---|---|
| 13/007,382 | 01/14/2011 | James Humphrie Rochford | 247312-1(GERD:0972/RAR) | 6575 |

6147 7590 06/14/2011

GENERAL ELECTRIC COMPANY
GLOBAL RESEARCH
ONE RESEARCH CIRCLE
BLDG. K1-3A59
NISKAYUNA, NY 12309

| EXAMINER | |
|---|---|
| ENAD, ELVIN GENARGUE | |
| ART UNIT | PAPER NUMBER |
| 2832 | |

| NOTIFICATION DATE | DELIVERY MODE |
|---|---|
| 06/14/2011 | ELECTRONIC |

**Please find below and/or attached an Office communication concerning this application or proceeding.**

The time period for reply, if any, is set in the attached communication.

Notice of the Office communication was sent electronically on above-indicated "Notification Date" to the following e-mail address(es):

ldocket@crd.ge.com
rosssr@ge.com
wahld@ge.com

UNITED STATES PATENT AND TRADEMARK OFFICE

Commissioner for Patents
United States Patent and Trademark Office
P.O. Box 1450
Alexandria, VA 22313-1450
www.uspto.gov

GENERAL ELECTRIC COMPANY
GLOBAL RESEARCH
ONE RESEARCH CIRCLE
BLDG. K1-3A59
NISKAYUNA NY 12309

| | | |
|---|---|---|
| In re Application of | : | |
| ROCHFORD et al. | : | DECISION ON PETITION |
| Application No. 13/007,382 | : | TO MAKE SPECIAL UNDER |
| Filed January 14, 2011 | : | THE GREEN TECHNOLOGY |
| Attorney Docket No. 247312-1(GERD:0972/RAR) | : | PILOT PROGRAM |

This is a decision on the petition under 37 CFR 1.102, filed on June 03, 2011, to make the above-identified application special under the pilot program for applications pertaining to Green Technologies as set forth 74 Federal Register Notice 64666 (December 8, 2009) and amended by 75 Federal Register Notice 28554 (May 21, 2010) and 75 Federal Register Notice 69049 (November 10, 2010).

The petition is **DISMISSED**.

If reconsideration of this decision is desired, a petition for reconsideration must be filed within ONE (1) MONTH OR THIRTY (30) DAYS from the mail date of this decision, whichever is longer. No extension of this time limit can be granted under 37 CFR 1.136(a) or (b). The petition for reconsideration should include an exhaustive attempt to provide the lacking item(s) noted below, since, after a decision on the petition for reconsideration, no further reconsideration or review of the matter will be undertaken by the Director.

A grantable petition to make an application special under 37 CFR 1.102 and the pilot program as set forth in 74 FR 64666 must be directed to a nonprovisional application filed under 35 USC 111(a) or be a national stage entry under 35 USC 371, exclusive of any reissue applications and be filed prior to the date of the notice, December 8, 2009.

In order to qualify for special status, the following requirements must be met. 1) The application must have no more than 3 independent claims and no more than 20 total claims. 2) The application must not contain any multiple dependent claims. 3) The petition must state the basis for seeking special status, i.e., the claimed invention either: A) materially enhances the quality of the environment or B) materially contributes to: i) the discovery or development of renewable energy resources, ii) the more efficient utilization and conservation of energy resources, or iii) greenhouse gas emission reduction. 4) If the disclosure is not clear on its face that the claimed invention materially contributes under category (A) or (B), the petition must be accompanied by

a statement by the applicant, assignee, or an attorney/agent registered to practice before the Office explaining how the materiality standard is met. 5) A statement that applicant will agree to make an election without traverse in a telephonic interview if a restriction requirement is made by the examiner. 6) The petition to make special must be filed electronically. 7) The petition must be filed at least one day prior to the date that a first Office Action appears in the Patent Application Information Retrieval (PAIR) system. 8) The petition must be accompanied by a request for early publication in compliance with 37 CFR 1.219 and include the publication fee as set forth in 37 CFR 1.18(d).

The requirement for a fee for consideration of the petition to make special for applications pertaining to Green Technologies has been waived.

The petition lacks item 4.

In regard to item 4, applicant's statement pertaining to how the materiality standard is met does not satisfy the requirements for this pilot. The petition alleges that the claimed invention contributes to the discovery or development of renewable energy resources and to more efficient utilization and conservation of energy. The claims are not directed to renewable energy resources. The materiality standard does not permit an applicant to speculate as to how a hypothetical end-user might specially apply the invention in a manner that could contribute to the discovery or development of renewable energy resources. Any argument that the claimed invention can be used with renewable energy resourced is considered speculate as to how a hypothetical end-user might specially apply the claimed invention. Further, it is not readily apparent how the claimed invention contributes to more efficient utilization and conservation of energy.

Any reconsideration of this decision should be submitted through the USPTO electronic filing system, EFS-Web, and selecting the document description of "Petition for Green Tech Pilot" on the EFS-Web screen.

Telephone inquiries concerning this decision should be directed to Lee W. Young at 571-272-4549.

The application is being forwarded to the Technology Center Art Unit 2832 for action in its regular turn.

Lee W. Young
Quality Assurance Specialist
Technology Center 2800

**IN THE UNITED STATES PATENT AND TRADEMARK OFFICE**

| | |
|---|---|
| **First Named Inventor: James Humphrie ROCHFORD** | ) |
| **Confirmation No.: 6575** | ) |
| | ) |
| **Serial No.: 13/007,382** | ) |
| | ) |
| **Filing Date: 01/14/2011** | ) |
| | ) |
| **Atty Docket No.: 247312-1** | ) |

Commissioner for Patents
P.O. Box 1450
Alexandria, VA 22313-1450

**Request for Reconsideration**

SIR:

This is responsive to the Decision on Petition, dated as mailed June 14, 2011, in the above referenced application.

Applicant respectfully requests reconsideration of Applicant's Petition to Make Special on the basis that the present invention materially contributes to the development of renewable energy resources or energy conservation, and/or that the present invention materially contributes to the reduction of greenhouse gas emissions.

The Decision to Make Special Under the Green Technology Pilot Program (hereinafter "the Decision") alleges that the claims are not directed to renewal energy resources. The Decision further alleges that any argument that the claimed invention can be used with renewable energy resources is considered speculative as to how a hypothetical end-user might specially apply the claimed invention. Finally, the decision alleges that it is not readily apparent how the

claimed invention contributes to more efficient utilization and conservation of energy. Applicant does not agree with the comments made in the Decision.

Applicant respectfully submits that the present subject matter relates generally to the magnetization of permanent magnets, more particularly, to the magnetization of magnets disposed within cylindrical structures using one or more superconducting materials. (see at least paragraph [0001]).

Electric Motors are considered to be a clean, environmentally friendly technology. Electric Motors are utilized in numerous applications that promote energy conservation, such as electric vehicles and wind turbines. However, the availability of electric motor technology heavily depends on the cost/benefit economics of electric motors. As such, it is important that the cost of producing electric motors, including manufacture of the motor components, cannot outweigh the benefits.

Many electrical machines include one or more electric motors. Such electric motors typically include a rotor having permanent magnets disposed within the bulk of the rotor. During rotation, the rotor, having the permanent magnets, produces a rotating magnetic field that interacts with a stator. This electromagnetic interaction results in the conversion of electromagnetic energy into mechanical motion that drives the machine. (see at least paragraph [0002]).

Two approaches are typically used for the assembly of rotors having permanent magnets. In one approach, shaped materials are magnetized to generate the permanent magnets before they are disposed within the bulk of the rotor. This approach may present several drawbacks. For instance, fully

magnetized permanent magnet pieces can be subject to electromagnetic interaction with any surrounding objects, such as other adjacent or proximate magnets, which in turn adds to the complexity of their handling procedures and insertion into the rotor. In a second approach, the shaped materials are first disposed within the rotor and a magnetizer is used to magnetize the permanent magnets. Such an approach is typically referred to as an in-situ magnetization process. (see at least paragraph [0003]).

The second approach can also present several drawbacks. To name a few, the energy and fabrication costs for conventional resistive magnetizers capable of generating a sufficient magnetic field flux for the magnetization process can be prohibitive. For example, some in-situ magnetizers are able to produce small magnetic fields sufficient only to magnetize small permanent magnets made of certain materials or grades (e.g., alnico and ferrite) that have low intrinsic coercivity (i.e., materials that can be easily demagnetized). However, many emerging applications for permanent magnet electric machines, such as wind turbine applications, or traction (e.g., magnetic bearing and braking) applications, would benefit from the use of high-coercivity rare-earth permanent magnet materials, which can often require strong magnetic fields. Moreover, as the permanent magnets increase in size, their magnetization becomes increasingly difficult due to inadequate field penetration produced by typical magnetizers. It should therefore be appreciated that due to physical constraints in addition to economic considerations, the in-situ magnetization of such materials is typically very difficult to deliver with conventional restive

systems. Accordingly, it is now recognized that a need exists for a magnetizer capable of magnetizing rare-earth, high-coercivity materials in an efficient manner. (see at least paragraph [0004]).

Embodiments disclosed herein provide a superconducting magnetizer assembly. The assembly includes a coil pack having an inner coil including a first superconducting magnet material, the coil being configured to generate a first magnetic field in response to an electric current supplied to the coil, and an outer coil including a second superconducting magnet material, the outer coil being disposed about the inner coil and being configured to generate a second magnetic field in response to an electric current supplied to the outer coil. The coil pack also includes a container configured to house the inner and the outer coils. (see at least the Abstract of the Disclosure)

Embodiments of the present invention materially contribute to the development of renewable energy by facilitating production of electric motor components in an efficient manner. Specifically, the embodiments described in the present invention create magnets disposed within cylindrical structures using one or more superconducting materials in a less expensive manner than previous approaches. The above described magnets are highly desirable to use in electric motors, in bearing and braking mechanisms and in wind turbine applications. As such, these measures promote investment in electric motor and/or wind turbine technology by making it a more cost-effective alternative to high greenhouse gas emission energy technologies. In turn, this effectively

promotes increased energy production and also contributes to the reduction of greenhouse gas emissions.

The undersigned attorney may be contacted at the number below to facilitate the resolution of any matters. Please charge any fees that are incurred in connection with this Statement to deposit account no. 09-0470.

Respectfully submitted,

General Electric Company

By: /Allison W Mages/
Allison Weiner Mages
Reg. No. 57,275

Dated: July 14, 2011

GE Global Patent Operation
2 Corporate Drive, Suite 648
Shelton, CT 06484
203-944-6755

UNITED STATES PATENT AND TRADEMARK OFFICE

UNITED STATES DEPARTMENT OF COMMERCE
United States Patent and Trademark Office
Address: COMMISSIONER FOR PATENTS
P.O. Box 1450
Alexandria, Virginia 22313-1450
www.uspto.gov

| APPLICATION NO. | FILING DATE | FIRST NAMED INVENTOR | ATTORNEY DOCKET NO. | CONFIRMATION NO. |
|---|---|---|---|---|
| 13/007,382 | 01/14/2011 | James Humphrie Rochford | 247312-1(GERD:0972/RAR) | 6575 |

6147 7590 08/05/2011

GENERAL ELECTRIC COMPANY
GLOBAL RESEARCH
ONE RESEARCH CIRCLE
BLDG. K1-3A59
NISKAYUNA, NY 12309

| EXAMINER | |
|---|---|
| ENAD, ELVIN GENARGUE | |

| ART UNIT | PAPER NUMBER |
|---|---|
| 2832 | |

| NOTIFICATION DATE | DELIVERY MODE |
|---|---|
| 08/05/2011 | ELECTRONIC |

**Please find below and/or attached an Office communication concerning this application or proceeding.**

The time period for reply, if any, is set in the attached communication.

Notice of the Office communication was sent electronically on above-indicated "Notification Date" to the following e-mail address(es):

ldocket@crd.ge.com
wahld@ge.com
haeckl@ge.com

UNITED STATES PATENT AND TRADEMARK OFFICE

Commissioner for Patents
United States Patent and Trademark Office
P.O. Box 1450
Alexandria, VA 22313-1450
www.uspto.gov

8/5/11

GENERAL ELECTRIC COMPANY
GLOBAL RESEARCH
ONE RESEARCH CIRCLE
BLDG. K1-3A59
NISKAYUNA NY 12309

| | | |
|---|---|---|
| In re Application of | : | |
| Rochford et al. | : | DECISION ON PETITION |
| Application No. 13/007,382 | : | TO MAKE SPECIAL UNDER |
| Filed: 1/14/2011 | : | THE GREEN TECHNOLOGY |
| Attorney Docket No. **247312-1(GERD:0972/RAR)** | : | PILOT PROGRAM |

This is a decision on the request for reconsideration, filed 7/14/2011, to make the above-identified application special under the pilot program for applications pertaining to Green Technologies as set forth 74 Federal Register Notice 64666 (December 8, 2009).

The petition is **DENIED**.

A grantable petition to make an application special under 37 CFR 1.102 and the pilot program as set forth in 74 FR 64666 must be directed to a nonprovisional application filed under 35 USC 111(a) or be a national stage entry under 35 USC 371, exclusive of any reissue applications and be filed prior to the date of the notice, December 8, 2009.

In order to qualify for special status, the following requirements must be met. 1) The application must be classified in one of the eligible US classifications listed in section VI of the notice. 2) The application must have no more than 3 independent claims and no more than 20 total claims. 3) The application must not contain any multiple dependent claims. 4) The petition must state the basis for seeking special status, i.e., the claimed invention either: A) materially enhances the quality of the environment or B) materially contributes to: i) the discovery or development of renewable energy resources, ii) the more efficient utilization and conservation of energy resources, or iii) greenhouse gas emission reduction. 5) If the disclosure is not clear on its face that the claimed invention materially contributes under category (A) or (B), the petition must be accompanied by a statement by the applicant, assignee, or an attorney/agent registered to practice before the Office explaining how the materiality standard is met. 6) A statement that applicant will agree to make an election without traverse in a telephonic interview if a restriction requirement is made by the examiner. 7) The petition to make special must be filed electronically. 8) The petition must be filed at least one day prior to the date that a first Office

Action appears in the Patent Application Information Retrieval (PAIR) system. 9) The petition must be accompanied by a request for early publication in compliance with 37 CFR 1.219 and include the publication fee as set forth in 37 CFR 1.18(d).

The requirement for a fee for consideration of the petition to make special for applications pertaining to Green Technologies has been waived.

The petition lacks item(s) 4.

In regard to item 4, petitioner should note that the instant petition includes a statement identifying the basis for the special status (i.e., whether the instant invention (1) materially enhances the quality of the environment or materially contributes to (2) development of renewable energy resources or energy conservation, or (3) greenhouse gas reduction) as required by sections II and III of the notice. However, as stated in the notice, applicant must also provide a statement pertaining to the materiality standard if the application disclosure is not clear on its face as to the materiality of the basis for the special status of the invention. It is not agreed that the application on its face meets that materiality standard. Applicants argue that the instant subject matter is directed to the magnetization of magnets. It is further argued that electric motors are considered to be a clean technology and they are used in numerous applications that promote energy conservation, such as electric vehicles and wind turbines. The instant claims however are merely directed to a superconducting magnetizer assembly. There is no mention of electric motors or wind turbines in the instant claimed invention. The materiality standard does not permit an applicant to speculate how an end user might specifically apply the invention in a manner that could materially contribute to (1) materially enhancing the quality of the environment or materially contributing to (2) development of renewable energy resources or energy conservation, or (3) greenhouse gas reduction.

Any reconsideration of this decision should be submitted through the USPTO electronic filing system, EFS-Web, and selecting the document description of "Petition for Green Tech Pilot" on the EFS-Web screen.

Telephone inquiries concerning this decision should be directed to Tom Dunn at 571-272-1171.

The application is being forwarded to the Technology Center Art Unit 2832 for action in its regular turn.

/Tom Dunn/

Tom Dunn
Quality Assurance Specialist
Technology Center 1700

UNITED STATES PATENT AND TRADEMARK OFFICE

UNITED STATES DEPARTMENT OF COMMERCE
United States Patent and Trademark Office
Address: COMMISSIONER FOR PATENTS
P.O. Box 1450
Alexandria, Virginia 22313-1450
www.uspto.gov

| APPLICATION NO. | FILING DATE | FIRST NAMED INVENTOR | ATTORNEY DOCKET NO. | CONFIRMATION NO. |
|---|---|---|---|---|
| 13/007,386 | 01/14/2011 | Tomonori Sakaguchi | SUTOSH.758AUS | 6585 |

7590 11/25/2011

KNOBBE MARTENS OLSON & BEAR LLP
2040 MAIN STREET
FOURTEENTH FLOOR
IRVINE, CA 92614

| EXAMINER | |
|---|---|
| VU, KIEU D | |

| ART UNIT | PAPER NUMBER |
|---|---|
| 2173 | |

| NOTIFICATION DATE | DELIVERY MODE |
|---|---|
| 11/25/2011 | ELECTRONIC |

## DECISION GRANTING PETITION UNDER 37 CFR 1.138(d)

*The declaration of express abandonment is recognized*

This is in response to the petition under 37 CFR 1.138(d), requesting for a refund of any previously paid search fee and excess claims fee in the above-identified application.

The petition is granted.

The express abandonment is recognized. Any previously paid search fee and excess claims fee are hereby refunded.

Telephone inquiries should be directed to the Office of Data Management at (571) 272-4200.

Betty Powell

Patent Publication Branch
Office of Data Management

UNITED STATES PATENT AND TRADEMARK OFFICE

UNITED STATES DEPARTMENT OF COMMERCE
United States Patent and Trademark Office
Address: COMMISSIONER FOR PATENTS
P.O. Box 1450
Alexandria, Virginia 22313-1450
www.uspto.gov

| APPLICATION NO. | FILING DATE | FIRST NAMED INVENTOR | ATTORNEY DOCKET NO. | CONFIRMATION NO. |
|---|---|---|---|---|
| 13/007,426 | 01/14/2011 | Mitsuhiko OBARA | SUTOSH.761AUS | 6680 |

20995 7590 09/30/2011

KNOBBE MARTENS OLSON & BEAR LLP
2040 MAIN STREET
FOURTEENTH FLOOR
IRVINE, CA 92614

| EXAMINER | |
|---|---|
| ART UNIT | PAPER NUMBER |
| 2422 | |

| NOTIFICATION DATE | DELIVERY MODE |
|---|---|
| 09/30/2011 | ELECTRONIC |

**Please find below and/or attached an Office communication concerning this application or proceeding.**

The time period for reply, if any, is set in the attached communication.

Notice of the Office communication was sent electronically on above-indicated "Notification Date" to the following e-mail address(es):

jcartee@kmob.com
efiling@kmob.com
eOAPilot@kmob.com

UNITED STATES PATENT AND TRADEMARK OFFICE

Commissioner for Patents
United States Patent and Trademark Office
P.O. Box 1450
Alexandria, VA 22313-1450
www.uspto.gov

Knobbe Martens Olson & Bear LLP
2040 Main Street
Fourteenth Floor
Irvine CA 92614

In re Application of: Obara
Application No. 13/007426
Filed: January 14, 2011
For: Electronic Apparatus and Method of Presetting Reception Channel

DECISION ON REQUEST TO PARTICIPATE IN PATENT PROSECUTION HIGHWAY PROGRAM AND PETITION TO MAKE SPECIAL UNDER 37 CFR 1.102(a)

This is a decision on the request to participate in the Patent Prosecution Highway (PPH) program and the petition under 37 CFR 1.102(a), filed September 14, 2011, to make the above-identified application special.

The petition is **GRANTED.**

A grantable request to participate in the PPH program and petition to make special require:

1. The U.S. application for which participation in the PPH program is requested and the corresponding JPO application must have the same priority/filing date;

2. Applicant must submit a copy of:
   a. The allowable/patentable claim(s) from the JPO application(s);
   b. An English translation of the allowable/patentable claim(s); and
   c. A statement that the English translation is accurate;

3. Applicant must
   a. Ensure all the claims in the U.S. application must sufficiently correspond or be amended to sufficiently correspond to one or more of those claims indicated as allowable/patentable claim(s) in the JPO application(s);
   b. Note that claims are considered to "sufficiently correspond" where, accounting for differences due to translations and claim format, the claims in the USPTO are of the same or similar scope as the claims in the JPO, or the claims in the USPTO are narrower in scope than the claims in the JPO. In this regard, a claim that is narrower in scope occurs when a JPO claim is amended to be further limited by an additional feature that is supported in the specification (description and/or claims). A claim in the USPTO which introduces a new/different category of claims to those claims indicated as allowable in the JPO is not considered to sufficiently correspond. For example, if the JPO claims only contain claims to a process of manufacturing a product, then the claims in the USPTO are not considered to sufficiently correspond if the

USPTO claims introduce product claims that are dependent on the corresponding process claims; and

c. Submit a claims correspondence table in English;

4. Examination of the U.S. application has not begun;

5. Applicant must submit:
   a. Documentation of prior office action:
      i. a copy of the office action(s) just prior to the "Decision to Grant a Patent" from each of the JPO application(s) containing the allowable/patentable claim(s) or
      ii. if the allowable/patentable claims(s) are from a "Notification of Reasons for Refusal" then the Notification of Reasons for Refusal or
      iii. if the JPO application is a first action allowance then no office action from the JPO is necessary should be indicated on the request/petition form;
   b. An English language translation of the JPO Office action from (5)(a)(i)-(ii) above
   c. A statement that the English translation is accurate (if the translation is not a machine translation provided by the JPO);

6. Applicant must submit:
   a. An IDS listing the documents cited by the JPO examiner in the JPO office action (unless already submitted in this application)
   b. Copies of the documents except U.S. patents or U.S. patent application publications (unless already submitted in this application);

The request to participate in the PPH program and petition are found to comply with the above requirements. Accordingly, the above-identified application has been accorded "special" status.

Telephone inquiries concerning this decision should be directed to Tod Swann at 571-272-3612.

All other inquiries concerning the examination or status of the application is accessible in the PAIR system at http://www.uspto.gov/ebc/index.html.

The application is being forwarded to the examiner for action on the merits commensurate with this decision.

/Tod Swann/
Tod Swann
Quality Assurance Specialist
Technology Center 2400

UNITED STATES PATENT AND TRADEMARK OFFICE

Commissioner for Patents
United States Patent and Trademark Office
P.O. Box 1450
Alexandria, VA 22313-1450
www.uspto.gov

KILPATRICK TOWNSEND & STOCKTON LLP
TWO EMBARCADERO CENTER
EIGHTH FLOOR
SAN FRANCISCO CA 94111-3834

MAILED
AUG 04 2011
OFFICE OF PETITIONS

In re Application of
William E. Clemenson, et al.
Application No. 13/007,537
Filed: January 14, 2011
Attorney Docket No. 026626-000111US

DECISION ON PETITION
TO WITHDRAW
FROM RECORD

This is a decision on the Request to Withdraw as attorney or agent of record under 37 C.F.R. § 1.36(b), filed June 23, 2011.

The request is **APPROVED**.

A grantable request to withdraw as attorney/agent of record must be signed by every attorney/agent seeking to withdraw or contain a clear indication that one attorney is signing on behalf of another/others

The request was signed by David A. Hall on behalf of all attorneys of record who are associated with customer No. 20350. 20l attorneys/agents associated with the Customer Number 20350 have been withdrawn. Applicant is reminded that there is no attorney of record at this time.

The correspondence address of record has been changed and the new correspondence address is the address indicated below.

There are no pending Office actions at the present time.

Telephone inquiries concerning this decision should be directed to undersigned at 571-272-1642. All other inquiries concerning the examination or status of this application should be directed to the Technology Center.

/AMW/
April M. Wise
Petitions Examiner
Office of Petitions

cc: HTS, LLC
11450 GAYLEY AVENUE
SUITE 303
LOS ANGELES, CA 90024

UNITED STATES PATENT AND TRADEMARK OFFICE

UNITED STATES DEPARTMENT OF COMMERCE
United States Patent and Trademark Office
Address: COMMISSIONER FOR PATENTS
P.O. Box 1450
Alexandria, Virginia 22313-1450
www.uspto.gov

| APPLICATION NUMBER | FILING OR 371(C) DATE | FIRST NAMED APPLICANT | ATTY. DOCKET NO./TITLE |
|---|---|---|---|
| 13/007,537 | 01/14/2011 | William E. Clemenson | 026626-000111US |

**CONFIRMATION NO. 6905**

**POWER OF ATTORNEY NOTICE**

20350
KILPATRICK TOWNSEND & STOCKTON LLP
TWO EMBARCADERO CENTER
EIGHTH FLOOR
SAN FRANCISCO, CA 94111-3834

Date Mailed: 08/03/2011

## NOTICE REGARDING CHANGE OF POWER OF ATTORNEY

This is in response to the Power of Attorney filed 06/23/2011.

- The withdrawal as attorney in this application has been accepted. Future correspondence will be mailed to the new address of record. 37 CFR 1.33.

/amwise/

Office of Data Management, Application Assistance Unit (571) 272-4000, or (571) 272-4200, or 1-888-786-0101

UNITED STATES PATENT AND TRADEMARK OFFICE

UNITED STATES DEPARTMENT OF COMMERCE
United States Patent and Trademark Office
Address: COMMISSIONER FOR PATENTS
P.O. Box 1450
Alexandria, Virginia 22313-1450
www.uspto.gov

| APPLICATION NO. | FILING DATE | FIRST NAMED INVENTOR | ATTORNEY DOCKET NO. | CONFIRMATION NO. |
|---|---|---|---|---|
| 13/007,612 | 01/15/2011 | Fred Charles Sands | 24367-8 | 7070 |

33417 7590 02/17/2011

LEWIS, BRISBOIS, BISGAARD & SMITH LLP
221 NORTH FIGUEROA STREET
SUITE 1200
LOS ANGELES, CA 90012

| EXAMINER | |
|---|---|
| BUI, DUNG H | |

| ART UNIT | PAPER NUMBER |
|---|---|
| 1775 | |

| MAIL DATE | DELIVERY MODE |
|---|---|
| 02/17/2011 | PAPER |

**Please find below and/or attached an Office communication concerning this application or proceeding.**

The time period for reply, if any, is set in the attached communication.

UNITED STATES PATENT AND TRADEMARK OFFICE

Commissioner for Patents
United States Patent and Trademark Office
P.O. Box 1450
Alexandria, VA 22313-1450
www.uspto.gov

2/17/2011

CST

In re application of :
Fred Charles Sand et al :
Serial No. 13/007,612 : DECISION ON PETITION
Filed: January 15, 2011 : TO MAKE SPECIAL
For: JET ENGINE PROTECTION SYSTEM :

This is a decision on the petition filed on January 15, 2011 to make the above-identified application special under the accelerated examination program.

The petition to make the application special is **DENIED.**

REGULATION AND PRACTICE

To be eligible for accelerated examination under 37 C.F.R. § 1.102(d) and pursuant to the "Changes to Practice for Petitions in Patent Applications to Make Special and for Accelerated Examination" published in the Federal Register on June 26, 2006 (71 Fed. Reg. 36323), the following conditions must be satisfied:

1. The application must be a non-reissue utility or design application filed under 37 CFR 1.111(a);
2. The application, the petition and the required fees must be filed electronically using the USPTO's electronic filing system (EFS), or EFS-web; if not filed electronically, a statement asserting that EFS and EFS-web were not available during the normal business hours;
3. The application, at the time of filing, must be complete under 37 CFR 1.51 and in condition for examination;
4. The application must contain three or fewer independent claims and twenty or fewer total claims and the claims must be directed to a single invention.

The application as filed is not eligible for accelerated examination under 37 C.F.R. § 1.102(d) because it was not complete and in condition for examination, at the time of filing. Specifically, MPEP 708.02(a), section VIII, C11, requires that no preliminary

amendments be present on the filing date of the application. Note that a preliminary amendment, cancelling claims 17-20, was filed on January 15, 2011, the filing date of this application.

For the above-stated reasons, the petition is denied. The application will therefore be taken up by the examiner for action in its regular turn.

Any inquiry regarding this decision should be directed to Christine Tierney, Quality Assurance Specialist, at (571) 272-1055.

/Christine Tierney/

Christine Tierney
Quality Assurance Specialist
Technology Center 1700

**Doc Code: PET.GREEN**
**Document Description: Petition for Green Tech Pilot**

PTO/SB/420 (11-10)
Approved for use through 01/31/2011. OMB 0651-0062
U.S. Patent and Trademark Office; U. S. DEPARTMENT OF COMMERCE
Under the Paperwork Reduction Act of 1995, no persons are required to respond to a collection of information unless it displays a valid OMB control number.

# PETITION TO MAKE SPECIAL UNDER THE GREEN TECHNOLOGY PILOT PROGRAM

| Attorney Docket Number: | Application Number (if known): | Filing date: January 15, 2011 |
|---|---|---|
| First Named Inventor: Vyacheslav Zavadsky | | |
| Title: Household appliance adapted to work with time of use electricity rates | | |

**APPLICANT HEREBY REQUESTS TO PARTICIPATE IN THE GREEN TECHNOLOGY PILOT PROGRAM FOR THE ABOVE-IDENTIFIED APPLICATION. See Instruction Sheet on page 2.**

This petition must be timely filed electronically using the USPTO electronic filing system, EFS-Web.

1. By filing this petition:

   **Applicant is requesting early publication: Applicant hereby requests early publication under 37 CFR 1.219 and the publication fee set forth in 37 CFR 1.18(d) accompanies this request.**

2. By filing this petition: applicant is agreeing to make an election without traverse in a telephonic interview and elect an invention that meets the eligibility requirements for the Green Technology Pilot Program, if the Office determines that the claims are not obviously directed to a single invention. See Instruction Sheet.

3. This request is accompanied by statements of special status for the eligibility requirement.

4. The application contains no more than three (3) independent claims and twenty (20) total claims.

5. The application does not contain any multiple dependent claims.

6. Other attachments: _____

| Signature /Zavadsky/ | Date Jan 15, 2011 |
|---|---|
| Name (Print/Typed) V. Zavadsky | Registration Number |

***Note:*** *Signatures of all the inventors or assignees of record of the entire interest or their representative(s) are required in accordance with 37 CFR 1.33 and 11.18. Please see 37 CFR 1.4(d) for the form of the signature. If necessary, submit multiple forms for more than one signature see below*.*

☒ *Total of 2 forms are submitted.

The information is required to obtain or retain a benefit by the public which is to file (and by the USPTO to process) an application. Confidentiality is governed by 35 U.S.C. 122 and 37 CFR 1.11 and 1.14. This collection is estimated to take 12 hours to complete, including gathering, preparing, and submitting the completed application form to the USPTO. Time will vary depending upon the individual case. Any comments on the amount of time you require to complete this form and/or suggestions for reducing this burden, should be sent to the Chief Information Officer, U.S. Patent and Trademark Office, U.S. Department of Commerce, P.O. Box 1450, Alexandria, VA 22313-1450. DO NOT SEND FEES OR COMPLETED FORMS TO THIS ADDRESS. **SEND TO: Commissioner for Patents, P.O. Box 1450, Alexandria, VA 22313-1450.**

*If you need assistance in completing the form, call 1-800-PTO-9199 and select option 2.*

PTO/SB/420 (11-10)
Approved for use through 01/31/2011. OMB 0651-0062
U.S. Patent and Trademark Office; U. S. DEPARTMENT OF COMMERCE
Under the Paperwork Reduction Act of 1995, no persons are required to respond to a collection of information unless it displays a valid OMB control number.

# Instruction Sheet for Petition to Make Special Under the Green Technology Pilot Program

(Not to be Submitted to the USPTO)

**The following is a summary of the requirements (for more information see the notices (i) "Pilot Program for Green Technologies Including Greenhouse Gas Reduction," (ii) "Elimination of Classification Requirement in the Green Technology Pilot Program," and (iii) "Expansion and Extension of the Green Technology Pilot Program," available on the USPTO web site at http://www.uspto.gov/patents/init_events/green_tech.jsp):**

1) The application must be a non-reissue, non-provisional utility application filed under 35 U.S.C. 111 (a), or an international application that has entered the national stage in compliance with 35 U.S.C. 371, irrespective of the filing date of the application. Reexamination proceedings are excluded from this pilot program.

2) The application must contain three or fewer independent claims and twenty or fewer total claims. The application must not contain any multiple dependent claims. For an application that contains more than three independent claims or twenty total claims, or multiple dependent claims, applicant must file a preliminary amendment in compliance with 37 CFR 1.121 to cancel the excess claims and/or the multiple dependent claims at the time the petition to make special is filed.

3) The claims must be directed to a single invention that materially enhances the quality of the environment, or that materially contributes to: (1) the discovery or development of renewable energy resources; (2) the more efficient utilization and conservation of energy resources; or (3) green house gas emission reduction (see the eligibility requirements of sections II and III of the notice (i) cited above). The petition must include a statement that, if the USPTO determines that the claims are directed to multiple inventions (e.g., in a restriction requirement), applicant will agree to make an election without traverse in a telephonic interview, and elect an invention that meets the eligibility requirements in section II or III of the notice (i) cited above.

4) The petition to make special must be timely filed electronically using the USPTO electronic filing system, EFS-Web, and selecting the document description of "Petition for Green Tech Pilot" on the EFS-Web screen. Applicant should use form PTO/SB/420, which is available as a Portable Document Format (PDF) fillable form in EFS-Web and on the USPTO Web site.

5) The petition to make special must be filed at least one day prior to the date that a first Office action (which may be an Office action containing only a restriction requirement) appears in the Patent Application Information Retrieval (PAIR) system. Applicant may check the status of the application using PAIR.

6) The petition to make special must be accompanied by a request for early publication in compliance with 37 CFR 1.219 and the publication fee set forth in 37 CFR 1.18(d).

## Privacy Act Statement

The **Privacy Act of 1974 (P.L. 93-579)** requires that you be given certain information in connection with your submission of the attached form related to a patent application or patent. Accordingly, pursuant to the requirements of the Act, please be advised that: (1) the general authority for the collection of this information is 35 U.S.C. 2(b)(2); (2) furnishing of the information solicited is voluntary; and (3) the principal purpose for which the information is used by the U.S. Patent and Trademark Office is to process and/or examine your submission related to a patent application or patent. If you do not furnish the requested information, the U.S. Patent and Trademark Office may not be able to process and/or examine your submission, which may result in termination of proceedings or abandonment of the application or expiration of the patent.

The information provided by you in this form will be subject to the following routine uses:

1. The information on this form will be treated confidentially to the extent allowed under the Freedom of Information Act (5 U.S.C. 552) and the Privacy Act (5 U.S.C 552a). Records from this system of records may be disclosed to the Department of Justice to determine whether disclosure of these records is required by the Freedom of Information Act.
2. A record from this system of records may be disclosed, as a routine use, in the course of presenting evidence to a court, magistrate, or administrative tribunal, including disclosures to opposing counsel in the course of settlement negotiations.
3. A record in this system of records may be disclosed, as a routine use, to a Member of Congress submitting a request involving an individual, to whom the record pertains, when the individual has requested assistance from the Member with respect to the subject matter of the record.
4. A record in this system of records may be disclosed, as a routine use, to a contractor of the Agency having need for the information in order to perform a contract. Recipients of information shall be required to comply with the requirements of the Privacy Act of 1974, as amended, pursuant to 5 U.S.C. 552a(m).
5. A record related to an International Application filed under the Patent Cooperation Treaty in this system of records may be disclosed, as a routine use, to the International Bureau of the World Intellectual Property Organization, pursuant to the Patent Cooperation Treaty.
6. A record in this system of records may be disclosed, as a routine use, to another federal agency for purposes of National Security review (35 U.S.C. 181) and for review pursuant to the Atomic Energy Act (42 U.S.C. 218(c)).
7. A record from this system of records may be disclosed, as a routine use, to the Administrator, General Services, or his/her designee, during an inspection of records conducted by GSA as part of that agency's responsibility to recommend improvements in records management practices and programs, under authority of 44 U.S.C. 2904 and 2906. Such disclosure shall be made in accordance with the GSA regulations governing inspection of records for this purpose, and any other relevant (*i.e.*, GSA or Commerce) directive. Such disclosure shall not be used to make determinations about individuals.
8. A record from this system of records may be disclosed, as a routine use, to the public after either publication of the application pursuant to 35 U.S.C. 122(b) or issuance of a patent pursuant to 35 U.S.C. 151. Further, a record may be disclosed, subject to the limitations of 37 CFR 1.14, as a routine use, to the public if the record was filed in an application which became abandoned or in which the proceedings were terminated and which application is referenced by either a published application, an application open to public inspection or an issued patent.
9. A record from this system of records may be disclosed, as a routine use, to a Federal, State, or local law enforcement agency, if the USPTO becomes aware of a violation or potential violation of law or regulation.

**Doc Code: PET.GREEN**
**Document Description: Petition for Green Tech Pilot**

PTO/SB/420 (11-10)
Approved for use through 01/31/2011. OMB 0651-0062
U.S. Patent and Trademark Office; U. S. DEPARTMENT OF COMMERCE
Under the Paperwork Reduction Act of 1995, no persons are required to respond to a collection of information unless it displays a valid OMB control number.

# PETITION TO MAKE SPECIAL UNDER THE GREEN TECHNOLOGY PILOT PROGRAM

| Attorney Docket Number: | Application Number (if known): | Filing date: January 15, 2011 |
|---|---|---|
| First Named Inventor: Vyacheslav Zavadsky | | |
| Title: | | |

**APPLICANT HEREBY REQUESTS TO PARTICIPATE IN THE GREEN TECHNOLOGY PILOT PROGRAM FOR THE ABOVE-IDENTIFIED APPLICATION. See Instruction Sheet on page 2.**

This petition must be timely filed electronically using the USPTO electronic filing system, EFS-Web.

1. By filing this petition:

   **Applicant is requesting early publication: Applicant hereby requests early publication under 37 CFR 1.219 and the publication fee set forth in 37 CFR 1.18(d) accompanies this request.**

2. By filing this petition: applicant is agreeing to make an election without traverse in a telephonic interview and elect an invention that meets the eligibility requirements for the Green Technology Pilot Program, if the Office determines that the claims are not obviously directed to a single invention. See Instruction Sheet.

3. This request is accompanied by statements of special status for the eligibility requirement.

4. The application contains no more than three (3) independent claims and twenty (20) total claims.

5. The application does not contain any multiple dependent claims.

6. Other attachments: _____

| Signature /Mykola Sherstyuk/ | Date Jan 15, 2011 |
|---|---|
| Name (Print/Typed) Mykola Sherstyuk | Registration Number |

***Note:*** *Signatures of all the inventors or assignees of record of the entire interest or their representative(s) are required in accordance with 37 CFR 1.33 and 11.18. Please see 37 CFR 1.4(d) for the form of the signature. If necessary, submit multiple forms for more than one signature see below*.*

☒ *Total of 2 forms are submitted.

The information is required to obtain or retain a benefit by the public which is to file (and by the USPTO to process) an application. Confidentiality is governed by 35 U.S.C. 122 and 37 CFR 1.11 and 1.14. This collection is estimated to take 12 hours to complete, including gathering, preparing, and submitting the completed application form to the USPTO. Time will vary depending upon the individual case. Any comments on the amount of time you require to complete this form and/or suggestions for reducing this burden, should be sent to the Chief Information Officer, U.S. Patent and Trademark Office, U.S. Department of Commerce, P.O. Box 1450, Alexandria, VA 22313-1450. DO NOT SEND FEES OR COMPLETED FORMS TO THIS ADDRESS. **SEND TO: Commissioner for Patents, P.O. Box 1450, Alexandria, VA 22313-1450.**

*If you need assistance in completing the form, call 1-800-PTO-9199 and select option 2.*

PTO/SB/420 (11-10)
Approved for use through 01/31/2011. OMB 0651-0062
U.S. Patent and Trademark Office; U. S. DEPARTMENT OF COMMERCE
Under the Paperwork Reduction Act of 1995, no persons are required to respond to a collection of information unless it displays a valid OMB control number.

# Instruction Sheet for Petition to Make Special Under the Green Technology Pilot Program

(Not to be Submitted to the USPTO)

**The following is a summary of the requirements (for more information see the notices (i) "Pilot Program for Green Technologies Including Greenhouse Gas Reduction," (ii) "Elimination of Classification Requirement in the Green Technology Pilot Program," and (iii) "Expansion and Extension of the Green Technology Pilot Program," available on the USPTO web site at http://www.uspto.gov/patents/init_events/green_tech.jsp):**

1) The application must be a non-reissue, non-provisional utility application filed under 35 U.S.C. 111 (a), or an international application that has entered the national stage in compliance with 35 U.S.C. 371, irrespective of the filing date of the application. Reexamination proceedings are excluded from this pilot program.

2) The application must contain three or fewer independent claims and twenty or fewer total claims. The application must not contain any multiple dependent claims. For an application that contains more than three independent claims or twenty total claims, or multiple dependent claims, applicant must file a preliminary amendment in compliance with 37 CFR 1.121 to cancel the excess claims and/or the multiple dependent claims at the time the petition to make special is filed.

3) The claims must be directed to a single invention that materially enhances the quality of the environment, or that materially contributes to: (1) the discovery or development of renewable energy resources; (2) the more efficient utilization and conservation of energy resources; or (3) green house gas emission reduction (see the eligibility requirements of sections II and III of the notice (i) cited above). The petition must include a statement that, if the USPTO determines that the claims are directed to multiple inventions (e.g., in a restriction requirement), applicant will agree to make an election without traverse in a telephonic interview, and elect an invention that meets the eligibility requirements in section II or III of the notice (i) cited above.

4) The petition to make special must be timely filed electronically using the USPTO electronic filing system, EFS-Web, and selecting the document description of "Petition for Green Tech Pilot" on the EFS-Web screen. Applicant should use form PTO/SB/420, which is available as a Portable Document Format (PDF) fillable form in EFS-Web and on the USPTO Web site.

5) The petition to make special must be filed at least one day prior to the date that a first Office action (which may be an Office action containing only a restriction requirement) appears in the Patent Application Information Retrieval (PAIR) system. Applicant may check the status of the application using PAIR.

6) The petition to make special must be accompanied by a request for early publication in compliance with 37 CFR 1.219 and the publication fee set forth in 37 CFR 1.18(d).

## Privacy Act Statement

The **Privacy Act of 1974 (P.L. 93-579)** requires that you be given certain information in connection with your submission of the attached form related to a patent application or patent. Accordingly, pursuant to the requirements of the Act, please be advised that: (1) the general authority for the collection of this information is 35 U.S.C. 2(b)(2); (2) furnishing of the information solicited is voluntary; and (3) the principal purpose for which the information is used by the U.S. Patent and Trademark Office is to process and/or examine your submission related to a patent application or patent. If you do not furnish the requested information, the U.S. Patent and Trademark Office may not be able to process and/or examine your submission, which may result in termination of proceedings or abandonment of the application or expiration of the patent.

The information provided by you in this form will be subject to the following routine uses:

1. The information on this form will be treated confidentially to the extent allowed under the Freedom of Information Act (5 U.S.C. 552) and the Privacy Act (5 U.S.C 552a). Records from this system of records may be disclosed to the Department of Justice to determine whether disclosure of these records is required by the Freedom of Information Act.
2. A record from this system of records may be disclosed, as a routine use, in the course of presenting evidence to a court, magistrate, or administrative tribunal, including disclosures to opposing counsel in the course of settlement negotiations.
3. A record in this system of records may be disclosed, as a routine use, to a Member of Congress submitting a request involving an individual, to whom the record pertains, when the individual has requested assistance from the Member with respect to the subject matter of the record.
4. A record in this system of records may be disclosed, as a routine use, to a contractor of the Agency having need for the information in order to perform a contract. Recipients of information shall be required to comply with the requirements of the Privacy Act of 1974, as amended, pursuant to 5 U.S.C. 552a(m).
5. A record related to an International Application filed under the Patent Cooperation Treaty in this system of records may be disclosed, as a routine use, to the International Bureau of the World Intellectual Property Organization, pursuant to the Patent Cooperation Treaty.
6. A record in this system of records may be disclosed, as a routine use, to another federal agency for purposes of National Security review (35 U.S.C. 181) and for review pursuant to the Atomic Energy Act (42 U.S.C. 218(c)).
7. A record from this system of records may be disclosed, as a routine use, to the Administrator, General Services, or his/her designee, during an inspection of records conducted by GSA as part of that agency's responsibility to recommend improvements in records management practices and programs, under authority of 44 U.S.C. 2904 and 2906. Such disclosure shall be made in accordance with the GSA regulations governing inspection of records for this purpose, and any other relevant (*i.e.*, GSA or Commerce) directive. Such disclosure shall not be used to make determinations about individuals.
8. A record from this system of records may be disclosed, as a routine use, to the public after either publication of the application pursuant to 35 U.S.C. 122(b) or issuance of a patent pursuant to 35 U.S.C. 151. Further, a record may be disclosed, subject to the limitations of 37 CFR 1.14, as a routine use, to the public if the record was filed in an application which became abandoned or in which the proceedings were terminated and which application is referenced by either a published application, an application open to public inspection or an issued patent.
9. A record from this system of records may be disclosed, as a routine use, to a Federal, State, or local law enforcement agency, if the USPTO becomes aware of a violation or potential violation of law or regulation.

UNITED STATES PATENT AND TRADEMARK OFFICE

UNITED STATES DEPARTMENT OF COMMERCE
United States Patent and Trademark Office
Address: COMMISSIONER FOR PATENTS
P.O. Box 1450
Alexandria, Virginia 22313-1450
www.uspto.gov

| APPLICATION NO. | FILING DATE | FIRST NAMED INVENTOR | ATTORNEY DOCKET NO. | CONFIRMATION NO. |
|---|---|---|---|---|
| 13/007,617 | 01/15/2011 | Vyacheslav Zavadsky | | 7079 |

11170 7590 02/24/2011

Vyacheslav Zavadsky
33-3205 Uplands Drive
Ottawa, ON K1V9T3
CANADA

| EXAMINER | |
|---|---|
| ART UNIT | PAPER NUMBER |
| 2836 | |

| NOTIFICATION DATE | DELIVERY MODE |
|---|---|
| 02/24/2011 | ELECTRONIC |

**Please find below and/or attached an Office communication concerning this application or proceeding.**

The time period for reply, if any, is set in the attached communication.

Notice of the Office communication was sent electronically on above-indicated "Notification Date" to the following e-mail address(es):

zavadsky@gmail.com

UNITED STATES PATENT AND TRADEMARK OFFICE

Commissioner for Patents
United States Patent and Trademark Office
P.O. Box 1450
Alexandria, VA 22313-1450
www.uspto.gov

Vyacheslav Zavadsky
33-3205 Uplands Drive
Ottawa ON K1V9T-3 CA CANADA

| | | |
|---|---|---|
| In re Application of | : | |
| ZAVADSKY et al. | : | DECISION ON PETITION |
| Application No. 13/007,617 | : | TO MAKE SPECIAL UNDER |
| Filed: January 15, 2011 | : | THE GREEN TECHNOLOGY |
| Attorney Docket No. N/A | : | PILOT PROGRAM |

This is a decision on the petition under 37 CFR 1.102, filed on January 15, 2011, to make the above-identified application special under the pilot program for applications pertaining to Green Technologies as set forth 74 Federal Register Notice 64666 (December 8, 2009) and amended by 75 Federal Register Notice 28554 (May 21, 2010) and 75 Federal Register Notice 69049 (November 10, 2010).

The petition is **DISMISSED**.

If reconsideration of this decision is desired, a petition for reconsideration must be filed within ONE (1) MONTH OR THIRTY (30) DAYS from the mail date of this decision, whichever is longer. No extension of this time limit can be granted under 37 CFR 1.136(a) or (b). The petition for reconsideration should include an exhaustive attempt to provide the lacking item(s) noted below, since, after a decision on the petition for reconsideration, no further reconsideration or review of the matter will be undertaken by the Director.

A grantable petition to make an application special under 37 CFR 1.102 and the pilot program as set forth in 74 FR 64666 must be directed to a nonprovisional application filed under 35 USC 111(a) or be a national stage entry under 35 USC 371, exclusive of any reissue applications and be filed prior to the date of the notice, December 8, 2009.

In order to qualify for special status, the following requirements must be met. 1) The application must have no more than 3 independent claims and no more than 20 total claims. 2) The application must not contain any multiple dependent claims. 3) The petition must state the basis for seeking special status, i.e., the claimed invention either: A) materially enhances the quality of the environment or B) materially contributes to: i) the discovery or development of renewable energy resources, ii) the more efficient utilization and conservation of energy resources, or iii) greenhouse gas emission reduction. 4) If the disclosure is not clear on its face that the claimed invention materially contributes under category (A) or (B), the petition must be accompanied by a statement by the applicant, assignee, or an attorney/agent registered to practice before the Office explaining how the materiality standard is met. 5) A statement that applicant will agree to

make an election without traverse in a telephonic interview if a restriction requirement is made by the examiner. 6) The petition to make special must be filed electronically. 7) The petition must be filed at least one day prior to the date that a first Office Action appears in the Patent Application Information Retrieval (PAIR) system. 8) The petition must be accompanied by a request for early publication in compliance with 37 CFR 1.219 and include the publication fee as set forth in 37 CFR 1.18(d).

The requirement for a fee for consideration of the petition to make special for applications pertaining to Green Technologies has been waived.

The petition lacks item 4.

In regard to item 4, applicant's statement pertaining to how the materiality standard is met does not satisfy the requirements for this pilot. The claimed invention is directed to shifting energy demand to reduce cost. The shifting of energy demand does not equate to more efficient utilization and conservation of energy. Further, the materiality standard does not permit an applicant to speculate as to how a hypothetical end-user might specially apply the invention in a manner that could contribute to a green technology. Any argument that the claimed invention promotes renewable energy is considered speculate as to how a hypothetical end-user might specially apply the claimed invention.

Any reconsideration of this decision should be submitted through the USPTO electronic filing system, EFS-Web, and selecting the document description of "Petition for Green Tech Pilot" on the EFS-Web screen.

Telephone inquiries concerning this decision should be directed to Lee W. Young at 571-272-4549.

The application is being forwarded to the Technology Center Art Unit 2836 for action in its regular turn.

Lee W. Young
Quality Assurance Specialist
Technology Center 2800

**In the United States Patent and Trademark office**

Application # 13/007,617

Filing Date: 01/15/2011

Inventors: Vyacheslav Zavadsky and Mykola Sherstyuk

Appn Title: Household appliance adapted to work with time of use electricity rates

Examiner: TBA

Art unit: 2836

**Re: Green technology accelerated examination program,**
**request for reconsideration for petition to make special**

Commissioner for Patents

P.O. Box 1450

Alexandria, VA 22313-1450

Sir:

In response to the "Decision on petition to make special under the green technology pilot program", dated Feb 24, 2011, applicants respectfully traverse the reasons for the decision and requests favourable reconsideration.

The decision alleges that petition lacks item (4), in particular, although the invention is directed towards shifting energy demand to reduce costs it does not equates with more efficient utilization and conservation of energy.

The applicants respectfully disagree.

Applying the concept of the "invisible hand of the market", also known in the economics as the efficient resources allocation theorem, one skilled in the art will see that once the technology will be available (demand shifting) and and economic and pricing mechanism will exists (pre-existing time of use rate structure and the invention enabling cost efficient demand shifting); the market will allocate the resource with more efficient utilization. That will enable both more efficient utilization of the existing energy resources and more development of renewable energy resources as they will become more economically viable. Applicant submits that economic and market

forces are material and change of behaviour of the market participants in the case of change of technology and/or pricing is not a speculation.

Further, applicants would like to refer to the "Pacific Northwest GridWise demonstation project", undertaken by the Pacific Northwest National Laboratory using funding by US Department of Energy. The summary information about the project can be found at http://gridwise.pnl.gov/docs/pnnl_gridwiseoverview.pdf and attached to this response. During the project, equipment enabling demand shifting in response to economic incentives was installed. The project showed that limited demand shifting technology used in this project reduced peak load by 15%, obviously causing more efficient utilization of available energy resources. If it would not be the case, the project simple would not be funded by US department of energy. By analogy, market forces would cause more demand for non-demand driven, renewable energy sources.

Applicants submit that now petition is accompanied by the statement satisfying requirement 4).

For all the reasons above applicants submit that the petition is now perfected and satisfy all the requirements of the green technology pilot program and specifically 3.(B).i and 3.(B).ii.

Very respectfully,
/Vyacheslav Zavadsky/

Vyacheslav Zavadsky
33-3205 Uplands Drive,
Ottawa, ON, K1V9T3

Science.

Technology.

Innovation.

# GridWise™ Demonstration Project Fast Facts

## Program Objectives

Pacific Northwest National Laboratory teamed up with regional utilities and industry partners in the year-long Pacific Northwest GridWise™ Demonstration Project to test the notion that smart grid technologies and consumers can play an active role in managing the grid. The project, funded by the Department of Energy, involved homeowners in two separate studies to test demand-response concepts and technologies designed to maximize the electric grid's ability to provide reliable, affordable and clean energy.

The Grid Friendly™ Appliance Project demonstrated that everyday household appliances can automatically reduce energy consumption at critical moments when they are fitted with controllers that sense stress on the grid. The Olympic Peninsula Project found homeowners are willing to adjust their individual energy use based on price signals provided via information technology tools. Both studies helped reduce pressure on the grid during times of peak demand.

The study found that there are no technical hurdles standing in the way of wide-scale adoption of Grid Friendly(tm) Appliance controller and the automated technologies for demand response that were tested. With wide-scale adoption of these technologies, stress on the grid can be mitigated to prevent power outages during grid emergencies. Additionally, these technologies will help integrate renewable energy onto the grid and are projected to reduce the need to build about $70 billion (over a 20-year period) of new generation, transmission and distribution systems.

## Program Background

- The GridWise Demonstration Project consisted of two separate demand-response studies—The Grid Friendly Appliance Project and Olympic Peninsula Project.
- Data was collected from March 2006–March 2007.
- Pacific Northwest National Laboratory managed the GridWise Demonstration Project.
- The project was funded by the U.S. Department of Energy.
- The demonstration projects included the following partners: Bonneville Power Administration, PacifiCorp, Portland General Electric, the City of Port Angeles and Clallam County PUD #1.
- Large, in-kind contributions from industrial collaborators include appliances from Whirlpool Corp., and real-time event software and analytics developed by IBM Research.

## Advantages

- Demand-response technologies can help enhance the reliability of the grid by instantly reducing demand when the balance of supply and demand is at risk. A more reliable power grid can prevent the economic impact of power failure.
- An interactive grid management system could lead to smaller electricity bills for consumers—they use less electricity and help alleviate the need for additional infrastructure to meet growing demand for electricity, especially at peak periods.
- Demand-response technologies can help accommodate the intermittent nature of renewable resources like wind power, making it possible to more effectively manage their integration into the electric grid

**For more information, contact:**

Pacific Northwest National Laboratory
P.O. Box 999, K1-39
Richland, WA 99352
1-888-375-PNNL (7665)
Internet: www.pnl.gov
E-mail: inquiry@pnl.gov

December 2007 PNNL-SA-XXXXX

Pacific Northwest National Laboratory

Operated by Battelle for the U.S. Department of Energy

# The Olympic Peninsula Project

## Background

- The Olympic Peninsula GridWise Demonstration looked at how consumers responded to real-time energy pricing information.
- The experiment provides insights into how customers might adjust their energy consumption based on changes in price
- The study also gave customers the choice of purchasing electricity through a variety of contract types ranging from today's fixed price contracts to real-time prices that changed as often as every five minutes.
- Automated control technology was installed to allow industrial, municipal, and residential customers to reduce their electricity consumption during times of peak demand or when prices are high and demand response was automated.
- Smart appliances, including thermostats, water heaters and clothes dryers were installed in 112 residential homes.
- Residential consumers could choose their balance between comfort and economy, and always had the option to override their initial settings.
- A virtual, real-time, two-way market with real cash incentives was established to reflect the actual costs of producing and delivering electricity and motivated consumers to reduce their electricity consumption at times of peak demand.
- Internet-based event-driven software from IBM Research created virtual thermostats and water heaters that could translate between market prices and device settings, and also enabled the devices to submit market bids and react to changing prices.
- Existing backup generators for commercial customers were used to displace additional demand for electricity and produce power locally the few occasions prices got above their preset tolerable limits.

## Results

- The Olympic Peninsula Project demonstrated that an Internet-based network coordinating demand response can save consumers money on power, and reduce peak load on the grid by approximately 15 percent over the course of one year.
- A significant number of customers, including residential consumers, will sign up for and respond to a real-time price that varies on a five-minute interval when they are provided computer-based technology that automates their response and preserves their right to choose their preference for comfort or savings.
- On average, consumers saved approximately 10 percent on electricity bills from the year prior.
- A combination of demand response and distributed generation reduced peak distribution loads by 50 percent for days.
- The project demonstrated that utility-dispatched demand response can alleviate the need to build expensive new infrastructure to address constraints on the distribution or transmission system during times of peak demand.
- The project successfully managed a "virtual" distribution line, or feeder, and an imposed feeder constraint for an entire year using these innovative technologies
- The technologies and approach proved technically feasible, wide-scale adoption is more limited by regulations than technical limitations.

## Implications

- The technology used in the Olympic Peninsula Project was capable of making very short-term (~5 minute) adjustments in consumption where the impact of customer comfort is negligible and cost is low.
- For homes being served by real-time market contracts, the automation also had to read and respond to temperatures and settings, as well as market trends and customer price-sensitivity, and be able to convert device settings to and from market bids and price signals.
- Calling upon reductions in demand is much less expensive for utilities and cleaner than ramping power plants up and down to follow load fluctuations. This capability has the potential to help manage the intermittent nature of wind power, helping increase its use in the future.
- If all customers were engaged in reducing peak loads at this level, peak electricity prices would be substantially reduced and construction of about $70B (over a 20 year period) of new generation, transmission and distribution systems could be avoided, with the savings passed along to ratepayers.

# Grid Friendly Appliance Project

## Background

- The GFA controller is a small electronic circuit board that detects when the electricity grid becomes stressed and could benefit from short-term load reduction (~1-2 minutes).
- The GFA controller was configured to react to the alternating current (AC) frequency signals at residential wall outlets.
- Decreased AC frequency signals acute stress on the power grid.
- When the GFA controller senses decreased AC frequency it automatically prompts appliances to modify operations to reduce demand for electricity and therefore help rebalance supply and demand on the electric grid.
- Demand was reduced by automatically turning off some of the appliances' functions (i.e. turning off the heating elements in specially programmed dryers and water heaters) for a few seconds or minutes).
- The GFAC was installed in 150 dryers and water heaters in homes in Yakima, Wash.; Portland, Ore.; and the Olympic Peninsula in Washington.
- The dryers in the study were commercially available Sears/Kenmore units modified to include the Grid Friendly appliance controller.

## Results

- It is technically feasible to use GFA controllers to manage contingencies on the grid and prevent power outages.
- Consumers in the study reported they were not inconvenienced, and generally did not even notice the automatic reduction in their energy use (in hundreds of events).
- Most homeowners stated they would be willing to purchase an appliance configured with such grid-responsive controls.

## Implications

- The GFA controller acts as a 'shock absorber' for the system by reducing power to dryers, refrigerators, water heaters and other home appliances in times of extreme stress on the power grid.
- Up to 20 percent of the nations power usage could be put on hold if GFA controllers were installed in all compatible appliances.

UNITED STATES PATENT AND TRADEMARK OFFICE

UNITED STATES DEPARTMENT OF COMMERCE
United States Patent and Trademark Office
Address: COMMISSIONER FOR PATENTS
P.O. Box 1450
Alexandria, Virginia 22313-1450
www.uspto.gov

| APPLICATION NO. | FILING DATE | FIRST NAMED INVENTOR | ATTORNEY DOCKET NO. | CONFIRMATION NO. |
|---|---|---|---|---|
| 13/007,617 | 01/15/2011 | Vyacheslav Zavadsky | | 7079 |

11170 7590 04/11/2011

Vyacheslav Zavadsky
33-3205 Uplands Drive
Ottawa, ON K1V9T3
CANADA

| EXAMINER | |
|---|---|
| ART UNIT | PAPER NUMBER |
| 2121 | |

| NOTIFICATION DATE | DELIVERY MODE |
|---|---|
| 04/11/2011 | ELECTRONIC |

**Please find below and/or attached an Office communication concerning this application or proceeding.**

The time period for reply, if any, is set in the attached communication.

Notice of the Office communication was sent electronically on above-indicated "Notification Date" to the following e-mail address(es):

zavadsky@gmail.com

UNITED STATES PATENT AND TRADEMARK OFFICE

Commissioner for Patents
United States Patent and Trademark Office
P.O. Box 1450
Alexandria, VA 22313-1450
www.uspto.gov

VYACHESLAV ZAVADSKY
33-3205 Uplands Drive
Ottawa ON K1V9T-3 CA CANADA

In re Application of :
ZAVADSKY, Vyacheslav :
Application No. 13/007,617 :
Filed: January 15, 2011 :
For: **METHOD FOR MOTOR VEHICLE INTERIOR CLIMATE CONTROL** :

**DECISION ON PETITION TO MAKE SPECIAL UNDER THE GREEN TECHNOLOGY PILOT PROGRAM**

This is a decision on the request for reconsideration of the petition under 37 CFR 1.102, filed March 4, 2011, to make the above-identified application special under the pilot program for applications pertaining to Green Technologies as set forth in 74 Federal Register Notice 64666 (December 8, 2009) and amended by 75 Federal Register Notice 28554 (May 21, 2010) and 75 Federal Register Notice 69049 (November 10, 2010).

The petition is **DENIED**.

A grantable petition to make an application special under 37 CFR 1.102 and the pilot program as set forth in 74 FR 64666 must be directed to a nonprovisional application filed under 35 USC 111(a) or be a national stage entry under 35 USC 371, exclusive of any reissue applications.

In order to qualify for special status, the following requirements must be met. 1) The application must have no more than 3 independent claims and no more than 20 total claims. 2) The application must not contain any multiple dependent claims. 3) The petition must state the basis for seeking special status, i.e., the claimed invention either: A) materially enhances the quality of the environment or B) materially contributes to: i) the discovery or development of renewable energy resources, ii) the more efficient utilization and conservation of energy resources, or iii) greenhouse gas emission reduction. 4) If the disclosure is not clear on its face that the claimed invention materially contributes under category (A) or (B), the petition must be accompanied by a statement by the applicant, assignee, or an attorney/agent registered to practice before the Office explaining how the materiality standard is met. 5) A statement that applicant will agree to make an election without traverse in a telephonic interview if a restriction requirement is made by the examiner. 6) The petition to make special must be filed electronically. 7) The petition must be filed at least one day prior to the date that a first Office Action appears in the Patent Application Information Retrieval (PAIR) system. 8) The petition must be accompanied by a

request for early publication in compliance with 37 CFR 1.219 and include the publication fee as set forth in 37 CFR 1.18(d).

The requirement for a fee for consideration of the petition to make special for applications pertaining to Green Technologies has been waived.

The petition lacks item(s) 3 and 4 above for the reasons explained in more detail below.

Item 3 clearly states the petition must state the basis for seeking special status, i.e., the claimed invention either: A) materially enhances the quality of the environment or B) materially contributes to: i) the discovery or development of renewable energy resources, ii) the more efficient utilization and conservation of energy resources, or iii) greenhouse gas emission reduction. Item 4 also states that if the disclosure is not clear on its face that the claimed invention materially contributes under category (A) or (B), the petition must be accompanied by a statement by the applicant, assignee, or an attorney/agent registered to practice before the Office explaining how the materiality standard is met."

The claimed invention is directed to an "appliance" comprising "a set of at least one micro-controller" where the "applicant [is] operable to a) receive a plurality of time use electrical pricing rates, each rate associated with at least one time interval, b) for a plurality of appliance use scenario, compute one of the following: i. the coasts of operating the said appliance for at least two difference use scenarios, ii. the cost difference in costs of operating the said appliance between two different use scenarios, iii. at least one value indicative of the absolute or relative costs of two different use scenarios." In the request for reconsideration, petitioner asserts that "[a]pplying the concept of the 'invisible hand of the market', also known in the economics as the efficient resources allocation theorem, one skilled in the art will see that once the technology will be available (demand shifting) and economic and pricing mechanism, will exists (pre-existing time of use rate structure and the invention enabling cost efficient demand shifting); the market will allocate the resource with more efficient utilization. That will enable both more efficient utilization of existing energy resources and more development of renewable energy resources as they will become more economically viable. Applicant submits that economic and market forces are material and change behavior of the market participants in the case of change of technology and/or pricing is not a speculation."

No correlation can be made between the claimed invention and the statements by the applicant to meet the requirements for special status under the Green Technology Pilot Program. The claimed invention defines an "appliance" for computing various costs. Whereas the statement of materiality standard discusses future technology and "more efficient utilization of existing energy resources and more development of renewable energy resources as they become more economically viable." Likewise, the evidence accompanying the request for reconsideration of the petition to make special titled "GridWise Demonstration Project Fast Facts" does not show the claimed invention meeting the materiality standard. Accordingly, the request for reconsideration of the petition to make special is denied.

Furthermore, Section II of the Pilot Program for Green Technologies as set forth in 74 Federal Register Notice 64666, specifies that "materiality standard does not permit an applicant to speculate as to how a hypothetical end-user might specially apply the invention in a manner that could materially enhance the quality of the environment. Nor does such standard permit an

applicant to enjoy the benefit of advanced examination merely because some minor aspect of the claimed invention may enhance the quality of the environment." As stated in the original decision, any efficient usage or conservation/development of energy due to the claimed invention by computing energy cost or shifting energy usage amounts to "specula[tion] as to how a hypothetical end-user might specially apply the invention in a manner that could materially enhance the quality of the environment."

The application is being forwarded to the Technology Center Art Unit 2121 for action in its regular turn.

Any inquiry regarding this decision should be directed to Eddie C. Lee at (571) 272 - 1732.

/Eddie C. Lee/

Eddie C. Lee
Quality Assurance Specialist, TC 2100

UNITED STATES PATENT AND TRADEMARK OFFICE

Commissioner for Patents
United States Patent and Trademark Office
P.O. Box 1450
Alexandria, VA 22313-1450
www.uspto.gov

In re Application of
Ramiro Michael Alvarez

Application No. 13007620

Filed:

Attorney Docket No. RA011947

:DECISION ON PETITION TO MAKE SPECIAL
:UNDER 37 CFR 1.102(c)(1)

This is a decision on the electronic petition under 37 CFR 1.102 (c)(1), filed 17-JAN-2011 to make the above-identified application special based on applicant's age as set forth in MPEP § 708.02, Section IV.

The petition is **GRANTED**.

A grantable petition to make an application special under 37 CFR 1.102(c)(1), MPEP § 708.02, Section IV: Applicant's Age must include a statement by applicant or a registered practitioner having evidence that applicant is at least 65 years of age. No fee is required.

Accordingly, the above-identified application has been accorded "special" status and will be taken up for action by the examiner upon the completion of all pre-examination processing.

Telephone inquiries concerning this electronic decision should be directed to the Electronic Business Center at 866-217-9197.

All other inquiries concerning either the examination or status of the application should be directed to the Technology Center.

**Doc Code: PET.GREEN**
**Document Description: Petition for Green Tech Pilot**

PTO/SB/420 (03-11)

# PETITION TO MAKE SPECIAL UNDER THE GREEN TECHNOLOGY PILOT PROGRAM

| Attorney Docket Number: n/a | Application Number (if known): 13/007,645 | Filing date: 03/19/2011 |
|---|---|---|

First Named Inventor: Kevin Sebastian Henwood

Title: Dieseleam: A Diesel-Steam Powered Automotive Vehicle

**APPLICANT HEREBY REQUESTS TO PARTICIPATE IN THE GREEN TECHNOLOGY PILOT PROGRAM FOR THE ABOVE-IDENTIFIED APPLICATION. See Instruction Sheet on page 2.**

This petition must be timely filed electronically using the USPTO electronic filing system, EFS-Web.

1. By filing this petition:

   **Applicant is requesting early publication: Applicant hereby requests early publication under 37 CFR 1.219 and the publication fee set forth in 37 CFR 1.18(d) accompanies this request.**

2. By filing this petition: applicant is agreeing to make an election without traverse in a telephonic interview and elect an invention that meets the eligibility requirements for the Green Technology Pilot Program, if the Office determines that the claims are not obviously directed to a single invention. See Instruction Sheet.

3. This request is accompanied by statements of special status for the eligibility requirement.

4. The application contains no more than three (3) independent claims and twenty (20) total claims.

5. The application does not contain any multiple dependent claims.

6. Other attachments: _____

| Signature /Kevin Sebastian Henwood/ | Date 04/07/2011 |
|---|---|
| Name (Print/Typed) Kevin Sebastian Henwood | Registration Number n/a |

***Note:*** *Signatures of all the inventors or assignees of record of the entire interest or their representative(s) are required in accordance with 37 CFR 1.33 and 11.18. Please see 37 CFR 1.4(d) for the form of the signature. If necessary, submit multiple forms for more than one signature, see below*.*

■ *Total of 1 forms are submitted.

*If you need assistance in completing the form, call 1-800-PTO-9199 and select option 2.*

# Instruction Sheet for
# Petition to Make Special Under the Green Technology Pilot Program

(Not to be Submitted to the USPTO)

***The following is a summary of the requirements (for more information see the notices (i) "Pilot Program for Green Technologies Including Greenhouse Gas Reduction," (ii) "Elimination of Classification Requirement in the Green Technology Pilot Program," and (iii) "Expansion and Extension of the Green Technology Pilot Program," available on the USPTO web site at http://www.uspto.gov/patents/init_events/green_tech.jsp):***

(1) The application must be a non-reissue, non-provisional utility application filed under 35 U.S.C. 111(a), or an international application that has entered the national stage in compliance with 35 U.S.C. 371, irrespective of the filing date of the application. Reexamination proceedings are excluded from this pilot program.

(2) The application must contain three or fewer independent claims and twenty or fewer total claims. The application must not contain any multiple dependent claims. For an application that contains more than three independent claims or twenty total claims, or multiple dependent claims, applicant must file a preliminary amendment in compliance with 37 CFR 1.121 to cancel the excess claims and/or the multiple dependent claims at the time the petition to make special is filed.

(3) The claims must be directed to a single invention that materially enhances the quality of the environment, or that materially contributes to: (1) the discovery or development of renewable energy resources; (2) the more efficient utilization and conservation of energy resources; or (3) green house gas emission reduction (see the eligibility requirements of sections II and III of the notice (i) cited above). The petition must include a statement that, if the USPTO determines that the claims are directed to multiple inventions (e.g., in a restriction requirement), applicant will agree to make an election without traverse in a telephonic interview, and elect an invention that meets the eligibility requirements in section II or III of the notice (i) cited above.

(4) The petition to make special must be timely filed electronically using the USPTO electronic filing system, EFS-Web, and selecting the document description of "Petition for Green Tech Pilot" on the EFS-Web screen. Applicant should use form PTO/SB/420, which is available as a Portable Document Format (PDF) fillable form in EFS-Web and on the USPTO Web site.

(5) The petition to make special must be filed at least one day prior to the date that a first Office action (which may be an Office action containing only a restriction requirement) appears in the Patent Application Information Retrieval (PAIR) system. Applicant may check the status of the application using PAIR.

(6) The petition to make special must be accompanied by a request for early publication in compliance with 37 CFR 1.219 and the publication fee set forth in 37 CFR 1.18(d).

# Privacy Act Statement

The **Privacy Act of 1974 (P.L. 93-579)** requires that you be given certain information in connection with your submission of the attached form related to a patent application or patent. Accordingly, pursuant to the requirements of the Act, please be advised that: (1) the general authority for the collection of this information is 35 U.S.C. 2(b)(2); (2) furnishing of the information solicited is voluntary; and (3) the principal purpose for which the information is used by the U.S. Patent and Trademark Office is to process and/or examine your submission related to a patent application or patent. If you do not furnish the requested information, the U.S. Patent and Trademark Office may not be able to process and/or examine your submission, which may result in termination of proceedings or abandonment of the application or expiration of the patent.

The information provided by you in this form will be subject to the following routine uses:

1. The information on this form will be treated confidentially to the extent allowed under the Freedom of Information Act (5 U.S.C. 552) and the Privacy Act (5 U.S.C 552a). Records from this system of records may be disclosed to the Department of Justice to determine whether disclosure of these records is required by the Freedom of Information Act.
2. A record from this system of records may be disclosed, as a routine use, in the course of presenting evidence to a court, magistrate, or administrative tribunal, including disclosures to opposing counsel in the course of settlement negotiations.
3. A record in this system of records may be disclosed, as a routine use, to a Member of Congress submitting a request involving an individual, to whom the record pertains, when the individual has requested assistance from the Member with respect to the subject matter of the record.
4. A record in this system of records may be disclosed, as a routine use, to a contractor of the Agency having need for the information in order to perform a contract. Recipients of information shall be required to comply with the requirements of the Privacy Act of 1974, as amended, pursuant to 5 U.S.C. 552a(m).
5. A record related to an International Application filed under the Patent Cooperation Treaty in this system of records may be disclosed, as a routine use, to the International Bureau of the World Intellectual Property Organization, pursuant to the Patent Cooperation Treaty.
6. A record in this system of records may be disclosed, as a routine use, to another federal agency for purposes of National Security review (35 U.S.C. 181) and for review pursuant to the Atomic Energy Act (42 U.S.C. 218(c)).
7. A record from this system of records may be disclosed, as a routine use, to the Administrator, General Services, or his/her designee, during an inspection of records conducted by GSA as part of that agency's responsibility to recommend improvements in records management practices and programs, under authority of 44 U.S.C. 2904 and 2906. Such disclosure shall be made in accordance with the GSA regulations governing inspection of records for this purpose, and any other relevant (*i.e.*, GSA or Commerce) directive. Such disclosure shall not be used to make determinations about individuals.
8. A record from this system of records may be disclosed, as a routine use, to the public after either publication of the application pursuant to 35 U.S.C. 122(b) or issuance of a patent pursuant to 35 U.S.C. 151. Further, a record may be disclosed, subject to the limitations of 37 CFR 1.14, as a routine use, to the public if the record was filed in an application which became abandoned or in which the proceedings were terminated and which application is referenced by either a published application, an application open to public inspection or an issued patent.
9. A record from this system of records may be disclosed, as a routine use, to a Federal, State, or local law enforcement agency, if the USPTO becomes aware of a violation or potential violation of law or regulation.

UNITED STATES PATENT AND TRADEMARK OFFICE

UNITED STATES DEPARTMENT OF COMMERCE
United States Patent and Trademark Office
Address: COMMISSIONER FOR PATENTS
P.O. Box 1450
Alexandria, Virginia 22313-1450
www.uspto.gov

| APPLICATION NO. | FILING DATE | FIRST NAMED INVENTOR | ATTORNEY DOCKET NO. | CONFIRMATION NO. |
|---|---|---|---|---|
| 13/007,645 | 03/19/2011 | Kevin Sebastian Henwood | | 7152 |

7590 05/02/2011

Kevin Sebastian Henwood
1301 Bosworth Street
San Francisco, CA 94131

| EXAMINER | |
|---|---|
| ART UNIT | PAPER NUMBER |
| 3611 | |

| MAIL DATE | DELIVERY MODE |
|---|---|
| 05/02/2011 | PAPER |

**Please find below and/or attached an Office communication concerning this application or proceeding.**

The time period for reply, if any, is set in the attached communication.

UNITED STATES PATENT AND TRADEMARK OFFICE

Commissioner for Patents
United States Patent and Trademark Office
P.O. Box 1450
Alexandria, VA 22313-1450
www.uspto.gov

APR 29 2011

Kevin Sebastian Henwood
1301 Bosworth Street
San Francisco CA 94131

| | | |
|---|---|---|
| In re Application of | : | |
| Kevin Sebastian HENWOOD | : | DECISION ON PETITION |
| Application No. 13/007,645 | : | TO MAKE SPECIAL UNDER |
| Filed: January 16, 2011 | : | THE GREEN TECHNOLOGY |
| Attorney Docket No. | : | PILOT PROGRAM |

This is a decision on the petitions under 37 CFR 1.102, filed April 7, 2011 to make the above-identified application special under the pilot program for applications pertaining to Green Technologies as set forth in 74 Federal Register Notice 64666 (December 8, 2009) and amended by 75 Federal Register Notice 28554 (May 21, 2010) and 75 Federal Register Notice 69049 (November 10, 2010).

The petition is **DISMISSED**.

If reconsideration of this decision is desired, a petition for reconsideration must be filed within ONE (1) MONTH OR THIRTY (30) DAYS from the mail date of this decision, whichever is longer. No extension of this time limit can be granted under 37 CFR 1.136(a) or (b). The petition for reconsideration should include an exhaustive attempt to provide the lacking item(s) noted below, since, after a decision on the petition for reconsideration, no further reconsideration or review of the matter will be undertaken by the Director.

A grantable petition to make an application special under 37 CFR 1.102 and the pilot program as set forth in 74 FR 64666 must be directed to a nonprovisional application filed under 35 USC 111(a) or be a national stage entry under 35 USC 371, exclusive of any reissue applications.

In order to qualify for special status, the following requirements must be met. 1) The application must have no more than 3 independent claims and no more than 20 total claims. 2) The application must not contain any multiple dependent claims. 3) The petition must state the basis for seeking special status, i.e., the claimed invention either: A) materially enhances the quality of the environment or B) materially contributes to: i) the discovery or development of renewable energy resources, ii) the more efficient utilization and conservation of energy resources, or iii) greenhouse gas emission reduction. 4) If the disclosure is not clear on its face that the claimed invention materially contributes under category (A) or (B), the petition must be accompanied by a statement by the applicant, assignee, or an attorney/agent registered to practice before the Office explaining how the materiality standard is met. 5) A statement that applicant will agree to make an election

without traverse in a telephonic interview if a restriction requirement is made by the examiner. 6) The petition to make special must be filed electronically. 7) The petition must be filed at least one day prior to the date that a first Office Action appears in the Patent Application Information Retrieval (PAIR) system. 8) The petition must be accompanied by a request for early publication in compliance with 37 CFR 1.219 and include the publication fee as set forth in 37 CFR 1.18(d).

The requirement for a fee for consideration of the petition to make special for applications pertaining to Green Technologies has been waived.

The petition lacks items 3 and 4.

In regard to item 3, petitioner should note that the instant petition fails to state the basis for the special status (i.e., whether the instant invention (1) materially enhances the quality of the environment or materially contributes to (2) development of renewable energy resources or energy conservation, or (3) greenhouse gas reduction) as required by sections II and III of the notice.

In regard to item 4, since there is no materiality statement, it is unclear what the fuel economy is or how much fuel would be saved with the claimed invention. It appears that the boiler/steam engine system is not an energy efficient.sytem due to energy loss as heat. Therefore, it seems that the claimed invention would not result in any energy savings as there is no means to reduce heat loss. In addition, steam escapes and boiler explosions raise safety concerns as they have been known to cause great loss of life. As stated in the notice, the materiality standard does not permit an applicant to speculate as to how a hypothetical end-user might specially apply the invention in a manner than could materially contribute to category (A) or (B). *Also see MPEP § 708.02 (VI).* Therefore, it is not agreed that the application on its face meets that materiality standard.

Telephone inquiries concerning this decision should be directed to Lanna Mai at 571-272-6867.

The application is being forwarded to the Technology Center Art Unit 3611 for action in its regular turn.

/Lanna Mai/

Lanna Mai
Quality Assurance Specialist
Technology Center 3600

UNITED STATES PATENT AND TRADEMARK OFFICE

Commissioner for Patents
United States Patent and Trademark Office
P.O. Box 1450
Alexandria, VA 22313-1450
www.uspto.gov

**P. JEFF MARTIN**
**THE MCGOUGAN LAW FIRM, LLC**
**1180 HWY. 17 N., SUITE 2**
**P.O. BOX 250**
**LITTLE RIVER SC 29566**

MAILED
FEB 23 2011
OFFICE OF PETITIONS

| | | |
|---|---|---|
| In re Application of | : | |
| Philip A. Orten | : | |
| Application No. 13/007,694 | : | ON PETITION |
| Filed: January 17, 2011 | | |
| Attorney Docket No. SC-4145-002 | : | |
| | : | |

This is a decision on the petition under 37 CFR 1.102(c)(1), filed January 17, 2011, to make the above-identified application special based on applicant's age as set forth in M.P.E.P. § 708.02, Section IV.

The petition is **GRANTED**.

A grantable petition to make an application special under 37 CFR 1.102(c)(1) and MPEP § 708.02, Section IV: Applicant's Age must be accompanied by evidence showing that at least one of the applicants is 65 years of age, or more, such as a birth certificate or a statement by applicant. No fee is required

The instant petition includes a statement by applicant's attorney that applicant is 65 years of age and a Declaration from applicant that applicant is 65 years of age. Accordingly, the above-identified application has been accorded "special" status.

Telephone inquiries concerning this decision should be directed to the undersigned at 571-272-7751. All other inquiries concerning either the examination or status of the application should be directed to the Technology Center.

This matter is being referred to the Technology Center Art Unit for 3784 for action on the merits commensurate with this decision.

Joan Olszewski
Petitions Examiner
Office of Petitions

UNITED STATES PATENT AND TRADEMARK OFFICE

UNITED STATES DEPARTMENT OF COMMERCE
United States Patent and Trademark Office
Address: COMMISSIONER FOR PATENTS
P.O. Box 1450
Alexandria, Virginia 22313-1450
www.uspto.gov

| APPLICATION NO. | FILING DATE | FIRST NAMED INVENTOR | ATTORNEY DOCKET NO. | CONFIRMATION NO. |
|---|---|---|---|---|
| 13/007,719 | 01/17/2011 | Henrik Stiesdal | 2009P23030US | 7330 |

22116 7590 03/02/2011

SIEMENS CORPORATION
INTELLECTUAL PROPERTY DEPARTMENT
170 WOOD AVENUE SOUTH
ISELIN, NJ 08830

| EXAMINER | |
|---|---|
| ART UNIT | PAPER NUMBER |
| 3652 | |

| MAIL DATE | DELIVERY MODE |
|---|---|
| 03/02/2011 | PAPER |

**Please find below and/or attached an Office communication concerning this application or proceeding.**

The time period for reply, if any, is set in the attached communication.

UNITED STATES PATENT AND TRADEMARK OFFICE

Commissioner for Patents
United States Patent and Trademark Office
P.O. Box 1450
Alexandria, VA 22313-1450
www.uspto.gov

MAR - 2 2011

SIEMENS CORPORATION
INTELLECTUAL PROPERTY DEPARTMENT
170 WOOD AVENUE SOUTH
ISELIN NJ 08830

| | | |
|---|---|---|
| In re application of | : | **DECISION ON REQUEST TO** |
| Henrik Stiesdal | : | **PARTICIPATE IN PATENT** |
| Application No. 13/007,719 | : | **PROSECUTION HIGHWAY** |
| Filed: January 17, 2011 | : | **PROGRAM AND PETITION** |
| For: METHOD OF TRANSPORTATION FOR | : | **TO MAKE SPECIAL UNDER** |
| WIND TURBINE TOWER | : | **37 CFR 1.102(a)** |

This is a decision on the renewed request to participate in the Patent Prosecution Highway (PPH) program and the petition under 37 CFR 1.102(a), filed January 19, 2011, to make the above-identified application special.

The request and petition are **GRANTED**.

A grantable request to participate in the PPH program and petition to make special require:

(1) The U.S. application must validly claim priority under 35 U.S.C. 119(a) to one or more applications filed in the EPO;
(2) Applicant must submit a copy of the allowable/patentable claim(s) from the EPO application(s) along with an English translation thereof and a statement that the English translation is accurate;
(3) All the claims in the U.S. application must sufficiently correspond or be amended to sufficiently correspond to the allowable/patentable claim(s) in the EPO application(s);
(4) Examination of the U.S. application has not begun;
(5) Applicant must submit a copy of the latest Office action from each of the EPO application(s) containing the allowable/patentable claim(s) along with an English translation thereof and a statement that the English translation is accurate;
(6) Applicant must submit an IDS listing the documents cited by the EPO examiner in the EPO Office action along with copies of documents except U.S. patents or U.S. patent application publications.

In light of the preliminary amendment filed on January 17, 2011, the request to participate in the PPH program complies with the above requirements. Therefore, the above-identified application has been accorded "special" status.

All other inquiries concerning the examination or status of the application should be directed to the Patent Application Information Retrieval (PAIR) system.

The application is being forwarded to the examiner for action on the merits commensurate with this decision.

Any inquiry regarding this decision should be directed to Mikado Buiz, Quality Assurance Specialist, at (571) 272-6611.

/ Mikado Buiz /

Mikado Buiz,
Quality Assurance Specialist
Technology Center 3600

MB/MB: 03/01/11

**Doc Code: PET.GREEN**
**Document Description: Petition for Green Tech Pilot**

PTO/SB/420 (05-10)
Approved for use through 05/31/2010. OMB 0651-0062
U.S. Patent and Trademark Office; U. S. DEPARTMENT OF COMMERCE
Under the Paperwork Reduction Act of 1995, no persons are required to respond to a collection of information unless it displays a valid OMB control number.

# PETITION TO MAKE SPECIAL UNDER THE GREEN TECHNOLOGY PILOT PROGRAM

| Attorney Docket Number: VWS-249US | Application Number (if known): 13/007,825 | Filing date: January 17, 2011 |
|---|---|---|

First Named Inventor: Thomas Hjort

Title: OPERATING WIND TURBINES UNDER CONVERTER FAULTS

**APPLICANT HEREBY REQUESTS TO PARTICIPATE IN THE GREEN TECHNOLOGY PILOT PROGRAM FOR THE ABOVE-IDENTIFIED APPLICATION.** **See Instruction Sheet on page 2.**

This petition must be timely filed electronically using the USPTO electronic filing system, EFS-Web.

1. By filing this petition:

   **Applicant is requesting early publication: Applicant hereby requests early publication under 37 CFR 1.219 and the publication fee set forth in 37 CFR 1.18(d) accompanies this request.**

2. By filing this petition: applicant is agreeing to make an election without traverse in a telephonic interview and elect an invention that meets the eligibility requirements set forth in the notice titled "Pilot Program for Green Technologies Including Greenhouse Gas Reduction," as modified by the notice titled "Elimination of Classification Requirement in the Green Technology Pilot Program," each of which was published in the Federal Register, if the Office determines that the claims are not obviously directed to a single invention.

3. This request is accompanied by statements of special status for the eligibility requirement.

4. The application contains no more than three (3) independent claims and twenty (20) total claims.

5. The application does not contain any multiple dependent claims.

6. Other attachments: _____

| Signature /William R. Allen/ | Date 01-18-2011 |
|---|---|
| Name (Print/Typed) William R. Allen | Registration Number 48389 |

***Note:*** *Signatures of all the inventors or assignees of record of the entire interest or their representative(s) are required in accordance with 37 CFR 1.33 and 11.18. Please see 37 CFR 1.4(d) for the form of the signature. If necessary, submit multiple forms for more than one signature, see below*.*

☑ *Total of 1 forms are submitted.

The information is required to obtain or retain a benefit by the public which is to file (and by the USPTO to process) an application. Confidentiality is governed by 35 U.S.C. 122 and 37 CFR 1.11 and 1.14. This collection is estimated to take 12 hours to complete, including gathering, preparing, and submitting the completed application form to the USPTO. Time will vary depending upon the individual case. Any comments on the amount of time you require to complete this form and/or suggestions for reducing this burden, should be sent to the Chief Information Officer, U.S. Patent and Trademark Office, U.S. Department of Commerce, P.O. Box 1450, Alexandria, VA 22313-1450. DO NOT SEND FEES OR COMPLETED FORMS TO THIS ADDRESS. **SEND TO: Commissioner for Patents, P.O. Box 1450, Alexandria, VA 22313-1450.**

*If you need assistance in completing the form, call 1-800-PTO-9199 and select option 2.*

PTO/SB/420 (05-10)
Approved for use through 05/31/2010. OMB 0651-0062
U.S. Patent and Trademark Office; U. S. DEPARTMENT OF COMMERCE
Under the Paperwork Reduction Act of 1995, no persons are required to respond to a collection of information unless it displays a valid OMB control number.

# Instruction Sheet for
# Petition to Make Special Under the Green Technology Pilot Program

(Not to be Submitted to the USPTO)

***The following is a summary of the requirements** (for more information see the notices (i) "Pilot Program for Green Technologies Including Greenhouse Gas Reduction" and (ii) "Elimination of Classification Requirement in the Green Technology Pilot Program," available on the USPTO web site at http://www.uspto.gov/patents/init_events/green_tech.jsp):*

(1) The application must be a non-reissue, non-provisional utility application filed under 35 U.S.C. 111(a), or an international application that has entered the national stage in compliance with 35 U.S.C. 371. The application must be previously filed before the publication date of the notice cited above. Reexamination proceedings are excluded from this pilot program.

(2) The application must contain three or fewer independent claims and twenty or fewer total claims. The application must not contain any multiple dependent claims. For an application that contains more than three independent claims or twenty total claims, or multiple dependent claims, applicant must file a preliminary amendment in compliance with 37 CFR 1.121 to cancel the excess claims and/or the multiple dependent claims at the time the petition to make special is filed.

(3) The claims must be directed to a single invention that materially enhances the quality of the environment, or that materially contributes to: (1) the discovery or development of renewable energy resources; (2) the more efficient utilization and conservation of energy resources; or (3) green house gas emission reduction (see the eligibility requirements of sections II and III of the notice (i) cited above). The petition must include a statement that, if the USPTO determines that the claims are directed to multiple inventions (e.g., in a restriction requirement), applicant will agree to make an election without traverse in a telephonic interview, and elect an invention that meets the eligibility requirements in section II or III of the notice (i) cited above.

(4) The petition to make special must be timely filed electronically using the USPTO electronic filing system, EFS-Web, and selecting the document description of "Petition for Green Tech Pilot" on the EFS-Web screen. Applicant should use form PTO/SB/420, which is available as a Portable Document Format (PDF) fillable form in EFS-Web and on the USPTO Web site.

(5) The petition to make special must be filed at least one day prior to the date that a first Office action (which may be an Office action containing only a restriction requirement) appears in the Patent Application Information Retrieval (PAIR) system. Applicant may check the status of the application using PAIR.

(6) The petition to make special must be accompanied by a request for early publication in compliance with 37 CFR 1.219 and the publication fee set forth in 37 CFR 1.18(d).

# Privacy Act Statement

The **Privacy Act of 1974 (P.L. 93-579)** requires that you be given certain information in connection with your submission of the attached form related to a patent application or patent. Accordingly, pursuant to the requirements of the Act, please be advised that: (1) the general authority for the collection of this information is 35 U.S.C. 2(b)(2); (2) furnishing of the information solicited is voluntary; and (3) the principal purpose for which the information is used by the U.S. Patent and Trademark Office is to process and/or examine your submission related to a patent application or patent. If you do not furnish the requested information, the U.S. Patent and Trademark Office may not be able to process and/or examine your submission, which may result in termination of proceedings or abandonment of the application or expiration of the patent.

The information provided by you in this form will be subject to the following routine uses:

1. The information on this form will be treated confidentially to the extent allowed under the Freedom of Information Act (5 U.S.C. 552) and the Privacy Act (5 U.S.C 552a). Records from this system of records may be disclosed to the Department of Justice to determine whether disclosure of these records is required by the Freedom of Information Act.
2. A record from this system of records may be disclosed, as a routine use, in the course of presenting evidence to a court, magistrate, or administrative tribunal, including disclosures to opposing counsel in the course of settlement negotiations.
3. A record in this system of records may be disclosed, as a routine use, to a Member of Congress submitting a request involving an individual, to whom the record pertains, when the individual has requested assistance from the Member with respect to the subject matter of the record.
4. A record in this system of records may be disclosed, as a routine use, to a contractor of the Agency having need for the information in order to perform a contract. Recipients of information shall be required to comply with the requirements of the Privacy Act of 1974, as amended, pursuant to 5 U.S.C. 552a(m).
5. A record related to an International Application filed under the Patent Cooperation Treaty in this system of records may be disclosed, as a routine use, to the International Bureau of the World Intellectual Property Organization, pursuant to the Patent Cooperation Treaty.
6. A record in this system of records may be disclosed, as a routine use, to another federal agency for purposes of National Security review (35 U.S.C. 181) and for review pursuant to the Atomic Energy Act (42 U.S.C. 218(c)).
7. A record from this system of records may be disclosed, as a routine use, to the Administrator, General Services, or his/her designee, during an inspection of records conducted by GSA as part of that agency's responsibility to recommend improvements in records management practices and programs, under authority of 44 U.S.C. 2904 and 2906. Such disclosure shall be made in accordance with the GSA regulations governing inspection of records for this purpose, and any other relevant (*i.e.*, GSA or Commerce) directive. Such disclosure shall not be used to make determinations about individuals.
8. A record from this system of records may be disclosed, as a routine use, to the public after either publication of the application pursuant to 35 U.S.C. 122(b) or issuance of a patent pursuant to 35 U.S.C. 151. Further, a record may be disclosed, subject to the limitations of 37 CFR 1.14, as a routine use, to the public if the record was filed in an application which became abandoned or in which the proceedings were terminated and which application is referenced by either a published application, an application open to public inspection or an issued patent.
9. A record from this system of records may be disclosed, as a routine use, to a Federal, State, or local law enforcement agency, if the USPTO becomes aware of a violation or potential violation of law or regulation.

**Certificate of Electronic Transmission**

I hereby certify that this correspondence is being electronically transmitted to the U.S. Patent and Trademark Office via EFS-WEB on January 18, 2011.

/William R. Allen/ January 18, 2011

William R. Allen, Ph.D. Reg. No, 48,389 Date

**IN THE UNITED STATES PATENT AND TRADEMARK OFFICE**

| | |
|---|---|
| Applicants: | Thomas Hjort |
| Serial No.: | 13/007,825 |
| Filed: | January 17, 2011 |
| Group Art Unit: | Unknown |
| Examiner: | Unknown |
| Confirmation No.: | 7569 |
| Title: | OPERATING WIND TURBINES UNDER CONVERTER FAULTS |
| Attorney Docket: | VWS-249US |

Cincinnati, Ohio 45202 January 18, 2011

Commissioner for Patents
P.O. Box 1450
Alexandria, VA 22313-1450

**STATEMENT OF SPECIAL STATUS FOR ELIGIBILITY UNDER THE GREEN TECHNOLOGY PILOT PROGRAM**

Sir:

Applicant hereby submits a statement to support Applicant's petition for the Green Technology Pilot Program, which is filed on even date herewith. The Applicant seeks special status because the invention disclosed and claimed in the present application materially enhances the quality of the environment by contributing to the restoration or maintenance of the basic life-sustaining natural elements. The materiality standard is satisfied because the claimed invention materially enhances the quality of the environment by contributing to the restoration or maintenance of one of the basic life-sustaining natural elements and/or the claimed invention

materially contributes to development of renewable energy or energy conservation and greenhouse gas emission reduction. Specifically, the claimed invention relates to wind turbines that operate using a renewable natural resource (wind) rather than fossil fuels and, more specifically, to methods of operating wind turbines under converter faults, and to related wind turbines. Wind turbine operation without the consumption of fossil fuels enhances the quality of the environment, contributes to the development of renewable energy, and reduces greenhouse gas emission.

Early and favorable consideration of Applicant's petition and this claims contained in this application are respectfully requested.

Applicant does not believe any fees are due in connection with filing this communication other than the publication fee. If, however, any fees are necessary as a result of this communication, the Commissioner is hereby authorized to charge any under-payment or fees associated with this communication or credit any over-payment to Deposit Account No. 23-3000.

Respectfully submitted,

WOOD, HERRON & EVANS, L.L.P.

/William R. Allen/
William R. Allen, Ph.D.
Reg. No, 48,389

2700 Carew Tower
441 Vine Street
Cincinnati, OH 45202
(513) 241-2324 (voice)
(513) 421-7269 (facsimile)
wallen@whepatent.com

UNITED STATES PATENT AND TRADEMARK OFFICE

UNITED STATES DEPARTMENT OF COMMERCE
United States Patent and Trademark Office
Address: COMMISSIONER FOR PATENTS
P.O. Box 1450
Alexandria, Virginia 22313-1450
www.uspto.gov

| APPLICATION NO. | FILING DATE | FIRST NAMED INVENTOR | ATTORNEY DOCKET NO. | CONFIRMATION NO. |
|---|---|---|---|---|
| 13/007,825 | 01/17/2011 | Thomas Hjort | VWS-249US | 7569 |

26875 7590 03/08/2011

WOOD, HERRON & EVANS, LLP
2700 CAREW TOWER
441 VINE STREET
CINCINNATI, OH 45202

| EXAMINER | |
|---|---|
| ART UNIT | PAPER NUMBER |
| 2838 | |

| MAIL DATE | DELIVERY MODE |
|---|---|
| 03/08/2011 | PAPER |

**Please find below and/or attached an Office communication concerning this application or proceeding.**

The time period for reply, if any, is set in the attached communication.

UNITED STATES PATENT AND TRADEMARK OFFICE

Commissioner for Patents
United States Patent and Trademark Office
P.O. Box 1450
Alexandria, VA 22313-1450
www.uspto.gov

WOOD, HERRON & EVANS, LLP
2700 CAREW TOWER
441 VINE STREET
CINCINNATI OH 45202

| | | |
|---|---|---|
| In re Application of | : | |
| Thomas HJORT | : | DECISION ON PETITION |
| Application No. 13/007,825 | : | TO MAKE SPECIAL UNDER |
| Filed: January 17, 2011 | : | THE GREEN TECHNOLOGY |
| Attorney Docket No. VWS-249US | : | PILOT PROGRAM |

This is a decision on the petition under 37 CFR 1.102, filed on January 18, 2011, to make the above-identified application special under the pilot program for applications pertaining to Green Technologies as set forth 74 Federal Register Notice 64666 (December 8, 2009) and amended by 75 Federal Register Notice 28554 (May 21, 2010) and 75 Federal Register Notice 69049 (November 10, 2010).

The petition is **DISMISSED**.

If reconsideration of this decision is desired, a petition for reconsideration must be filed within ONE (1) MONTH OR THIRTY (30) DAYS from the mail date of this decision, whichever is longer. No extension of this time limit can be granted under 37 CFR 1.136(a) or (b). The petition for reconsideration should include an exhaustive attempt to provide the lacking item(s) noted below, since, after a decision on the petition for reconsideration, no further reconsideration or review of the matter will be undertaken by the Director.

A grantable petition to make an application special under 37 CFR 1.102 and the pilot program as set forth in 74 FR 64666 must be directed to a nonprovisional application filed under 35 USC 111(a) or be a national stage entry under 35 USC 371, exclusive of any reissue applications and be filed prior to the date of the notice, December 8, 2009.

In order to qualify for special status, the following requirements must be met. 1) The application must have no more than 3 independent claims and no more than 20 total claims. 2) The application must not contain any multiple dependent claims. 3) The petition must state the basis for seeking special status, i.e., the claimed invention either: A) materially enhances the quality of the environment or B) materially contributes to: i) the discovery or development of renewable energy resources, ii) the more efficient utilization and conservation of energy resources, or iii) greenhouse gas emission reduction. 4) If the disclosure is not clear on its face that the claimed invention materially contributes under category (A) or (B), the petition must be accompanied by a statement by the applicant, assignee, or an attorney/agent registered to practice before the

Office explaining how the materiality standard is met. 5) A statement that applicant will agree to make an election without traverse in a telephonic interview if a restriction requirement is made by the examiner. 6) The petition to make special must be filed electronically. 7) The petition must be filed at least one day prior to the date that a first Office Action appears in the Patent Application Information Retrieval (PAIR) system. 8) The petition must be accompanied by a request for early publication in compliance with 37 CFR 1.219 and include the publication fee as set forth in 37 CFR 1.18(d).

The requirement for a fee for consideration of the petition to make special for applications pertaining to Green Technologies has been waived.

The petition lacks item 1.

In regard to item 1, the application currently has more than 3 independent claims.

Any reconsideration of this decision should be submitted through the USPTO electronic filing system, EFS-Web, and selecting the document description of "Petition for Green Tech Pilot" on the EFS-Web screen.

Telephone inquiries concerning this decision should be directed to Lee W. Young at 571-272-4549.

The application is being forwarded to the Technology Center Art Unit 2838 for action in its regular turn.

Lee W. Young
Quality Assurance Specialist
Technology Center 2800

UNITED STATES PATENT AND TRADEMARK OFFICE

UNITED STATES DEPARTMENT OF COMMERCE
United States Patent and Trademark Office
Address: COMMISSIONER FOR PATENTS
P.O. Box 1450
Alexandria, Virginia 22313-1450
www.uspto.gov

| APPLICATION NO. | FILING DATE | FIRST NAMED INVENTOR | ATTORNEY DOCKET NO. | CONFIRMATION NO. |
|---|---|---|---|---|
| 13/007,858 | 01/17/2011 | Moo-Ho Hong | LGCHEM 3.3-129 DIV | 7634 |

86765 7590 07/13/2011

LGCHEM
Lerner, David, Littenberg, Krumholz & Mentlik, LLP
600 South Avenue West
Westfield, NJ 07090

| EXAMINER |
|---|
| LEUNG, JENNIFER A |

| ART UNIT | PAPER NUMBER |
|---|---|
| 1774 | |

| NOTIFICATION DATE | DELIVERY MODE |
|---|---|
| 07/13/2011 | ELECTRONIC |

**Please find below and/or attached an Office communication concerning this application or proceeding.**

The time period for reply, if any, is set in the attached communication.

Notice of the Office communication was sent electronically on above-indicated "Notification Date" to the following e-mail address(es):

eOfficeAction@ldlkm.com

UNITED STATES PATENT AND TRADEMARK OFFICE

Commissioner for Patents
United States Patent and Trademark Office
P.O. Box 1450
Alexandria, VA 22313-1450
www.uspto.gov

BC

July 12, 2011

| | | |
|---|---|---|
| In re application of | : | DECISION ON REQUEST TO |
| HONG, MOO-HO et al. | : | PARTICIPATE IN PATENT |
| Serial No. 13/007,858 | : | PROSECUTION HIGHWAY |
| Filed: January 17, 2011 | : | PROGRAM AND |
| For: APPARATUS FOR THE | : | PETITION TO MAKE SPECIAL |
| HYDROFORMYLATION OF OLEFINS | : | UNDER 37 CFR 1.102(a) |

This is a decision on the request for reconsideration to participate in the Patent Prosecution Highway (PPH) program and the petition under 37 CFR 1.102(a) to make the above-identified application special filed February 21, 2011.

The request and petition are **GRANTED**.

A grantable request to participate in the PPH program and petition to make special require:

(1) The U.S. application must validly claim priority under 35 U.S.C. 119(a) to one or more applications filed in the KIPO, note where the KIPO application with similar claims is not the same application from which the U.S. application claims priority that the applicant must identify the relationship between the KIPO application with similar claims and the KIPO priority application;

(2) Applicant must submit a copy of:
   a. The allowable/patentable claim(s) from the KIPO application(s);
   b. An English translation of the allowable/ patentable claim(s); and
   c. A statement that the English translation is accurate;

(3) Applicant must:
   a. Ensure all the claims in the U.S. application must sufficiently correspond or be amended to sufficiently correspond to the allowable/patentable claim(s) in the KIPO application(s); and
   b. Submit a claims correspondence table in English;

(4) Examination of the U.S. application has not begun;

(5) Applicant must submit a copy of:
   a. All of the Office actions from each of the KIPO application(s) containing the allowable/patentable claim(s) that are the basis for the request;
   b. An English language translation of the KIPO Office actions from (5)(a) above; and

c. A statement that the English translation is accurate; and

(6) Applicant must submit:
a. An IDS listing the documents cited by the KIPO examiner in the KIPO office action (unless already submitted in this application)
b. Copies of documents except U.S. patents or U.S. patent application publications (unless already submitted in this application).

The request to participate in the PPH program and petition comply with the above requirements. Accordingly, the above-identified application has been accorded "special" status.

The application is being forwarded to the examiner for action on the merits commensurate with this decision.

Any inquiry regarding this decision should be directed to Blaine Copenheaver, Quality Assurance Specialist, at (571) 272-1156.

All other inquiries concerning the examination or status of the application is accessible in the PAIR system at http://www.uspto.gov/ebc/index.html.

/Blaine Copenheaver/

Blaine Copenheaver
Quality Assurance Specialist
Technology Center 1700

UNITED STATES PATENT AND TRADEMARK OFFICE

Commissioner for Patents
United States Patent and Trademark Office
P.O. Box 1450
Alexandria, VA 22313-1450
www.uspto.gov

LOREN G. HELMREICH
5851 San Felipe
SUITE 975
HOUSTON TX 77057

MAILED
APR 05 2011
OFFICE OF PETITIONS

| | | |
|---|---|---|
| In re Application of | : | |
| Gill et al. | : | |
| Application No. 13/007873 | : | |
| Filing or 371(c) Date: 01/17/2011 | : | |
| Attorney Docket Number: | : | DECISION |
| UT-113-1 | : | ON PETITION |

This is a decision on the Petition Under 37 CFR 1.57(a), filed February 11, 2011.

The petition is granted to the extent indicated below.

Background

The application was filed on January 17, 2011. On February 1, 2011, the Office of Patent Application Processing mailed a Notice of Incomplete Provisional Application (hereinafter "Notice"), informing Applicant, *inter alia*, that the application had NOT been accorded a filing date because the application had been deposited without drawings.

Applicant responds with the present petition and amendment of the application to include inadvertently omitted drawings, based upon a benefit claim to a prior-filed application in accordance with 37 CFR 1.57(a).

Applicant's arguments and evidence have been considered. However, a review of the application confirms that, as filed, the application contained at least one process or method claim. MPEP 601.01(f) provides that:

> It has been USPTO practice to treat an application that contains at least one process or method claim as an application for which a drawing is not necessary for an understanding of the invention under 35 U.S.C. 113 (first sentence).

Thus, pursuant to § 601.01(f), a drawing is not considered essential for a filing date. The instant application is entitled to a filing date without drawings present in the application.

Accordingly, the Office should have granted the application a filing date and mailed a Notice of Omitted Items instead of a Notice of Incomplete Nonprovisional Application. As stated in MPEP 601.01(g) under the section entitled, "Application Entitled to a Filing Date," applicant may submit an amendment to include the inadvertently omitted portion of the drawing(s) pursuant to 37 CFR 1.57(a):

> [i]f an application was filed on or after September 21, 2004, and contains a claim under 37 CFR 1.55 for priority of a prior-filed foreign application, or a claim under 37 CFR 1.78 for the benefit of a prior-filed provisional, nonprovisional, or international application that was present on the filing date of the application, and the omitted portion of the drawing(s) was inadvertently omitted from the application and is completely contained in the prior-filed application[.]

Please note that no petition is required and that the amendment must comply with 37 CFR 1.57(a) and 37 CFR 1.121. See MPEP § 201.17. The amendment to include the inadvertently omitted drawing(s) will be considered by the examiner in the normal course of business.

To the extent the present petition requests a filing date of January 17, 2011 with no drawings present in the application, the petition is **GRANTED**.

Given the basis for granting this petition, the petition fee has been refunded to applicant's deposit account.

Pursuant to this decision, the application will be referred to OPAP for:

- X **correction of the filing date to January 17, 2011**;
- X **for indication in Office records, as appropriate, that "0" sheets of drawings were present on filing** and
- X **for issuance of a filing receipt.**

Telephone inquiries concerning this matter should be directed to Attorney Derek Woods at (571) 272-3232.

Christopher Bottorff
Supervisor
Office of Petitions

UNITED STATES PATENT AND TRADEMARK OFFICE

Commissioner for Patents
United States Patent and Trademark Office
P.O. Box 1450
Alexandria, VA 22313-1450
www.uspto.gov

Patent No. : 8,049,935 B2
Ser. No. : 13/007,880
Inventor(s) : Ang et al.
Issued : Nov. 1, 2011
Title : OPTICAL SCANNER WITH NON-REDUNDANT OVERWRITING
Docket No. : 20060961USDIV-XER1465US02
Re: Request for Certificate of Correction

Consideration has been given your request for the issuance of a certificate of correction for the above-identified patent under the provisions of Rule(s) 1.322 and/or 1.323.

Assignees' names and addresses (assignment data) printed in a patent, are based *solely* on information supplied in the appropriate space for identifying the assignment data, i.e., item 3 of the Issue Fee Transmittal Form PTOL-85B. Granting of a request under 37 CFR 3.81(b) is required to correct applicant's error providing ***incorrect or erroneous*** assignment data, *before* issuance of a Certificate of Correction, under 37 CFR 1.323 *(see Manual of Patent Examining Procedures (M.P.E.P) Chp.1400, sect. 1481).* This procedure is required *at any time after the issue fee is paid*, including after issuance of the patent.

In view of the foregoing, your request, in this matter, is hereby denied.

A request to correct the Assignee under 37 CFR 3.81(b) should include:

A. **the processing fee set forth in 37 CFR 1. 17(i) (currently $130);**
B. a statement that the failure to include the correct assignee name on the PTOL-85B was inadvertent; and
C. a copy of the Notice of Recordation of Assignment Document, reflecting the reel and frame number where the assignment(s) is recorded and/or reflecting proof of *the date* the assignment was submitted for recordation.

*In the Request*, Applicant(s) may request that the file be forwarded to Certificates of Correction Branch, for issuance of a Certificate of Correction, if the Request is granted.

Any request under 37 CFR 3.81(b) should be directed to the following address or facsimile number:

By mail:
Mail Stop PETITIONS
Commissioner for Patents
Post Office Box 1450
Alexandria, VA 22313-1450

By hand: Customer Service Window
Mail Stop Petitions
Randolph Building
401 Dulany Street
Alexandria, VA 22314

By fax: (703) 872-9306
ATTN: Office of Petitions

If a fee (currently $100) was previously submitted for consideration of a Request for Certificate of Correction, under CFR 1.323, to correct assignment data, no additional fee is required.

**Ennis Young**
For Mary Diggs
Decisions & Certificates
of Correction Branch
(571) **272-3435** or (703) 756-1814

UNITED STATES PATENT AND TRADEMARK OFFICE

Commissioner for Patents
United States Patent and Trademark Office
P.O. Box 1450
Alexandria, VA 22313-1450
www.uspto.gov

**FAY SHARPE / XEROX - ROCHESTER**
**1228 EUCLID AVENUE, 5TH FLOOR**
**THE HALLE BUILDING**
**CLEVELAND OH 44115**

MAILED
MAR 21 2012
OFFICE OF PETITIONS

In re Patent No. 8,049,935 :
Issue Date: November 01, 2011 :
Application No. 13/007,880 : DECISION ON PETITION
Filed: January 17, 2011 :
Attorney Docket No. **20060961USDIV-XER1465US02** :

This is a decision on the petition, filed, February 29, 2012, which is being treated as a request under 37 CFR 3.81(b)[1] to correct the assignee's name on the Fee(s) Transmittal form PTOL-85(b) by way of a certificate of correction in the patent to be issued from the above-identified application.

The request is **GRANTED**.

Petitioner states that the correct assignee's name is "Xerox Corporation, Norwalk, CT (US)" and that the incorrect assignee's name was included on the Fee(s) Transmittal form PTOL-85(b) at the time of payment of the issue fee. Accordingly, petitioner requests that a certificate of correction be issued to reflect the correct assignee on the front page of the Letters Patent in the patent to be issued from the application.

37 CFR 3.81(b), effective June 25, 2004, reads:

> *After payment of the issue fee:* Any request for issuance of an application in the name of the assignee submitted after the date of payment of the issue fee, and any request for a patent to be corrected to state the name of the assignee, must state that the assignment was submitted for recordation as set forth in § 3.11 before issuance of the patent, and must include a request for a certificate of correction under § 1.323 of this chapter (accompanied by the fee set forth in § 1.20(a) and the processing fee set forth in § 1.17(i) of this chapter.

[1] *See* MPEP 1309, subsection II; and Official Gazette of June 22, 2004.

The request was accompanied by a certificate of correction (and fee) as required by 3.81(b). Further, Office assignment records reflect that "Xerox Corporation, Norwalk, CT (US)" is the assignee of record. Accordingly, as the request complies with the provisions of 37 CFR 3.81(b), it would be appropriate for a certificate of correction to be processed after issuance of this application into a patent.

Inquiries concerning this decision should be directed to the Michelle R. Eason at (571) 272-4231. Any questions concerning the issuance of a certificate of correction should be directed to the Certificates of Correction Branch at (571) 272-4200.

This matter is being referred to the Certificates of Correction Branch for processing of a certificate of correction after issuance of this application into a patent.

Thurman K. Page

Thurman Page
Petitions Examiner
Office of Petitions

**Doc Code: PET.GREEN**
**Document Description: Petition for Green Tech Pilot**

PTO/SB/420 (11-10)
Approved for use through 01/31/2011. OMB 0651-0062
U.S. Patent and Trademark Office; U. S. DEPARTMENT OF COMMERCE
Under the Paperwork Reduction Act of 1995, no persons are required to respond to a collection of information unless it displays a valid OMB control number.

# PETITION TO MAKE SPECIAL UNDER THE GREEN TECHNOLOGY PILOT PROGRAM

| Attorney Docket Number: 1121040 | Application Number (if known): 13/007,910 | Filing date: January 17, 2011 |
|---|---|---|
| First Named Inventor: John Paul MORGAN | | |
| Title: LIGHT-GUIDE SOLAR PANEL AND METHOD OF FABRICATION THEREOF | | |

**APPLICANT HEREBY REQUESTS TO PARTICIPATE IN THE GREEN TECHNOLOGY PILOT PROGRAM FOR THE ABOVE-IDENTIFIED APPLICATION. See Instruction Sheet on page 2.**

This petition must be timely filed electronically using the USPTO electronic filing system, EFS-Web.

1. By filing this petition:

   **Applicant is requesting early publication: Applicant hereby requests early publication under 37 CFR 1.219 and the publication fee set forth in 37 CFR 1.18(d) accompanies this request.**

2. By filing this petition: applicant is agreeing to make an election without traverse in a telephonic interview and elect an invention that meets the eligibility requirements for the Green Technology Pilot Program, if the Office determines that the claims are not obviously directed to a single invention. See Instruction Sheet.

3. This request is accompanied by statements of special status for the eligibility requirement.

4. The application contains no more than three (3) independent claims and twenty (20) total claims.

5. The application does not contain any multiple dependent claims.

6. Other attachments: _____

| Signature /Jonathan D. Cutler/ | Date 2011-03-23 |
|---|---|
| Name (Print/Typed) Jonathan D. Cutler | Registration Number 40576 |

***Note:*** *Signatures of all the inventors or assignees of record of the entire interest or their representative(s) are required in accordance with 37 CFR 1.33 and 11.18. Please see 37 CFR 1.4(d) for the form of the signature. If necessary, submit multiple forms for more than one signature see below*.*

☒ *Total of 1 forms are submitted.

The information is required to obtain or retain a benefit by the public which is to file (and by the USPTO to process) an application. Confidentiality is governed by 35 U.S.C. 122 and 37 CFR 1.11 and 1.14. This collection is estimated to take 12 hours to complete, including gathering, preparing, and submitting the completed application form to the USPTO. Time will vary depending upon the individual case. Any comments on the amount of time you require to complete this form and/or suggestions for reducing this burden, should be sent to the Chief Information Officer, U.S. Patent and Trademark Office, U.S. Department of Commerce, P.O. Box 1450, Alexandria, VA 22313-1450. DO NOT SEND FEES OR COMPLETED FORMS TO THIS ADDRESS. **SEND TO: Commissioner for Patents, P.O. Box 1450, Alexandria, VA 22313-1450.**

*If you need assistance in completing the form, call 1-800-PTO-9199 and select option 2.*

PTO/SB/420 (11-10)
Approved for use through 01/31/2011. OMB 0651-0062
U.S. Patent and Trademark Office; U. S. DEPARTMENT OF COMMERCE
Under the Paperwork Reduction Act of 1995, no persons are required to respond to a collection of information unless it displays a valid OMB control number.

# Instruction Sheet for Petition to Make Special Under the Green Technology Pilot Program

(Not to be Submitted to the USPTO)

**The following is a summary of the requirements (for more information see the notices (i) "Pilot Program for Green Technologies Including Greenhouse Gas Reduction," (ii) "Elimination of Classification Requirement in the Green Technology Pilot Program," and (iii) "Expansion and Extension of the Green Technology Pilot Program," available on the USPTO web site at http://www.uspto.gov/patents/init_events/green_tech.jsp):**

1) The application must be a non-reissue, non-provisional utility application filed under 35 U.S.C. 111 (a), or an international application that has entered the national stage in compliance with 35 U.S.C. 371, irrespective of the filing date of the application. Reexamination proceedings are excluded from this pilot program.

2) The application must contain three or fewer independent claims and twenty or fewer total claims. The application must not contain any multiple dependent claims. For an application that contains more than three independent claims or twenty total claims, or multiple dependent claims, applicant must file a preliminary amendment in compliance with 37 CFR 1.121 to cancel the excess claims and/or the multiple dependent claims at the time the petition to make special is filed.

3) The claims must be directed to a single invention that materially enhances the quality of the environment, or that materially contributes to: (1) the discovery or development of renewable energy resources; (2) the more efficient utilization and conservation of energy resources; or (3) green house gas emission reduction (see the eligibility requirements of sections II and III of the notice (i) cited above). The petition must include a statement that, if the USPTO determines that the claims are directed to multiple inventions (e.g., in a restriction requirement), applicant will agree to make an election without traverse in a telephonic interview, and elect an invention that meets the eligibility requirements in section II or III of the notice (i) cited above.

4) The petition to make special must be timely filed electronically using the USPTO electronic filing system, EFS-Web, and selecting the document description of "Petition for Green Tech Pilot" on the EFS-Web screen. Applicant should use form PTO/SB/420, which is available as a Portable Document Format (PDF) fillable form in EFS-Web and on the USPTO Web site.

5) The petition to make special must be filed at least one day prior to the date that a first Office action (which may be an Office action containing only a restriction requirement) appears in the Patent Application Information Retrieval (PAIR) system. Applicant may check the status of the application using PAIR.

6) The petition to make special must be accompanied by a request for early publication in compliance with 37 CFR 1.219 and the publication fee set forth in 37 CFR 1.18(d).

## Privacy Act Statement

The **Privacy Act of 1974 (P.L. 93-579)** requires that you be given certain information in connection with your submission of the attached form related to a patent application or patent. Accordingly, pursuant to the requirements of the Act, please be advised that: (1) the general authority for the collection of this information is 35 U.S.C. 2(b)(2); (2) furnishing of the information solicited is voluntary; and (3) the principal purpose for which the information is used by the U.S. Patent and Trademark Office is to process and/or examine your submission related to a patent application or patent. If you do not furnish the requested information, the U.S. Patent and Trademark Office may not be able to process and/or examine your submission, which may result in termination of proceedings or abandonment of the application or expiration of the patent.

The information provided by you in this form will be subject to the following routine uses:

1. The information on this form will be treated confidentially to the extent allowed under the Freedom of Information Act (5 U.S.C. 552) and the Privacy Act (5 U.S.C 552a). Records from this system of records may be disclosed to the Department of Justice to determine whether disclosure of these records is required by the Freedom of Information Act.
2. A record from this system of records may be disclosed, as a routine use, in the course of presenting evidence to a court, magistrate, or administrative tribunal, including disclosures to opposing counsel in the course of settlement negotiations.
3. A record in this system of records may be disclosed, as a routine use, to a Member of Congress submitting a request involving an individual, to whom the record pertains, when the individual has requested assistance from the Member with respect to the subject matter of the record.
4. A record in this system of records may be disclosed, as a routine use, to a contractor of the Agency having need for the information in order to perform a contract. Recipients of information shall be required to comply with the requirements of the Privacy Act of 1974, as amended, pursuant to 5 U.S.C. 552a(m).
5. A record related to an International Application filed under the Patent Cooperation Treaty in this system of records may be disclosed, as a routine use, to the International Bureau of the World Intellectual Property Organization, pursuant to the Patent Cooperation Treaty.
6. A record in this system of records may be disclosed, as a routine use, to another federal agency for purposes of National Security review (35 U.S.C. 181) and for review pursuant to the Atomic Energy Act (42 U.S.C. 218(c)).
7. A record from this system of records may be disclosed, as a routine use, to the Administrator, General Services, or his/her designee, during an inspection of records conducted by GSA as part of that agency's responsibility to recommend improvements in records management practices and programs, under authority of 44 U.S.C. 2904 and 2906. Such disclosure shall be made in accordance with the GSA regulations governing inspection of records for this purpose, and any other relevant (*i.e.*, GSA or Commerce) directive. Such disclosure shall not be used to make determinations about individuals.
8. A record from this system of records may be disclosed, as a routine use, to the public after either publication of the application pursuant to 35 U.S.C. 122(b) or issuance of a patent pursuant to 35 U.S.C. 151. Further, a record may be disclosed, subject to the limitations of 37 CFR 1.14, as a routine use, to the public if the record was filed in an application which became abandoned or in which the proceedings were terminated and which application is referenced by either a published application, an application open to public inspection or an issued patent.
9. A record from this system of records may be disclosed, as a routine use, to a Federal, State, or local law enforcement agency, if the USPTO becomes aware of a violation or potential violation of law or regulation.

UNITED STATES PATENT AND TRADEMARK OFFICE

UNITED STATES DEPARTMENT OF COMMERCE
United States Patent and Trademark Office
Address: COMMISSIONER FOR PATENTS
P.O. Box 1450
Alexandria, Virginia 22313-1450
www.uspto.gov

| APPLICATION NO. | FILING DATE | FIRST NAMED INVENTOR | ATTORNEY DOCKET NO. | CONFIRMATION NO. |
|---|---|---|---|---|
| 13/007,910 | 01/17/2011 | John Paul MORGAN | 1121040 | 7751 |

92086 7590 04/06/2011

Osler Hoskin & Harcourt, LLP (Morgan Solar)
1000 De La Gauchetiere Street West
Suite 2100
Montreal, QC H3B4W5
CANADA

| EXAMINER | |
|---|---|
| ART UNIT | PAPER NUMBER |
| 2874 | |

| NOTIFICATION DATE | DELIVERY MODE |
|---|---|
| 04/06/2011 | ELECTRONIC |

**Please find below and/or attached an Office communication concerning this application or proceeding.**

The time period for reply, if any, is set in the attached communication.

Notice of the Office communication was sent electronically on above-indicated "Notification Date" to the following e-mail address(es):

ipmtl@osler.com

UNITED STATES PATENT AND TRADEMARK OFFICE

Commissioner for Patents
United States Patent and Trademark Office
P.O. Box 1450
Alexandria, VA 22313-1450
www.uspto.gov

Osler Hoskin & Harcourt, LLP (Morgan Solar)
1000 De La Gauchetiere Street West
Suite 2100
Montreal QC H3B4W-5 CA CANADA

| | | |
|---|---|---|
| In re Application of | : | |
| John Paul Morgan | : | DECISION ON PETITION |
| Application No. 13/007,910 | : | TO MAKE SPECIAL UNDER |
| Filed: January 17, 2011 | : | THE GREEN TECHNOLOGY |
| Attorney Docket No. 1121040 | : | PILOT PROGRAM |

This is a decision on the petition under 37 CFR 1.102, filed on March 23, 2011, to make the above-identified application special under the pilot program for applications pertaining to Green Technologies as set forth 74 Federal Register Notice 64666 (December 8, 2009) and amended by 75 Federal Register Notice 28554 (May 21, 2010) and 75 Federal Register Notice 69049 (November 10, 2010).

The petition is **GRANTED**.

A grantable petition to make an application special under 37 CFR 1.102 and the pilot program as set forth in 74 FR 64666 must be directed to a nonprovisional application filed under 35 USC 111(a) or be a national stage entry under 35 USC 371, exclusive of any reissue applications.

In order to qualify for special status, the following requirements must be met. 1) The application must have no more than 3 independent claims and no more than 20 total claims. 2) The application must not contain any multiple dependent claims. 3) The petition must state the basis for seeking special status, i.e., the claimed invention either: A) materially enhances the quality of the environment or B) materially contributes to: i) the discovery or development of renewable energy resources, ii) the more efficient utilization and conservation of energy resources, or iii) greenhouse gas emission reduction. 4) If the disclosure is not clear on its face that the claimed invention materially contributes under category (A) or (B), the petition must be accompanied by a statement by the applicant, assignee, or an attorney/agent registered to practice before the Office explaining how the materiality standard is met. 5) A statement that applicant will agree to make an election without traverse in a telephonic interview if a restriction requirement is made by the examiner. 6) The petition to make special must be filed electronically. 7) The petition must be filed at least one day prior to the date that a first Office Action appears in the Patent Application Information Retrieval (PAIR) system. 8) The petition must be accompanied by a request for early publication in compliance with 37 CFR 1.219 and include the publication fee as set forth in 37 CFR 1.18(d).

The requirement for a fee for consideration of the petition to make special for applications pertaining to Green Technologies has been waived.

The instant petition does not state the basis for seeking special status as required by condition 3 above but it is readily apparent that the claimed invention contributes to the discovery or development of renewable energy resources. Accordingly, the above-identified application has been accorded "special" status.

Telephone inquires concerning this decision should be directed to Lee W. Young at 571-272-4549.

The application is being forwarded to the Technology Center Art Unit 2874 for action in its regular turn.

Lee W. Young
Quality Assurance Specialist
Technology Center 2800

**Doc Code: PET.GREEN**
**Document Description: Petition for Green Tech Pilot**

PTO/SB/420 (03-11)

# PETITION TO MAKE SPECIAL UNDER THE GREEN TECHNOLOGY PILOT PROGRAM

| Attorney Docket Number: 13/008,004 | Application Number (if known): Lee_02NP_US | Filing date: Jan. 17, 2011 |
|---|---|---|

First Named Inventor: William Edward Lee

Title: Solar Powered Wheel Apparatus

**APPLICANT HEREBY REQUESTS TO PARTICIPATE IN THE GREEN TECHNOLOGY PILOT PROGRAM FOR THE ABOVE-IDENTIFIED APPLICATION.** **See Instruction Sheet on page 2.**

This petition must be timely filed electronically using the USPTO electronic filing system, EFS-Web.

1. By filing this petition:

   **Applicant is requesting early publication: Applicant hereby requests early publication under 37 CFR 1.219 and the publication fee set forth in 37 CFR 1.18(d) accompanies this request.**

2. By filing this petition: applicant is agreeing to make an election without traverse in a telephonic interview and elect an invention that meets the eligibility requirements for the Green Technology Pilot Program, if the Office determines that the claims are not obviously directed to a single invention. See Instruction Sheet.

3. This request is accompanied by statements of special status for the eligibility requirement.

4. The application contains no more than three (3) independent claims and twenty (20) total claims.

5. The application does not contain any multiple dependent claims.

6. Other attachments: Preliminary amendment

| Signature /a tankha/ | Date Nov. 03, 2011 |
|---|---|
| Name (Print/Typed) Ashok Tankha | Registration Number 33802 |

***Note:*** *Signatures of all the inventors or assignees of record of the entire interest or their representative(s) are required in accordance with 37 CFR 1.33 and 11.18. Please see 37 CFR 1.4(d) for the form of the signature. If necessary, submit multiple forms for more than one signature, see below*.*

☐ *Total of _____ forms are submitted.

*If you need assistance in completing the form, call 1-800-PTO-9199 and select option 2.*

# Instruction Sheet for
# Petition to Make Special Under the Green Technology Pilot Program

(Not to be Submitted to the USPTO)

***The following is a summary of the requirements (for more information see the notices (i) "Pilot Program for Green Technologies Including Greenhouse Gas Reduction," (ii) "Elimination of Classification Requirement in the Green Technology Pilot Program," and (iii) "Expansion and Extension of the Green Technology Pilot Program," available on the USPTO web site at http://www.uspto.gov/patents/init_events/green_tech.jsp):***

(1) The application must be a non-reissue, non-provisional utility application filed under 35 U.S.C. 111(a), or an international application that has entered the national stage in compliance with 35 U.S.C. 371, irrespective of the filing date of the application. Reexamination proceedings are excluded from this pilot program.

(2) The application must contain three or fewer independent claims and twenty or fewer total claims. The application must not contain any multiple dependent claims. For an application that contains more than three independent claims or twenty total claims, or multiple dependent claims, applicant must file a preliminary amendment in compliance with 37 CFR 1.121 to cancel the excess claims and/or the multiple dependent claims at the time the petition to make special is filed.

(3) The claims must be directed to a single invention that materially enhances the quality of the environment, or that materially contributes to: (1) the discovery or development of renewable energy resources; (2) the more efficient utilization and conservation of energy resources; or (3) green house gas emission reduction (see the eligibility requirements of sections II and III of the notice (i) cited above). The petition must include a statement that, if the USPTO determines that the claims are directed to multiple inventions (e.g., in a restriction requirement), applicant will agree to make an election without traverse in a telephonic interview, and elect an invention that meets the eligibility requirements in section II or III of the notice (i) cited above.

(4) The petition to make special must be timely filed electronically using the USPTO electronic filing system, EFS-Web, and selecting the document description of "Petition for Green Tech Pilot" on the EFS-Web screen. Applicant should use form PTO/SB/420, which is available as a Portable Document Format (PDF) fillable form in EFS-Web and on the USPTO Web site.

(5) The petition to make special must be filed at least one day prior to the date that a first Office action (which may be an Office action containing only a restriction requirement) appears in the Patent Application Information Retrieval (PAIR) system. Applicant may check the status of the application using PAIR.

(6) The petition to make special must be accompanied by a request for early publication in compliance with 37 CFR 1.219 and the publication fee set forth in 37 CFR 1.18(d).

# Privacy Act Statement

The **Privacy Act of 1974 (P.L. 93-579)** requires that you be given certain information in connection with your submission of the attached form related to a patent application or patent. Accordingly, pursuant to the requirements of the Act, please be advised that: (1) the general authority for the collection of this information is 35 U.S.C. 2(b)(2); (2) furnishing of the information solicited is voluntary; and (3) the principal purpose for which the information is used by the U.S. Patent and Trademark Office is to process and/or examine your submission related to a patent application or patent. If you do not furnish the requested information, the U.S. Patent and Trademark Office may not be able to process and/or examine your submission, which may result in termination of proceedings or abandonment of the application or expiration of the patent.

The information provided by you in this form will be subject to the following routine uses:

1. The information on this form will be treated confidentially to the extent allowed under the Freedom of Information Act (5 U.S.C. 552) and the Privacy Act (5 U.S.C 552a). Records from this system of records may be disclosed to the Department of Justice to determine whether disclosure of these records is required by the Freedom of Information Act.
2. A record from this system of records may be disclosed, as a routine use, in the course of presenting evidence to a court, magistrate, or administrative tribunal, including disclosures to opposing counsel in the course of settlement negotiations.
3. A record in this system of records may be disclosed, as a routine use, to a Member of Congress submitting a request involving an individual, to whom the record pertains, when the individual has requested assistance from the Member with respect to the subject matter of the record.
4. A record in this system of records may be disclosed, as a routine use, to a contractor of the Agency having need for the information in order to perform a contract. Recipients of information shall be required to comply with the requirements of the Privacy Act of 1974, as amended, pursuant to 5 U.S.C. 552a(m).
5. A record related to an International Application filed under the Patent Cooperation Treaty in this system of records may be disclosed, as a routine use, to the International Bureau of the World Intellectual Property Organization, pursuant to the Patent Cooperation Treaty.
6. A record in this system of records may be disclosed, as a routine use, to another federal agency for purposes of National Security review (35 U.S.C. 181) and for review pursuant to the Atomic Energy Act (42 U.S.C. 218(c)).
7. A record from this system of records may be disclosed, as a routine use, to the Administrator, General Services, or his/her designee, during an inspection of records conducted by GSA as part of that agency's responsibility to recommend improvements in records management practices and programs, under authority of 44 U.S.C. 2904 and 2906. Such disclosure shall be made in accordance with the GSA regulations governing inspection of records for this purpose, and any other relevant (*i.e.*, GSA or Commerce) directive. Such disclosure shall not be used to make determinations about individuals.
8. A record from this system of records may be disclosed, as a routine use, to the public after either publication of the application pursuant to 35 U.S.C. 122(b) or issuance of a patent pursuant to 35 U.S.C. 151. Further, a record may be disclosed, subject to the limitations of 37 CFR 1.14, as a routine use, to the public if the record was filed in an application which became abandoned or in which the proceedings were terminated and which application is referenced by either a published application, an application open to public inspection or an issued patent.
9. A record from this system of records may be disclosed, as a routine use, to a Federal, State, or local law enforcement agency, if the USPTO becomes aware of a violation or potential violation of law or regulation.

**IN THE UNITED STATES PATENT AND TRADEMARK OFFICE**

In re. application of:
Application No.: 13/008,004
Filed: Jan. 17, 2011
Applicant: William Edward Lee
Title: Solar Powered Wheel Apparatus

Examiner: Phan, Hau Van
Art Unit: 3618
Docket No.: Lee_02NP_US

Commissioner for Patents
P.O. Box 1450
Alexandria, VA 22313-1450

**Petition to Make Special under The Green Technology Pilot Program**

Examiner Phan:

Applicant herewith requests the above identified application to be examined under the Green Technology Pilot Program.

**Remarks** begin on page 2 of this response.

**Attachments:**
1. Transmittal form, PTO/SB/21;
2. Preliminary amendment;
3. Petition to make special under the Green Technology Pilot Program, Form PTO/SB/420; and
4. Payment of the following fee:
   -$300 for publication fee set forth in 37 C.F.R. 1.18(d).

The Director is hereby authorized to charge any underpayment of fee or any other fee that may be required to deposit account # 503291.

## Remarks

*The present invention and the pending claims*

This invention relates generally to a solar powered wheel apparatus. Specifically, this invention relates to an apparatus comprising one or more photovoltaic cells housed on a rotatable element connected to a rotary object such as a wheel, an electric motor, and an axial shaft.

By filing the attached petition, applicant agrees to pay the publication fee as set forth in 37 C.F.R. 1.18(d). Since the application was published on July 21, 2011, it is believed that there is no need to request for early publication under 37 C.F.R. 1.219.

By filing this petition, applicant agrees to make an election without traverse in a telephonic interview and elect an invention that meets the eligibility requirements for the Green Technology Pilot Program, if the Office determines that the claims are not obviously directed to a single invention.

A preliminary amendment has been submitted herewith to reduce the number of outstanding claims to no more than three (3) independent claims and twenty (20) total claims.

The application does not contain any multiple dependent claims.

## STATEMENT CONCERNING THE BASIS FOR THE SPECIAL STATUS

The basis for the special status is that the invention claimed in the above-identified patent application materially contributes to the development and utilization of renewable energy resources. The claimed invention relates to a solar powered wheel apparatus. The solar powered wheel apparatus can be utilized as a wheel of a vehicle, a rotor of a helicopter, a rotating amusement riding apparatus such as a carousel, a flying toy, etc.

Respectfully submitted,

Date: Nov. 03, 2011

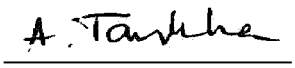

Ashok Tankha
Attorney For Applicant
Lipton Weinberger & Husick
Reg. No. 33,802
Phone: 856-266-5145

Correspondence Address
Lipton, Weinberger & Husick
36 Greenleigh Drive
Sewell, NJ 08080
Fax: 856-374-0246
Email: ash@ipprocure.com

UNITED STATES PATENT AND TRADEMARK OFFICE

UNITED STATES DEPARTMENT OF COMMERCE
United States Patent and Trademark Office
Address: COMMISSIONER FOR PATENTS
P.O. Box 1450
Alexandria, Virginia 22313-1450
www.uspto.gov

| APPLICATION NO. | FILING DATE | FIRST NAMED INVENTOR | ATTORNEY DOCKET NO. | CONFIRMATION NO. |
|---|---|---|---|---|
| 13/008,004 | 01/17/2011 | William Edward Lee | Lee_02NP_US | 7938 |

7590 11/17/2011

Ashok Tankha
36 Greenleigh Drive
Sewell, NJ 08080

| EXAMINER | |
|---|---|
| SHRIVER II, JAMES A | |

| ART UNIT | PAPER NUMBER |
|---|---|
| 3618 | |

| MAIL DATE | DELIVERY MODE |
|---|---|
| 11/17/2011 | PAPER |

**Please find below and/or attached an Office communication concerning this application or proceeding.**

The time period for reply, if any, is set in the attached communication.

UNITED STATES PATENT AND TRADEMARK OFFICE

Commissioner for Patents
United States Patent and Trademark Office
P.O. Box 1450
Alexandria, VA 22313-1450
www.uspto.gov

Ashok Tankha
36 Greenleigh Drive
Sewell NJ 08080

NOV 17 2011

| | | |
|---|---|---|
| In re Application of | : | |
| Lee et al. | : | DECISION ON PETITION |
| Application No. 13/008,004 | : | TO MAKE SPECIAL UNDER |
| Filed: 1/17/2011 | : | THE GREEN TECHNOLOGY |
| Attorney Docket No. **Lee_02NP_US** | : | PILOT PROGRAM |

This is a decision on the petition under 37 CFR 1.102, filed 11/3/2011, to make the above-identified application special under the pilot program for applications pertaining to Green Technologies as set forth in 74 Federal Register Notice 64666 (December 8, 2009) and amended by 75 Federal Register Notice 28554 (May 21, 2010) and 75 Federal Register Notice 69049 (November 10, 2010).

The petition is **GRANTED**.

A grantable petition to make an application special under 37 CFR 1.102 and the pilot program as set forth in 74 FR 64666 must be directed to a nonprovisional application filed under 35 USC 111(a) or be a national stage entry under 35 USC 371, exclusive of any reissue applications.

In order to qualify for special status, the following requirements must be met. 1) The application must have no more than 3 independent claims and no more than 20 total claims. 2) The application must not contain any multiple dependent claims. 3) The petition must state the basis for seeking special status, i.e., the claimed invention either: A) materially enhances the quality of the environment or B) materially contributes to: i) the discovery or development of renewable energy resources, ii) the more efficient utilization and conservation of energy resources, or iii) greenhouse gas emission reduction. 4) If the disclosure is not clear on its face that the claimed invention materially contributes under category (A) or (B), the petition must be accompanied by a statement by the applicant, assignee, or an attorney/agent registered to practice before the Office explaining how the materiality standard is met. 5) A statement that applicant will agree to make an election without traverse in a telephonic interview if a restriction requirement is made by the examiner. 6) The petition to make special must be filed electronically. 7) The petition must be filed at least one day prior to the date that a first Office Action appears in the Patent Application Information Retrieval (PAIR) system. 8) The petition must be accompanied by a request for early publication in compliance with 37 CFR 1.219 and include the publication fee as set forth in 37 CFR 1.18(d).

The requirement for a fee for consideration of the petition to make special for applications pertaining to Green Technologies has been waived.

The instant petition complies with items 1 – 8 above. Accordingly, the above-identified application has been accorded "special" status.

Telephone inquires concerning this decision should be directed to Tom Dunn at 571-272-1171.

The application is being forwarded to the Technology Center Art Unit 3618 for action on the merits commensurate with this decision.

/Tom Dunn/

Tom Dunn
Quality Assurance Specialist
Technology Center 1700

Doc Code: PET.AUTO
Doc Description: Petition Automatically granted by EFS

PTO/SB/130 (03-08)
Approved for use through 03/31/2008. OMB 0651- 0031
U.S. Patent and Trademark Office; U.S. DEPARTMENT OF COMMERCE
Under the Paperwork Reduction Act of 1995, no persons are required to respond to a collection of information unless it contains a valid OMB control number

# PETITION TO MAKE SPECIAL BASED ON AGE FOR ADVANCEMENT OF EXAMINATION UNDER 37 CFR 1.102(c)(1)

## Application Information

| | | | | | |
|---|---|---|---|---|---|
| Application Number | 13008063 | Confirmation Number | 8045 | Filing Date | 2008-11-14 |
| Attorney Docket Number (optional) | A042 P01383-US5 | Art Unit | | Examiner | Not Available |
| First Named Inventor | Richard E. Swan | | | | |
| Title of Invention | MOUNTING ASSEMBLY WITH ADJUSTABLE SPRING TENSION AND PIVOTING LEVER LOCK | | | | |

**Attention: Office of Petitions**
An application may be made special for advancement of examination upon filing of a petition showing that the applicant is 65 years of age, or more. No fee is required with such a petition. See 37 CFR 1.102(c)(1) and MPEP 708.02 (IV).

APPLICANT HEREBY PETITIONS TO MAKE SPECIAL FOR ADVANCEMENT OF EXAMINATION IN THIS APPLICATION UNDER 37 CFR 1.102(c)(1) and MPEP 708.02 (IV) ON THE BASIS OF THE APPLICANT'S AGE.

A grantable petition requires one of the following items:
(1) Statement by one named inventor in the application that he/she is 65 years of age, or more; or
(2) Certification by a registered attorney/agent having evidence such as a birth certificate, passport, driver's license, etc. showing one named inventor in the application is 65 years of age, or more.

**Name of Inventor who is 65 years of age, or older**

| Given Name | Middle Name | Family Name | Suffix |
|---|---|---|---|
| Richard | E. | Swan | |

A signature of the applicant or representative is required in accordance with 37 CFR 1.33 and 10.18.
Please see 37 CFR 1.4(d) for the format of the signature.

Select (1) or (2) :

○ (1) I am an inventor in this application and I am 65 years of age, or more.

◉ (2) I am an attorney or agent registered to practice before the Patent and Trademark Office, and I certify that I am in possession of evidence, and will retain such in the application file record, showing that the inventor listed above is 65 years of age, or more.

| | | | |
|---|---|---|---|
| Signature | /Joshua A. Stockwell/ | Date (YYYY-MM-DD) | 2011-01-18 |
| Name | Joshua A. Stockwell | Registration Number | 54580 |

Doc Code: PET.AUTO
Doc Description: Petition Automatically granted by EFS

PTO/SB/130 (03-08)
Approved for use through 03/31/2008. OMB 0651- 0031
U.S. Patent and Trademark Office; U.S. DEPARTMENT OF COMMERCE
Under the Paperwork Reduction Act of 1995, no persons are required to respond to a collection of information unless it contains a valid OMB control number

# Privacy Act Statement

The Privacy Act of 1974 (P.L. 93-579) requires that you be given certain information in connection with your submission of the attached form related to a patent application or patent. Accordingly, pursuant to the requirements of the Act, please be advised that: (1) the general authority for the collection of this information is 35 U.S.C. 2(b)(2); (2) furnishing of the information solicited is voluntary; and (3) the principal purpose for which the information is used by the U.S. Patent and Trademark Office is to process and/or examine your submission related to a patent application or patent. If you do not furnish the requested information, the U.S. Patent and Trademark Office may not be able to process and/or examine your submission, which may result in termination of proceedings or abandonment of the application or expiration of the patent.

The information provided by you in this form will be subject to the following routine uses:

1. The information on this form will be treated confidentially to the extent allowed under the Freedom of Information Act (5 U.S.C. 552) and the Privacy Act (5 U.S.C. 552a). Records from this system of records may be disclosed to the Department of Justice to determine whether the Fr eedom of Information Act requires disclosure of these records.

2. A record from this system of records may be disclosed, as a routine use, in the course of presenting evidence to a court, magistrate, or administrative tribunal, including disclosures to opposing counsel in the course of settlement negotiations.

3. A record in this system of records may be disclosed, as a routine use, to a Member of Congress submitting a request involving an individual, to whom the record pertains, when the individual has requested assistance from the Member with respect to the subject matter of the record.

4. A record in this system of records may be disclosed, as a routine use, to a contractor of the Agency having need for the information in order to perform a contract. Recipients of information shall be required to comply with the requirements of the Privacy Act of 1974, as amended, pursuant to 5 U.S.C. 552a(m).

5. A record related to an International Application filed under the Patent Cooperation Treaty in this system of records may be disclosed, as a routine use, to the International Bureau of the World Intellectual Property Organization, pursuant to the Patent Cooperation Treaty.

6. A record in this system of records may be disclosed, as a routine use, to another federal agency for purposes of National Security review (35 U.S.C. 181) and for review pursuant to the Atomic Energy Act (42 U.S.C. 218(c)).

7. A record from this system of records may be disclosed, as a routine use, to the Administrator, General Services, or his/her designee, during an inspection of records conducted by GSA as part of that agency's responsibility to recommend improvements in records management practices and programs, under authority of 44 U.S.C. 2904 and 2906. Such disclosure shall be made in accordance with the GSA regulations governing inspection of records for this purpose, and any other relevant (i.e., GSA or Commerce) directive. Such disclosure shall not be used to make determinations about indivi duals.

8. A record from this system of records may be disclosed, as a routine use, to the public after either publication of the application pursuant to 35 U.S.C. 122(b) or issuance of a patent pursuant to 35 U.S.C. 151. Further, a record may be disclosed, subject to the limitations of 37 CFR 1.14, as a routine use, to the public if the record was filed in an application which became abandoned or in which the proceedings were terminated and which application is referenced by either a published application, an application open to public inspections or an issued patent.

9. A record from this system of records may be disclosed, as a routine use, to a Federal, State, or local law enforcement agency, if the USPTO becomes aware of a violation or potential violation of law or regulation.

UNITED STATES PATENT AND TRADEMARK OFFICE

Commissioner for Patents
United States Patent and Trademark Office
P.O. Box 1450
Alexandria, VA 22313-1450
www.uspto.gov

In re Application of
RICHARD E. SWAN

Application No. 13008063
Filed:

Attorney Docket No. A042 P01383-US5

:
:
:DECISION ON PETITION TO MAKE SPECIAL
:UNDER 37 CFR 1.102(c)(1)
:

This is a decision on the electronic petition under 37 CFR 1.102 (c)(1), filed 18-JAN-2011 to make the above-identified application special based on applicant's age as set forth in MPEP § 708.02, Section IV.

The petition is **GRANTED**.

A grantable petition to make an application special under 37 CFR 1.102(c)(1), MPEP § 708.02, Section IV: Applicant's Age must include a statement by applicant or a registered practitioner having evidence that applicant is at least 65 years of age. No fee is required.

Accordingly, the above-identified application has been accorded "special" status and will be taken up for action by the examiner upon the completion of all pre-examination processing.

Telephone inquiries concerning this electronic decision should be directed to the Electronic Business Center at 866-217-9197.

All other inquiries concerning either the examination or status of the application should be directed to the Technology Center.

**Doc Code: PET.GREEN**
**Document Description: Petition for Green Tech Pilot**

PTO/SB/420 (11-10)
Approved for use through 01/31/2011. OMB 0651-0062
U.S. Patent and Trademark Office; U. S. DEPARTMENT OF COMMERCE
Under the Paperwork Reduction Act of 1995, no persons are required to respond to a collection of information unless it displays a valid OMB control number.

# PETITION TO MAKE SPECIAL UNDER THE GREEN TECHNOLOGY PILOT PROGRAM

| Attorney Docket Number: JA.1502 | Application Number (if known): | Filing date: 2011-01-18 |
|---|---|---|
| First Named Inventor: Janne Aaltonen | | |
| Title: Generating Hydroenergy | | |

**APPLICANT HEREBY REQUESTS TO PARTICIPATE IN THE GREEN TECHNOLOGY PILOT PROGRAM FOR THE ABOVE-IDENTIFIED APPLICATION. See Instruction Sheet on page 2.**

This petition must be timely filed electronically using the USPTO electronic filing system, EFS-Web.

1. By filing this petition:

   **Applicant is requesting early publication: Applicant hereby requests early publication under 37 CFR 1.219 and the publication fee set forth in 37 CFR 1.18(d) accompanies this request.**

2. By filing this petition: applicant is agreeing to make an election without traverse in a telephonic interview and elect an invention that meets the eligibility requirements for the Green Technology Pilot Program, if the Office determines that the claims are not obviously directed to a single invention. See Instruction Sheet.

3. This request is accompanied by statements of special status for the eligibility requirement.

4. The application contains no more than three (3) independent claims and twenty (20) total claims.

5. The application does not contain any multiple dependent claims.

6. Other attachments: _____

| Signature /gcz44004/ | Date 2011-01-17 |
|---|---|
| Name (Print/Typed) Geza C. Ziegler, Jr | Registration Number 44004 |

***Note:*** *Signatures of all the inventors or assignees of record of the entire interest or their representative(s) are required in accordance with 37 CFR 1.33 and 11.18. Please see 37 CFR 1.4(d) for the form of the signature. If necessary, submit multiple forms for more than one signature see below*.*

☐ *Total of ..... forms are submitted.

The information is required to obtain or retain a benefit by the public which is to file (and by the USPTO to process) an application. Confidentiality is governed by 35 U.S.C. 122 and 37 CFR 1.11 and 1.14. This collection is estimated to take 12 hours to complete, including gathering, preparing, and submitting the completed application form to the USPTO. Time will vary depending upon the individual case. Any comments on the amount of time you require to complete this form and/or suggestions for reducing this burden, should be sent to the Chief Information Officer, U.S. Patent and Trademark Office, U.S. Department of Commerce, P.O. Box 1450, Alexandria, VA 22313-1450. DO NOT SEND FEES OR COMPLETED FORMS TO THIS ADDRESS. **SEND TO: Commissioner for Patents, P.O. Box 1450, Alexandria, VA 22313-1450.**

*If you need assistance in completing the form, call 1-800-PTO-9199 and select option 2.*

PTO/SB/420 (11-10)
Approved for use through 01/31/2011. OMB 0651-0062
U.S. Patent and Trademark Office; U. S. DEPARTMENT OF COMMERCE
Under the Paperwork Reduction Act of 1995, no persons are required to respond to a collection of information unless it displays a valid OMB control number.

# Instruction Sheet for Petition to Make Special Under the Green Technology Pilot Program

(Not to be Submitted to the USPTO)

**The following is a summary of the requirements (for more information see the notices (i) "Pilot Program for Green Technologies Including Greenhouse Gas Reduction," (ii) "Elimination of Classification Requirement in the Green Technology Pilot Program," and (iii) "Expansion and Extension of the Green Technology Pilot Program," available on the USPTO web site at http://www.uspto.gov/patents/init_events/green_tech.jsp):**

1) The application must be a non-reissue, non-provisional utility application filed under 35 U.S.C. 111 (a), or an international application that has entered the national stage in compliance with 35 U.S.C. 371, irrespective of the filing date of the application. Reexamination proceedings are excluded from this pilot program.

2) The application must contain three or fewer independent claims and twenty or fewer total claims. The application must not contain any multiple dependent claims. For an application that contains more than three independent claims or twenty total claims, or multiple dependent claims, applicant must file a preliminary amendment in compliance with 37 CFR 1.121 to cancel the excess claims and/or the multiple dependent claims at the time the petition to make special is filed.

3) The claims must be directed to a single invention that materially enhances the quality of the environment, or that materially contributes to: (1) the discovery or development of renewable energy resources; (2) the more efficient utilization and conservation of energy resources; or (3) green house gas emission reduction (see the eligibility requirements of sections II and III of the notice (i) cited above). The petition must include a statement that, if the USPTO determines that the claims are directed to multiple inventions (e.g., in a restriction requirement), applicant will agree to make an election without traverse in a telephonic interview, and elect an invention that meets the eligibility requirements in section II or III of the notice (i) cited above.

4) The petition to make special must be timely filed electronically using the USPTO electronic filing system, EFS-Web, and selecting the document description of "Petition for Green Tech Pilot" on the EFS-Web screen. Applicant should use form PTO/SB/420, which is available as a Portable Document Format (PDF) fillable form in EFS-Web and on the USPTO Web site.

5) The petition to make special must be filed at least one day prior to the date that a first Office action (which may be an Office action containing only a restriction requirement) appears in the Patent Application Information Retrieval (PAIR) system. Applicant may check the status of the application using PAIR.

6) The petition to make special must be accompanied by a request for early publication in compliance with 37 CFR 1.219 and the publication fee set forth in 37 CFR 1.18(d).

## Privacy Act Statement

The **Privacy Act of 1974 (P.L. 93-579)** requires that you be given certain information in connection with your submission of the attached form related to a patent application or patent. Accordingly, pursuant to the requirements of the Act, please be advised that: (1) the general authority for the collection of this information is 35 U.S.C. 2(b)(2); (2) furnishing of the information solicited is voluntary; and (3) the principal purpose for which the information is used by the U.S. Patent and Trademark Office is to process and/or examine your submission related to a patent application or patent. If you do not furnish the requested information, the U.S. Patent and Trademark Office may not be able to process and/or examine your submission, which may result in termination of proceedings or abandonment of the application or expiration of the patent.

The information provided by you in this form will be subject to the following routine uses:

1. The information on this form will be treated confidentially to the extent allowed under the Freedom of Information Act (5 U.S.C. 552) and the Privacy Act (5 U.S.C 552a). Records from this system of records may be disclosed to the Department of Justice to determine whether disclosure of these records is required by the Freedom of Information Act.
2. A record from this system of records may be disclosed, as a routine use, in the course of presenting evidence to a court, magistrate, or administrative tribunal, including disclosures to opposing counsel in the course of settlement negotiations.
3. A record in this system of records may be disclosed, as a routine use, to a Member of Congress submitting a request involving an individual, to whom the record pertains, when the individual has requested assistance from the Member with respect to the subject matter of the record.
4. A record in this system of records may be disclosed, as a routine use, to a contractor of the Agency having need for the information in order to perform a contract. Recipients of information shall be required to comply with the requirements of the Privacy Act of 1974, as amended, pursuant to 5 U.S.C. 552a(m).
5. A record related to an International Application filed under the Patent Cooperation Treaty in this system of records may be disclosed, as a routine use, to the International Bureau of the World Intellectual Property Organization, pursuant to the Patent Cooperation Treaty.
6. A record in this system of records may be disclosed, as a routine use, to another federal agency for purposes of National Security review (35 U.S.C. 181) and for review pursuant to the Atomic Energy Act (42 U.S.C. 218(c)).
7. A record from this system of records may be disclosed, as a routine use, to the Administrator, General Services, or his/her designee, during an inspection of records conducted by GSA as part of that agency's responsibility to recommend improvements in records management practices and programs, under authority of 44 U.S.C. 2904 and 2906. Such disclosure shall be made in accordance with the GSA regulations governing inspection of records for this purpose, and any other relevant (*i.e.*, GSA or Commerce) directive. Such disclosure shall not be used to make determinations about individuals.
8. A record from this system of records may be disclosed, as a routine use, to the public after either publication of the application pursuant to 35 U.S.C. 122(b) or issuance of a patent pursuant to 35 U.S.C. 151. Further, a record may be disclosed, subject to the limitations of 37 CFR 1.14, as a routine use, to the public if the record was filed in an application which became abandoned or in which the proceedings were terminated and which application is referenced by either a published application, an application open to public inspection or an issued patent.
9. A record from this system of records may be disclosed, as a routine use, to a Federal, State, or local law enforcement agency, if the USPTO becomes aware of a violation or potential violation of law or regulation.

UNITED STATES PATENT AND TRADEMARK OFFICE

UNITED STATES DEPARTMENT OF COMMERCE
United States Patent and Trademark Office
Address: COMMISSIONER FOR PATENTS
P.O. Box 1450
Alexandria, Virginia 22313-1450
www.uspto.gov

| APPLICATION NO. | FILING DATE | FIRST NAMED INVENTOR | ATTORNEY DOCKET NO. | CONFIRMATION NO. |
|---|---|---|---|---|
| 13/008,107 | 01/18/2011 | Janne Aaltonen | JA.1502 | 8137 |

93582 7590 12/14/2011

ZIEGLER IP LAW GROUP, LLC.
518 RIVERSIDE AVENUE
BUILDING B (Synergy)
WESTPORT, CT 06880

| EXAMINER | |
|---|---|
| ART UNIT | PAPER NUMBER |
| 2839 | |

| NOTIFICATION DATE | DELIVERY MODE |
|---|---|
| 12/14/2011 | ELECTRONIC |

**Please find below and/or attached an Office communication concerning this application or proceeding.**

The time period for reply, if any, is set in the attached communication.

Notice of the Office communication was sent electronically on above-indicated "Notification Date" to the following e-mail address(es):

ptomail@gziplaw.com
gziplaw@gmail.com

UNITED STATES PATENT AND TRADEMARK OFFICE

Commissioner for Patents
United States Patent and Trademark Office
P.O. Box 1450
Alexandria, VA 22313-1450
www.uspto.gov

ZIEGLER IP LAW GROUP, LLC.
518 RIVERSIDE AVENUE
BUILDING B (Synergy)
WESTPORT CT 06880

DEC 14 2011

In re Application of :
AALTONEN et al. : DECISION ON PETITION
Application No. 13/008,107 : TO MAKE SPECIAL UNDER
Filed: January 18, 2011 : THE GREEN TECHNOLOGY
Attorney Docket No. JA.1502 : PILOT PROGRAM

This is a decision on the petition under 37 CFR 1.102, filed on January 18, 2011, to make the above-identified application special under the pilot program for applications pertaining to Green Technologies as set forth 74 Federal Register Notice 64666 (December 8, 2009) and amended by 75 Federal Register Notice 28554 (May 21, 2010) and 75 Federal Register Notice 69049 (November 10, 2010).

The petition is **GRANTED**.

A grantable petition to make an application special under 37 CFR 1.102 and the pilot program as set forth in 74 FR 64666 must be directed to a nonprovisional application filed under 35 USC 111(a) or be a national stage entry under 35 USC 371, exclusive of any reissue applications.

In order to qualify for special status, the following requirements must be met. 1) The application must have no more than 3 independent claims and no more than 20 total claims. 2) The application must not contain any multiple dependent claims. 3) The petition must state the basis for seeking special status, i.e., the claimed invention either: A) materially enhances the quality of the environment or B) materially contributes to: i) the discovery or development of renewable energy resources, ii) the more efficient utilization and conservation of energy resources, or iii) greenhouse gas emission reduction. 4) If the disclosure is not clear on its face that the claimed invention materially contributes under category (A) or (B), the petition must be accompanied by a statement by the applicant, assignee, or an attorney/agent registered to practice before the Office explaining how the materiality standard is met. 5) A statement that applicant will agree to make an election without traverse in a telephonic interview if a restriction requirement is made by the examiner. 6) The petition to make special must be filed electronically. 7) The petition must be filed at least one day prior to the date that a first Office Action appears in the Patent Application Information Retrieval (PAIR) system. 8) The petition must be accompanied by a request for early publication in compliance with 37 CFR 1.219 and include the publication fee as set forth in 37 CFR 1.18(d).

The requirement for a fee for consideration of the petition to make special for applications pertaining to Green Technologies has been waived.

The instant petition complies with items 1 – 8 above. Accordingly, the above-identified application has been accorded "special" status.

Telephone inquires concerning this decision should be directed to Colleen Dunn at 571-272-1170.

The application is being forwarded to the appropriate Technology Center Art Unit for action on the merits commensurate with this decision.

/Colleen Dunn/

Colleen Dunn
TQAS, TC 2800

UNITED STATES PATENT AND TRADEMARK OFFICE

UNITED STATES DEPARTMENT OF COMMERCE
United States Patent and Trademark Office
Address: COMMISSIONER FOR PATENTS
P.O. Box 1450
Alexandria, Virginia 22313-1450
www.uspto.gov

| APPLICATION NO. | FILING DATE | FIRST NAMED INVENTOR | ATTORNEY DOCKET NO. | CONFIRMATION NO. |
|---|---|---|---|---|
| 13/008,165 | 01/18/2011 | Aaron Keith Chamberlain | 067461-5026-US10 | 8244 |

67374 7590 02/03/2011

MORGAN, LEWIS & BOCKIUS, LLP (SF)
ONE MARKET SPEAR STREET TOWER
SAN FRANCISCO, CA 94105

| EXAMINER | |
|---|---|
| ART UNIT | PAPER NUMBER |
| 1644 | |

| MAIL DATE | DELIVERY MODE |
|---|---|
| 02/03/2011 | PAPER |

**Please find below and/or attached an Office communication concerning this application or proceeding.**

The time period for reply, if any, is set in the attached communication.

UNITED STATES PATENT AND TRADEMARK OFFICE

Commissioner for Patents
United States Patent and Trademark Office
P.O. Box 1450
Alexandria, VA 22313-1450
www.uspto.gov

FEB 0 3 2011

MORGAN, LEWIS & BOCKIUS, LLP (SF)
ONE MARKET SPEAR STREET TOWER
SAN FRANCISCO CA 94105

In re Application of:
Chamberlain et al.

Serial No.: 13/008,165

Filed: January 18, 2011

Docket No.: **067461-5026-US10**

Title: **FC VARIANTS WITH ALTERED BINDING TO FCRN**

DECISION ON REQUEST FOR CONSIDERATION TO MAKE SPECIAL FOR NEW APPLICATION UNDER 37 C.F.R. § 1.102 & M.P.E.P. § 708.02

This is a decision on the request for reconsideration filed on January 18, 2011 to make the above-identified application special for accelerated examination procedure under 37 C.F.R. § 1.102(d).

The petition to make the application special is GRANTED.

The application is eligible for accelerated examination and the petition complies with the conditions for granting the application special status pursuant to the "Change to Practice for Petitions in Patent Applications to Make Special and for Accelerated Examination" published June 26, 2006, in the Federal Register. (71 Fed. Reg. 36323).

The prosecution of the instant application will be conducted expeditiously according to the following guidelines.

1. The application will be docketed to an examiner and taken up for action within two weeks of the date of this decision.

2. Restriction Practice:
   If the examiner determines that the claims are not directed to a single invention, a telephone request to elect one single invention will be made pursuant to MPEP 812.01. As a prerequisite to the grant of this petition, the applicant has agreed to make an oral election, by telephone, without traverse. If the applicant refuses to make an election without traverse, or the examiner cannot reach the applicant after a reasonable effort, the examiner will treat the first claimed invention (invention defined by claim 1) as having being constructively elected without traverse for examination.

3. Office action:
   If it is determined that, after appropriate consultation, there is a potential rejection or any other issue to be addressed, the examiner will telephone the applicant and arrange an interview to discuss and resolve the issue. An Office action, other than a Notice of Allowance and Fee(s) Due (Notice of Allowance), will not be issued unless either: 1) an interview was conducted but did not result in agreed to action that places the application in condition for allowance, or, 2) a determination is made that an interview would be unlikely to result in the application being placed in condition for allowance, and 3) an internal conference has been held to review any rejection of any claim.

4. Time for Reply:
   An Office action other than a Notice of Allowance or a final Office action will set a shortened statutory period of one month or thirty days, whichever is longer, for reply with no extension of time available under 37 CFR 1.136(a). Failure to timely file a reply within this non-extendible period for reply will result in the abandonment of the application.

5. Reply by Applicant:
   A timely reply to an Office action other than the Notice of Allowance must be submitted electronically via EFS or EFS-web and limited to addressing the rejections, objections and requirement made. Any amendment that attempts to: 1) add claims which would result in more than three pending independent claims or more than twenty pending total claims; 2) present claims not encompassed by the pre-examination search or an updated accelerated examination support document; or 3) present claims that are directed a non-elected invention or an invention other than that previously claimed and examined in the application, will be treated as not fully responsive and will not be entered.

   For any amendment to the claims (including any new claim) that is not encompassed by the accelerated examination support document, applicant must provide an updated accelerated examination support document that encompasses the amended or new claims at the time of filing of the amendment.

   To proceed expeditiously with the examination, it is recommended that a reply with amendments made to any claim or with any new claim being added be accompanied by an updated accelerated examination support document or a statement explaining how the amended or new claim is supported by the original accelerated examination support document.

6. Information Disclosure Statement (IDS):
7. Any IDS filed during prosecution must be submitted electronically via EFS or EFS-web, accompanied by an updated accelerated examination support document, and be in compliance with 37 CFR 1.97 and 1.98.

8. Post-Allowance Processing:
   To expedite processing of the allowed application into a patent, the applicant must: 1) pay the required fees within one month of the date of the Notice of Allowance, and 2) not

file any post allowance papers not required by the Office. In no event may the issue fee be paid and accepted later than three months from the date of the Notice of Allowance.

9. After-Final and Appeal Procedures:
   To expedite prosecution, after receiving the final Office action, applicant must: 1) promptly file a notice of appeal, an appeal brief and appeal fees; and 2) not request a pre-appeal brief conference.

   Any amendment, affidavit or other evidence filed after final Office action must comply with applicable rules and the requirements outlined in numbered paragraphs 5 and 6 above.

   On appeal, the application will proceed according to normal appeal procedures. After appeal, the application will again be treated special.

10. Proceedings Outside the Normal Examination Process:
    If the application becomes involved in a proceeding that is outside the normal examination process (e.g., a secrecy order, national security review, interference proceeding, petitions under 37 CFR 1.181, 182 or 183), the application will be treated special before and after such proceeding.

11. Final Disposition:
    The twelve month goal of this accelerated examination procedure ends with a final disposition. The mailing of a final Office action, a Notice of Allowance, the filing of a Notice of Appeal, or the filing of a Request for Continued Examination (RCE) is the final disposition.

If, during prosecution, a paper is not filed electronically using EFS-web, a reply is filed but is not fully responsive, the application is involved in an appeal, or a proceeding outside normal examination process, the application will still be examined expeditiously, however, the final disposition may occur more than twelve months from the filing of the application.

Any inquiry regarding this decision should be directed to Marianne C. Seidel, Quality Assurance Specialist, at (571) 272-0584.

/MC Seidel/
Marianne C. Seidel, Quality Assurance Specialist
Technology Center 1600

**IN THE UNITED STATES PATENT AND TRADEMARK OFFICE**

**First Named Inventor: Joseph Mark BRIAN** )
**Confirmation No.: 8250** )
)
**Serial No.: 13/008,168** )
)
**Filing Date: 01-18-2011** )
)
**Atty Docket No.: 245514-1 (GECZ 201147US01)** )

VIA EFS
Commissioner for Patents
P.O. Box 1450
Alexandria, VA 22313-1450

**Statement Concerning the Basis for the Special Status**

SIR:

This application relates to energy management, and more particularly to energy systems and methods with time of use (TOU) and/or demand response (DR) energy programs. The present application can be used within utility systems and appliances configured to manage energy loads to consumers through a communicating consumer control device, such as a home energy manager (HEM), programmable communicating thermostat (PCT), appliance controller, or the like. (See [0001])

More specifically, this application provides an energy management system that can communicate to any device among multiple types of home networks at a home. The system has a home energy gateway that obtains power/energy data, demand response data, or other like data available at an energy services interface (ESI) and then makes the data available to the appliances on the network. The ESI, for example, passes price information, price tier information,

messages, and load control commands from the utility to the energy gateway and ultimately to devices at the home, such as the appliances. A primary network (e.g., a Zigbee, Wifi, Ethernet, PLC network or the like) includes a smart meter in communication with a utility, for example, and the home energy gateway. The power/energy data is available on the primary network from the smart meter, which measures power/energy consumption or other like functions for the home. The ESI data (e.g., price tier, price, messages, load control events, and the like) is repeated to one or more secondary networks having devices bound on the secondary networks respectively. (See [0005])

Applicant respectfully submits that Special Status is sought on the basis that the present invention materially contributes to the more efficient utilization and conservation of energy resources.

The undersigned representative may be contacted at the number below to facilitate the resolution of any matters. Please charge any fees that are incurred in connection with this Statement to deposit account no. 09-0470.

Respectfully submitted,

General Electric Company

By : /Allison W. Mages/
Allison W. Mages
Reg. No. 57,275

Dated: October 13, 2011

GE Global Patent Operation
2 Corporate Drive, Suite 648
Shelton, CT 06484
203-944-6730

Doc Code: PET.GREEN
Document Description: Petition for Green Tech Pilot

PTO/SB/420 (03-11)

# PETITION TO MAKE SPECIAL UNDER THE GREEN TECHNOLOGY PILOT PROGRAM

| Attorney Docket Number: 245514-1 (GECZ 201147US01) | Application Number (if known): 13/008,168 | Filing date: 01-18-2011 |
|---|---|---|

First Named Inventor: Joseph Mark BRIAN

Title: HEG-SINGLE PRIMARY NETWORK TO MULITPLE SECONDARY NETWORK ENERGY MANAGEMENT

**APPLICANT HEREBY REQUESTS TO PARTICIPATE IN THE GREEN TECHNOLOGY PILOT PROGRAM FOR THE ABOVE-IDENTIFIED APPLICATION. See Instruction Sheet on page 2.**

This petition must be timely filed electronically using the USPTO electronic filing system, EFS-Web.

1. By filing this petition:

   **Applicant is requesting early publication: Applicant hereby requests early publication under 37 CFR 1.219 and the publication fee set forth in 37 CFR 1.18(d) accompanies this request.**

2. By filing this petition: applicant is agreeing to make an election without traverse in a telephonic interview and elect an invention that meets the eligibility requirements for the Green Technology Pilot Program, if the Office determines that the claims are not obviously directed to a single invention. See Instruction Sheet.

3. This request is accompanied by statements of special status for the eligibility requirement.

4. The application contains no more than three (3) independent claims and twenty (20) total claims.

5. The application does not contain any multiple dependent claims.

6. Other attachments: Statement Concerning the Basis for the Special Status

| Signature /Allison W. Mages/ | Date October 13, 2011 |
|---|---|
| Name (Print/Typed) Allison W. Mages | Registration Number 57,275 |

*Note: Signatures of all the inventors or assignees of record of the entire interest or their representative(s) are required in accordance with 37 CFR 1.33 and 11.18. Please see 37 CFR 1.4(d) for the form of the signature. If necessary, submit multiple forms for more than one signature, see below*.*

☐ *Total of _____ forms are submitted.

*If you need assistance in completing the form, call 1-800-PTO-9199 and select option 2.*

UNITED STATES PATENT AND TRADEMARK OFFICE

UNITED STATES DEPARTMENT OF COMMERCE
United States Patent and Trademark Office
Address: COMMISSIONER FOR PATENTS
P.O. Box 1450
Alexandria, Virginia 22313-1450
www.uspto.gov

| APPLICATION NO. | FILING DATE | FIRST NAMED INVENTOR | ATTORNEY DOCKET NO. | CONFIRMATION NO. |
|---|---|---|---|---|
| 13/008,168 | 01/18/2011 | Joseph Mark Brian | 245514-1 (GECZ 201147US01 | 8250 |

27885 7590 10/27/2011

FAY SHARPE LLP
1228 Euclid Avenue, 5th Floor
The Halle Building
Cleveland, OH 44115

| EXAMINER | |
|---|---|
| DECADY, ALBERT | |
| **ART UNIT** | **PAPER NUMBER** |
| 2121 | |

| MAIL DATE | DELIVERY MODE |
|---|---|
| 10/27/2011 | PAPER |

**Please find below and/or attached an Office communication concerning this application or proceeding.**

The time period for reply, if any, is set in the attached communication.

UNITED STATES PATENT AND TRADEMARK OFFICE

Commissioner for Patents
United States Patent and Trademark Office
P.O. Box 1450
Alexandria, VA 22313-1450
www.uspto.gov

FAY SHARPE LLP
1228 Euclid Avenue, 5th Floor
The Halle Building
Cleveland OH 44115

In re Application of
BRIAN, Joseph et al.
Application No. 13/008,168
Filed: January 18, 2011
For: **HEG - SINGLE PRIMARY NETWORK TO MULTIPLE SECONDARY NETWORK ENERGY MANAGEMENT**

**DECISION ON PETITION TO MAKE SPECIAL UNDER THE GREEN TECHNOLOGY PILOT PROGRAM**

The petition filed October 13, 2011 has been treated as a petition under 37 CFR 1.102 to make the above-identified application special under the pilot program for applications pertaining to Green Technologies as set forth in 74 Federal Register Notice 64666 (December 8, 2009) and amended by 75 Federal Register Notice 28554 (May 21, 2010).

The petition is **DISMISSED**.

If reconsideration of this decision is desired, a petition for reconsideration must be filed within ONE (1) MONTH OR THIRTY (30) DAYS from the mail date of this decision, whichever is longer. No extension of this time limit can be granted under 37 CFR 1.136(a) or (b). The petition for reconsideration should include an exhaustive attempt to provide the lacking item(s) noted below, since, after a decision on the petition for reconsideration, no further reconsideration or review of the matter will be undertaken by the Director.

A grantable petition to make an application special under 37 CFR 1.102 and the pilot program as set forth in 74 FR 64666 must be directed to a nonprovisional application filed under 35 USC 111(a) or be a national stage entry under 35 USC 371, exclusive of any reissue applications and be filed prior to the date of the notice, December 8, 2009.

In order to qualify for special status, the following requirements must be met. 1) The application must have no more than 3 independent claims and no more than 20 total claims. 2) The application must not contain any multiple dependent claims. 3) The petition must state the basis for seeking special status, i.e., the claimed invention either: A) materially enhances the quality of the environment or B) materially contributes to: i) the discovery or development of renewable energy resources, ii) the more efficient utilization and conservation of energy resources, or iii) greenhouse gas emission reduction. 4) If the disclosure is not clear on its face that the claimed

invention materially contributes under category (A) or (B), the petition must be accompanied by a statement by the applicant, assignee, or an attorney/agent registered to practice before the Office explaining how the materiality standard is met. 5) A statement that applicant will agree to make an election without traverse in a telephonic interview if a restriction requirement is made by the examiner. 6) The petition to make special must be filed electronically. 7) The petition must be filed at least one day prior to the date that a first Office Action appears in the Patent Application Information Retrieval (PAIR) system. 8) The petition must be accompanied by a request for early publication in compliance with 37 CFR 1.219 and include the publication fee as set forth in 37 CFR 1.18(d).

The requirement for a fee for consideration of the petition to make special for applications pertaining to Green Technologies has been waived.

The petition lacks item(s) 4 above for the reasons explained in more detail below.

In the "Statement Concerning the Basis for the Special Status," petitioner states that "the application relates to energy management, and more particularly to energy systems and methods with time of use (TOU) and/or demand response (DR) energy programs. The present application can be used within utility systems and appliances configured to manage energy loads to consumers through a communicating consumer control device, such as a home energy manager (HEM), programmable communicating thermostat (PCT), appliance controller, or the like. (See [0001])." Then, the "Statement" goes on to recite various language from the claims. However, these general statements fail to "explain[ ] how the materiality standard is met." Since the "disclosure is not clear on its face that the claimed invention contributes under category (A) or (B)," applicant is required to provide a more detail "[explanation] of how the materiality standard is met." This is because the claimed invention merely recites being able to "monitor and manage energy consumption of each of the managed devices by sending communications to each of the managed devices." Nothing in the claims relate to the utilization of renewable energy resources, reduce greenhouse gas emission or contribute to more efficient utilization and conservation of energy resources. Furthermore, any request for reconsideration will be reviewed pursuant to Section II of the Pilot Program for Green Technologies as set forth in 74 Federal Register Notice 64666, which specifies that "materiality standard does not permit an applicant to speculate as to how a hypothetical end-user might specially apply the invention in a manner that could materially enhance the quality of the environment. Nor dies such standard permit an applicant to enjoy the benefit of advanced examination merely because some minor aspect of the claimed invention may enhance the quality of the environment."

Any reconsideration of this decision should be submitted through the USPTO electronic filing system, EFS-Web, and selecting the document description of "Petition for Green Tech Pilot" on the EFS-Web screen.

Any inquiry regarding this decision should be directed to Eddie C. Lee at (571) 272 - 1732.

/Eddie C. Lee/

Eddie C. Lee
Quality Assurance Specialist, TC 2100

**IN THE UNITED STATES PATENT AND TRADEMARK OFFICE**

| | |
|---|---|
| **First Named Inventor: Joseph Mark BRIAN** | ) |
| **Confirmation No.: 8250** | ) |
| | ) |
| **Serial No.: 13/008,168** | ) |
| | ) |
| **Filing Date: 01-18-2011** | ) |
| | ) |
| **Atty Docket No.: 245514-1 (GECZ 201147US01)** | ) |

Commissioner for Patents
P.O. Box 1450
Alexandria, VA 22313-1450

**Request for Reconsideration**

SIR:

This is responsive to the Decision on Petition, dated as mailed 27 October 2011, in the above-referenced application.

Applicant respectfully requests reconsideration of Applicant's Petition to Make Special on the basis that the present invention materially contributes to the more efficient utilization and conservation of energy resources.

The Decision to Make Special Under the Green Technology Pilot Program (hereinafter "the Decision") alleges that the claimed invention merely recites being able to monitor and manage energy consumption of each of the managed devices by sending communications to each of the managed devices. The Decision further alleges that nothing in the claims relate to the utilization or renewable energy resources, reduce greenhouse gas emission or contribute to more efficient utilization and conservation of energy resources. The Decision also implies that Applicant speculates as to how a hypothetical end-user might specially apply the invention in a manner that could materially enhance the

quality of the environment. Applicant does not agree with the comments made in the Decision.

Applicant respectfully submits that embodiments of the present invention relate to energy management, and more particularly to energy systems and methods with time of use (TOU) and/or demand response (DR) energy programs. The disclosure finds particular application to utility systems and appliances configured to manage energy loads to consumers through a communicating consumer control device, such as a home energy manager (HEM), programmable communicating thermostat (PCT), appliance controller, or the like. (see at least paragraph [0001]).

Smart technology generally relates to a class of technology that uses computer-based remote control and automation. These systems are made possible by two-way communication technology and computer processing and offer many benefits to utilities and consumers; mostly seen in big improvements in energy efficiency. Amongst several benefits, smart energy technologies allow for greater informational awareness and control of energy flow. This informational awareness allows consumers to interface with their energy consumption, providing new levels of detail on how, and how much, electricity is being consumed and at what cost in real time, and give them the tools to increase or decrease their consumption. It also allows utilities to more efficiently manage and adjust electricity transmission, reducing the likelihood of outages and congestion while improving billing accuracy for consumers. Smart energy generally provides consumers and utilities a greater ability to adapt to changing market conditions

for greater energy efficiency. ("Smart Grid", Office of Electricity Delivery & Energy Reliability. 2011. Web. 28 July 2011.)

Demand response (DR) appliances are configured to respond to incoming signals from utilities (e.g., for a load shedding event), and/or user inputs for modifying the operation of the appliance (e.g., for energy savings). Coupled with DR appliances, a home energy manager (HEM) or home energy gateway (HEG) of a home network provides feedback to a user regarding the performance of the appliances. For example, a user may be able to monitor and/or modify the appliances' responses as well as get feedback on power consumption. In order to reduce high peak power demand, many utilities have instituted time of use (TOU) metering and rates, which include higher rates for energy usage during on-peak times and lower rates for energy usage during off-peak times. As a result, consumers are provided with an incentive to use electricity at off-peak times rather than on-peak times and to reduce overall energy consumption of appliances at all times. (see at least paragraph [0002]).

There is a need to provide a system that can automatically operate power consuming devices during off-peak hours in order to reduce consumer's electric bills and also to reduce the load on generating plants during on-peak hours. Active and real time communication of energy costs and consumption of appliances to the consumer will enable informed choices of operating the power consuming functions of the appliance. Further, to better communicate between appliances of a home and inform the user about energy costs and usage there is a need to communicate to all inputs of devices within the home regarding TOU

and DR schedules or other information to the user. (see at least paragraphs [0003]-[0004]).

The present disclosure enables a controller of a home, such as a home energy gateway (HEG) or the like to communicate with multiple communication interfaces, and use those interfaces to expand system network topologies for dissemination for smart grid messaging. More specifically, this disclosure provides an energy management system that can communicate to any device among multiple types of home networks at a home. The system has a home energy gateway that obtains power/energy data, demand response data, or other like data available at an energy services interface (ESI) and then makes the data available to the appliances on the network. The ESI, for example, passes price information, price tier information, messages, and load control commands from the utility to the energy gateway and ultimately to devices at the home, such as the appliances. A primary network (e.g., a Zigbee, Wifi, Ethernet, PLC network or the like) includes a smart meter in communication with a utility, for example, and the home energy gateway. The power/energy data is available on the primary network from the smart meter, which measures power/energy consumption or other like functions for the home. The ESI data (e.g., price tier, price, messages, load control events, and the like) is repeated to one or more secondary networks having devices bound on the secondary networks respectively. (see at least paragraphs [0005] and [0010]).

The embodiments disclosed herein provide for more efficient control of the operation of accessories in a home energy management system which manages

a plurality of communication networks. Amongst several benefits, embodiments of the present invention allow for greater informational awareness and control of energy flow, which has been shown to encourage reductions in energy consumption, and results in greater energy efficiency on the part of consumers and utilities. As such, the present invention promotes the more efficient utilization of and conservation of energy.

The undersigned attorney may be contacted at the number below to facilitate the resolution of any matters. Please charge any fees that are incurred in connection with this Statement to deposit account no. 09-0470.

Respectfully submitted,

General Electric Company

By : /Allison W Mages/
Allison Weiner Mages
Reg. No. 57,275

Dated: November 28, 2011

GE Global Patent Operation
2 Corporate Drive, Suite 648
Shelton, CT 06484
203-944-6730

UNITED STATES PATENT AND TRADEMARK OFFICE

UNITED STATES DEPARTMENT OF COMMERCE
United States Patent and Trademark Office
Address: COMMISSIONER FOR PATENTS
P.O. Box 1450
Alexandria, Virginia 22313-1450
www.uspto.gov

| APPLICATION NO. | FILING DATE | FIRST NAMED INVENTOR | ATTORNEY DOCKET NO. | CONFIRMATION NO. |
|---|---|---|---|---|
| 13/008,168 | 01/18/2011 | Joseph Mark Brian | 245514-1 (GECZ 201147US01 | 8250 |

27885 7590 12/12/2011

FAY SHARPE LLP
1228 Euclid Avenue, 5th Floor
The Halle Building
Cleveland, OH 44115

| EXAMINER | |
|---|---|
| DECADY, ALBERT | |

| ART UNIT | PAPER NUMBER |
|---|---|
| 2121 | |

| MAIL DATE | DELIVERY MODE |
|---|---|
| 12/12/2011 | PAPER |

**Please find below and/or attached an Office communication concerning this application or proceeding.**

The time period for reply, if any, is set in the attached communication.

UNITED STATES PATENT AND TRADEMARK OFFICE

Commissioner for Patents
United States Patent and Trademark Office
P.O. Box 1450
Alexandria, VA 22313-1450
www.uspto.gov

12/12/11

FAY SHARPE LLP
1228 Euclid Avenue, 5th Floor
The Halle Building
Cleveland OH 44115

In re Application of :
Joseph M. Brian et al. : DECISION ON PETITION
Application No. 13/008,168 : TO MAKE SPECIAL UNDER
Filed: January 18, 2011 : THE GREEN TECHNOLOGY
Attorney Docket No. 245514-1 (GECZ 201147US01 : PILOT PROGRAM

This is a decision on the petition under 37 CFR 1.102, filed November 28, 2011, to make the above-identified application special under the pilot program for applications pertaining to Green Technologies as set forth in 74 Federal Register Notice 64666 (December 8, 2009) and amended by 75 Federal Register Notice 28554 (May 21, 2010) and 75 Federal Register Notice 69049 (November 10, 2010).

The petition is **GRANTED**.

A grantable petition to make an application special under 37 CFR 1.102 and the pilot program as set forth in 74 FR 64666 must be directed to a nonprovisional application filed under 35 USC 111(a) or be a national stage entry under 35 USC 371, exclusive of any reissue applications.

In order to qualify for special status, the following requirements must be met. 1) The application must have no more than 3 independent claims and no more than 20 total claims. 2) The application must not contain any multiple dependent claims. 3) The petition must state the basis for seeking special status, i.e., the claimed invention either: A) materially enhances the quality of the environment or B) materially contributes to: i) the discovery or development of renewable energy resources, ii) the more efficient utilization and conservation of energy resources, or iii) greenhouse gas emission reduction. 4) If the disclosure is not clear on its face that the claimed invention materially contributes under category (A) or (B), the petition must be accompanied by a statement by the applicant, assignee, or an attorney/agent registered to practice before the Office explaining how the materiality standard is met. 5) A statement that applicant will agree to make an election without traverse in a telephonic interview if a restriction requirement is made by the examiner. 6) The petition to make special must be filed electronically. 7) The petition must be filed at least one day prior to the date that a first Office Action appears in the Patent Application Information Retrieval (PAIR) system. 8) The petition must be accompanied by a request for early publication in compliance with 37 CFR 1.219 and include the publication fee as set forth in 37 CFR 1.18(d).

The requirement for a fee for consideration of the petition to make special for applications pertaining to Green Technologies has been waived.

The instant petition complies with items 1 – 8 above. Accordingly, the above-identified application has been accorded "special" status.

Telephone inquires concerning this decision should be directed to Blaine Copenheaver at 571-272-1156.

The application is being forwarded to the examiner for action on the merits commensurate with this decision.

/Blaine Copenheaver/

Blaine Copenheaver
Quality Assurance Specialist
Technology Center 1700

UNITED STATES PATENT AND TRADEMARK OFFICE

Commissioner for Patents
United States Patent and Trademark Office
P.O. Box 1450
Alexandria, VA 22313-1450
www.uspto.gov
DTW May-11

MAILED

MAY 17 2011

OFFICE OF PETITIONS

TAYLOR IP, P.C.
P.O. BOX 560
142. S MAIN STREET
AVILLA IN 46710

In re Application of :
Crasser et al. : DECISION ACCORDING STATUS
Application Number: 13/008,176 : UNDER 37 CFR 1.47(a)
Filing Date: 01/18/2011 :
Attorney Docket Number: :
VOI0636.US :

This is in response to the petition filed under 37 CFR 1.47(a) on April 4, 2011.

The petition is **GRANTED**.

Petitioners have shown that a copy of the application was sent to the last known address of the non-signing inventor, Michael Kramer. The inventor failed, however, to sign and return the declaration.

As such, the showing of record is that the non-signing inventor has constructively refused to join in the filing of the application.

The above-identified application and papers have been reviewed and found in compliance with 37 CFR 1.47(a). This application is hereby accorded Rule 1.47(a) status.

The Office is construing the address contained in the Declaration as the last known address for the non-signing inventor. Petitioners must inform the Office if this is an incorrect interpretation.

As provided in Rule 1.47(c), this Office will forward notice of this application's filing to the non-signing inventor at the

address listed in the Declaration. Notice of the filing of this application will also be published in the *Official Gazette*.

The application is being referred to the Office of Patent Application Processing for further processing.

Telephone inquiries related to this decision should be directed to the undersigned at 571-272-3231.

Douglas I. Wood
Senior Petitions Attorney
Office of Petitions

UNITED STATES PATENT AND TRADEMARK OFFICE

Commissioner for Patents
United States Patent and Trademark Office
P.O. Box 1450
Alexandria, VA 22313-1450
www.uspto.gov
DIW May-11

MAILED

MAY 17 2011

OFFICE OF PETITIONS

MICHAEL KRAMER
PLÜDENMANNGASSE 75A
A-8010, GRAZ
AUSTRIA

In re Application of
Crasser et al.
Application No. 13/008,176
Filed: 01/18/2011
For: METHOD FOR REFINING CELLULOSE FIBERS IN AQUEOUS SUSPENSION AS WELL AS REFINER FILLING TO IMPLEMENT SAID METHOD

Dear Mr. Kramer:

You are named as a joint inventor in the above identified United States patent application, filed under the provisions of 35 U.S.C. 116 (United States Code), and 37 CFR 1.47(a), Rules of Practice in Patent Cases. Should a patent be granted on the application you will be designated therein as a joint inventor.

As a named inventor you are entitled to inspect any paper in the file wrapper of the application, order copies of all or any part thereof (at a prepaid cost per 37 CFR 1.19) or make your position of record in the application. Alternatively, you may arrange to do any of the preceding through a registered patent attorney or agent presenting written authorization from you. If you care to join the application, counsel of record (see below) would presumably assist you. Joining in the application would entail the filing of an appropriate oath or declaration by you pursuant to 37 CFR 1.63.

Telephone inquiries regarding this communication should be directed to the undersigned at 571/272-3231. Requests for information regarding your application should be directed to the File Information Unit at 571-272-3150. Information regarding how to pay for and order a copy of the application, or a specific paper in the application, should be directed to Certification Division at 571-272-3150 or 1-800-972-6382 (outside the Washington D.C. area).

Douglas I. Wood
Senior Petitions Attorney
Office of Petitions

TAYLOR IP, P.C.
P.O. BOX 560
142. S MAIN STREET
AVILLA IN 46710

**Doc Code: PET.GREEN**
**Document Description: Petition for Green Tech Pilot**

PTO/SB/420 (05-10)
Approved for use through 05/31/2010. OMB 0651-0062
U.S. Patent and Trademark Office; U. S. DEPARTMENT OF COMMERCE
Under the Paperwork Reduction Act of 1995, no persons are required to respond to a collection of information unless it displays a valid OMB control number.

# PETITION TO MAKE SPECIAL UNDER THE GREEN TECHNOLOGY PILOT PROGRAM

| Attorney Docket Number: VWS-101CO | Application Number (if known): 13/008,202 | Filing date: 01-18-2011 |
|---|---|---|

First Named Inventor: Bing Li et al.

Title: METHOD FOR DETERMINING A ROTOR POSITION OF AN ELECTRICAL GENERATOR IN A WIND TURBINE

**APPLICANT HEREBY REQUESTS TO PARTICIPATE IN THE GREEN TECHNOLOGY PILOT PROGRAM FOR THE ABOVE-IDENTIFIED APPLICATION.** **See Instruction Sheet on page 2.**

This petition must be timely filed electronically using the USPTO electronic filing system, EFS-Web.

1. By filing this petition:

   **Applicant is requesting early publication: Applicant hereby requests early publication under 37 CFR 1.219 and the publication fee set forth in 37 CFR 1.18(d) accompanies this request.**

2. By filing this petition: applicant is agreeing to make an election without traverse in a telephonic interview and elect an invention that meets the eligibility requirements set forth in the notice titled "Pilot Program for Green Technologies Including Greenhouse Gas Reduction," as modified by the notice titled "Elimination of Classification Requirement in the Green Technology Pilot Program," each of which was published in the Federal Register, if the Office determines that the claims are not obviously directed to a single invention.

3. This request is accompanied by statements of special status for the eligibility requirement.

4. The application contains no more than three (3) independent claims and twenty (20) total claims.

5. The application does not contain any multiple dependent claims.

6. Other attachments: _____

| Signature /William R. Allen/ | Date 02-08-11 |
|---|---|
| Name (Print/Typed) William R. Allen | Registration Number 48389 |

***Note:*** *Signatures of all the inventors or assignees of record of the entire interest or their representative(s) are required in accordance with 37 CFR 1.33 and 11.18. Please see 37 CFR 1.4(d) for the form of the signature. If necessary, submit multiple forms for more than one signature, see below*.*

☑ *Total of 1 forms are submitted.

The information is required to obtain or retain a benefit by the public which is to file (and by the USPTO to process) an application. Confidentiality is governed by 35 U.S.C. 122 and 37 CFR 1.11 and 1.14. This collection is estimated to take 12 hours to complete, including gathering, preparing, and submitting the completed application form to the USPTO. Time will vary depending upon the individual case. Any comments on the amount of time you require to complete this form and/or suggestions for reducing this burden, should be sent to the Chief Information Officer, U.S. Patent and Trademark Office, U.S. Department of Commerce, P.O. Box 1450, Alexandria, VA 22313-1450. DO NOT SEND FEES OR COMPLETED FORMS TO THIS ADDRESS. **SEND TO: Commissioner for Patents, P.O. Box 1450, Alexandria, VA 22313-1450.**

*If you need assistance in completing the form, call 1-800-PTO-9199 and select option 2.*

PTO/SB/420 (05-10)
Approved for use through 05/31/2010. OMB 0651-0062
U.S. Patent and Trademark Office; U. S. DEPARTMENT OF COMMERCE
Under the Paperwork Reduction Act of 1995, no persons are required to respond to a collection of information unless it displays a valid OMB control number.

# Instruction Sheet for
# Petition to Make Special Under the Green Technology Pilot Program

(Not to be Submitted to the USPTO)

***The following is a summary of the requirements** (for more information see the notices (i) "Pilot Program for Green Technologies Including Greenhouse Gas Reduction" and (ii) "Elimination of Classification Requirement in the Green Technology Pilot Program," available on the USPTO web site at http://www.uspto.gov/patents/init_events/green_tech.jsp):*

(1) The application must be a non-reissue, non-provisional utility application filed under 35 U.S.C. 111(a), or an international application that has entered the national stage in compliance with 35 U.S.C. 371. The application must be previously filed before the publication date of the notice cited above. Reexamination proceedings are excluded from this pilot program.

(2) The application must contain three or fewer independent claims and twenty or fewer total claims. The application must not contain any multiple dependent claims. For an application that contains more than three independent claims or twenty total claims, or multiple dependent claims, applicant must file a preliminary amendment in compliance with 37 CFR 1.121 to cancel the excess claims and/or the multiple dependent claims at the time the petition to make special is filed.

(3) The claims must be directed to a single invention that materially enhances the quality of the environment, or that materially contributes to: (1) the discovery or development of renewable energy resources; (2) the more efficient utilization and conservation of energy resources; or (3) green house gas emission reduction (see the eligibility requirements of sections II and III of the notice (i) cited above). The petition must include a statement that, if the USPTO determines that the claims are directed to multiple inventions (e.g., in a restriction requirement), applicant will agree to make an election without traverse in a telephonic interview, and elect an invention that meets the eligibility requirements in section II or III of the notice (i) cited above.

(4) The petition to make special must be timely filed electronically using the USPTO electronic filing system, EFS-Web, and selecting the document description of "Petition for Green Tech Pilot" on the EFS-Web screen. Applicant should use form PTO/SB/420, which is available as a Portable Document Format (PDF) fillable form in EFS-Web and on the USPTO Web site.

(5) The petition to make special must be filed at least one day prior to the date that a first Office action (which may be an Office action containing only a restriction requirement) appears in the Patent Application Information Retrieval (PAIR) system. Applicant may check the status of the application using PAIR.

(6) The petition to make special must be accompanied by a request for early publication in compliance with 37 CFR 1.219 and the publication fee set forth in 37 CFR 1.18(d).

# Privacy Act Statement

The **Privacy Act of 1974 (P.L. 93-579)** requires that you be given certain information in connection with your submission of the attached form related to a patent application or patent. Accordingly, pursuant to the requirements of the Act, please be advised that: (1) the general authority for the collection of this information is 35 U.S.C. 2(b)(2); (2) furnishing of the information solicited is voluntary; and (3) the principal purpose for which the information is used by the U.S. Patent and Trademark Office is to process and/or examine your submission related to a patent application or patent. If you do not furnish the requested information, the U.S. Patent and Trademark Office may not be able to process and/or examine your submission, which may result in termination of proceedings or abandonment of the application or expiration of the patent.

The information provided by you in this form will be subject to the following routine uses:

1. The information on this form will be treated confidentially to the extent allowed under the Freedom of Information Act (5 U.S.C. 552) and the Privacy Act (5 U.S.C 552a). Records from this system of records may be disclosed to the Department of Justice to determine whether disclosure of these records is required by the Freedom of Information Act.
2. A record from this system of records may be disclosed, as a routine use, in the course of presenting evidence to a court, magistrate, or administrative tribunal, including disclosures to opposing counsel in the course of settlement negotiations.
3. A record in this system of records may be disclosed, as a routine use, to a Member of Congress submitting a request involving an individual, to whom the record pertains, when the individual has requested assistance from the Member with respect to the subject matter of the record.
4. A record in this system of records may be disclosed, as a routine use, to a contractor of the Agency having need for the information in order to perform a contract. Recipients of information shall be required to comply with the requirements of the Privacy Act of 1974, as amended, pursuant to 5 U.S.C. 552a(m).
5. A record related to an International Application filed under the Patent Cooperation Treaty in this system of records may be disclosed, as a routine use, to the International Bureau of the World Intellectual Property Organization, pursuant to the Patent Cooperation Treaty.
6. A record in this system of records may be disclosed, as a routine use, to another federal agency for purposes of National Security review (35 U.S.C. 181) and for review pursuant to the Atomic Energy Act (42 U.S.C. 218(c)).
7. A record from this system of records may be disclosed, as a routine use, to the Administrator, General Services, or his/her designee, during an inspection of records conducted by GSA as part of that agency's responsibility to recommend improvements in records management practices and programs, under authority of 44 U.S.C. 2904 and 2906. Such disclosure shall be made in accordance with the GSA regulations governing inspection of records for this purpose, and any other relevant (*i.e.*, GSA or Commerce) directive. Such disclosure shall not be used to make determinations about individuals.
8. A record from this system of records may be disclosed, as a routine use, to the public after either publication of the application pursuant to 35 U.S.C. 122(b) or issuance of a patent pursuant to 35 U.S.C. 151. Further, a record may be disclosed, subject to the limitations of 37 CFR 1.14, as a routine use, to the public if the record was filed in an application which became abandoned or in which the proceedings were terminated and which application is referenced by either a published application, an application open to public inspection or an issued patent.
9. A record from this system of records may be disclosed, as a routine use, to a Federal, State, or local law enforcement agency, if the USPTO becomes aware of a violation or potential violation of law or regulation.

**Certificate of Electronic Transmission**

I hereby certify that this correspondence is being electronically transmitted to the U.S. Patent and Trademark Office via EFS-WEB on February 8, 2011.

/William R. Allen/ — February 8, 2011

William R. Allen, Ph.D. Reg. No, 48,389 — Date

**IN THE UNITED STATES PATENT AND TRADEMARK OFFICE**

| | |
|---|---|
| Applicants: | Bing Li, et al. |
| Serial No.: | 13/008,202 |
| Filed: | January 18, 2011 |
| Group Art Unit: | 2839 |
| Examiner: | Unknown |
| Confirmation No.: | 8317 |
| Title: | METHOD FOR DETERMINING A ROTOR POSITION OF AN ELECTRICAL GENERATOR IN A WIND TURBINE |
| Attorney Docket: | VWS-101CO |

Cincinnati, Ohio 45202 — February 8, 2011

Commissioner for Patents
P.O. Box 1450
Alexandria, VA 22313-1450

**STATEMENT OF SPECIAL STATUS FOR ELIGIBILITY UNDER THE GREEN TECHNOLOGY PILOT PROGRAM**

Sir:

Applicant hereby submits a statement to support Applicant's petition for the Green Technology Pilot Program, which is filed on even date herewith. The Applicant seeks special status because the invention disclosed and claimed in the present application materially enhances the quality of the environment by contributing to the restoration or maintenance of the basic life-sustaining natural elements. The materiality standard is satisfied because the claimed invention materially enhances the quality of the environment by contributing to the restoration or maintenance of one of the basic life-sustaining natural elements and/or the claimed invention

materially contributes to development of renewable energy or energy conservation and greenhouse gas emission reduction. Specifically, the claimed invention relates to wind turbines that operate using a renewable natural resource (wind) rather than fossil fuels and, more specifically, to methods for determining a rotor position of a synchronous electrical generator in a wind turbine. Wind turbine operation without the consumption of fossil fuels enhances the quality of the environment, contributes to the development of renewable energy, and reduces greenhouse gas emission.

Early and favorable consideration of Applicant's petition and this claims contained in this application are respectfully requested.

Applicant does not believe any fees are due in connection with filing this communication other than the publication fee. If, however, any fees are necessary as a result of this communication, the Commissioner is hereby authorized to charge any under-payment or fees associated with this communication or credit any over-payment to Deposit Account No. 23-3000.

Respectfully submitted,

WOOD, HERRON & EVANS, L.L.P.

/William R. Allen/
William R. Allen, Ph.D.
Reg. No, 48,389

2700 Carew Tower
441 Vine Street
Cincinnati, OH 45202
(513) 241-2324 (voice)
(513) 421-7269 (facsimile)
wallen@whepatent.com

UNITED STATES PATENT AND TRADEMARK OFFICE

UNITED STATES DEPARTMENT OF COMMERCE
United States Patent and Trademark Office
Address: COMMISSIONER FOR PATENTS
P.O. Box 1450
Alexandria, Virginia 22313-1450
www.uspto.gov

| APPLICATION NO. | FILING DATE | FIRST NAMED INVENTOR | ATTORNEY DOCKET NO. | CONFIRMATION NO. |
|---|---|---|---|---|
| 13/008,202 | 01/18/2011 | Bing Li | VWS-101CO | 8317 |

26875 7590 02/23/2011

WOOD, HERRON & EVANS, LLP
2700 CAREW TOWER
441 VINE STREET
CINCINNATI, OH 45202

| EXAMINER | |
|---|---|
| ART UNIT | PAPER NUMBER |
| 2839 | |

| MAIL DATE | DELIVERY MODE |
|---|---|
| 02/23/2011 | PAPER |

**Please find below and/or attached an Office communication concerning this application or proceeding.**

The time period for reply, if any, is set in the attached communication.

UNITED STATES PATENT AND TRADEMARK OFFICE

Commissioner for Patents
United States Patent and Trademark Office
P.O. Box 1450
Alexandria, VA 22313-1450
www.uspto.gov

WOOD, HERRON & EVANS, LLP
2700 CAREW TOWER
441 VINE STREET
CINCINNATI OH 45202

| | | |
|---|---|---|
| In re Application of | : | |
| LI et al. | : | DECISION ON PETITION |
| Application No. 13/008,202 | : | TO MAKE SPECIAL UNDER |
| Filed: January 18, 2011 | : | THE GREEN TECHNOLOGY |
| Attorney Docket No. VWS-101CO | : | PILOT PROGRAM |

This is a decision on the petition under 37 CFR 1.102, filed on February 08, 2011, to make the above-identified application special under the pilot program for applications pertaining to Green Technologies as set forth 74 Federal Register Notice 64666 (December 8, 2009) and amended by 75 Federal Register Notice 28554 (May 21, 2010) and 75 Federal Register Notice 69049 (November 10, 2010).

The petition is **DISMISSED**.

If reconsideration of this decision is desired, a petition for reconsideration must be filed within ONE (1) MONTH OR THIRTY (30) DAYS from the mail date of this decision, whichever is longer. No extension of this time limit can be granted under 37 CFR 1.136(a) or (b). The petition for reconsideration should include an exhaustive attempt to provide the lacking item(s) noted below, since, after a decision on the petition for reconsideration, no further reconsideration or review of the matter will be undertaken by the Director.

A grantable petition to make an application special under 37 CFR 1.102 and the pilot program as set forth in 74 FR 64666 must be directed to a nonprovisional application filed under 35 USC 111(a) or be a national stage entry under 35 USC 371, exclusive of any reissue applications and be filed prior to the date of the notice, December 8, 2009.

In order to qualify for special status, the following requirements must be met. 1) The application must have no more than 3 independent claims and no more than 20 total claims. 2) The application must not contain any multiple dependent claims. 3) The petition must state the basis for seeking special status, i.e., the claimed invention either: A) materially enhances the quality of the environment or B) materially contributes to: i) the discovery or development of renewable energy resources, ii) the more efficient utilization and conservation of energy resources, or iii) greenhouse gas emission reduction. 4) If the disclosure is not clear on its face that the claimed invention materially contributes under category (A) or (B), the petition must be accompanied by a statement by the applicant, assignee, or an attorney/agent registered to practice before the

Office explaining how the materiality standard is met. 5) A statement that applicant will agree to make an election without traverse in a telephonic interview if a restriction requirement is made by the examiner. 6) The petition to make special must be filed electronically. 7) The petition must be filed at least one day prior to the date that a first Office Action appears in the Patent Application Information Retrieval (PAIR) system. 8) The petition must be accompanied by a request for early publication in compliance with 37 CFR 1.219 and include the publication fee as set forth in 37 CFR 1.18(d).

The requirement for a fee for consideration of the petition to make special for applications pertaining to Green Technologies has been waived.

The petition lacks item 4.

In regard to item 4, applicant's statement pertaining to how the materiality standard is met does not satisfy the requirements for this pilot. The materiality standard does not permit an applicant to speculate as to how a hypothetical end-user might specially apply the invention in a manner that relates to a green technology. The recitation of the wind turbine in the claims is considered intended use. Any argument that the claimed invention can be used with wind turbines is considered speculate as to how a hypothetical end-user might specially apply the claimed invention.

Any reconsideration of this decision should be submitted through the USPTO electronic filing system, EFS-Web, and selecting the document description of "Petition for Green Tech Pilot" on the EFS-Web screen.

Telephone inquiries concerning this decision should be directed to Lee W. Young at 571-272-4549.

The application is being forwarded to the Technology Center Art Unit 2839 for action in its regular turn.

Lee W. Young
Quality Assurance Specialist
Technology Center 2800

**Certificate of Electronic Transmission**

I hereby certify that this correspondence is being electronically transmitted to the U.S. Patent and Trademark Office via EFS-WEB on March 1, 2011.

/William R. Allen/ — March 1, 2011

William R. Allen, Ph.D. Reg. No, 48,389 — Date

**IN THE UNITED STATES PATENT AND TRADEMARK OFFICE**

| | |
|---|---|
| Applicants: | Bing Li, et al. |
| Serial No.: | 13/008,202 |
| Filed: | January 18, 2011 |
| Group Art Unit: | 2839 |
| Examiner: | Unknown |
| Confirmation No.: | 8317 |
| Title: | METHOD FOR DETERMINING A ROTOR POSITION OF AN ELECTRICAL GENERATOR IN A WIND TURBINE |
| Attorney Docket: | VWS-101CO |

Cincinnati, Ohio 45202 March 1, 2011

**REQUEST FOR RECONSIDERATION OF DECISION ON PETITION TO MAKE SPECIAL UNDER THE GREEN TECHNOLOGY PILOT PROGRAM**

Mail Stop Office of Petitions
Commissioner for Patents
P.O. Box 1450
Alexandria, VA 22313-1450

Sir:

This communication is in response to the Decision on Petition from the United States Patent and Trademark Office ("USPTO") dated February 23, 2011 dismissing the Applicants' February 8, 2011 Petition to make special under the Green Technology Pilot Program ("Green Technology Petition"). The Applicant submits that the Green Technology Petition fully satisfies the requirements set forth in 74 Federal Register Notice 64666 (December 8, 2009).

Accordingly, the Applicant respectfully requests reconsideration of the Decision on Petition and that the Examiner to grant the Applicant's petition to make special under the Green Technology Pilot Program.

Even in the absence of a statement by the Applicant, the disclosure of the subject patent application on its face satisfies the materiality standard for the claimed invention. The Notice specifically states that the "term renewable energy resources for purposes of the procedure specified in this notice includes...wind." 74 Federal Register, page 64667, column 3. The disclosure of the specification is specifically directed to a wind turbine (*see, e.g.,* Figure 1) that relies on wind energy as a renewable energy resource, and specifically to methods for determining a rotor position of a synchronous electrical generator "in a wind turbine" (*see e.g.,* Title of the Invention; statement of Technical Field). The Applicant respectfully submits that the materiality standard is met on the face of the disclosure of the patent application in that the claimed invention materially contributes to the development of renewable energy resources, in this instance wind energy.

In the February 23, 2011 Decision, the Examiner claims as a basis for the dismissal of Applicant's February 8, 2011 Petition that the "recitation of wind turbine in the claims is considered intended use". However, this observation by the Examiner regarding the claimed invention would seem to be immaterial to the satisfaction of the materiality standard. The standard is whether or not the "application disclosure" is "clear on its face" that the claimed invention "materially contributes to the development of renewable energy". The content of the claim is not determinative. Instead, the Applicant's specification is evaluated for the presence or absence of a clear indication of a contribution to the development of renewable energy by the

claimed invention. This is the relevant exercise for making a determination of whether the materiality standard is satisfied for the claimed invention. In this instance, the Applicant's specification is explicit that the claimed invention related to wind as a renewable energy resource and, in particular, to wind turbines. Hence, without any substantive analysis of the "recitation of wind turbine in the claims" or whether that recitation is an "intended use" as suggested by the Examiner, the materiality standard is satisfied.

While the materiality is satisfied by the Applicant's specification on its face, the Applicant further submits that the materiality standard is met for reasons set forth below.

Contrary to the position expressed by the Examiner in the February 23, 2011 Decision, the Applicant is not speculating as to how a hypothetical end-user might specially apply the invention in a manner that could materially contribute to development of a renewable energy resource. As mentioned above, the Applicant's specification specifically pertains to wind turbines and how the invention contributes to the operational reliability of a wind turbine by monitoring the health of an encoder in real time and sending an alarm if a failure and malfunction is detected. *See* paragraph [0010]. The Applicant is not speculating as to a hypothetical end user. In this instance, the end user is unambiguously a supervisor for the operation of a wind turbine. The encoder is configured to supply "an encoder failure signal to a system supervision configured to take necessary action and start ramping down the *[wind]* turbine power". *See* paragraph [0037]. One material contribution to the development of wind as a renewable energy resource is that the rotor position of a electrical generator for a wind turbine may be determined and used for offset calibration in a manner that "more accurate and requires less processing time". *See* paragraph [0009]. The improvement to the offset calibration will

improve the operational reliability of the wind turbine, which increases the development of wind energy as a resource by enhancing the operational time over which a wind turbine can be reliably operated to generate energy. These are additional material contributions to the development of wind as a renewable energy resource. This application for the invention is not speculation, but subject matter specifically set forth in the Applicant's specification.

In conclusion, the Applicant submits that the requirements under the Green Technology Pilot Program, including the materiality standard, have been fully satisfied and respectfully request that, upon reconsideration, the Examiner grant Applicants' Green Technology Petition.

Applicant does not believe any fees are due in connection with filing this communication. If, however, any fees are necessary as a result of this communication, the Commissioner is hereby authorized to charge any under-payment or fees associated with this communication or credit any over-payment to Deposit Account No. 23-3000.

Respectfully submitted,
WOOD, HERRON & EVANS, L.L.P.

/William R. Allen/
William R. Allen, Ph.D.
Reg. No, 48,389

2700 Carew Tower
441 Vine Street
Cincinnati, OH 45202
(513) 241-2324 (voice)
(513) 421-7269 (facsimile)
wallen@whepatent.com

UNITED STATES PATENT AND TRADEMARK OFFICE

UNITED STATES DEPARTMENT OF COMMERCE
United States Patent and Trademark Office
Address: COMMISSIONER FOR PATENTS
P.O. Box 1450
Alexandria, Virginia 22313-1450
www.uspto.gov

| APPLICATION NO. | FILING DATE | FIRST NAMED INVENTOR | ATTORNEY DOCKET NO. | CONFIRMATION NO. |
|---|---|---|---|---|
| 13/008,202 | 01/18/2011 | Bing Li | VWS-101CO | 8317 |

83583 7590 04/22/2011
Wood, Herron & Evans, LLP (Vestas Wind Systems)
441 Vine Street
2700 Carew Tower
Cincinnati, OH 45202

| EXAMINER | |
|---|---|
| GONZALEZ, JULIO C | |
| ART UNIT | PAPER NUMBER |
| 2839 | |

| NOTIFICATION DATE | DELIVERY MODE |
|---|---|
| 04/22/2011 | ELECTRONIC |

**Please find below and/or attached an Office communication concerning this application or proceeding.**

The time period for reply, if any, is set in the attached communication.

Notice of the Office communication was sent electronically on above-indicated "Notification Date" to the following e-mail address(es):

amalik@whepatent.com
eobrien@whepatent.com
USPTODOCK@whepatent.com

UNITED STATES PATENT AND TRADEMARK OFFICE

Commissioner for Patents
United States Patent and Trademark Office
P.O. Box 1450
Alexandria, VA 22313-1450
www.uspto.gov

Wood, Herron & Evans, LLP (Vestas Wind Systems)
441 Vine Street
2700 Carew Tower
Cincinnati OH 45202

| | | |
|---|---|---|
| In re Application of | : | |
| LI et al. | : | DECISION ON PETITION |
| Application No. 13/008,202 | : | TO MAKE SPECIAL UNDER |
| Filed: January 18, 2011 | : | THE GREEN TECHNOLOGY |
| Attorney Docket No. VWS-101CO | : | PILOT PROGRAM |

This is a decision on the petition under 37 CFR 1.102, filed on February 08, 2011 and renewed on March 01, 2011, to make the above-identified application special under the pilot program for applications pertaining to Green Technologies as set forth 74 Federal Register Notice 64666 (December 8, 2009) and amended by 75 Federal Register Notice 28554 (May 21, 2010) and 75 Federal Register Notice 69049 (November 10, 2010).

The petition is **DENIED**.

A grantable petition to make an application special under 37 CFR 1.102 and the pilot program as set forth in 74 FR 64666 must be directed to a nonprovisional application filed under 35 USC 111(a) or be a national stage entry under 35 USC 371, exclusive of any reissue applications and be filed prior to the date of the notice, December 8, 2009.

In order to qualify for special status, the following requirements must be met. 1) The application must have no more than 3 independent claims and no more than 20 total claims. 2) The application must not contain any multiple dependent claims. 3) The petition must state the basis for seeking special status, i.e., the claimed invention either: A) materially enhances the quality of the environment or B) materially contributes to: i) the discovery or development of renewable energy resources, ii) the more efficient utilization and conservation of energy resources, or iii) greenhouse gas emission reduction. 4) If the disclosure is not clear on its face that the claimed invention materially contributes under category (A) or (B), the petition must be accompanied by a statement by the applicant, assignee, or an attorney/agent registered to practice before the Office explaining how the materiality standard is met. 5) A statement that applicant will agree to make an election without traverse in a telephonic interview if a restriction requirement is made by the examiner. 6) The petition to make special must be filed electronically. 7) The petition must be filed at least one day prior to the date that a first Office Action appears in the Patent Application Information Retrieval (PAIR) system. 8) The petition must be accompanied by a request for early publication in compliance with 37 CFR 1.219 and include the publication fee as set forth in 37 CFR 1.18(d).

The requirement for a fee for consideration of the petition to make special for applications pertaining to Green Technologies has been waived.

The petition lacks item 4.

Requirement 4 of the Green Technology pilot states "(T)he **claims** must be directed to a single invention that materially enhances the quality of the environment, or that materially contributes to: (1) The discovery or development of renewable energy resources; (2) the more efficient utilization and conservation of energy resources; or (3) greenhouse gas emission reduction." This requirement is not satisfied by the specification indicating that the claimed invention can be used with a green technology. The instant claims are not directed to a green technology as required by the pilot.

No further reconsideration of this matter will be undertaken

The application is being forwarded to the Technology Center Art Unit 2839 for action in its regular turn.

Lee W. Young
Quality Assurance Specialist
Technology Center 2800

UNITED STATES PATENT AND TRADEMARK OFFICE

Commissioner for Patents
United States Patent and Trademark Office
P.O. Box 1450
Alexandria, VA 22313-1450
www.uspto.gov

ABELMAN, FRAYNE & SCHWAB
666 THIRD AVENUE, 10TH FLOOR
NEW YORK NY 10017

MAILED

MAR 23 2011

OFFICE OF PETITIONS

In re Application of :
Phillips :
Application No. 13/008,269 : ON PETITION
Filed: January 18, 2011 :
Attorney Docket No. 211.280 :

This is a decision on the "PETITION UNDER 37 C.F.R. 1.57(a)" filed February 16, 2011, requesting amendment of the application to include inadvertently omitted pages 12-13 of the specification.

The petition is **dismissed**.

The application was filed on January 18, 2011. Although pages 12-13 of the specification were not present on January 18, 2011, a filing date was granted.

Applicant filed pages 12-13 of the specification and the instant petition. Petitioner states that pages 12-13 were inadvertently omitted but the application as filed contained a prior benefit claim under 37 CFR 1.55 to a prior filed PCT Application WO 2006/066323 in which the inadvertently omitted pages 12-13 of specification can be found.

Applicants are advised that a petition is not necessary in this instance to add the omitted drawings.

The MPEP 201.17 states that

> In addition to filing the amendment to add the inadvertently omitted material, applicant is also required to: (A) supply a copy of the prior-filed application, except where the prior-filed application is an application filed under 35 U.S.C. 111; (B) supply an English-language translation of any prior-filed application that is in a language other than English; and (C) identify where the inadvertently omitted portion of the specification or drawings can be found in the prior-filed application.

37 CFR 1.57(a), incorporation by reference, provides a method whereby an applicant may amend an application to include an inadvertently omitted portion of the specification or drawing(s).

However, where a filing date has been accorded an application, a petition is not necessary to add the omitted portion of the specification or drawing(s).

The Manual of Patent Examining Procedure ("MPEP") also provides that

> ...37 CFR 1.57(a) was added to provide a safeguard for applicants when a page(s) of the specification, or a portion thereof, or a sheet(s) of the drawing(s), or a portion thereof, is inadvertently omitted from an application, such as through a clerical error. 37 CFR 1.57(a) applies to applications filed on or after September 21, 2004. 37 CFR 1.57(a) permits inadvertently omitted material to be added to the application by way of a later filed amendment if the inadvertently omitted portion of the specification or drawing(s) is completely contained in a prior-filed application (for which priority/benefit is claimed) even though there is no explicit incorporation by reference of the prior-filed application. *See* MPEP § 201.17 for discussion regarding 37 CFR 1.57(a). *See* MPEP § 601.01(p). (Emphasis supplied).

MPEP 201.06(c)(IV)(B).

No petition is required.[1] The Amendment to include the inadvertently omitted portions of the specification filed February 16, 2011, will be considered by the Examiner in due course.

It should however be noted, upon filing there was a claim pursuant to 37 CFR 1.55 for Australian Application no. 2004 907338 filed December 24, 2004. The record does reflect a claim of priority to PCT Application WO 2006/066323 A1.

The application will maintain the filing date of **January 18, 2011**, using the application papers filed on that date.

The application will be referred to the Office of Patent Application Processing for further processing in the normal course of business.

Telephone inquiries concerning this matter should be directed Attorney Charlema Grant at (571) 272-315.

Christopher Bottorff
Supervisor
Office of Petitions

[1] However, when a petition is requested a petition fee is required and will not be refunded.

UNITED STATES PATENT AND TRADEMARK OFFICE

Commissioner for Patents
United States Patent and Trademark Office
P.O. Box 1450
Alexandria, VA 22313-1450
www.uspto.gov

THE LAW OFFICE OF MICHAEL E.
KONDOUDIS
888 16TH STREET NW
SUITE 800
WASHINGTON DC 20006

MAILED
FEB 03 2012
OFFICE OF PETITIONS

| | | |
|---|---|---|
| In re Application of | : | DECISION |
| Poznansky, et al. | : | ON PETITION |
| Application No. 13/008,302 | : | |
| Filed: January 18, 2011 | : | |
| Attorney Docket Number: 1500.0081 | : | |

This is in response to the petition under 37 CFR 1.84(a)(2), filed January 18, 2011, for acceptance of color drawings.

The petition is **DISMISSED**.

Any request for reconsideration of this decision must be submitted within **TWO (2) MONTHS** from the mail date of this decision. Extensions of time under 37 CFR 1.136(a) are permitted. The reconsideration request should include a cover letter entitled, "Renewed Petition under 37 CFR 1.84(a)(2)". No further petition fee is required for a renewed petition.

A grantable petition under 37 C.F.R. 1.84(a)(2) must be accompanied by the following:

(1) The fee set forth in 37 C.F.R. 1.17(h);

(2) Three (3) sets of color drawings, or one (1) set if filed via EFS, and

(3) The specification contains appropriate language referring to the color drawings as the first paragraph in that portion of the specification relating to the brief description of the drawings.

In addition, MPEP 608.02 states that a petition to accept color drawings will only be granted when the Office "has determined that a color drawing or photograph is the only practical medium by which to disclose in a printed utility patent the subject matter to be patented."

Here, the Office has determined that color drawings are not the only practical medium by which to disclose the subject matter. See, e.g. MPEP 608.02, Section IX, which states that drawing symbols can be used to indicate various materials where the material is an important feature of the invention.

Further correspondence with respect to this matter should be addressed as follows:

By mail: Mail Stop Petitions
Commissioner for Patents
PO Box 1450
Alexandria VA 22313-1450

By FAX: 571-273-8300
Attn: Office of Petitions

The application is being forwarded to Group Art Unit 2876.

Telephone inquiries regarding this decision should be directed to the undersigned at (571)272-3207.

Cliff Congo
Petitions Attorney
Office of Petitions

**Doc Code: PET.GREEN**
**Document Description: Petition for Green Tech Pilot**

PTO/SB/420 (11-10)
Approved for use through 01/31/2011. OMB 0651-0062
U.S. Patent and Trademark Office; U. S. DEPARTMENT OF COMMERCE
Under the Paperwork Reduction Act of 1995, no persons are required to respond to a collection of information unless it displays a valid OMB control number.

# PETITION TO MAKE SPECIAL UNDER THE GREEN TECHNOLOGY PILOT PROGRAM

| Attorney Docket Number: 32867.004.01 | Application Number (if known): TBD | Filing date: January 18, 2011 |
|---|---|---|
| First Named Inventor: Richard E. RIMAN | | |
| Title: SEQUESTRATION OF A GAS EMITTED BY AN INDUSTRIAL PLANT | | |

**APPLICANT HEREBY REQUESTS TO PARTICIPATE IN THE GREEN TECHNOLOGY PILOT PROGRAM FOR THE ABOVE-IDENTIFIED APPLICATION. See Instruction Sheet on page 2.**

This petition must be timely filed electronically using the USPTO electronic filing system, EFS-Web.

1. By filing this petition:

   **Applicant is requesting early publication: Applicant hereby requests early publication under 37 CFR 1.219 and the publication fee set forth in 37 CFR 1.18(d) accompanies this request.**

2. By filing this petition: applicant is agreeing to make an election without traverse in a telephonic interview and elect an invention that meets the eligibility requirements for the Green Technology Pilot Program, if the Office determines that the claims are not obviously directed to a single invention. See Instruction Sheet.

3. This request is accompanied by statements of special status for the eligibility requirement.

4. The application contains no more than three (3) independent claims and twenty (20) total claims.

5. The application does not contain any multiple dependent claims.

6. Other attachments: _____

| Signature /Renzo N. Rocchegiani/ | Date January 18, 2011 |
|---|---|
| Name (Print/Typed) Renzo N. Rocchegiani | Registration Number 54,824 |

***Note:*** *Signatures of all the inventors or assignees of record of the entire interest or their representative(s) are required in accordance with 37 CFR 1.33 and 11.18. Please see 37 CFR 1.4(d) for the form of the signature. If necessary, submit multiple forms for more than one signature see below*.*

[X] *Total of 1 forms are submitted.

The information is required to obtain or retain a benefit by the public which is to file (and by the USPTO to process) an application. Confidentiality is governed by 35 U.S.C. 122 and 37 CFR 1.11 and 1.14. This collection is estimated to take 12 hours to complete, including gathering, preparing, and submitting the completed application form to the USPTO. Time will vary depending upon the individual case. Any comments on the amount of time you require to complete this form and/or suggestions for reducing this burden, should be sent to the Chief Information Officer, U.S. Patent and Trademark Office, U.S. Department of Commerce, P.O. Box 1450, Alexandria, VA 22313-1450. DO NOT SEND FEES OR COMPLETED FORMS TO THIS ADDRESS. **SEND TO: Commissioner for Patents, P.O. Box 1450, Alexandria, VA 22313-1450.**

*If you need assistance in completing the form, call 1-800-PTO-9199 and select option 2.*

PTO/SB/420 (11-10)
Approved for use through 01/31/2011. OMB 0651-0062
U.S. Patent and Trademark Office; U. S. DEPARTMENT OF COMMERCE
Under the Paperwork Reduction Act of 1995, no persons are required to respond to a collection of information unless it displays a valid OMB control number.

# Instruction Sheet for Petition to Make Special Under the Green Technology Pilot Program

(Not to be Submitted to the USPTO)

**The following is a summary of the requirements (for more information see the notices (i) "Pilot Program for Green Technologies Including Greenhouse Gas Reduction," (ii) "Elimination of Classification Requirement in the Green Technology Pilot Program," and (iii) "Expansion and Extension of the Green Technology Pilot Program," available on the USPTO web site at http:// www.uspto.gov/patents/init_events/green_tech.jsp):**

1) The application must be a non-reissue, non-provisional utility application filed under 35 U.S.C. 111 (a), or an international application that has entered the national stage in compliance with 35 U.S.C. 371, irrespective of the filing date of the application. Reexamination proceedings are excluded from this pilot program.

2) The application must contain three or fewer independent claims and twenty or fewer total claims. The application must not contain any multiple dependent claims. For an application that contains more than three independent claims or twenty total claims, or multiple dependent claims, applicant must file a preliminary amendment in compliance with 37 CFR 1.121 to cancel the excess claims and/or the multiple dependent claims at the time the petition to make special is filed.

3) The claims must be directed to a single invention that materially enhances the quality of the environment, or that materially contributes to: (1) the discovery or development of renewable energy resources; (2) the more efficient utilization and conservation of energy resources; or (3) green house gas emission reduction (see the eligibility requirements of sections II and III of the notice (i) cited above). The petition must include a statement that, if the USPTO determines that the claims are directed to multiple inventions (e.g., in a restriction requirement), applicant will agree to make an election without traverse in a telephonic interview, and elect an invention that meets the eligibility requirements in section II or III of the notice (i) cited above.

4) The petition to make special must be timely filed electronically using the USPTO electronic filing system, EFS-Web, and selecting the document description of "Petition for Green Tech Pilot" on the EFS-Web screen. Applicant should use form PTO/SB/420, which is available as a Portable Document Format (PDF) fillable form in EFS-Web and on the USPTO Web site.

5) The petition to make special must be filed at least one day prior to the date that a first Office action (which may be an Office action containing only a restriction requirement) appears in the Patent Application Information Retrieval (PAIR) system. Applicant may check the status of the application using PAIR.

6) The petition to make special must be accompanied by a request for early publication in compliance with 37 CFR 1.219 and the publication fee set forth in 37 CFR 1.18(d).

## Privacy Act Statement

The **Privacy Act of 1974 (P.L. 93-579)** requires that you be given certain information in connection with your submission of the attached form related to a patent application or patent. Accordingly, pursuant to the requirements of the Act, please be advised that: (1) the general authority for the collection of this information is 35 U.S.C. 2(b)(2); (2) furnishing of the information solicited is voluntary; and (3) the principal purpose for which the information is used by the U.S. Patent and Trademark Office is to process and/or examine your submission related to a patent application or patent. If you do not furnish the requested information, the U.S. Patent and Trademark Office may not be able to process and/or examine your submission, which may result in termination of proceedings or abandonment of the application or expiration of the patent.

The information provided by you in this form will be subject to the following routine uses:

1. The information on this form will be treated confidentially to the extent allowed under the Freedom of Information Act (5 U.S.C. 552) and the Privacy Act (5 U.S.C 552a). Records from this system of records may be disclosed to the Department of Justice to determine whether disclosure of these records is required by the Freedom of Information Act.
2. A record from this system of records may be disclosed, as a routine use, in the course of presenting evidence to a court, magistrate, or administrative tribunal, including disclosures to opposing counsel in the course of settlement negotiations.
3. A record in this system of records may be disclosed, as a routine use, to a Member of Congress submitting a request involving an individual, to whom the record pertains, when the individual has requested assistance from the Member with respect to the subject matter of the record.
4. A record in this system of records may be disclosed, as a routine use, to a contractor of the Agency having need for the information in order to perform a contract. Recipients of information shall be required to comply with the requirements of the Privacy Act of 1974, as amended, pursuant to 5 U.S.C. 552a(m).
5. A record related to an International Application filed under the Patent Cooperation Treaty in this system of records may be disclosed, as a routine use, to the International Bureau of the World Intellectual Property Organization, pursuant to the Patent Cooperation Treaty.
6. A record in this system of records may be disclosed, as a routine use, to another federal agency for purposes of National Security review (35 U.S.C. 181) and for review pursuant to the Atomic Energy Act (42 U.S.C. 218(c)).
7. A record from this system of records may be disclosed, as a routine use, to the Administrator, General Services, or his/her designee, during an inspection of records conducted by GSA as part of that agency's responsibility to recommend improvements in records management practices and programs, under authority of 44 U.S.C. 2904 and 2906. Such disclosure shall be made in accordance with the GSA regulations governing inspection of records for this purpose, and any other relevant (*i.e.*, GSA or Commerce) directive. Such disclosure shall not be used to make determinations about individuals.
8. A record from this system of records may be disclosed, as a routine use, to the public after either publication of the application pursuant to 35 U.S.C. 122(b) or issuance of a patent pursuant to 35 U.S.C. 151. Further, a record may be disclosed, subject to the limitations of 37 CFR 1.14, as a routine use, to the public if the record was filed in an application which became abandoned or in which the proceedings were terminated and which application is referenced by either a published application, an application open to public inspection or an issued patent.
9. A record from this system of records may be disclosed, as a routine use, to a Federal, State, or local law enforcement agency, if the USPTO becomes aware of a violation or potential violation of law or regulation.

UNITED STATES PATENT AND TRADEMARK OFFICE

UNITED STATES DEPARTMENT OF COMMERCE
United States Patent and Trademark Office
Address: COMMISSIONER FOR PATENTS
P.O. Box 1450
Alexandria, Virginia 22313-1450
www.uspto.gov

| APPLICATION NO. | FILING DATE | FIRST NAMED INVENTOR | ATTORNEY DOCKET NO. | CONFIRMATION NO. |
|---|---|---|---|---|
| 13/008,422 | 01/18/2011 | Richard E. RIMAN | 32867.004.01 | 8750 |

30827 7590 04/29/2011
MCKENNA LONG & ALDRIDGE LLP
1900 K STREET, NW
WASHINGTON, DC 20006

| EXAMINER | |
|---|---|
| BERNS, DANIEL J | |

| ART UNIT | PAPER NUMBER |
|---|---|
| 1734 | |

| MAIL DATE | DELIVERY MODE |
|---|---|
| 04/29/2011 | PAPER |

**Please find below and/or attached an Office communication concerning this application or proceeding.**

The time period for reply, if any, is set in the attached communication.

UNITED STATES PATENT AND TRADEMARK OFFICE

Commissioner for Patents
United States Patent and Trademark Office
P.O. Box 1450
Alexandria, VA 22313-1450
www.uspto.gov

MCKENNA LONG & ALDRIDGE LLP
1900 K STREET, NW
WASHINGTON DC 20006

4/29/2011

| | | |
|---|---|---|
| In re Application of | : | |
| Riman et al. | : | DECISION ON PETITION |
| Application No. 13/008,422 | : | TO MAKE SPECIAL UNDER |
| Filed: 1/18/2011 | : | THE GREEN TECHNOLOGY |
| Attorney Docket No. **32867.004.01** | : | PILOT PROGRAM |

This is a decision on the petition under 37 CFR 1.102, filed petition date, to make the above-identified application special under the pilot program for applications pertaining to Green Technologies as set forth in 74 Federal Register Notice 64666 (December 8, 2009) and amended by 75 Federal Register Notice 28554 (May 21, 2010) and 75 Federal Register Notice 69049 (November 10, 2010).

The petition is **GRANTED**.

A grantable petition to make an application special under 37 CFR 1.102 and the pilot program as set forth in 74 FR 64666 must be directed to a nonprovisional application filed under 35 USC 111(a) or be a national stage entry under 35 USC 371, exclusive of any reissue applications.

In order to qualify for special status, the following requirements must be met. 1) The application must have no more than 3 independent claims and no more than 20 total claims. 2) The application must not contain any multiple dependent claims. 3) The petition must state the basis for seeking special status, i.e., the claimed invention either: A) materially enhances the quality of the environment or B) materially contributes to: i) the discovery or development of renewable energy resources, ii) the more efficient utilization and conservation of energy resources, or iii) greenhouse gas emission reduction. 4) If the disclosure is not clear on its face that the claimed invention materially contributes under category (A) or (B), the petition must be accompanied by a statement by the applicant, assignee, or an attorney/agent registered to practice before the Office explaining how the materiality standard is met. 5) A statement that applicant will agree to make an election without traverse in a telephonic interview if a restriction requirement is made by the examiner. 6) The petition to make special must be filed electronically. 7) The petition must be filed at least one day prior to the date that a first Office Action appears in the Patent Application Information Retrieval (PAIR) system. 8) The petition must be accompanied by a request for early publication in compliance with 37 CFR 1.219 and include the publication fee as set forth in 37 CFR 1.18(d).

The requirement for a fee for consideration of the petition to make special for applications pertaining to Green Technologies has been waived.

The instant petition complies with items 1 – 8 above. Accordingly, the above-identified application has been accorded "special" status.

Telephone inquires concerning this decision should be directed to Tom Dunn at 571-272-1171.

The application is being forwarded to the Technology Center Art Unit 1734 for action on the merits commensurate with this decision.

/Tom Dunn/

Tom Dunn
Quality Assurance Specialist
Technology Center 1700

UNITED STATES PATENT AND TRADEMARK OFFICE

Commissioner for Patents
United States Patent and Trademark Office
P.O. Box 1450
Alexandria, VA 22313-1450
www.uspto.gov

APR 18 2011

The Belles Group, P.C.
404 S. 16th Street
Philadelphia PA 19146

| | | |
|---|---|---|
| In re Application of: Tsafrir Sen-Ari | : | |
| Application No.: 13/008510 | : | DECISION ON PETITION TO MAKE SPECIAL FOR NEW APPLICATION UNDER 37 C.F.R. § 1.102 & M.P.E.P. § 708.02 |
| Filed: January 18, 2011 | : | |
| Title: MOTORIZED SHAVING APPARATUS HEAD AND SHAVING APPARATUS IMPLEMENTING THE SAME | : | |

This is a decision on the petition filed on January 18, 2011 to make the above-identified application special for accelerated examination procedure under 37 C.F.R. § 1.102(d).

The petition to make the application special is **DISMISSED**.

REGULATION AND PRACTICE

A grantable petition to make special under 37 C.F.R. § 1.102(d) and pursuant to the "Change to Practice for Petitions in Patent Applications to Make Special and for Accelerated Examination" published in the Federal Register on June 26, 2006 (71 Fed. Reg. 36323), must satisfy the following conditions:

I. Conditions Regarding the Application:

1. the application must be a non-reissue utility or design application filed under 37 CFR 1.111(a);

2. the application, the petition and the required fees must be filed electronically using the USPTO's electronic filing system (EFS), or EFS-web; if not filed electronically, a statement asserting that EFS and EFS-web were not available during the normal business hours.

3. at the time of filing, the application must be complete under 37 CFR 1.51 and in condition for examination;

4. the application must contain three or fewer independent claims and twenty or fewer total claims and the claims must be directed to a single invention.

II. Conditions Regarding the Petition:

The petition must:

1. be filed with the application;

2. include a statement that applicant agrees not to separately argue the patentability of any independent claim during any appeal in the application;

3. include a statement that applicant agrees to make an election without traverse in a telephone interview.

4. include a statement that applicant agrees to conduct such an interview when requested by the examiner.

5. include a statement, made based on a good faith belief, that a preexamination search in compliance with the following requirements, was conducted, including an identification of the field of search by United States class and subclass, where applicable, and for database searches, the search logic or chemical structure or sequence used as a query, the name of the file(s) searched and the database service, and the date of the search.

The preexamination search must:

5.1 involve U.S. patents and patent application publications, foreign patent documents, and non-patent literature, unless the applicant can justify with reasonable certainty that no references more pertinent than those already identified are likely to be found in the eliminated sources and includes such a justification with this statement;

5.2. be directed to the claimed invention and encompass all of the features of the claims, giving the claims the broadest reasonable interpretation;

5.3. encompass the disclosed features that may be claimed.

6. must provide in support of the petition an accelerated examination support document. An accelerated examination support document must include:

6.1. an information disclosure statement (IDS) in compliance with 37 CFR 1.98 citing each reference deemed most closely related to the subject matter of each of the claims;

6.2. an identification of all the limitations in the claims that are disclosed by the reference specifying where the limitation is disclosed in the cited reference;

6.3. a detailed explanation of how each of the claims are patentable over the references cited with particularity required by 37 CFR 1.111(b) and (c);

6.4. a concise statement of the utility of the invention as defined in each of the independent claims (unless the application is a design application);

6.5. a showing of where each limitation of the claims finds support under 35 U.S.C. 112, first paragraph, in the written description of the specification. If applicable, the showing must also identify: (1) each means- (or step) plus-function claim element that invokes consideration under 35 U.S.C. 112, sixth paragraph; and (2) the structure, material, or acts in the specification that corresponds to each means- (or step) plus-function claim element that invokes consideration under 35 U.S.C. 112, sixth paragraph; if the application claims the benefit of one or more applications under title 35, United States Code, the showing must also include where each limitation of the claims finds support under 35 U.S.C. 112, first paragraph, in each such application in which such supports exists;

6.6. an identification of any cited references that may be disqualified under 35 U.S.C. 103(c).

## REVIEW OF FACTS

The conditions I:1-4, II: 1-5, 5.3, 6, 6.1, 6.2, 6.4, 6.5, and 6.6 above are considered to have been met. However, the petition fails to comply with conditions II : 5.1, 5.2, and 6.3 above.

Therefore, the petition fails to meet the required conditions to be accorded special status under the accelerated examination procedure.

**Discussion**

When referring to "the petition" hereinbelow, the received papers under consideration include the PTO/SB/28 form, the "pre-examination search document" including pages 1-22; the "accelerated examination support document" comprising pages 1-64, and an Information Disclosure Statement including form PTO/SB/08A.

Regarding the requirements of section II element 5.1 and 5.2 outlined above, it appears the search outlined in the petition omitted a critical search area by not searching in class 30 subclasses 43.4, 43.5, 43.6, 45, 346.5, Dig. 2, and 42. While some of the subclasses of class 30 were listed in petitioner's search, is it not clear whether the patents in these subclasses were evaluated individually since applicant's search strategy indicates that the hits of the class subclass search (L10) were not analyzed. Clarification is needed for these subclasses.

With respect to the requirements of section II element 6.3 outlined above, the petition fails to provide a detailed explanation of how each of the claims are patentable over (each of) the reference(s) with particularity required by 37 CFR 1.111(b) and (c). Petitioners should be specific in their explanation and include the identification of specific claim limitations that support their position, where appropriate. Petitioners must distinguish each claim from each piece of prior art cited. General statements that the claims are neither anticipated nor rendered obvious by the cited references or that the references are not properly combinable will not be acceptable. The Office cannot infer or guess what petitioner believes the differences between the claims and the teachings of the prior art to be. Petitioner's statements must also be consistent and must be related to the claim language. In the instant petition with regard to independent claim 15, since the claim is not of identical scope as claim 1 it's discussion of patentability must be separate and directed only to the language in this claim and not refer back to claim 1. In regard to the dependent claims, it is not clear what is meant by the language, for example with regard to claim 2, "At current time, Applicant will allow patentability of dependent claim 2 to stand or fall with the patentability of independent claim 1." in discussion of some of the dependent claims. This language does not clearly address the patentability of these dependent claims. The use of "At current time" and "will allow" seems to imply that petitioner may later want to be able to take a position different to this current position which does not assist the examiner in evaluation of the prior art and claims. A statement that the dependent claims are allowable because the independent claims are patentable is not sufficient. This does not provide guidance to the examiner as to whether the limitations could provide patentability should the examiner find the independent claims unpatentable.

DECISION

For the above-stated reasons, the petition is **dismissed**. The application will therefore be taken up by the examiner for action in its regular turn.

Petitioner is given a single opportunity to perfect the petition. Any request for reconsideration of this decision must be submitted within 1 (one) month or 30 (thirty) days, whichever is longer, (no extension of time under 37 CFR 1.136(a)) from the date of this decision in order to be considered timely. Any request for reconsideration must address all of the deficiencies indicated above.

Petitioner is reminded that, upon granting of the special status of the application on request for reconsideration, the application will be processed expeditiously. However, due to the dismissal of the instant petition, examination may not be completed within twelve months of the filing date of the application.

Any inquiry regarding this decision should be directed to Linda J. Sholl, TC 3700 Special Programs Examiner, at (571) 272-4391.

/Linda J. Sholl/
Linda J. Sholl
Special Programs Examiner
Technology Center 3700

UNITED STATES PATENT AND TRADEMARK OFFICE

Commissioner for Patents
United States Patent and Trademark Office
P.O. Box 1450
Alexandria, VA 22313-1450
www.uspto.gov

MAY 2 4 2011

The Belles Group, P.C.
404 S. 16th Street
Philadephia PA 19146

| | |
|---|---|
| In re Application of: Tsafrir Ben-Ari<br>Application No.: 13/008510<br>Filed: January 18, 2011<br>Title: MOTORIZED SHAVING APPARATUS HEAD AND SHAVING APPARATUS IMPLEMENTING THE SAME | DECISION ON PETITION TO MAKE SPECIAL FOR NEW APPLICATION UNDER 37 C.F.R. § 1.102 & M.P.E.P. § 708.02 |

This is a decision on the renewed petition filed on May 17, 2011 to make the above-identified application special for accelerated examination procedure under 37 C.F.R. § 1.102(d).

The petition to make the application special is GRANTED.

The application is eligible for accelerated examination and the petition complies with the conditions for granting the application special status pursuant to the "Change to Practice for Petitions in Patent Applications to Make Special and for Accelerated Examination" published June 26, 2006, in the Federal Register. (71 Fed. Reg. 36323).

The prosecution of the instant application will be conducted expeditiously according to the following guidelines.

1. The application will be docketed to an examiner and taken up for action within two weeks of the date of this decision.

2. Restriction Practice:
   If the examiner determines that the claims are not directed to a single invention, a telephone request to elect one single invention will be made pursuant to MPEP 812.01. As a prerequisite to the grant of this petition, the applicant has agreed to make an oral election, by telephone, without traverse. If the applicant refuses to make an election without traverse, or the examiner cannot reach the applicant after a reasonable effort, the examiner will treat the first claimed invention (invention defined by claim 1) as having being constructively elected without traverse for examination.

3. Office action:
If it is determined that, after appropriate consultation, there is a potential rejection or any other issue to be addressed, the examiner will telephone the applicant and arrange an interview to discuss and resolve the issue. An Office action, other than a Notice of Allowance and Fee(s) Due (Notice of Allowance), will not be issued unless either: 1) an interview was conducted but did not result in agreed to action that places the application in condition for allowance, or, 2) a determination is made that an interview would be unlikely to result in the application being placed in condition for allowance, and 3) an internal conference has been held to review any rejection of any claim.

4. Time for Reply:
An Office action other than a Notice of Allowance or a final Office action will set a shortened statutory period of one month or thirty days, whichever is longer, for reply with no extension of time available under 37 CFR 1.136(a). Failure to timely file a reply within this non-extendible period for reply will result in the abandonment of the application.

5. Reply by Applicant:
A timely reply to an Office action other than the Notice of Allowance must be submitted electronically via EFS or EFS-web and limited to addressing the rejections, objections and requirement made. Any amendment that attempts to: 1) add claims which would result in more than three pending independent claims or more than twenty pending total claims; 2) present claims not encompassed by the pre-examination search or an updated accelerated examination support document; or 3) present claims that are directed a non-elected invention or an invention other than that previously claimed and examined in the application, will be treated as not fully responsive and will not be entered.

   For any amendment to the claims (including any new claim) that is not encompassed by the accelerated examination support document, applicant must provide an updated accelerated examination support document that encompasses the amended or new claims at the time of filing of the amendment.

   To proceed expeditiously with the examination, it is recommended that a reply with amendments made to any claim or with any new claim being added be accompanied by an updated accelerated examination support document or a statement explaining how the amended or new claim is supported by the original accelerated examination support document.

6. Information Disclosure Statement (IDS):
Any IDS filed during prosecution must be submitted electronically via EFS or EFS-web, accompanied by an updated accelerated examination support document, and be in compliance with 37 CFR 1.97 and 1.98.

7. Post-Allowance Processing:
   To expedite processing of the allowed application into a patent, the applicant must: 1) pay the required fees within one month of the date of the Notice of Allowance, and 2) not file any post allowance papers not required by the Office. In no event may the issue fee be paid and accepted later than three months from the date of the Notice of Allowance.

8. After-Final and Appeal Procedures:
   To expedite prosecution, after receiving the final Office action, applicant must: 1) promptly file a notice of appeal, an appeal brief and appeal fees; and 2) not request a pre-appeal brief conference.

   Any amendment, affidavit or other evidence filed after final Office action must comply with applicable rules and the requirements outlined in numbered paragraphs 5 and 6 above.

   On appeal, the application will proceed according to normal appeal procedures. After appeal, the application will again be treated special.

9. Proceedings Outside the Normal Examination Process:
   If the application becomes involved in a proceeding that is outside the normal examination process (e.g., a secrecy order, national security review, interference proceeding, petitions under 37 CFR 1.181, 182 or 183), the application will be treated special before and after such proceeding.

10. Final Disposition:
    The twelve month goal of this accelerated examination procedure ends with a final disposition. The mailing of a final Office action, a Notice of Allowance, the filing of a Notice of Appeal, or the filing of a Request for Continued Examination (RCE) is the final disposition.

If, during prosecution, a paper is not filed electronically using EFS-web, a reply is filed but is not fully responsive, the application is involved in an appeal, or a proceeding outside normal examination process, the application will still be examined expeditiously, however, the final disposition may occur more than twelve months from the filing of the application.

Any inquiry regarding this decision should be directed to Linda Sholl at (571) 272-4391

/Linda Sholl/
Linda Sholl
Special Programs Examiner
Technology Center 3700

UNITED STATES PATENT AND TRADEMARK OFFICE

Commissioner for Patents
United States Patent and Trademark Office
P.O. Box 1450
Alexandria, VA 22313-1450
www.uspto.gov

MAILED

JAN 30 2012

OFFICE OF PETITIONS

**SITES & HARIBSON, PLLC**
**400 W MARKET ST**
**SUITE 1800**
**LOUISVILLE, KY 40202-3352**

| | | |
|---|---|---|
| In re Application of | : | |
| Daniel Haydon | : | |
| Application No. 13/008,536 | : | DECISION ON PETITION |
| Filed: January 18, 2011 | : | TO WITHDRAW |
| Attorney Docket No. HA393/000HA-U | : | FROM RECORD |
| | : | |

This is a decision on the Request to Withdraw as attorney or agent of record under 37 C.F.R. § 1.36(b), filed January 9, 2012.

The request is **APPROVED**.

A grantable request to withdraw as attorney/agent of record must be signed by every attorney/agent seeking to withdraw or contain a clear indication that one attorney is signing on behalf of another/others. A request to withdraw will not be approved unless at least 30 (thirty) days would remain between the date of approval and the later of the expiration date of a time to file a response or the expiration date of the maximum time period which can be extended under 37 C.F.R. § 1.136(a).

The request was signed by Jeffrey A. Haeberlin on behalf of all attorneys of record. All attorneys/agents have been withdrawn. Applicant is reminded that there is no attorney of record at this time.

All future correspondence will be directed to the first named inventor Daniel Haydon at the address indicated below.

Telephone inquiries concerning this decision should be directed to Terri Johnson at 571-272-2991.

/Terri Johnson/
Terri Johnson
Petitions Examiner
Office of Petitions

cc: **Daniel Haydon**
**5509 Briscoe Lane**
**Louisville, KY 40219**

UNITED STATES PATENT AND TRADEMARK OFFICE

UNITED STATES DEPARTMENT OF COMMERCE
United States Patent and Trademark Office
Address: COMMISSIONER FOR PATENTS
P.O. Box 1450
Alexandria, Virginia 22313-1450
www.uspto.gov

| APPLICATION NUMBER | FILING OR 371(C) DATE | FIRST NAMED APPLICANT | ATTY. DOCKET NO./TITLE |
|---|---|---|---|
| 13/008,536 | 01/18/2011 | Daniel Haydon | HA393/000HA-U |

**CONFIRMATION NO. 8975**

**POWER OF ATTORNEY NOTICE**

24350
STITES & HARBISON, PLLC
400 W MARKET ST
SUITE 1800
LOUISVILLE, KY 40202-3352

*OC000000052268995*

Date Mailed: 01/30/2012

## NOTICE REGARDING CHANGE OF POWER OF ATTORNEY

This is in response to the Power of Attorney filed 01/09/2012.

- The withdrawal as attorney in this application has been accepted. Future correspondence will be mailed to the new address of record. 37 CFR 1.33.

/tsjohnson/

Office of Data Management, Application Assistance Unit (571) 272-4000, or (571) 272-4200, or 1-888-786-0101

UNITED STATES PATENT AND TRADEMARK OFFICE

Commissioner for Patents
United States Patent and Trademark Office
P.O. Box 1450
Alexandria, VA 22313-1450
www.uspto.gov

CHEVRON CORPORATION
PO BOX 6006
SAN RAMON CA 94583-0806

MAILED
APR 08 2011
OFFICE OF PETITIONS

In re Application of :
Timken, et al. :
Application No. 13/008,633 : ON PETITION
Deposited: January 18, 2011 :
Attorney Docket No. T-6575-D1 :

This is in response to the "RESPONSE TO NOTICE OF INCOMPLETE NONPROVISIONAL APPLICATION", filed February 18, 2011, which is being treated as a petition under 37 CFR 1.53(e)(2).

Application papers in the above-identified application were deposited on January 18, 2011. However, on February 1, 2011, the Office of Patent Application Processing mailed applicants a "Notice of Incomplete Nonprovisional Application," notifying applicants that the application papers had not been accorded a filing date because the application was deposited without drawings. Applicants request that the application be accorded the filing date of January 18, 2011, based on an express incorporation by reference statement present in the specification on filing.

Petitioner's arguments and evidence have been considered. However, a review of the application confirms that, as filed, the application contained at least one process claim. MPEP 601.01(f) provides that:

> It has been USPTO practice to treat an application that contains at least one process or method claim as an application for which a drawing is not necessary for an understanding of the invention under 35 U.S.C. 113 (first sentence).

Thus, pursuant to § 601.01(f), a drawing is not considered essential for a filing date. The instant application is entitled to a filing date without drawings present in the application.

Accordingly, the Office should have granted the application a filing date and mailed a Notice of Omitted Items instead of a Notice of Incomplete Nonprovisional Application. As stated in MPEP 601.01(g) under the section entitled, "Application Entitled to a Filing Date," applicant may submit an amendment to include the inadvertently omitted portion of the drawing(s) pursuant to 37 CFR 1.57(a):

> [i]f an application was filed on or after September 21, 2004, and contains a claim under 37 CFR 1.55 for priority of a prior-filed foreign application, or a claim under 37 CFR 1.78 for the benefit of a prior-filed provisional, nonprovisional, or international application that was present on the filing date of the application, and the omitted portion of the drawing(s) was inadvertently omitted from the application and is completely contained in the prior-filed application[.]

To the extent the instant petition requests a filing date of January 18, 2011 with no drawings present in the application on filing, the petition is **GRANTED**.

Given the basis for granting this petition, the $400 petition fee has been refunded to petitioner's deposit account.

Pursuant to this decision, the application will be referred to Office of Patent Application Processing for:

- **correction of the filing date to January 18, 2011**;
- **for indication in Office records, as appropriate, that "0" sheets of drawings were present on filing** and
- **for issuance of a filing receipt.**

Telephone inquiries concerning this matter may be directed to Petitions Attorney Cliff Congo at (571) 272-3207.

Chris Bottorff
Petitions Examiner
Office of Petitions

UNITED STATES PATENT AND TRADEMARK OFFICE

Commissioner for Patents
United States Patent and Trademark Office
P.O. Box 1450
Alexandria, VA 22313-1450
www.uspto.gov

SJM/AFD-WILEY
Legal Department
One St. Jude Medical Drive
St. Paul MN 55117-9913

APR 18 2011

| | | |
|---|---|---|
| In re Application of: Pachon Mateos et al. | : | DECISION ON PETITION TO MAKE SPECIAL FOR NEW APPLICATION UNDER 37 C.F.R. § 1.102 & M.P.E.P. § 708.02 |
| Application No.: 13/008644 | : | |
| Filed: January 18, 2011 | : | |
| Title: APPARATUS AND METHODS FOR ARRHYTHMIA TREATMENT BASED ON SPECTRAL MAPPING DURING SINUS RHYTHM | : | |

This is a decision on the petition filed on January 18, 2011 to make the above-identified application special for accelerated examination procedure under 37 C.F.R. § 1.102(d).

The petition to make the application special is **DISMISSED**.

REGULATION AND PRACTICE

A grantable petition to make special under 37 C.F.R. § 1.102(d) and pursuant to the "Change to Practice for Petitions in Patent Applications to Make Special and for Accelerated Examination" published in the Federal Register on June 26, 2006 (71 Fed. Reg. 36323), must satisfy the following conditions:

I. Conditions Regarding the Application:

1. the application must be a non-reissue utility or design application filed under 37 CFR 1.111(a);

2. the application, the petition and the required fees must be filed electronically using the USPTO's electronic filing system (EFS), or EFS-web; if not filed electronically, a statement asserting that EFS and EFS-web were not available during the normal business hours.

3. at the time of filing, the application must be complete under 37 CFR 1.51 and in condition for examination;

4. the application must contain three or fewer independent claims and twenty or fewer total claims and the claims must be directed to a single invention.

II. Conditions Regarding the Petition:

The petition must:

1. be filed with the application;

2. include a statement that applicant agrees not to separately argue the patentability of any independent claim during any appeal in the application;

3. include a statement that applicant agrees to make an election without traverse in a telephone interview.

4. include a statement that applicant agrees to conduct such an interview when requested by the examiner.

5. include a statement, made based on a good faith belief, that a preexamination search in compliance with the following requirements, was conducted, including an identification of the field of search by United States class and subclass, where applicable, and for database searches, the search logic or chemical structure or sequence used as a query, the name of the file(s) searched and the database service, and the date of the search.

The preexamination search must:

5.1 involve U.S. patents and patent application publications, foreign patent documents, and non-patent literature, unless the applicant can justify with reasonable certainty that no references more pertinent than those already identified are likely to be found in the eliminated sources and includes such a justification with this statement;

5.2. be directed to the claimed invention and encompass all of the features of the claims, giving the claims the broadest reasonable interpretation;

5.3. encompass the disclosed features that may be claimed.

6. must provide in support of the petition an accelerated examination support document. An accelerated examination support document must include:

6.1. an information disclosure statement (IDS) in compliance with 37 CFR 1.98 citing each reference deemed most closely related to the subject matter of each of the claims;

6.2. an identification of all the limitations in the claims that are disclosed by the reference specifying where the limitation is disclosed in the cited reference;

6.3. a detailed explanation of how each of the claims are patentable over the references cited with particularity required by 37 CFR 1.111(b) and (c);

6.4. a concise statement of the utility of the invention as defined in each of the independent claims (unless the application is a design application);

6.5. a showing of where each limitation of the claims finds support under 35 U.S.C. 112, first paragraph, in the written description of the specification. If applicable, the showing must also identify: (1) each means- (or step) plus-function claim element that invokes consideration under 35 U.S.C. 112, sixth paragraph; and (2) the structure, material, or acts in the specification that corresponds to each means- (or step) plus-function claim element that invokes consideration under 35 U.S.C. 112, sixth paragraph; if the application claims the benefit of one or more applications under title 35, United States Code, the showing must also include where each limitation of the claims finds support under 35 U.S.C. 112, first paragraph, in each such application in which such supports exists;

6.6. an identification of any cited references that may be disqualified under 35 U.S.C. 103(c).

## REVIEW OF FACTS

The conditions I:1-4, II: 1-5, 5.3, 6, 6.1, and 6.4 above are considered to have been met. However, the petition fails to comply with conditions II : 5.1, 5.2, 6.2, 6.3, 6.5, and 6.6 above. Therefore, the petition fails to meet the required conditions to be accorded special status under the accelerated examination procedure.

**Discussion**

When referring to "the petition" hereinbelow, the received papers under consideration include the PTO/SB/28 form, the "pre-examination search document" including pages 1-16; the "accelerated examination support document" comprising pages 1-26, and an Information Disclosure Statement including form PTO/SB/08A.

Regarding the requirements of section II element 5.1 and 5.2 outlined above, it appears the search outlined in the petition omitted a critical search area by not searching in class 606 subclasses 32 and 41 and class 600 subclass 374. While these class/subclasses are listed in the pre-examination search document, it is not clear a review of all the patents were made in these class/subclasses as it is not clear whether the dates included below the search strategy is intended to include the class/subclass search listed or if the search was only done with text as noted in L1. Clarification is requested.

Regarding the requirements of section II element 6.2 outlined above, the petition fails to identify all of the limitations in the application claims that are disclosed in each of the reference(s) and where the limitation is disclosed in each of the cited reference. As stated in the policy published in the Federal Register on June 26, 2006 (71 Fed. Reg. 36323), for each reference cited, the examination support document must include an identification of all the limitations in the claims that are disclosed by the reference specifying where the limitation is disclosed in the cited reference. The policy statement does not caveat "the independent claims", nor does it allow for grouping and general discussions. A grantable petition must delineate every limitation of every claim and identify where the equivalent limitation is disclosed in each piece of prior art cited on the IDS. As is published on www.uspto.gov/web/patents/accelerated/ in "Guidelines for Applicants under the new accelerated examination procedures"):

> *For each reference cited, the accelerated examination support document must include an identification of all the limitations in the claims that are disclosed by the reference specifying where the limitation is disclosed in the cited reference. Applicants should specify where in each of the cited references the particular claim limitations are found. This process is intended to be analogous to the analysis an examiner uses when locating a relevant prior art reference and then determining whether the reference contains the claimed limitation. For each claimed limitation, the examiner would consider the disclosure of the reference and all reasonable portions in the reference where the limitation is shown. When preparing an Office Action, the examiner would correlate the limitation to the portion of reference which best characterizes the limitation. This part of the AESD is not intended to be an exhaustive listing of every conceivable subjective interpretation of how a claim limitation may read on the reference. Applicants should point out what are considered to be the relevant representations of the limitation in the reference. A limitation may be found in more than one portion of the reference and should be pointed out, yet the intention is not to have applicants point out every*

*conceivable interpretation. The USPTO will adopt a rule of reason when evaluating this portion of the AESD. Unless the representation is so deficient that it would materially effect examination of the application (e.g., numerous instances where the limitations are not shown where applicant states they are), the representation will be deemed to be sufficient for this part of the AESD.*

In the instant petition, petitioner does not address each limitation and where it is (or state that it is not) found in each closest prior art since the Narayan reference only refers to reference numerals and not the portions of the specification that describe the limitation.

Similarly, with respect to the requirements of section II element 6.3 outlined above, the petition fails to provide a detailed explanation of how each of the claims are patentable over (each of) the reference(s) with particularity required by 37 CFR 1.111(b) and (c). Petitioners should be specific in their explanation and include the identification of specific claim limitations that support their position, where appropriate. Petitioners must distinguish each claim from each piece of prior art cited. General statements that the claims are neither anticipated nor rendered obvious by the cited references or that the references are not properly combinable will not be acceptable. The Office cannot infer or guess what petitioner believes the differences between the claims and the teachings of the prior art to be. Petitioner's statements must also be consistent and must be related to the claim language. In the instant petition, patentability of each claim is not clearly set forth. Indicating that a dependent claim is allowable because the independent claim is allowable is not sufficient as this does not provide guidance to the examiner as to whether the limitations could provide patentability should the examiner find the independent claims unpatentable. Not all the claims are addressed in regard to 35 U.S.C. 103.

Regarding the requirements of section II element 6.5 outlined above, the requirements of this section are not met. A grantable petition requires petitioner to provide a showing of where each limitation of the claims finds support under 35 U.S.C. 112, first paragraph, in the written description of the specification. If applicable, the showing must also identify: (1) each means- (or step) plus-function claim element that invokes consideration under 35 U.S.C. 112, sixth paragraph; and (2) the structure, material, or acts in the specification that corresponds to each means- (or step) plus-function claim element that invokes consideration under 35 U.S.C. 112, sixth paragraph; if the application claims the benefit of one or more applications under title 35, United States Code, the showing must also include where each limitation of the claims finds support under 35 U.S.C. 112, first paragraph, in each such application in which such supports exists. In the instant petition, the structure, material or acts in the specification that correspond to each means-plus-function claim element has not be identified. The reference to paragraphs is not sufficient for this and does not clearly identify the specific structure, material or acts.

Finally, regarding the requirements of section II element 6.6, the petition does not provide an identification of any cited references that may be disqualified under 35 U.S.C. 103(c). If there are no such references, a statement to such must be made.

DECISION

For the above-stated reasons, the petition is **dismissed**. The application will therefore be taken up by the examiner for action in its regular turn.

Petitioner is given a single opportunity to perfect the petition. Any request for reconsideration of this decision must be submitted within 1 (one) month or 30 (thirty) days, whichever is longer, (no extension of time under 37 CFR 1.136(a)) from the date of this decision in order to be considered timely. Any request for reconsideration must address all of the deficiencies indicated above.

Petitioner is reminded that, upon granting of the special status of the application on request for reconsideration, the application will be processed expeditiously. However, due to the dismissal of the instant petition, examination may not be completed within twelve months of the filing date of the application.

Any inquiry regarding this decision should be directed to Linda J. Sholl, TC 3700 Special Programs Examiner, at (571) 272-4391.

/Linda J. Sholl/
Linda J. Sholl
Special Programs Examiner
Technology Center 3700

UNITED STATES PATENT AND TRADEMARK OFFICE

Commissioner for Patents
United States Patent and Trademark Office
P.O. Box 1450
Alexandria, VA 22313-1450
www.usplo.gov

MAY 2 4 2011

SJM/AFD-WILEY
Legal Department
One St. Jude Medical Drive
St. Paul MN 55117-9913

| | | |
|---|---|---|
| In re Application of: Pachon Mateos et al. | : | |
| Application No.: 13/008644 | : | DECISION ON PETITION TO MAKE SPECIAL FOR NEW APPLICATION UNDER 37 C.F.R. § 1.102 & M.P.E.P. § 708.02 |
| Filed: January 18, 2011 | : | |
| Title: APPARATUS AND METHODS FOR ARRHYTHMIA TREATMENT BASED ON SPECTRAL MAPPING DURING SINUS RHYTHM | : | |

This is a decision on the renewed petition filed on May 18, 2011 to make the above-identified application special for accelerated examination procedure under 37 C.F.R. § 1.102(d).

The petition to make the application special is GRANTED.

The application is eligible for accelerated examination and the petition complies with the conditions for granting the application special status pursuant to the "Change to Practice for Petitions in Patent Applications to Make Special and for Accelerated Examination" published June 26, 2006, in the Federal Register. (71 Fed. Reg. 36323).

The prosecution of the instant application will be conducted expeditiously according to the following guidelines.

1. The application will be docketed to an examiner and taken up for action within two weeks of the date of this decision.

2. Restriction Practice:
   If the examiner determines that the claims are not directed to a single invention, a telephone request to elect one single invention will be made pursuant to MPEP 812.01. As a prerequisite to the grant of this petition, the applicant has agreed to make an oral election, by telephone, without traverse. If the applicant refuses to make an election without traverse, or the examiner cannot reach the applicant after a reasonable effort, the examiner will treat the first claimed invention (invention defined by claim 1) as having being constructively elected without traverse for examination.

3. Office action:
If it is determined that, after appropriate consultation, there is a potential rejection or any other issue to be addressed, the examiner will telephone the applicant and arrange an interview to discuss and resolve the issue. An Office action, other than a Notice of Allowance and Fee(s) Due (Notice of Allowance), will not be issued unless either: 1) an interview was conducted but did not result in agreed to action that places the application in condition for allowance, or, 2) a determination is made that an interview would be unlikely to result in the application being placed in condition for allowance, and 3) an internal conference has been held to review any rejection of any claim.

4. Time for Reply:
An Office action other than a Notice of Allowance or a final Office action will set a shortened statutory period of one month or thirty days, whichever is longer, for reply with no extension of time available under 37 CFR 1.136(a). Failure to timely file a reply within this non-extendible period for reply will result in the abandonment of the application.

5. Reply by Applicant:
A timely reply to an Office action other than the Notice of Allowance must be submitted electronically via EFS or EFS-web and limited to addressing the rejections, objections and requirement made. Any amendment that attempts to: 1) add claims which would result in more than three pending independent claims or more than twenty pending total claims; 2) present claims not encompassed by the pre-examination search or an updated accelerated examination support document; or 3) present claims that are directed a non-elected invention or an invention other than that previously claimed and examined in the application, will be treated as not fully responsive and will not be entered.

For any amendment to the claims (including any new claim) that is not encompassed by the accelerated examination support document, applicant must provide an updated accelerated examination support document that encompasses the amended or new claims at the time of filing of the amendment.

To proceed expeditiously with the examination, it is recommended that a reply with amendments made to any claim or with any new claim being added be accompanied by an updated accelerated examination support document or a statement explaining how the amended or new claim is supported by the original accelerated examination support document.

6. Information Disclosure Statement (IDS):
Any IDS filed during prosecution must be submitted electronically via EFS or EFS-web, accompanied by an updated accelerated examination support document, and be in compliance with 37 CFR 1.97 and 1.98.

7. Post-Allowance Processing:
   To expedite processing of the allowed application into a patent, the applicant must: 1) pay the required fees within one month of the date of the Notice of Allowance, and 2) not file any post allowance papers not required by the Office. In no event may the issue fee be paid and accepted later than three months from the date of the Notice of Allowance.

8. After-Final and Appeal Procedures:
   To expedite prosecution, after receiving the final Office action, applicant must: 1) promptly file a notice of appeal, an appeal brief and appeal fees; and 2) not request a pre-appeal brief conference.

   Any amendment, affidavit or other evidence filed after final Office action must comply with applicable rules and the requirements outlined in numbered paragraphs 5 and 6 above.

   On appeal, the application will proceed according to normal appeal procedures. After appeal, the application will again be treated special.

9. Proceedings Outside the Normal Examination Process:
   If the application becomes involved in a proceeding that is outside the normal examination process (e.g., a secrecy order, national security review, interference proceeding, petitions under 37 CFR 1.181, 182 or 183), the application will be treated special before and after such proceeding.

10. Final Disposition:
    The twelve month goal of this accelerated examination procedure ends with a final disposition. The mailing of a final Office action, a Notice of Allowance, the filing of a Notice of Appeal, or the filing of a Request for Continued Examination (RCE) is the final disposition.

If, during prosecution, a paper is not filed electronically using EFS-web, a reply is filed but is not fully responsive, the application is involved in an appeal, or a proceeding outside normal examination process, the application will still be examined expeditiously, however, the final disposition may occur more than twelve months from the filing of the application.

Any inquiry regarding this decision should be directed to Linda Sholl at (571) 272-4391

/Linda Sholl/
Linda Sholl
Special Programs Examiner
Technology Center 3700

UNITED STATES PATENT AND TRADEMARK OFFICE

Commissioner for Patents
United States Patent and Trademark Office
P.O. Box 1450
Alexandria, VA 22313-1450
www.uspto.gov

CHEVRON CORPORATION
PO BOX 6006
SAN RAMON CA 94583-0806

MAILED

APR 08 2011

OFFICE OF PETITIONS

In re Application of :
Timken, et al. :
Application No. 13/008,662 : ON PETITION
Deposited: January 18, 2011 :
Attorney Docket No. T-6575-D2 :

This is in response to the "RESPONSE TO NOTICE OF INCOMPLETE NONPROVISIONAL APPLICATION", filed February 18, 2011, which is being treated as a petition under 37 CFR 1.53(e)(2).

Application papers in the above-identified application were deposited on January 18, 2011. However, on February 2, 2011, the Office of Patent Application Processing mailed applicants a "Notice of Incomplete Nonprovisional Application," notifying applicants that the application papers had not been accorded a filing date because the application was deposited without drawings. Applicants request that the application be accorded the filing date of January 18, 2011, based on an express incorporation by reference statement present in the specification on filing.

Petitioner's arguments and evidence have been considered. However, a review of the application confirms that, as filed, the application contained at least one process claim. MPEP 601.01(f) provides that:

> It has been USPTO practice to treat an application that contains at least one process or method claim as an application for which a drawing is not necessary for an understanding of the invention under 35 U.S.C. 113 (first sentence).

Thus, pursuant to § 601.01(f), a drawing is not considered essential for a filing date. The instant application is entitled to a filing date without drawings present in the application.

Accordingly, the Office should have granted the application a filing date and mailed a Notice of Omitted Items instead of a Notice of Incomplete Nonprovisional Application. As stated in MPEP 601.01(g) under the section entitled, "Application Entitled to a Filing Date," applicant may submit an amendment to include the inadvertently omitted portion of the drawing(s) pursuant to 37 CFR 1.57(a):

> [i]f an application was filed on or after September 21, 2004, and contains a claim under 37 CFR 1.55 for priority of a prior-filed foreign application, or a claim under 37 CFR 1.78 for the benefit of a prior-filed provisional, nonprovisional, or international application that was present on the filing date of the application, and the omitted portion of the drawing(s) was inadvertently omitted from the application and is completely contained in the prior-filed application[.]

To the extent the instant petition requests a filing date of January 18, 2011 with no drawings present in the application on filing, the petition is **GRANTED**.

Given the basis for granting this petition, the $400 petition fee has been refunded to petitioner's deposit account.

Pursuant to this decision, the application will be referred to Office of Patent Application Processing for:

- **correction of the filing date to January 18, 2011**;
- **for indication in Office records, as appropriate, that "0" sheets of drawings were present on filing** and
- **for issuance of a filing receipt.**

Telephone inquiries concerning this matter may be directed to Petitions Attorney Cliff Congo at (571) 272-3207.

Chris Bottorff
Petitions Examiner
Office of Petitions

UNITED STATES PATENT AND TRADEMARK OFFICE

UNITED STATES DEPARTMENT OF COMMERCE
United States Patent and Trademark Office
Address: COMMISSIONER FOR PATENTS
P.O. Box 1450
Alexandria, Virginia 22313-1450
www.uspto.gov

| APPLICATION NO. | FILING DATE | FIRST NAMED INVENTOR | ATTORNEY DOCKET NO. | CONFIRMATION NO. |
|---|---|---|---|---|
| 13/008,678 | 01/18/2011 | Matthew Allard | 58845-392671 (NW-051) | 9234 |

23370 7590 02/04/2011
JOHN S. PRATT, ESQ
KILPATRICK TOWNSEND & STOCKTON LLP
1100 PEACHTREE STREET
SUITE 2800
ATLANTA, GA 30309

| EXAMINER | |
|---|---|
| ART UNIT | PAPER NUMBER |
| 2629 | |

| NOTIFICATION DATE | DELIVERY MODE |
|---|---|
| 02/04/2011 | ELECTRONIC |

**Please find below and/or attached an Office communication concerning this application or proceeding.**

The time period for reply, if any, is set in the attached communication.

Notice of the Office communication was sent electronically on above-indicated "Notification Date" to the following e-mail address(es):

ipefiling@kilpatricktownsend.com
jlhice@kilpatrick.foundationip.com

UNITED STATES PATENT AND TRADEMARK OFFICE

Commissioner for Patents
United States Patent and Trademark Office
P.O. Box 1450
Alexandria, VA 22313-1450
www.uspto.gov

JOHN S. PRATT, ESQ
KILPATRICK TOWNSEND & STOCKTON LLP
1100 PEACHTREE STREET
SUITE 2800
ATLANTA GA 30309

| | |
|---|---|
| In re Application of:<br>Allard, Matthew et al.<br>Serial No.: 13/008678<br>Filed: January 18, 2011<br>Docket: 58845-392671 (NW-051)<br>Title: MOUNTING MEMBERS FOR TOUCH SENSITIVE DESPLAYS | DECISION ON PETITION TO MAKE SPECIAL FOR NEW APPLICATION UNDER 37 C.F.R. § 1.102 & M.P.E.P. § 708.02 |

This is a decision on the petition filed on January 18, 2011 requesting to make the above-identified application special for accelerated examination procedure under 37 C.F.R. § 1.102(d).

The petition to make the application special is GRANTED.

The application is eligible for accelerated examination and the petition complies with the conditions for granting the application special status pursuant to the "Change to Practice for Petitions in Patent Applications to Make Special and for Accelerated Examination" published June 26, 2006, in the Federal Register. (71 Fed. Reg. 36323).

The prosecution of the instant application will be conducted expeditiously according to the following guidelines.

1. The application will be docketed to an examiner and taken up for action within two weeks of the date of this decision.

2. Restriction Practice:
   If the examiner determines that the claims are not directed to a single invention, a telephone request to elect one single invention will be made pursuant to MPEP 812.01. As a prerequisite to the grant of this petition, the applicant has agreed to make an oral election, by telephone, without traverse. If the applicant refuses to make an election without traverse, or the examiner cannot reach the applicant after a reasonable effort, the examiner will treat the first claimed invention (invention defined by claim 1) as having being constructively elected without traverse for examination.

3. Office action:

If it is determined that, after appropriate consultation, there is a potential rejection or any other issue to be addressed, the examiner will telephone the applicant and arrange an interview to discuss and resolve the issue. An Office action, other than a Notice of Allowance and Fee(s) Due (Notice of Allowance), will not be issued unless either: 1) an interview was conducted but did not result in agreed to action that places the application in condition for allowance, or, 2) a determination is made that an interview would be unlikely to result in the application being placed in condition for allowance, and 3) an internal conference has been held to review any rejection of any claim.

4. Time for Reply:
An Office action other than a Notice of Allowance or a final Office action will set a shortened statutory period of one month or thirty days, whichever is longer, for reply with no extension of time available under 37 CFR 1.136(a). Failure to timely file a reply within this non-extendible period for reply will result in the abandonment of the application.

5. Reply by Applicant:
A timely reply to an Office action other than the Notice of Allowance must be submitted electronically via EFS or EFS-web and limited to addressing the rejections, objections and requirement made. Any amendment that attempts to: 1) add claims which would result in more than three pending independent claims or more than twenty pending total claims; 2) present claims not encompassed by the pre-examination search or an updated accelerated examination support document; or 3) present claims that are directed a non-elected invention or an invention other than that previously claimed and examined in the application, will be treated as not fully responsive and will not be entered.

For any amendment to the claims (including any new claim) that is not encompassed by the accelerated examination support document, applicant must provide an updated accelerated examination support document that encompasses the amended or new claims at the time of filing of the amendment.

To proceed expeditiously with the examination, it is recommended that a reply with amendments made to any claim or with any new claim being added be accompanied by an updated accelerated examination support document or a statement explaining how the amended or new claim is supported by the original accelerated examination support document.

6. Information Disclosure Statement (IDS):
Any IDS filed during prosecution must be submitted electronically via EFS or EFS-web, accompanied by an updated accelerated examination support document, and be in compliance with 37 CFR 1.97 and 1.98.

7. Post-Allowance Processing:
To expedite processing of the allowed application into a patent, the applicant must: 1) pay the required fees within one month of the date of the Notice of Allowance, and 2) not

file any post allowance papers not required by the Office. In no event may the issue fee be paid and accepted later than three months from the date of the Notice of Allowance.

8. After-Final and Appeal Procedures:
To expedite prosecution, after receiving the final Office action, applicant must: 1) promptly file a notice of appeal, an appeal brief and appeal fees; and 2) not request a pre-appeal brief conference.

   Any amendment, affidavit or other evidence filed after final Office action must comply with applicable rules and the requirements outlined in numbered paragraphs 5 and 6 above.

   On appeal, the application will proceed according to normal appeal procedures. After appeal, the application will again be treated special.

9. Proceedings Outside the Normal Examination Process:
If the application becomes involved in a proceeding that is outside the normal examination process (e.g., a secrecy order, national security review, interference proceeding, petitions under 37 CFR 1.181, 182 or 183), the application will be treated special before and after such proceeding.

10. Final Disposition:
The twelve month goal of this accelerated examination procedure ends with a final disposition. The mailing of a final Office action, a Notice of Allowance, the filing of a Notice of Appeal, or the filing of a Request for Continued Examination (RCE) is the final disposition.

If, during prosecution, a paper is not filed electronically using EFS-web, a reply is filed but is not fully responsive, the application is involved in an appeal, or a proceeding outside normal examination process, the application will still be examined expeditiously, however, the final disposition may occur more than twelve months from the filing of the application.

Any inquiry regarding this decision should be directed to John Peng, Quality Assurance Specialist, at (571) 272-7272.

/John Peng/

Quality Assurance Specialist
Technology Center 2600

UNITED STATES PATENT AND TRADEMARK OFFICE

UNITED STATES DEPARTMENT OF COMMERCE
United States Patent and Trademark Office
Address: COMMISSIONER FOR PATENTS
P.O. Box 1450
Alexandria, Virginia 22313-1450
www.uspto.gov

| APPLICATION NO. | FILING DATE | FIRST NAMED INVENTOR | ATTORNEY DOCKET NO. | CONFIRMATION NO. |
|---|---|---|---|---|
| 13/008,693 | 01/18/2011 | Fumikazu Matsukawa | 8073P1108 | 9257 |

7590 12/28/2011

BLAKELY SOKOLOFF TAYLOR & ZAFMAN LLP
1279 OAKMEAD PARKWAY
SUNNYVALE, CA 94085-4040

| EXAMINER | |
|---|---|
| KOONTZ, TAMMY J | |
| ART UNIT | PAPER NUMBER |
| 3974 | |
| MAIL DATE | DELIVERY MODE |
| 12/28/2011 | PAPER |

## DECISION GRANTING PETITION UNDER 37 CFR 1.138(d)

*The declaration of express abandonment is recognized*

This is in response to the petition under 37 CFR 1.138(d), requesting for a refund of any previously paid search fee and excess claims fee in the above-identified application.

The petition is granted.

The express abandonment is recognized. Any previously paid search fee and excess claims fee are hereby refunded.

Telephone inquiries should be directed to the Office of Data Management at (571) 272-4200.

Betty Powell

Patent Publication Branch
Office of Data Management

UNITED STATES PATENT AND TRADEMARK OFFICE

UNITED STATES DEPARTMENT OF COMMERCE
United States Patent and Trademark Office
Address: COMMISSIONER FOR PATENTS
P.O. Box 1450
Alexandria, Virginia 22313-1450
www.uspto.gov

| APPLICATION NO. | FILING DATE | FIRST NAMED INVENTOR | ATTORNEY DOCKET NO. | CONFIRMATION NO. |
|---|---|---|---|---|
| 13/008,703 | 01/18/2011 | Shinya Hayashiyama | 8073P1107 | 9273 |

7590 12/28/2011

BLAKELY SOKOLOFF TAYLOR & ZAFMAN LLP
1279 OAKMEAD PARKWAY
SUNNYVALE, CA 94085-4040

| EXAMINER |
|---|
| THOMPSON, TIMOTHY J |

| ART UNIT | PAPER NUMBER |
|---|---|
| 2835 | |

| MAIL DATE | DELIVERY MODE |
|---|---|
| 12/28/2011 | PAPER |

## DECISION GRANTING PETITION UNDER 37 CFR 1.138(d)

*The declaration of express abandonment is recognized*

This is in response to the petition under 37 CFR 1.138(d), requesting for a refund of any previously paid search fee and excess claims fee in the above-identified application.

The petition is granted.

The express abandonment is recognized. Any previously paid search fee and excess claims fee are hereby refunded.

Telephone inquiries should be directed to the Office of Data Management at (571) 272-4200.

Betty Powell

Patent Publication Branch
Office of Data Management

UNITED STATES PATENT AND TRADEMARK OFFICE

Commissioner for Patents
United States Patent and Trademark Office
P.O. Box 1450
Alexandria, VA 22313-1450
www.uspto.gov

LAW OFFICES OF ALBERT WAI-KIT CHAN, PLLC
141-07 20TH AVENUE
WORLD PLAZA, SUITE 604
WHITESTONE, NY 11357

MAILED
DEC 13 2011
OFFICE OF PETITIONS

In re Application of Tam et al. :
Application No. 13/008,737 :
Filing Date: January 18, 2011 : Decision on Request
Attorney Docket No. 1449-A-US :
Pub. No. US 2011/0177179 A1 :
Pub. Date: July 21, 2011 :

This is a decision on the "Request for a Corrected Publication Under 37 CFR 1.221(b)" filed September 21, 2011.

The request is **dismissed**.

Applicants request the application be republished because of the alleged mistake in the patent application publication identified in the request.

37 C.F.R. § 1.221(b) states,

> [Relief under 37 C.F.R. § 1.221 is warranted] only when the Office makes a material mistake which is apparent from Office records.... Any request for corrected publication or revised patent application publication other than provided in paragraph (a) of this section must be filed within two months from the date of the patent application publication. This period is not extendable.

A mistake is only a "material" mistake if the mistake affects the public's ability to appreciate the technical disclosure of the patent application publication, determine the scope of the patent application publication, or determine the scope of the provisional rights that an applicant may seek to enforce upon issuance of a patent.[1]

The mistakes identified in the instant request are not material Office mistakes as required under 37 C.F.R. § 1.221(b). Specifically, the mistakes do not not affect the public's ability to

[1] *See* Changes to Implement Eighteen-Month Publication of Patent Applications; Final Rule, 65 Fed. Reg. 57023, 57038 (Sept. 20, 2000), 1239 Off. Gaz. Pat. Office 63, 75 (Oct. 10, 2000). *See also* Section 1130 of the Manual of Patent Examining Procedure (8th ed., Rev. 8, July 2010).

appreciate the technical disclosure of the patent application publication, determine the scope of the patent application publication, or determine the scope of the provisional rights that an applicant may seek to enforce upon issuance of a patent. *See* MPEP § 1130(B). Therefore, relief under 37 C.F.R. § 1.221(b) is unwarranted and the request is dismissed.

The request is accompanied by a payment of a $300 publication fee and a $130 processing fee. However, neither of these fees is required for a request under 37 C.F.R. § 1.221(b) and these fees have been refunded to Deposit Account No. 50-1891.

Applicant are advised that a "request for republication of an application previously published" may be filed under 37 C.F.R. § 1.221(a). The request must include a copy of the application, which complies with the Office's electronic filing system requirements, the publication fee set forth in 37 C.F.R. § 1.18(d), and the required processing fee set forth in 37 C.F.R. § 1.17(i).

If the request for republication does not comply with the electronic filing system requirements, the republication will not take place and the publication fee set forth in 37 C.F.R. § 1.18(d) will be refunded. However, the processing fee will be retained.

Guidance for filing a request for a Pre-Grant Publication, such as a request for republication, may be found at the links below:

http://www.uspto.gov/patents/process/file/efs/guidance/index.jsp

http://www.uspto.gov/ebc/portal/efs/pgpub_quickstart.pdf

Applicants may wish to note the following language from the Office's EFS-Web Filing Documents for Pre-Grant Publication Quick-Start Guide located at the second link cited above:

> A copy of the application including the fillable application data sheet must be submitted via EFS-Web, as a "Pre-Grant Publication under 37 CFR 1.211-1.221....
>
> If the e-Filer does not choose "Pre-Grant Publication under 37 CFR 1.211 to 1.221" and instead chooses "Documents/Fees for an existing application", the submission will not be put into the queue for electronic application review and publication by the Office. The submission will be entered into the image file wrapper as a document and it will be rejected when it is reviewed, as being improperly filed. The e-Filer will then be required to resubmit the application using the proper procedure. In addition, any processing fees that have been paid will be retained by USPTO.

Any request for reconsideration of the instant decision should be addressed as follows:

By mail to: Mail Stop PGPUB
Commissioner for Patents
P.O. Box 1450
Alexandria, Va. 22313-1450

Telephone inquiries regarding this communication should be directed to Senior Petitions Attorney Steven Brantley at (571) 272-3203.

Christopher Bottorff
Petitions Examiner
Office of Petitions

**Doc Code: PPH.PCT.652**
**Document Description: Petition to make special under PCT-Patent Pros Hwy**

PTO/SB/20PCT-KR (06-10)
Approved for use through 01/31/2012. OMB 0651-0058
U.S. Patent and Trademark Office; U. S. DEPARTMENT OF COMMERCE
Under the Paperwork Reduction Act of 1995, no persons are required to respond to a collection of information unless it displays a valid OMB control number.

# REQUEST FOR PARTICIPATION IN THE PATENT COOPERATION TREATY - PATENT PROSECUTION HIGHWAY (PCT-PPH) PILOT PROGRAM BETWEEN THE KOREAN INTELLECTUAL PROPERTY OFFICE (KIPO) AND THE USPTO

| | | | |
|---|---|---|---|
| Application No: | 13/008,753 | Filing date: | January 18, 2011 |
| First Named Inventor: | Paul H. Robb | | |
| Title of the Invention: | ASSET INVESTMENT TOOL | | |

**THIS REQUEST FOR PARTICIPATION IN THE PCT-PPH PILOT PROGRAM ALONG WITH THE REQUIRED DOCUMENTS MUST BE SUBMITTED VIA EFS-WEB. INFORMATION REGARDING EFS-WEB IS AVAILABLE AT HTTP://WWW.USPTO.GOV/EBC/EFS_HELP.HTML**

**APPLICANT HEREBY REQUESTS PARTICIPATION IN THE PCT-PPH PROGRAM AND PETITIONS TO MAKE THE ABOVE-IDENTIFIED APPLICATION SPECIAL UNDER THE PCT-PPH PROGRAM.**

The above-identified application is (1) a national stage entry of the corresponding PCT application, or (2) a national stage entry of another PCT application which claims priority to the corresponding PCT application, or (3) a national application that claims domestic/ foreign priority to the corresponding PCT application, or (4) a national application which forms the basis for the priority claim in the corresponding PCT application, or (5) a continuing application of a U.S. application that satisfies one of (1) to (4) above, or (6) a U.S. application that claims domestic benefit to a U.S. provisional application which forms the basis for the priority claim in the corresponding PCT application.

**The corresponding PCT application number(s) is/are:** PCT/US2011/021743

**The international filing date of the corresponding PCT application(s) is/are:** January 19, 2011

**I. List of Required Documents:**

a. **A copy of the latest international work product (WO/ISA, WO/IPEA, or IPER) in the above–identified corresponding PCT application(s)**

☑ Is attached.

☐ Is not attached because the document is already in the U.S. application.

b. **A copy of all claims which were indicated as having novelty, inventive step and industrial applicability in the above-identified corresponding PCT application(s).**

☑ Is attached.

☐ Is not attached because the document is already in the U.S. application.

c. **English translations of the documents in a. and b. above are attached (if the documents are not in the English language). A statement that the English translation is accurate is attached for the document in b. above.**



This collection of information is required by 35 U.S.C. 119, 37 CFR 1.55, and 37 CFR 1.102(d). The information is required to obtain or retain a benefit by the public, which is to file (and by the USPTO to process) an application. Confidentiality is governed by 35 U.S.C. 122 and 37 CFR 1.11 and 1.14. This collection is estimated to take 2 hours to complete, including gathering, preparing, and submitting the completed application form to the USPTO. Time will vary depending upon the individual case. Any comments on the amount of time you require to complete this form and/or suggestions for reducing this burden should be sent to the Chief Information Officer, U.S. Patent and Trademark Office, U.S. Department of Commerce, P.O. Box 1450, Alexandria, VA 22313-1450. DO NOT SEND FEES OR COMPLETED FORMS TO THIS ADDRESS.

PTO/SB/20PCT-KR (06-10)
Approved for use through 01/31/2012. OMB 0651-0058
U.S.Patent and Trademark Office; U.S. DEPARTMENT OF COMMERCE
Under the Paperwork Reduction Act of 1995, no persons are required to respond to a collection of information unless it displays a valid OMB control number.

# REQUEST FOR PARTICIPATION IN THE PCT-PPH PILOT PROGRAM BETWEEN THE KIPO AND THE USPTO

(continued)

| | |
|---|---|
| Application No.: | 13/008,753 |
| First Named Inventor: | Paul H. Robb |

d. **(1) An information disclosure statement listing the documents cited in the international work products (ISR, WO/ISA, WO/IPEA, IPER) of the corresponding PCT application.**

☑ Is attached

☐ Has already been filed in the above-identified U.S. application on _____

**(2) Copies of all documents (except) for U.S. patents or U.S. patent application publications)**

☑ Are attached.

☐ Have already been filed in the above-identified U.S. application on _____

**II. Claims Correspondence Table:**

| Claims in US Application | Patentable Claims in the corresponding PCT Application | Explanation regarding the correspondence |
|---|---|---|
| 1-21 | 1-21 | The Claims in the US Application and PCT Application are exactly the same. |
| | | |
| | | |
| | | |
| | | |
| | | |
| | | |
| | | |
| | | |
| | | |
| | | |
| | | |
| | | |
| | | |
| | | |
| | | |
| | | |
| | | |

**III. All the claims in the US application sufficiently correspond to the patentable claims in the corresponding PCT application.**

| | |
|---|---|
| Signature May Mowzoon | Date October 10, 2011 |
| Name (Print/Typed) May M. Mowzoon | Registration Number 57,996 |

UNITED STATES PATENT AND TRADEMARK OFFICE

Commissioner for Patents
United States Patent and Trademark Office
P.O. Box 1450
Alexandria, VA 22313-1450
www.uspto.gov

**QUARLES & BRADY LLP**
**ONE SOUTH CHURCH AVENUE, SUITE 1700**
**TUCSON AZ 85701-1621**

**MAILED**

JAN 24 2012

**OFFICE OF PETITIONS**

In re Application of:
Paul H. Robb
Application No. 13/008,753
Filed: January 18, 2011
Attorney Docket No. 135330.00005

: DECISION ON REQUEST TO
: PARTICIPATE IN THE PATENT
: PROSECUTION HIGHWAY
: PROGRAM AND PETITION
: TO MAKE SPECIAL UNDER
: 37 CFR 1.102(a)

This is a decision on the request to participate in the PCT Patent Prosecution Highway (PCT-PPH) pilot program and the petition under 37 CFR 1.102(a), filed on October 10, 2011 to make the above-identified application special.

The request and petition are **GRANTED**.

**Discussion**

A grantable request to participate in the PCT-PPH pilot program and petition to make special require:

(1) The U.S. application must have an eligible relationship to one or more PCT applications where the ISA or IPEA are the JPO, EPO, KIPO, NPI, NBPR, or USPTO;

(2) At least one claim in the PCT application has novelty, inventive step, and industrial applicability and must be free of any observations in Box VIII in the latest work product in the international stage or applicant must identify and explain why the claim(s) is/are not subject to the observation in Box VIII;

(3) Applicant must submit a copy of the claim(s) from the PCT application(s) that have novelty, inventive step, and industrial applicability along with an English translation thereof and a statement that the English translation is accurate, if the claims are not in the English language;

(4) All the claims in the U.S. application must sufficiently correspond or be amended to sufficiently correspond to the claim(s) that have novelty, inventive step, and industrial applicability in the PCT application(s);

(5) Examination of the U.S. application has not begun;

(6) Applicant must submit a copy of the latest international work product from the PCT application indicating that the claim(s) have novelty, inventive step, and industrial applicability

along with an English translation thereof and a statement that the English translation is accurate if the latest international work product is not in the English language;

(7) Applicant must submit an IDS listing the documents cited by the PCT examiner in the international work product along with copies of documents except U.S. patents or U.S. patent application publications.

The request to participate in the PCT-PPH pilot program and petition comply with the above requirements. Accordingly, the above-identified application has been accorded "special" status.

Telephone inquiries concerning this decision should be directed to Joan Olszewski at 571-272-7751.

All other inquiries concerning the examination or status of the application is accessible in the PAIR system at http://www.uspto.gov/ebc.index.html.

This application will be forwarded to the examiner for action on the merits commensurate with this decision once this application's formality reviews have been completed.

/dab/
David Bucci
Petitions Examiner
Office of Petitions

UNITED STATES PATENT AND TRADEMARK OFFICE

Commissioner for Patents
United States Patent and Trademark Office
P.O. Box 1450
Alexandria, VA 22313-1450
www.uspto.gov

MAILED

JAN 30 2012

OFFICE OF PETITIONS

KNOBBE MARTENS OLSON &
BEAR LLP
2040 MAIN STREET
FOURTEENTH FLOOR
IRVINE CA 92614

: DECISION ON REQUEST TO
: PARTICIPATE IN THE PATENT
: PROSECUTION HIGHWAY
: PROGRAM AND PETITION
: TO MAKE SPECIAL UNDER
: 37 CFR 1.102(a)

In re Application of
YOKOTE, et al
Application No.: 13/008,816
Filed: January 18, 2011
Attorney Docket No.: KATOSH.094AUS

For: TELEVISION APPARATUS AND
ELECTRONIC DEVICE

This is a decision on the request to participate in the Patent Prosecution Highway (PPH) program and the petition under 37 CFR 1.102(a), filed November 30, 2011, to make the above-identified application special.

The request and petition are **GRANTED**.

**Discussion**

A grantable request to participate in the PPH pilot program and petition to make special require:

1. The U.S. application is

    a. a Paris Convention application which either
        i. validly claims priority under 35 U.S.C. 119(a) and 37 CFR 1.55 to one or more applications filed in the JPO, or
        ii. validly claims priority to a PCT application that contains no priority claims, or
    b. a national stage application under the PCT (an application which entered the national stage in the U.S. from a PCT international application after compliance with 35 U.S.C. 371), which PCT application
        i. validly claims priority to an application filed in the JPO, or
        ii. validly claims priority to a PCT application that contains no priority claims, or
        iii. contains no priority claim, or
    c. a so-called bypass application filed under 35 U.S.C. 111(a) which validly claims benefit under 35 U.S.C. 120 to a PCT application, which PCT application

i. validly claims priority to an application filed in the JPO, or
ii. validly claims priority to a PCT application that contains no priority claims, or
iii. contains no priority claim;

2. Applicant must submit a copy of:
   a. The allowable/patentable claim(s) from the JPO application(s);
   b. An English translation of the allowable/patentable claim(s) and
   c. A statement that the English translation is accurate;
3. Applicant must:
   a. Ensure all the claims in the U.S. application must sufficiently correspond or be amended to sufficiently correspond to the allowable/patentable claim(s) in the JPO application(s) and
   b. Submit a claims correspondence table in English;
4. Examination of the U.S. application has not begun;
5. Applicant must submit:
   a. Documentation of prior office action:
      i. a copy of the office action(s) just prior to the "Decision to Grant a Patent" from each of the JPO application(s) containing the allowable/patentable claim(s) or
      ii. if the allowable/patentable claims(s) are from a "Notification of Reasons for Refusal" then the Notification of Reasons for Refusal or
      iii. if the JPO application is a first action allowance then no office action from the JPO is necessary should be indicated on the request/petition form;
   b. An English language translation of the JPO Office action from (5)(a)(i)-(ii) above
   c. A statement that the English translation is accurate;
6. Applicant must submit:
   a. An IDS listing the documents cited by the JPO examiner in the JPO office action (unless already submitted in this application)
   b. Copies of the documents except U.S. patents or U.S. patent application publications (unless already submitted in this application);

The request to participate in the PPH pilot program and petition comply with the above requirements. Accordingly, the above-identified application has been accorded "special" status.

Inquiries concerning this decision should be directed to Diane Goodwyn at (571) 272-6735.

All other inquiries concerning the examination or status of the application is accessible in the PAIR system at http://www.uspto.gov/ebc.index.html.

This application is being forwarded to Technology Center AU 2486 for action on the merits commensurate with this decision.

David Buecl
Petitions Examiner
Office of Petitions

UNITED STATES PATENT AND TRADEMARK OFFICE

Commissioner for Patents
United States Patent and Trademark Office
P.O. Box 1450
Alexandria, VA 22313-1450
www.uspto.gov

In re Application of
Qi Ning Mai

Application No. 13008822

Filed: January 18,2011

Attorney Docket No. QMAI.001P1D1C1

:DECISION ON PETITION TO MAKE SPECIAL
:UNDER 37 CFR 1.102(c)(1)

This is a decision on the electronic petition under 37 CFR 1.102 (c)(1), filed 09-FEB-2011 to make the above-identified application special based on applicant's age as set forth in MPEP § 708.02, Section IV.

The petition is **GRANTED**.

A grantable petition to make an application special under 37 CFR 1.102(c)(1), MPEP § 708.02, Section IV: Applicant's Age must include a statement by applicant or a registered practitioner having evidence that applicant is at least 65 years of age. No fee is required.

Accordingly, the above-identified application has been accorded "special" status and will be taken up for action by the examiner upon the completion of all pre-examination processing.

Telephone inquiries concerning this electronic decision should be directed to the Electronic Business Center at 866-217-9197.

All other inquiries concerning either the examination or status of the application should be directed to the Technology Center.

UNITED STATES PATENT AND TRADEMARK OFFICE

Commissioner for Patents
United States Patent and Trademark Office
P.O. Box 1450
Alexandria, VA 22313-1450
www.uspto.gov

In re Application of
Forrest James Brown

Application No. 13008835

Filed: January 18,2011

Attorney Docket No. 300047-00007

:
:
:DECISION ON PETITION TO MAKE SPECIAL
:UNDER 37 CFR 1.102(c)(1)
:

This is a decision on the electronic petition under 37 CFR 1.102 (c)(1), filed 11-APR-2011 to make the above-identified application special based on applicant's age as set forth in MPEP § 708.02, Section IV.

The petition is **GRANTED**.

A grantable petition to make an application special under 37 CFR 1.102(c)(1), MPEP § 708.02, Section IV: Applicant's Age must include a statement by applicant or a registered practitioner having evidence that applicant is at least 65 years of age. No fee is required.

Accordingly, the above-identified application has been accorded "special" status and will be taken up for action by the examiner upon the completion of all pre-examination processing.

Telephone inquiries concerning this electronic decision should be directed to the Electronic Business Center at 866-217-9197.

All other inquiries concerning either the examination or status of the application should be directed to the Technology Center.

Doc code : PET.OP.AGE
Description : Petition to make special based on Age/Health

PTO/SB/130 (07-09)
Approved for use through 07/31/2012. OMB 0651- 0031
U.S. Patent and Trademark Office; U.S. DEPARTMENT OF COMMERCE
Under the Paperwork Reduction Act of 1995, no persons are required to respond to a collection of information unless it contains a valid OMB control number

## PETITION TO MAKE SPECIAL BASED ON AGE FOR ADVANCEMENT OF EXAMINATION UNDER 37 CFR 1.102(c)(1)

### Application Information

| | | | | | |
|---|---|---|---|---|---|
| Application Number | 13/008,835 | Confirmation Number | 9545 | Filing Date | 2011-01-18 |
| Attorney Docket Number (optional) | 300047-00007 | Art Unit | 2821 | Examiner | Owens, Douglas W |
| First Named Inventor | Forrest James Brown | | | | |
| Title of Invention | Circular Polarized Compound Loop Antenna | | | | |

**Attention: Office of Petitions**
An application may be made special for advancement of examination upon filing of a petition showing that the applicant is 65 years of age, or more. No fee is required with such a petition. See 37 CFR 1.102(c)(1) and MPEP 708.02 (IV).

APPLICANT HEREBY PETITIONS TO MAKE SPECIAL FOR ADVANCEMENT OF EXAMINATION IN THIS APPLICATION UNDER 37 CFR 1.102(c)(1) and MPEP 708.02 (IV) ON THE BASIS OF THE APPLICANT'S AGE.

A grantable petition requires one of the following items:
(1) Statement by one named inventor in the application that he/she is 65 years of age, or more; or
(2) Certification by a registered attorney/agent having evidence such as a birth certificate, passport, driver's license, etc. showing one named inventor in the application is 65 years of age, or more.

**Name of Inventor who is 65 years of age, or older**

| Given Name | Middle Name | Family Name | Suffix |
|---|---|---|---|
| Forrest | James | Brown | |

A signature of the applicant or representative is required in accordance with 37 CFR 1.33 and 10.18.
Please see 37 CFR 1.4(d) for the format of the signature.

Select (1) or (2) :

○ (1) I am an inventor in this application and I am 65 years of age, or more.

◉ (2) I am an attorney or agent registered to practice before the Patent and Trademark Office, and I certify that I am in possession of evidence, and will retain such in the application file record, showing that the inventor listed above is 65 years of age, or more.

| | | | |
|---|---|---|---|
| Signature | /Timothy D. Casey/ | Date (YYYY-MM-DD) | 2011-04-11 |
| Name | Timothy D. Casey | Registration Number | 33124 |

PTO/SB/130 (07-09)
Approved for use through 07/31/2012. OMB 0651- 0031
U.S. Patent and Trademark Office; U.S. DEPARTMENT OF COMMERCE
Under the Paperwork Reduction Act of 1995, no persons are required to respond to a collection of information unless it contains a valid OMB control number

# Privacy Act Statement

The Privacy Act of 1974 (P.L. 93-579) requires that you be given certain information in connection with your submission of the attached form related to a patent application or patent. Accordingly, pursuant to the requirements of the Act, please be advised that: (1) the general authority for the collection of this information is 35 U.S.C. 2(b)(2); (2) furnishing of the information solicited is voluntary; and (3) the principal purpose for which the information is used by the U.S. Patent and Trademark Office is to process and/or examine your submission related to a patent application or patent. If you do not furnish the requested information, the U.S. Patent and Trademark Office may not be able to process and/or examine your submission, which may result in termination of proceedings or abandonment of the application or expiration of the patent.

The information provided by you in this form will be subject to the following routine uses:

1. The information on this form will be treated confidentially to the extent allowed under the Freedom of Information Act (5 U.S.C. 552) and the Privacy Act (5 U.S.C. 552a). Records from this system of records may be disclosed to the Department of Justice to determine whether the Fr eedom of Information Act requires disclosure of these records.

2. A record from this system of records may be disclosed, as a routine use, in the course of presenting evidence to a court, magistrate, or administrative tribunal, including disclosures to opposing counsel in the course of settlement negotiations.

3. A record in this system of records may be disclosed, as a routine use, to a Member of Congress submitting a request involving an individual, to whom the record pertains, when the individual has requested assistance from the Member with respect to the subject matter of the record.

4. A record in this system of records may be disclosed, as a routine use, to a contractor of the Agency having need for the information in order to perform a contract. Recipients of information shall be required to comply with the requirements of the Privacy Act of 1974, as amended, pursuant to 5 U.S.C. 552a(m).

5. A record related to an International Application filed under the Patent Cooperation Treaty in this system of records may be disclosed, as a routine use, to the International Bureau of the World Intellectual Property Organization, pursuant to the Patent Cooperation Treaty.

6. A record in this system of records may be disclosed, as a routine use, to another federal agency for purposes of National Security review (35 U.S.C. 181) and for review pursuant to the Atomic Energy Act (42 U.S.C. 218(c)).

7. A record from this system of records may be disclosed, as a routine use, to the Administrator, General Services, or his/her designee, during an inspection of records conducted by GSA as part of that agency's responsibility to recommend improvements in records management practices and programs, under authority of 44 U.S.C. 2904 and 2906. Such disclosure shall be made in accordance with the GSA regulations governing inspection of records for this purpose, and any other relevant (i.e., GSA or Commerce) directive. Such disclosure shall not be used to make determinations about indivi duals.

8. A record from this system of records may be disclosed, as a routine use, to the public after either publication of the application pursuant to 35 U.S.C. 122(b) or issuance of a patent pursuant to 35 U.S.C. 151. Further, a record may be disclosed, subject to the limitations of 37 CFR 1.14, as a routine use, to the public if the record was filed in an application which became abandoned or in which the proceedings were terminated and which application is referenced by either a published application, an application open to public inspections or an issued patent.

9. A record from this system of records may be disclosed, as a routine use, to a Federal, State, or local law enforcement agency, if the USPTO becomes aware of a violation or potential violation of law or regulation.

**Doc Code: PET.GREEN**
**Document Description: Petition for Green Tech Pilot**

PTO/SB/420 (11-10)
Approved for use through 01/31/2011. OMB 0651-0062
U.S. Patent and Trademark Office; U. S. DEPARTMENT OF COMMERCE
Under the Paperwork Reduction Act of 1995, no persons are required to respond to a collection of information unless it displays a valid OMB control number.

# PETITION TO MAKE SPECIAL UNDER THE GREEN TECHNOLOGY PILOT PROGRAM

| Attorney Docket Number: 4551.3 | Application Number (if known): | Filing date: January 18, 2011 |
|---|---|---|
| First Named Inventor: Mark Zaloudek | | |
| Title: POST STRAIGHTENING APPARATUS AND METHOD | | |

**APPLICANT HEREBY REQUESTS TO PARTICIPATE IN THE GREEN TECHNOLOGY PILOT PROGRAM FOR THE ABOVE-IDENTIFIED APPLICATION. See Instruction Sheet on page 2.**

This petition must be timely filed electronically using the USPTO electronic filing system, EFS-Web.

1. By filing this petition:

   **Applicant is requesting early publication: Applicant hereby requests early publication under 37 CFR 1.219 and the publication fee set forth in 37 CFR 1.18(d) accompanies this request.**

2. By filing this petition: applicant is agreeing to make an election without traverse in a telephonic interview and elect an invention that meets the eligibility requirements for the Green Technology Pilot Program, if the Office determines that the claims are not obviously directed to a single invention. See Instruction Sheet.

3. This request is accompanied by statements of special status for the eligibility requirement.

4. The application contains no more than three (3) independent claims and twenty (20) total claims.

5. The application does not contain any multiple dependent claims.

6. Other attachments: _____

| Signature | Date January 18, 2011 |
|---|---|
| Name (Print/Typed) Matthew S. Gibson | Registration Number 63523 |

***Note:*** *Signatures of all the inventors or assignees of record of the entire interest or their representative(s) are required in accordance with 37 CFR 1.33 and 11.18. Please see 37 CFR 1.4(d) for the form of the signature. If necessary, submit multiple forms for more than one signature see below*.*

☐ *Total of _____ forms are submitted.

The information is required to obtain or retain a benefit by the public which is to file (and by the USPTO to process) an application. Confidentiality is governed by 35 U.S.C. 122 and 37 CFR 1.11 and 1.14. This collection is estimated to take 12 hours to complete, including gathering, preparing, and submitting the completed application form to the USPTO. Time will vary depending upon the individual case. Any comments on the amount of time you require to complete this form and/or suggestions for reducing this burden, should be sent to the Chief Information Officer, U.S. Patent and Trademark Office, U.S. Department of Commerce, P.O. Box 1450, Alexandria, VA 22313-1450. DO NOT SEND FEES OR COMPLETED FORMS TO THIS ADDRESS. **SEND TO: Commissioner for Patents, P.O. Box 1450, Alexandria, VA 22313-1450.**

*If you need assistance in completing the form, call 1-800-PTO-9199 and select option 2.*

Attorney Docket No.: 4551.3
Filing Date: January 18, 2011
Inventor: Mark Zaloudek
Title: POST STRAIGHTENING APPARATUS AND METHOD

PETITION TO MAKE SPECIAL UNDER THE GREEN TECHNOLOGY PILOT PROGRAM
STATEMENT OF SPECIAL STATUS

Special status is sought because the invention materially enhances the quality of the environment by contributing to the restoration or maintenance of the basic life-sustaining natural elements. Please see for example paragraphs 1-4 and the Abstract of the application.

UNITED STATES PATENT AND TRADEMARK OFFICE

UNITED STATES DEPARTMENT OF COMMERCE
United States Patent and Trademark Office
Address: COMMISSIONER FOR PATENTS
P.O. Box 1450
Alexandria, Virginia 22313-1450
www.uspto.gov

| APPLICATION NO. | FILING DATE | FIRST NAMED INVENTOR | ATTORNEY DOCKET NO. | CONFIRMATION NO. |
|---|---|---|---|---|
| 13/008,858 | 01/18/2011 | Mark Zaloudek | 4551.3 | 9614 |

24919 7590 01/25/2011

MCAFEE & TAFT
TENTH FLOOR, TWO LEADERSHIP SQUARE
211 NORTH ROBINSON
OKLAHOMA CITY, OK 73102

| EXAMINER | |
|---|---|
| ART UNIT | PAPER NUMBER |
| 3725 | |

| MAIL DATE | DELIVERY MODE |
|---|---|
| 01/25/2011 | PAPER |

**Please find below and/or attached an Office communication concerning this application or proceeding.**

The time period for reply, if any, is set in the attached communication.

UNITED STATES PATENT AND TRADEMARK OFFICE

Commissioner for Patents
United States Patent and Trademark Office
P.O. Box 1450
Alexandria, VA 22313-1450
www.uspto.gov

MCAFEE & TAFT
TENTH FLOOR, TWO LEADERSHIP SQUARE
211 NORTH ROBINSON
OKLAHOMA CITY OK 73102

| | | |
|---|---|---|
| In re Application of | : | |
| ZALOUDEK, MARK | : | DECISION ON PETITION |
| Application No. 13/008,858 | : | TO MAKE SPECIAL UNDER |
| Filed: Jan. 18, 2011 | : | THE GREEN TECHNOLOGY |
| Attorney Docket No. 4551.3 | : | PILOT PROGRAM |

This is a decision on the petition under 37 CFR 1.102, filed Jan.18, 2011, to make the above-identified application special under the pilot program for applications pertaining to Green Technologies as set forth in 74 Federal Register Notice 64666 (December 8, 2009) and amended by 75 Federal Register Notice 28554 (May 21, 2010) and 75 Federal Register Notice 69049 (November 10, 2010).

The petition is **dismissed**.

A grantable petition to make an application special under 37 CFR 1.102 and the pilot program as set forth in 74 FR 64666 must be directed to a nonprovisional application filed under 35 USC 111(a) or be a national stage entry under 35 USC 371, exclusive of any reissue applications.

In order to qualify for special status, the following requirements must be met. 1) The application must have no more than 3 independent claims and no more than 20 total claims. 2) The application must not contain any multiple dependent claims. 3) The petition must state the basis for seeking special status, i.e., the claimed invention either: A) materially enhances the quality of the environment or B) materially contributes to: i) the discovery or development of renewable energy resources, ii) the more efficient utilization and conservation of energy resources, or iii) greenhouse gas emission reduction. 4) If the disclosure is not clear on its face that the claimed invention materially contributes under category (A) or (B), the petition must be accompanied by a statement by the applicant, assignee, or an attorney/agent registered to practice before the Office explaining how the materiality standard is met. 5) A statement that applicant will agree to make an election without traverse in a telephonic interview if a restriction requirement is made by the examiner. 6) The petition to make special must be filed electronically. 7) The petition

must be filed at least one day prior to the date that a first Office Action appears in the Patent Application Information Retrieval (PAIR) system. 8) The petition must be accompanied by a request for early publication in compliance with 37 CFR 1.219 and include the publication fee as set forth in 37 CFR 1.18(d).

The requirement for a fee for consideration of the petition to make special for applications pertaining to Green Technologies has been waived.

The petition lacks item # 4.

In regard to item 4, petitioner should note that the instant petition includes a statement identifying the basis for the special status (i.e., whether the instant invention (1) materially enhances the quality of the environment or materially contributes to (2) development of renewable energy resources or energy conservation, or (3) greenhouse gas reduction) as required by sections II and III of the notice. However, as stated in the notice, applicant must also provide a statement pertaining to the materiality standard if the application disclosure is not clear on its face as to the materiality of the basis for the special status of the invention. This petition lacks such a statement and it is not agreed that the application on its face meets that materiality standard. Petitioner indicates that the claimed invention relates to enhancement of the quality of the environment. This is not convincing. For example, it is not clear how the claimed article straightening apparatus with an actuator, end piece and a support member will provide and enhance the quality of the environment or contribute to energy conservation or greenhouse gas reduction. It is a common sense that a less efficient refrigeration system will not perform efficiently.

Any reconsideration of this decision should be submitted through the USPTO electronic filing system, EFS-Web, and selecting the document description of "Petition for Green Tech Pilot" on the EFS-Web screen.

Telephone inquiries concerning this decision should be directed to Henry C. Yuen at 571-272-4856.

The application is currently undergoing pre-examination processing. The application will be forwarded to the Technology Center Art Unit 3725 for action in its regular turn.

/Henry C. Yuen/

Henry C. Yuen
Quality Assurance Specialist
Technology Center 3700

UNITED STATES PATENT AND TRADEMARK OFFICE

UNITED STATES DEPARTMENT OF COMMERCE
United States Patent and Trademark Office
Address: COMMISSIONER FOR PATENTS
P.O. Box 1450
Alexandria, Virginia 22313-1450
www.uspto.gov

| APPLICATION NO. | FILING DATE | FIRST NAMED INVENTOR | ATTORNEY DOCKET NO. | CONFIRMATION NO. |
|---|---|---|---|---|
| 13/008,858 | 01/18/2011 | Mark Zaloudek | 4551.3 | 9614 |

24919 7590 02/22/2011

MCAFEE & TAFT
TENTH FLOOR, TWO LEADERSHIP SQUARE
211 NORTH ROBINSON
OKLAHOMA CITY, OK 73102

| EXAMINER | |
|---|---|
| ROSS, DANA | |

| ART UNIT | PAPER NUMBER |
|---|---|
| 3725 | |

| MAIL DATE | DELIVERY MODE |
|---|---|
| 02/22/2011 | PAPER |

**Please find below and/or attached an Office communication concerning this application or proceeding.**

The time period for reply, if any, is set in the attached communication.

UNITED STATES PATENT AND TRADEMARK OFFICE

Commissioner for Patents
United States Patent and Trademark Office
P.O. Box 1450
Alexandria, VA 22313-1450
www.uspto.gov

MCAFEE & TAFT
TENTH FLOOR, TWO LEADERSHIP SQUARE
211 NORTH ROBINSON
OKLAHOMA CITY OK 73102

| | | |
|---|---|---|
| In re Application of | : | |
| ZALOUDEK, MARK | : | DECISION ON PETITION |
| Application No. 13/008,858 | : | TO MAKE SPECIAL UNDER |
| Filed: Jan. 18, 2011 | : | THE GREEN TECHNOLOGY |
| Attorney Docket No. 4551.3 | : | PILOT PROGRAM |

This is a decision on the renewed petition under 37 CFR 1.102, filed Feb. 18, 2011, to make the above-identified application special under the pilot program for applications pertaining to Green Technologies as set forth in 74 Federal Register Notice 64666 (December 8, 2009) and amended by 75 Federal Register Notice 28554 (May 21, 2010) and 75 Federal Register Notice 69049 (November 10, 2010).

The petition is **granted**.

If reconsideration of this decision is desired, a petition for reconsideration must be filed within ONE (1) MONTH OR THIRTY (30) DAYS from the mail date of this decision, whichever is longer. No extension of this time limit can be granted under 37 CFR 1.136(a) or (b). The petition for reconsideration should include an exhaustive attempt to provide the lacking item(s) noted below, since, after a decision on the petition for reconsideration, no further reconsideration or review of the matter will be undertaken by the Director.

A grantable petition to make an application special under 37 CFR 1.102 and the pilot program as set forth in 74 FR 64666 must be directed to a nonprovisional application filed under 35 USC 111(a) or be a national stage entry under 35 USC 371, exclusive of any reissue applications.

In order to qualify for special status, the following requirements must be met. 1) The application must have no more than 3 independent claims and no more than 20 total claims. 2) The application must not contain any multiple dependent claims. 3) The petition must state the basis for seeking special status, i.e., the claimed invention either: A) materially enhances the quality of the environment or B) materially contributes to: i) the discovery or development of renewable energy resources, ii) the more efficient utilization and conservation of energy resources, or iii)

greenhouse gas emission reduction. 4) If the disclosure is not clear on its face that the claimed invention materially contributes under category (A) or (B), the petition must be accompanied by a statement by the applicant, assignee, or an attorney/agent registered to practice before the Office explaining how the materiality standard is met. 5) A statement that applicant will agree to make an election without traverse in a telephonic interview if a restriction requirement is made by the examiner. 6) The petition to make special must be filed electronically. 7) The petition must be filed at least one day prior to the date that a first Office Action appears in the Patent Application Information Retrieval (PAIR) system. 8) The petition must be accompanied by a request for early publication in compliance with 37 CFR 1.219 and include the publication fee as set forth in 37 CFR 1.18(d).

The requirement for a fee for consideration of the petition to make special for applications pertaining to Green Technologies has been waived.

The instant petition complies with items 1 – 8 above. Accordingly, the above-identified application has been accorded "special" status.

Telephone inquires concerning this decision should be directed to Henry C. Yuen at 571-272-4856.

This application will be forwarded to the Technology Center Art Unit 3725 for action on the merits commensurate with this decision.

/Henry C. Yuen/

Henry C. Yuen
Quality Assurance Specialist
Technology Center TC 3700

Doc code : PET.OP.AGE
Description : Petition to make special based on Age/Health

PTO/SB/130 (01-09)
Approved for use through 02/28/2009. OMB 0651- 0031
U.S. Patent and Trademark Office; U.S. DEPARTMENT OF COMMERCE
Under the Paperwork Reduction Act of 1995, no persons are required to respond to a collection of information unless it contains a valid OMB control number

# PETITION TO MAKE SPECIAL BASED ON AGE FOR ADVANCEMENT OF EXAMINATION UNDER 37 CFR 1.102(c)(1)

## Application Information

| | | | | | |
|---|---|---|---|---|---|
| Application Number | 13008859 | Confirmation Number | 9617 | Filing Date | 2011-01-18 |
| Attorney Docket Number (optional) | 02257-25086.DIV | Art Unit | | Examiner | |
| First Named Inventor | Antone Pivik | | | | |
| Title of Invention | Method For Preparing a Jerky Food Product | | | | |

**Attention: Office of Petitions**
An application may be made special for advancement of examination upon filing of a petition showing that the applicant is 65 years of age, or more. No fee is required with such a petition. See 37 CFR 1.102(c)(1) and MPEP 708.02 (IV).

APPLICANT HEREBY PETITIONS TO MAKE SPECIAL FOR ADVANCEMENT OF EXAMINATION IN THIS APPLICATION UNDER 37 CFR 1.102(c)(1) and MPEP 708.02 (IV) ON THE BASIS OF THE APPLICANT'S AGE.

A grantable petition requires one of the following items:
(1) Statement by one named inventor in the application that he/she is 65 years of age, or more; or
(2) Certification by a registered attorney/agent having evidence such as a birth certificate, passport, driver's license, etc. showing one named inventor in the application is 65 years of age, or more.

**Name of Inventor who is 65 years of age, or older**

| Given Name | Middle Name | Family Name | Suffix |
|---|---|---|---|
| Antone | Francis | Pivik | |

A signature of the applicant or representative is required in accordance with 37 CFR 1.33 and 10.18.
Please see 37 CFR 1.4(d) for the format of the signature.

Select (1) or (2) :

○ (1) I am an inventor in this application and I am 65 years of age, or more.

◉ (2) I am an attorney or agent registered to practice before the Patent and Trademark Office, and I certify that I am in possession of evidence, and will retain such in the application file record, showing that the inventor listed above is 65 years of age, or more.

| | | | |
|---|---|---|---|
| Signature | /Christopher L Johnson/ | Date (YYYY-MM-DD) | 2011-04-26 |
| Name | Christopher L Johnson | Registration Number | 46809 |

Doc code : PET.OP.AGE
Description : Petition to make special based on Age/Health

PTO/SB/130 (01-09)
Approved for use through 02/28/2009. OMB 0651- 0031
U.S. Patent and Trademark Office; U.S. DEPARTMENT OF COMMERCE
Under the Paperwork Reduction Act of 1995, no persons are required to respond to a collection of information unless it contains a valid OMB control number

# Privacy Act Statement

The Privacy Act of 1974 (P.L. 93-579) requires that you be given certain information in connection with your submission of the attached form related to a patent application or patent. Accordingly, pursuant to the requirements of the Act, please be advised that: (1) the general authority for the collection of this information is 35 U.S.C. 2(b)(2); (2) furnishing of the information solicited is voluntary; and (3) the principal purpose for which the information is used by the U.S. Patent and Trademark Office is to process and/or examine your submission related to a patent application or patent. If you do not furnish the requested information, the U.S. Patent and Trademark Office may not be able to process and/or examine your submission, which may result in termination of proceedings or abandonment of the application or expiration of the patent.

The information provided by you in this form will be subject to the following routine uses:

1. The information on this form will be treated confidentially to the extent allowed under the Freedom of Information Act (5 U.S.C. 552) and the Privacy Act (5 U.S.C. 552a). Records from this system of records may be disclosed to the Department of Justice to determine whether the Fr eedom of Information Act requires disclosure of these records.

2. A record from this system of records may be disclosed, as a routine use, in the course of presenting evidence to a court, magistrate, or administrative tribunal, including disclosures to opposing counsel in the course of settlement negotiations.

3. A record in this system of records may be disclosed, as a routine use, to a Member of Congress submitting a request involving an individual, to whom the record pertains, when the individual has requested assistance from the Member with respect to the subject matter of the record.

4. A record in this system of records may be disclosed, as a routine use, to a contractor of the Agency having need for the information in order to perform a contract. Recipients of information shall be required to comply with the requirements of the Privacy Act of 1974, as amended, pursuant to 5 U.S.C. 552a(m).

5. A record related to an International Application filed under the Patent Cooperation Treaty in this system of records may be disclosed, as a routine use, to the International Bureau of the World Intellectual Property Organization, pursuant to the Patent Cooperation Treaty.

6. A record in this system of records may be disclosed, as a routine use, to another federal agency for purposes of National Security review (35 U.S.C. 181) and for review pursuant to the Atomic Energy Act (42 U.S.C. 218(c)).

7. A record from this system of records may be disclosed, as a routine use, to the Administrator, General Services, or his/her designee, during an inspection of records conducted by GSA as part of that agency's responsibility to recommend improvements in records management practices and programs, under authority of 44 U.S.C. 2904 and 2906. Such disclosure shall be made in accordance with the GSA regulations governing inspection of records for this purpose, and any other relevant (i.e., GSA or Commerce) directive. Such disclosure shall not be used to make determinations about indivi duals.

8. A record from this system of records may be disclosed, as a routine use, to the public after either publication of the application pursuant to 35 U.S.C. 122(b) or issuance of a patent pursuant to 35 U.S.C. 151. Further, a record may be disclosed, subject to the limitations of 37 CFR 1.14, as a routine use, to the public if the record was filed in an application which became abandoned or in which the proceedings were terminated and which application is referenced by either a published application, an application open to public inspections or an issued patent.

9. A record from this system of records may be disclosed, as a routine use, to a Federal, State, or local law enforcement agency, if the USPTO becomes aware of a violation or potential violation of law or regulation.

UNITED STATES PATENT AND TRADEMARK OFFICE

Commissioner for Patents
United States Patent and Trademark Office
P.O. Box 1450
Alexandria, VA 22313-1450
www.uspto.gov

In re Application of
Antone Pivik

Application No. 13008859

Filed: January 18,2011

Attorney Docket No. 02257-25086.DIV

:
:
:DECISION ON PETITION TO MAKE SPECIAL
:UNDER 37 CFR 1.102(c)(1)
:

This is a decision on the electronic petition under 37 CFR 1.102 (c)(1), filed 26-APR-2011 to make the above-identified application special based on applicant's age as set forth in MPEP § 708.02, Section IV.

The petition is **GRANTED**.

A grantable petition to make an application special under 37 CFR 1.102(c)(1), MPEP § 708.02, Section IV: Applicant's Age must include a statement by applicant or a registered practitioner having evidence that applicant is at least 65 years of age. No fee is required.

Accordingly, the above-identified application has been accorded "special" status and will be taken up for action by the examiner upon the completion of all pre-examination processing.

Telephone inquiries concerning this electronic decision should be directed to the Electronic Business Center at 866-217-9197.

All other inquiries concerning either the examination or status of the application should be directed to the Technology Center.

**Doc Code: PET.GREEN**
**Document Description: Petition for Green Tech Pilot**

PTO/SB/420 (11-10)
Approved for use through 01/31/2011. OMB 0651-0032
U.S. Patent and Trademark Office; U.S. DEPARTMENT OF COMMERCE
Under the Paperwork Reduction Act of 1995, no persons are required to respond to a collection of information unless it displays a valid OMB control number.

# PETITION TO MAKE SPECIAL UNDER THE GREEN TECHNOLOGY PILOT PROGRAM

| Attorney Docket Number: | Application Number (if known): | Filing date: 18 January 2011 |
|---|---|---|
| First Named Inventor: Albert Frank Lowas, III | | |
| Title: Cellular Mobile Radiotelephone Tower Wind Turbine | | |

**APPLICANT HEREBY REQUESTS TO PARTICIPATE IN THE GREEN TECHNOLOGY PILOT PROGRAM FOR THE ABOVE-IDENTIFIED APPLICATION. See Instruction Sheet on page 2.**

This petition must be timely filed electronically using the USPTO electronic filing system, EFS-Web.

1. By filing this petition:

   **Applicant is requesting early publication: Applicant hereby requests early publication under 37 CFR 1.219 and the publication fee set forth in 37 CFR 1.18(d) accompanies this request.**

2. By filing this petition: applicant is agreeing to make an election without traverse in a telephonic interview and elect an invention that meets the eligibility requirements for the Green Technology Pilot Program, if the Office determines that the claims are not obviously directed to a single invention. See Instruction Sheet.

3. This request is accompanied by statements of special status for the eligibility requirement.

4. The application contains no more than three (3) independent claims and twenty (20) total claims.

5. The application does not contain any multiple dependent claims.

6 Other attachments: _____

| Signature 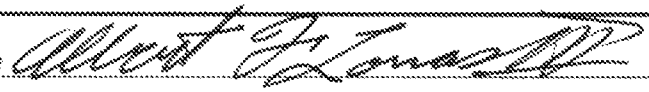 | Date 18 January 2011 |
|---|---|
| Name (Print/Typed) Albert F. Lowas, III | Registration Number |

*Note: Signatures of all the inventors or assignees of record of the entire interest or their representative(s) are required in accordance with 37 CFR 1.33 and 11.18. Please see 37 CFR 1.4(d) for the form of the signature. If necessary, submit multiple forms for more than one signature, see below*.*

☐ *Total of _____ forms are submitted.

The information is required to obtain or retain a benefit by the public which is to file (and by the USPTO to process) an application. Confidentiality is governed by 35 U.S.C. 122 and 37 CFR 1.11 and 1.14. This collection is estimated to take 12 hours to complete, including gathering, preparing, and submitting the completed application form to the USPTO. Time will vary depending upon the individual case. Any comments on the amount of time you require to complete this form and/or suggestions for reducing this burden, should be sent to the Chief Information Officer, U.S. Patent and Trademark Office, U.S. Department of Commerce, P.O. Box 1450, Alexandria, VA 22313-1450. DO NOT SEND FEES OR COMPLETED FORMS TO THIS ADDRESS. **SEND TO: Commissioner for Patents, P.O. Box 1450, Alexandria, VA 22313-1450.**

*If you need assistance in completing the form, call 1-800-PTO-9199 and select option 2.*

From the Desk of: Albert F. Lowas, III
4685 Sullivan Road
Springfield, OH 45502
18 January 2011

Subject: Patent Application Petition to make Special under Green Technology Pilot Program
Application Titled: Cellular Mobile Radiotelephone Tower Wind Turbine

To: David Kappos, Director, United States Patent and Trademark Office

Mr. David Kappos (or designated US Patent Specialist)

Please accept this petition to make special the Cellular Mobile Radiotelephone Tower Wind Turbine invention as part of the Green Technology Pilot Program.

The Cellular Mobile Radiotelephone Tower Wind Turbine invention specifically develops new sources of readily available energy resources through an innovative combination of two readily available technologies—the Cellular Mobile Radiotelephone Tower and the wind turbine. This development of electricity from readily available wind power meets the definition of a Green Technology as published in 74 Fed. Reg. 64666.

The Cellular Mobile Radiotelephone Tower Wind Turbine is a Green Technology in that it contributes to all three categories of the eligibility requirements of Section III of 74 Fed. Reg. 64666. First and most importantly, the primary purpose of the invention is to develop renewable energy resources; specifically, the invention uses readily available Cellular Mobile Radiotelephone towers to harvest wind power for wind-driven electricity generation. Second, the invention conserves energy in that it co-locates electrical generation with the electronics that use that power; thereby it reduces the electrical power losses involved in long distance transmission and in transformation. Third, the invention reduces greenhouse emissions in its elimination of the need for on-site gasoline- (or diesel-) driven emergency electric generators.

Winds at the higher portions of the Cellular Mobile Radiotelephone towers are of the velocity that is required for reliable electrical power generation; however, current art wind turbine applications do not harness that available high-power wind because those applications rely on purpose-built towers. This invention concerns the combination of existing towers with existing technology wind turbines and it employs an innovative control mechanism to connect the wind-generated electrical power to the electronics inherent in the Cellular Mobile Radiotelephone station.

Concerning the uniqueness of this invention, as the inventor I have performed an exhaustive search of various sources and have found no invention or production item resembling this invention. A search of the following US Patent Classes was conducted: 52/637, 726; 250/33; 290/44, 54-55; 307/64–66, 82–87; 343/890; 415/2-4, 60; and 416/9, 197. Additional market research included a search of internet news articles and professional society sources; again, none address the specific mounting of wind turbines on Cellular Mobile Radiotelephone towers. No directly related technologies were found in any of these sources because (as noted) prior arts separately use the Cellular Mobile Radiotelephone tower and the wind turbine; thus, a complete examination support document is not part of this submission. This is also consistent with the submission standards of 74 Fed. Reg. 64666 (Supplementary Information).

I therefore petition to make special this application under the Green Technology Pilot Program. This petition is based upon the primary purpose of the system, which is to capture readily available wind resources for electrical power generation. To the best of my knowledge, the Cellular Mobile Radiotelephone Tower Wind Turbine is an entirely unique and innovative utilization of wind turbines on Cellular Mobile Radiotelephone towers, and it represents a strong potential to generate power from this renewable resource on the hundreds of thousands of Cellular Mobile Radiotelephone towers across the United States. Furthermore, as required by 74 Fed. Reg. 64666, I certify that "if the USPTO determines that the claims are directed to multiple inventions," I will "agree to make an election without traverse in a telephonic interview, and elect an invention that meets the eligibility requirements in section II or III of" 74 Fed. Reg. 64666. Likewise, as required by 74 Fed. Reg. 64666, as part of this petition I request early publication (ref 37 CFR 1.219)

I am available by phone (937-760-5212) or e-mail (al_lowas@sbcglobal.net) for any questions concerning this petition.

Very Respectfully,

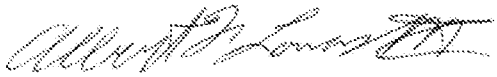

Albert F. Lowas, III
Inventor, Customer Number 81375

UNITED STATES PATENT AND TRADEMARK OFFICE

Commissioner for Patents
United States Patent and Trademark Office
P.O. Box 1450
Alexandria, VA 22313-1450
www.uspto.gov

MAIL

APR 19 2011

DIRECTOR'S OFFICE
TECHNOLOGY CENTER 2600

Albert F. Lawas, III
4685 Sullivan Road
Springfield OH 45502

In re Application of :
LOWAS, ALBERT FRANK III :
Application No. 13/008,905 :
Filed: November 5, 2010 :
Attorney Docket No. **N/A** :

DECISION ON PETITION
TO MAKE SPECIAL UNDER
THE GREEN TECHNOLOGY
PILOT PROGRAM

This is a decision on the petition under 37 CFR 1.102, filed January 19, 2011, to make the above-identified application special under the pilot program for applications pertaining to Green Technologies as set forth in 74 Federal Register Notice 64666 (December 8, 2009) and amended by 75 Federal Register Notice 28554 (May 21, 2010) and 75 Federal Register Notice 69049 (November 10, 2010).

The petition is **GRANTED**.

A grantable petition to make an application special under 37 CFR 1.102 and the pilot program as set forth in 74 FR 64666 must be directed to a nonprovisional application filed under 35 USC 111(a) or be a national stage entry under 35 USC 371, exclusive of any reissue applications.

In order to qualify for special status, the following requirements must be met. 1) The application must have no more than 3 independent claims and no more than 20 total claims. 2) The application must not contain any multiple dependent claims. 3) The petition must state the basis for seeking special status, i.e., the claimed invention either: A) materially enhances the quality of the environment or B) materially contributes to: i) the discovery or development of renewable energy resources, ii) the more efficient utilization and conservation of energy resources, or iii) greenhouse gas emission reduction. 4) If the disclosure is not clear on its face that the claimed invention materially contributes under category (A) or (B), the petition must be accompanied by a statement by the applicant, assignee, or an attorney/agent registered to practice before the Office explaining how the materiality standard is met. 5) A statement that applicant will agree to make an election without traverse in a telephonic interview if a restriction requirement is made by the examiner. 6) The petition to make special must be filed electronically. 7) The petition must be filed at least one day prior to the date that a first Office Action appears in the Patent Application Information Retrieval (PAIR) system. 8) The petition must be accompanied by a request for early publication in compliance with 37 CFR 1.219 and include the publication fee as set forth in 37 CFR 1.18(d).

The requirement for a fee for consideration of the petition to make special for applications pertaining to Green Technologies has been waived.

The instant petition complies with items 1 – 8 above. Accordingly, the above-identified application has been accorded "special" status.

Telephone inquires concerning this decision should be directed to Ken Wieder at 571-272-2986.

The application is currently with the Classification department undergoing normal processing. Once processing is complete the application file will be forwarded to the appropriate Technology Center Art Unit for action on the merits commensurate with this decision.

/Kenneth A. Wieder/

Kenneth A. Wieder
Quality Assurance Specialist
Technology Center 2600
Communications

UNITED STATES PATENT AND TRADEMARK OFFICE

Commissioner for Patents
United States Patent and Trademark Office
P.O. Box 1450
Alexandria, VA 22313-1450
www.uspto.gov

LESAVICH HIGH-TECH LAW GROUP, P.C.
SUITE 325
39 S. LASALLE STREET
CHICAGO, IL 60603

**MAILED**

JUN 13 2011

OFFICE OF PETITIONS

In re Application of :
Leslie Rosenthal et al :
Application No. 13/008,980 : DECISION ON PETITION
Filed: January 19, 2011 : TO WITHDRAW
Attorney Docket No. 08,115-E : FROM RECORD
:

This is a decision on the Request to Withdraw as attorney or agent of record under 37 C.F.R. § 1.36(b), filed May 4, 2011.

The request is **APPROVED**.

The request was signed by Stephen Lesavich on behalf of all the practitioners of record associated with Customer Number 32097.

Applicant is reminded that there is no attorney of record at this time.

All future correspondence will be directed to assignee Rosenthal Collins Group, LLC at the below address.

Telephone inquiries concerning this decision should be directed to Irvin Dingle at (571) 272-3210.

Irvin Dingle
Petitions Examiner
Office of Petitions

cc: Rosenthal Collins Group, LLC (Assignee)
c/o Mr. Gerry Fishman, Esq. (General Counsel)
216 W. Jackson, Suite 400
Chicago, IL 60606

UNITED STATES PATENT AND TRADEMARK OFFICE

UNITED STATES DEPARTMENT OF COMMERCE
United States Patent and Trademark Office
Address: COMMISSIONER FOR PATENTS
P.O. Box 1450
Alexandria, Virginia 22313-1450
www.uspto.gov

| APPLICATION NUMBER | FILING OR 371(C) DATE | FIRST NAMED APPLICANT | ATTY. DOCKET NO./TITLE |
|---|---|---|---|
| 13/008,980 | 01/19/2011 | Leslie Rosenthal | 08,115-E |

**CONFIRMATION NO. 9887**

**POWER OF ATTORNEY NOTICE**

32097
LESAVICH HIGH-TECH LAW GROUP, P.C.
SUITE 325
39 S. LASALLE STREET
CHICAGO, IL 60603

Date Mailed: 06/13/2011

## NOTICE REGARDING CHANGE OF POWER OF ATTORNEY

This is in response to the Power of Attorney filed 05/04/2011.

- The withdrawal as attorney in this application has been accepted. Future correspondence will be mailed to the new address of record. 37 CFR 1.33.

/idingle/

---

Office of Data Management, Application Assistance Unit (571) 272-4000, or (571) 272-4200, or 1-888-786-0101

UNITED STATES PATENT AND TRADEMARK OFFICE

UNITED STATES DEPARTMENT OF COMMERCE
United States Patent and Trademark Office
Address: COMMISSIONER FOR PATENTS
P.O. Box 1450
Alexandria, Virginia 22313-1450
www.uspto.gov

| APPLICATION NUMBER | FILING OR 371(C) DATE | FIRST NAMED APPLICANT | ATTY. DOCKET NO./TITLE |
|---|---|---|---|
| 13/008,980 | 01/19/2011 | Leslie Rosenthal | 08,115-E |

**CONFIRMATION NO. 9887**

Rosenthal Collins Group, LLC
c/o Mr. Gerry Fishman, Esq.
216 W. Jackson, Suite 400
Chicago, IL 60606

**POA ACCEPTANCE LETTER**

*OC000000048068836*

Date Mailed: 06/13/2011

## NOTICE OF ACCEPTANCE OF POWER OF ATTORNEY

This is in response to the Power of Attorney filed 05/04/2011.

The Power of Attorney in this application is accepted. Correspondence in this application will be mailed to the above address as provided by 37 CFR 1.33.

/idingle/

Office of Data Management, Application Assistance Unit (571) 272-4000, or (571) 272-4200, or 1-888-786-0101

UNITED STATES PATENT AND TRADEMARK OFFICE

Commissioner for Patents
United States Patent and Trademark Office
P.O. Box 1450
Alexandria, VA 22313-1450
www.uspto.gov

ARMSTRONG TEASDALE LLP (16463)
7700 FORSYTH BOULEVARD
SUITE 1800
ST. LOUIS, MO 63105

MAILED
NOV 10 2011
OFFICE OF PETITIONS

Applicant(s): Darr, et al.
Appl. No.: 13/009,012
Filing Date: January 19, 2011
Title: FUSIBLE SWITCHING DISCONNECT MODULES AND DEVICES WITH MULTI-FUNCTIONAL TRIP MECHANISM
Attorney Docket No.: BUS-027071 CIP7
Pub. No.: US 2011/0169599 A1
Pub. Date: July 14, 2011

This is a decision on the request for correction of patent application publication under 37 CFR 1.221(b), received on July 21, 2011, for the above-identified application.

The request is DISMISSED.

Applicant requests that the application be republished because the patent application publication contains a material error, wherein on page 1 of the specification, paragraph 4, 2nd sentence, reads "Fuse terminals typically form an or a combination of components arranged in an electrical circuit" and should read "Fuse terminals typically form an electrical connection between an electrical power source and an electrical component or a combination of components arranged in an electrical circuit."

37 CFR 1.221 (b) is applicable "only when the Office makes a material mistake which is apparent from Office records.... Any request for a corrected publication or revised patent application publication other than provided as provided in paragraph (a) of this section must be filed within two months from the date of the patent application publication. This period is not extendable." A material mistake must affect the public's ability to appreciate the technical disclosure of the patent application publication, to determine the scope of the patent application publication, or to determine the scope of the provisional rights that an applicant may seek to enforce upon issuance of a patent. [1]

The error noted by requestor is an Office error but is not a material Office error as defined under 37 CFR 1.221(b). In particular, the error does not affect the interpretation of the published claims. See MPEP 1130 B.

[1]Changes to Implement Eighteen-Month Publication of Patent Applications, 65 FR 57023, 57038 (Sept. 20, 2000), 1239, Off. Gaz. Pat. Office Notices 63, 75 (Oct. 10, 2000) (final rule).

The applicant is advised that a "request for republication of an application previously published" may be filed under 37 CFR 1.221(a). Such a request for republication "must include a copy of the application compliance with the Office's electronic filing system requirements and be accompanied by the publication fee set forth in § 1.18(d) and the processing fee set forth in § 1.17(i)." If the request for republication does not comply with the electronic filing system requirements, the republication will not take place and the publication fee set forth in § 1.18(d) will be refunded. The processing fee will be retained.

A guide for filing a request for a Pre-Grant Publication, such as a request for republication, may be found on the link below:

http://www.uspto.gov/patents/process/file/efs/guidance/index.jsp

http://www.uspto.gov/ebc/portal/efs/pgpub_quickstart.pdf

Any request for republication under 37 CFR 1.221(a), must be submitted via the EFS system, as a "Pre-Grant Publication".

Inquiries relating to this matter may be directed to Sherry D. Brinkley at (571) 272-3204.

/Christopher Bottorff/

Christopher Bottorff
Petitions Examiner
Office of Petitions

**Doc Code: PPH.PCT.652**
**Document Description: Petition to make special under PCT-Patent Pros Hwy**

PTO/SB/20PCT-EP (05-10)
Approved for use through 01/31/2012. OMB 0651-0058
U.S. Patent and Trademark Office; U. S. DEPARTMENT OF COMMERCE
Under the Paperwork Reduction Act of 1995, no persons are required to respond to a collection of information unless it displays a valid OMB control number.

# REQUEST FOR PARTICIPATION IN THE PATENT COOPERATION TREATY - PATENT PROSECUTION HIGHWAY (PCT-PPH) PILOT PROGRAM BETWEEN THE EUROPEAN PATENT OFFICE (EPO) AND THE USPTO

| | | | |
|---|---|---|---|
| Application No: | 13/009,104 | Filing date: | 19 January 2011 |
| First Named Inventor: | Ball, Geoffrey R. | | |
| Title of the Invention: | Incus Replacement Partial Ossicular Replacement Prosthesis | | |

**THIS REQUEST FOR PARTICIPATION IN THE PCT-PPH PILOT PROGRAM ALONG WITH THE REQUIRED DOCUMENTS MUST BE SUBMITTED VIA EFS-WEB. INFORMATION REGARDING EFS-WEB IS AVAILABLE AT HTTP://WWW.USPTO.GOV/EBC/EFS_HELP.HTML**

**APPLICANT HEREBY REQUESTS PARTICIPATION IN THE PCT-PPH PROGRAM AND PETITIONS TO MAKE THE ABOVE-IDENTIFIED APPLICATION SPECIAL UNDER THE PCT-PPH PROGRAM.**

The above-identified application is (1) a national stage entry of the corresponding PCT application, or (2) a national stage entry of another PCT application which claims priority to the corresponding PCT application, or (3) a national application that claims domestic/ foreign priority to the corresponding PCT application, or (4) a national application which forms the basis for the priority claim in the corresponding PCT application, or (5) a continuing application of a U.S. application that satisfies one of (1) to (4) above, or (6) a U.S. application that claims domestic benefit to a U.S. provisional application which forms the basis for the priority claim in the corresponding PCT application.

**The corresponding PCT application number(s) is/are:** PCT/US11/021637

**The international filing date of the corresponding PCT application(s) is/are:** 19 January 2011

**I. List of Required Documents:**

a. **A copy of the latest international work product (WO/ISA, WO/IPEA, or IPER) in the above–identified corresponding PCT application(s)**

☒ Is attached

☐ Is not attached because the document is already in the U.S. application.

b. **A copy of all claims which were indicated as having novelty, inventive step and industrial applicability in the above-identified corresponding PCT application(s).**

☒ Is attached.

☐ Is not attached because the document is already in the U.S. application.

c. **English translations of the documents in a. and b. above are attached (if the documents are not in the English language). A statement that the English translation is accurate is attached for the document in b. above.**



This collection of information is required by 35 U.S.C. 119, 37 CFR 1.55, and 37 CFR 1.102(d). The information is required to obtain or retain a benefit by the public, which is to file (and by the USPTO to process) an application. Confidentiality is governed by 35 U.S.C. 122 and 37 CFR 1.11 and 1.14. This collection is estimated to take 2 hours to complete, including gathering, preparing, and submitting the completed application form to the USPTO. Time will vary depending upon the individual case. Any comments on the amount of time you require to complete this form and/or suggestions for reducing this burden should be sent to the Chief Information Officer, U.S. Patent and Trademark Office, U.S. Department of Commerce, P.O. Box 1450, Alexandria, VA 22313-1450. DO NOT SEND FEES OR COMPLETED FORMS TO THIS ADDRESS.

PTO/SB/20PCT-EP (05-10)
Approved for use through 01/31/2012. OMB 0651-0058
U.S.Patent and Trademark Office; U.S. DEPARTMENT OF COMMERCE
Under the Paperwork Reduction Act of 1995, no persons are required to respond to a collection of information unless it displays a valid OMB control number.

# REQUEST FOR PARTICIPATION IN THE PCT-PPH PILOT PROGRAM BETWEEN THE EPO AND THE USPTO

(continued)

| | |
|---|---|
| Application No.: | 13/009,104 |
| First Named Inventor: | Ball, Geoffrey R. |

d. **(1) An information disclosure statement listing the documents cited in the international work products (ISR, WO/ISA, WO/IPEA, IPER) of the corresponding PCT application.**

☒ Is attached

☐ Has already been filed in the above-identified U.S. application on _____

**(2) Copies of all documents (except) for U.S. patents or U.S. patent application publications)**

☒ Are attached.

☐ Have already been filed in the above-identified U.S. application on _____

**II. Claims Correspondence Table:**

| Claims in US Application | Patentable Claims in the corresponding PCT Application | Explanation regarding the correspondence |
|---|---|---|
| Claims 1 - 15 | Claims 1 - 15 | Claims are identical |
| | | |
| | | |
| | | |
| | | |
| | | |
| | | |
| | | |
| | | |
| | | |
| | | |
| | | |
| | | |
| | | |
| | | |
| | | |
| | | |
| | | |

**III. All the claims in the US application sufficiently correspond to the patentable claims in the corresponding PCT application.**

| | |
|---|---|
| Signature /Jay Sandvos, #43,900/ | Date May 2, 2011 |
| Name (Print/Typed) Jay Sandvos | Registration Number 43,900 |

# Privacy Act Statement

The **Privacy Act of 1974 (P.L. 93-579)** requires that you be given certain information in connection with your submission of the attached form related to a patent application or patent. Accordingly, pursuant to the requirements of the Act, please be advised that: (1) the general authority for the collection of this information is 35 U.S.C. 2(b)(2); (2) furnishing of the information solicited is voluntary; and (3) the principal purpose for which the information is used by the U.S. Patent and Trademark Office is to process and/or examine your submission related to a patent application or patent. If you do not furnish the requested information, the U.S. Patent and Trademark Office may not be able to process and/or examine your submission, which may result in termination of proceedings or abandonment of the application or expiration of the patent.

The information provided by you in this form will be subject to the following routine uses:

1. The information on this form will be treated confidentially to the extent allowed under the Freedom of Information Act (5 U.S.C. 552) and the Privacy Act (5 U.S.C 552a). Records from this system of records may be disclosed to the Department of Justice to determine whether disclosure of these records is required by the Freedom of Information Act.
2. A record from this system of records may be disclosed, as a routine use, in the course of presenting evidence to a court, magistrate, or administrative tribunal, including disclosures to opposing counsel in the course of settlement negotiations.
3. A record in this system of records may be disclosed, as a routine use, to a Member of Congress submitting a request involving an individual, to whom the record pertains, when the individual has requested assistance from the Member with respect to the subject matter of the record.
4. A record in this system of records may be disclosed, as a routine use, to a contractor of the Agency having need for the information in order to perform a contract. Recipients of information shall be required to comply with the requirements of the Privacy Act of 1974, as amended, pursuant to 5 U.S.C. 552a(m).
5. A record related to an International Application filed under the Patent Cooperation Treaty in this system of records may be disclosed, as a routine use, to the International Bureau of the World Intellectual Property Organization, pursuant to the Patent Cooperation Treaty.
6. A record in this system of records may be disclosed, as a routine use, to another federal agency for purposes of National Security review (35 U.S.C. 181) and for review pursuant to the Atomic Energy Act (42 U.S.C. 218(c)).
7. A record from this system of records may be disclosed, as a routine use, to the Administrator, General Services, or his/her designee, during an inspection of records conducted by GSA as part of that agency's responsibility to recommend improvements in records management practices and programs, under authority of 44 U.S.C. 2904 and 2906. Such disclosure shall be made in accordance with the GSA regulations governing inspection of records for this purpose, and any other relevant ( *i.e.*, GSA or Commerce) directive. Such disclosure shall not be used to make determinations about individuals.
8. A record from this system of records may be disclosed, as a routine use, to the public after either publication of the application pursuant to 35 U.S.C. 122(b) or issuance of a patent pursuant to 35 U.S.C. 151. Further, a record may be disclosed, subject to the limitations of 37 CFR 1.14, as a routine use, to the public if the record was filed in an application which became abandoned or in which the proceedings were terminated and which application is referenced by either a published application, an application open to public inspection or an issued patent.
9. A record from this system of records may be disclosed, as a routine use, to a Federal, State, or local law enforcement agency, if the USPTO becomes aware of a violation or potential violation of law or regulation.

UNITED STATES PATENT AND TRADEMARK OFFICE

UNITED STATES DEPARTMENT OF COMMERCE
United States Patent and Trademark Office
Address: COMMISSIONER FOR PATENTS
P.O. Box 1450
Alexandria, Virginia 22313-1450
www.uspto.gov

| APPLICATION NO. | FILING DATE | FIRST NAMED INVENTOR | ATTORNEY DOCKET NO. | CONFIRMATION NO. |
|---|---|---|---|---|
| 13/009,104 | 01/19/2011 | Geoffrey R. Ball | 3435/167 | 1131 |

2101 7590 05/04/2011

Sunstein Kann Murphy & Timbers LLP
125 SUMMER STREET
BOSTON, MA 02110-1618

| EXAMINER | |
|---|---|
| ART UNIT | PAPER NUMBER |
| 3735 | |

| NOTIFICATION DATE | DELIVERY MODE |
|---|---|
| 05/04/2011 | ELECTRONIC |

**Please find below and/or attached an Office communication concerning this application or proceeding.**

The time period for reply, if any, is set in the attached communication.

Notice of the Office communication was sent electronically on above-indicated "Notification Date" to the following e-mail address(es):

PATENTS@SUNSTEINLAW.COM

UNITED STATES PATENT AND TRADEMARK OFFICE

Commissioner for Patents
United States Patent and Trademark Office
P.O. Box 1450
Alexandria, VA 22313-1450
www.uspto.gov

Sunstein Kann Murphy & Timbers LLP
125 SUMMER STREET
BOSTON MA 02110-1618

| | |
|---|---|
| In re Application of | : |
| BALL, GEOFFREY R. et al | : DECISION ON REQUEST TO |
| Application No. 13/009,104 | : PARTICIPATE IN PATENT |
| Filed: Jan. 19, 2011 | : PROSECUTION HIGHWAY |
| Attorney Docket No. 3435/167 | : PILOT PROGRAM AND PETITION |
| For: MEDIA SYSTEM AND METHOD | : TO MAKE SPECIAL UNDER |
| | : 37 CFR 1.102(a) |

This is a decision on the request to participate in the Patent Prosecution Highway (PPH) program and the petition under 37 CFR 1.102(a), filed may 2, 2011 to make the above-identified application special.

The request and petition are Dismissed.

A grantable request to participate in the PPH program and petition to make special require:
(1) The U.S. application must disclose an eligible relationship to one or more PCT applications filed in the JPO, EPO, KIPO or USPTO;
(2) Applicant must submit a copy of the allowable/patentable claim(s) from the PCT application(s) latest international work product (the written opinion or the IPER) along with an English translation thereof and a statement that the English translation is accurate;
(3) All the claims in the U.S. application must sufficiently correspond or be amended to sufficiently correspond to the allowable/patentable claim(s) in the PCT application(s);
(4) Examination of the U.S. application has not begun;
(5) Applicant must submit a copy of the latest international work product from the PCT application containing the allowable/patentable claim(s) along with an English translation thereof and a statement that the English translation is accurate; and
(6) Applicant must submit an IDS listing the documents cited by the PCT examiner in the international work product along with copies of documents except U.S. patents or U.S. patent application publications.

The request to participate in the PPH program and petition met all conditions except Item #5 above.

The International Search Report filed of April 11, 2011 does not include any positive Opinion as to the patentability of the claims 1-15. The international Search Opinion showing the patentability of claims 1-15 is required.

Applicant is encouraged to cite and submit all relevant prior art references, if any, to facilitate examination in this application. Currently, this application is undergoing pre-examination processing.

Applicant is given a time period of **ONE MONTH or THIRTY DAYS**, whichever is longer, from the mailing date of this decision to correct the deficiencies. **NO EXTENSION OF TIME UNDER 37 CFR 1.136 IS PERMITTED.** If the deficiencies are not corrected with the time period given, the application will await action in its regular turn. Response must be filed via EFS-Web.

Telephone inquiries concerning this decision should be directed to Henry C. Yuen at 571-272-4856.

Petition is **dismissed**.

/Henry C. Yuen/

Henry C. Yuen, Special Programs Examiner
Technology Center 3700 – Mechanical Engineering,
Manufacturing and Products
571-272-4856

Attorney Docket: **3435/167**
Application 13/009,104
Filed January 19, 2011

IN THE UNITED STATES PATENT AND TRADEMARK OFFICE

| | | | |
|---|---|---|---|
| Applicant: | Ball et al. | Atty Docket: | 3435/167 |
| Serial No.: | 13/009,104 | Art Unit: | 3735 |
| Filing Date: | January 19, 2011 | Examiner: | N/A |
| Invention: | Incus Replacement Partial Ossicular Replacement Prosthesis | | |

---

**FILED BY USPTO ELECTRONIC FILING SYSTEM**

---

**Response to Decision on Request to Participate in Patent Prosecution Highway Pilot Program and Petition to make Special Under 37 CFR 1.102(a)**

Dear Sir:

In Response to Decision on Request to Participate in Patent Prosecution Highway Pilot Program and Petition to make Special Under 37 CFR 1.102(a) mailed on May 4, 2011, a copy of which is attached, Applicant submits herewith the following in order to correct the deficiencies in our filing of May 2, 2011:

**International Search Report and Written Opinion mailed on May 12, 2011 showing the patentability of Claims 1-15.**

Applicant notes that the original petition filed on May 2, 2011 met all conditions except for the submission of this outstanding document.

Attorney Docket: **3435/167**
Application 13/009,104
Filed January 19, 2011

Please charge any fees that may be due to Deposit Account No. 19-4972.

Respectfully submitted,

/ Jay Sandvos, #43,900 /
Attorney for Applicant

SUNSTEIN KANN MURPHY & TIMBERS LLP
125 Summer Street
Boston, MA 02110-1618
Tel: (617) 443-9292
Fax: (617) 443-0004

03435/00167 1458235.1

UNITED STATES PATENT AND TRADEMARK OFFICE

UNITED STATES DEPARTMENT OF COMMERCE
United States Patent and Trademark Office
Address: COMMISSIONER FOR PATENTS
P.O. Box 1450
Alexandria, Virginia 22313-1450
www.uspto.gov

| APPLICATION NO. | FILING DATE | FIRST NAMED INVENTOR | ATTORNEY DOCKET NO. | CONFIRMATION NO. |
|---|---|---|---|---|
| 13/009,104 | 01/19/2011 | Geoffrey R. Ball | 3435/167 | 1131 |

2101 7590 05/04/2011
Sunstein Kann Murphy & Timbers LLP
125 SUMMER STREET
BOSTON, MA 02110-1618

| EXAMINER | |
|---|---|
| ART UNIT | PAPER NUMBER |
| 3735 | |

| NOTIFICATION DATE | DELIVERY MODE |
|---|---|
| 05/04/2011 | ELECTRONIC |

**Please find below and/or attached an Office communication concerning this application or proceeding.**

The time period for reply, if any, is set in the attached communication.

Notice of the Office communication was sent electronically on above-indicated "Notification Date" to the following e-mail address(es):

PATENTS@SUNSTEINLAW.COM

UNITED STATES PATENT AND TRADEMARK OFFICE

Commissioner for Patents
United States Patent and Trademark Office
P.O. Box 1450
Alexandria, VA 22313-1450
www.uspto.gov

Sunstein Kann Murphy & Timbers LLP
125 SUMMER STREET
BOSTON MA 02110-1618

| | |
|---|---|
| In re Application of | : |
| BALL, GEOFFREY R. et al | : DECISION ON REQUEST TO |
| Application No. 13/009,104 | : PARTICIPATE IN PATENT |
| Filed: Jan. 19, 2011 | : PROSECUTION HIGHWAY |
| Attorney Docket No. 3435/167 | : PILOT PROGRAM AND PETITION |
| For: MEDIA SYSTEM AND METHOD | : TO MAKE SPECIAL UNDER |
| | : 37 CFR 1.102(a) |

This is a decision on the request to participate in the Patent Prosecution Highway (PPH) program and the petition under 37 CFR 1.102(a), filed may 2, 2011 to make the above-identified application special.

The request and petition are Dismissed.

A grantable request to participate in the PPH program and petition to make special require:
(1) The U.S. application must disclose an eligible relationship to one or more PCT applications filed in the JPO, EPO, KIPO or USPTO;
(2) Applicant must submit a copy of the allowable/patentable claim(s) from the PCT application(s) latest international work product (the written opinion or the IPER) along with an English translation thereof and a statement that the English translation is accurate;
(3) All the claims in the U.S. application must sufficiently correspond or be amended to sufficiently correspond to the allowable/patentable claim(s) in the PCT application(s);
(4) Examination of the U.S. application has not begun;
(5) Applicant must submit a copy of the latest international work product from the PCT application containing the allowable/patentable claim(s) along with an English translation thereof and a statement that the English translation is accurate; and
(6) Applicant must submit an IDS listing the documents cited by the PCT examiner in the international work product along with copies of documents except U.S. patents or U.S. patent application publications.

The request to participate in the PPH program and petition met all conditions except Item #5 above.

The International Search Report filed of April 11, 2011 does not include any positive Opinion as to the patentability of the claims 1-15. The international Search Opinion showing the patentability of claims 1-15 is required.

Applicant is encouraged to cite and submit all relevant prior art references, if any, to facilitate examination in this application. Currently, this application is undergoing pre-examination processing.

Applicant is given a time period of **ONE MONTH or THIRTY DAYS**, whichever is longer, from the mailing date of this decision to correct the deficiencies. **NO EXTENSION OF TIME UNDER 37 CFR 1.136 IS PERMITTED.** If the deficiencies are not corrected with the time period given, the application will await action in its regular turn. Response must be filed via EFS-Web.

Telephone inquiries concerning this decision should be directed to Henry C. Yuen at 571-272-4856.

Petition is **dismissed**.

/Henry C. Yuen/

Henry C. Yuen, Special Programs Examiner
Technology Center 3700 – Mechanical Engineering,
Manufacturing and Products
571-272-4856

UNITED STATES PATENT AND TRADEMARK OFFICE

UNITED STATES DEPARTMENT OF COMMERCE
United States Patent and Trademark Office
Address: COMMISSIONER FOR PATENTS
P.O. Box 1450
Alexandria, Virginia 22313-1450
www.uspto.gov

| APPLICATION NO. | FILING DATE | FIRST NAMED INVENTOR | ATTORNEY DOCKET NO. | CONFIRMATION NO. |
|---|---|---|---|---|
| 13/009,104 | 01/19/2011 | Geoffrey R. Ball | 3435/167 | 1131 |

2101 7590 05/23/2011
Sunstein Kann Murphy & Timbers LLP
125 SUMMER STREET
BOSTON, MA 02110-1618

| EXAMINER | |
|---|---|
| ART UNIT | PAPER NUMBER |
| 3735 | |

| NOTIFICATION DATE | DELIVERY MODE |
|---|---|
| 05/23/2011 | ELECTRONIC |

**Please find below and/or attached an Office communication concerning this application or proceeding.**

The time period for reply, if any, is set in the attached communication.

Notice of the Office communication was sent electronically on above-indicated "Notification Date" to the following e-mail address(es):

PATENTS@SUNSTEINLAW.COM

UNITED STATES PATENT AND TRADEMARK OFFICE

Commissioner for Patents
United States Patent and Trademark Office
P.O. Box 1450
Alexandria, VA 22313-1450
www.uspto.gov

Sunstein Kann Murphy & Timbers LLP
125 SUMMER STREET
BOSTON MA 02110-1618

| | |
|---|---|
| In re Application of | : |
| BALL, GEOFFREY R. et al | : DECISION ON REQUEST TO |
| Application No. 13/009,104 | : PARTICIPATE IN PATENT |
| Filed: Jan. 19, 2011 | : PROSECUTION HIGHWAY |
| Attorney Docket No. 3435/167 | : PILOT PROGRAM AND PETITION |
| For: MEDIA SYSTEM AND METHOD | : TO MAKE SPECIAL UNDER |
| | : 37 CFR 1.102(a) |

This is a decision on the request to participate in the Patent Prosecution Highway (PPH) program and the petition under 37 CFR 1.102(a), filed May 19, 2011 to make the above-identified application special.

The request and petition are granted.

A grantable request to participate in the PPH program and petition to make special require:
(1) The U.S. application must disclose an eligible relationship to one or more PCT applications filed in the JPO, EPO, KIPO or USPTO;
(2) Applicant must submit a copy of the allowable/patentable claim(s) from the PCT application(s) latest international work product (the written opinion or the IPER) along with an English translation thereof and a statement that the English translation is accurate;
(3) All the claims in the U.S. application must sufficiently correspond or be amended to sufficiently correspond to the allowable/patentable claim(s) in the PCT application(s);
(4) Examination of the U.S. application has not begun;
(5) Applicant must submit a copy of the latest international work product from the PCT application containing the allowable/patentable claim(s) along with an English translation thereof and a statement that the English translation is accurate; and
(6) Applicant must submit an IDS listing the documents cited by the PCT examiner in the international work product along with copies of documents except U.S. patents or U.S. patent application publications.

In light of the petition being properly submitted, the request to participate in the PPH program and the petition comply with the above requirements. Accordingly, the above-identified application has been accorded "special" status.

The applicant is encouraged to cite and submit all relevant prior art references, if any, to facilitate examination in this application.

Other inquiries concerning the examination or status of the application should be directed to Chuck Marmor, the SPE of Art Unit 3735 at 571-272-4730 for Class 600/25 and also accessible in the PAIR system at http://www.uspto.gov/ebc.index.html.

All other inquiries concerning the examination or status of the application should be directed to the Patent Application Information Retrieval (PAIR) system.

This application will be forwarded and docketed to an examiner for action on the merits commensurate with this decision.

Telephone inquiries concerning this decision should be directed to Henry C. Yuen, at 571-272-4856.

The petition is **granted.**

/Henry C. Yuen/

_____

Henry C. Yuen, Special Programs Examiner
Technology Center 3700 – Mechanical Engineering,
Manufacturing and Products
571-272-4856

Doc Code: PPH.PCT.652
Document Description: Petition to make special under PCT-Patent Pros Hwy

PTO/SB/20PCT-KR (06-10)
Approved for use through 01/31/2012. OMB 0651-0058
U.S. Patent and Trademark Office; U. S. DEPARTMENT OF COMMERCE
Under the Paperwork Reduction Act of 1995, no persons are required to respond to a collection of information unless it displays a valid OMB control number.

# REQUEST FOR PARTICIPATION IN THE PATENT COOPERATION TREATY - PATENT PROSECUTION HIGHWAY (PCT-PPH) PILOT PROGRAM BETWEEN THE KOREAN INTELLECTUAL PROPERTY OFFICE (KIPO) AND THE USPTO

| | | | |
|---|---|---|---|
| Application No: | 13/009,162 | Filing date: | 01-19-2011 |
| First Named Inventor: | Mike Lindelsee | | |
| Title of the Invention: | Token Based Transaction Authentication | | |

**THIS REQUEST FOR PARTICIPATION IN THE PCT-PPH PILOT PROGRAM ALONG WITH THE REQUIRED DOCUMENTS MUST BE SUBMITTED VIA EFS-WEB. INFORMATION REGARDING EFS-WEB IS AVAILABLE AT HTTP://WWW.USPTO.GOV/EBC/EFS_HELP.HTML**

**APPLICANT HEREBY REQUESTS PARTICIPATION IN THE PCT-PPH PROGRAM AND PETITIONS TO MAKE THE ABOVE-IDENTIFIED APPLICATION SPECIAL UNDER THE PCT-PPH PROGRAM.**

The above-identified application is (1) a national stage entry of the corresponding PCT application, or (2) a national stage entry of another PCT application which claims priority to the corresponding PCT application, or (3) a national application that claims domestic/ foreign priority to the corresponding PCT application, or (4) a national application which forms the basis for the priority claim in the corresponding PCT application, or (5) a continuing application of a U.S. application that satisfies one of (1) to (4) above, or (6) a U.S. application that claims domestic benefit to a U.S. provisional application which forms the basis for the priority claim in the corresponding PCT application.

**The corresponding PCT application number(s) is/are:** PCT/US2011/021737

**The international filing date of the corresponding PCT application(s) is/are:** 01-19-2011

**I. List of Required Documents:**

a. **A copy of the latest international work product (WO/ISA, WO/IPEA, or IPER) in the above-identified corresponding PCT application(s)**

☑ Is attached.

☐ Is not attached because the document is already in the U.S. application.

b. **A copy of all claims which were indicated as having novelty, inventive step and industrial applicability in the above-identified corresponding PCT application(s).**

☑ Is attached.

☐ Is not attached because the document is already in the U.S. application.

c. **English translations of the documents in a. and b. above are attached (if the documents are not in the English language). A statement that the English translation is accurate is attached for the document in b. above.**



This collection of information is required by 35 U.S.C. 119, 37 CFR 1.55, and 37 CFR 1.102(d). The information is required to obtain or retain a benefit by the public, which is to file (and by the USPTO to process) an application. Confidentiality is governed by 35 U.S.C. 122 and 37 CFR 1.11 and 1.14. This collection is estimated to take 2 hours to complete, including gathering, preparing, and submitting the completed application form to the USPTO. Time will vary depending upon the individual case. Any comments on the amount of time you require to complete this form and/or suggestions for reducing this burden should be sent to the Chief Information Officer, U.S. Patent and Trademark Office, U.S. Department of Commerce, P.O. Box 1450, Alexandria, VA 22313-1450. DO NOT SEND FEES OR COMPLETED FORMS TO THIS ADDRESS.

PTO/SB/20PCT-KR (06-10)
Approved for use through 01/31/2012. OMB 0651-0058
U.S.Patent and Trademark Office; U.S. DEPARTMENT OF COMMERCE
Under the Paperwork Reduction Act of 1995, no persons are required to respond to a collection of information unless it displays a valid OMB control number.

# REQUEST FOR PARTICIPATION IN THE PCT-PPH PILOT PROGRAM BETWEEN THE KIPO AND THE USPTO

(continued)

| | |
|---|---|
| Application No.: | 13/009,162 |
| First Named Inventor: | Mike Lindelsee |

d. **(1) An information disclosure statement listing the documents cited in the international work products (ISR, WO/ISA, WO/IPEA, IPER) of the corresponding PCT application.**

☐ Is attached

☑ Has already been filed in the above-identified U.S. application on 01-04-2012

**(2) Copies of all documents (except) for U.S. patents or U.S. patent application publications)**

☐ Are attached.

☑ Have already been filed in the above-identified U.S. application on 01-04-2012

**II. Claims Correspondence Table:**

| Claims in US Application | Patentable Claims in the corresponding PCT Application | Explanation regarding the correspondence |
|---|---|---|
| 1-20 | 1-20 | Exact Correspondence |
| | | |
| | | |
| | | |
| | | |
| | | |
| | | |
| | | |
| | | |
| | | |
| | | |
| | | |
| | | |
| | | |
| | | |
| | | |
| | | |
| | | |
| | | |

**III. All the claims in the US application sufficiently correspond to the patentable claims in the corresponding PCT application.**

| | |
|---|---|
| Signature | Date 1-4-12 |
| Name (Print/Typed) Patrick R. Jewik | Registration Number 40,456 |

UNITED STATES PATENT AND TRADEMARK OFFICE

Commissioner for Patents
United States Patent and Trademark Office
P.O. Box 1450
Alexandria, VA 22313-1450
www.uspto.gov

**KILPATRICK TOWNSEND & STOCKTON LLP/VISA**
**TWO EMBARCADERO CENTER, 8TH FLOOR**
**SAN FRANCISCO CA 94111**

**MAILED**

MAR 19 2012

**OFFICE OF PETITIONS**

In re Application of
Mike LINDELSEE et al.
Application No.: 13/009,162
Filed: January 19, 2011, 2011
Attorney Docket No. 79900-788280(060620US)
For: TOKEN BASED TRANSACTION AUTHENTICATION

: DECISION ON REQUEST TO
: PARTICIPATE IN THE PATENT
: PROSECUTION HIGHWAY
: PROGRAM AND PETITION
: TO MAKE SPECIAL UNDER
: 37 CFR 1.102(a)

This is a decision on the request to participate in the PCT Patent Prosecution Highway (PCT-PPH) pilot program and the petition under 37 CFR 1.102(a), filed on January 04, 2012 to make the above-identified application special.

The request and petition are **DISMISSED**.

**Discussion**

A grantable request to participate in the PCT-PPH pilot program and petition to make special require:

(1) The U.S. application must have an eligible relationship to one or more PCT applications where the ISA or IPEA are the JPO, EPO, KIPO, IPAU, Russia, Spain, Finland, Austria, or USPTO;

(2) At least one claim in the PCT application has novelty, inventive step, and industrial applicability and must be free of any observations in Box VIII in the latest work product in the international stage or applicant must identify and explain why the claim(s) is/are not subject to the observation in Box VIII;

(3) Applicant must submit a copy of the claim(s) from the PCT application(s) that have novelty, inventive step, and industrial applicability along with an English translation thereof and a statement that the English translation is accurate, if the claims are not in the English language;

(4) All the claims in the U.S. application must sufficiently correspond or be amended to sufficiently correspond to the claim(s) that have novelty, inventive step, and industrial applicability in the PCT application(s);

(5) Examination of the U.S. application has not begun;

(6) Applicant must submit a copy of the latest international work product from the PCT application indicating that the claim(s) have novelty, inventive step, and industrial applicability along with an English translation thereof.

(7) Applicant must submit an IDS listing the documents cited by the PCT examiner in the international work product along with copies of documents except U.S. patents or U.S. patent application publications.

(8) Applicant is required to submit a claims correspondence table in English which indicates how all the claims in the U.S. application correspond to the claims indicated as having novelty, inventive step and industrial applicability in the latest international work product.

Requirements (2-8) above are considered to have been met. However, the request to participate in the PPH pilot program and petition fail to meet requirements (1).

**Regarding the requirement of condition (1), the U.S. application must have an eligible relationship to one or more PCT applications. A claim for priority to the KIPO application has not been made in the U.S. application.**

Applicant is given **ONE** opportunity within a time period of **ONE MONTH or THIRTY DAYS**, whichever is longer, from the mailing date of this decision to correct the deficiencies. **NO EXTENSION OF TIME UNDER 37 CFR 1.136 IS PERMITTED.** If the deficiencies are not corrected with the time period given, the application will await action in its regular turn.

Response must be filed via the Electronic Filing System (EFS) using the document description: Petition to make special under PCT – Patent Pros Hwy. Any preliminary amendments and IDS submitted with the PPH documents must be separately indexed as a preliminary amendment and IDS, respectively.

Telephone inquiries concerning this decision should be directed to Michelle R. Eason at 571-272-4231.

All other inquiries concerning the examination or status of the application is accessible in the PAIR system at http://www.uspto.gov/ebc/index.html.

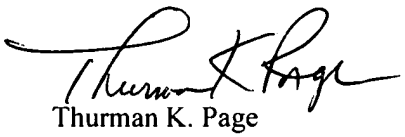

Thurman K. Page
Petitions Examiner
Office of Petitions

UNITED STATES PATENT AND TRADEMARK OFFICE

Commissioner for Patents
United States Patent and Trademark Office
P.O. Box 1450
Alexandria, VA 22313-1450
www.uspto.gov

**Apple Inc.**
**c/o Novak Druce + Quigg LLP**
**1000 Louisiana Street**
**Fifty-Third Floor**
**Houston TX 77002**

MAILED

APR 03 2012

OFFICE OF PETITIONS

In re Application of
AALTONEN et al.
Application No.: 13/009,180
Filing Date: January 19, 2011
Docket No.: **20182.0006.CNUS00 [P1158**
For: **SYSTEM AND METHOD OF CONTROLLING DELIVERY OF MULTIMEDIA MESSAGES**

DECISION

This is a decision on the petition filed 06 September 2011, pursuant to 37 C.F.R. 1.47(a).

The petition is **GRANTED** as discussed below.

A review of the application file reveals that the present petition was accompanied by, *inter alia*, an acceptable showing of inventor Timo Ahopelto's refusal to join in the filing of this application. Therefore the requirements of 37 CFR 1.47(a) have been satisfied.

As provided in 37 CFR 1.47(a), a notice of the filing of this application will be forwarded to the non-signing inventor at the last known address of record as set forth in the present papers, and a notice of the filing of the application under 37 CFR 1.47(a) will be published in the Official Gazette.

Telephone inquiries regarding this decision should be directed to Jose G Dees at (571) 272-1569.

Christopher Bottorff
Petitions Examiner
Office of Petitions

UNITED STATES PATENT AND TRADEMARK OFFICE

Commissioner for Patents
United States Patent and Trademark Office
P.O. Box 1450
Alexandria, VA 22313-1450
www.uspto.gov

**HAMILTON, BROOK, SMITH & REYNOLDS, P.C.**
**530 VIRGINIA ROAD**
**P.O. BOX 9133**
**CONCORD MA 01742-9133**

**MAILED**

SEP 26 2011

**OFFICE OF PETITIONS**

| | | |
|---|---|---|
| In re Application of | : | |
| Jonathan R. Wood | : | |
| Application No. 13/009,252 | : | DECISION ON PETITION |
| Filed: January 19, 2011 | : | TO MAKE SPECIAL UNDER |
| Attorney Docket No. 3129.1001-002 | : | 37 CFR 1.102(c)(1) |
| | : | |

This is a decision on the petition under 37 CFR 1.102(c)(1), filed August 29, 2011, to make the above-identified application special based on applicant's age as set forth in M.P.E.P. § 708.02, Section IV.

The petition is **GRANTED**.

A grantable petition to make an application special under 37 CFR 1.102(c)(1) and MPEP § 708.02, Section IV: Applicant's Age must be accompanied by evidence showing that at least one of the applicants is 65 years of age, or more, such as a birth certificate or a statement by applicant. No fee is required

The instant petition includes a statement from the attorney of record declaring that he is in possession of such evidence that shows the applicant is 65 years of age or older. Accordingly, the above-identified application has been accorded "special" status.

Telephone inquiries concerning this decision should be directed to Terri Johnson at 571-272-2991.

All other inquiries concerning either the examination or status of the application should be directed to the Technology Center.

The application is being forwarded to the Technology Center Art Unit 3783 for action on the merits commensurate with this decision.

/Terri Johnson/
Terri Johnson
Petitions Examiner
Office of Petitions

UNITED STATES PATENT AND TRADEMARK OFFICE

UNITED STATES DEPARTMENT OF COMMERCE
United States Patent and Trademark Office
Address: COMMISSIONER FOR PATENTS
P.O. Box 1450
Alexandria, Virginia 22313-1450
www.uspto.gov

| APPLICATION NO. | FILING DATE | FIRST NAMED INVENTOR | ATTORNEY DOCKET NO. | CONFIRMATION NO. |
|---|---|---|---|---|
| 13/009,264 | 01/19/2011 | Takeo Tanaami | 101484 | 1428 |

7590 07/05/2011

WESTERMAN, HATTORI, DANIELS & ADRIAN, LLP
1250 CONNECTICUT AVENUE, NW
SUITE 700
WASHINGTON, DC 20036

| EXAMINER | |
|---|---|
| ART UNIT | PAPER NUMBER |
| 1773 | |
| NOTIFICATION DATE | DELIVERY MODE |
| 07/05/2011 | ELECTRONIC |

## DECISION GRANTING PETITION UNDER 37 CFR 1.138(d)

*The declaration of express abandonment is recognized*

This is in response to the petition under 37 CFR 1.138(d), requesting for a refund of any previously paid search fee and excess claims fee in the above-identified application.

The petition is granted.

The express abandonment is recognized. Any previously paid search fee and excess claims fee are hereby refunded.

Telephone inquiries should be directed to the Office of Data Management at (571) 272-4200.

Patent Publication Branch
Office of Data Management

UNITED STATES PATENT AND TRADEMARK OFFICE

Commissioner for Patents
United States Patent and Trademark Office
P.O. Box 1450
Alexandria, VA 22313-1450
www.uspto.gov

In re Application of
Christine KUSLICH

Application No. 13009285

Filed:

Attorney Docket No. 37901-706.302

:DECISION ON PETITION TO MAKE SPECIAL
:UNDER 37 CFR 1.102(c)(1)

This is a decision on the electronic petition under 37 CFR 1.102 (c)(1), filed 20-JAN-2011 to make the above-identified application special based on applicant's age as set forth in MPEP § 708.02, Section IV.

The petition is **GRANTED**.

A grantable petition to make an application special under 37 CFR 1.102(c)(1), MPEP § 708.02, Section IV: Applicant's Age must include a statement by applicant or a registered practitioner having evidence that applicant is at least 65 years of age. No fee is required.

Accordingly, the above-identified application has been accorded "special" status and will be taken up for action by the examiner upon the completion of all pre-examination processing.

Telephone inquiries concerning this electronic decision should be directed to the Electronic Business Center at 866-217-9197.

All other inquiries concerning either the examination or status of the application should be directed to the Technology Center.

UNITED STATES PATENT AND TRADEMARK OFFICE

UNITED STATES DEPARTMENT OF COMMERCE
United States Patent and Trademark Office
Address: COMMISSIONER FOR PATENTS
P.O. Box 1450
Alexandria, Virginia 22313-1450
www.uspto.gov

| APPLICATION NO. | FILING DATE | FIRST NAMED INVENTOR | ATTORNEY DOCKET NO. | CONFIRMATION NO. |
|---|---|---|---|---|
| 13/009,312 | 01/19/2011 | Takeshi KATAYAMA | 0303-0516PUS1 | 1511 |

7590 01/23/2012

BIRCH STEWART KOLASCH & BIRCH
PO BOX 747
FALLS CHURCH, VA 22040-0747

| EXAMINER | |
|---|---|
| HASKINS, TWYLER LAMB | |

| ART UNIT | PAPER NUMBER |
|---|---|
| 2625 | |

| NOTIFICATION DATE | DELIVERY MODE |
|---|---|
| 01/23/2012 | ELECTRONIC |

## DECISION GRANTING PETITION UNDER 37 CFR 1.138(d)

*The declaration of express abandonment is recognized*

This is in response to the petition under 37 CFR 1.138(d), requesting for a refund of any previously paid search fee and excess claims fee in the above-identified application.

The petition is granted.

The express abandonment is recognized. Any previously paid search fee and excess claims fee are hereby refunded.

Telephone inquiries should be directed to the Office of Data Management at (571) 272-4200.

Betty Powell

Patent Publication Branch
Office of Data Management

**IN THE UNITED STATES PATENT AND TRADEMARK OFFICE**

| | |
|---|---|
| **First Named Inventor: Balaji HARIDASU** | ) |
| **Confirmation No.: 1540** | ) |
| | ) |
| **Serial No.: 13/009,326** | ) |
| | ) |
| **Filing Date: 01-19-2011** | ) |
| | ) |
| **Atty Docket No.: 246880-1 (22402-252)** | ) |

Commissioner for Patents
P.O. Box 1450
Alexandria, VA 22313-1450

**Statement Concerning the Basis for the Special Status**

SIR:

Applicant respectfully submits that Special Status is sought on the basis that the present invention materially contributes to the development of renewable energy resources or energy conservation.

Applicant respectfully submits that the present invention is directed to modular towers which may be used for wind turbines. The size of rotor blades is a factor that contributes to the energy efficiency of wind turbines. An increase in rotor blade size increases the energy production of a wind turbine. Accordingly, efforts to increase rotor blade size aid in the continuing growth of wind turbine technology and the adoption of wind energy as an alternative energy source.

As the size of wind turbines increase, particularly the size of rotor blades, so does the size of the tower required to support the wind turbine. Because of their size, such towers are often constructed on site, as the towers themselves are much larger than is practically transportable. Components used with such towers are often assembled off-site. Similar to the tower itself, transportation

logistics generally limit the storage size and/or weight of such components. Tower height is at least partially limited by the dimensions of the base of the tower. As such, a taller tower requires a correspondingly larger base to adequately support the tower structure. To enhance the overall structural integrity and to reduce on-site assembly time, it is generally desirable to assemble the components of the modular tower in as few pieces as possible. However, due to transportation limitations, the overall size of components and sections is limited. As such, the height of the tower may be limited by the size of the unitary components that can be used in light of transportation limitations. (see at least paragraphs [0002] and [0003]).

Thus, the economic benefits of increased wind turbine sizes must be weighed against these transportation and storage limitations.

The methods and modular tower components described herein facilitate construction of a modular tower. Specifically, the modular tower components and methods described herein enable construction of tower sections that are larger than unitary tower sections that are limited in size by transportation limitations. Using larger modular tower sections, structurally-sound towers having higher hub heights can be constructed. Moreover, spacer elements described herein facilitate aligning adjacent section panels together during construction, and thus, increase the structural integrity of the assembled tower. Moreover the flanges described herein that are used to connect adjacent tower sections together, facilitate reducing hoop stresses induced to the tower components. (see at least paragraph [0017]).

As compared to known unitary tower sections, the modular tower sections described herein enable construction of larger tower sections because the section panels can be transported unassembled and independently. Moreover, section panels are generally more inexpensive and simpler to manufacture than unitary tower sections. Further, the connectors described herein improve facilitating the alignment of section panels during assembly because the spacer elements and slots secure the position of the section panels during assembly. Moreover, as compared to unitary flanges, the section connectors described herein facilitate reducing hoop stresses induced to the tower sections because the section connectors are flexible with respect to one another. (see at least paragraph [0042]).

The embodiments described in the present invention facilitate the transportation of larger wind turbine towers, enabling more efficient wind turbines with larger rotor blades, by constructing the towers from components that are easily assembled on site and that are not limited by transportation limitations. By easing the known difficulties in the transportation of large wind turbine towers, the present invention materially contributes to the development of renewable energy by facilitating the production of larger wind turbines with larger rotor blades, which in turn promotes increased energy production.

The undersigned attorney may be contacted at the number below to facilitate the resolution of any matters. Please charge any fees that are incurred in connection with this Statement to deposit account no. 09-0470.

Respectfully submitted,

General Electric Company

By: /Allison W Mages/
Allison Weiner Mages
Reg. No. 57,275

Dated: August 3, 2011

GE Global Patent Operation
2 Corporate Drive, Suite 248
Shelton, CT 06484
203-944-6730

Doc Code: PET.GREEN
Document Description: Petition for Green Tech Pilot

PTO/SB/420 (03-11)

# PETITION TO MAKE SPECIAL UNDER THE GREEN TECHNOLOGY PILOT PROGRAM

| Attorney Docket Number: 246880-1 (22402-252) | Application Number (if known): 13/009,326 | Filing date: 01-19-2011 |
|---|---|---|

First Named Inventor: Balaji Haridasu

Title: Modular Tower and Methods of Assembling Same

**APPLICANT HEREBY REQUESTS TO PARTICIPATE IN THE GREEN TECHNOLOGY PILOT PROGRAM FOR THE ABOVE-IDENTIFIED APPLICATION. See Instruction Sheet on page 2.**

This petition must be timely filed electronically using the USPTO electronic filing system, EFS-Web.

1. By filing this petition:

   **Applicant is requesting early publication: Applicant hereby requests early publication under 37 CFR 1.219 and the publication fee set forth in 37 CFR 1.18(d) accompanies this request.**

2. By filing this petition: applicant is agreeing to make an election without traverse in a telephonic interview and elect an invention that meets the eligibility requirements for the Green Technology Pilot Program, if the Office determines that the claims are not obviously directed to a single invention. See Instruction Sheet.

3. This request is accompanied by statements of special status for the eligibility requirement.

4. The application contains no more than three (3) independent claims and twenty (20) total claims.

5. The application does not contain any multiple dependent claims.

6. Other attachments: Statement Concerning the Basis for the Special Status

| Signature /Allison W. Mages/ | Date July 29, 2011 |
|---|---|
| Name (Print/Typed) Allison W. Mages | Registration Number 57,275 |

*Note: Signatures of all the inventors or assignees of record of the entire interest or their representative(s) are required in accordance with 37 CFR 1.33 and 11.18. Please see 37 CFR 1.4(d) for the form of the signature. If necessary, submit multiple forms for more than one signature, see below*.*

☐ *Total of _____ forms are submitted.

*If you need assistance in completing the form, call 1-800-PTO-9199 and select option 2.*

## Instruction Sheet for
## Petition to Make Special Under the Green Technology Pilot Program
(Not to be Submitted to the USPTO)

***The following is a summary of the requirements (for more information see the notices (i) "Pilot Program for Green Technologies Including Greenhouse Gas Reduction," (ii) "Elimination of Classification Requirement in the Green Technology Pilot Program," and (iii) "Expansion and Extension of the Green Technology Pilot Program," available on the USPTO web site at http://www.uspto.gov/patents/init_events/green_tech.jsp):***

(1) The application must be a non-reissue, non-provisional utility application filed under 35 U.S.C. 111(a), or an international application that has entered the national stage in compliance with 35 U.S.C. 371, irrespective of the filing date of the application. Reexamination proceedings are excluded from this pilot program.

(2) The application must contain three or fewer independent claims and twenty or fewer total claims. The application must not contain any multiple dependent claims. For an application that contains more than three independent claims or twenty total claims, or multiple dependent claims, applicant must file a preliminary amendment in compliance with 37 CFR 1.121 to cancel the excess claims and/or the multiple dependent claims at the time the petition to make special is filed.

(3) The claims must be directed to a single invention that materially enhances the quality of the environment, or that materially contributes to: (1) the discovery or development of renewable energy resources; (2) the more efficient utilization and conservation of energy resources; or (3) green house gas emission reduction (see the eligibility requirements of sections II and III of the notice (i) cited above). The petition must include a statement that, if the USPTO determines that the claims are directed to multiple inventions (e.g., in a restriction requirement), applicant will agree to make an election without traverse in a telephonic interview, and elect an invention that meets the eligibility requirements in section II or III of the notice (i) cited above.

(4) The petition to make special must be timely filed electronically using the USPTO electronic filing system, EFS-Web, and selecting the document description of "Petition for Green Tech Pilot" on the EFS-Web screen. Applicant should use form PTO/SB/420, which is available as a Portable Document Format (PDF) fillable form in EFS-Web and on the USPTO Web site.

(5) The petition to make special must be filed at least one day prior to the date that a first Office action (which may be an Office action containing only a restriction requirement) appears in the Patent Application Information Retrieval (PAIR) system. Applicant may check the status of the application using PAIR.

(6) The petition to make special must be accompanied by a request for early publication in compliance with 37 CFR 1.219 and the publication fee set forth in 37 CFR 1.18(d).

# Privacy Act Statement

The **Privacy Act of 1974 (P.L. 93-579)** requires that you be given certain information in connection with your submission of the attached form related to a patent application or patent. Accordingly, pursuant to the requirements of the Act, please be advised that: (1) the general authority for the collection of this information is 35 U.S.C. 2(b)(2); (2) furnishing of the information solicited is voluntary; and (3) the principal purpose for which the information is used by the U.S. Patent and Trademark Office is to process and/or examine your submission related to a patent application or patent. If you do not furnish the requested information, the U.S. Patent and Trademark Office may not be able to process and/or examine your submission, which may result in termination of proceedings or abandonment of the application or expiration of the patent.

The information provided by you in this form will be subject to the following routine uses:

1. The information on this form will be treated confidentially to the extent allowed under the Freedom of Information Act (5 U.S.C. 552) and the Privacy Act (5 U.S.C 552a). Records from this system of records may be disclosed to the Department of Justice to determine whether disclosure of these records is required by the Freedom of Information Act.
2. A record from this system of records may be disclosed, as a routine use, in the course of presenting evidence to a court, magistrate, or administrative tribunal, including disclosures to opposing counsel in the course of settlement negotiations.
3. A record in this system of records may be disclosed, as a routine use, to a Member of Congress submitting a request involving an individual, to whom the record pertains, when the individual has requested assistance from the Member with respect to the subject matter of the record.
4. A record in this system of records may be disclosed, as a routine use, to a contractor of the Agency having need for the information in order to perform a contract. Recipients of information shall be required to comply with the requirements of the Privacy Act of 1974, as amended, pursuant to 5 U.S.C. 552a(m).
5. A record related to an International Application filed under the Patent Cooperation Treaty in this system of records may be disclosed, as a routine use, to the International Bureau of the World Intellectual Property Organization, pursuant to the Patent Cooperation Treaty.
6. A record in this system of records may be disclosed, as a routine use, to another federal agency for purposes of National Security review (35 U.S.C. 181) and for review pursuant to the Atomic Energy Act (42 U.S.C. 218(c)).
7. A record from this system of records may be disclosed, as a routine use, to the Administrator, General Services, or his/her designee, during an inspection of records conducted by GSA as part of that agency's responsibility to recommend improvements in records management practices and programs, under authority of 44 U.S.C. 2904 and 2906. Such disclosure shall be made in accordance with the GSA regulations governing inspection of records for this purpose, and any other relevant (*i.e.*, GSA or Commerce) directive. Such disclosure shall not be used to make determinations about individuals.
8. A record from this system of records may be disclosed, as a routine use, to the public after either publication of the application pursuant to 35 U.S.C. 122(b) or issuance of a patent pursuant to 35 U.S.C. 151. Further, a record may be disclosed, subject to the limitations of 37 CFR 1.14, as a routine use, to the public if the record was filed in an application which became abandoned or in which the proceedings were terminated and which application is referenced by either a published application, an application open to public inspection or an issued patent.
9. A record from this system of records may be disclosed, as a routine use, to a Federal, State, or local law enforcement agency, if the USPTO becomes aware of a violation or potential violation of law or regulation.

UNITED STATES PATENT AND TRADEMARK OFFICE

UNITED STATES DEPARTMENT OF COMMERCE
United States Patent and Trademark Office
Address: COMMISSIONER FOR PATENTS
P.O. Box 1450
Alexandria, Virginia 22313-1450
www.uspto.gov

| APPLICATION NO. | FILING DATE | FIRST NAMED INVENTOR | ATTORNEY DOCKET NO. | CONFIRMATION NO. |
|---|---|---|---|---|
| 13/009,326 | 01/19/2011 | Balaji Haridasu | 246880-1 (22402-252) | 1540 |

45432 7590 08/29/2011

PATRICK W. RASCHE (22402)
ARMSTRONG TEASDALE LLP
7700 Forsyth Boulevard
Suite 1800
St. Louis, MO 63105

| EXAMINER | |
|---|---|
| ART UNIT | PAPER NUMBER |
| 3633 | |

| NOTIFICATION DATE | DELIVERY MODE |
|---|---|
| 08/29/2011 | ELECTRONIC |

**Please find below and/or attached an Office communication concerning this application or proceeding.**

The time period for reply, if any, is set in the attached communication.

Notice of the Office communication was sent electronically on above-indicated "Notification Date" to the following e-mail address(es):

uspatents@armstrongteasdale.com

UNITED STATES PATENT AND TRADEMARK OFFICE

Commissioner for Patents
United States Patent and Trademark Office
P.O. Box 1450
Alexandria, VA 22313-1450
www.uspto.gov

AUG 2 6 2011

PATRICK W. RASCHE (22402)
ARMSTRONG TEASDALE LLP
7700 Forsyth Boulevard
Suite 1800
St. Louis MO 63105

| | | |
|---|---|---|
| In re Application of | : | |
| BALAJI HARIDASU et al. | : | DECISION ON PETITION |
| Application No. 13/009,326 | : | TO MAKE SPECIAL UNDER |
| Filed: January 19, 2011 | : | THE GREEN TECHNOLOGY |
| Attorney Docket No. 246880-1 (22402-252) | : | PILOT PROGRAM |

This is a decision on the petition under 37 CFR 1.102, filed August 3, 2011 to make the above-identified application special under the pilot program for applications pertaining to Green Technologies as set forth in 74 Federal Register Notice 64666 (December 8, 2009) and amended by 75 Federal Register Notice 28554 (May 21, 2010) and 75 Federal Register Notice 69049 (November 10, 2010).

The petition is **DISMISSED**.

If reconsideration of this decision is desired, a petition for reconsideration must be filed within ONE (1) MONTH OR THIRTY (30) DAYS from the mail date of this decision, whichever is longer. No extension of this time limit can be granted under 37 CFR 1.136(a) or (b). The petition for reconsideration should include an exhaustive attempt to provide the lacking item(s) noted below, since, after a decision on the petition for reconsideration, no further reconsideration or review of the matter will be undertaken by the Director.

A grantable petition to make an application special under 37 CFR 1.102 and the pilot program as set forth in 74 FR 64666 must be directed to a nonprovisional application filed under 35 USC 111(a) or be a national stage entry under 35 USC 371, exclusive of any reissue applications.

In order to qualify for special status, the following requirements must be met. 1) The application must have no more than 3 independent claims and no more than 20 total claims. 2) The application must not contain any multiple dependent claims. 3) The petition must state the basis for seeking special status, i.e., the claimed invention either: A) materially enhances the quality of the environment or B) materially contributes to: i) the discovery or development of renewable energy resources, ii) the more efficient utilization and conservation of energy resources, or iii) greenhouse gas emission reduction. 4) If the disclosure is not clear on its face that the claimed invention materially contributes under category (A) or (B), the petition must be accompanied by

a statement by the applicant, assignee, or an attorney/agent registered to practice before the Office explaining how the materiality standard is met. 5) A statement that applicant will agree to make an election without traverse in a telephonic interview if a restriction requirement is made by the examiner. 6) The petition to make special must be filed electronically. 7) The petition must be filed at least one day prior to the date that a first Office Action appears in the Patent Application Information Retrieval (PAIR) system. 8) The petition must be accompanied by a request for early publication in compliance with 37 CFR 1.219 and include the publication fee as set forth in 37 CFR 1.18(d).

The requirement for a fee for consideration of the petition to make special for applications pertaining to Green Technologies has been waived.

The petition lacks item(s) 4.

In regard to item 4, the claimed methods and modular tower assembly would not ordinarily contribute to the development of renewable energy resources -- the claimed methods and tower assembly cannot generate energy or convert kinetic energy from the wind into the mechanical energy into electrical energy. There is no evidence in the present application that the claimed methods and modular tower assembly play any role in the operation of the wind turbine to convert wind energy into mechanical energy to produce electricity. There is also no evidence in the present application that the claimed methods and modular tower assembly materially contributes to the development of renewable energy resources, or energy conservation. In addition, as the claimed tower would not necessarily be used to support a wind turbine, petitioner's assertion of the claimed tower's contribution to the development of renewable energy resources is entirely speculative.
As stated in the notice, the materiality standard does not permit an applicant to speculate as to how a hypothetical end-user might specially apply the invention in a manner than could materially contribute to category (A) or (B). *Also see MPEP § 708.02 (VI).* Accordingly, it is not agreed that the application on its face meets that materiality standard.

Any reconsideration of this decision should be submitted through the USPTO electronic filing system, EFS-Web, and selecting the document description of "Petition for Green Tech Pilot" on the EFS-Web screen.

Telephone inquiries concerning this decision should be directed to Lanna Mai at 571-272-6867.

The application is being forwarded to the Technology Center Art Unit 3633 for action in its regular turn.

/Lanna Mai/

Lanna Mai
Quality Assurance Specialist
Technology Center 3600

**IN THE UNITED STATES PATENT AND TRADEMARK OFFICE**

| | |
|---|---|
| **First Named Inventor: Balaji HARIDASU** | ) |
| **Confirmation No.: 1540** | ) |
| | ) |
| **Serial No.: 13/09,326** | ) |
| | ) |
| **Filing Date: 01-19-2011** | ) |
| | ) |
| **Atty Docket No.: 246880-1 (22402-252)** | ) |

Commissioner for Patents
P.O. Box 1450
Alexandria, VA 22313-1450

**Request for Reconsideration**

SIR:

This is responsive to the Decision on Petition, dated as mailed 29 August 2011, in the above-referenced application.

Applicant respectfully requests reconsideration of Applicant's Petition to Make Special on the basis that the present invention materially contributes to the development of renewable energy resources or energy conservation.

The Decision to Make Special Under the Green Technology Pilot Program (hereinafter "the Decision") alleges that the claimed methods and modular tower assembly would not ordinarily contribute to the development of renewable energy resources – the claimed methods and tower assembly cannot generate energy or convert kinetic energy from the wind into the mechanical energy into electrical energy. The Decision further alleges that there is no evidence in the present application that the claimed methods and modular tower assembly materially contributes to the development of renewable energy resources, or energy conservation and that, as the claimed tower would not necessarily be used to

support a wind turbine, the assertion of the claimed tower's contribution to the development of renewable energy resources is entirely speculative. Applicant does not agree with the comments made in the Decision.

Applicant respectfully submits that the use of the claimed invention with a wind turbine is not merely speculative. Applicant respectfully submits that the present invention is generally directed to modular towers which may be used for wind turbines. Figure 1 of the application, for example, illustrates an exemplary wind turbine, while several of the other figures illustrate portions of a tower section that may be used with the wind turbine shown in Figure 1.

Applicant respectfully submits that the Federal Register states that patent applications are eligible for the Green Technology Pilot Program if the applications are for inventions that materially contribute to: (1) The discovery or development of renewable energy resources; (2) the more efficient utilization and conservation of energy resources; or (3) the reduction of greenhouse gas emissions. The requirements as set forth in the Federal Register Notice do not require that an invention generate energy or convert kinetic energy from the wind into the mechanical energy into electrical energy in order to be eligible for the Green Technology Pilot Program. As such, applicant does not agree that embodiments of the invention do not contribute to the development of renewable energy resources, or energy conservation because they cannot generate energy or convert kinetic energy from the wind into the mechanical energy into electrical energy.

While wind power is considered one of the cleanest, most environmentally friendly energy sources presently available, the availability of wind energy as a viable power generating option heavily depends on the cost/benefit economics of wind energy. As such, it is important that the cost of producing the energy, including the costs of transportation and installation of the wind turbines, cannot outweigh the benefits.

As is known, the size, shape, and weight of rotor blades are factors that contribute to energy efficiencies of wind turbines. An increase in rotor blade size increases the energy production of a wind turbine. As the size of wind turbines increase, particularly the size of rotor blades, so does the size of the tower required to support the wind turbine. Because of their size, such towers are often constructed on site, as the towers themselves are much larger than is practically transportable. Components used with such towers are often assembled off-site. Similar to the tower itself, transportation logistics generally limit the storage size and/or weight of such components. Tower height is at least partially limited by the dimensions of the base of the tower. As such, a taller tower requires a correspondingly larger base to adequately support the tower structure. To enhance the overall structural integrity and to reduce on-site assembly time, it is generally desirable to assemble the components of the modular tower in as few pieces as possible. However, due to transportation limitations, the overall size of components and sections is limited. As such, the height of the tower may be limited by the size of the unitary components that can be used in light of transportation limitations. (see at least paragraphs [0002] and [0003]).

The methods and modular tower components described herein facilitate construction of a modular tower. Specifically, the modular tower components and methods described herein enable construction of tower sections that are larger than unitary tower sections that are limited in size by transportation limitations. Using larger modular tower sections, structurally-sound towers having higher hub heights can be constructed. Moreover, spacer elements described herein facilitate aligning adjacent section panels together during construction, and thus, increase the structural integrity of the assembled tower. Moreover the flanges described herein that are used to connect adjacent tower sections together, facilitate reducing hoop stresses induced to the tower components. (see at least paragraph [0017]).

The embodiments described in the present invention facilitate the transportation of larger wind turbine towers, enabling more efficient wind turbines with larger rotor blades, by constructing the towers from components that are easily assembled on site and that are not limited by transportation limitations. By easing the known difficulties in the transportation of large wind turbine towers, the present invention materially contributes to the development of renewable energy by eliminating material and cost limitations associated with the transportation and installation of wind turbines, thus increasing the availability of wind energy as a viable power generating option. Embodiments of the present invention also facilitate the production of larger wind turbines with larger rotor blades, which in turn increases the energy production of a wind turbine and promotes increased energy production.

The undersigned attorney may be contacted at the number below to facilitate the resolution of any matters. Please charge any fees that are incurred in connection with this Statement to deposit account no. 09-0470.

Respectfully submitted,

General Electric Company

By : /Allison W Mages/
Allison Weiner Mages
Reg. No. 57,275

Dated: September 26, 2011

GE Global Patent Operation
2 Corporate Drive, Suite 648
Shelton, CT 06484
203-944-6730

UNITED STATES PATENT AND TRADEMARK OFFICE

UNITED STATES DEPARTMENT OF COMMERCE
United States Patent and Trademark Office
Address: COMMISSIONER FOR PATENTS
P.O. Box 1450
Alexandria, Virginia 22313-1450
www.uspto.gov

| APPLICATION NO. | FILING DATE | FIRST NAMED INVENTOR | ATTORNEY DOCKET NO. | CONFIRMATION NO. |
|---|---|---|---|---|
| 13/009,326 | 01/19/2011 | Balaji Haridasu | 246880-1 (22402-252) | 1540 |

45432 7590 10/27/2011

PATRICK W. RASCHE (22402)
ARMSTRONG TEASDALE LLP
7700 Forsyth Boulevard
Suite 1800
St. Louis, MO 63105

| EXAMINER | |
|---|---|
| WENDELL, MARK R | |

| ART UNIT | PAPER NUMBER |
|---|---|
| 3635 | |

| NOTIFICATION DATE | DELIVERY MODE |
|---|---|
| 10/27/2011 | ELECTRONIC |

**Please find below and/or attached an Office communication concerning this application or proceeding.**

The time period for reply, if any, is set in the attached communication.

Notice of the Office communication was sent electronically on above-indicated "Notification Date" to the following e-mail address(es):

uspatents@armstrongteasdale.com

UNITED STATES PATENT AND TRADEMARK OFFICE

Commissioner for Patents
United States Patent and Trademark Office
P.O. Box 1450
Alexandria, VA 22313-1450
www.uspto.gov

10/27/11

PATRICK W. RASCHE (22402)
ARMSTRONG TEASDALE LLP
7700 Forsyth Boulevard
Suite 1800
St. Louis MO 63105

| | | |
|---|---|---|
| In re Application of | : | |
| Haridasu et al. | : | DECISION ON PETITION |
| Application No. 13/009,326 | : | TO MAKE SPECIAL UNDER |
| Filed: 1/19/2011 | : | THE GREEN TECHNOLOGY |
| Attorney Docket No. **246880-1 (22402-252)** | : | PILOT PROGRAM |

This is a decision on the request for reconsideration, filed 9/26/2011, to make the above-identified application special under the pilot program for applications pertaining to Green Technologies as set forth in 74 Federal Register Notice 64666 (December 8, 2009) and amended by 75 Federal Register Notice 28554 (May 21, 2010) and 75 Federal Register Notice 69049 (November 10, 2010).

The petition is **DENIED**.

A grantable petition to make an application special under 37 CFR 1.102 and the pilot program as set forth in 74 FR 64666 must be directed to a nonprovisional application filed under 35 USC 111(a) or be a national stage entry under 35 USC 371, exclusive of any reissue applications and be filed prior to the date of the notice, December 8, 2009.

In order to qualify for special status, the following requirements must be met. 1) The application must have no more than 3 independent claims and no more than 20 total claims. 2) The application must not contain any multiple dependent claims. 3) The petition must state the basis for seeking special status, i.e., the claimed invention either: A) materially enhances the quality of the environment or B) materially contributes to: i) the discovery or development of renewable energy resources, ii) the more efficient utilization and conservation of energy resources, or iii) greenhouse gas emission reduction. 4) If the disclosure is not clear on its face that the claimed invention materially contributes under category (A) or (B), the petition must be accompanied by a statement by the applicant, assignee, or an attorney/agent registered to practice before the Office explaining how the materiality standard is met. 5) A statement that applicant will agree to make an election without traverse in a telephonic interview if a restriction requirement is made by the examiner. 6) The petition to make special must be filed electronically. 7) The petition must be filed at least one day prior to the date that a first Office Action appears in the Patent Application Information Retrieval (PAIR) system. 8) The petition must be accompanied by a

request for early publication in compliance with 37 CFR 1.219 and include the publication fee as set forth in 37 CFR 1.18(d).

The requirement for a fee for consideration of the petition to make special for applications pertaining to Green Technologies has been waived.

The petition lacks item(s) 4.

Applicants argue that the instant invention is directed to a tower which may be used for wind turbines. The instant claims however are merely directed to a tower assembly for use with a modular tower. There is no mention of wind turbines in the instant claims and the specification specifically states on page 14, last paragraph that the instantly claimed system is not limited to practice with wind turbine but rather can be used in connection with various other industries. The materiality standard does not permit an applicant to speculate how an end user might specifically apply the invention in a manner that could materially contribute to (1) materially enhancing the quality of the environment or materially contributing to (2) development of renewable energy resources or energy conservation, or (3) greenhouse gas reduction.

Any reconsideration of this decision should be submitted through the USPTO electronic filing system, EFS-Web, and selecting the document description of "Petition for Green Tech Pilot" on the EFS-Web screen.

Telephone inquiries concerning this decision should be directed to Tom Dunn at 571-272-1171.

The application is being forwarded to the Technology Center Art Unit 3635 for action in its regular turn.

/Tom Dunn/

Tom Dunn
Quality Assurance Specialist
Technology Center 1700

Doc Code: PET.RELIEF
Document Description: Certification and Request for Disaster Relief

PTO/SB/425 (03-11)

# CERTIFICATION AND REQUEST FOR RELIEF DUE TO EVENTS OF MARCH 11, 2011, IN JAPAN (Page 1 of 2)

| Nonprovisional Application Number or Control Number (if applicable): | Patent Number (if applicable): |
|---|---|
| 13/009,366 | |
| First Named Inventor: | Title of Invention: |
| Eiji IMAI et al. | FOREIGN MATTER INSPECTION APPARATUS |

**APPLICANT/PATENTEE/REEXAMINATION PARTY HEREBY CERTIFIES AND REQUESTS THE FOLLOWING FOR THE ABOVE-IDENTIFIED APPLICATION/PATENT/REEXAMINATION PROCEEDING.**

1. FOR PATENT APPLICATIONS AND REEXAMINATION PROCEEDINGS PENDING IN THE USPTO AS OF MARCH 11, 2011, IN WHICH A COMMUNICATION FROM THE USPTO IS SOUGHT TO BE REMAILED:

   a. One or more inventors, an assignee, or a correspondence address (for the application/proceeding) is in an area of Japan affected by the earthquake and/or tsunami of March 11, 2011.

   b. A reply or response to an Office action (final, non-final, or other), a notice of allowance, or other Office notice (hereinafter collectively referred to as "Office communication") is outstanding on March 11, 2011.

   c. The statutory or non-statutory time period set for response has not yet expired.

   d. Withdrawal and reissuance of the Office communication is requested.

   e. It is acknowledged that if this request is not made within sufficient time so that withdrawal and reissuance of the Office communication occur prior to expiration of the statutory or non-statutory time period (as permitted to be extended under 37 CFR 1.136(a), or as extended under 37 CFR 1.550(c) or 1.956), this request may not be granted.

   f. The need for the reissuance of the Office communication was due to the effects of the earthquake and/or tsunami of March 11, 2011.

   g. This request is being sent via EFS-Web or by mail directed to Mail Stop Petition, Commissioner for Patents, P.O. Box 1450, Alexandria, VA 22313-1450.

2. FOR PATENTEES WHO WERE UNABLE TO TIMELY PAY A PATENT MAINTENANCE FEE DURING THE SIX-MONTH GRACE PERIOD FOLLOWING THE WINDOW TO PAY THE MAINTENANCE FEE:

   a. The original window of time to pay the maintenance fee without the surcharge required by 37 CFR 1.20(h) expired on or after March 11, 2011.

   b. The delay in paying the fee was due to the effects of the earthquake and/or tsunami of March 11, 2011.

   c. The USPTO is requested to *sua sponte* waive the surcharge in 37 CFR 1.20(h) for paying a maintenance fee during the six-month grace period following the window to pay the maintenance fee.

   d. This request and payment of the maintenance fee during the six-month grace period following the window to pay the maintenance fee is being mailed to: Director of the United States Patent and Trademark Office, Attn: Maintenance Fee, 2051 Jamieson Avenue, Suite 300, Alexandria, VA 22314; or being transmitted via facsimile to: 571-273-6500.

## CERTIFICATION AND REQUEST FOR RELIEF DUE TO EVENTS OF MARCH 11, 2011, IN JAPAN (Page 2 of 2)

3. FOR PATENTEES WHO NEED TO FILE A PETITION TO ACCEPT A DELAYED MAINTENANCE FEE PAYMENT UNDER 37 CFR 1.378(c):

   a. The maintenance fee payment was required to have been paid after March 10, 2011.

   b. A petition under 37 CFR 1.378(c) (using USPTO form PTO/SB/66 – Petition to Accept Unintentionally Delayed Payment of Maintenance Fee in an Expired Patent (37 CFR 1.378(c))) is being promptly filed accompanied by the applicable maintenance fee payment (but not the surcharge under 37 CFR 1.20(i)).

   c. The delay in payment of the maintenance fee was due to the effects of the earthquake and/or tsunami of March 11, 2011.

   d. The USPTO is requested to *sua sponte* waive the surcharge in 37 CFR 1.20(i) for accepting a delayed maintenance fee payment.

   e. It is acknowledged that the petition to accept a delayed maintenance fee payment under 37 CFR 1.378(c) must be filed by March 11, 2012, in order to be entitled to a waiver of the surcharge under 37 CFR 1.20(i).

   f. It is acknowledged that the petition to accept a delayed maintenance fee payment under 37 CFR 1.378(c) must be filed within twenty-four months from the expiration date of the patent. *See* 35 U.S.C 41(c).

   g. This request and the petition to accept a delayed maintenance fee payment under 37 CFR 1.378(c) is being submitted via EFS-Web or by mail directed to Mail Stop Petition, Commissioner for Patents, P.O. Box 1450, Alexandria, VA 22313-1450.

4. FOR NONPROVISIONAL PATENT APPLICATIONS FILED WITHOUT AN EXECUTED OATH OR DECLARATION OR PAYMENT OF THE BASIC FILING FEE, SEARCH FEE, AND/OR EXAMINATION FEE:

   a. The nonprovisional patent application was filed on or after March 11, 2011, and prior to April 12, 2011.

   b. The late filing of the oath or declaration or the basic filing fee, search fee, or examination fee was due to the effects of the earthquake and/or tsunami of March 11, 2011.

   c. The USPTO is requested to *sua sponte* waive the surcharge set forth in 37 CFR 1.16(f) for the late filing of the oath or declaration or basic filing fee, search fee, and/or examination fee.

   d. This request, together with the executed oath or declaration or the basic filing fee, search fee, or examination fee, as well as the reply to the Notice to File Missing Parts, is being submitted via EFS-Web or by mail directed to Mail Stop Missing Parts, Commissioner for Patents, P.O. Box 1450, Alexandria, VA 22313-1450.

| Signature Keith E. George | Date June 24, 2011 |
|---|---|
| Name (Print/Typed) Keith E. George | Practitioner Registration Number 34,111 |

***Note:*** *Signatures of all the inventors, § 1.41(b) applicants, or assignees of record of the entire interest or their representative(s), or reexamination requesters at the appeal stage are required in accordance with 37 CFR 1.33 and 11.18. Please see 37 CFR 1.4(d) for the form of the signature. If necessary, submit multiple forms for more than one signature, see below*.*

■ *Total of 1 forms are submitted.

UNITED STATES PATENT AND TRADEMARK OFFICE

Commissioner for Patents
United States Patent and Trademark Office
P.O. Box 1450
Alexandria, VA 22313-1450
www.uspto.gov

MCDERMOTT WILL & EMERY LLP
600 13TH STREET, N.W.
WASHINGTON DC 20005-3096

MAILED

JUN 29 2011

OFFICE OF PETITIONS

In re Application of
Imai et al.
Application No. 13/009,366
Filed: January 19, 2011
Attorney Docket No. 062807-0691

DECISION ON PETITION

This is a decision on the request filed June 24, 2011, seeking relief under the provisions of "Relief Available to Patent and Trademark Applicants, Patentees and Trademark Owners Affected by the Catastrophic Events of March 11, 2011 in Japan," 1365 Off. Gaz. Pat. Office 170 (April 19, 2011).

The request for relief is **GRANTED**.

In the above-identified application, an Office action was mailed on February 11, 2011. The instant petition was filed prior to the expiration of the period for reply and the certifications for granting of relief are considered to be met by the submission of the request.

Telephone inquires concerning this decision should be directed to the undersigned at 571-272-7751. All other inquires concerning either the examination or status of the application should be directed to the Technology Center.

This application is being referred to the Technology Center, Art Unit 2886 for re-mailing the Office action of February 11, 2011. The period for reply will run from the mailing date of the Office action.

/Joan Olszewski/
Joan Olszewski
Petitions Examiner
Office of Petitions

Doc code : PET.OP.AGE
Description : Petition to make special based on Age/Health

PTO/SB/130 (07-09)
Approved for use through 07/31/2012. OMB 0651- 0031
U.S. Patent and Trademark Office; U.S. DEPARTMENT OF COMMERCE
Under the Paperwork Reduction Act of 1995, no persons are required to respond to a collection of information unless it contains a valid OMB control number

## PETITION TO MAKE SPECIAL BASED ON AGE FOR ADVANCEMENT OF EXAMINATION UNDER 37 CFR 1.102(c)(1)

### Application Information

| | | | | | |
|---|---|---|---|---|---|
| Application Number | 13009369 | Confirmation Number | 1614 | Filing Date | 2011-01-19 |
| Attorney Docket Number (optional) | 01-65 | Art Unit | 1736 | Examiner | |
| First Named Inventor | William B. Retallick | | | | |
| Title of Invention | SORBENT FOR CARBON DIOXIDE | | | | |

**Attention: Office of Petitions**
An application may be made special for advancement of examination upon filing of a petition showing that the applicant is 65 years of age, or more. No fee is required with such a petition. See 37 CFR 1.102(c)(1) and MPEP 708.02 (IV).

APPLICANT HEREBY PETITIONS TO MAKE SPECIAL FOR ADVANCEMENT OF EXAMINATION IN THIS APPLICATION UNDER 37 CFR 1.102(c)(1) and MPEP 708.02 (IV) ON THE BASIS OF THE APPLICANT'S AGE.

A grantable petition requires one of the following items:
(1) Statement by one named inventor in the application that he/she is 65 years of age, or more; or
(2) Certification by a registered attorney/agent having evidence such as a birth certificate, passport, driver's license, etc. showing one named inventor in the application is 65 years of age, or more.

**Name of Inventor who is 65 years of age, or older**

| Given Name | Middle Name | Family Name | Suffix |
|---|---|---|---|
| William | B. | Retallick | |

A signature of the applicant or representative is required in accordance with 37 CFR 1.33 and 10.18. Please see 37 CFR 1.4(d) for the format of the signature.

Select (1) or (2) :

○ (1) I am an inventor in this application and I am 65 years of age, or more.

● (2) I am an attorney or agent registered to practice before the Patent and Trademark Office, and I certify that I am in possession of evidence, and will retain such in the application file record, showing that the inventor listed above is 65 years of age, or more.

| | | | |
|---|---|---|---|
| Signature | /William H. Eilberg/ | Date (YYYY-MM-DD) | 2011-05-17 |
| Name | William H. Eilberg | Registration Number | 28009 |

PTO/SB/130 (07-09)
Approved for use through 07/31/2012. OMB 0651- 0031
U.S. Patent and Trademark Office; U.S. DEPARTMENT OF COMMERCE
Under the Paperwork Reduction Act of 1995, no persons are required to respond to a collection of information unless it contains a valid OMB control number

# Privacy Act Statement

The Privacy Act of 1974 (P.L. 93-579) requires that you be given certain information in connection with your submission of the attached form related to a patent application or patent. Accordingly, pursuant to the requirements of the Act, please be advised that: (1) the general authority for the collection of this information is 35 U.S.C. 2(b)(2); (2) furnishing of the information solicited is voluntary; and (3) the principal purpose for which the information is used by the U.S. Patent and Trademark Office is to process and/or examine your submission related to a patent application or patent. If you do not furnish the requested information, the U.S. Patent and Trademark Office may not be able to process and/or examine your submission, which may result in termination of proceedings or abandonment of the application or expiration of the patent.

The information provided by you in this form will be subject to the following routine uses:

1. The information on this form will be treated confidentially to the extent allowed under the Freedom of Information Act (5 U.S.C. 552) and the Privacy Act (5 U.S.C. 552a). Records from this system of records may be disclosed to the Department of Justice to determine whether the Fr eedom of Information Act requires disclosure of these records.

2. A record from this system of records may be disclosed, as a routine use, in the course of presenting evidence to a court, magistrate, or administrative tribunal, including disclosures to opposing counsel in the course of settlement negotiations.

3. A record in this system of records may be disclosed, as a routine use, to a Member of Congress submitting a request involving an individual, to whom the record pertains, when the individual has requested assistance from the Member with respect to the subject matter of the record.

4. A record in this system of records may be disclosed, as a routine use, to a contractor of the Agency having need for the information in order to perform a contract. Recipients of information shall be required to comply with the requirements of the Privacy Act of 1974, as amended, pursuant to 5 U.S.C. 552a(m).

5. A record related to an International Application filed under the Patent Cooperation Treaty in this system of records may be disclosed, as a routine use, to the International Bureau of the World Intellectual Property Organization, pursuant to the Patent Cooperation Treaty.

6. A record in this system of records may be disclosed, as a routine use, to another federal agency for purposes of National Security review (35 U.S.C. 181) and for review pursuant to the Atomic Energy Act (42 U.S.C. 218(c)).

7. A record from this system of records may be disclosed, as a routine use, to the Administrator, General Services, or his/her designee, during an inspection of records conducted by GSA as part of that agency's responsibility to recommend improvements in records management practices and programs, under authority of 44 U.S.C. 2904 and 2906. Such disclosure shall be made in accordance with the GSA regulations governing inspection of records for this purpose, and any other relevant (i.e., GSA or Commerce) directive. Such disclosure shall not be used to make determinations about indivi duals.

8. A record from this system of records may be disclosed, as a routine use, to the public after either publication of the application pursuant to 35 U.S.C. 122(b) or issuance of a patent pursuant to 35 U.S.C. 151. Further, a record may be disclosed, subject to the limitations of 37 CFR 1.14, as a routine use, to the public if the record was filed in an application which became abandoned or in which the proceedings were terminated and which application is referenced by either a published application, an application open to public inspections or an issued patent.

9. A record from this system of records may be disclosed, as a routine use, to a Federal, State, or local law enforcement agency, if the USPTO becomes aware of a violation or potential violation of law or regulation.

UNITED STATES PATENT AND TRADEMARK OFFICE

Commissioner for Patents
United States Patent and Trademark Office
P.O. Box 1450
Alexandria, VA 22313-1450
www.uspto.gov

In re Application of
William B. Retallick

Application No. 13009369

Filed: January 19,2011

Attorney Docket No. 01-65

:
:
:DECISION ON PETITION TO MAKE SPECIAL
:UNDER 37 CFR 1.102(c)(1)
:

This is a decision on the electronic petition under 37 CFR 1.102 (c)(1), filed 17-MAY-2011 to make the above-identified application special based on applicant's age as set forth in MPEP § 708.02, Section IV.

The petition is **GRANTED**.

A grantable petition to make an application special under 37 CFR 1.102(c)(1), MPEP § 708.02, Section IV: Applicant's Age must include a statement by applicant or a registered practitioner having evidence that applicant is at least 65 years of age. No fee is required.

Accordingly, the above-identified application has been accorded "special" status and will be taken up for action by the examiner upon the completion of all pre-examination processing.

Telephone inquiries concerning this electronic decision should be directed to the Electronic Business Center at 866-217-9197.

All other inquiries concerning either the examination or status of the application should be directed to the Technology Center.

UNITED STATES PATENT AND TRADEMARK OFFICE

Commissioner for Patents
United States Patent and Trademark Office
P.O. Box 1450
Alexandria, VA 22313-1450
www.uspto.gov

In re Application of
Christine KUSLICH

Application No. 13009393

Filed:

Attorney Docket No. 37901-706.303

:DECISION ON PETITION TO MAKE SPECIAL
:UNDER 37 CFR 1.102(c)(1)

This is a decision on the electronic petition under 37 CFR 1.102 (c)(1), filed 20-JAN-2011 to make the above-identified application special based on applicant's age as set forth in MPEP § 708.02, Section IV.

The petition is **GRANTED**.

A grantable petition to make an application special under 37 CFR 1.102(c)(1), MPEP § 708.02, Section IV: Applicant's Age must include a statement by applicant or a registered practitioner having evidence that applicant is at least 65 years of age. No fee is required.

Accordingly, the above-identified application has been accorded "special" status and will be taken up for action by the examiner upon the completion of all pre-examination processing.

Telephone inquiries concerning this electronic decision should be directed to the Electronic Business Center at 866-217-9197.

All other inquiries concerning either the examination or status of the application should be directed to the Technology Center.

**Doc Code: PET.GREEN**
**Document Description: Petition for Green Tech Pilot**

PTO/SB/420 (05-10)
Approved for use through 05/31/2010. OMB 0651-0062
U.S. Patent and Trademark Office; U.S. DEPARTMENT OF COMMERCE
Under the Paperwork Reduction Act of 1995, no persons are required to respond to a collection of information unless it displays a valid OMB control number.

# PETITION TO MAKE SPECIAL UNDER THE GREEN TECHNOLOGY PILOT PROGRAM

| Attorney Docket Number: SUS-001CP2/7300654002 | Application Number (if known): | Filing date: Herewith |
|---|---|---|
| First Named Inventor: Troy O. McBride | | |
| Title: SYSTEMS AND METHODS FOR EFFICIENT PUMPING OF HIGH-PRESSURE FLUIDS FOR ENERGY STORAGE AND RECOVERY | | |

**APPLICANT HEREBY REQUESTS TO PARTICIPATE IN THE GREEN TECHNOLOGY PILOT PROGRAM FOR THE ABOVE-IDENTIFIED APPLICATION. See Instruction Sheet on page 2.**

This petition must be timely filed electronically using the USPTO electronic filing system, EFS-Web.

1. By filing this petition:

   **Applicant is requesting early publication: Applicant hereby requests early publication under 37 CFR 1.219 and the publication fee set forth in 37 CFR 1.18(d) accompanies this request.**

2. By filing this petition: applicant is agreeing to make an election without traverse in a telephonic interview and elect an invention that meets the eligibility requirements set forth in the notice titled "Pilot Program for Green Technologies Including Greenhouse Gas Reduction," as modified by the notice titled "Elimination of Classification Requirement in the Green Technology Pilot Program," each of which was published in the Federal Register, if the Office determines that the claims are not obviously directed to a single invention.

3. This request is accompanied by statements of special status for the eligibility requirement.

4. The application contains no more than three (3) independent claims and twenty (20) total claims.

5. The application does not contain any multiple dependent claims

6. Other attachments: Statement of Special Status and Materiality

| Signature /Matthew T. Currie/ | Date January 19, 2011 |
|---|---|
| Name (Print/Typed) Matthew T. Currie | Registration Number 58,533 |

***Note**: Signatures of all the inventors or assignees of record of the entire interest or their representative(s) are required in accordance with 37 CFR 1.33 and 11.18. Please see 37 CFR 1.4(d) for the form of the signature. If necessary, submit multiple forms if more than one signature, see below*.*

☐ *Total of 1 forms are submitted.

UNITED STATES PATENT AND TRADEMARK OFFICE

UNITED STATES DEPARTMENT OF COMMERCE
United States Patent and Trademark Office
Address: COMMISSIONER FOR PATENTS
P.O. Box 1450
Alexandria, Virginia 22313-1450
www.uspto.gov

| APPLICATION NO. | FILING DATE | FIRST NAMED INVENTOR | ATTORNEY DOCKET NO. | CONFIRMATION NO. |
|---|---|---|---|---|
| 13/009,409 | 01/19/2011 | Troy O. McBride | SUS-001CP2/7300654002 | 1683 |

23517 7590 04/04/2011

BINGHAM MCCUTCHEN LLP
2020 K Street, N.W.
Intellectual Property Department
WASHINGTON, DC 20006

| EXAMINER | |
|---|---|
| ART UNIT | PAPER NUMBER |
| 3744 | |

| MAIL DATE | DELIVERY MODE |
|---|---|
| 04/04/2011 | PAPER |

**Please find below and/or attached an Office communication concerning this application or proceeding.**

The time period for reply, if any, is set in the attached communication.

UNITED STATES PATENT AND TRADEMARK OFFICE

Commissioner for Patents
United States Patent and Trademark Office
P.O. Box 1450
Alexandria, VA 22313-1450
www.uspto.gov

BINGHAM MCCUTCHEN LLP
2020 K Street, N.W.
Intellectual Property Department
WASHINGTON DC 20006

| | | |
|---|---|---|
| In re Application of | : | |
| MCBRIDE, TROY O. et al | : | DECISION ON PETITION |
| Application No. 13/009,409 | : | TO MAKE SPECIAL UNDER |
| Filed: Jan. 19, 2011 | : | THE GREEN TECHNOLOGY |
| Attorney Docket No. SUS-001CP2/7300654002 | : | PILOT PROGRAM |

This is a decision on the petition under 37 CFR 1.102, filed Jan. 19, 2011, to make the above-identified application special under the pilot program for applications pertaining to Green Technologies as set forth in 74 Federal Register Notice 64666 (December 8, 2009) and amended by 75 Federal Register Notice 28554 (May 21, 2010) and 75 Federal Register Notice 69049 (November 10, 2010).

The petition is granted.

If reconsideration of this decision is desired, a petition for reconsideration must be filed within ONE (1) MONTH OR THIRTY (30) DAYS from the mail date of this decision, whichever is longer. No extension of this time limit can be granted under 37 CFR 1.136(a) or (b). The petition for reconsideration should include an exhaustive attempt to provide the lacking item(s) noted below, since, after a decision on the petition for reconsideration, no further reconsideration or review of the matter will be undertaken by the Director.

A grantable petition to make an application special under 37 CFR 1.102 and the pilot program as set forth in 74 FR 64666 must be directed to a nonprovisional application filed under 35 USC 111(a) or be a national stage entry under 35 USC 371, exclusive of any reissue applications.

In order to qualify for special status, the following requirements must be met. 1) The application must have no more than 3 independent claims and no more than 20 total claims. 2) The application must not contain any multiple dependent claims. 3) The petition must state the basis for seeking special status, i.e., the claimed invention either: A) materially enhances the quality of the environment or B) materially contributes to: i) the discovery or development of renewable energy resources, ii) the more efficient utilization and conservation of energy resources, or iii)

greenhouse gas emission reduction. 4) If the disclosure is not clear on its face that the claimed invention materially contributes under category (A) or (B), the petition must be accompanied by a statement by the applicant, assignee, or an attorney/agent registered to practice before the Office explaining how the materiality standard is met. 5) A statement that applicant will agree to make an election without traverse in a telephonic interview if a restriction requirement is made by the examiner. 6) The petition to make special must be filed electronically. 7) The petition must be filed at least one day prior to the date that a first Office Action appears in the Patent Application Information Retrieval (PAIR) system. 8) The petition must be accompanied by a request for early publication in compliance with 37 CFR 1.219 and include the publication fee as set forth in 37 CFR 1.18(d). The requirement for a fee for consideration of the petition to make special for applications pertaining to Green Technologies has been waived.

The instant petition complies with items 1 – 8 above. Accordingly, the above-identified application has been accorded "special" status.

Telephone inquires concerning this decision should be directed to Henry C. Yuen at 571-272-4856.

Currently, this application is undergoing pre-examination processing. Upon completion, this application will be forwarded to the Technology Center Art Unit 3744 for action on the merits commensurate with this decision.

/Henry C. Yuen/

Henry C. Yuen
Quality Assurance Specialist
Technology Center TC 3700

UNITED STATES PATENT AND TRADEMARK OFFICE

Commissioner for Patents
United States Patent and Trademark Office
P.O. Box 1450
Alexandria, VA 22313-1450
www.uspto.gov

In re Application of
Marshall Medoff

Application No. 13009412

Filed:

Attorney Docket No. 08896-0103003

:DECISION ON PETITION TO MAKE SPECIAL
:UNDER 37 CFR 1.102(c)(1)

This is a decision on the electronic petition under 37 CFR 1.102 (c)(1), filed 19-JAN-2011 to make the above-identified application special based on applicant's age as set forth in MPEP § 708.02, Section IV.

The petition is **GRANTED**.

A grantable petition to make an application special under 37 CFR 1.102(c)(1), MPEP § 708.02, Section IV: Applicant's Age must include a statement by applicant or a registered practitioner having evidence that applicant is at least 65 years of age. No fee is required.

Accordingly, the above-identified application has been accorded "special" status and will be taken up for action by the examiner upon the completion of all pre-examination processing.

Telephone inquiries concerning this electronic decision should be directed to the Electronic Business Center at 866-217-9197.

All other inquiries concerning either the examination or status of the application should be directed to the Technology Center.

Doc Code: PPH.PET.652
Document Description: Petition to make special under Patent Pros Hwy

PTO/SB/20DE (04-09)
Approved for use through 01/31/2012. OMB 0651-0058
U.S. Patent and Trademark Office; U.S. DEPARTMENT OF COMMERCE
Under the Paperwork Reduction Act of 1995, no persons are required to respond to a collection of information unless it displays a valid OMB control number.

# REQUEST FOR PARTICIPATION IN THE PATENT PROSECUTION HIGHWAY (PPH) PILOT PROGRAM BETWEEN THE DPMA AND THE USPTO

| | | | |
|---|---|---|---|
| Application No.: | | First Named Inventor: | Ulrich Weber |
| Filing Date: | January 19, 2011 | Attorney Docket No.: | 22942-0041001 |
| Title of the invention: | ACTUATORS AND MICROLITHOGRAPHY PROJECTION EXPOSURE SYSTEMS AND METHODS USING THE SAME | | |

**THIS REQUEST FOR PARTICIPATION IN THE PPH PILOT PROGRAM ALONG WITH THE REQUIRED DOCUMENTS MUST BE SUBMITTED VIA EFS-WEB. INFORMATION REGARDING EFS-WEB IS AVAILABLE AT HTTP://WWW.USPTO.GOV/EBC/EFS_HELP.HTML.**

**APPLICANT HEREBY REQUESTS PARTICIPATION IN THE PATENT PROSECUTION HIGHWAY (PPH) PILOT PROGRAM AND PETITIONS TO MAKE THE ABOVE-IDENTIFIED APPLICATION SPECIAL UNDER THE PPH PILOT PROGRAM.**

The above-identified application (1) validly claims priority under 35 U.S.C. 119(a) and 37 CFR 1.55 to one or more corresponding DE application(s) or to a PCT application that does not contain any priority claim, or (2) is a national stage entry of a PCT application that does not contain any priority claim.

**The DE/PCT application number(s) is/are:** DE 10 2008 034 285.8

**The filing date of the DE/PCT application(s) is/are:** July 22, 2008

**I. List of Required Documents:**

a. **A copy of all DE office actions (which are relevant to patentability) in the above-identified DE application(s)**

☒ is attached.

b. **A copy of all claims which were determined to be patentable by DPMA in the above-identified DE application(s)**

☒ is attached.

c. **(1) An information disclosure statement listing the documents cited in the DE office actions**

☒ is attached.

☐ has already been filed in the above-identified U.S. application on _____

**(2) Copies of all documents (except for U.S. patents or U.S. patent application publications)**

☒ are attached.

☐ have already been filed in the above-identified U.S. application on _____



This collection of information is required by 35 U.S.C. 119, 37 CFR 1.55, and 37 CFR 1.102(d). The information is required to obtain or retain a benefit by the public, which is to file (and by the USPTO to process) an application. Confidentiality is governed by 35 U.S.C. 122 and 37 CFR 1.11 and 1.14. This collection is estimated to take 2 hours to complete, including gathering, preparing, and submitting the completed application form to the USPTO. Time will vary depending upon the individual case. Any comments on the amount of time you require to complete this form and/or suggestions for reducing this burden should be sent to the Chief Information Officer, U.S. Patent and Trademark Office, U.S. Department of Commerce, P.O. Box 1450, Alexandria, VA 22313-1450. DO NOT SEND FEES OR COMPLETED FORMS TO THIS ADDRESS.

PTO/SB/20DE (04-09)
Approved for use through 01/31/2012. OMB 0651-0058
U.S. Patent and Trademark Office; U.S. DEPARTMENT OF COMMERCE
Under the Paperwork Reduction Act of 1995, no persons are required to respond to a collection of information unless it displays a valid OMB control number.

# REQUEST FOR PARTICIPATION IN THE PATENT PROSECUTION HIGHWAY (PPH) PILOT PROGRAM BETWEEN DPMA AND THE USPTO

(continued)

| Application No.: | | First Named Inventor: | Ulrich Weber |
|---|---|---|---|

## II. Claims Correspondence Table:

| Claims in US Application | Patentable Claims in DE Application | Explanation regarding the correspondence |
|---|---|---|
| See attached sheet | | |
| | | |
| | | |
| | | |
| | | |
| | | |
| | | |
| | | |
| | | |
| | | |
| | | |
| | | |
| | | |
| | | |
| | | |
| | | |
| | | |
| | | |
| | | |
| | | |
| | | |
| | | |

## III. All the claims in the US application sufficiently correspond to the patentable/allowable claims in the DE application.

## IV. Payment of Fees:

**The petition fee under 37 CFR 1.17(h) as required by 37 CFR 1.102(d) must be paid via EFS-Web (using credit card, authorization to charge a deposit account, or electronic funds transfer).**

| Signature / Chris Bowley / | Date January 19, 2011 |
|---|---|
| Name (Print/Typed) Chris Bowley | Registration Number 55,016 |

# Privacy Act Statement

The **Privacy Act of 1974 (P.L. 93-579)** requires that you be given certain information in connection with your submission of the attached form related to a patent application or patent. Accordingly, pursuant to the requirements of the Act, please be advised that: (1) the general authority for the collection of this information is 35 U.S.C. 2(b)(2); (2) furnishing of the information solicited is voluntary; and (3) the principal purpose for which the information is used by the U.S. Patent and Trademark Office is to process and/or examine your submission related to a patent application or patent. If you do not furnish the requested information, the U.S. Patent and Trademark Office may not be able to process and/or examine your submission, which may result in termination of proceedings or abandonment of the application or expiration of the patent.

The information provided by you in this form will be subject to the following routine uses:

1. The information on this form will be treated confidentially to the extent allowed under the Freedom of Information Act (5 U.S.C. 552) and the Privacy Act (5 U.S.C 552a). Records from this system of records may be disclosed to the Department of Justice to determine whether disclosure of these records is required by the Freedom of Information Act.
2. A record from this system of records may be disclosed, as a routine use, in the course of presenting evidence to a court, magistrate, or administrative tribunal, including disclosures to opposing counsel in the course of settlement negotiations.
3. A record in this system of records may be disclosed, as a routine use, to a Member of Congress submitting a request involving an individual, to whom the record pertains, when the individual has requested assistance from the Member with respect to the subject matter of the record.
4. A record in this system of records may be disclosed, as a routine use, to a contractor of the Agency having need for the information in order to perform a contract. Recipients of information shall be required to comply with the requirements of the Privacy Act of 1974, as amended, pursuant to 5 U.S.C. 552a(m).
5. A record related to an International Application filed under the Patent Cooperation Treaty in this system of records may be disclosed, as a routine use, to the International Bureau of the World Intellectual Property Organization, pursuant to the Patent Cooperation Treaty.
6. A record in this system of records may be disclosed, as a routine use, to another federal agency for purposes of National Security review (35 U.S.C. 181) and for review pursuant to the Atomic Energy Act (42 U.S.C. 218(c)).
7. A record from this system of records may be disclosed, as a routine use, to the Administrator, General Services, or his/her designee, during an inspection of records conducted by GSA as part of that agency's responsibility to recommend improvements in records management practices and programs, under authority of 44 U.S.C. 2904 and 2906. Such disclosure shall be made in accordance with the GSA regulations governing inspection of records for this purpose, and any other relevant (*i.e.*, GSA or Commerce) directive. Such disclosure shall not be used to make determinations about individuals.
8. A record from this system of records may be disclosed, as a routine use, to the public after either publication of the application pursuant to 35 U.S.C. 122(b) or issuance of a patent pursuant to 35 U.S.C. 151. Further, a record may be disclosed, subject to the limitations of 37 CFR 1.14, as a routine use, to the public if the record was filed in an application which became abandoned or in which the proceedings were terminated and which application is referenced by either a published application, an application open to public inspection or an issued patent.
9. A record from this system of records may be disclosed, as a routine use, to a Federal, State, or local law enforcement agency, if the USPTO becomes aware of a violation or potential violation of law or regulation.

Attorney Docket No.: 22942-0041001 / ZS 8170PCT/US

IN THE UNITED STATES PATENT AND TRADEMARK OFFICE

| | | | |
|---|---|---|---|
| Applicant | : Ulrich Weber et al. | Art Unit | : Unknown |
| Serial No. | : | Examiner | : Unknown |
| Filed | : January 19, 2011 | | |
| Title | : ACTUATORS AND MICROLITHOGRAPHY PROJECTION EXPOSURE SYSTEMS AND METHODS USING THE SAME | | |

Commissioner for Patents
P.O. Box 1450
Alexandria, VA 22313-1450

CLAIM CORRESPONDENCE TABLE

| U.S. Claim | Corresponding DE Claim | Explanation regarding the correspondence |
|---|---|---|
| 1 | 1 | U.S. Claim 1 is the same as DE claim 1 except that the reference numbers have been removed and the claim edited to promote clarity. |
| 2 | 2 | U.S. Claim 2 is the same as DE claim 2 except that the reference numbers have been removed and the claim edited to promote clarity. |
| 3 | 3 | U.S. Claim 3 is the same as DE claim 3 except that the reference numbers have been removed and the claim edited to promote clarity. |
| 4 | 4 | U.S. Claim 4 is the same as DE claim 4 except that the reference numbers have been removed and the claim edited to promote clarity. |
| 5 | 5 | U.S. Claim 5 is the same as DE claim 5 except that the reference numbers have been removed and the claim edited to promote clarity. |
| 6 | 6 | U.S. Claim 6 is the same as DE claim 6 except that the reference numbers have been removed and the claim edited to promote clarity. |
| 7 | 7 | U.S. Claim 7 is the same as DE claim 7 except that the reference numbers have been removed and the claim edited to promote clarity. |
| 8 | 8 | U.S. Claim 8 is the same as DE claim 8 except that the reference numbers have been removed and the claim edited to remove multiple claim dependencies and promote clarity. |
| 9 | 9 | U.S. Claim 9 is the same as DE claim 9 except that the reference numbers have been removed and the claim edited to remove multiple claim dependencies and promote clarity. |
| 10 | 10 | U.S. Claim 10 is the same as DE claim 10 except that the reference numbers have been removed and the claim edited to remove multiple claim dependencies and promote clarity. |
| 11 | 11 | U.S. Claim 11 is the same as DE claim 11 except that the reference numbers have been removed and the claim edited to remove multiple claim dependencies and promote clarity. |
| 12 | 12 | U.S. Claim 12 is the same as DE claim 12 except that the reference numbers have been removed and the claim edited to remove multiple claim dependencies and promote clarity. |
| 13 | 13 | U.S. Claim 13 is the same as DE claim 13 except that the reference numbers have been removed and the claim edited to remove multiple claim dependencies and promote clarity. |
| 14 | 14 | U.S. Claim 14 is the same as DE claim 14 except that the reference numbers have been removed and the claim edited to |

| U.S. Claim | Corresponding DE Claim | Explanation regarding the correspondence |
|---|---|---|
| | | remove multiple claim dependencies and promote clarity. |
| 15 | 15 | U.S. Claim 15 is the same as DE claim 15 except that the reference numbers have been removed and the claim edited to remove multiple claim dependencies and promote clarity. |
| 16 | 16 | U.S. Claim 16 is the same as DE claim 16 except that the reference numbers have been removed and the claim edited to remove multiple claim dependencies and promote clarity. |
| 17 | 17 | U.S. Claim 17 is the same as DE claim 17 except that the reference numbers have been removed and the claim edited to remove multiple claim dependencies and promote clarity. |
| 18 | 18 | U.S. Claim 18 is the same as DE claim 18 except that the reference numbers have been removed and the claim edited to remove multiple claim dependencies and promote clarity. |
| 19 | 19 | U.S. Claim 19 is the same as DE claim 19 except that the reference numbers have been removed and the claim edited to remove multiple claim dependencies and promote clarity. |
| 20 | 20 | U.S. Claim 20 is the same as DE claim 20 except that the reference numbers have been removed and the claim edited to remove multiple claim dependencies and promote clarity. |
| 21 | 21 | U.S. Claim 21 is the same as DE claim 21 except that the reference numbers have been removed and the claim edited to promote clarity. |
| 22 | 22 | U.S. Claim 22 is the same as DE claim 22 except that the reference numbers have been removed and the claim edited to promote clarity. |

IN THE UNITED STATES PATENT AND TRADEMARK OFFICE

Application No. :

U.S. National Serial No. :

Filed :

PCT International Application No. : PCT/EP2009/004892

VERIFICATION OF A TRANSLATION

I, Neil Thomas SIMPKIN BA,

Deputy Managing Director of RWS Group Ltd UK Translation Division, of Europa House, Marsham Way, Gerrards Cross, Buckinghamshire, England declare:

That the translator responsible for the attached translation is knowledgeable in the German language in which the below identified international application was filed, and that, to the best of RWS Group Ltd knowledge and belief, the English translation of the international application No. PCT/EP2009/004892 is a true and complete translation of the above identified international application as filed.

I hereby declare that all the statements made herein of my own knowledge are true and that all statements made on information and belief are believed to be true; and further that these statements were made with the knowledge that willful false statements and the like so made are punishable by fine or imprisonment, or both, under Section 1001 of Title 18 of the United States Code and that such willful false statements may jeopardize the validity of the patent application issued thereon.

Date: December 17, 2010

Signature :

For and on behalf of RWS Group Ltd

Post Office Address : Europa House, Marsham Way,
Gerrards Cross, Buckinghamshire,
England.

# Actuator for high precision positioning and/or manipulation of components, and a projection exposure system for microlithography, and a method

The invention relates to an actuator for high precision positioning and/or manipulation of components, in particular of optical elements or other functional elements in projection exposure systems for semiconductor lithography, and to a method for operating such an actuator. Here, the term "actuator" is to be understood as being synonymous with the terms "final controlling element" and "actuating element" that are likewise used.

There is a regular requirement for the abovenamed components to be positioned and/or manipulated in the nanometer range in order to be able to ensure the overall functionality of the higher level system. It is frequently necessary in this context to monitor the position of the positioned/manipulated components or the alignment thereof in space, with the aid of a high resolution and thus cost intensive and, as the case may be, susceptible measuring and control electronics.

Experience gained with systems from the prior art has shown that the accuracy of the positioning and/or manipulation is chiefly determined in this case not by the actuator technology itself, but by the accuracy of the position measurement. In other words, the actuators can have smaller step widths than can be determined by the position measurement.

However, the actuators of the prior art have in common the problem that the step width of the drive changes as a function of the load that acts on the movable part for the actuator. As a result of this, it is impossible to calculate the output movement, and so the latter has to be monitored with a measuring system. In addition to

this is the fact that slight deviation of the step width builds up over longer travel paths of the actuator.

The problems described are to be explained below with the aid of the piezo actuator described in German Published Patent Application DE 100 225 266 A1. Described in said document is an actuator in the case of which the actuator movable part (that is to say the moving part of the actuator, which acts, as a rule, on the component that is to be manipulated and/or to be positioned) is driven forward via one or more advancing elements ("feet") that are perpendicular to the movable part. Here, the advancing elements move in the direction of the movable part in a fashion perpendicular to their own longitudinal direction.

Since such a foot also exhibits a certain compliance in the direction of the effective direction of the actuator, the step width that is produced by the foot is a function, on the one hand, of the force that the foot itself can apply (advancing force), and on the other hand of the force against which the foot starts to work, or of the force that exerts tension or pression on the movable part of the actuator.

Consequently, a defined advancing force deflects the foot by a defined absolute value, but owing to the compliance of the foot there is superposed on this deflection a second deflection which results from the load on the movable part.

If, for example, a force acts on the movable part in the direction of advance, the step width becomes larger than the nominal step width, that is to say the step width to which the actuator is designed. If, by contrast, a force acts on the movable part against the effective direction, the step width becomes smaller than the nominal step width.

In cases where the load on the movable part changes as the actuator travels, the step width also changes therewith. Consequently, the step width must be checked with an additional high precision displacement sensor but, for reasons of design space and manipulation, this is not always desired or possible.

An alternative type of high-resolution step drives is inertial drives. With these drives, an advancing element, for example a piezoceramic, pushes the movable part slowly in one direction via a friction contact. In this process, the load on the movable part and the acceleration force on the movable part must be smaller than the transferable frictional force in friction contact. Subsequently, the advancing element is withdrawn with a jerk, the required acceleration force of the movable part being larger for the quick backward movement than the frictional force that can be transferred in the friction contact. The movable part therefore remains stationary, while the advancing element turns back in relation to the movable part. However, such drives have the disadvantage that they can exert only a slight force, since the force on the movable part together with the acceleration force (inertial force) of the movable part is not permitted to exceed the transferrable frictional force in the case of the forward movement.

Since, in addition, the movable part cannot be secured when the advancing element is withdrawn with a jerk, the movable part can be "maladjusted" at this instant by an external force on the movable part.

It is the object of the present invention to specify an actuator which, in conjunction with a large force that can be exerted, permits a precise positioning and/or manipulation on actuated components that is largely independent of load.

This object is achieved by an actuator having the features set forth in patent claim 1, and by the method having the features set forth in claim 22. The subclaims relate to advantageous variants and exemplary embodiments of the invention.

The inventive actuator having an effective direction has a housing and a movable part that can be moved in relation to the housing in the effective direction of the actuator, the actuator having an advancing unit that is at least temporarily connected to the movable part. The advancing unit exhibits at least one deformation unit and at least one deformer for deforming the deformation unit; the at least one deformer is suited to deform the deformation unit with a vector component, in particular force component, perpendicular to the effective direction of the actuator in such a way that the total length of the deformation unit changes in the effective direction as a result of the deformation.

The housing can consist of least two housing parts that are interconnected via the deformation unit and they can respectively have at least one locking unit with the aid of which the movable part can be locked on the respective housing part.

The deformation unit can have at least one leaf spring, in particular it can be designed as a pair of springs composed of two opposing leaf springs, at least two deformers being able to be arranged on the pair of springs in such a way that they can bend the springs toward one another from outside.

The movable part can have a first and a second partial movable part, the two partial movable parts being connected via the deformation unit designed as part of the movable part.

In this context, at least two locking units can be present which can respectively lock one of the partial movable parts in relation to the housing.

In order to inhibit the movement of the movable part in the effective direction of the actuator, the actuator can have damping elements.

In an advantageous variant of the invention, the deformation unit can have at least one pressurizable tube.

Alternatively, the deformation unit can have at least one temperature-controllable bimetal, a magnetic spiral spring, a wire spring or else a combination of different spiral springs of different cross section and/or different length.

The deformer can have a piezo element, in particular a piezo stack, an electromagnetic coil, a hydraulic or pneumatic cylinder, or else a pneumatic bellows. In addition, the deformer can be designed as a capacitor with capacitor plates whose electric field leads to a deformation of bending elements arranged between the capacitor plates.

A possible method for operating an inventive actuator having a movable part that has a deformation unit comprises the steps represented below:
- fixing the movable part by a first locking unit located upstream of the deformation unit seen in the direction of movement of the movable part,
- releasing a second locking unit of the movable part that is located downstream of the deformation unit seen in the direction of movement of the movable part,
- deforming the deformation unit by the deformer,
- fixing the movable part by the second locking unit,
- releasing the first locking unit, and
- releasing the deformer from the deformation unit.

In this context, the individual method steps, in particular the two last set forth, can deviate from the sequence given.

Further advantageous refinements and developments of the invention emerge from the subclaims and the exemplary embodiments described in principle below with the aid of the drawing, in which:

figure 1 shows a first embodiment of the invention in the subfigures 1a to 1d;

figure 2 shows in subfigures 2a to 2d a variant of the invention in the case of which a virtually unlimited travel path of the actuator is possible;

figure 3 shows an arrangement in the case of which damping elements are used;

figure 4 shows in the subfigures 4a to 4e a possibility for jerk-free travel of the actuator;

figure 5 shows a use of the actuator for high precision setting of paths;

figures 6 to 19 show possibilities for implementing deformers and deformation elements for applying various technical principles;

figure 20 shows a schematic of the fundamental mechanical principle of the invention;

figure 21 shows a z-manipulator for a projection exposure system for semiconductor lithography in which an inventive actuator is applied; and

figure 22 shows a projection exposure system for semiconductor lithography in the case of which an inventive actuator and/or manipulator such as is illustrated in figure 21 are/is applied.

Figure 1 shows a first embodiment of the invention. The actuator 1 consists in the example shown in figure 1 of the housing 2 and the movable part 3 that is arranged therein and is held at least temporarily by the locking units 41 and 42. In this context, the locking units 41 and 42 need not necessarily hold the movable part 3 by means of mechanical contact; it is also possible to apply contactless locking, for example by electric or magnetic forces. Also arranged in the housing 2 are the deformers 5 which act on the deformation unit 6. In the example shown, the deformation unit 6 is designed such that it consists of two leaf springs 601 that interconnect the two partial movable parts 31 and 32 of the movable part 3. The mode of operation of the inventive actuator 1 is explained below with the aid of the component figures 1a to 1c.

Figure 1a shows the first step in moving the movable part 3 in relation to the housing 2. In the method step shown in figure 1a, the movable part 3 is fixed on its partial movable part 31 by means of the locking units 41; the right-hand partial movable part 32 can be moved freely; the locking units 42 are open. The deformers 5, which act in a fashion perpendicular to the effective direction of the actuator 1, and therefore perpendicular to the direction of movement of the movable part 3, are also retracted into the housing 2.

In the second method step, illustrated in figure 1b, the two deformers 5 are extended and deform the leaf springs 601, which are arranged opposite one another, toward one another so that a shortening of the movable

part 3 in the direction of the arrow 700 occurs as a result of the deflection of the two leaf springs 601. In other words, the right-hand partial movable part 32 vibrates to the left, in the direction of the left-hand partial movable part 31.

In the method step illustrated in figure 1c, the right-hand partial movable part 32 is locked by the associated locking units 42, while the deformers 5 are again drawn into the housing 2 and release the leaf springs 601, although the locking units 41 by means of which the left-hand partial movable part 31 is held are still closed in this state, and so the left-hand movable part 31 still cannot move, as a result.

It is not until the fourth method step illustrated in figure 1d that the left-hand locking units 41 are opened and release the left-hand partial movable part 31 which, as a result, executes a movement to the left in the direction of the arrow 800. This concludes a complete cycle relating to the movement of the movable part 3 in relation to the housing 2 of the actuator 1.

The steps illustrated in figures 1a to 1d can in principle be repeated for as long as is allowed by the geometric conditions of the actuator 1, in particular the expansion of the leaf springs 601 in the effective direction of the actuator 1. It is also possible to operate the actuator 1 illustrated in figure 1 in the direction both of tension and of compression, that is to say to connect either the right-hand partial movable part 32 or the left-hand partial movable part 31 to an element to be moved.

It may be seen from figure 1 that the geometry of the actuator 1, and in particular the fact that the leaf springs 601 are actuated in a fashion perpendicular to the effective direction of the actuator (that is to say, perpendicular to the direction of the arrows 700

and 800) has the advantageous effect of producing, on the one hand, a high speed reduction ratio and, on the other hand, a high stiffness of the actuator 1 in the effective direction.

The maximum force that can be applied by the actuator 1 illustrated in figure 1 corresponds in this context to the Euler buckling load of the leaf springs 601 for a compressive operation of the actuator 1; this restriction does not exist for a tensile operation of the actuator, but the maximum tensile force to be applied is restricted substantially by the force to be applied by deformers 5, and by the E modulus of the leaf springs 601.

The very high speed reduction ratio also enables the maintenance of a constant defined step width irrespective of the load on the movable part 3 by using a deformation restriction to precisely define the relatively large deformation of the leaf springs 601 perpendicular to the effective direction, with the result that the step width in the effective direction is also very precisely determined by the high speed reduction ratio. By way of example, this deformation restriction can be realized in the figures 1a to 1d by virtue of the fact that the leaf springs 601 are caused to sag until they abut one another.

Figure 2 shows a variant of the invention in the case of which the travel path of the movable part 3 is virtually unrestricted. In the variant illustrated in figure 2, the housing of the actuator 1 is designed in two parts consisting of the two housing parts 21 and 22 which are interconnected via the leaf springs 601. In this case, arranged in the first housing part 21 are the first locking units 41, while the second locking units 42 are arranged in the second housing part 22. Likewise located in the first housing part 21 are the deformers 5, which act on the leaf springs 601 in a

fashion substantially analogous to the variant illustrated in figure 1.

In the first method step illustrated in figure 2a, the left-hand locking units 41 are closed and hold the movable part 3, while the right-hand locking units 42 are open so as to release the right-hand part of the movable part 3. The leaf springs 601 are relaxed, since the deformers 5 are drawn in in the first housing part 21.

In the second method step illustrated in figure 2b, the deformers 5 move out from the first housing part 21 and deform the leaf springs 601 in the way already known from figure 1, as a result of which the right-hand housing part 22 with the open locking units 42 moves in the direction of the first housing part 21 along the movable part 3. Subsequently (illustrated in figure 2c), the right-hand locking units 42 are closed, as a result of which the movable part 3 and the left-hand locking units 41 are opened. In the last method step, which is illustrated in figure 2b, the deformers 5 are withdrawn into the first housing part 21, as a result of which the leaf springs 601 relax. Owing to the fact that in the example shown in figure 2 the deformation unit 6, that is to say the leaf springs 601, are connected to the housing parts 21 and 22 and not to the movable part 3, it becomes possible to displace the movable part in relation to the housing parts 21 and 22, virtually over an unrestricted distance.

Particularly in the exemplary embodiment of the invention illustrated in figure 1, it can happen that when the locking units 41 are released, there is a sudden relaxing of the leaf springs 601, and thus an unexpected impulse is exerted on the actuator 1. This problem can be mitigated or avoided, as illustrated in figure 3, by inhibiting the relaxation of the leaf

springs 601 and the movement, attended thereon, of the movable part 3 by the use of the dampers 7, thus permitting the above-described impulse to be largely avoided. The dampers 7 can be designed, by way of example, as hydraulic or else as electromagnetic dampers that are designed as immersion coils.

In the subfigures 4a to 4e, figure 4 shows an alternative possibility of preventing the impulse upon the relaxation of the leaf springs 601. In essence, the illustration in figure 4 corresponds to the illustration in figure 1; as shown in figure 4d and figure 4e, respectively, the difference consists in that the leaf springs 601 are not relaxed until the deformation unit 41 has released the left-hand movable part part 31. The left-hand movable part part 31 can then be controlled by the controlled withdrawal of the deformers 5 in the housing 2.

The high speed reduction ratio that is implemented by the inventive actuator 1 also enables a fine adjustment of the movable part 3 or the actuator 1 to be achieved by a doped actuation of the deformers 5, as illustrated in figure 5. A comparatively long path of the deformers 5 causes a decidedly short travel path of the movable part 3 owing to the geometric conditions of the invention. Thus, given knowledge of the geometric conditions and material constants, it suffices to measure the travel path of the deformers 5, and then to infer the travel path of the movable part 3 that corresponds thereto. This variant of the invention particularly enables the use of a measuring system of low resolution to monitor the travel path, since only the comparatively large travel path of the deformers 5 need be measured. The conversion into the resulting, substantively smaller travel path of the movable part 3 is less affected by errors because, firstly, the inventive actuator prevents a high speed reduction ratio and, secondly, the actuator is of decidedly stiff

design in its effective direction such that the deformation of the movable part 3 in the effective direction depends only to a very small extent on the counterforce applied by the component to be actuated.

If the entire path that is covered by the movable part 3 is composed of a plurality of individual steps, this path can be determined from the sum of the deformation movements by taking account of the precisely known speed reduction ratio between deformer 5 and movable part 3. It is therefore no longer necessary to make available a high precision measuring system for the entire movable part travel path, as is currently required. With the actuator in accordance with the invention, it suffices to this end to make use for the deformer 5 of a measuring system that covers only the small travel range of the deformer 5 and, because of the high speed reduction ratio, has no need of resolution as high as the measuring systems previously used for this purpose.

Various possibilities for embodying the deformation units and deformer are sketched in figures 6 to 19.

Thus, in figures 6 to 9 the deformation units 6 are implemented as leaf springs 601 (only one leaf spring being illustrated in each case). The deformer is embodied in figure 6 as a piezo element 501, in figure 7 as an electromagnetic coil 502 with iron core, in figure 8 as a hydraulic cylinder with associated hydraulic ram 503, and in figure 9 as a pneumatic bellows 504 between the two leaf springs 601. In figure 10, the deformation unit is implemented as a thin-walled tube 610 to which a certain pressure can be applied from the tube interior. The tube 610 in this case exhibits a double functionality as bellows and spiral spring.

Figure 11 illustrates the possibility of a thermal

drive in which the deformation unit 6 is implemented as a pair of bimetal strips. The sagging of the bimetal strips 620 takes place in this case through the supply and removal of heat, as illustrated in subfigures 11b and 11c. Figure 11a shows the arrangement in the neutral state. Likewise, the deformation unit can be represented as a combination of two magnetic coils 505 with the magnetic spiral springs 630, as illustrated in figure 12.

In addition, it is also possible to use as deformer a capacitor with capacitor plates 506 whose electric field leads to a deformation of the bending elements 640 arranged between the capacitor plates 506.

Figures 14 to 19 show further possibilities for forming deformation element 6. The possibility, already presented, of a leaf spring 601 is presented in figure 14, whereas a wire spring 650 is used in figure 15. As illustrated in figure 16, it is also possible to consider a deformation element 660 with any desired cross section. Figure 17 shows a variant in the case of which use is made as deformation element of a combination of various spiral springs 670 of different cross section and different length, this enabling an adaptation of the actuator effect to the respectively prevailing requirements for the use of the inventive actuator.

Figure 18 shows a possibility where, in the effective direction of the actuator, the deformation unit has at least two sections with different elastic properties. This is implemented by virtue of the fact that a solid intermediate piece 681 is arranged in the spiral spring 680. A defined bearing surface for the deformers not illustrated in figure 18 is provided by the solid intermediate piece 681. As a result, defined conditions for the action of force of the deformers on the deformation element prevail over a restricted region

even in the case of a sideways movement of the movable part.

In subfigures a, b and c, figure 19 shows various possibilities for configuring as deformation element 610 a thin-walled tube to which pressure can be applied from inside.

The functional principle of the largely load-independent movable part step width can be explained with the aid of figure 20:

The movable part with deformation unit is simulated by an equivalent mechanical model that consists of four rods which are interconnected by three pivot joints, a torsion spring being arranged in parallel with the middle pivot joint.

The inner rods respectively have the length a; the torsion spring has the torsion spring stiffness of $k_\varphi$.

The rod outside on the right is secured by a locking unit, while the rod outside on the left is guided linearly (for example by an open locking unit).

The deformer has deflected the middle pivot joint via the path v, the inner rods thereby adopting the angle $\varphi$ to the horizontal.

Acting on the rod outside on the left is the force F, which exerts on the middle pivot joint the bending moment $M_{bend}$ that tends to bend the middle pivot joint. The bending moment $M_{bend}$ results from the offset of the path v and the force F

$M_{bend} = F*v$.

The path v is a function of the bending angle $2*\varphi$ of the middle pivot joint via the length a of the inner

rods, specifically

$v = a*\sin[(2*\varphi/2] = a*\sin(\varphi)$.

A linearization can be adopted as an approximation for small paths v and angle φ for more specifically

$v = a*\varphi$.

The bending moment $M_{bend}$ can therefore be represented as a function of half the bending angle φ of the middle pivot joint, specifically

$M_{bend} = F*a*\varphi$.

On the other hand, the torsion spring exerts on the middle pivot joint the extending moment $M_{extend}$ that tends to extend the pivot joint and the overall movable part.
The entending moment $M_{extend}$ is given by the bending angle $2*\varphi$ of the middle pivot joint and the torsion spring stiffness $k_\varphi$, specifically

$M_{extend} = k_\varphi*2*\varphi = 2*k_\varphi*\varphi$.

The movable part is again extend completely when the bending moment $M_{bend}$ is smaller than the extending moment $M_{extend}$, specifically:

$M_{bend} < M_{extend}$

$F*a*\varphi < 2*k_\varphi*\varphi$

$F*a < 2*k_\varphi$.

The inequality yields for the force F a bound that the force F may not exceed such that the movable part is again completely extended.
This bound is the critical force $F_{crit}$, specifically

$F < (2*k_{\varphi})/a = F_{crit}$.

Under the condition that the force F is smaller than the critical force $F_{crit}$ and remains so, the movable part again will extend completely such that the step width of the movable part, which results from the extending movement of the movable part, is independent of the force F.

The independence of the step width from the force F can be explained by virtue of the fact that the extending moment $M_{extend}$ about the zero position (extended position) of the movable part grows more strongly than the bending moment $M_{bend}$ when the force F is smaller than the critical force $F_{crit}$.

For a real leaf spring, the critical force $F_{crit}$ corresponds to the Euler buckling load in the corresponding case of buckling load.

It is to be remarked in addition that the deformation unit need not necessarily have elastic components. It is likewise conceivable that the deformation of the deformation unit is performed by a deformer that can exert both pressure and tension. This would then require the deformation itself not necessarily to apply a restoring force.

Because of its high stiffness, its high positioning forces and its largely load-independent step width, the actuator is suitable for areas of use in which, given a very high required positioning accuracy, a measurement of the position of the object to be adjusted in order to drive the actuator can be implemented only with great difficulty, or there is a need to position very large masses.

These requirements exist, for example, in the case of

z-manipulators in a semiconductor lithography objective, which in order to correct aberrations position lenses very accurately in the z-direction before operation begins, and finely set the lenses in the z-direction about this position in real time during operation, in order to correct aberrations that are caused by fluctuation in the operating environment; an example is given in figure 21.

A z-manipulator can in this case be designed such that a lens 100 is mounted in an inner ring 101 that is, in turn, supported by three actuators 1 in accordance with the invention, whose effective direction is oriented parallel to the z-direction.

The three actuators 1 are embedded in an outer ring 102 that, in its outer region, forms the interface to the objective structure (not illustrated).

Owing to the high actuating stiffness, the actuators 1 can support the inner ring 101 together with the lens 100 directly in the z-direction, without the system composed of lens 100, inner ring 101 and actuators 1 becoming susceptible to oscillation.

The sensor for the middle position 103 can be used to place the actuator 1 approximately in the middle position again after a power failure.

In order to correct aberrations before operation, the actuators 1 can move the lens 100 into the z-position in stepping mode, a sensor which records exactly the z-position of the lens 100 not being required, since the step width is fairly accurately defined owing to its far reaching load independence. In order to reach the desired z-position, however, there is a need to count the number of steps executed.

The actuator 1 can be used in the fine adjustment mode

in accordance with figure 5 for the fluctuations about the middle z-position.

Figure 22 illustrates a projection exposure system 310 for semiconductor lithography in which use is made of the inventive actuator. The system serves to expose structures on a substrate that is coated with photosensitive materials and generally consists mostly of silicon and is denoted as wafer 320, for the purpose of producing semiconductor components such as, for example, computer chips.

The projection exposure system 310 consists in this case substantially of an illumination system 330, a device 340 for holding and exactly positioning a mask, a so-called reticle 350, provided with a structure by means of which the later structures on the wafer 320 are determined, a device 360 for holding, moving and exact positioning just this wafer 320, and an imaging device, specifically a projection objective 370, having a plurality of optical elements 380 that are supported via mounts 390 in an objective housing 400 of the projection objective 370.

The fundamental functional principle provides in this case that the structures inserted into the reticle 350 are imaged onto the wafer 320; the imaging is executed with the demagnification.

After performance of exposure, the wafer 320 is moved further in the direction of the arrow such that a multiplicity of individual fields are exposed on the same wafer 320, in each case having the structure prescribed by the reticle 350. Owing to the stepwise advancing movement of the wafer 320 in the projection exposure system 310, the latter is also frequently designated as a stepper.

The illumination system 330 provides a projection beam

410, for example light or a similar electromagnetic radiation, for imaging the reticle 350 on the wafer 320. A laser or the like can be used as the source for this radiation. Radiation is shaped in the illumination system 330 via optical elements such that when impinging on the reticle 350 the projection beam 410 has the desired properties with regard to diameter, polarization, shape of the wave front and the like.

The beams 410 generate an image of the reticle 350 that is transmitted on the wafer 320 by the projection objective 370 in an appropriately demagnified fashion, as has already been explained above. Projection objective 370 has a multiplicity of individual refractive, diffractive and/or reflective optical elements 380 such as, for example, lenses, mirrors, prisms, closure plates and the like. In this case, one or more of the optical elements can be arranged in a manipulator in the manner of the manipulator illustrated in figure 21.

The z-direction is indicated in the present illustration in accordance with figure 21.

Patent Claims:

1. An actuator (1) having an effective direction, having a housing (2) and a movable part (3) that can be moved in relation to the housing (2) in the effective direction of the actuator (1), characterized in that the actuator (1) has an advancing unit that is at least temporarily connected to the movable part (3), and the advancing unit having at least one deformation unit (6, 601, 610, 620, 630, 640, 650, 660, 670, 680) and at least one deformer (5, 501, 502, 503, 504, 505, 506) for deforming the deformation unit (6, 601, 610, 620, 630, 640, 650, 660, 670, 680), the at least one deformer (5, 501, 502, 503, 504, 505, 506) being suited to deform the deformation unit (6, 601, 610, 620, 630, 640, 650, 660, 670, 680) with a vector component perpendicular to the effective direction of the actuator (1) in such a way that the total length of the deformation unit (6, 601, 610, 620, 630, 640, 650, 660, 670, 680) changes in the effective direction as a result of the deformation.

2. The actuator (1) as claimed in claim 1, characterized in that the housing (2) consists of at least two housing parts (21, 22) that can be interconnected via the deformation unit (see above).

3. The actuator (1) as claimed in claim 2, characterized in that the at least two housing parts (21, 22) respectively have at least one locking unit (41, 42) with the aid of which the movable part can be locked on the respective housing part (21, 22).

4. The actuator (1) as claimed in claim 3, characterized in that the deformation unit (6) has

at least one leaf spring (601).

5. The actuator (1) as claimed in claim 3, characterized in that the deformation unit (6) is designed as a pair of springs composed of two opposing leaf springs (601), and in that at least two deformers (5) are arranged on the pair of springs in such a way that they can bend the leaf springs (601) toward one another from outside.

6. The actuator (1) as claimed in claim 1, characterized in that the movable part (3) has a first and a second partial movable part (31, 32) that are connected via the deformation unit (6) designed as part of the movable part (3).

7. The actuator (1) as claimed in claim 6, characterized in that at least two locking units (41, 42) that can respectively lock one of the partial movable parts (31, 32) in relation to the housing (21, 22) are present.

8. The actuator (1) as claimed in one of the preceding claims, characterized in that the actuator (1) has damping elements (7) for inhibiting the movement of the movable part (3) in the effective direction of the actuator (1).

9. The actuator (1) as claimed in one of the preceding claims, characterized in that the deformation unit (6) has at least one pressurizable tube (601).

10. The actuator (1) as claimed in one of the preceding claims 1 to 9, characterized in that the deformation unit (6) has at least one temperature-controllable bimetal (620).

11. The actuator (1) as claimed in one of the

preceding claims 1 to 9, characterized in that the deformation unit (6) has at least one magnetic spiral spring (630).

12. The actuator (1) as claimed in one of the preceding claims 1 to 9, characterized in that the deformation unit (6) has at least one wire spring (650).

13. The actuator (1) as claimed in one of the preceding claims 1 to 9, characterized in that the deformation unit (6) has a combination of different spiral springs (670) of different cross section and/or different length.

14. The actuator (1) as claimed in one of the preceding claims, characterized in that the deformation unit (6) has at least two sections (680, 681) with different elastic properties in the effective direction of the actuator (1).

15. The actuator (1) as claimed in one of the preceding claims, characterized in that the deformer (5) has a piezo element, in particular a piezo stack (810).

16. The actuator (1) as claimed in one of the preceding claims, characterized in that the deformer (5) has an electromagnetic coil (502).

17. The actuator (1) as claimed in one of the preceding claims, characterized in that the deformer (5) has a hydraulic or pneumatic cylinder (503).

18. The actuator (1) as claimed in one of the preceding claims, characterized in that the deformer has a pneumatic bellows (504).

19. The actuator (1) as claimed in one of the preceding claims, characterized in that the deformer (5) is designed as a capacitor with capacitor plates (506) whose electric field leads to a deformation of bending elements (640) arranged between the capacitor plates (506).

20. A projection exposure system (310) for semiconductor lithography, having an actuator (1) as claimed in one of the preceding claims, for the purpose of moving an optical element (100) of the projection exposure system (310) in the direction of the optical axis of the projection exposure system (310) or of a part of the projection exposure system (310).

21. The projection exposure system (310) as claimed in claim 20, characterized in that the optical element (100) is connected to further components of the projection exposure system (310) exclusively via the actuators (1).

22. The method for operating an actuator (1) having an effective direction, a housing (2) and a movable part (3) that can be moved in relation to the housing (2) in the effective direction of the actuator (1), the movable part (3) having a deformation unit (6) and is moved by the following steps

- fixing the movable part (3) by a first locking unit (41) located upstream of the deformation unit (6) seen in the direction of movement of the movable part,
- releasing a second locking unit (42) of the movable part (3) that is located downstream of the deformation unit seen in the direction of movement of the movable part (3),
- deforming the deformation unit (6) by a deformer,

- fixing the movable part by the second locking unit (42),
- releasing the first locking unit (41), and
- releasing the deformer (5) from the deformation unit (6).

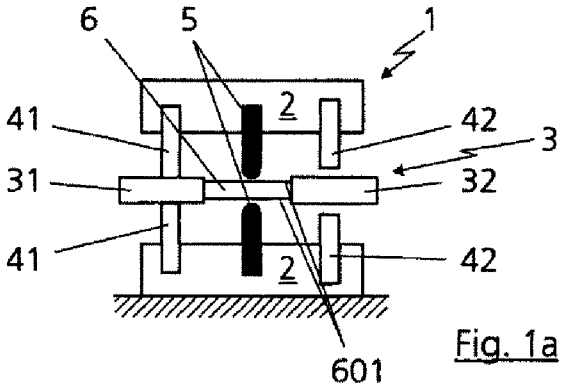


Fig. 1a

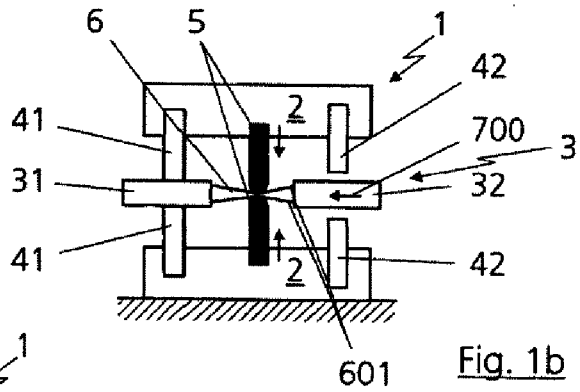


Fig. 1b

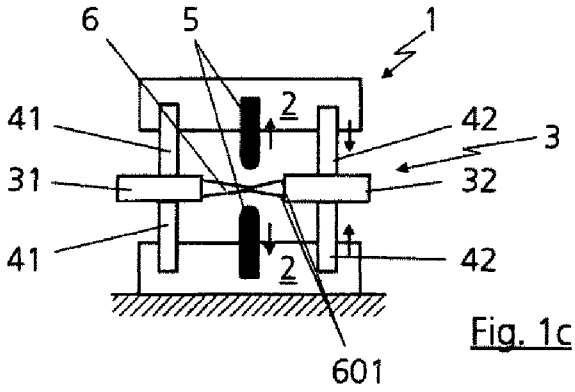


Fig. 1c

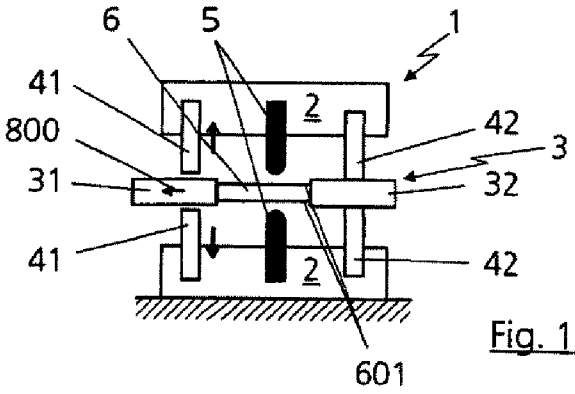


Fig. 1d

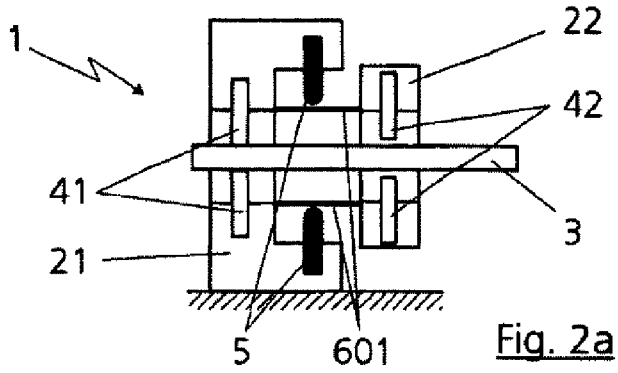


Fig. 2a

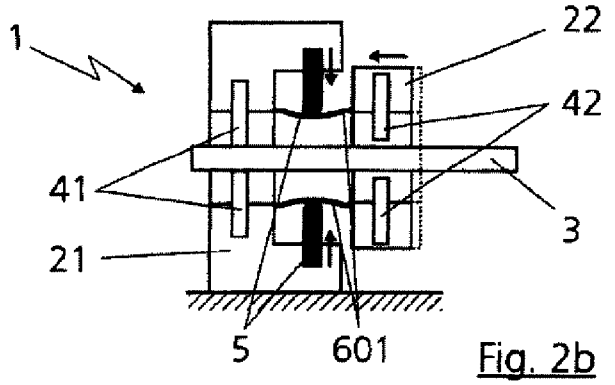


Fig. 2b

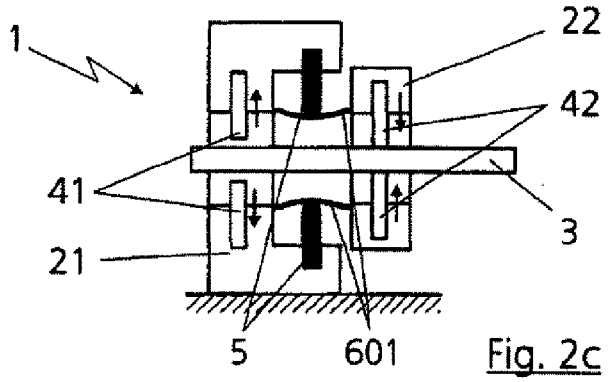


Fig. 2c

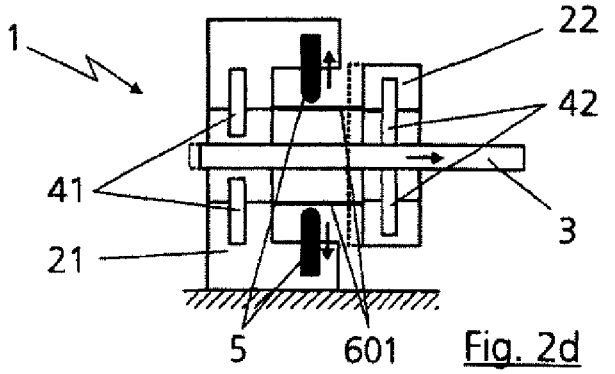


Fig. 2d

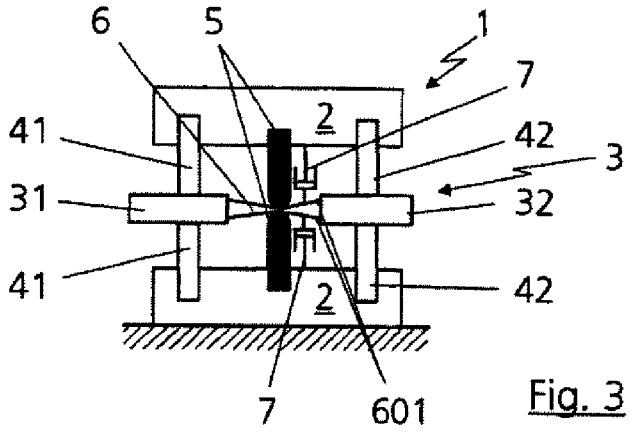


Fig. 3

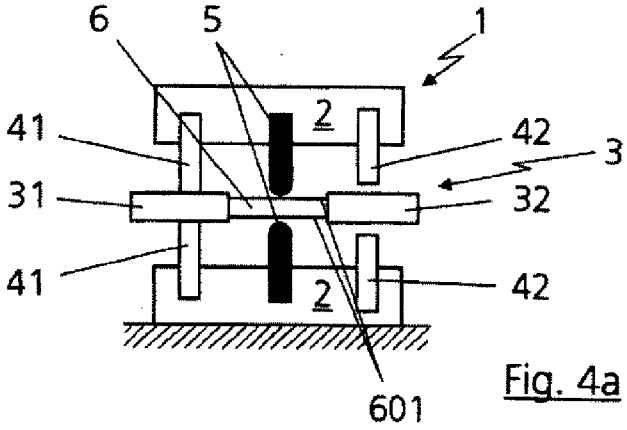


Fig. 4a

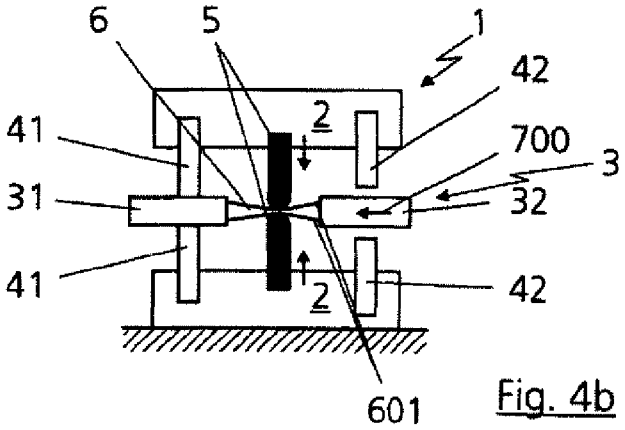


Fig. 4b

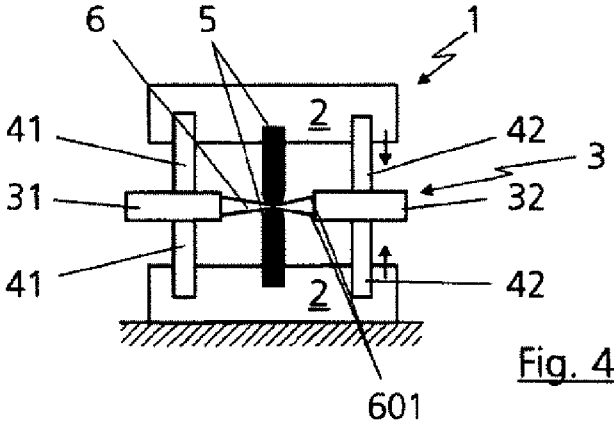


Fig. 4c

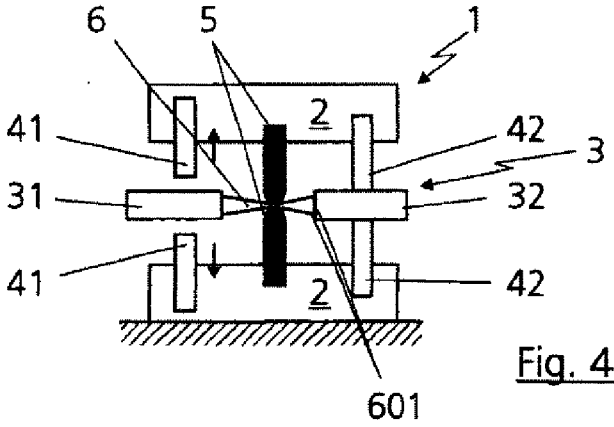


Fig. 4d

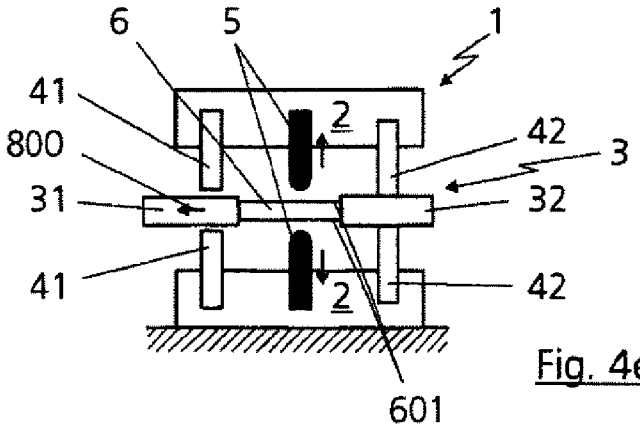


Fig. 4e

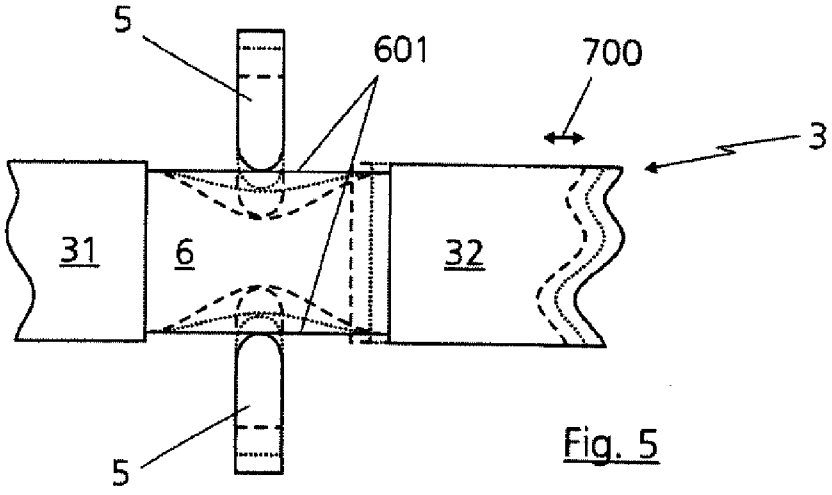


Fig. 5

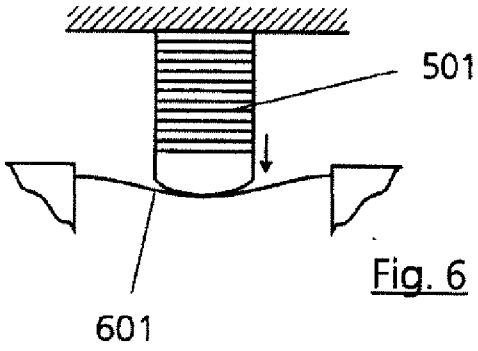


Fig. 6

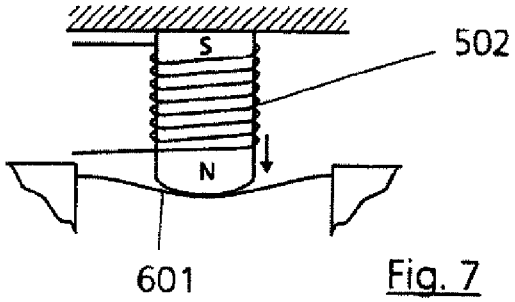


Fig. 7

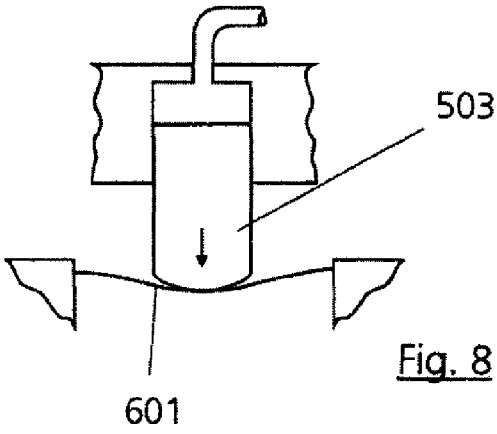


Fig. 8

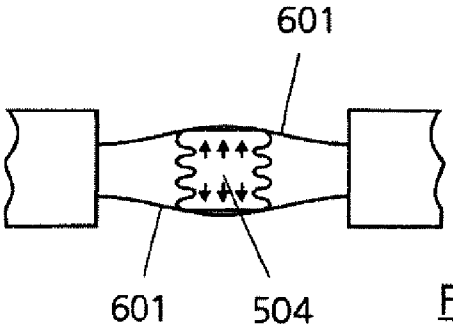


Fig. 9

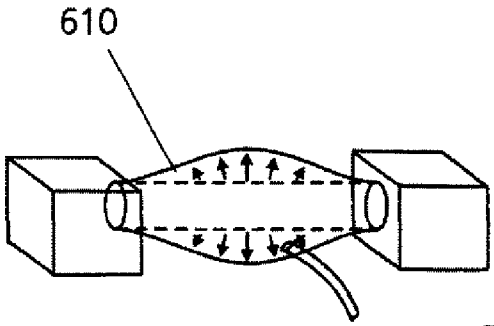


Fig. 10

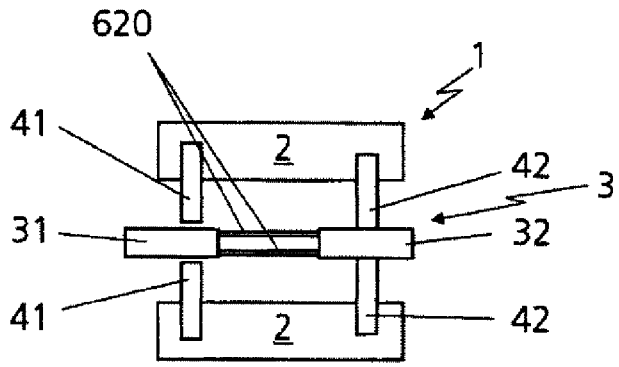


Fig. 11a

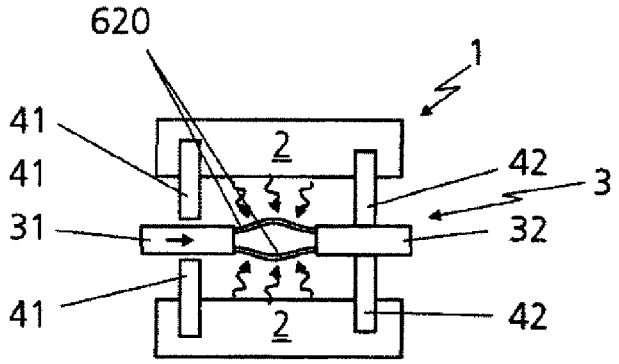


Fig. 11b

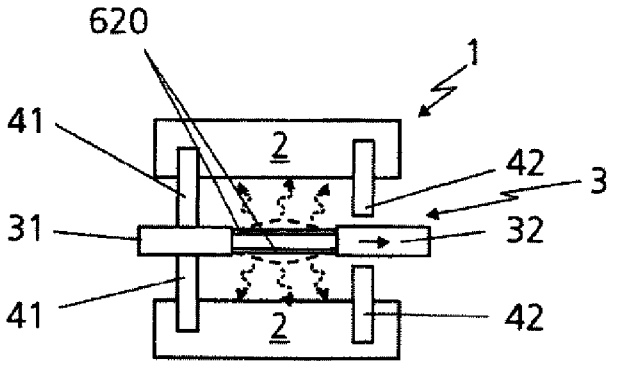


Fig. 11c

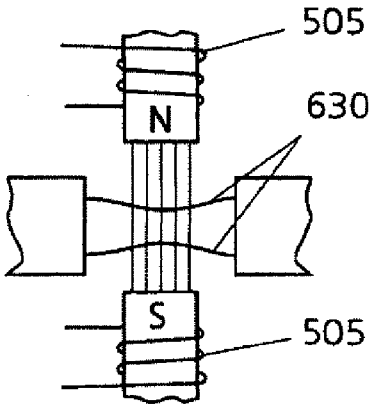


Fig. 12

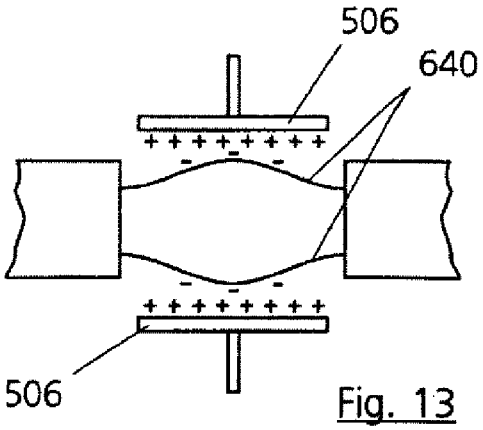


Fig. 13

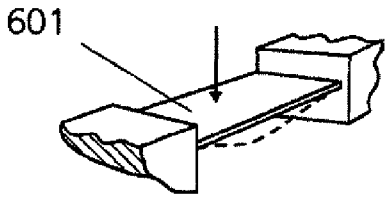


Fig. 14

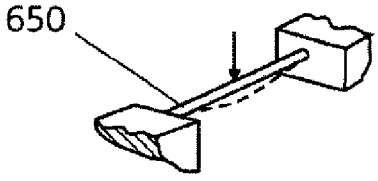


Fig. 15

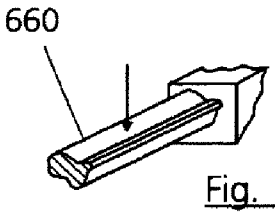


Fig. 16

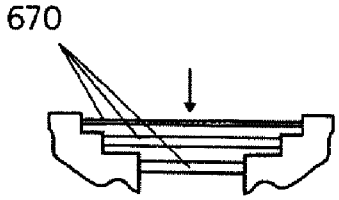


Fig. 17

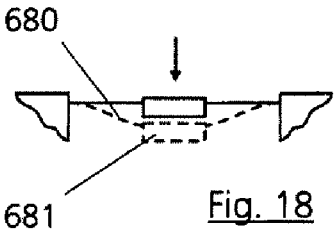


Fig. 18

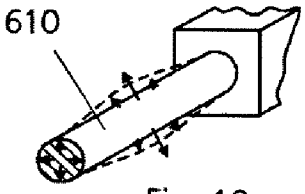


Fig. 19a

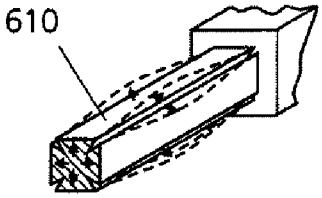


Fig. 19b

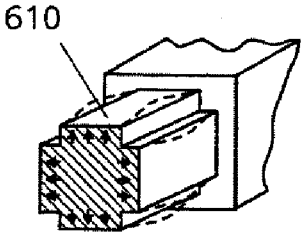


Fig. 19c

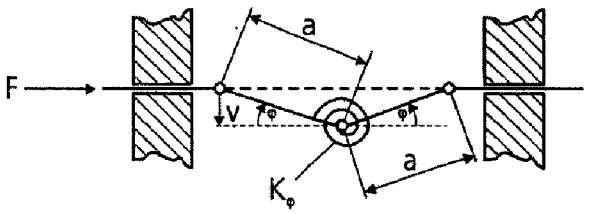


Fig. 20

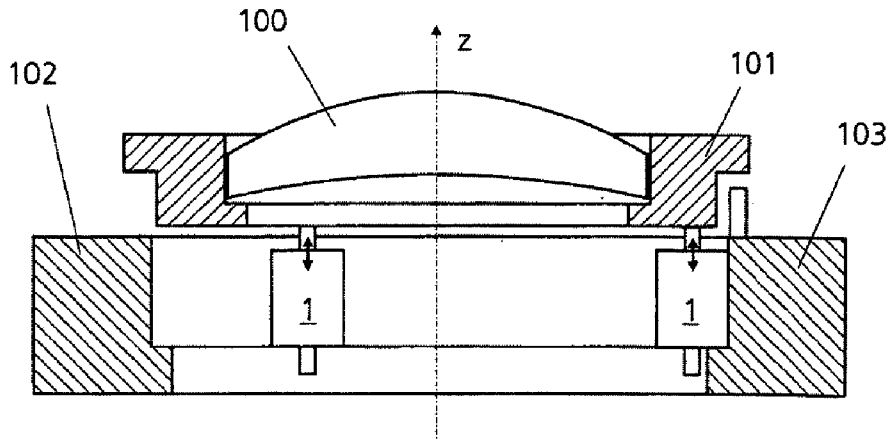


Fig. 21

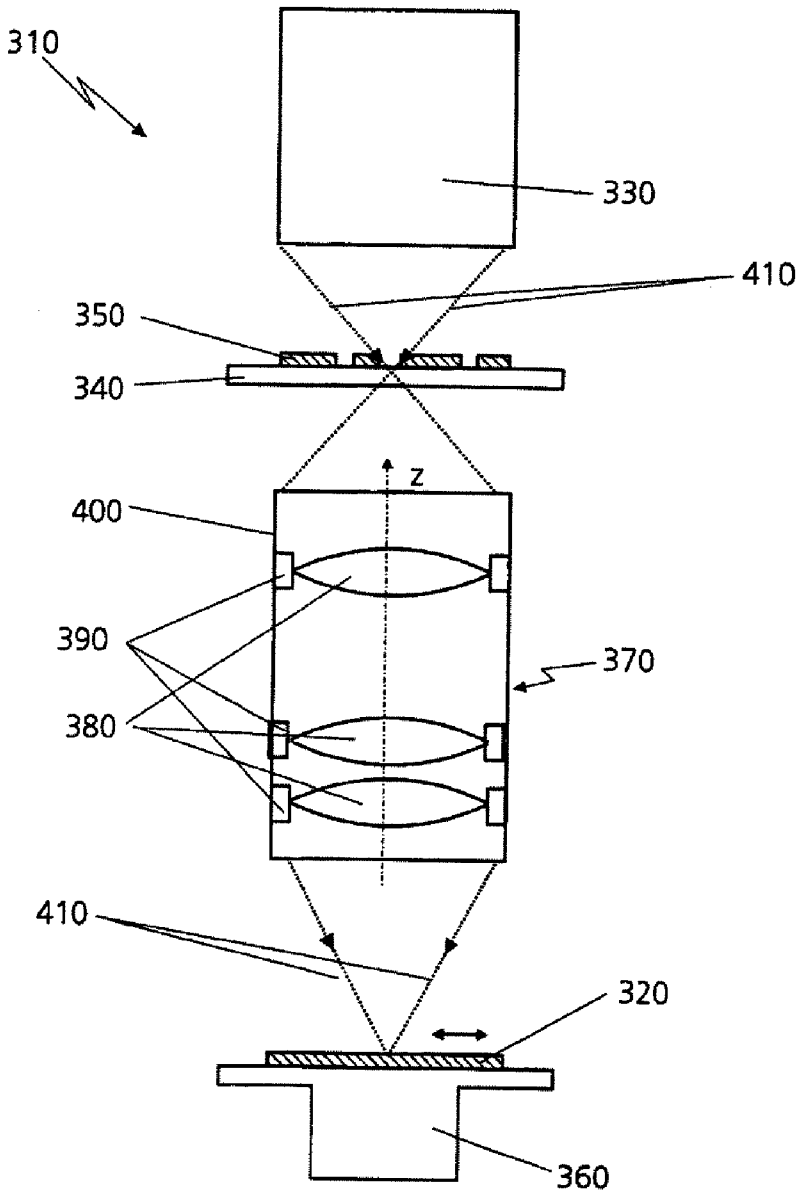


Fig. 22

UNITED STATES PATENT AND TRADEMARK OFFICE

UNITED STATES DEPARTMENT OF COMMERCE
United States Patent and Trademark Office
Address: COMMISSIONER FOR PATENTS
P.O. Box 1450
Alexandria, Virginia 22313-1450
www.uspto.gov

| APPLICATION NO. | FILING DATE | FIRST NAMED INVENTOR | ATTORNEY DOCKET NO. | CONFIRMATION NO. |
|---|---|---|---|---|
| 13/009,438 | 01/19/2011 | Ulrich Weber | 22942-0041001 / ZS 8170PC | 1733 |

26161 7590 04/27/2011
FISH & RICHARDSON P.C. (BO)
P.O. BOX 1022
MINNEAPOLIS, MN 55440-1022

| EXAMINER | |
|---|---|
| GLICK, EDWARD J | |

| ART UNIT | PAPER NUMBER |
|---|---|
| 2882 | |

| NOTIFICATION DATE | DELIVERY MODE |
|---|---|
| 04/27/2011 | ELECTRONIC |

**Please find below and/or attached an Office communication concerning this application or proceeding.**

The time period for reply, if any, is set in the attached communication.

Notice of the Office communication was sent electronically on above-indicated "Notification Date" to the following e-mail address(es):

PATDOCTC@fr.com

UNITED STATES PATENT AND TRADEMARK OFFICE

Commissioner for Patents
United States Patent and Trademark Office
P.O. Box 1450
Alexandria, VA 22313-1450
www.uspto.gov

**FISH & RICHARDSON P.C. (BO)**
**P.O. BOX 1022**
**MINNEAPOLIS MN 55440-1022**

**In re Application of**
**WEBER et al.**
**Application No.: 13/009,438**
**Filed: 19 January 2011**
**Attorney Docket No.: 22942-0041001 / ZS 8170PC**
**For: ACTUATORS AND MICROLITHOGRAPHY PROJECTION EXPOSURE SYSTEMS AND METHODS USING THE SAME**

**: DECISION ON REQUEST TO**
**: PARTICIPATE IN THE PATENT**
**: PROSECUTION HIGHWAY**
**: PROGRAM AND PETITION**
**: TO MAKE SPECIAL UNDER**
**: 37 CFR 1.102(a)**

This is a decision on the request to participate in the PCT Patent Prosecution Highway* (PCT-PPH) pilot program and the petition under 37 CFR 1.102(a), filed 19 January 2011, to make the above-identified application special.

*** The instant petition was filed under the PPH agreement with DPMA. However, the petition should have been filed under the PCT-PPH agreement with the EPO since the allowed/patentable claims are in PCT/EP2009/004892. The Petition is being treated under the PCT-PPH agreement.**

The request and petition are **DISMISSED**.

**Discussion**

A grantable request to participate in the PCT-PPH pilot program and petition to make special require:

(1) The U.S. application must have an eligible relationship to one or more PCT applications where the ISA or IPEA are the JPO, EPO, KIPO, IPAU, Russia, Spain, Finland, Austria, or USPTO;

(2) At least one claim in the PCT application has novelty, inventive step, and industrial applicability and must be free of any observations in Box VIII in the latest work product in the international stage or applicant must identify and explain why the claim(s) is/are not subject to the observation in Box VIII;

(3) Applicant must submit a copy of the claim(s) from the PCT application(s) that have novelty, inventive step, and industrial applicability along with an English translation thereof and a statement that the English translation is accurate, if the claims are not in the English language;

(4) All the claims in the U.S. application must sufficiently correspond or be amended to sufficiently correspond to the claim(s) that have novelty, inventive step, and industrial applicability in the PCT application(s);

(5) Examination of the U.S. application has not begun;

(6) Applicant must submit a copy of the latest international work product from the PCT application indicating that the claim(s) have novelty, inventive step, and industrial applicability along with an English translation thereof.

(7) Applicant must submit an IDS listing the documents cited by the PCT examiner in the international work product along with copies of documents except U.S. patents or U.S. patent application publications.

Requirements (1-5) and (7) above are considered to have been met. However, the request to participate in the PPH pilot program and petition fails meet requirement (6).

Regarding the requirement of condition (6), applicant has failed to submit an English translation of the Written Opinion (ISA/237) from the PCT application indicating that the claims have novelty, inventive step, and industrial applicability.

Applicant is given **ONE** opportunity within a time period of **ONE MONTH or THIRTY DAYS**, whichever is longer, from the mailing date of this decision to correct the deficiencies. **NO EXTENSION OF TIME UNDER 37 CFR 1.136 IS PERMITTED.** If the deficiencies are not corrected with the time period given, the application will await action in its regular turn.

Response must be filed via the Electronic Filing System (EFS) using the document description: Petition to make special under PCT – Patent Pros Hwy. Any preliminary amendments and IDS submitted with the PPH documents must be separately indexed as a preliminary amendment and IDS, respectively.

Telephone inquiries concerning this decision should be directed to Lee W. Young at 571-272-4549.

All other inquiries concerning the examination or status of the application is accessible in the PAIR system at http://www.uspto.gov/ebc/index.html.

Lee W. Young
TQAS Technology Center 2800 - Semiconductors,
Electrical & Optical Systems & Components

**Doc Code: PPH.PCT.652**
**Document Description: Petition to make special under PCT-Patent Pros Hwy**

PTO/SB/20PCT-EP (05-10)
Approved for use through 01/31/2012. OMB 0651-0058
U.S. Patent and Trademark Office; U. S. DEPARTMENT OF COMMERCE
Under the Paperwork Reduction Act of 1995, no persons are required to respond to a collection of information unless it displays a valid OMB control number.

# REQUEST FOR PARTICIPATION IN THE PATENT COOPERATION TREATY - PATENT PROSECUTION HIGHWAY (PCT-PPH) PILOT PROGRAM BETWEEN THE EUROPEAN PATENT OFFICE (EPO) AND THE USPTO

| | | | |
|---|---|---|---|
| Application No: | 13/009438 | Filing date: | January 19, 2011 |
| First Named Inventor: | Ulrich Weber | | |
| Title of the Invention: | ACTUATORS AND MICROLITHOGRAPHY PROJECTION EXPOSURE SYSTEMS AND METHODS USING THE SAME | | |

**THIS REQUEST FOR PARTICIPATION IN THE PCT-PPH PILOT PROGRAM ALONG WITH THE REQUIRED DOCUMENTS MUST BE SUBMITTED VIA EFS-WEB. INFORMATION REGARDING EFS-WEB IS AVAILABLE AT HTTP://WWW.USPTO.GOV/EBC/EFS_HELP.HTML**

**APPLICANT HEREBY REQUESTS PARTICIPATION IN THE PCT-PPH PROGRAM AND PETITIONS TO MAKE THE ABOVE-IDENTIFIED APPLICATION SPECIAL UNDER THE PCT-PPH PROGRAM.**

The above-identified application is (1) a national stage entry of the corresponding PCT application, or (2) a national stage entry of another PCT application which claims priority to the corresponding PCT application, or (3) a national application that claims domestic/ foreign priority to the corresponding PCT application, or (4) a national application which forms the basis for the priority claim in the corresponding PCT application, or (5) a continuing application of a U.S. application that satisfies one of (1) to (4) above, or (6) a U.S. application that claims domestic benefit to a U.S. provisional application which forms the basis for the priority claim in the corresponding PCT application.

**The corresponding PCT application number(s) is/are:** PCT/EP2009/004892

**The international filing date of the corresponding PCT application(s) is/are:** July 7, 2009

**I. List of Required Documents:**

a. **A copy of the latest international work product (WO/ISA, WO/IPEA, or IPER) in the above–identified corresponding PCT application(s)**

☒ Is attached

☐ Is not attached because the document is already in the U.S. application.

b. **A copy of all claims which were indicated as having novelty, inventive step and industrial applicability in the above-identified corresponding PCT application(s).**

☒ Is attached.

☐ Is not attached because the document is already in the U.S. application.

c. **English translations of the documents in a. and b. above are attached (if the documents are not in the English language). A statement that the English translation is accurate is attached for the document in b. above.**



This collection of information is required by 35 U.S.C. 119, 37 CFR 1.55, and 37 CFR 1.102(d). The information is required to obtain or retain a benefit by the public, which is to file (and by the USPTO to process) an application. Confidentiality is governed by 35 U.S.C. 122 and 37 CFR 1.11 and 1.14. This collection is estimated to take 2 hours to complete, including gathering, preparing, and submitting the completed application form to the USPTO. Time will vary depending upon the individual case. Any comments on the amount of time you require to complete this form and/or suggestions for reducing this burden should be sent to the Chief Information Officer, U.S. Patent and Trademark Office, U.S. Department of Commerce, P.O. Box 1450, Alexandria, VA 22313-1450. DO NOT SEND FEES OR COMPLETED FORMS TO THIS ADDRESS.

PTO/SB/20PCT-EP (05-10)
Approved for use through 01/31/2012. OMB 0651-0058
U.S.Patent and Trademark Office; U.S. DEPARTMENT OF COMMERCE
Under the Paperwork Reduction Act of 1995, no persons are required to respond to a collection of information unless it displays a valid OMB control number.

# REQUEST FOR PARTICIPATION IN THE PCT-PPH PILOT PROGRAM BETWEEN THE EPO AND THE USPTO

(continued)

| | |
|---|---|
| Application No.: | |
| First Named Inventor: | |

d. **(1) An information disclosure statement listing the documents cited in the international work products (ISR, WO/ISA, WO/IPEA, IPER) of the corresponding PCT application.**

☒ Is attached

☐ Has already been filed in the above-identified U.S. application on _____

**(2) Copies of all documents (except) for U.S. patents or U.S. patent application publications)**

☒ Are attached.

☐ Have already been filed in the above-identified U.S. application on _____

**II. Claims Correspondence Table:**

| Claims in US Application | Patentable Claims in the corresponding PCT Application | Explanation regarding the correspondence |
|---|---|---|
| see attached | | |
| | | |
| | | |
| | | |
| | | |
| | | |
| | | |
| | | |
| | | |
| | | |
| | | |
| | | |
| | | |
| | | |
| | | |
| | | |
| | | |
| | | |

**III. All the claims in the US application sufficiently correspond to the patentable claims in the corresponding PCT application.**

| | |
|---|---|
| Signature /Chris Bowley, Reg. No. 55,016/ | Date 5/19/11 |
| Name (Print/Typed) Chris C. Bowley | Registration Number 55,016 |

# Privacy Act Statement

The **Privacy Act of 1974 (P.L. 93-579)** requires that you be given certain information in connection with your submission of the attached form related to a patent application or patent. Accordingly, pursuant to the requirements of the Act, please be advised that: (1) the general authority for the collection of this information is 35 U.S.C. 2(b)(2); (2) furnishing of the information solicited is voluntary; and (3) the principal purpose for which the information is used by the U.S. Patent and Trademark Office is to process and/or examine your submission related to a patent application or patent. If you do not furnish the requested information, the U.S. Patent and Trademark Office may not be able to process and/or examine your submission, which may result in termination of proceedings or abandonment of the application or expiration of the patent.

The information provided by you in this form will be subject to the following routine uses:

1. The information on this form will be treated confidentially to the extent allowed under the Freedom of Information Act (5 U.S.C. 552) and the Privacy Act (5 U.S.C 552a). Records from this system of records may be disclosed to the Department of Justice to determine whether disclosure of these records is required by the Freedom of Information Act.
2. A record from this system of records may be disclosed, as a routine use, in the course of presenting evidence to a court, magistrate, or administrative tribunal, including disclosures to opposing counsel in the course of settlement negotiations.
3. A record in this system of records may be disclosed, as a routine use, to a Member of Congress submitting a request involving an individual, to whom the record pertains, when the individual has requested assistance from the Member with respect to the subject matter of the record.
4. A record in this system of records may be disclosed, as a routine use, to a contractor of the Agency having need for the information in order to perform a contract. Recipients of information shall be required to comply with the requirements of the Privacy Act of 1974, as amended, pursuant to 5 U.S.C. 552a(m).
5. A record related to an International Application filed under the Patent Cooperation Treaty in this system of records may be disclosed, as a routine use, to the International Bureau of the World Intellectual Property Organization, pursuant to the Patent Cooperation Treaty.
6. A record in this system of records may be disclosed, as a routine use, to another federal agency for purposes of National Security review (35 U.S.C. 181) and for review pursuant to the Atomic Energy Act (42 U.S.C. 218(c)).
7. A record from this system of records may be disclosed, as a routine use, to the Administrator, General Services, or his/her designee, during an inspection of records conducted by GSA as part of that agency's responsibility to recommend improvements in records management practices and programs, under authority of 44 U.S.C. 2904 and 2906. Such disclosure shall be made in accordance with the GSA regulations governing inspection of records for this purpose, and any other relevant ( *i.e.*, GSA or Commerce) directive. Such disclosure shall not be used to make determinations about individuals.
8. A record from this system of records may be disclosed, as a routine use, to the public after either publication of the application pursuant to 35 U.S.C. 122(b) or issuance of a patent pursuant to 35 U.S.C. 151. Further, a record may be disclosed, subject to the limitations of 37 CFR 1.14, as a routine use, to the public if the record was filed in an application which became abandoned or in which the proceedings were terminated and which application is referenced by either a published application, an application open to public inspection or an issued patent.
9. A record from this system of records may be disclosed, as a routine use, to a Federal, State, or local law enforcement agency, if the USPTO becomes aware of a violation or potential violation of law or regulation.

IN THE UNITED STATES PATENT AND TRADEMARK OFFICE

Applicant : Ulrich Weber et al.
Art Unit : Unknown
Serial No. : 13/009,438
Examiner : Unknown
Filed : January 19, 2011
Conf. No. : 1733
Title : ACTUATORS AND MICROLITHOGRAPHY PROJECTION EXPOSURE SYSTEMS AND METHODS USING THE SAME

Commissioner for Patents
P.O. Box 1450
Alexandria, VA 22313-1450

## CLAIM CORRESPONDENCE TABLE

| U.S. Claim | Corresponding Claim in PCT/EP2009/004892 | Explanation regarding the correspondence |
|---|---|---|
| 1 | 1 | U.S. Claim 1 is the same as PCT claim 1 except that the reference numbers have been removed and the claim edited to promote clarity. |
| 2 | 2 | U.S. Claim 2 is the same as PCT claim 2 except that the reference numbers have been removed and the claim edited to promote clarity. |
| 3 | 3 | U.S. Claim 3 is the same as PCT claim 3 except that the reference numbers have been removed and the claim edited to promote clarity. |
| 4 | 4 | U.S. Claim 4 is the same as PCT claim 4 except that the reference numbers have been removed and the claim edited to promote clarity. |
| 5 | 5 | U.S. Claim 5 is the same as PCT claim 5 except that the reference numbers have been removed and the claim edited to promote clarity. |
| 6 | 6 | U.S. Claim 6 is the same as PCT claim 6 except that the reference numbers have been removed and the claim edited to promote clarity. |
| 7 | 7 | U.S. Claim 7 is the same as PCT claim 7 except that the reference numbers have been removed and the claim edited to promote clarity. |
| 8 | 8 | U.S. Claim 8 is the same as PCT claim 8 except that the reference numbers have been removed and the claim edited to remove multiple claim dependencies and promote clarity. |
| 9 | 9 | U.S. Claim 9 is the same as PCT claim 9 except that the reference numbers have been removed and the claim edited to remove multiple claim dependencies and promote |

| U.S. Claim | Corresponding Claim in PCT/EP2009/004892 | Explanation regarding the correspondence |
|---|---|---|
| | | clarity. |
| 10 | 10 | U.S. Claim 10 is the same as PCT claim 10 except that the reference numbers have been removed and the claim edited to remove multiple claim dependencies and promote clarity. |
| 11 | 11 | U.S. Claim 11 is the same as PCT claim 11 except that the reference numbers have been removed and the claim edited to remove multiple claim dependencies and promote clarity. |
| 12 | 12 | U.S. Claim 12 is the same as PCT claim 12 except that the reference numbers have been removed and the claim edited to remove multiple claim dependencies and promote clarity. |
| 13 | 13 | U.S. Claim 13 is the same as PCT claim 13 except that the reference numbers have been removed and the claim edited to remove multiple claim dependencies and promote clarity. |
| 14 | 14 | U.S. Claim 14 is the same as PCT claim 14 except that the reference numbers have been removed and the claim edited to remove multiple claim dependencies and promote clarity. |
| 15 | 15 | U.S. Claim 15 is the same as PCT claim 15 except that the reference numbers have been removed and the claim edited to remove multiple claim dependencies and promote clarity. |
| 16 | 16 | U.S. Claim 16 is the same as PCT claim 16 except that the reference numbers have been removed and the claim edited to remove multiple claim dependencies and promote clarity. |
| 17 | 17 | U.S. Claim 17 is the same as PCT claim 17 except that the reference numbers have been removed and the claim edited to remove multiple claim dependencies and promote clarity. |
| 18 | 18 | U.S. Claim 18 is the same as PCT claim 18 except that the reference numbers have been removed and the claim edited to remove multiple claim dependencies and promote clarity. |
| 19 | 19 | U.S. Claim 19 is the same as PCT claim 19 except that the reference numbers have been removed and the claim edited to remove multiple claim dependencies and promote clarity. |

| U.S. Claim | Corresponding Claim in PCT/EP2009/004892 | Explanation regarding the correspondence |
|---|---|---|
| 20 | 20 | U.S. Claim 20 is the same as PCT claim 20 except that the reference numbers have been removed and the claim edited to remove multiple claim dependencies and promote clarity. |
| 21 | 21 | U.S. Claim 21 is the same as PCT claim 21 except that the reference numbers have been removed and the claim edited to promote clarity. |
| 22 | 22 | U.S. Claim 22 is the same as PCT claim 22 except that the reference numbers have been removed and the claim edited to promote clarity. |

UNITED STATES PATENT AND TRADEMARK OFFICE

UNITED STATES DEPARTMENT OF COMMERCE
United States Patent and Trademark Office
Address: COMMISSIONER FOR PATENTS
P.O. Box 1450
Alexandria, Virginia 22313-1450
www.uspto.gov

| APPLICATION NO. | FILING DATE | FIRST NAMED INVENTOR | ATTORNEY DOCKET NO. | CONFIRMATION NO. |
|---|---|---|---|---|
| 13/009,438 | 01/19/2011 | Ulrich Weber | 22942-0041001 / ZS 8170PC | 1733 |

26161 7590 06/02/2011
FISH & RICHARDSON P.C. (BO)
P.O. BOX 1022
MINNEAPOLIS, MN 55440-1022

| EXAMINER | |
|---|---|
| GLICK, EDWARD J | |

| ART UNIT | PAPER NUMBER |
|---|---|
| 2882 | |

| NOTIFICATION DATE | DELIVERY MODE |
|---|---|
| 06/02/2011 | ELECTRONIC |

**Please find below and/or attached an Office communication concerning this application or proceeding.**

The time period for reply, if any, is set in the attached communication.

Notice of the Office communication was sent electronically on above-indicated "Notification Date" to the following e-mail address(es):

PATDOCTC@fr.com

UNITED STATES PATENT AND TRADEMARK OFFICE

Commissioner for Patents
United States Patent and Trademark Office
P.O. Box 1450
Alexandria, VA 22313-1450
www.uspto.gov

**FISH & RICHARDSON P.C. (BO)**
**P.O. BOX 1022**
**MINNEAPOLIS MN 55440-1022**

**In re Application of**
**WEBER et al.**
**Application No.: 13/009,438**
**Filed: 19 January 2011**
**Attorney Docket No.: 22942-0041001 / ZS 8170PC**
**For: ACTUATORS AND MICROLITHOGRAPHY PROJECTION EXPOSURE SYSTEMS AND METHODS USING THE SAME**

**: DECISION ON REQUEST TO**
**: PARTICIPATE IN THE PATENT**
**: PROSECUTION HIGHWAY**
**: PROGRAM AND PETITION**
**: TO MAKE SPECIAL UNDER**
**: 37 CFR 1.102(a)**

This is a decision on the request to participate in the PCT Patent Prosecution Highway* (PCT-PPH) pilot program and the petition under 37 CFR 1.102(a), filed 19 January 2011 and renewed 19 May 2011, to make the above-identified application special.

The request and petition are **GRANTED**.

**Discussion**

A grantable request to participate in the PCT-PPH pilot program and petition to make special require:

(1) The U.S. application must have an eligible relationship to one or more PCT applications where the ISA or IPEA are the JPO, EPO, KIPO, or USPTO;

(2) At least one claim in the PCT application has novelty, inventive step, and industrial applicability and must be free of any observations in Box VIII in the latest work product in the international stage or applicant must identify and explain why the claim(s) is/are not subject to the observation in Box VIII;

(3) Applicant must submit a copy of the claim(s) from the PCT application(s) that have novelty, inventive step, and industrial applicability along with an English translation thereof and a statement that the English translation is accurate, if the claims are not in the English language;

(4) All the claims in the U.S. application must sufficiently correspond or be amended to sufficiently correspond to the claim(s) that have novelty, inventive step, and industrial applicability in the PCT application(s);

(5) Examination of the U.S. application has not begun;

(6) Applicant must submit a copy of the latest international work product from the PCT application indicating that the claim(s) have novelty, inventive step, and industrial applicability along with an English translation thereof and a statement that the English translation is accurate if the latest international work product is not in the English language;

(7) Applicant must submit an IDS listing the documents cited by the PCT examiner in the international work product along with copies of documents except U.S. patents or U.S. patent application publications.

The request to participate in the PCT-PPH pilot program and petition comply with the above requirements. Accordingly, the above-identified application has been accorded "special" status.

Telephone inquiries concerning this decision should be directed to Lee W. Young at 571-272-4549.

All other inquiries concerning the examination or status of the application is accessible in the PAIR system at http://www.uspto.gov/ebc.index.html.

This application will be forwarded to the examiner for action on the merits commensurate with this decision once this application's formality reviews have been completed.

Lee W. Young
TQAS Technology Center 2800 - Semiconductors,
Electrical & Optical Systems & Components

UNITED STATES PATENT AND TRADEMARK OFFICE

Commissioner for Patents
United States Patent and Trademark Office
P.O. Box 1450
Alexandria, VA 22313-1450
www.uspto.gov

WOOD, PHILLIPS, KATZ, CLARK & MORTIMER
500 W. MADISON STREET
SUITE 3800
CHICAGO, IL 60661

MAILED

JUN 16 2011

OFFICE OF PETITIONS

In re Application of :
Pavel Novak, et al. :
Application No. 13/009,477 : DECISION GRANTING STATUS
Filed: January 19, 2011 : UNDER 37 CFR 1.47(a)
Attorney Docket No.: SZY10540P00080US :

This is a decision on the petition, filed April 1, 2011, under 37 CFR 1.47(a).

The petition is **GRANTED.**

Petitioner has shown that the legal representative for deceased inventor Helmut Garrelt Neuland could not be located to join in the filing of the above-identified application.

In view of the above, the application and papers have been reviewed and found to be in compliance with 37 CFR 1.47(a). This application is hereby accorded Rule 1.47(a) status.

As provided in 37 CFR 1.47(c), this Office will forward notice of this application's filing to the last known address given in the petition. Notice of the filing of this application will also be published in the Official Gazette.

This application is being referred to the Office of Patent Application Processing for pre-examination processing.

Telephone inquiries regarding this decision should be directed to the undersigned at (571) 272-3204.

/SDB/

Sherry D. Brinkley
Petitions Examiner
Office of Petitions

UNITED STATES PATENT AND TRADEMARK OFFICE

Commissioner for Patents
United States Patent and Trademark Office
P.O. Box 1450
Alexandria, VA 22313-1450
www.uspto.gov

DR. HELMUT GARRELT NEULAND
WESTERBACHSTRASSE 23 F.
61476 KRONBERG IM TAUNUS
GERMANY

MAILED

JUN 16 2011

OFFICE OF PETITIONS

In re Application of :
Pavel Novak and Helbut Garrelt Neuland :
Application No. 13/009,477 : LETTER
Filed: January 19, 2011 :
For MEDICAL SHOCKWAVE APPARATUS :

Dear Dr. Neuland:

You are named as a joint inventor in the above-identified United States patent application filed under the provisions of 35 U.S.C. 116 (United States Code) and 37 CFR 1.47(a), Rules of Practice in Patent Cases. Should a patent be granted on the application you will be designated therein as a joint inventor.

As a named inventor you are entitled to inspect any paper in the file wrapper of the application, order copies of all or any part thereof (at a prepaid cost per 37 CFR 1.19) or make your position of record in the application. Alternatively, you may arrange to do any of the preceding through a registered patent attorney or agent presenting written authorization from you. If you care to join the application, counsel of record (see below) would presumably assist you. Joining in the application would entail the filing of an appropriate oath or declaration by you pursuant to 37 CFR 1.63.

Telephone inquiries regarding this communication should be directed to the undersigned at (571) 272-3204. Requests for information regarding your application should be directed to the File Information Unit at (703) 308-2733. Information regarding how to pay for and order a copy of the application, or a specific paper in the application should be directed to the Certification Division at (703) 308-9726 or 1-800-972-6382 (outside the Washington D.C. area).

/SDB/

Sherry D. Brinkley
Petitions Examiner
Office of Petitions

cc: WOOD, PHILLIPS, KATZ, CLARK & MORTIMER
500 W. MADISON STREET
SUITE 3800
CHICAGO, IL 60661

UNITED STATES PATENT AND TRADEMARK OFFICE

Commissioner for Patents
United States Patent and Trademark Office
P. O. Box 1450
Alexandria, VA 22313-1450
www.uspto.gov

GLOBAL INTELLECTUAL PROPERTY AGENCY, LLC
P.O. BOX 382
SWEDESBORO, NJ 08085

MAILED
NOV 15 2011
OFFICE OF PETITIONS

In re Application of
Melinda Inge
Application No. 13/009,550
Filed: January 19, 2011
Attorney Docket No. MI911201

ON PETITION

This is a decision on the petition under 37 CFR 1.137(b), filed October 24, 2011, to revive the above-identified application.

The petition is **GRANTED.**

The above-identified application became abandoned for failure to reply in a timely manner to the Notice To File Corrected Application Papers (Notice) mailed February 3, 2011. The Notice set a period for reply of two (2) months from the mail date of the Notice. No extension of time under the provisions of 37 CFR 1.136(a) was obtained. Accordingly, the above-identified application became abandoned on April 4, 2011.

Telephone inquiries concerning this decision should be directed to Irvin Dingle at (571) 272-3210.

This matter is being referred to the Office of Patent Application Processing.

Irvin Dingle
Petitions Examiner
Office of Petitions

UNITED STATES PATENT AND TRADEMARK OFFICE

Commissioner for Patents
United States Patent and Trademark Office
P.O. Box 1450
Alexandria, VA 22313-1450
www.uspto.gov

**KLARQUIST SPARKMAN, LLP (OTT-NIH)**
**121 S.W. SALMON STREET**
**SUITE #1600**
**PORTLAND OR 97204-2988**

MAILED
JUN 24 2011
OFFICE OF PETITIONS

In re Application of :
Kwak et al. :
Application No. 13/009,572 : ON PETITION
Filed: January 19, 2011 :
Attorney Docket No. 4239-83274-04 :

This is a decision on the petition under 37 C.F.R. § 1.182, filed May 19, 2011, to change the name of an inventor.

The petition is **GRANTED**.

The name will be changed from "Arya Biragyn" to -- Bira Arya --.

Telephone inquiries regarding this decision should be directed to the undersigned at (571) 272-7751. All other inquiries should be directed to the Technology Center.

/Joan Olszewski/
Joan Olszewski
Petitions Examiner
Office of Petitions

Enclosure: Corrected Filing Receipt

UNITED STATES PATENT AND TRADEMARK OFFICE

UNITED STATES DEPARTMENT OF COMMERCE
United States Patent and Trademark Office
Address: COMMISSIONER FOR PATENTS
P.O. Box 1450
Alexandria, Virginia 22313-1450
www.uspto.gov

| APPLICATION NUMBER | FILING or 371(c) DATE | GRP ART UNIT | FIL FEE REC'D | ATTY.DOCKET.NO | TOT CLAIMS | IND CLAIMS |
|---|---|---|---|---|---|---|
| 13/009,572 | 01/19/2011 | 1648 | 1142 | 4239-83274-04 | 21 | 1 |

**CONFIRMATION NO. 1969**

**CORRECTED FILING RECEIPT**

36218
KLARQUIST SPARKMAN, LLP (OTT-NIH)
121 S.W. SALMON STREET
SUITE #1600
PORTLAND, OR 97204-2988

Date Mailed: 06/23/2011

Receipt is acknowledged of this non-provisional patent application. The application will be taken up for examination in due course. Applicant will be notified as to the results of the examination. Any correspondence concerning the application must include the following identification information: the U.S. APPLICATION NUMBER, FILING DATE, NAME OF APPLICANT, and TITLE OF INVENTION. Fees transmitted by check or draft are subject to collection. Please verify the accuracy of the data presented on this receipt. **If an error is noted on this Filing Receipt, please submit a written request for a Filing Receipt Correction. Please provide a copy of this Filing Receipt with the changes noted thereon. If you received a "Notice to File Missing Parts" for this application, please submit any corrections to this Filing Receipt with your reply to the Notice. When the USPTO processes the reply to the Notice, the USPTO will generate another Filing Receipt incorporating the requested corrections**

**Applicant(s)**

Larry W. Kwak, Frederick, MD;
Bira Arya, Frederick, MD;

**Assignment For Published Patent Application**

The United States of America as represented by the Secretary, Department of Health and Human Service

**Power of Attorney:** The patent practitioners associated with Customer Number 36218

**Domestic Priority data as claimed by applicant**

This application is a CON of 10/380,927 03/17/2003 PAT 7,897,152
which is a 371 of PCT/US01/29075 09/17/2001
which claims benefit of 60/233,067 09/15/2000

**Foreign Applications** (You may be eligible to benefit from the **Patent Prosecution Highway** program at the USPTO. Please see http://www.uspto.gov for more information.)

**If Required, Foreign Filing License Granted:** 01/28/2011

The country code and number of your priority application, to be used for filing abroad under the Paris Convention, is **US 13/009,572**

**Projected Publication Date:** Not Applicable

**Non-Publication Request:** No

**Early Publication Request:** No

**Title**

VIRAL CHEMOKINE-ANTIGEN FUSION PROTEINS

**Preliminary Class**

424

## PROTECTING YOUR INVENTION OUTSIDE THE UNITED STATES

Since the rights granted by a U.S. patent extend only throughout the territory of the United States and have no effect in a foreign country, an inventor who wishes patent protection in another country must apply for a patent in a specific country or in regional patent offices. Applicants may wish to consider the filing of an international application under the Patent Cooperation Treaty (PCT). An international (PCT) application generally has the same effect as a regular national patent application in each PCT-member country. The PCT process **simplifies** the filing of patent applications on the same invention in member countries, but **does not result** in a grant of "an international patent" and does not eliminate the need of applicants to file additional documents and fees in countries where patent protection is desired.

Almost every country has its own patent law, and a person desiring a patent in a particular country must make an application for patent in that country in accordance with its particular laws. Since the laws of many countries differ in various respects from the patent law of the United States, applicants are advised to seek guidance from specific foreign countries to ensure that patent rights are not lost prematurely.

Applicants also are advised that in the case of inventions made in the United States, the Director of the USPTO must issue a license before applicants can apply for a patent in a foreign country. The filing of a U.S. patent application serves as a request for a foreign filing license. The application's filing receipt contains further information and guidance as to the status of applicant's license for foreign filing.

Applicants may wish to consult the USPTO booklet, "General Information Concerning Patents" (specifically, the section entitled "Treaties and Foreign Patents") for more information on timeframes and deadlines for filing foreign patent applications. The guide is available either by contacting the USPTO Contact Center at 800-786-9199, or it can be viewed on the USPTO website at http://www.uspto.gov/web/offices/pac/doc/general/index.html.

For information on preventing theft of your intellectual property (patents, trademarks and copyrights), you may wish to consult the U.S. Government website, http://www.stopfakes.gov. Part of a Department of Commerce initiative, this website includes self-help "toolkits" giving innovators guidance on how to protect intellectual property in specific countries such as China, Korea and Mexico. For questions regarding patent enforcement issues, applicants may call the U.S. Government hotline at 1-866-999-HALT (1-866-999-4158).

## LICENSE FOR FOREIGN FILING UNDER

## Title 35, United States Code, Section 184

## Title 37, Code of Federal Regulations, 5.11 & 5.15

**GRANTED**

The applicant has been granted a license under 35 U.S.C. 184, if the phrase "IF REQUIRED, FOREIGN FILING LICENSE GRANTED" followed by a date appears on this form. Such licenses are issued in all applications where the conditions for issuance of a license have been met, regardless of whether or not a license may be required as

set forth in 37 CFR 5.15. The scope and limitations of this license are set forth in 37 CFR 5.15(a) unless an earlier license has been issued under 37 CFR 5.15(b). The license is subject to revocation upon written notification. The date indicated is the effective date of the license, unless an earlier license of similar scope has been granted under 37 CFR 5.13 or 5.14.

This license is to be retained by the licensee and may be used at any time on or after the effective date thereof unless it is revoked. This license is automatically transferred to any related applications(s) filed under 37 CFR 1.53(d). This license is not retroactive.

The grant of a license does not in any way lessen the responsibility of a licensee for the security of the subject matter as imposed by any Government contract or the provisions of existing laws relating to espionage and the national security or the export of technical data. Licensees should apprise themselves of current regulations especially with respect to certain countries, of other agencies, particularly the Office of Defense Trade Controls, Department of State (with respect to Arms, Munitions and Implements of War (22 CFR 121-128)); the Bureau of Industry and Security, Department of Commerce (15 CFR parts 730-774); the Office of Foreign AssetsControl, Department of Treasury (31 CFR Parts 500+) and the Department of Energy.

**NOT GRANTED**

No license under 35 U.S.C. 184 has been granted at this time, if the phrase "IF REQUIRED, FOREIGN FILING LICENSE GRANTED" DOES NOT appear on this form. Applicant may still petition for a license under 37 CFR 5.12, if a license is desired before the expiration of 6 months from the filing date of the application. If 6 months has lapsed from the filing date of this application and the licensee has not received any indication of a secrecy order under 35 U.S.C. 181, the licensee may foreign file the application pursuant to 37 CFR 5.15(b).

UNITED STATES PATENT AND TRADEMARK OFFICE

Commissioner for Patents
United States Patent and Trademark Office
P.O. Box 1450
Alexandria, VA 22313-1450
www.uspto.gov

In re Application of
Marshall Medoff

Application No. 13009607

Filed:

Attorney Docket No. 08895-0085005

:DECISION ON PETITION TO MAKE SPECIAL
:UNDER 37 CFR 1.102(c)(1)

This is a decision on the electronic petition under 37 CFR 1.102 (c)(1), filed 19-JAN-2011 to make the above-identified application special based on applicant's age as set forth in MPEP § 708.02, Section IV.

The petition is **GRANTED**.

A grantable petition to make an application special under 37 CFR 1.102(c)(1), MPEP § 708.02, Section IV: Applicant's Age must include a statement by applicant or a registered practitioner having evidence that applicant is at least 65 years of age. No fee is required.

Accordingly, the above-identified application has been accorded "special" status and will be taken up for action by the examiner upon the completion of all pre-examination processing.

Telephone inquiries concerning this electronic decision should be directed to the Electronic Business Center at 866-217-9197.

All other inquiries concerning either the examination or status of the application should be directed to the Technology Center.

UNITED STATES PATENT AND TRADEMARK OFFICE

Commissioner for Patents
United States Patent and Trademark Office
P.O. Box 1450
Alexandria, VA 22313-1450
www.uspto.gov

MAILED

FEB 27 2012

OFFICE OF PETITIONS

KNOBBE MARTENS
OLSON & BEAR LLP
2040 MAIN STREET, 14TH FL
IRVINE CA 92614

**In re Application of**
**Koichiro Takeguchi et al**
**Application No.: 13/009,640**
**Filed: January 19, 2011**
**Attorney Docket No.: SUTOSH.759AUS**
**For: ELECTRONIC APPARATUS**

**: DECISION ON REQUEST TO**
**: PARTICIPATE IN THE PATENT**
**: PROSECUTION HIGHWAY**
**: PROGRAM AND PETITION**
**: TO MAKE SPECIAL UNDER**
**: 37 CFR 1.102(a)**

This is a decision on the request to participate in the Patent Prosecution Highway (PPH) program and the petition under 37 CFR 1.102(a), filed December 1, 2011, to make the above-identified application special.

The request and petition are **GRANTED**.

## Discussion

A grantable request to participate in the PPH pilot program and petition to make special require:

1. The U.S. application is

    a. a Paris Convention application which either
        i. validly claims priority under 35 U.S.C. 119(a) and 37 CFR 1.55 to one or more applications filed in the JPO, or
        ii. validly claims priority to a PCT application that contains no priority claims, or
    b. a national stage application under the PCT (an application which entered the national stage in the U.S. from a PCT international application after compliance with 35 U.S.C. 371), which PCT application
        i. validly claims priority to an application filed in the JPO, or
        ii. validly claims priority to a PCT application that contains no priority claims, or
        iii. contains no priority claim, or
    c. a so-called bypass application filed under 35 U.S.C. 111(a) which validly claims benefit under 35 U.S.C. 120 to a PCT application, which PCT application
        i. validly claims priority to an application filed in the JPO, or
        ii. validly claims priority to a PCT application that contains no priority claims, or
        iii. contains no priority claim;

2. Applicant must submit a copy of:
    a. The allowable/patentable claim(s) from the JPO application(s);
    b. An English translation of the allowable/patentable claim(s) and
    c. A statement that the English translation is accurate;
3. Applicant must:
    a. Ensure all the claims in the U.S. application must sufficiently correspond or be amended to sufficiently correspond to the allowable/patentable claim(s) in the JPO application(s) and
    b. Submit a claims correspondence table in English;
4. Examination of the U.S. application has not begun;
5. Applicant must submit:
    a. Documentation of prior office action:
        i. a copy of the office action(s) just prior to the "Decision to Grant a Patent" from each of the JPO application(s) containing the allowable/patentable claim(s) or
        ii. if the allowable/patentable claims(s) are from a "Notification of Reasons for Refusal" then the Notification of Reasons for Refusal or
        iii. if the JPO application is a first action allowance then no office action from the JPO is necessary should be indicated on the request/petition form;
    b. An English language translation of the JPO Office action from (5)(a)(i)-(ii) above
    c. A statement that the English translation is accurate;
6. Applicant must submit:
    a. An IDS listing the documents cited by the JPO examiner in the JPO office action (unless already submitted in this application)
    b. Copies of the documents except U.S. patents or U.S. patent application publications (unless already submitted in this application);

The request to participate in the PPH pilot program and petition comply with the above requirements. Accordingly, the above-identified application has been accorded "special" status.

Inquiries concerning this decision should be directed to Irvin Dingle at (571) 272-3210.

All other inquiries concerning the examination or status of the application is accessible in the PAIR system at http://www.uspto.gov/ebc.index.html.

This application will be forwarded to the examiner for action on the merits commensurate with this decision once this application's formality reviews have been completed.

David Bucci
Petitions Examiner
Office of Petitions

UNITED STATES PATENT AND TRADEMARK OFFICE

UNITED STATES DEPARTMENT OF COMMERCE
United States Patent and Trademark Office
Address: COMMISSIONER FOR PATENTS
P.O. Box 1450
Alexandria, Virginia 22313-1450
www.uspto.gov

| APPLICATION NO. | FILING DATE | FIRST NAMED INVENTOR | ATTORNEY DOCKET NO. | CONFIRMATION NO. |
|---|---|---|---|---|
| 13/009,671 | 01/19/2011 | Nobuyuki MYOUGA | TOSH/0189US | 1132 |

26290 7590 09/13/2011
PATTERSON & SHERIDAN, L.L.P.
3040 POST OAK BOULEVARD
SUITE 1500
HOUSTON, TX 77056

| EXAMINER | |
|---|---|
| FAN, CHIEH M | |
| ART UNIT | PAPER NUMBER |
| 2611 | |
| MAIL DATE | DELIVERY MODE |
| 09/13/2011 | PAPER |

**Please find below and/or attached an Office communication concerning this application or proceeding.**

The time period for reply, if any, is set in the attached communication.

UNITED STATES PATENT AND TRADEMARK OFFICE

Commissioner for Patents
United States Patent and Trademark Office
P.O. Box 1450
Alexandria, VA 22313-1450
www.uspto.gov

**PATTERSON & SHERIDAN, L.L.P.**
**3040 POST OAK BOULEVARD**
**SUITE 1500**
**HOUSTON TX 77056**

**In re Application of**
**Nobuyuki MYOUGA**
**Application No.: 13/009,671**
**Filed: 19 January 2011**
**Attorney Docket No.: 01272.164652**
**For: DATA SYNCHRONIZER FOR SYNCHRONIZING DATA AND COMMUNICATION INTERFACE INCLUDING THE SAME**

**: DECISION ON REQUEST TO**
**: PARTICIPATE IN THE PATENT**
**: PROSECUTION HIGHWAY**
**: PROGRAM AND PETITION**
**: TO MAKE SPECIAL UNDER**
**: 37 CFR 1.102(a)**

This is a decision on the request to participate in the Patent Prosecution Highway (PPH) program and the petition under 37 CFR 1.102(a), filed 02 September 2011, to make the above-identified application special.

The request and petition are **GRANTED**.

## Discussion

A grantable request to participate in the PPH pilot program and petition to make special require:

1. The U.S. application is

    a. a Paris Convention application which either
        i. validly claims priority under 35 U.S.C. 119(a) and 37 CFR 1.55 to one or more applications filed in the JPO, or
        ii. validly claims priority to a PCT application that contains no priority claims, or
    b. a national stage application under the PCT (an application which entered the national stage in the U.S. from a PCT international application after compliance with 35 U.S.C. 371), which PCT application
        i. validly claims priority to an application filed in the JPO, or
        ii. validly claims priority to a PCT application that contains no priority claims, or
        iii. contains no priority claim, or
    c. a so-called bypass application filed under 35 U.S.C. 111(a) which validly claims benefit under 35 U.S.C. 120 to a PCT application, which PCT application
        i. validly claims priority to an application filed in the JPO, or

ii. validly claims priority to a PCT application that contains no priority claims, or
iii. contains no priority claim;

2. Applicant must submit a copy of:
   a. The allowable/patentable claim(s) from the JPO application(s);
   b. An English translation of the allowable/patentable claim(s) and
   c. A statement that the English translation is accurate;
3. Applicant must:
   a. Ensure all the claims in the U.S. application must sufficiently correspond or be amended to sufficiently correspond to the allowable/patentable claim(s) in the JPO application(s) and
   b. Submit a claims correspondence table in English;
4. Examination of the U.S. application has not begun;
5. Applicant must submit:
   a. Documentation of prior office action:
      i. a copy of the office action(s) just prior to the "Decision to Grant a Patent" from each of the JPO application(s) containing the allowable/patentable claim(s) or
      ii. if the allowable/patentable claims(s) are from a "Notification of Reasons for Refusal" then the Notification of Reasons for Refusal or
      iii. if the JPO application is a first action allowance then no office action from the JPO is necessary should be indicated on the request/petition form;
   b. An English language translation of the JPO Office action from (5)(a)(i)-(ii) above
   c. A statement that the English translation is accurate;
6. Applicant must submit:
   a. An IDS listing the documents cited by the JPO examiner in the JPO office action (unless already submitted in this application)
   b. Copies of the documents except U.S. patents or U.S. patent application publications (unless already submitted in this application);

The request to participate in the PPH pilot program and petition comply with the above requirements. Accordingly, the above-identified application has been accorded "special" status.

Inquiries concerning this decision should be directed to Lee W. Young at 571-272-4549.

All other inquiries concerning the examination or status of the application is accessible in the PAIR system at http://www.uspto.gov/ebc.index.html.

This application will be forwarded to the examiner for action on the merits commensurate with this decision once this application's formality reviews have been completed.

Lee W. Young
TQAS, Technology Center 2600

UNITED STATES PATENT AND TRADEMARK OFFICE

UNITED STATES DEPARTMENT OF COMMERCE
United States Patent and Trademark Office
Address: COMMISSIONER FOR PATENTS
P.O. Box 1450
Alexandria, Virginia 22313-1450
www.uspto.gov

| APPLICATION NO. | FILING DATE | FIRST NAMED INVENTOR | ATTORNEY DOCKET NO. | CONFIRMATION NO. |
|---|---|---|---|---|
| 13/009,689 | 01/19/2011 | Tatsuya MIYAIRI | NGTOSH.158AUS | 1169 |

7590 09/02/2011

KNOBBE MARTENS OLSON & BEAR LLP
2040 MAIN STREET
FOURTEENTH FLOOR
IRVINE, CA 92614

| EXAMINER | |
|---|---|
| THOMPSON, TIMOTHY J | |
| **ART UNIT** | **PAPER NUMBER** |
| 2835 | |
| **NOTIFICATION DATE** | **DELIVERY MODE** |
| 09/02/2011 | ELECTRONIC |

# DECISION GRANTING PETITION UNDER 37 CFR 1.138(d)

*The declaration of express abandonment is recognized*

This is in response to the petition under 37 CFR 1.138(d), requesting for a refund of any previously paid search fee and excess claims fee in the above-identified application.

The petition is granted.

The express abandonment is recognized. Any previously paid search fee and excess claims fee are hereby refunded.

Telephone inquiries should be directed to the Office of Data Management at (571) 272-4200.

Mimi Farmer

Patent Publication Branch
Office of Data Management

UNITED STATES PATENT AND TRADEMARK OFFICE

Commissioner for Patents
United States Patent and Trademark Office
P.O. Box 1450
Alexandria, VA 22313-1450
www.uspto.gov

FOLEY & LARDNER LLP
777 EAST WISCONSIN AVENUE
MILWAUKEE WI 53202-5306

**MAILED**

OCT 12 2011

**OFFICE OF PETITIONS**

ON PETITION

In re Application of
Hamburg, et al.
Application No. 13/009,721
Filed: January 19, 2011
Attorney Docket No. 096544-0908
For: UNIVERSAL MOUNTING STRUCTURE FOR A LAWN STRIPER

This is a decision on the petition under 37 CFR 1.137(b), filed September 23, 2011, to revive the above-identified application.

The petition under 37 CFR 1.137(b) is **GRANTED**.

This application became abandoned for failure to completely reply to the Notice to File Missing Parts of Nonprovisonal Application, mailed February 2, 2011, which set a two month shortened statutory period for reply. Applicants obtained a five month extensions of time pursuant to 37 CFR 1.136(a) and filed the $330.00 basic filing fee, the $130.00 surcharge, the $540.00 search fee, the $220.00 examination fee, and a partially executed declaration. Applicants filed a completely executed declaration on September 8, 2011. However, this application became abandoned on September 3, 2011. A Notice of Abandonment was mailed on September 14, 2011.

Applicants have submitted a proper reply to the February 2, 2011 Notice in the form of the basic filing fee, search fee, examination fee, surcharge, and a completely executed declaration, an acceptable statement of the unintentional nature of the delay in responding to the February 2, 2011 Notice, and the $1,620.00 petition fee. Accordingly, the petition under 37 CFR 1.137(b) is granted.

After the mailing of this decision, the file will be returned to the Office of Patent Application Processing for further pre-examination processing.

Telephone inquiries concerning this matter may be directed to the undersigned at (571) 272-3230.

Shirene Willis Brantley

Shirene Willis Brantley
Senior Petitions Attorney
Office of Petitions

UNITED STATES PATENT AND TRADEMARK OFFICE

UNITED STATES DEPARTMENT OF COMMERCE
United States Patent and Trademark Office
Address: COMMISSIONER FOR PATENTS
P.O. Box 1450
Alexandria, Virginia 22313-1450
www.uspto.gov

| APPLICATION NO. | FILING DATE | FIRST NAMED INVENTOR | ATTORNEY DOCKET NO. | CONFIRMATION NO. |
|---|---|---|---|---|
| 13/009,759 | 01/19/2011 | Thomas L. CANTOR | 532212000611 | 1361 |

25225 7590 03/06/2012

MORRISON & FOERSTER LLP
12531 HIGH BLUFF DRIVE
SUITE 100
SAN DIEGO, CA 92130-2040

| EXAMINER | |
|---|---|
| CHEU, CHANGHWA J | |
| ART UNIT | PAPER NUMBER |
| 1641 | |

| NOTIFICATION DATE | DELIVERY MODE |
|---|---|
| 03/06/2012 | ELECTRONIC |

**Please find below and/or attached an Office communication concerning this application or proceeding.**

The time period for reply, if any, is set in the attached communication.

Notice of the Office communication was sent electronically on above-indicated "Notification Date" to the following e-mail address(es):

EOfficeSD@mofo.com
PatentDocket@mofo.com
Drcaldwell@mofo.com

UNITED STATES PATENT AND TRADEMARK OFFICE

Commissioner for Patents
United States Patent and Trademark Office
P.O. Box 1450
Alexandria, VA 22313-1450
www.uspto.gov

MAR 0 6 2012

MORRISON & FOERSTER LLP
12531 HIGH BLUFF DRIVE
SUITE 100
SAN DIEGO CA 92130-2040

In re Application of:
Cantor et al.
Serial No.: 13/009,759
Filed: January 19, 2011
Attorney Docket No.: **532212000611**

: PETITION DECISION

This is in response to the petition under 37 CFR § 1.59(b), filed February 13, 2012, to expunge information from the above identified application. This application has not been allowed.

Petitioner requests that the information submitted with Information Disclosure Statement which was submitted on February 13, 2012 be expunged from the record because it is subject to a Protective Order and/or Proprietary information. Petitioner states either: (A) that the information contains trade secret material, proprietary material and/or material that is subject to a protective order which has not been made public; or (B) that the information submitted was unintentionally submitted and the failure to obtain its return would cause irreparable harm to the party who submitted the information or to the party in interest on whose behalf the information was submitted, and the information has not otherwise been made public. The petition fee set forth in 37 CFR § 1.17(g) has been paid.

This is an examined application which is currently under non-final rejection. As such the information provided has been reviewed, in part, but proceedings in the application have not been terminated. As stated in M.P.E.P. 724, upon allowance or other action closing prosecution in an application, petition may be made for return of Proprietary information. The information cannot be expunged at this time.

The petition is **DISMISSED**. Petitioner may resubmit the petition subsequent to a Notice of Allowability or *ex parte Quayle* action being mailed in the application. No additional petition fee will be required at that time.

Should there be any questions about this decision please contact Marianne C. Seidel by letter addressed to Director, TC 1600, at the address listed above, or by telephone at 571-272-0584 or by facsimile sent to the general Office facsimile number, 571-273-8300.

/MC Seidel/
Marianne C. Seidel, Quality Assurance Specialist
Technology Center 1600

UNITED STATES PATENT AND TRADEMARK OFFICE

Commissioner for Patents
United States Patent and Trademark Office
P.O. Box 1450
Alexandria, VA 22313-1450
www.uspto.gov

WILSON, SONSINI, GOODRICH & ROSATI
650 PAGE MILL ROAD
PALO ALTO CA 94304-1050

MAILED
OCT 12 2011
OFFICE OF PETITIONS

In re Application of :
Brent S. Gaylord et al. :
Application No. 13/009,764 : ON PETITION
Filed: January 19, 2011 :
Attorney Docket No. 32942-709.201 :

This is a decision on the petition, filed June 20, 2011, requesting that the requirement of 37 CFR 1.84 be waived pursuant to 37 CFR 1.183.

The petition is **DISMISSED**.

The rules and statutory provisions governing the operations of the U.S. Patent and Trademark Office require payment of a fee on filing each petition. In this instance, the petition under 37 CFR 1.183 requires a fee under 37 CFR 1.17(f) that is currently $400. The petition in the above-identified application was not accompanied by payment of the required fee. No consideration on the merits can be given that petition until the required fee is received.

Any request for reconsideration of this decision must include a cover letter entitled "Renewed Petition under 37 CFR 1.183". This is **not** a final agency action within the meaning of 5 U.S.C. § 704. In submitting a renewed petition, in addition to remedying the fee deficiency, petitioner should also identify the specific requirement of 37 CFR 1.84 that is to be waived pursuant to 37 CFR 1.183.

If appropriate, instead of filing a renewed petition under 37 CFR 1.183, petitioner may wish to consider filing a petition under the provisions of 37 CFR 1.84 (a)(2).

Telephone inquiries regarding this communication should be directed to the undersigned at (571) 272-4914.

Ramesh Krishnamurthy
Petitions Examiner
Office of Petitions

**Doc Code: PET.GREEN**
**Document Description: Petition for Green Tech Pilot**

PTO/SB/420 (11-10)
Approved for use through 01/31/2011. OMB 0651-0062
U.S. Patent and Trademark Office; U. S. DEPARTMENT OF COMMERCE
Under the Paperwork Reduction Act of 1995, no persons are required to respond to a collection of information unless it displays a valid OMB control number.

# PETITION TO MAKE SPECIAL UNDER THE GREEN TECHNOLOGY PILOT PROGRAM

| Attorney Docket Number: 12956-105-999 | Application Number (if known): Not Yet Assigned | Filing date: Herewith |
|---|---|---|
| First Named Inventor: Mark J. Burk | | |
| Title: Microorganisms for the Production of 1,4-Butanediol | | |

**APPLICANT HEREBY REQUESTS TO PARTICIPATE IN THE GREEN TECHNOLOGY PILOT PROGRAM FOR THE ABOVE-IDENTIFIED APPLICATION. See Instruction Sheet on page 2.**

This petition must be timely filed electronically using the USPTO electronic filing system, EFS-Web.

1. By filing this petition:

   **Applicant is requesting early publication: Applicant hereby requests early publication under 37 CFR 1.219 and the publication fee set forth in 37 CFR 1.18(d) accompanies this request.**

2. By filing this petition: applicant is agreeing to make an election without traverse in a telephonic interview and elect an invention that meets the eligibility requirements for the Green Technology Pilot Program, if the Office determines that the claims are not obviously directed to a single invention. See Instruction Sheet.

3. This request is accompanied by statements of special status for the eligibility requirement.

4. The application contains no more than three (3) independent claims and twenty (20) total claims.

5. The application does not contain any multiple dependent claims.

6. Other attachments: Preliminary amendment

| Signature /Victor Behar/ | Date 1/19/2011 |
|---|---|
| Name (Print/Typed) Victor Behar | Registration Number 60,691 |

***Note:*** *Signatures of all the inventors or assignees of record of the entire interest or their representative(s) are required in accordance with 37 CFR 1.33 and 11.18. Please see 37 CFR 1.4(d) for the form of the signature. If necessary, submit multiple forms for more than one signature, see below*.*

☒ *Total of 1 forms are submitted.

The information is required to obtain or retain a benefit by the public which is to file (and by the USPTO to process) an application. Confidentiality is governed by 35 U.S.C. 122 and 37 CFR 1.11 and 1.14. This collection is estimated to take 12 hours to complete, including gathering, preparing, and submitting the completed application form to the USPTO. Time will vary depending upon the individual case. Any comments on the amount of time you require to complete this form and/or suggestions for reducing this burden, should be sent to the Chief Information Officer, U.S. Patent and Trademark Office, U.S. Department of Commerce, P.O. Box 1450, Alexandria, VA 22313-1450. DO NOT SEND FEES OR COMPLETED FORMS TO THIS ADDRESS. **SEND TO: Commissioner for Patents, P.O. Box 1450, Alexandria, VA 22313-1450.**

*If you need assistance in completing the form, call 1-800-PTO-9199 and select option 2.*

**PATENT**

**IN THE UNITED STATES PATENT AND TRADEMARK OFFICE**

| | | | |
|---|---|---|---|
| Application of: | Burk, *et al.* | Confirmation No.: | Not Yet Assigned |
| Serial No.: | Not Yet Assigned | Art Unit: | Not yet assigned |
| Filed: | Herewith | Examiner: | Not yet assigned |
| For: | MICROORGANISMS FOR THE PRODUCTION OF 1,4-BUTANEDIOL | Attorney Docket No.: (CAM) | 12956-105-999 (871943-999105) |

**STATEMENT OF SPECIAL STATUS FOR PETITION TO MAKE SPECIAL UNDER GREEN TECHNOLOGY PILOT PROGRAM**

Commissioner for Patents
P.O. Box 1450
Alexandria, VA 22313-1450

Sir:

Pursuant to the Notice of the Pilot Program for Green Technologies set forth in the Federal Register, Vol. 74, No. 234, pages 64666-64669 (December 8, 2009) and extended pursuant to the Expansion and Extension of the Green Technology Pilot Program set forth in the Federal Register, Vol.75, No 217, pages 69049-69050 (November 10, 2010), Applicants submit herewith a Petition to Make Special that satisfies the requirements set forth in the Notice. Pursuant to the requirements of the Green Technology Pilot Program, Applicants hereby state that the invention relates to bioproduction of chemicals with reduced need for petroleum-based products, enhanced energy conservation, and reduced greenhouse gas emissions. In particular, the claimed invention relates to microbial organisms and methods of use of such organisms for the production of 1,4-butanediol. Applicants submit that the claims appear to substantially fall under the Classification Requirements set forth in section VI of the Notice as (A) alternative energy production, (10) genetically engineered organism.

As required in the Notice, please charge the publication fee under 37 CFR 1.18(d) of $300.00 to Deposit Account No. 503013 (Ref: 871943-999105). Please charge any shortage in fees due in connection with the filing of this paper, including extension of time fees, to Deposit Account 503013 (Ref: 871943-999105)and please credit any excess fees to such deposit account.

Respectfully submitted,

Date: January 19, 2011

/ Victor Behar/

*By:* Victor Behar **Reg. No. 60,691**
**JONES DAY**
12265 El Camino Real, Suite 200
San Diego, California 92130
(858) 314-1200

*For*: David A. Gay **Reg. No. 39,200**
**JONES DAY**
12265 El Camino Real, Suite 200
San Diego, California 92130
(858) 314-1200

UNITED STATES PATENT AND TRADEMARK OFFICE

UNITED STATES DEPARTMENT OF COMMERCE
United States Patent and Trademark Office
Address: COMMISSIONER FOR PATENTS
P.O. Box 1450
Alexandria, Virginia 22313-1450
www.uspto.gov

| APPLICATION NO. | FILING DATE | FIRST NAMED INVENTOR | ATTORNEY DOCKET NO. | CONFIRMATION NO. |
|---|---|---|---|---|
| 13/009,813 | 01/19/2011 | Mark J. BURK | 12956-105-999 | 1475 |

20583 7590 08/26/2011

JONES DAY
222 EAST 41ST ST
NEW YORK, NY 10017

| EXAMINER | |
|---|---|
| KAM, CHIH MIN | |
| **ART UNIT** | **PAPER NUMBER** |
| 1656 | |
| **MAIL DATE** | **DELIVERY MODE** |
| 08/26/2011 | PAPER |

**Please find below and/or attached an Office communication concerning this application or proceeding.**

The time period for reply, if any, is set in the attached communication.

UNITED STATES PATENT AND TRADEMARK OFFICE

Commissioner for Patents
United States Patent and Trademark Office
P.O. Box 1450
Alexandria, VA 22313-1450
www.uspto.gov

AUG 2 6 2011

JONES DAY
222 EAST 41ST ST
NEW YORK NY 10017

In re Application of :

| | | |
|---|---|---|
| BURK, MARK *et al.* | : | DECISION ON PETITION |
| Application No. 13/009813 | : | TO MAKE SPECIAL UNDER |
| Filed: January 19, 2011 | : | THE GREEN TECHNOLOGY |
| Attorney Docket No. 12956-105-999 | : | PILOT PROGRAM |

This is a decision on the petition under 37 CFR 1.102, filed January 19, 2011, to make the above-identified application special under the pilot program for applications pertaining to Green Technologies as set forth in 74 Federal Register Notice 64666 (December 8, 2009) and amended by 75 Federal Register Notice 28554 (May 21, 2010) and 75 Federal Register Notice 69049 (November 10, 2010).

The petition is **GRANTED**.

A grantable petition to make an application special under 37 CFR 1.102 and the pilot program as set forth in 74 FR 64666 must be directed to a nonprovisional application filed under 35 USC 111(a) or be a national stage entry under 35 USC 371, exclusive of any reissue applications.

In order to qualify for special status, the following requirements must be met. 1) The application must have no more than 3 independent claims and no more than 20 total claims. 2) The application must not contain any multiple dependent claims. 3) The petition must state the basis for seeking special status, i.e., the claimed invention either: A) materially enhances the quality of the environment or B) materially contributes to: i) the discovery or development of renewable energy resources, ii) the more efficient utilization and conservation of energy resources, or iii) greenhouse gas emission reduction. 4) If the disclosure is not clear on its face that the claimed invention materially contributes under category (A) or (B), the petition must be accompanied by a statement by the applicant, assignee, or an attorney/agent registered to practice before the Office explaining how the materiality standard is met. 5) A statement that applicant will agree to make an election without traverse in a telephonic interview if a restriction requirement is made by the examiner. 6) The petition to make special must be filed electronically. 7) The petition must be filed at least one day prior to the date that a first Office Action appears in the Patent Application Information Retrieval (PAIR) system. 8) The petition must be accompanied by a request for early publication in compliance with 37 CFR 1.219 and include the publication fee as set forth in 37 CFR 1.18(d).

The requirement for a fee for consideration of the petition to make special for applications pertaining to Green Technologies has been waived.

The instant petition complies with items 1 – 8 above. Accordingly, the above-identified application has been accorded "special" status.

Telephone inquires concerning this decision should be directed to Manjunath Rao at 571-272-0939.

The application is being forwarded to the Technology Center Art Unit 1656 for action on the merits commensurate with this decision.

/Manjunath Rao/

Manjunath Rao
Supervisory Patent Examiner &
POC for TC 1600 Green Tech Petitions
Technology Center 1600

UNITED STATES PATENT AND TRADEMARK OFFICE

UNITED STATES DEPARTMENT OF COMMERCE
United States Patent and Trademark Office
Address: COMMISSIONER FOR PATENTS
P.O. Box 1450
Alexandria, Virginia 22313-1450
www.uspto.gov

| APPLICATION NO. | FILING DATE | FIRST NAMED INVENTOR | ATTORNEY DOCKET NO. | CONFIRMATION NO. |
|---|---|---|---|---|
| 13/009,837 | 01/19/2011 | Brian J. Zelinski | 1547.150US1 | 1531 |

85851 7590 06/01/2011
Schwegman Lundberg & Woessner / Raytheon
P.O. Box 2938
Minneapolis, MN 55402

| EXAMINER | |
|---|---|
| ART UNIT | PAPER NUMBER |
| 3662 | |

| NOTIFICATION DATE | DELIVERY MODE |
|---|---|
| 06/01/2011 | ELECTRONIC |

**Please find below and/or attached an Office communication concerning this application or proceeding.**

The time period for reply, if any, is set in the attached communication.

Notice of the Office communication was sent electronically on above-indicated "Notification Date" to the following e-mail address(es):

uspto@slwip.com
request@slwip.com

UNITED STATES PATENT AND TRADEMARK OFFICE

Commissioner for Patents
United States Patent and Trademark Office
P.O. Box 1450
Alexandria, VA 22313-1450
www.uspto.gov

MAY 31 2011

In re Application of : DECISION ON PETITION
Brian Zelinski et al. :
SERIAL NO.: 13/009,837 :
FILED: January 19, 2011 :
FOR: SOLID SOLUTION-BASED
NANOCOMPOSITE OPTICAL CERAMIC
MATERIALS

This is a decision on the request filed January 19, 2011 to waive the requirements of 37 CFR 1.84(a) so as to permit the application to include a color drawing. Applicant has shown that the use of color is an essential element in the representation of the drawing.

Petition Granted.

/ Thomas H. Tarcza/

---

Thomas H. Tarcza
SPE, Art Unit 3662
571-272-6979

UNITED STATES PATENT AND TRADEMARK OFFICE

UNITED STATES DEPARTMENT OF COMMERCE
United States Patent and Trademark Office
Address: COMMISSIONER FOR PATENTS
P.O. Box 1450
Alexandria, Virginia 22313-1450
www.uspto.gov

| APPLICATION NO. | FILING DATE | FIRST NAMED INVENTOR | ATTORNEY DOCKET NO. | CONFIRMATION NO. |
|---|---|---|---|---|
| 13/009,844 | 01/19/2011 | Anthony Lochtefeld | AW01-703US | 1546 |

7590 07/22/2011

EXAMINER

AmberWave, Inc.
Andrew Martin
46 Barderry Lane
Nottingham, NH 03290

| ART UNIT | PAPER NUMBER |
|---|---|
| 1725 | |

| NOTIFICATION DATE | DELIVERY MODE |
|---|---|
| 07/22/2011 | ELECTRONIC |

# DECISION DISMISSING PETITION UNDER 37 CFR 1.138(c)

*The declaration of express abandonment will not be recognized*

This is in response to the petition under 37 CFR 1.138(c), for express abandonment to avoid publication of the above-identified application.

The petition is dismissed.

The express abandonment will **not** be recognized for the reason(s) indicated below:

1. ☑ The petition under 37 CFR 1.138(c) was not filed in sufficient time to permit the appropriate officials to recognize the abandonment and remove the application from the publication process.
2. ☐ The petition was not signed by a party authorized by 37 CFR 1.33(b)(1), (3) or (4).
3. ☐ The Application was published in compliance with 35 U.S.C. 122(b), and it is available on the USPTO web site at http://www.uspto.gov/patft/index.html.
4. ☐ Petition fee was not paid.

The application **has/will be published** as scheduled.

Telephone inquiries should be directed to the Office of Data Management at (571) 272-4200.

Nimi Farmer

Patent Publication Branch
Office of Data Management

UNITED STATES PATENT AND TRADEMARK OFFICE

Commissioner for Patents
United States Patent and Trademark Office
P.O. Box 1450
Alexandria, VA 22313-1450
www.uspto.gov
DW Oct-11

GOKALP BAYRAMOGLU
200 W SAHARA AVE UNIT 1601
LAS VEGAS NV 89102

MAILED
OCT 25 2011
OFFICE OF PETITIONS

| | | |
|---|---|---|
| In re Application of | : | |
| Gokalp Bayramoglu | : | |
| Application Number: 13/009,850 | : | ON PETITION |
| Filing Date: 01/20/2011 | : | |
| Attorney Docket No. TPK-A0001-01-USI | : | |

This is a decision in response to the petition under 37 CFR 1.137(b) filed on October 12, 2011, to revive the above-identified application.

The petition is **GRANTED**.

The application became abandoned on April 4, 2011 for failure to timely submit a reply to the Notice to File Corrected Application Papers mailed on February 3, 2011, which set a two (2) month shortened period for reply. No extensions of time under 37 CFR 1.136(a) were obtained. The filing of the present petition precedes the mailing of Notice of Abandonment.

Receipt of the replacement drawings filed on October 12, 2011 in response to the Notice to File Corrected Application Papers is acknowledged.

The application is being referred to the Office of Patent Application Processing for further processing.

Telephone inquiries concerning this matter may be directed to the undersigned at (571) 272-3231.

DWood

Douglas I. Wood
Senior Petitions Attorney
Office of Petitions

UNITED STATES PATENT AND TRADEMARK OFFICE

UNITED STATES DEPARTMENT OF COMMERCE
United States Patent and Trademark Office
Address: COMMISSIONER FOR PATENTS
P.O. Box 1450
Alexandria, Virginia 22313-1450
www.uspto.gov

| APPLICATION NO. | FILING DATE | FIRST NAMED INVENTOR | ATTORNEY DOCKET NO. | CONFIRMATION NO. |
|---|---|---|---|---|
| 13/009,914 | 01/20/2011 | Jeyaraj Vadiveloo | 04624.0196-01 | 1689 |

22852 7590 08/11/2011

FINNEGAN, HENDERSON, FARABOW, GARRETT & DUNNER LLP
901 NEW YORK AVENUE, NW
WASHINGTON, DC 20001-4413

| EXAMINER | |
|---|---|
| KRAMER, JAMES A | |

| ART UNIT | PAPER NUMBER |
|---|---|
| 3693 | |

| MAIL DATE | DELIVERY MODE |
|---|---|
| 08/11/2011 | PAPER |

**Please find below and/or attached an Office communication concerning this application or proceeding.**

The time period for reply, if any, is set in the attached communication.

UNITED STATES PATENT AND TRADEMARK OFFICE

Commissioner for Patents
United States Patent and Trademark Office
P.O. Box 1450
Alexandria, VA 22313-1450
www.uspto.gov

AUG 10 2011

Finnegan, Henderson, Farabow, Garrett & Dunner, L.L.P.
901 New York Avenue, NW
Washington, DC 20001-4413

In re application of : **DECISION ON PETITION**
VADIVELOO, Jeyaraj : **TO MAKE SPECIAL FOR**
Application No.13/009,914 : **NEW APPLICATION**
Filed: January 20, 2011 : **UNDER 37 CFR 1.102**
For: METHOD AND SYSTEM FOR EVALUATING INSURANCE LIABILITIES USING STOCHASTIC MODELING AND SAMPLING TECHNIQUES

This is a decision on the petition filed on January 20, 2011 to make the above-identified application special for accelerated examination procedure under 37 C.F.R. § 1.102(d).

The petition to make the application special is **GRANTED**.

The application is eligible for accelerated examination and the petition complies with the conditions for granting the application special status pursuant to the "Change to Practice for Petitions in Patent Applications to Make Special and for Accelerated Examination" published June 26, 2006, in the Federal Register. (71 Fed. Reg. 36323).

The prosecution of the instant application will be conducted expeditiously according to the following guidelines.

1. The application will be docketed to an examiner and taken up for action within two weeks of the date of this decision.

2. Restriction Practice:
If the examiner determines that the claims are not directed to a single invention, a telephone request to elect one single invention will be made pursuant to MPEP 812.01. As a prerequisite to the grant of this petition, the applicant has agreed to make an oral election, by telephone, without traverse. If the applicant refuses to make an election without traverse, or the examiner cannot reach the applicant after a reasonable effort, the examiner will treat the first claimed invention (invention defined by claim 1) as having being constructively elected without traverse for examination.

3. Office action:
If it is determined that, after appropriate consultation, there is a potential rejection or any other issue to be addressed, the examiner will telephone the applicant and arrange an interview to discuss and resolve the issue. An Office action, other than a Notice of Allowance and Fee(s) Due (Notice of Allowance), will not be issued unless either: 1) an interview was conducted but did not result in agreed to action that places the application in condition for allowance, or, 2) a determination is made that an interview would be unlikely to result in the application being placed in condition for allowance, and 3) an internal conference has been held to review any rejection of any claim.

4. Time for Reply:
An Office action other than a Notice of Allowance or a final Office action will set a shortened statutory period of one month or thirty days, whichever is longer, for reply with no extension of time available under 37 CFR 1.136(a). Failure to timely file a reply within this non-extendible period for reply will result in the abandonment of the application.

5. Reply by Applicant:
A timely reply to an Office action other than the Notice of Allowance must be submitted electronically via EFS or EFS-web and limited to addressing the rejections, objections and requirement made. Any amendment that attempts to: 1) add claims which would result in more than three pending independent claims or more than twenty pending total claims; 2) present claims not encompassed by the pre-examination search or an updated accelerated examination support document; or 3) present claims that are directed to a non-elected invention or an invention other than that previously claimed and examined in the application, will be treated as not fully responsive and will not be entered.

For any amendment to the claims (including any new claim) that is not encompassed by the accelerated examination support document, applicant must provide an updated accelerated examination support document that encompasses the amended or new claims at the time of filing of the amendment.

To proceed expeditiously with the examination, it is recommended that a reply with amendments made to any claim or with any new claim being added be accompanied by an updated accelerated examination support document or a statement explaining how the amended or new claim is supported by the original accelerated examination support document.

6. Information Disclosure Statement (IDS):
Any IDS filed during prosecution must be submitted electronically via EFS or EFS-web, accompanied by an updated accelerated examination support document, and be in compliance with 37 CFR 1.97 and 1.98.

7. Post-Allowance Processing:
To expedite processing of the allowed application into a patent, the applicant must: 1) pay the required fees within one month of the date of the Notice of Allowance, and 2) not file any post allowance papers not required by the Office. In no event may the issue fee be paid and accepted later than three months from the date of the Notice of Allowance.

8. After-Final and Appeal Procedures:
To expedite prosecution, after receiving the final Office action, applicant must: 1) promptly file a notice of appeal, an appeal brief and appeal fees; and 2) not request a pre-appeal brief conference.

Any amendment, affidavit or other evidence filed after final Office action must comply with applicable rules and the requirements outlined in numbered paragraphs 5 and 6 above.

On appeal, the application will proceed according to normal appeal procedures. After appeal, the application will again be treated special.

9. Proceedings Outside the Normal Examination Process:
If the application becomes involved in a proceeding that is outside the normal examination process (e.g., a secrecy order, national security review, interference proceeding, petitions under 37 CFR 1.181, 182 or 183), the application will be treated special before and after such proceeding.

10. Final Disposition:
The twelve month goal of this accelerated examination procedure ends with a final disposition. The mailing of a final Office action, a Notice of Allowance, the filing of a Notice of Appeal, or the filing of a Request for Continued Examination (RCE) is the final disposition.

If, during prosecution, a paper is not filed electronically using EFS-web, a reply is filed but is not fully responsive, the application is involved in an appeal, or a proceeding outside normal examination process, the application will still be examined expeditiously, however, the final disposition may occur more than twelve months from the filing of the application.

Any inquiry regarding this decision should be directed to Robert Weinhardt, Business Practice Specialist, at (571) 272-6633.

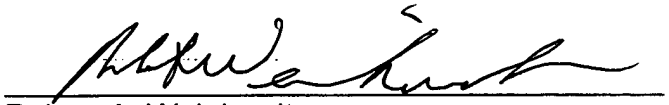

Robert A. Weinhardt
Business Practice Specialist
Technology Center 3600

RW/JM 8/10/11

UNITED STATES PATENT AND TRADEMARK OFFICE

Commissioner for Patents
United States Patent and Trademark Office
P.O. Box 1450
Alexandria, VA 22313-1450
www.uspto.gov

MAILED

FEB 25 2011

OFFICE OF PETITIONS

BROOKS KUSHMAN P.C.
1000 TOWN CENTER
TWENTY-SECOND FLOOR
SOUTHFIELD, MI 48075

In re Application of
James Hendry
Application No. 13/010,066
Filed: January 20, 2011
Attorney Docket No. BIG 0102 PUS

DECISION ON PETITION
TO MAKE SPECIAL UNDER
37 CFR 1.102(c)(1)

This is a decision on the petition under 37 CFR 1.102(c)(1), filed January 20, 2011, to make the above-identified application special based on applicant's age as set forth in M.P.E.P. § 708.02, Section IV.

The petition is **GRANTED**.

A grantable petition to make an application special under 37 CFR 1.102(c)(1) and MPEP § 708.02, Section IV: Applicant's Age must be accompanied by evidence showing that at least one of the applicants is 65 years of age, or more, such as a birth certificate or a statement by applicant. No fee is required

The instant petition includes a statement from applicant. Accordingly, the above-identified application has been accorded "special" status.

Telephone inquiries concerning this decision should be directed to undersigned at 571-272-1642.

All other inquiries concerning either the examination or status of the application should be directed to the Technology Center.

The application is being forwarded to the Office of Patent Application Processing for pre-examination processing. This application will be accorded "special" status once pre-examination processing is complete.

/AMW/
April M. Wise
Petitions Examiner
Office of Petitions

UNITED STATES PATENT AND TRADEMARK OFFICE

UNITED STATES DEPARTMENT OF COMMERCE
United States Patent and Trademark Office
Address: COMMISSIONER FOR PATENTS
P.O. Box 1450
Alexandria, Virginia 22313-1450
www.uspto.gov

| APPLICATION NO. | FILING DATE | FIRST NAMED INVENTOR | ATTORNEY DOCKET NO. | CONFIRMATION NO. |
|---|---|---|---|---|
| 13/010,078 | 01/20/2011 | Jayson T. Sandberg | LD-001 | 2003 |

53014 7590 03/23/2011

Clause Eight Intell. Prop. Service
P.O Box 131270
Carlsbad, CA 92013

| EXAMINER | |
|---|---|
| LOVELL, LEAH S | |
| ART UNIT | PAPER NUMBER |
| 2885 | |
| MAIL DATE | DELIVERY MODE |
| 03/23/2011 | PAPER |

**Please find below and/or attached an Office communication concerning this application or proceeding.**

The time period for reply, if any, is set in the attached communication.

UNITED STATES PATENT AND TRADEMARK OFFICE

Commissioner for Patents
United States Patent and Trademark Office
P.O. Box 1450
Alexandria, VA 22313-1450
www.uspto.gov

Clause Eight Intell. Prop. Service
P.O Box 131270
Carlsbad CA 92013

| | | |
|---|---|---|
| In re Application of:<br>Jayson SANDBERG<br>Serial No.: 13/010078<br>Filed: 20 January 2011<br>Title: COOLER WITH LED LIGHTING | :<br>:<br>:<br>:<br>:<br>: | DECISION ON PETITION TO MAKE SPECIAL FOR NEW APPLICATION UNDER 37 C.F.R. § 1.102 & M.P.E.P. § 708.2 |

This is a decision on the petition filed on 20 January 2011 to make the above-identified application special for accelerated examination procedure under 37 C.F.R. § 1.102(d).

The petition to make the application special is **DISMISSED**.

## REGULATION AND PRACTICE

A grantable petition to make special under 37 C.F.R. § 1.102(d) and pursuant to the "Change to Practice for Petitions in Patent Applications to Make Special and for Accelerated Examination" published in the Federal Register on June 26, 2006 (71 Fed. Reg. 36323), must satisfy the following conditions:

I. Conditions Regarding the Application:

1. the application must be a non-reissue utility or design application filed under 37 CFR 1.111(a);
2. the application, the petition and the required fees must be filed electronically using the USPTO's electronic filing system (EFS), or EFS-web; if not filed electronically, a statement asserting that EFS and EFS-web were not available during the normal business hours.
3. at the time of filing, the application must be complete under 37 CFR 1.51 and in condition for examination;
4. the application must contain three or fewer independent claims and twenty or fewer total claims and the claims must be directed to a single invention.

II. Conditions Regarding the Petition:

The petition must:
1. be filed with the application;

2. include a statement that applicant agrees not to separately argue the patentability of any independent claim during any appeal in the application;

3. include a statement that applicant agrees to make an election without traverse in a telephone interview;

4. include a statement that applicant agrees to conduct such an interview when requested by the examiner; and

5. include a statement, made based on a good faith belief, that a preexamination search in compliance with the following requirements, was conducted, including an identification of the field of search by United States class and subclass, where applicable, and for database searches, the search logic or chemical structure or sequence used as a query, the name of the file(s) searched and the database service, and the date of the search.

The preexamination search must:

5.1 involve U.S. patents and patent application publications, foreign patent documents, and non-patent literature, unless the applicant can justify with reasonable certainty that no references more pertinent than those already identified are likely to be found in the eliminated sources and includes such a justification with this statement;

5.2. be directed to the claimed invention and encompass all of the features of the claims, giving the claims the broadest reasonable expectation; and

5.3. encompass the disclosed features that may be claimed.

6. must provide in support of the petition an accelerated examination support document. An accelerated examination support document must include:

6.1. an information disclosure statement (IDS) in compliance with 37 CFR 1.98 citing each reference deemed most closely related to the subject matter of each of the claims;

6.2. an identification of all the limitations in the claims that are disclosed by the reference specifying where the limitation is disclosed in the cited reference;

6.3. a detailed explanation of how each of the claims are patentable over the references cited with particularity required by 37 CFR 1.111(b) and (c);

6.4. a concise statement of the utility of the invention as defined in each of the independent claims (unless the application is a design application);

6.5. a showing of where each limitation of the claims finds support under 35 USC 112, first paragraph, in the written description of the specification. If applicable, the showing must also identify: (1) each means- (or step) plus-function claim element that invokes consideration under 35 USC 112, sixth paragraph; and (2) the structure, material, or acts in the specification that corresponds to each means- (or step) plus-function claim element that invokes consideration under 35 USC 112, sixth paragraph; if the application claims the benefit of one or more applications under title 35, United States Code, the showing must also include where each limitation of the claims finds support under 35 USC 112, first paragraph, in each such application in which such supports exists; and

6.6. an identification of any cited references that may be disqualified under 35 USC 103(c).

## REVIEW OF FACTS

The conditions I.1-4; II.5.1-5.3, 6 and 6.1- 6.6, above are considered to have been met. However, the petition fails to comply with conditions section II, subsection 5, above. Therefore, the petition fails to meet the required conditions to be accorded special status under the accelerated examination procedure.

Regarding the requirements of section II, subsection 5, it appears the search outlined in the petition omitted critical search areas by not searching in class 362 subclasses 295, 249, 249.12 and class 220 subclasses 592.01-592.28, 62.11-62.22. In addition, the search logic used "illuminate$," which is too narrow because it excludes the terms, "illumination" and "illuminating." A broader search logic including the search term, "illuminat$," is suggested. Similarly, the search logic used "insulate$," which is too narrow because it excludes the terms, "insulation" and "insulator." A broader search logic including the term, "insulat$," is suggested. Finally, the search logic used the term, "cooler," which is too narrow. A broader search logic including the terms, "fridge$," and "refridgera$," is suggested. Any renewed petition should include the above outlined additional searching. For the above reason, the petition does not meet the requirements of section II, subsection 5, as set forth above.

## DECISION

For the above-stated reasons, the petition is **dismissed**. The application will therefore be taken up by the examiner for action in its regular turn.

Petitioner is given a single opportunity to perfect the petition. Any request for reconsideration of this decision must be submitted within 1 (one) month or 30 (thirty) days, whichever is longer, from the date of this decision in order to be considered timely. Any request for reconsideration must address the deficiencies indicated above.

Petition is reminded that, upon granting of the special status of the application on request for reconsideration, the application will be processed expeditiously. However, due to the dismissal of the instant petition, examination may not be completed within twelve months of the filing date of the application.

Any inquiries regarding this decision should be directed to Quality Assurance Specialist (QAS) Michael Day at (571) 272-1568.

Michael Day, QAS
Technology Center 2800
Semiconductors, Electrical and Optical
Systems and Components

UNITED STATES PATENT AND TRADEMARK OFFICE

UNITED STATES DEPARTMENT OF COMMERCE
United States Patent and Trademark Office
Address: COMMISSIONER FOR PATENTS
P.O. Box 1450
Alexandria, Virginia 22313-1450
www.uspto.gov

| APPLICATION NO. | FILING DATE | FIRST NAMED INVENTOR | ATTORNEY DOCKET NO. | CONFIRMATION NO. |
|---|---|---|---|---|
| 13/010,078 | 01/20/2011 | Jayson T. Sandberg | LD-001 | 2003 |

53014 7590 05/05/2011

Clause Eight Intell. Prop. Service
P.O Box 131270
Carlsbad, CA 92013

| EXAMINER | |
|---|---|
| LOVELL, LEAH S | |
| ART UNIT | PAPER NUMBER |
| 2885 | |
| MAIL DATE | DELIVERY MODE |
| 05/05/2011 | PAPER |

**Please find below and/or attached an Office communication concerning this application or proceeding.**

The time period for reply, if any, is set in the attached communication.

UNITED STATES PATENT AND TRADEMARK OFFICE

Commissioner for Patents
United States Patent and Trademark Office
P.O. Box 1450
Alexandria, VA 22313-1450
www.uspto.gov

Clause Eight Intell. Prop. Service
P.O Box 131270
Carlsbad CA 92013

In re Application of:
SANDBERG, Jayson T.
Serial No.: 13/010,078
Filed: January 20, 2011
Title: COOLER WITH LED LIGHTING

: DECISION ON PETITION TO MAKE SPECIAL FOR NEW APPLICATION UNDER 37 C.F.R. § 1.102 & M.P.E.P. § 708.02

This is a decision on the petition to make the above-identified application special for accelerated examination procedure under 37 C.F.R. § 1.102(d) filed January 20, 2011, and renewed request mail room date 2 April 2011.

The petition to make the application special is GRANTED.

The application is eligible for accelerated examination and the petition complies with the conditions for granting the application special status pursuant to the "Change to Practice for Petitions in Patent Applications to Make Special and for Accelerated Examination" published June 26, 2006, in the Federal Register. (71 Fed. Reg. 36323).

The prosecution of the instant application will be conducted expeditiously according to the following guidelines.

1. The application will be docketed to an examiner and taken up for action within two weeks of the date of this decision.

2. Restriction Practice:
   If the examiner determines that the claims are not directed to a single invention, a telephone request to elect one single invention will be made pursuant to MPEP 812.01. As a prerequisite to the grant of this petition, the applicant has agreed to make an oral election, by telephone, without traverse. If the applicant refuses to make an election without traverse, or the examiner cannot reach the applicant after a reasonable effort, the examiner will treat the first claimed invention (invention defined by claim 1) as having being constructively elected without traverse for examination.

3. Office action:
If it is determined that, after appropriate consultation, there is a potential rejection or any other issue to be addressed, the examiner will telephone the applicant and arrange an interview to discuss and resolve the issue. An Office action, other than a Notice of Allowance and Fee(s) Due (Notice of Allowance), will not be issued unless either: 1) an interview was conducted but did not result in agreed to action that places the application in condition for allowance, or, 2) a determination is made that an interview would be unlikely to result in the application being placed in condition for allowance, and 3) an internal conference has been held to review any rejection of any claim.

4. Time for Reply:
An Office action other than a Notice of Allowance or a final Office action will set a shortened statutory period of one month or thirty days, whichever is longer, for reply with no extension of time available under 37 CFR 1.136(a). Failure to timely file a reply within this non-extendible period for reply will result in the abandonment of the application.

5. Reply by Applicant:
A timely reply to an Office action other than the Notice of Allowance must be submitted electronically via EFS or EFS-web and limited to addressing the rejections, objections and requirement made. Any amendment that attempts to: 1) add claims which would result in more than three pending independent claims or more than twenty pending total claims; 2) present claims not encompassed by the pre-examination search or an updated accelerated examination support document; or 3) present claims that are directed a non-elected invention or an invention other than that previously claimed and examined in the application, will be treated as not fully responsive and will not be entered.

   For any amendment to the claims (including any new claim) that is not encompassed by the accelerated examination support document, applicant must provide an updated accelerated examination support document that encompasses the amended or new claims at the time of filing of the amendment.

   To proceed expeditiously with the examination, it is recommended that a reply with amendments made to any claim or with any new claim being added be accompanied by an updated accelerated examination support document or a statement explaining how the amended or new claim is supported by the original accelerated examination support document.

6. Information Disclosure Statement (IDS):
Any IDS filed during prosecution must be submitted electronically via EFS or EFS-web, accompanied by an updated accelerated examination support document, and be in compliance with 37 CFR 1.97 and 1.98.

7. Post-Allowance Processing:
   To expedite processing of the allowed application into a patent, the applicant must: 1) pay the required fees within one month of the date of the Notice of Allowance, and 2) not file any post allowance papers not required by the Office. In no event may the issue fee be paid and accepted later than three months from the date of the Notice of Allowance.

8. After-Final and Appeal Procedures:
   To expedite prosecution, after receiving the final Office action, applicant must: 1) promptly file a notice of appeal, an appeal brief and appeal fees; and 2) not request a pre-appeal brief conference.

   Any amendment, affidavit or other evidence filed after final Office action must comply with applicable rules and the requirements outlined in numbered paragraphs 5 and 6 above.

   On appeal, the application will proceed according to normal appeal procedures. After appeal, the application will again be treated special.

9. Proceedings Outside the Normal Examination Process:
   If the application becomes involved in a proceeding that is outside the normal examination process (e.g., a secrecy order, national security review, interference proceeding, petitions under 37 CFR 1.181, 182 or 183), the application will be treated special before and after such proceeding.

10. Final Disposition:
    The twelve month goal of this accelerated examination procedure ends with a final disposition. The mailing of a final Office action, a Notice of Allowance, the filing of a Notice of Appeal, or the filing of a Request for Continued Examination (RCE) is the final disposition.

If, during prosecution, a paper is not filed electronically using EFS-web, a reply is filed but is not fully responsive, the application is involved in an appeal, or a proceeding outside normal examination process, the application will still be examined expeditiously, however, the final disposition may occur more than twelve months from the filing of the application.

Any inquiry regarding this decision should be directed to Quality Assurance Specialist (QAS) Michael Day at (571) 272-1568.

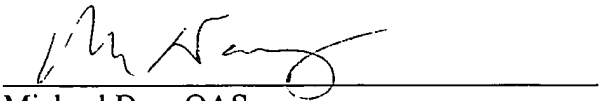

Michael Day, QAS
Technology Center 2800
Semiconductors, Electrical and Optical
Systems and Components

UNITED STATES PATENT AND TRADEMARK OFFICE

Commissioner for Patents
United States Patent and Trademark Office
P.O. Box 1450
Alexandria, VA 22313-1450
www.uspto.gov

MAILED

JAN 30 2012

OFFICE OF PETITIONS

**Jefferson IP Law, LLP**
**1130 Connecticut Ave., NW**
**Suite 420**
**Washington DC 20036**

In re Application of
Woo Yong Kang
Application No.: 13/010,208
Filed: January 20, 2011
Attorney Docket No.: 0116-0001
For: PRINTING SYSTEM AND METHOD

**: DECISION ON REQUEST TO**
**: PARTICIPATE IN THE PATENT**
**: PROSECUTION HIGHWAY**
**: PROGRAM AND PETITION**
**: TO MAKE SPECIAL UNDER**
**: 37 CFR 1.102(a)**

This is a decision on the request to participate in the Patent Prosecution Highway (PPH) program and the petition under 37 CFR 1:102(a), filed September 28, 2011, to make the above-identified application special.

The request and petition are **GRANTED**.

**Discussion**

A grantable request to participate in the PPH program and petition to make special require:

1. The U.S. application is

    a. a Paris Convention application which either
        i. validly claims priority under 35 U.S.C. 119(a) and 37 CFR 1.55 to one or more applications filed in the KIPO, or
        ii. validly claims priority under 35 U.S.C. 119(a)/365(a) to a PCT application that contains no priority claims,

    or

    b. a national stage application under the PCT (an application which entered the national stage in the U.S. from a PCT international application after compliance with 35 U.S.C. 371), which PCT application
        i. validly claims priority under 35 U.S.C. 365(b) to an application filed in the KIPO, or
        ii. validly claims priority under 35 U.S.C. 365(b) to a PCT application that contains no priority claims, or
        iii. contains no priority claim,

    or

    c. a so-called bypass application filed under 35 U.S.C. 111(a) which validly claims benefit under 35 U.S.C. 120 to a PCT application, which PCT application
        i. validly claims priority under 35 U.S.C. 365(b) to an application filed in the KIPO, or

ii. validly claims priority under 35 U.S.C. 365(b) to a PCT application that contains no priority claims, or
iii. contains no priority claim;

2. Applicant must submit a copy of:
   a. The allowable/patentable claim(s) from the KR application(s);
   b. An English translation of the allowable/patentable claim(s), and
   c. A statement that the English translation is accurate (if the claims were published in a language other than English);
3. Applicant must:
   a. Ensure that all the claims in the U.S. application must sufficiently correspond or be amended to sufficiently correspond to the allowable/patentable claim(s) in the KR application(s), and
   b. Submit a claims correspondence table in English;
4. Examination of the U.S. application has not begun;
5. Applicant must submit:
   a. A copy of all the office actions (which are relevant to patentability), excluding "Decision to Grant a Patent" from each of the KR application(s) containing the allowable/patentable claim(s);
   b. An English language translation of the KIPO office action; and
   c. A statement that the English translation is accurate (if the office actions are not in the English language);
6. Applicant must submit:
   a. An IDS listing the documents cited by the KIPO examiner in the KIPO office action (unless already filed in this application); and
   b. Copies of all the documents cited in the KIPO office action, except U.S. patents or U.S. patent application publications (unless already filed in this application);

The request to participate in the PPH program and petition comply with the above requirements. Accordingly, the above-identified application has been accorded "special" status.

This application will be forwarded to the examiner for action on the merits commensurate with this decision.

Telephone inquiries concerning this decision should be directed to Terri Johnson at 571-272-2991.

All other inquiries concerning the examination or status of the application is accessible in the PAIR system at http://uspto.gov/ebc/index.html.

David Bucel
Petitions Examiner
Office of Petitions

UNITED STATES PATENT AND TRADEMARK OFFICE

Commissioner for Patents
United States Patent and Trademark Office
P.O. Box 1450
Alexandria, VA 22313-1450
www.uspto.gov

NIXON PEABODY, LLP
401 9TH STREET, NW
SUITE 900
WASHINGTON, DC 20004-2128

MAILED
APR 04 2012
OFFICE OF PETITIONS

In re Application of
Shinobu Furukawa, et al.
Application No. 13/010,395
Filed: January 20, 2011
Attorney Docket No. 740756-3500

: DECISION GRANTING PETITION
: UNDER 37 CFR 1.313(c)(2)

This is a decision on the petition under 37 CFR 1.313(c)(2), filed April 3, 2012, to withdraw the above-identified application from issue after payment of the issue fee.

The petition is **GRANTED**.

The above-identified application is withdrawn from issue for consideration of a submission under 37 CFR 1.114 (request for continued examination). *See* 37 CFR 1.313(c)(2).

***Petitioner is advised that the issue fee paid on March 21, 2012 cannot be refunded. If, however, this application is again allowed, petitioner may request that it be applied towards the issue fee required by the new Notice of Allowance.***[1]

The petition is not signed by an attorney of record. Nevertheless, in accordance with 37 CFR 1.34, the signature of Ms. Amanda Y. Baker appearing on the correspondence shall constitute a representation to the United States Patent and Trademark Office that he is authorized to represent the particular party on whose behalf he acts. If Ms. Baker desires to receive future correspondence regarding this file, the appropriate power of attorney documents must be submitted. All future correspondence regarding this application file will be directed solely to the above-noted correspondence address of record.

Telephone inquiries regarding this decision should be directed to undersigned at (571) 272-1642. All other inquiries concerning the examination or status of this application should be directed to the Technology Center.

[1] *The request to apply the issue fee to the new Notice may be satisfied by completing and returning the new Part B – Fee(s) Transmittal Form (along with any balance due at the time of submission). Petitioner is advised that the Issue Fee Transmittal Form must be completed and timely submitted to avoid abandonment of the application.*

This application is being referred to Technology Center AU 2814 for processing of the request for continued examination under 37 CFR 1.114 and for consideration of the concurrently filed information disclosure statement.

/AMW/
April M. Wise
Petitions Examiner
Office of Petitions

Doc Code: PPH.PCT.652
Document Description: Petition to make special under PCT-Patent Pros Hwy

PTO/SB/20PCT-KR (06-10)
Approved for use through 01/31/2012. OMB 0651-0058
U.S. Patent and Trademark Office; U. S. DEPARTMENT OF COMMERCE
Under the Paperwork Reduction Act of 1995, no persons are required to respond to a collection of information unless it displays a valid OMB control number.

# REQUEST FOR PARTICIPATION IN THE PATENT COOPERATION TREATY - PATENT PROSECUTION HIGHWAY (PCT-PPH) PILOT PROGRAM BETWEEN THE KOREAN INTELLECTUAL PROPERTY OFFICE (KIPO) AND THE USPTO

| | | | |
|---|---|---|---|
| Application No: | 13/010,398 | Filing date: | January 20, 2011 |
| First Named Inventor: | Glen Lester Weaver | | |
| Title of the Invention: | MICROBIAL REDUCTION IN A PROCESSING STREAM OF A MILLED PRODUCT | | |

**THIS REQUEST FOR PARTICIPATION IN THE PCT-PPH PILOT PROGRAM ALONG WITH THE REQUIRED DOCUMENTS MUST BE SUBMITTED VIA EFS-WEB. INFORMATION REGARDING EFS-WEB IS AVAILABLE AT HTTP://WWW.USPTO.GOV/EBC/EFS_HELP.HTML**

**APPLICANT HEREBY REQUESTS PARTICIPATION IN THE PCT-PPH PROGRAM AND PETITIONS TO MAKE THE ABOVE-IDENTIFIED APPLICATION SPECIAL UNDER THE PCT-PPH PROGRAM.**

The above-identified application is (1) a national stage entry of the corresponding PCT application, or (2) a national stage entry of another PCT application which claims priority to the corresponding PCT application, or (3) a national application that claims domestic/ foreign priority to the corresponding PCT application, or (4) a national application which forms the basis for the priority claim in the corresponding PCT application, or (5) a continuing application of a U.S. application that satisfies one of (1) to (4) above, or (6) a U.S. application that claims domestic benefit to a U.S. provisional application which forms the basis for the priority claim in the corresponding PCT application.

**The corresponding PCT application number(s) is/are:** PCT/US2011/021896

**The international filing date of the corresponding PCT application(s) is/are:** January 20, 2011

**I. List of Required Documents:**

a. **A copy of the latest international work product (WO/ISA, WO/IPEA, or IPER) in the above-identified corresponding PCT application(s)**

☑ Is attached.

☐ Is not attached because the document is already in the U.S. application.

b. **A copy of all claims which were indicated as having novelty, inventive step and industrial applicability in the above-identified corresponding PCT application(s).**

☑ Is attached.

☐ Is not attached because the document is already in the U.S. application.

c. **English translations of the documents in a. and b. above are attached (if the documents are not in the English language). A statement that the English translation is accurate is attached for the document in b. above.**



This collection of information is required by 35 U.S.C. 119, 37 CFR 1.55, and 37 CFR 1.102(d). The information is required to obtain or retain a benefit by the public, which is to file (and by the USPTO to process) an application. Confidentiality is governed by 35 U.S.C. 122 and 37 CFR 1.11 and 1.14. This collection is estimated to take 2 hours to complete, including gathering, preparing, and submitting the completed application form to the USPTO. Time will vary depending upon the individual case. Any comments on the amount of time you require to complete this form and/or suggestions for reducing this burden should be sent to the Chief Information Officer, U.S. Patent and Trademark Office, U.S. Department of Commerce, P.O. Box 1450, Alexandria, VA 22313-1450. DO NOT SEND FEES OR COMPLETED FORMS TO THIS ADDRESS.

Approved for use through 01/31/2012. OMB 0651-0058
U.S.Patent and Trademark Office; U.S. DEPARTMENT OF COMMERCE

Under the Paperwork Reduction Act of 1995, no persons are required to respond to a collection of information unless it displays a valid OMB control number.

# REQUEST FOR PARTICIPATION IN THE PCT-PPH PILOT PROGRAM BETWEEN THE KIPO AND THE USPTO

(continued)

| | |
|---|---|
| Application No.: | 13/010,398 |
| First Named Inventor: | Glen Lester Weaver |

d. **(1) An information disclosure statement listing the documents cited in the international work products (ISR, WO/ISA, WO/IPEA, IPER) of the corresponding PCT application.**

☑ Is attached

☐ Has already been filed in the above-identified U.S. application on _____

**(2) Copies of all documents (except) for U.S. patents or U.S. patent application publications)**

☑ Are attached.

☐ Have already been filed in the above-identified U.S. application on _____

**II. Claims Correspondence Table:**

| Claims in US Application | Patentable Claims in the corresponding PCT Application | Explanation regarding the correspondence |
|---|---|---|
| 1-25 | 1-25 | See attached Explanation Regarding the Correspondence Sheet |
| | | |
| | | |
| | | |
| | | |
| | | |
| | | |
| | | |
| | | |
| | | |
| | | |
| | | |
| | | |
| | | |
| | | |
| | | |
| | | |
| | | |

**III. All the claims in the US application sufficiently correspond to the patentable claims in the corresponding PCT application.**

| | |
|---|---|
| Signature /Ryan T. Grace/ | Date 11/3/2011 |
| Name (Print/Typed) Ryan T. Grace | Registration Number 52,596 |

EXPLANATION REGARDING THE CORRESPONDENCE SHEET

| Claims in US Application | Patentable Claims in the Corresponding PCT Application | Explanation regarding the correspondence |
|---|---|---|
| 1 | 1 | Claim 1 in the U.S. Application sufficiently corresponds to claim 1 in the corresponding PCT Application. In a U.S. Preliminary Amendment filed April 4, 2011, the term "produce" was a typographical error that was changed to "product". |
| 2 | 2 | Claim 2 in the U.S. Application sufficiently corresponds to claim 2 in the corresponding PCT Application. In a U.S. Preliminary Amendment filed April 4, 2011, the term "barely" was a typographical error that was changed to "barley". |
| 3 | 3 | Claim 3 in the U.S. Application sufficiently corresponds to claim 3 in the corresponding PCT Application. |

| Claims in US Application | Patentable Claims in the Corresponding PCT Application | Explanation regarding the correspondence |
|---|---|---|
| 4 | 4 | Claim 4 in the U.S. Application sufficiently corresponds to claim 4 in the corresponding PCT Application. In a U.S. Preliminary Amendment filed April 4, 2011, the term "method" was a typographical error that was changed to "process" in order to correspond to the process claimed in independent claim 1. |
| 5 | 5 | Claim 5 in the U.S. Application sufficiently corresponds to claim 5 in the corresponding PCT Application. In a U.S. Preliminary Amendment filed April 4, 2011, the term "claim 11" was a typographical error that was changed to "claim 1" and the term "method" was a typographical error that was changed to "process" in order to correspond to the process claimed in independent claim 1. |
| 6 | 6 | Claim 6 in the U.S. Application sufficiently corresponds to claim 6 in the corresponding PCT Application. In a U.S. Preliminary Amendment filed April 4, 2011, the term "method" was a typographical error that was changed to "process" in order to correspond to the process claimed in independent claim 1. |

| Claims in US Application | Patentable Claims in the Corresponding PCT Application | Explanation regarding the correspondence |
|---|---|---|
| 7 | 7 | Claim 7 in the U.S. Application sufficiently corresponds to claim 7 in the corresponding PCT Application. In a U.S. Preliminary Amendment filed April 4, 2011, the term "method" was a typographical error that was changed to "process" in order to correspond to the process claimed in independent claim 1. |
| 8 | 8 | Claim 8 in the U.S. Application sufficiently corresponds to claim 8 in the corresponding PCT Application. In a U.S. Preliminary Amendment filed April 4, 2011, the term "method" was a typographical error that was changed to "process" in order to correspond to the process claimed in independent claim 1. |
| 9 | 9 | Claim 9 in the U.S. Application sufficiently corresponds to claim 9 in the corresponding PCT Application. In a U.S. Preliminary Amendment filed April 4, 2011, the term "method" was a typographical error that was changed to "process" in order to correspond to the process claimed in independent claim 1. |

| Claims in US Application | Patentable Claims in the Corresponding PCT Application | Explanation regarding the correspondence |
|---|---|---|
| 10 | 10 | Claim 10 in the U.S. Application sufficiently corresponds to claim 10 in the corresponding PCT Application. |
| 11 | 11 | Claim 11 in the U.S. Application sufficiently corresponds to claim 11 in the corresponding PCT Application. |
| 12 | 12 | Claim12 in the U.S. Application sufficiently corresponds to claim 12 in the corresponding PCT Application. In a U.S. Preliminary Amendment filed April 4, 2011, the term "barely" was a typographical error that was changed to "barley". |
| 13 | 13 | Claim 13 in the U.S. Application sufficiently corresponds to claim 13 in the corresponding PCT Application. |
| 14 | 14 | Claim 14 in the U.S. Application sufficiently corresponds to claim 14 in the corresponding PCT Application. |
| 15 | 15 | Claim 15 in the U.S. Application sufficiently corresponds to claim 15 in the corresponding PCT Application. |
| 16 | 16 | Claim 16 in the U.S. Application sufficiently corresponds to claim 16 in the corresponding PCT Application. |

| Claims in US Application | Patentable Claims in the Corresponding PCT Application | Explanation regarding the correspondence |
|---|---|---|
| 17 | 17 | Claim 17 in the U.S. Application sufficiently corresponds to claim 17 in the corresponding PCT Application. |
| 18 | 18 | Claim 18 in the U.S. Application sufficiently corresponds to claim 18 in the corresponding PCT Application. |
| 19 | 19 | Claim 19 in the U.S. Application sufficiently corresponds to claim 19 in the corresponding PCT Application. |
| 20 | 20 | Claim 20 in the U.S. Application sufficiently corresponds to claim 20 in the corresponding PCT Application. |
| 21 | 21 | Claim 21 in the U.S. Application sufficiently corresponds to claim 21 in the corresponding PCT Application. |
| 22 | 22 | Claim 22 in the U.S. Application sufficiently corresponds to claim 22 in the corresponding PCT Application. |
| 23 | 23 | Claim 23 in the U.S. Application sufficiently corresponds to claim 23 in the corresponding PCT Application. |
| 24 | 24 | Claim 24 in the U.S. Application sufficiently corresponds to claim 24 in the corresponding PCT Application. |

| Claims in US Application | Patentable Claims in the Corresponding PCT Application | Explanation regarding the correspondence |
|---|---|---|
| 25 | 25 | Claim 25 in the U.S. Application sufficiently corresponds to claim 25 in the corresponding PCT Application. |

# PATENT COOPERATION TREATY

From the INTERNATIONAL SEARCHING AUTHORITY

To:

RYAN T. GRACE

ADVENT IP, P.C.,L.L.O. 2425 SOUTH 144TH STREET SUITE202 OMAHA NE 68144 USA

# PCT

OCT 24 2011

## NOTIFICATION OF TRANSMITTAL OF THE INTERNATIONAL SEARCH REPORT AND THE WRITTEN OPINION OF THE INTERNATIONAL SEARCHING AUTHORITY, OR THE DECLARATION

**(PCT Rule 44.1)**

| | |
|---|---|
| Applicant's or agent's file reference<br>15721.0734WOU1 | Date of mailing *(day/month/year)* 18 OCTOBER 2011 (18.10.2011)<br>**FOR FURTHER ACTION** See paragraphs 1 and 4 below |
| International application No.<br>**PCT/US2011/021896** | International filing date *(day/month/year)*<br>**20 JANUARY 2011 (20.01.2011)** |

Applicant

**CONAGRA FOODS FOOD INGREDIENTS COMPANY, INC. et al**

1. ☒ The applicant is hereby notified that the international search report and the written opinion of the International Searching Authority have been established and are transmitted herewith.

**Filing of amendments and statement under Article 19:**

The applicant is entitled, if he so wishes, to amend the claims of the international application (see Rule 46):

**When?** The time limit for filing such amendments is normally two months from the date of transmittal of the international search report.

**Where?** Directly to the International Bureau of WIPO, 34 chemin des Colombettes 1211 Geneva 20, Switzerland, Facsimile No.: +41 22 338 82 70

**For more detailed instructions,** see *PCT Applicant's Guide*, International Phase, paragraphs 9.004 . 9.011.

2. ☐ The applicant is hereby notified that no international search report will be established and that the declaration under Article 17(2)(a) to that effect and the written opinion of the International Searching Authority are transmitted herewith.

3. ☐ **With regard to any protest** against payment of (an) additional fee(s) under Rule 40.2, the applicant is notified that:

☐ the protest together with the decision thereon has been transmitted to the International Bureau together with any request to forward the texts of both the protest and the decision thereon to the designated Offices.

☐ no decision has been made yet on the protest; the applicant will be notified as soon as a decision is made.

4. **Reminders**

The applicant may submit comments on an informal basis on the written opinion of the International Searching Authority to the International Bureau. The International Bureau will send a copy of such comments to all designated Offices unless an international preliminary examination report has been or is to be established. Following the expiration of 30 months from the priority date, these comments will also be made available to the public.

Shortly after the expiration of **18 months** from the priority date, the international application will be published by the International Bureau. If the applicant wishes to avoid or postpone publication, a notice of withdrawal of the international application, or of the priority claim, must reach the International Bureau before the completion of the technical preparations for international publication (Rules 90bis.1 and 90bis.3).

Within **19 months** from the priority date, but only in respect of some designated Offices, a demand for international preliminary examination must be filed if the applicant wishes to postpone the entry into the national phase **until 30 months** from the priority date (in some Offices even later); otherwise, the applicant must, **within 20 months** from the priority date, perform the prescribed acts for entry into the national phase before those designated Offices.

In respect of other designated Offices, the time limit of **30 months** (or later) will apply even if no demand is filed within 19months.

For details about the applicable time limits, Office by Office, see www.wipo.int/pct/en/texts/time_limits.html and the PCT Applicant's Guide, National Chapters.

| | |
|---|---|
| Name and mailing address of the ISA/KR<br>Korean Intellectual Property Office<br>Government Complex-Daejeon, 189 Cheongsa-ro, Seo-gu, Daejeon 302-701, Republic of Korea<br>Facsimile No. 82-42-472-7140 | Authorized officer<br>COMMISSIONER<br>Telephone No. 82-42-481-8752 |

* Attention

Copies of the documents cited in the international search report can be searched in the following Korean Intellectual Property Office English website for three months from the date of mailing of the international search report.

http://www.kipo.go.kr/en/ => PCT Services => PCT Services

ID : PCT international application number
PW : **6PNL8MYD**

Inquiries related to PCT International Search Report or Written Opinion prepared by KIPO as an International Searching Authority can be answered not only by KIPO but also through IPKC (Intellectual Property Korea Center), located in Vienna, VA, which functions as a PCT Help Desk for PCT applicants.

Homepage: http://www.ipkcenter.com
Email: ipkc@ipkcenter.com
Phone: +1 703 388 1066
Fax: +1 703 388 1084

# PATENT COOPERATION TREATY

# PCT

## INTERNATIONAL SEARCH REPORT

(PCT Article 18 and Rules 43 and 44)

RECEIVED
OCT 24 2011

| Applicant's or agent's file reference | FOR FURTHER ACTION | see Form PCT/ISA/220 as well as, where applicable, item 5 below. |
|---|---|---|
| 15721.0734WOU1 | | |
| International application No. | International filing date *(day/month/year)* | (Earliest) Priority Date *(day/month/year)* |
| **PCT/US2011/021896** | **20 JANUARY 2011 (20.01.2011)** | 20 JANUARY 2010 (20.01.2010) |

Applicant

**CONAGRA FOODS FOOD INGREDIENTS COMPANY, INC. et al**

This International search report has been prepared by this International Searching Authority and is transmitted to the applicant according to Article 18. A copy is being transmitted to the International Bureau.

This international search report consists of a total of 3 sheets.

☐ It is also accompanied by a copy of each prior art document cited in this report.

1. **Basis of the report**
   a. With regard to the **language**, the international search was carried out on the basis of:
      ☒ the international application in the language in which it was filed
      ☐ a translation of the international application into _____, which is the language of a translation furnished for the purposes of international search (Rules 12.3(a) and 23.1(b))
   b. ☐ This international search report has been established taking into account the **rectification of an obvious mistake** authorized by or notified to this Authority under Rule 91 (Rule 43.6*bis*(a)).
   c. ☐ With regard to any **nucleotide and/or amino acid sequence** disclosed in the international application, see Box No. I.
2. ☐ **Certain claims were found unsearchable** (See Box No. II)
3. ☐ **Unity of invention is lacking** (See Box No. III)
4. With regard to the **title**,
   ☒ the text is approved as submitted by the applicant.
   ☐ the text has been established by this Authority to read as follows:

5. With regard to the **abstract**,
   ☒ the text is approved as submitted by the applicant.
   ☐ the text has been established, according to Rule 38.2, by this Authority as it appears in Box No. IV. The applicant may, within one month from the date of mailing of this international search report, submit comments to this Authority.
6. With regard to the drawings,
   a. the figure of the **drawings** to be published with the abstract is Figure No. _____
      ☐ as suggested by the applicant.
      ☐ as selected by this Authority, because the applicant failed to suggest a figure.
      ☐ as selected by this Authority, because this figure better characterizes the invention.
   b. ☒ none of the figure is to be published with the abstract.

INTERNATIONAL SEARCH REPORT

International application No.
**PCT/US2011/021896**

**A. CLASSIFICATION OF SUBJECT MATTER**

***A21D 8/02(2006.01)i, A21D 8/00(2006.01)i, A21D 17/00(2006.01)i***

According to International Patent Classification (IPC) or to both national classification and IPC

**B. FIELDS SEARCHED**

Minimum documentation searched (classification system followed by classification symbols)

A21D 8/02; A23B 9/02; A21D 15/04; A21D 2/00; A23L 1/20; A23L 1/214; A23L 1/30; A21D 15/06; A21D 6/00

Documentation searched other than minimum documentation to the extent that such documents are included in the fields searched

Korean utility models and applications for utility models

Japanese utility models and applications for utility models

Electronic data base consulted during the international search (name of data base and, where practicable, search terms used)

eKOMPASS(KIPO internal) & Keywords: milled product, flour, microbial treatment, moisture content, radio frequency, convey, etc.

**C. DOCUMENTS CONSIDERED TO BE RELEVANT**

| Category* | Citation of document, with indication, where appropriate, of the relevant passages | Relevant to claim No. |
|---|---|---|
| A | US 2007-0212472 A1 (ANTON HOLENSTEIN et al.) 13 September 2007<br>See the whole document | 1-25 |
| A | US 2006-0013927 A1 (DAVID J. GEVEKE et al.) 19 January 2006<br>See the whole document | 1-25 |
| A | EP 1079694 B1 (CARGILL INCORPORATED) 03 August 2005<br>See the whole document | 1-25 |
| A | EP 0512259 A2 (R.F. SYSTEMS SRL) 11 November 1992<br>See the whole document | 1-25 |
| A | US 05789012 A (KARA M. SLIMAK) 04 August 1998<br>See the whole document | 1-25 |
| A | US 04478857 A (KIRK B. STAUSS) 23 October 1984<br>See the whole document | 1-25 |

☐ Further documents are listed in the continuation of Box C.

☒ See patent family annex.

* Special categories of cited documents:

"A" document defining the general state of the art which is not considered to be of particular relevance

"E" earlier application or patent but published on or after the international filing date

"L" document which may throw doubts on priority claim(s) or which is cited to establish the publication date of citation or other special reason (as specified)

"O" document referring to an oral disclosure, use, exhibition or other means

"P" document published prior to the international filing date but later than the priority date claimed

"T" later document published after the international filing date or priority date and not in conflict with the application but cited to understand the principle or theory underlying the invention

"X" document of particular relevance; the claimed invention cannot be considered novel or cannot be considered to involve an inventive step when the document is taken alone

"Y" document of particular relevance; the claimed invention cannot be considered to involve an inventive step when the document is combined with one or more other such documents,such combination being obvious to a person skilled in the art

"&" document member of the same patent family

| Date of the actual completion of the international search | Date of mailing of the international search report |
|---|---|
| 17 OCTOBER 2011 (17.10.2011) | **18 OCTOBER 2011 (18.10.2011)** |


Name and mailing address of the ISA/KR

Korean Intellectual Property Office
Government Complex-Daejeon, 189 Cheongsa-ro,
Seo-gu, Daejeon 302-701, Republic of Korea

Facsimile No. 82-42-472-7140

Authorized officer

Heo, Joo-Hyung

Telephone No. 82-42-481-8150

## INTERNATIONAL SEARCH REPORT

Information on patent family members

International application No.
**PCT/US2011/021896**

| Patent document cited in search report | Publication date | Patent family member(s) | Publication date |
|---|---|---|---|
| US 2007-0212472 A1 | 13.09.2007 | DE 10-2004-041578 A1 | 02.03.2006 |
| | | WO 2006-021106 A1 | 02.03.2006 |
| US 2006-0013927 A1 | 19.01.2006 | None | |
| EP 1079694 B1 | 03.08.2005 | AT 300872 T | 15.08.2005 |
| | | AU 2001-20952 B2 | 26.05.2005 |
| | | CA 2395253 A1 | 05.07.2001 |
| | | DE 69926499 T2 | 14.06.2006 |
| | | JP 2003-518372 A | 10.06.2003 |
| | | KR 10-0525860 B1 | 02.11.2005 |
| | | US 7241462 B2 | 10.07.2007 |
| | | WO 01-47364 A1 | 05.07.2001 |
| EP 0512259 A2 | 11.11.1992 | IT VI910059 A1 | 12.10.1992 |
| US 05789012 A | 04.08.1998 | EP 0290471 B1 | 22.04.1992 |
| | | WO 87-04599 A1 | 13.08.1987 |
| US 04478857 A | 23.10.1984 | None | |

# PATENT COOPERATION TREATY

From the
INTERNATIONAL SEARCHING AUTHORITY

To:
RYAN T. GRACE

ADVENT IP, P.C.,L.L.O. 2425 SOUTH 144TH STREET
SUITE202 OMAHA NE 68144 USA

# PCT

RECEIVED
OCT 24 2011

**WRITTEN OPINION OF THE INTERNATIONAL SEARCHING AUTHORITY**

**(PCT Rule 43bis.1)**

| | |
|---|---|
| Date of mailing *(day/month/year)* | **18 OCTOBER 2011 (18.10.2011)** |
| Applicant's or agent's file reference<br>15721.0734WOU1 | **FOR FURTHER ACTION**<br>See paragraph 2 below |

| International application No. | International filing date *(day/month/year)* | Priority date *(day/month/year)* |
|---|---|---|
| **PCT/US2011/021896** | **20 JANUARY 2011 (20.01.2011)** | 20 JANUARY 2010 (20.01.2010) |

International Patent Classification (IPC) or both national classification and IPC

***A21D 8/02(2006.01)i, A21D 8/00(2006.01)i, A21D 17/00(2006.01)i***

Applicant

**CONAGRA FOODS FOOD INGREDIENTS COMPANY, INC. et al**

1. This opinion contains indications relating to the following items:

- ☒ Box No. I Basis of the opinion
- ☐ Box No. II Priority
- ☐ Box No. III Non-establishment of opinion with regard to novelty, inventive step and industrial applicability
- ☐ Box No. IV Lack of unity of invention
- ☒ Box No. V Reasoned statement under Rule 43bis.1(a)(i) with regard to novelty, inventive step or industrial applicability; citations and explanations supporting such statement
- ☐ Box No. VI Certain documents cited
- ☐ Box No. VII Certain defects in the international application
- ☐ Box No. VIII Certain observations on the international application

2. **FURTHER ACTION**

If a demand for international preliminary examination is made, this opinion will be considered to be a written opinion of the International Preliminary Examining Authority ("IPEA") except that this does not apply where the applicant chooses an Authority other than this one to be the IPEA and the chosen IPEA has notified the International Bureau under Rule 66.1bis(b) that written opinions of this International Searching Authority will not be so considered.

If this opinion is, as provided above, considered to be a written opinion of the IPEA, the applicant is invited to submit to the IPEA a written reply together, where appropriate, with amendments, before the expiration of 3 months from the date of mailing of Form PCT/ISA/220 or before the expiration of 22 months from the priority date, whichever expires later.
For further options, see Form PCT/ISA/220.

| Name and mailing address of the ISA/KR | Date of completion of this opinion | Authorized officer |
|---|---|---|
| Korean Intellectual Property Office<br>Government Complex-Daejeon, 189 Cheongsa-ro, Seo-gu, Daejeon 302-701, Republic of Korea<br>Facsimile No. 82-42-472-7140 | 17 OCTOBER 2011 (17.10.2011) | Heo, Joo-Hyung<br>Telephone No.82-42-481-8150 |

**WRITTEN OPINION OF THE INTERNATIONAL SEARCHING AUTHORITY**

International application No.
**PCT/US2011/021896**

**Box No. I Basis of this opinion**

1. With regard to the **language**, this opinion has been established on the basis of:

   ☒ the international application in the language in which it was filed

   ☐ a translation of the international application into _____, which is the language of a translation furnished for the purposes of international search (Rules 12.3(a) and 23.1(b))

2. ☐ This opinion has been established taking into account the **rectification of an obvious mistake** authorized by or notified to this Authority under Rule 91 (Rule 43*bis*.1(a))

3. With regard to any **nucleotide and/or amino acid sequence** disclosed in the international application, this opinion has been established on the basis of:

   a. a sequence listing filed or furnished
      ☐ on paper
      ☐ in electronic form

   b. time of filing or furnishing
      ☐ contained in the international application as filed.
      ☐ filed together with the international application in electronic form.
      ☐ furnished subsequently to this Authority for the purposes of search.

4. ☐ In addition, in the case that more than one version or copy of a sequence listing has been filed or furnished, the required statements that the information in the subsequent or additioanl copies is identical to that in the application as filed or does not go beyond the application as filed, as appropriate, were furnished.

5. Additional comments:

**WRITTEN OPINION OF THE INTERNATIONAL SEARCHING AUTHORITY**

International application No.
**PCT/US2011/021896**

**Box No. V Reasoned statement under Rule 43bis.1(a)(i) with regard to novelty, inventive step or industrial applicability; citations and explanations supporting such statement**

1. Statement

| | | | |
|---|---|---|---|
| Novelty (N) | Claims | 1-25 | YES |
| | Claims | NONE | NO |
| Inventive step (IS) | Claims | 1-25 | YES |
| | Claims | NONE | NO |
| Industrial applicability (IA) | Claims | 1-25 | YES |
| | Claims | NONE | NO |

2. Citations and explanations :

Reference is made to the following documents:

D1: US 2007-0212472 A1 (ANTON HOLENSTEIN et al.) 13 September 2007
D2: US 2006-0013927 A1 (DAVID J. GEVEKE et al.) 19 January 2006

(1) Novelty and Inventive Step

Claims 1 and 11 relate to a process for microbial treatment of a milled product stream, the process comprising: providing a flowable stream of a milled product, wherein the flowable stream of the milled product is preconditioned to have a generally uniform predetermined moisture content throughout the stream, wherein the generally uniform predetermined moisture content throughout the stream (or wherein the stream is from about 12% to about 16%, wherein the generally uniform predetermined moisture content deviates less than about 0.5% throughout the stream); conveying the flowable stream of the milled product through a radio frequency (RF) microbial reduction device, wherein the flowable stream of the milled product is heated to a temperature from about 170°F to about 210°F (or from about 150°F to about 240°F) as the flowable stream of the milled product is conveyed through the microbial reduction device; and after the flowable stream of the milled product is conveyed through the microbial reduction device, conveying the flowable stream of the milled product within a conveyance network having chilled air to cause a temperature reduction of the flowable stream of the milled product to about ambient temperature (or within a closed sanitary conveyance network to cause a temperature reduction of the flowable stream of the milled product).

Claim 19 relates to a process for microbial treatment of a milled grain product stream, the process comprising: receiving a flowable stream of a milled grain product; transporting the flowable stream of milled grain product to a moisture control device, wherein the moisture control device preconditions the flowable stream of milled grain product to have a generally uniform predetermined moisture content from about 12.5% to about 14.5% as the flowable stream of milled grain product passes through the moisture control device, wherein the generally uniform predetermined moisture content deviates less than about 0.5% throughout the stream, wherein at least a portion of the flowable stream has a microbial activity level; after the flowable stream of milled grain product passes through the moisture control device, transporting, by a conveyance network, the flowable stream of milled grain product to a radio RF microbial reduction device in-line with the conveyance network, wherein the RF microbial reduction device heats the flowable stream of milled grain product to a temperature from about 180°F to about 200°F as the flowable stream of milled grain product is conveyed through the RF microbial reduction device to cause a reduction in the microbial activity level of at least 3.0 log CFU/g and to cause less than 10%> denaturation; and after the flowable stream of milled grain product is conveyed through the RF microbial reduction device, conveying the flowable stream of milled grain product within the conveyance network by chilled forced air to cause a temperature reduction of the flowable stream of milled grain product to about ambient temperature.

(Continued on the Supplemental Box)

**Supplemental Box**

In case **the space in any of the preceding boxes is not sufficient.**
Continuation of :

Box V.

Claim 10 relates to a sterile milled product produced according to the process of claim 1.
Claim 21 relates to a milled product stream comprising: a first state, wherein when the milled product stream is in the first state the milled product stream comprises: a supplemental moisture causing the milled product stream to have a generally uniform moisture content from about 12% to about 16% throughout the milled product stream, at least a portion of the milled product stream including a microbial activity level, and a natural functionality; a second state, wherein when the milled product stream is in the second state the milled product stream comprises: a reduction in the microbial activity level in relation to the first state of at least 3.0 log CFU/g, less than 10% denaturation in relation to the natural functionality of the first state, and a generally uniform moisture content from about 12% to about 16% throughout the milled product stream.

D1 discloses a method for preparing a soy flour from soy beans, wherein the method includes the following steps: husking the soy beans; grinding the husked soy beans; deactivating and agglomerating an enzyme system of soy bean particles by subjecting to hydrothermal treatment; grinding the clumps containing deactivated soy bean particles; and adjusting the moisture content of the soybean particles.
D2 discloses a radio frequency electric field treatment system for deactivating organisms in a pumpable food product.

However, none of the prior art documents cited in the international search report (ISR) disclose said process for microbial treatment of a milled product stream. Also, said prior art documents do not disclose said sterile milled product and milled product stream characterized in claims 10 and 21.

Therefore, claims 1, 10, 11, 19, and 21 are considered to be novel under PCT Article 33(2) and inventive under PCT Article 33(3). Dependent claims 2-9, 12-18, 20, and 22-25 are also considered to be novel under PCT Article 33(2) and inventive under PCT Article 33(3).

(2) Industrial Applicability

The subject-matter of claims 1-25 meets the requirements for industrial applicability under PCT Article 33(4).

## CLAIMS DETERMINED TO BE PATENTABLE BY KIPO

1. A process for microbial treatment of a milled product stream, the process comprising:

providing a flowable stream of a milled produce, wherein the flowable stream of the milled product is preconditioned to have a generally uniform predetermined moisture content throughout the stream, wherein the generally uniform predetermined moisture content throughout the stream is from about 12% to about 16%, wherein the generally uniform predetermined moisture content deviates less than about 0.5% throughout the stream;

conveying the flowable stream of the milled product through a radio frequency (RF) microbial reduction device, wherein the flowable stream of the milled product is heated to a temperature from about 170°F to about 210°F as the flowable stream of the milled product is conveyed through the microbial reduction device; and

after the flowable stream of the milled product is conveyed through the microbial reduction device, conveying the flowable stream of the milled product within a conveyance network having chilled air to cause a temperature reduction of the flowable stream of the milled product to about ambient temperature.

2. The process of claim 1, wherein the flowable stream of the milled product is at least one member of a group comprising: a flowable stream of a flour, a flowable stream of a germ, a flowable stream of a bran, a flowable stream of grain, a flowable stream of oats, a flowable stream of rye, a flowable stream of barely, a flowable stream of an ingredient, a flowable stream of a spice, a flowable stream of a sugar, a flowable stream of a milled dehydrated vegetable, a flowable stream of a milled dehydrated fruit, and a flowable stream of a milled dehydrated pepper.

3. The process of claim 1, wherein the flowable stream of milled product is preconditioned to have a generally uniform predetermined moisture content from about 12.5% moisture to about 14.5% moisture throughout the stream, wherein the generally uniform predetermined moisture content deviates less than about 0.2% throughout the stream.

4. The method of claim 1, wherein the radio frequency device is configured to generate a frequency at about 40MHz.

5. The method of claim 1, wherein the flowable stream of the milled product is heated by the RF microbial reduction device to a temperature from about 180°F to about 200°F.

6. The method of claim 1, wherein the conveyance network is a network of duct.

7. The method of claim 6, wherein the network of duct is a closed sanitary network of duct.

8. The method of claim 7, wherein the closed sanitary network of duct is in communication with a heating element to cause a temperature increase of the closed sanitary network of duct.

9. The method of claim 8, wherein the heating element is at least one member of a group comprising, a heating coil and an air heater.

10. A sterile milled product produced according to the process of claim 1.

11. A process for microbial treatment of a milled product stream, the process comprising:

providing a flowable stream of a milled product, wherein the flowable stream of the milled product is precondition to have a generally uniform predetermined moisture content throughout the stream;

transporting the flowable stream of the milled product through a radio frequency (RF) microbial reduction device, wherein the flowable stream of the milled product is heated to a temperature from about 150°F to about 240°F while flowing through the RF microbial reduction device; and

after the flowable stream of the milled product is conveyed through the RF microbial reduction device, conveying the flowable stream of the milled product within a closed sanitary

conveyance network to cause a temperature reduction of the flowable stream of the milled product.

12. The process of claim 11, wherein the flowable stream of the milled product is at least one member of a group comprising: a flowable stream of a flour, a flowable stream of a germ, a flowable stream of a bran, a flowable stream of grain, a flowable stream of oats, a flowable stream of rye, a flowable stream of barely, a flowable stream of an ingredient, a flowable stream of a spice, a flowable stream of a sugar, a flowable stream of a milled dehydrated vegetable, a flowable stream of a milled dehydrated fruit, and a flowable stream of a milled dehydrated pepper.

13. The process of claim 11, wherein the RF microbial reduction device is configured to generate an RF frequency from about 20MHz to about 2450MHz.

14. The process of claim 11, wherein less than 10% of the flowable steam is denatured when the flowable stream of milled product is transported through a radio frequency (RF) microbial reduction device.

15. The process of claim 11, wherein the closed sanitary conveyance network is a network of duct and the flowable stream of milled product is transported in the closed sanitary network of duct via chilled sanitary forced air.

16. The process of claim 15, further comprising terminating the transport at a load-out device.

17. The process of claim 16, wherein the load-out device is at least one member of a group comprising: a consumer bagging device, a bulk bagging device, a bulk transportation vehicle, and a food processing device.

18. A sterile milled product produced according to the process of claim 11.

19. A process for microbial treatment of a milled grain product stream, the process comprising:

receiving a flowable stream of a milled grain product;

transporting the flowable stream of milled grain product to a moisture control device, wherein the moisture control device preconditions the flowable stream of milled grain product to have a generally uniform predetermined moisture content from about 12.5% to about 14.5% as the flowable stream of milled grain product passes through the moisture control device, wherein the generally uniform predetermined moisture content deviates less than about 0.5% throughout the stream, wherein at least a portion of the flowable stream has a microbial activity level;

after the flowable stream of milled grain product passes through the moisture control device, transporting, by a conveyance network, the flowable stream of milled grain product to a radio frequency (RF) microbial reduction device in-line with the conveyance network, wherein the RF microbial reduction device heats the flowable stream of milled grain product to a temperature from about 180°F to about 200°F as the flowable stream of milled grain product is conveyed through the RF microbial reduction device to cause a reduction in the microbial activity level of at least 3.0 log CFU/g and to cause less than 10% denaturation; and

after the flowable stream of milled grain product is conveyed through the RF microbial reduction device, conveying the flowable stream of milled grain product within the conveyance network by chilled forced air to cause a temperature reduction of the flowable stream of milled grain product to about ambient temperature.

20. A sterile milled product produced according to the process of claim 19.

21. A milled product stream comprising:

a first state, wherein when the milled product stream is in the first state the milled product stream comprises:

a supplemental moisture causing the milled product stream to have a generally uniform moisture content from about 12% to about 16% throughout the milled product stream,

at least a portion of the milled product stream including a microbial activity level, and

a natural functionality;

a second state, wherein when the milled product stream is in the second state the milled product stream comprises:

a reduction in the microbial activity level in relation to the first state of at least 3.0 log CFU/g,

less than 10% denaturation in relation to the natural functionality of the first state, and

a generally uniform moisture content from about 12% to about 16% throughout the milled product stream.

22. The milled product stream of claim 21, wherein the reduction in the microbial activity level is at least 4.0 log CFU/g.

23. The milled product stream of claim 21, wherein the reduction in the microbial activity level is at least 5.0 log CFU/g.

24. The milled product stream of claim 21, wherein the reduction in the microbial activity level is at least 6.0 log CFU/g.

25. The milled product stream of claim 21, wherein the reduction in the microbial activity level is at least 7.0 log CFU/g.

PATENT

IN THE UNITED STATES PATENT AND TRADEMARK OFFICE

| | | | |
|---|---|---|---|
| Applicant: | Weaver et al. | Examiner: | Not Yet Assigned |
| Serial No.: | 13/010,398 | Group Art Unit: | 1782 |
| Filed: | January 20, 2011 | Docket No.: | 15721.0734USU1 |
| Customer No.: | 96845 | Confirmation No.: | 2628 |
| Title: | MICROBIAL REDUCTION IN A PROCESSING STREAM OF A MILLED PRODUCT | | |

**Filed EFS-WEB**

**INFORMATION DISCLOSURE STATEMENT (37 C.F.R. § 1.97(b))**

Commissioner for Patents
P.O. Box 1450
Alexandria, Virginia 22313-1450

Dear Sir:

With regard to the above-identified application, the items of information listed on the enclosed Form 1449 are brought to the attention of the Examiner. At least some of the references were recently cited in an International Search Report mailed October 18, 2011.

This statement should be considered because it is submitted before the mailing date of a first Office Action on-the-merits. Accordingly, no fee is due for consideration of the items listed on the concurrently filed Form 1449.

In accordance with 37 C.F.R. §1.98(a)(2), a copy of each foreign patent and/or a copy of each publication, other than U.S. patents and U.S. patent application publications, listed on the accompanying Form 1449 are being filed concurrently herewith.

In view of the waiver of the requirements of 37 C.F.R. §1.98(a)(2)(iii), a copy of each cited pending unpublished U.S. patent application that is stored in the Patent Office's Image File Wrapper (IFW) system is not provided. See MPEP 609.04(a)(II); see also 1287 O.G. 163 (October 19, 2004) ("Waiver of the Copy Requirement in 37 C.F.R. §1.98 for Cited Pending U.S. Patent Applications").

No representation is made that a reference is "prior art" within the meaning of 35 U.S.C. §§ 102 and 103 and Applicants reserve the right, pursuant to 37 C.F.R. § 1.131 or otherwise, to

establish that the reference(s) are not "prior art." Moreover, Applicants do not represent that a reference has been thoroughly reviewed or that any relevance of any portion of a reference is intended.

Consideration of the items listed is respectfully requested. Pursuant to the provisions of M.P.E.P. 609, it is requested that the Examiner return a copy of the attached Form 1449, marked as being considered and initialed by the Examiner, to the undersigned with the next official communication.

Please further charge any fees required to enter this response, or credit any overpayment of fees, to Deposit Account No. 50-5270.

Respectfully submitted,
ADVENT IP, P.C., L.L.O.

/Ryan T. Grace/

RYAN T. GRACE
Registration No. 52,956
Direct Dial: 402-991-5780

ADVENT IP, P.C., L.L.O.
2425 South 144th Street
Suite 202
Omaha, NE 68144
402-502-1020

96845
PATENT TRADEMARK OFFICE

| FORM 1449* INFORMATION DISCLOSURE STATEMENT IN AN APPLICATION (Use several sheets if necessary) | Docket Number: 15721.0734USU1 | Application Number: 13/010,398 |
|---|---|---|
| | Applicant: Weaver et al. | |
| | Filing Date: 01/20/2011 | Group Art Unit: 1782 |

**U.S. PATENT DOCUMENTS**

| EXAMINER INITIAL | DOCUMENT NO. | DATE | NAME | CLASS | SUBCLASS | FILING DATE IF APPROPRIATE |
|---|---|---|---|---|---|---|
| | 2007/0212472 A1 | 09/13/2007 | HOLENSTEIN ET AL. | 426 | 634 | |
| | 2006/0013927 A1 | 01/19/2006 | GEVEKE ET AL. | 426 | 237 | |
| | 5,789,012 | 08/04/1998 | SLIMAK | 426 | 629 | |
| | 4,478,857 | 10/23/1984 | STAUSS | 426 | 72 | |
| | | | | | | |
| | | | | | | |
| | | | | | | |

**FOREIGN PATENT DOCUMENTS**

| | DOCUMENT NO. | DATE | COUNTRY | CLASS | SUBCLASS | TRANSLATION | |
|---|---|---|---|---|---|---|---|
| | | | | | | YES | NO |
| | EP 1 079 694 | 11/25/1999 | EP/PCT | A23B 9 | 02 | X | |
| | EP 0 512 259 | 11/11/1992 | EP | A23L 3 | 005 | X | |

**OTHER DOCUMENTS** (Including Author, Title, Date, Pertinent Pages, Etc.)

| | | |
|---|---|---|
| | | International Search Report and Written Opinion mailed October 18, 2011, in PCT/US2011/021896 (15721.0734WOU1) |

**96845**
PATENT TRADEMARK OFFICE

| EXAMINER | DATE CONSIDERED |
|---|---|

EXAMINER: Initial if reference considered, whether or not citation is in conformance with MPEP 609; draw line through citation if not in conformance and not considered. Include copy of this form for next communication to the Applicant.

(19) Europäisches Patentamt
European Patent Office
Office européen des brevets

(11) Veröffentlichungsnummer:
(11) Publication number:
(11) Numéro de publication:

1 079 694

Internationale Anmeldung veröffentlicht durch die Weltorganisation für geistiges Eigentum unter der Nummer:

**WO 99/59418** (art.158 des EPÜ).

International application published by the World Intellectual Property Organisation under number:

**WO 99/59418** (art.158 of the EPC).

Demande internationale publiée par l'Organisation Mondiale de la Propriété sous le numéro:

**WO 99/59418** (art.158 de la CBE).

**PCT** WORLD INTELLECTUAL PROPERTY ORGANIZATION
International Bureau

INTERNATIONAL APPLICATION PUBLISHED UNDER THE PATENT COOPERATION TREATY (PCT)

(51) International Patent Classification 6 : A23B 9/02 — A1

(11) International Publication Number: **WO 99/59418**

(43) International Publication Date: 25 November 1999 (25.11.99)

(21) International Application Number: PCT/US99/10748

(22) International Filing Date: 14 May 1999 (14.05.99)

(30) Priority Data:
09/081,380 19 May 1998 (19.05.98) US

(71) Applicant *(for all designated States except US)*: CARGILL INCORPORATED [US/US]; P.O. Box 9300, Minneapolis, MN 55440 (US).

(72) Inventors; and
(75) Inventors/Applicants *(for US only)*: DELRUE, Rita, M. [BE/US]; 11460 Fairfield Road 201, Minnetonka, MN 55345 (US). FISCHER, Phillip, Lawrence [US/US]; 13049 Fillmore Street, N.E., Minneapolis, MN 55434 (US). TINERI, Robert, M. [US/US]; 700 Tampa Drive, Greenville, MS 38701 (US).

(74) Agents: SAMPLES, Kenneth, H. et al.; Fitch, Even, Tabin & Flannery, Room 1600, 120 South LaSalle, Chicago, IL 60603 (US).

(81) Designated States: AE, AL, AM, AT, AU, AZ, BA, BB, BG, BR, BY, CA, CH, CN, CU, CZ, DE, DK, EE, ES, FI, GB, GD, GE, GH, GM, HR, HU, ID, IL, IN, IS, JP, KE, KG, KP, KR, KZ, LC, LK, LR, LS, LT, LU, LV, MD, MG, MK, MN, MW, MX, NO, NZ, PL, PT, RO, RU, SD, SE, SG, SI, SK, SL, TJ, TM, TR, TT, UA, UG, US, UZ, VN, YU, ZA, ZW, ARIPO patent (GH, GM, KE, LS, MW, SD, SL, SZ, UG, ZW), Eurasian patent (AM, AZ, BY, KG, KZ, MD, RU, TJ, TM), European patent (AT, BE, CH, CY, DE, DK, ES, FI, FR, GB, GR, IE, IT, LU, MC, NL, PT, SE), OAPI patent (BF, BJ, CF, CG, CI, CM, GA, GN, GW, ML, MR, NE, SN, TD, TG).

**Published**
*With international search report.*

(54) Title: METHOD FOR STERILISING CEREAL AND LEGUMINOUS PRODUCTS

(57) Abstract

A particulate food product is indirectly heated to at least about 170° after steam is directly injected onto the particulate food product to provide a moist environment and surface moisture on the particulate food product. The indirect heating is continued for a time and temperature to reduce the microbial contamination of the particulate cereal and/or legume products by an amount of at least log 2 without the loss of the functional properties.

*FOR THE PURPOSES OF INFORMATION ONLY*

Codes used to identify States party to the PCT on the front pages of pamphlets publishing international applications under the PCT.

| | | | | | | | |
|---|---|---|---|---|---|---|---|
| AL | Albania | ES | Spain | LS | Lesotho | SI | Slovenia |
| AM | Armenia | FI | Finland | LT | Lithuania | SK | Slovakia |
| AT | Austria | FR | France | LU | Luxembourg | SN | Senegal |
| AU | Australia | GA | Gabon | LV | Latvia | SZ | Swaziland |
| AZ | Azerbaijan | GB | United Kingdom | MC | Monaco | TD | Chad |
| BA | Bosnia and Herzegovina | GE | Georgia | MD | Republic of Moldova | TG | Togo |
| BB | Barbados | GH | Ghana | MG | Madagascar | TJ | Tajikistan |
| BE | Belgium | GN | Guinea | MK | The former Yugoslav Republic of Macedonia | TM | Turkmenistan |
| BF | Burkina Faso | GR | Greece | | | TR | Turkey |
| BG | Bulgaria | HU | Hungary | ML | Mali | TT | Trinidad and Tobago |
| BJ | Benin | IE | Ireland | MN | Mongolia | UA | Ukraine |
| BR | Brazil | IL | Israel | MR | Mauritania | UG | Uganda |
| BY | Belarus | IS | Iceland | MW | Malawi | US | United States of America |
| CA | Canada | IT | Italy | MX | Mexico | UZ | Uzbekistan |
| CF | Central African Republic | JP | Japan | NE | Niger | VN | Viet Nam |
| CG | Congo | KE | Kenya | NL | Netherlands | YU | Yugoslavia |
| CH | Switzerland | KG | Kyrgyzstan | NO | Norway | ZW | Zimbabwe |
| CI | Côte d'Ivoire | KP | Democratic People's Republic of Korea | NZ | New Zealand | | |
| CM | Cameroon | | | PL | Poland | | |
| CN | China | KR | Republic of Korea | PT | Portugal | | |
| CU | Cuba | KZ | Kazakstan | RO | Romania | | |
| CZ | Czech Republic | LC | Saint Lucia | RU | Russian Federation | | |
| DE | Germany | LI | Liechtenstein | SD | Sudan | | |
| DK | Denmark | LK | Sri Lanka | SE | Sweden | | |
| EE | Estonia | LR | Liberia | SG | Singapore | | |

# METHOD FOR STERILISING CEREAL AND LEGUMINOUS PRODUCTS

The present invention generally relates to a method to reduce the microbial level in particulate food products such as cereal products and legume products. More particularly, steam is directly injected onto the particulate food product to provide a moist environment and surface moisture on the particulate food product. After the particulate food has a surface moisture content it is indirectly heated for a time and temperature sufficient to reduce the microbial contamination of the particulate cereal and/or legume products without the loss of the functional properties of the food product.

## BACKGROUND OF THE INVENTION

There is considerable commercial interest in reducing the microbial content of cereal grains, flours and grits made therefrom as well as legumes and uncooked particulate products made from legumes. Lower initial microbial count would prolong shelf life and generally provide a more wholesome food. Almost any foods can certainly be sterilized through heat treatment. That is part of a cooking process. What is important, however, to this invention and to any discussion of reducing the microbial count of foods prior to use, is to reduce the microbial count prior to cooking without substantially adversely affecting the performance characteristics of the food being treated. Moreover, it is important that the process to reduce microbial count of the particulate food be continuous and not require increased pressure or pressurized vessels.

## SUMMARY OF THE INVENTION

The invention provides a continuous process or method of reducing the microbial level in a particulate food product. In one aspect, the invention provides a

method for reducing the microbial level in (1) a cereal product which has been milled into a flour, (2) a full particulate cereal grain such a kernels of corn, wheat, barley, malt and grains of rice, or (3) broken cereal particulates such as grits, broken corn kernels and broken rice grains. In another aspect, the invention provides a method for reducing the microbial level in legumes such as soy beans, grits and flours as well as and peas (outside the pods) or peanuts.

The method of the invention is unique in that it is continuous, does not require increased pressures with sealed containers and indirectly heats the particulate food product shortly after and/or during the injection of steam directly onto the food product to increase the moisture level of the surface of the food particles. Care should be taken not to expose the food particulates to moisture prior to its indirect heating because the moisture will hydrate the particulate food below the surface of the food particles and then the steam and indirect heat will tend to cook the food product and reduce its functionality. Care also should be taken to inject substantially just steam and not steam with oxygen or some other inert gas because oxygen or another gas will tend to reduce the moisture level of the surface of the particles. It is this surface moisture coupled with indirect heating, however, which is important to reducing the microbial content of the food product without substantially adversely affecting the functionality of the food product. The method of the invention will reduce the microbial count of the particulate food by at least log 2, and in an important aspect by at least log 4. Indeed in many cases, the invention permits the reduction of a microbial count to levels which are currently undetectable. Moreover, the method of the invention is practiced without the necessity of pressurizing the heating vessel to pressures substantially above one atmosphere or atmospheric conditions.

The method includes continuously conveying the particulate food product through an elongated conduit without pressurizing the conduit. As the particulate product goes through the conduit, it has steam directly injected onto it and is indirectly heated. The important function of the steam is to provide an amount of surface moisture on the food particles which with the indirect heat will kill bacteria on the food. Just indirect heat without steam will not provide a sufficiently lethal atmosphere for the bacteria without having too much heat, such that the functionality of the food will be adversely affected. Conversely, just using steam to provide heat will merely "steam cook" the food. The heat source for the indirect heat coupled with the steam injection should have a temperature which is effective for indirectly heating the particulate food product to a temperature of at least about 170°F. The heat source should not heat the food through substantial direct contact with the food particles, but indirectly heat the particulate food such as by convection from the heat source to the particles. In an important aspect the conduit should have a heat source which is a jacket which substantially surrounds the conduit throughout its length where the jacket is heated such as by steam, oil, electrically or any other suitable means for heating. In another important aspect, the indirect heat source should have a temperature of from about 212°F to about 370°F. The temperature of the heat source and time of exposure of the particulate food product to the heat source is a function of the sensitivity of the food to heating such that it does not lose any substantial functionality. The combination of the temperature of the heat source, steam injection, surface moisture and time of exposure of the particulate food to the indirect heat source, however, should be effective to heat the particulate food to at least 170°F and reduce the microbial count the particulate food product being conveyed through the

conduit by at least about log 2 when the particulate food is mixed and has steam injected to it as described below.

As the particulate food product is being conveyed through the elongated conduit and just after the injection of the steam or during the injection of steam into the particulate food product, the food product is indirectly heated. The steam injection is to raise the moisture level of the surface of the food particulates as they are conveyed through the conduit and being exposed to indirect heat. The steam is injected into the conduit in an amount which is effective for providing an atmosphere in the conduit with a relative humidity of at least about 80%. In an important aspect the steam is provided in an amount where the atmosphere in the conduit has a relative humidity of from about 80 to about 100%. The steam should have a temperature of at least 212°F, and in an important aspect, it is superheated to a temperature of from about 230°F to about 330°F. The temperature of the steam should not exceed 370°F because the steam may then reduce the functionality of the food product. Generally, if more than 5 weight percent of the starch in the particulate product is gelatinized, the functional properties of the product likely will be adversely affected. In the case of malt, not more than 5 percent of the enzyme activity should be adversely affected after the process of the invention. In the case of soy beans or products made therefrom, the protein dispersibility index should not be reduced more than about 5%. In the case of soybeans, the invention also may be used to deactivate some enzymes.

While the particulate food product is (1) being conveyed through the conduit, (2) is being directly exposed to steam and (3) is being exposed to the indirect heat, the particulate food product is mixed at a rate to insure that as many particles as possible are (a) heated to 170°F and (b) have their surface moisture increased such that after exit from the conduit the microbial count of the particulate food product is reduced by at least

log 2 without substantially affecting the functionality of the food product. In the invention, it is important that the food product not be substantially hydrated below its surface such that it will be "cooked" and have its functionality impaired. The indirect heat, the steam, the surface moisture on the particles and the time of exposure of the particulate food to the indirect heat and steam are all related such that they are effective to reduce the microbial content of the particulate food at least about log 2, and in an important aspect about log 4.

**DESCRIPTION OF THE DRAWING**

Figure 1 is a schematic diagram of an apparatus which may be used to practice the invention.

**DETAILED DESCRIPTION OF THE INVENTION**

The to-be-treated product is fed into a elongated heating device 4 which is shown in figure 1. The particulate food product is fed into the heating device from hopper 6 through feed aperture 8 into channel 10. The particulate product is conveyed down channel 10 in the y direction. Channel 10 is surrounded by a steam jacket 12 through which steam is circulated. A hollow rod 14 extends longitudinally down the center of the channel. A plurality of paddles 16 are mounted on the rod 14 down its longitudinal length. The rod 14 is rotated and the paddles are angled such that as the rod rotates the paddles mix the particulate food product and push the product down channel 10. The paddles have openings 18 which from channels which extend through the paddles to the hollow center of rod 14. These openings are to transmit steam going through the rod and paddles so that the steam may be injected into the particulate food product being transmitted down channel 10. As the rod rotates the paddles push product down the conduit to exit aperture 20 through which treated particulate food product drops. The openings in the paddles may be opened or closed to control steam injection into the product

being transmitted down the channel. In one aspect of the invention, some of the openings in the paddles towards the feed input end of the channel are open to transmit steam from the hollow rotating rod 14 into the particulate food product. Steam can be supplied through the rod and as such through the paddles into the to-be-treated particulate product. The amount of steam injected is effective for providing a moist environment having a relative humidity of at least 80% and also heats the product. Additional indirect heating of the particulate food is done by using indirect heat from the jacket of the device. Just enough steam is injected to provide moisture on the surface of the to be treated particles. With the moisture and heat from the steam and the indirect heat from the heat jacket heat source of the device, the conditions are sufficient to kill micro-organisms at the surface of the particulate food without substantially reducing the functionality of the food. The higher moisture content, the heat and the time of exposure of the food to the heat must be limited to prevent that the functional properties of the to-be-treated product is negatively influenced. A device which can be used to treat the particulate food as described herein is available as a Solidaire Model SJCS 8-4 from the Hosokawa Bepex Corporation, 333 N.E. Taft Street, Minneapolis, Minnesota 55413.

The rotating paddles as vehicles for injecting steam, assure that the steam is uniformly distributed over the surfaces of the food product particles, but not into the particulate food. By choosing a specific length for the device, the indirect heating time of the product can be varied. It is important that the steam is injected at about the beginning of indirect heating in the device and that the rest of the time that the product is exposed to the indirect heat is used to kill the micro-organisms present and thereafter dry the product. It is important that there is sufficient mixing of the particulate product during the treatment that the

surfaces of the food product are moist and achieve a temperature of at least about 170°F. The particulate product should not be exposed to indirect heating for more than about 3 minutes before cooking might take place and an adverse affect to the product. In an important aspect of the invention the product is not exposed to indirect heating for more than about 90 seconds, with about 60 seconds as a maximum being preferred.

The product after the steam and heat treatment can be cooled and dried (if necessary) using conventional techniques. Thereafter the product is packaged and may be packaged under aseptic conditions to keep the product from being recontaminated with micro-organisms.

Cereals, such as barley, malted barley, wheat, rye, rice can be treated but also a processed product from them, such as grits, meal, flour, brokens. In the conduit system described above with a conduit length of about seven feet, rice brokens and rice flour were heated to 180°F for 54 to 60 seconds and conveyed through the conduit at a rate of from 200 to 1500 pounds of particulate food per hour with two paddles injecting steam. In this treatment, a reduction of the micro-organism count of at least about log 2 was obtained. In the conduit systems described above, with a conduit length of about seven feet, malt was heated to about 180°F for 15 seconds at a rate of about 960 pounds per hour with three paddles open (rotating at 400 rpm). In this malt treatment, a reduction of the micro-organism count of at least about log 4 was obtained.

After the treatment, the product can be used as such for food applications or further processed, such as milling, breaking, sifting to obtain a specific granulation. The heat treatment as claimed above will provide a food-safe product related to microbial contaminations.

The following examples illustrate methods for carrying out the invention and should be understood to be illustrative of, but not limiting upon, the scope of the invention which is defined in the appended claims.

## EXAMPLES

**Example I**: Treatment of Malt

A Solidaire Model SJCS 8-4 is used to treat malt at a rate of 960 pounds per hour using three paddles open for the injection of steam into the malt as it was being put into the conduit. The paddles were rotated at 400 rpm. with the time of exposure of the particulate food in the conduit varying from 10 to 15 seconds. Three runs were made where run 1 provided an exit product temperature of 194°F, had a jacket temperature of 222°F and a steam temperature of 301°F, run 2 provided an exit product temperature of 194°F, had a jacket temperate of 280°F and a steam temperature of 268°F, and run 3 provided an exit product temperature of 206°F, had a jacket temperate of 280°F and a steam temperature of 275°F. The conditions for the three runs, the control and the reduction in microbial count are summarized in the Table I below.

TABLE I

| 3 Control Samples of Food Malt | | |
|---|---|---|
| | Log | Log |
| | TPC/gr. | coliform MPN/gr. |
| A | 6.4 | 5.5 |
| B | 6.2 | 5.56 |
| C | 6.25 | 5.38 |

| 3 Treatments Food Malt | | | | | | |
|---|---|---|---|---|---|---|
| | Log TPC/gr. | Log coli | Exit Product Temp. (°F) | Est. Retention Time (sec) | Jacket Temp. (°F) | Steam Temp. (°F) |
| 1 | 4.4 | 3.38 | 194 | 50.15 | 222 | 301 |
| 2 | 4.17 | 2.81 | 194 | 50.15 | 280 | 268 |
| 3 | 4.22 | 2.87 | 206 | 50.15 | 280 | 285 |

**Example II**:

Treatment of Rice Brokens

A Solidaire Model SJCS 8-4 is used to treat rice brokens at a rate shown below using one or two paddles open for the injection of steam into the rice brokens as it was being put into the conduit. The paddles were rotated with the time of exposure of the particulate food in the conduit as shown in Table II below.

TABLE II

| Sample | TPC/g Log | Colif/g Log | Temperature °F | | | Approx. Retention Time |
|---|---|---|---|---|---|---|
| | | | Prod. Exit Temp. | Jacket Temp. | Direct Steam Temp. | |
| 1 | 1.45 | 0.7 | 216 | 347 | 228 | 54 sec |
| 2 | 1.82 | 0.7 | 208 | 347 | 229 | 54 sec |
| 3 | 1.48 | 0.7 | 207.5 | 350 | 229 | 54 sec |
| 4 | 1.86 | 0.7 | 206.2 | 350 | 229 | 54 sec |
| 5 | 1.68 | 0.7 | 207 | 346 | 229 | 54 sec |
| 6 | 1.71 | 0.7 | 206.5 | 346 | 220 | 54 sec |
| Control 1 | 5.19 | 4.05 | | | | |
| Control 2 | 4.92 | 3.55 | | | | |
| Control 3 | 4.44 | 2.95 | | | | |
| Control 4 | 4.99 | 4.29 | | | | |
| Control 5 | 5.58 | 4.27 | | | | |

**Example III**: Treatment of Rice Flour

A Solidaire Model SJCS 8-4 is used to treat rice flour under the conditions described in Table III below.

TABLE III

| Time | 11.35 | 12.00 | 12.20 | 12.30 | 12.45 | 1.00 | blanc |
|---|---|---|---|---|---|---|---|
| Lb./Hr. | 1160 | 1160 | 1160 | 1160 | 1160 | 1160 | |
| # Paddles open to steam | 3 | 3 | 3 | 3 | 3 | 3 | |
| RPM Rotor | 600 | 600 | 600 | 600 | 600 | 600 | |
| Steam Jacket Temp (°F) | 254 | 254 | 254 | 254 | 254 | 254 | |
| Direct Steam Temp. (°F) | 250 | 270 | 265 | 264 | 264 | 263 | |
| PSI | 14 | 24 | 24 | 24 | 24 | 24 | |
| H2O Cooking | 11.62 | 13 | | 13.9 | 13.5 | 12.27 | |
| H2O Cooling | 11.31 | 12.28 | | 12.6 | 12.45 | 11.63 | 10.92 |
| # Code | | 1 | | 2 | | 3 | |
| Prod. Temp. | | 185 | 192 | 195 | 192 | 190 | |
| St. Dama | | 5.1 | | 3.9 | | 4.6 | |
| RVA 35% | | | | | | | |
| 1 Minute | | 347 | | 322 | | 337 | 328 |
| 10 Minute | | 312 | | 305 | | 312 | 272 |
| 12.5 Minute | | 275 | | 294 | | 290 | 260 |

| Time | 1.30 | 1.55 | 2.15 | 2.25 | 2.40 | 2.55 | blanc 2 |
|---|---|---|---|---|---|---|---|
| Lb./Hr. | 1160 | 1160 | 1160 | 1160 | 1160 | 1160 | |
| # Paddles open to steam | 3 | 3 | 3 | 3 | 3 | 3 | |
| RPM Rotor | 600 | 600 | 600 | 600 | 600 | 600 | |
| Steam Jacket | 254 | 254 | 254 | 254 | 254 | 254 | |
| Direct Steam | 250 | 250 | 250 | 250 | 250 | 250 | |
| PSI | 24 | 24 | 24 | 22 | 22 | 22 | |
| H2O Cooking | 13.7 | 13.7 | | 14.5 | 12.35 | 13.1 | |
| H2O Cooling | 12.4 | 12.4 | 12.9 | | | 12.6 | 9.92 |
| # Code | 4 | 5 | 6 | | | 7 | |
| Prod. Temp. | 195 | 199 | 199 | 199 | 200 | 208 | |
| St. Dam. | 3.6 | 3.9 | 5.1 | | | 3.08 | |
| RVA 35% | | | | | | | |

| Time | 1.30 | 1.55 | 2.15 | 2.25 | 2.40 | 2.55 | blanc 2 |
|---|---|---|---|---|---|---|---|
| 1 Minute | 328 | 328 | 327 | | | 321 | 376 |
| 10 Minute | 306 | 301 | 302 | | | 302 | 312 |
| 12.5 Minute | 282 | 293 | 292 | | | 290 | 294 |

| Time | 3.15 | 3.30 | 3.45 | 4.10pm | 4.25 | 4.30 | blanc |
|---|---|---|---|---|---|---|---|
| Lb./Hr. | 1160 | 1160 | 1160 | 1740-1800 | 2000 | 2000 | |
| # Paddles Open to Steam | 3 | 3 | 3 | 3 | 3 | 3 | |
| RPM Rotor | 600 | 600 | 600 | 600 | 600 | 600 | |
| Steam Jacket Temp. °F | 254 | 254 | 254 | 254 | 254 | 254 | |
| Direct Steam Temp. °F | 256 | 256 | 256 | 261 | 270 | | |
| PSI | | 20.5 | 20 | 22 | 24 | | |
| H2O Cooking | 13.22 | 13.25 | 12.77 | 12.38 | 12.69 | | |
| H2O Cooling | 12.6 | 12.6 | 12.46 | 11.63 | 11.4 | | 11.39 |
| # Code | 8 | 9 | 10 | 11 | 12 | 13 | |
| Prod. Temp. | 200.3 | 203.5 | 205.5 | 187.7 | 175 | 182 | |
| St. Dam. | | | 5.7 | | 4.2 | | |
| RVA 35% | | | | | | | |
| 5 Minute | 337 | 276 | 311 | 350 | 350 | | 339 |
| 10 Min. | 310 | 259 | 288 | 302 | 279 | | 285 |
| 12.5 Min | 305 | 253 | 282 | 291 | 295 | | 265 |

| Sample (3/9/98) | TPC (cfu/g) | TPC (log cfu/g) | geom mean | Coliform | log cfu/g | geom mean |
|---|---|---|---|---|---|---|
| Control A-a | 6.7E+04 | 4.83 | 4.84 | 4.4E+03 | 3.64 | 3.70 |
| Control A-b | 7.2E+04 | 4.86 | | 5.8E+03 | 3.76 | |
| | | | | | | |
| Control B-a | 5.5E+04 | 4.74 | 4.76 | 6.9E+03 | 3.84 | 3.83 |
| Control B-b | 6.0E+04 | 4.78 | | 6.5E+03 | 3.81 | |
| | | | | | | |
| Control C-a | 3.1E+04 | 4.49 | 4.62 | 5.1E+03 | 3.71 | 3.75 |
| Control C-b | 5.5E+04 | 4.74 | | 6.2E+03 | 3.79 | |
| | | | | | | |
| Control D-a | 3.2E+04 | 4.51 | 4.40 | 1.6E+03 | 3.20 | 3.40 |
| Control D-b | 2.0E+04 | 4.30 | | 3.9E+03 | 3.59 | |

| Sample (3/9/98) | TPC (cfu/g) | TPC (log cfu/g) | geom mean | Coliform | log cfu/g | geom mean |
|---|---|---|---|---|---|---|
| | | | | | | |
| Control E-a | 1.7E+04 | 4.23 | 4.19 | 1.3E+03 | 3.11 | 3.21 |
| Control E-b | 1.4E+04 | 4.15 | | 2.0E+03 | 3.30 | |
| | | | | | | |
| Flour 1Aa | 2.5E+02 | 2.40 | 2.06 | 5.0E+00 | 0.70 | 0.70 |
| Flour 1Ab | 2.0E+02 | 2.30 | | 5.0E+00 | 0.70 | |
| Flour 1Ba | 6.0E+01 | 1.78 | | 5.0E+00 | 0.70 | |
| Flour 1Bb | 6.0E+01 | 1.78 | | 5.0E+00 | 0.70 | |
| | | | | | | |
| Flour 2Aa | 3.1E+02 | 2.49 | 2.16 | 5.0E+00 | 0.70 | 0.70 |
| Flour 2Ab | 2.5E+02 | 2.40 | | 5.0E+00 | 0.70 | |
| Flour 2Ba | 9.0E+01 | 1.95 | | 5.0E+00 | 0.70 | |
| Flour 2Bb | 6.0E+01 | 1.78 | | 5.0E+00 | 0.70 | |
| | | | | | | |
| 3Aa | 9.0E+01 | 1.95 | 2.07 | 5.0E+00 | 0.70 | 0.70 |
| 3Ab | 1.3E+02 | 2.11 | | 5.0E+00 | 0.70 | |
| 3Ba | 1.5E+02 | 2.18 | | 5.0E+00 | 0.70 | |
| 3Bb | 1.1E+02 | 2.04 | | 5.0E+00 | 0.70 | |
| | | | | | | |
| 4Aa | 5.0E+01 | 1.70 | 1.70 | 5.0E+00 | 0.70 | 0.70 |
| 4Ab | 6.0E+01 | 1.78 | | 5.0E+00 | 0.70 | |
| 4Ba | 3.0E+01 | 1.48 | | 5.0E+00 | 0.70 | |
| 4Bb | 7.0E+01 | 1.85 | | 5.0E+00 | 0.70 | |
| | | | | | | |
| 5Aa | 1.4E+02 | 2.15 | 1.90 | 5.0E+00 | 0.70 | 0.70 |
| 5Ab | 8.0E+01 | 1.90 | | 5.0E+00 | 0.70 | |
| 5Ba | 7.0E+01 | 1.85 | | 5.0E+00 | 0.70 | |
| 5Bb | 5.0E+01 | 1.70 | | 5.0E+00 | 0.70 | |
| | | | | | | |
| 6Aa | 7.0E+01 | 1.85 | 1.90 | 5.0E+00 | 0.70 | 0.70 |
| 6Ab | 4.0E+01 | 1.60 | | 5.0E+00 | 0.70 | |
| 6Ba | 1.0E+02 | 2.00 | | 5.0E+00 | 0.70 | |
| 6Bb | 1.4E+02 | 2.15 | | 5.0E+00 | 0.70 | |
| | | | | | | |

| Sample (3/9/98) | TPC (cfu/g) | TPC (log cfu/g) | geom mean | Coliform | log cfu/g | geom mean |
|---|---|---|---|---|---|---|
| 7Aa | 7.0E+01 | 1.85 | 1.75 | 5.0E+00 | 0.70 | 0.70 |
| 7Ab | 2.0E+02 | 2.30 | | 5.0E+00 | 0.70 | |
| 7Ba | 7.0E+01 | 1.85 | | 5.0E+00 | 0.70 | |
| 7Bb | 1.0E+01 | 1.00 | | 5.0E+00 | 0.70 | |
| | | | | | | |
| 8Aa | 9.0E+01 | 1.95 | 1.89 | 5.0E+00 | 0.70 | 0.70 |
| 8Ab | 1.0E+02 | 2.00 | | 5.0E+00 | 0.70 | |
| 8Ba | 8.0E+01 | 1.90 | | 5.0E+00 | 0.70 | |
| 8Bb | 5.0E+01 | 1.70 | | 5.0E+00 | 0.70 | |
| | | | | | | |
| 9Aa | 1.0E+02 | 2.00 | 1.96 | 5.0E+00 | 0.70 | 0.70 |
| 9Ab | 5.0E+01 | 1.70 | | 5.0E+00 | 0.70 | |
| 9Ba | 1.1E+02 | 2.04 | | 5.0E+00 | 0.70 | |
| 9Bb | 1.3E+02 | 2.11 | | 5.0E+00 | 0.70 | |
| | | | | | | |
| 10Aa | 9.0E+01 | 1.95 | 2.44 | 5.0E+00 | 0.70 | 0.70 |
| 10Ab | 1.2E+02 | 2.08 | | 5.0E+00 | 0.70 | |
| 10Ba | 7.4E+02 | 2.87 | | 5.0E+00 | 0.70 | |
| 10Bb | 7.3E+02 | 2.86 | | 5.0E+00 | 0.70 | |
| | | | | | | |
| 11Aa | 1.5E+03 | 3.18 | 2.97 | 1.0E+01 | 1.00 | 0.85 |
| 11Ab | 1.8E+03 | 3.26 | | 1.0E+01 | 1.00 | |
| 11Ba | 5.0E+02 | 2.70 | | 5.0E+00 | 0.70 | |
| 11Bb | 5.8E+02 | 2.76 | | 5.0E+00 | 0.70 | |
| | | | | | | |
| 12Aa | 5.7E+03 | 3.76 | 3.57 | 1.2E+02 | 2.08 | 1.77 |
| 12Ab | 5.4E+03 | 3.73 | | 3.0E+01 | 1.48 | |
| 12Ba | 2.6E+03 | 3.41 | | 8.0E+01 | 1.90 | |
| 12Bb | 2.4E+03 | 3.38 | | 4.0E+01 | 1.60 | |
| | | | | | | |
| 13Aa | 1.0E+03 | 3.00 | 3.44 | 2.0E+01 | 1.30 | 1.96 |
| 13Ab | 1.1E+03 | 3.04 | | 5.0E+01 | 1.70 | |
| 13Ba | 7.6E+03 | 3.88 | | 2.8+02 | 2.45 | |
| 13Bb | 7.0E+03 | 3.85 | | 2.4E+02 | 2.38 | |

Numerous modifications and variations in practice of the invention are expected to occur to those skilled in the art upon consideration of the foregoing detailed description of the invention. Consequently, such modifications and variations are intended to be included within the scope of the following claims.

WHAT IS CLAIMED IS:

1. A continuous process for reducing the microbial level in a particulate cereal or legume food product, the method comprising:

conveying the particulate food product through a conduit, the conduit having a temperature which is effective for indirectly heating the particulate food product to a temperature of at least about 170°F, the particulate food product being conveyed through the conduit at a rate which is effective for heating the particulate food product to a temperature of at least about 170°F as the particulate food product exits the conduit;

injecting steam into the particulate food product as it is being conveyed through the conduit to provide a moisture content on the surface of the particles of food product, the steam being injected in an amount which is effective for providing an atmosphere in the conduit with a relative humidity of at least about 80%;

mixing the particulate food product as it is being exposed to the indirect heat, while the particulate food product is being conveyed through the conduit and while the steam is being injected into the particulate food product, the mixing being at a rate which is effective to increase the temperature of substantially of all of the particulate food product to at least 170°F and the mixing being at a rate which is effective to increase the surface moisture of the particles of food,

the indirect heat, the steam, the surface moisture on the particles and the particles having a time of exposure to the indirect heat and steam all of which are effective to reduce the microbial content of the particulate food at least about log 2, but not substantially adversely affect the functionality of the food.

2. A process as recited in claim 1 wherein the conduit has an indirect heat source which has a temperature of from about 212°F to about 370°F.

3. A process as recited in claim 1 wherein the steam has a temperature of from about 212°F to about 370°F.

4. A process as recited in claim 1 wherein the steam is injected into the conduit in an amount which is effective to provide a relative humidity of from about 80% to about 100%.

5. A process as recited in claim 1 wherein the conduit has an indirect heat source which has a temperature of from about 212°F to about 370°F., the steam has a temperature of from about 212°F to about 370°F., and the steam is injected into the conduit in an amount which is effective to provide a relative humidity of from about 80% to about 100%.

6. A process as recited in claim 1 wherein the indirect heating and the steam is injected into the conduit without raising the pressure in the conduit substantially above atmospheric conditions.

7. A process as recited in claim 5 wherein the indirect heating and the steam is injected into the conduit without raising the pressure in the conduit substantially above atmospheric conditions.

8. A process as recited in claim 1 wherein the steam is injected into the conduit without mixing the steam with any other gas.

9. A process as recited in claim 5 wherein the steam is injected into the conduit without mixing the steam with any other gas.

10. A process as recited in claim 1 wherein the steam is injected prior to or during the indirect heating of the particulate food product.

11. A process as recited in claim 5 wherein the steam is injected prior to or during the indirect heating of the particulate food product.

12. A process as recited in claim 1 wherein not more than 5 weight percent of starch in the food product is gelatinized during the method of the invention.

13. A process as recited in claim 5 wherein not more than 5 weight percent of starch in the food product is gelatinized during the method of the invention.

14. A process as recited in claim 1 wherein the particulate food product is selected from the group consisting of a cereal grain, grain brokens, a milled cereal product and mixtures thereof.

15. A process as recited in claim 5 wherein the particulate food product is selected from the group consisting of a cereal grain, grain brokens, a milled cereal product and mixtures thereof.

16. A process as recited in claim 4 wherein the particulate food product is selected from the group consisting of rice, rice brokens, rice flour and mixtures thereof.

17. A process as recited in claim 13 wherein the particulate food product is selected from the group consisting of rice, rice brokens, rice flour and mixtures thereof.

18. A process as recited in claim 14 wherein the particulate food product is malt and enzyme activity of the malt is not reduced more than about 5%.

19. A process as recited in claim 14 wherein the particulate food product is indirectly heated for not more than about 90 seconds.

20. A process as recited in claim 5 wherein the particulate food product is aseptically packaged.

21. A process as recited in claim 1 wherein the particulate food product is soy flour and products derived from soybeans and a protein dispersibility index of the particulate food product is not reduced more than about 5%.

22. A continuous process for reducing the microbial level in a particulate cereal or legume food product, the method comprising:

conveying the particulate food product through a conduit, the conduit having a temperature which is effective for indirectly heating the particulate food product to a temperature of at least about 170°F, the particulate food product being conveyed through the conduit at a rate which is effective for heating the particulate food product to a temperature of at least about 170°F as the particulate food product exits the conduit;

injecting steam into the particulate food product in an amount effective for raising the surface moisture content of the particulate food just prior to or

during indirect heating, the steam being injected in an amount which is effective for providing an atmosphere in the conduit with a relative humidity of at least about 80% to about 100% without increasing pressure in the conduit substantially above atmospheric conditions;

mixing the particulate food product as it is being exposed to the indirect heat, while the particulate food product is being conveyed through the conduit and while the steam is being injected into the particulate food product, the mixing being at a rate which is effective to increase the temperature of substantially of all of the particulate food product to at least 170°F and the mixing being at a rate which is effective to increase the surface moisture of the particles of food,

the indirect heat, the steam, the surface moisture on the particles and the particles having a time of exposure to the indirect heat and steam all of which are effective to reduce the microbial content of the particulate food at least about log 2.

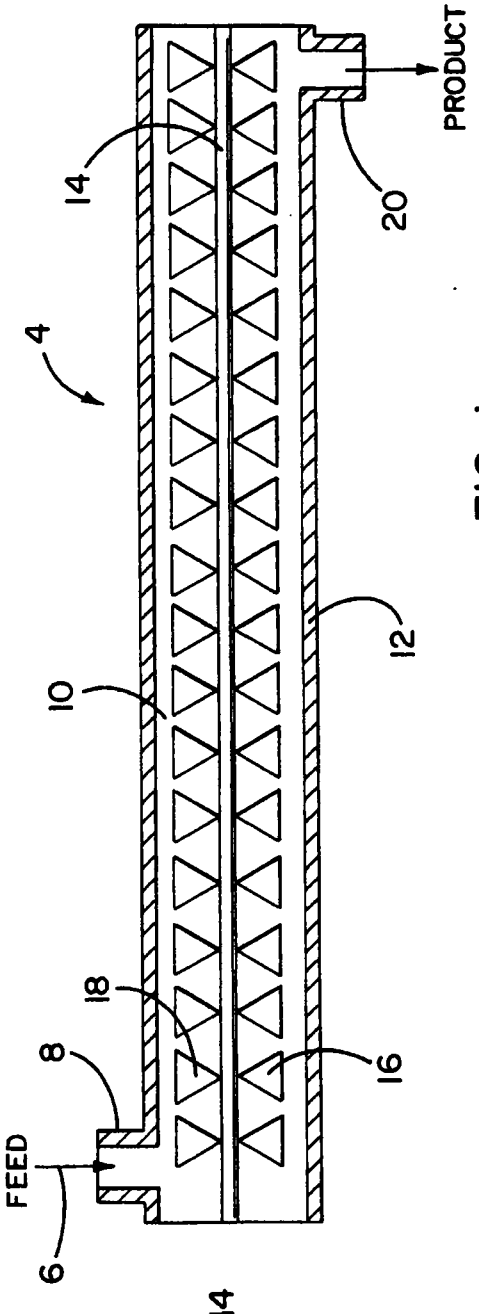


FIG. 1

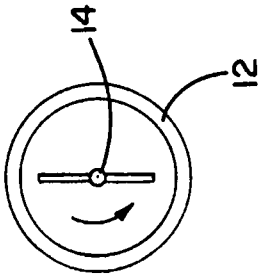


FIG. 2

# INTERNATIONAL SEARCH REPORT

International .cation No
PCT/US 99/10748

A. CLASSIFICATION OF SUBJECT MATTER
IPC 6 A23B9/02

According to International Patent Classification (IPC) or to both national classification and IPC

B. FIELDS SEARCHED

Minimum documentation searched (classification system followed by classification symbols)
IPC 6 A23B

Documentation searched other than minimum documentation to the extent that such documents are included in the fields searched

Electronic data base consulted during the international search (name of data base and, where practical, search terms used)

C. DOCUMENTS CONSIDERED TO BE RELEVANT

| Category ° | Citation of document, with indication, where appropriate, of the relevant passages | Relevant to claim No. |
|---|---|---|
| X | US 1 750 508 A (J.W. CORNELIUS)<br>11 March 1930 (1930-03-11)<br>page 2, line 29 - line 32<br>page 1, line 11 - line 17<br>page 3, line 32 - line 65; claims<br>--- | 1,6-8,<br>10,14,<br>19,22 |
| X | EP 0 556 101 A (MCCORMICK & CO INC)<br>18 August 1993 (1993-08-18)<br>column 7, line 50 - column 8, line 47;<br>claims 1,7<br>column 2, line 11 - line 18<br>column 6, line 48 - line 55<br>column 13, line 45 - column 14, line 30<br>--- | 1-11,14,<br>19,20,22 |
| X | EP 0 269 257 A (MCCORMICK & CO INC)<br>1 June 1988 (1988-06-01)<br>the whole document<br>---<br>-/-- | 1,5,20 |

[X] Further documents are listed in the continuation of box C. [X] Patent family members are listed in annex.

° Special categories of cited documents :

"A" document defining the general state of the art which is not considered to be of particular relevance

"E" earlier document but published on or after the international filing date

"L" document which may throw doubts on priority claim(s) or which is cited to establish the publication date of another citation or other special reason (as specified)

"O" document referring to an oral disclosure, use, exhibition or other means

"P" document published prior to the international filing date but later than the priority date claimed

"T" later document published after the international filing date or priority date and not in conflict with the application but cited to understand the principle or theory underlying the invention

"X" document of particular relevance; the claimed invention cannot be considered novel or cannot be considered to involve an inventive step when the document is taken alone

"Y" document of particular relevance; the claimed invention cannot be considered to involve an inventive step when the document is combined with one or more other such documents, such combination being obvious to a person skilled in the art.

"&" document member of the same patent family

| Date of the actual completion of the international search | Date of mailing of the international search report |
|---|---|
| 11 August 1999 | 24/08/1999 |

| Name and mailing address of the ISA | Authorized officer |
|---|---|
| European Patent Office, P.B. 5818 Patentlaan 2<br>NL - 2280 HV Rijswijk<br>Tel. (+31-70) 340-2040, Tx. 31 651 epo nl,<br>Fax: (+31-70) 340-3016 | Guyon, R |

1

Form PCT/ISA/210 (second sheet) (July 1992)

# INTERNATIONAL SEARCH REPORT

International ...lication No
PCT/US 99/10748

C.(Continuation) DOCUMENTS CONSIDERED TO BE RELEVANT

| Category | Citation of document, with indication where appropriate, of the relevant passages | Relevant to claim No. |
|---|---|---|
| X | EP 0 196 464 A (KIKKOMAN CORP)<br>8 October 1986 (1986-10-08)<br><br>column 6, line 1 - line 33; claims 1-4,7; figures; examples 6,1-3,5,7; table 3<br>column 5, line 37 - line 46 | 1-11,<br>14-16,<br>19,22 |
| X | EP 0 094 448 A (KIKKOMAN CORP)<br>23 November 1983 (1983-11-23)<br><br>the whole document | 1-11,<br>14-17,<br>19,21,22 |
| X | US 2 801 176 A (ATAULLAH K.)<br>30 July 1957 (1957-07-30)<br>page 6, line 71 - page 7, line 32; figure 2 | 1,5,12,<br>13 |
| X | DE 33 44 214 A (MUELLER S MUEHLE)<br>20 June 1985 (1985-06-20)<br>the whole document | 1,4,5 |
| A | DE 820 840 C (G. WATTS ET AL.)<br>12 November 1951 (1951-11-12)<br>the whole document | 1 |
| A | DE 207 724 C (G. ERLWEIN)<br>24 August 1906 (1906-08-24)<br>the whole document | 1 |
| A | GB 2 221 830 A (D. H. DUDEK)<br>21 February 1990 (1990-02-21)<br>the whole document | 1 |

1

# INTERNATIONAL SEARCH REPORT

Inform. .1 on patent family members

International ication No
PCT/US 99/10748

| Patent document cited in search report | Publication date | Patent family member(s) | Publication date |
|---|---|---|---|
| US 1750508 A | 11-03-1930 | NONE | |
| EP 0556101 A | 18-08-1993 | AU 3188693 A | 12-08-1993 |
| | | BR 9300502 A | 10-08-1993 |
| | | CA 2088523 A | 08-08-1993 |
| | | CN 1082847 A | 02-03-1994 |
| | | EG 19813 A | 29-02-1996 |
| | | JP 6007078 A | 18-01-1994 |
| | | MX 9300632 A | 29-07-1994 |
| | | ZA 9300655 A | 02-09-1993 |
| EP 0269257 A | 01-06-1988 | US 4844933 A | 04-07-1989 |
| | | AT 71806 T | 15-02-1992 |
| | | AU 614067 B | 22-08-1991 |
| | | AU 8050187 A | 05-05-1988 |
| | | CA 1326786 A | 08-02-1994 |
| | | CN 1027344 B | 11-01-1995 |
| | | CN 1039529 A,B | 14-02-1990 |
| | | DE 3776289 A | 05-03-1992 |
| | | EG 18217 A | 30-11-1992 |
| | | GR 3003814 T | 16-03-1993 |
| | | IN 172058 A | 27-03-1993 |
| | | IN 169801 A | 28-12-1991 |
| | | JP 6014858 B | 02-03-1994 |
| | | JP 63129974 A | 02-06-1988 |
| | | US 4967651 A | 06-11-1990 |
| | | ZA 8708048 A | 25-04-1988 |
| EP 0196464 A | 08-10-1986 | JP 1794927 C | 28-10-1993 |
| | | JP 5000053 B | 05-01-1993 |
| | | JP 61199819 A | 04-09-1986 |
| | | US 4709487 A | 01-12-1987 |
| EP 0094448 A | 23-11-1983 | NONE | |
| US 2801176 A | 30-07-1957 | NONE | |
| DE 3344214 A | 20-06-1985 | NONE | |
| DE 820840 C | | NONE | |
| DE 207724 C | | NONE | |
| GB 2221830 A | 21-02-1990 | AT 141465 T | 15-09-1996 |
| | | AU 613515 B | 01-08-1991 |
| | | AU 4056589 A | 19-02-1990 |
| | | CA 1339928 A | 30-06-1998 |
| | | CN 1041003 A,B | 04-04-1990 |
| | | DE 68926998 D | 26-09-1996 |
| | | DE 68926998 T | 06-03-1997 |
| | | EP 0382835 A | 22-08-1990 |
| | | GR 89100481 A,B | 27-06-1990 |
| | | HK 71493 A | 30-07-1993 |
| | | IN 170212 A | 29-02-1992 |
| | | JP 2840351 B | 24-12-1998 |
| | | JP 3500723 T | 21-02-1991 |
| | | PT 91301 A,B | 08-02-1990 |
| | | WO 9000865 A | 08-02-1990 |

(19) Europäisches Patentamt
European Patent Office
Office européen des brevets

(11) Publication number: **0 512 259 A2**

# (12) EUROPEAN PATENT APPLICATION

(21) Application number: **92105886.3**

(22) Date of filing: **06.04.92**

(51) Int. Cl.[5]: **A23L 3/005**, A23L 3/16, A21D 15/04, A21D 15/06

(30) Priority: **11.04.91 IT VI910059**

(43) Date of publication of application: **11.11.92 Bulletin 92/46**

(84) Designated Contracting States: **DE ES FR GB NL**

(71) Applicant: **R.F. SYSTEMS Srl**
**Via Carbonara, 29**
**I-36061 Bassano del Grappa (VI) (IT)**

(72) Inventor: **Grando, Patrizio**
**P. Dal Monte, 9**
**I-36065 Mussolente (VI) (IT)**

(74) Representative: **Bonini, Ercole**
**c/o STUDIO ING. E. Bonini SAS 8 Corso Fogazzaro**
**I-36100 Vicenza (IT)**

## (54) Method for pasteurizing food products and pasteurizing machine suited to realize said method.

(57) According to the invention a pasteurization method for food products is realized comprising a phase of quick heating of the product (10) by radio-frequency radiation, a phase of temperature maintaining of the product and a final phase of product unloading at the end of the treatment.

The pasteurizator which realizes such method comprises a heating tunnel (2), in which the product (10) to be pasteurized is heated when it passes through the plates (6,8) of a condenser (7) fed by a radio-frequency generator (4), and a temperature maintaining tunnel (3) in which the product (10) is kept in temperature by means of the circulation of air heated by a thermal exchange bank (37).

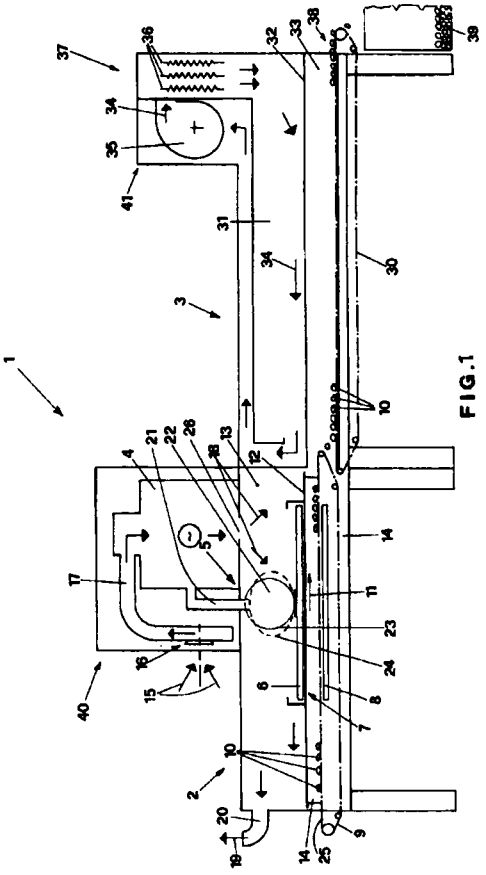

FIG.1

EP 0 512 259 A2

The invention concerns a method for the pasteurization of food products by means of a high-frequency treatment and a pasteurizator suited to realize such method.

It is known that several food products, particularly the food products made of fresh dough, like for example tortellini, lasagne and the like, must be marketed in a pasteurized form, i.e. after the bacteria contained in them, which could cause damage if ingested, are destroyed through a suitable treatment.

The traditional pasteurization method universally known and wide-spread consists in heating the product by means of traditional systems, for example through the circulation of hot air or steam. Such methods present the disadvantage of requiring a rather long time. It is known in fact that foods have a very low heat transmission coefficient, and consequently they require a long heating time before reaching the temperatures needed for the pasteurization treatment.

In order to reduce the treatment times, microwaves heating systems are also employed, by placing the product to be pasteurized under the action of a high frequency electromagnetic field with a frequency higher than 300 MHz.

Through such systems the heating takes place in shorter times than those of the traditional methods, but presents the disadvantage that the heating is substantially limited to the surface of the product, being thus not much penetrating. So the pasteurization treatment is incomplete and distributed in a non homogeneous manner in the product mass.

When the products are pasteurized in a loose state, i.e. not packaged, the heating to which they are subject causes the evaporation of the humidity contained in them and consequently their desiccation. In order to avoid this, and considering that an optimum pasteurization is that obtained in a humid ambient, the rooms in which the pasteurization treatment takes place are maintained saturated with steam.

Thus, at the end of the treatment the product contains more humidity than at the beginning and must necessarily be dried to reduce its humidity at the desired value. Obviously, this causes another disadvantage because it forces the maker to subject the product to another treatment, with a consequent increase in the costs and a prolongation of the cycle time.

In order to overcome the above mentioned limitations and disadvantages, the pasteurization method and the treatment plant of the invention are realized, the main goal of which is heating the product to be pasteurized much rapidly than using than the systems of the known type.

Another aim of the invention is that the heating is homogeneous and well distributed in the whole mass of the product under treatment.

Yet another aim of the invention is that during the pasteurization treatment the product is maintained in an ambient made humid by the evaporation of the humidity it contains, which thus does not get wasted.

Not the least scope of the invention is to realize a treatment in which at the end of the pasteurization process it is not necessary to dry the treated product.

The above mentioned aims are reached by the realization of a method for the pasteurization of food products which, according to the main claim, is characterized in that it comprises:

- a phase in which the product to be pasteurized is introduced in a heating tunnel by means of a loading belt carrier on which it is placed;
- a phase in which the product inside the heating tunnel is quickly heated by means of high frequency radiation in a treatment chamber, where said chamber has at least a movable wall for defining a variable treatment space;
- a phase in which the product is transferred from the loading belt carrier at the exit of the heating tunnel on an unloading belt carrier entering a temperature maintaining tunnel;
- a phase which maintains the temperature of the product inside a maintaining chamber belonging to said tunnel by means of hot air forced ventilation, said maintaining chamber preferably presenting at least one movable wall for defining a variable maintaining space;
- a phase in which the product is unloaded at the exit of the maintaining tunnel.

The above mentioned method is realized through a pasteurizator which comprises:

- a heating tunnel in which the product to be pasteurized enters by means of a loading belt carrier placed in the lower part of the tunnel along its whole length;
- a radio-frequency generator equipped with at least a condenser consisting of at least one couple of radiation plates placed inside the heating tunnel, where each upper plate is electrically connected with the generator by means of conductors and is arranged above the loading belt carrier surface on which the product to be pasteurized is placed, while each lower plate is connected to ground and is arranged below the belt and faced to the upper plate, under the product to be pasteurized;
- a radio-frequency transparent plate longitudinally arranged in the heating tunnel between at least one of said upper electrodes and the loading belt carrier surface;
- a tunnel for maintaining the temperature of the product, having in its lower part an unloading belt carrier on which the heated product coming from the heating tunnel is placed;
- a metallic plate longitudinally arranged in the temperature maintaining tunnel, above the unloading belt carrier;
- means for maintaining predetermined temperature levels in the tunnels.

According to a preferred form of execution, each of the two tunnels inside which the pasteurization treatment takes place is divided into two chambers hermetically separated from each other. More in detail, the lower chamber of each tunnel in which the belt supporting the product is placed is hermetically separated from the upper chamber, in which hot air circulates.

The generator which realizes the quick heating of the product in the pasteurizator consists of a self-excited C-class cavity oscillator generating a 27,12 MHz high frequency, powered by a transformer and a bridge rectifier.

Advantageously, the pasteurization method and the plant that realizes it, which are the object of the present invention, allow a more homogeneous pasteurization treatment than that of equivalent plants of the known type, since heat is uniformly distributed in the whole mass of the product. Advantageously, inside the treatment tunnels the separation between the zone in which the product is placed and the zone in which hot air circulates guarantees a more hygienic treatment, particularly in case of non packaged product. Furthermore, the pasteurization method and the plant which realizes it allow the material to maintain its own humidity unchanged during the whole process.

The above mentioned purposes and advantages will be better understood from the description of a preferred form of execution of the invention, which is only given by way of illustration, but is not meant to limit the scope of the invention, such as it is illustrated in the alleged tables of drawings, wherein:

- fig. 1 shows a longitudinal section of the pasteurization plant of the invention.

As can be observed in fig. 1, the pasteurization plant of the invention, indicated as a whole with 1, consists of two lined up tunnels the first of which, indicated as a whole with 2, is the heating tunnel, while the other, indicated as a whole with 3, is the temperature maintaining tunnel.

With reference to the heating tunnel 2, it can be observed that in its upper part it supports a radio-frequency generator 4 which feeds, through the conductors 5, the upper plate 6 of a condenser, indicated as a whole with 7, the lower plate 8 of which is connected to ground. The upper plate 6 of the condenser 7 is arranged above the loading surface 25 of a loading belt 9 on which the product 10 to be treated is arranged.

It must be specified that, in the above described case, the product to be treated is not packaged. But it could be any solid or liquid packaged food product.

When the belt moves in the direction indicated with 11, the product 10 arrives in correspondence of the plates 6 and 8 of the condenser 7, where it is heated. In fact, the generator 4 is a self-excited C-class cavity oscillator of a known type which is powered by a transformer and a bridge rectifier. It produces between the plates 6 and 8 of the condenser 7 a radio-frequency field at 27.12 MHz, which creates the heating of the product 10 when it is inside the condenser itself.

This frequency value of 27.12 MHz is not strictly binding. Said frequency is selected only because it is homologated and thus, together with the other frequencies of 13.56 MHZ and 40.68 MHz, can be employed for heating in industrial usage. From a strictly technical point of view however, for the aims of the invention, any frequency could be advantageously employed, also different from the above mentioned ones. The heating of the product is very quick and this allows the reduction of the pasteurization cycle time.

Between the upper plate 6 of the condenser 7 and the load surface 25 of the belt carrier 9, i.e. between the upper plate 6 of the condenser 7 and the product to be treated 10, a plate is interposed made of a material transparent to radio-frequency, in our specific case a glass plate 12, which divides the heating tunnel 2 into two chambers, the upper chamber 13 and the treatment lower chamber 14. With reference to the upper chamber 13 of the heating tunnel 2, it can be observed that it communicates with the outside by means of a port 20 and communicates with the inside of the generator 4 by means of an opening 26. Through the opening 26 some air is introduced into the upper chamber 13, coming from the outside and having the direction indicated with 15; said air, through a main ventilation unit 40 consisting of a fan 16 and a pipe 17, is conveyed to lick up the hot parts of the radio-frequency generator 4, thus cooling it. Said air is then heated and enters with a direction 18 the upper chamber 13 of the heating channel 2, from which it goes out through the front mouth 20 with direction 19, after having passed through the chamber 13. It is necessary that said hot air circulation takes place in the upper chamber 13 during the heating treatment of the product 10 in the lower treatment chamber 14 of the tunnel 2, so that the whole tunnel 2 is at a uniform temperature. Moreover, the glass plate 12 which separates hermetically the upper chamber 13 from the lower treatment chamber 14, not only prevents the contact between the air and the product 10 being treated, but also avoids that during the treatment the water contained in the product evaporates and gets wasted, which is necessary in order to avoid the desiccation of the product. In fact the glass plate 12 avoids the wasting of the steam and the homogeneous temperature on its surface, due to the uniformity of the temperature inside the upper chamber 13 caused by hot air circulation 18, avoids the condensation of the steam on the glass plate 12 itself.

Furthermore, it can be observed that the glass plate is movable vertically in such a way as to vary its volume, comprised between the plate and the surface 25 of the belt 9, inside which the steam released by the product under treatment is collected. The upper plate 6 of the condenser 7 is vertically movable too in

order to modify the electromagnetic field and to adjust the energy transferred to the product to be pasteurized according to its size, weight and amount.

In order to maintain the continuous electrical connection between the generator 4 and the upper plate 6 of the condenser 7 even when this is vertically moved by means of mechanical means of a known type (not represented in the figures), the conductor elements 5 which realize the electrical connection are formed by a fixed rigid conductor 21, connected to the radio-frequency generator and protruding toward the inside of the upper chamber 13 of the heating tunnel 2, and by a flexible conductor 22 made of conductor material, for example copper. Said flexible conductor 22, fixed at one end to the fixed rigid conductor 21 and at the opposite end to the surface of the upper plate 6 of the condenser 7, can get deformed elastically and can assume the configuration 23 or 24 represented in the figure, which allows it to maintain the electrical connection between the generator 4 and the upper plate 6 of the condenser 7 whatever is the position in which the upper plate 6 itself is moved.

When the heated material 10 reaches the end of the loading belt carrier 9, it falls by gravity on an unloading belt carrier 30 placed in the lower part of the temperature maintaining tunnel 3.

It is important to note that the belt 30, being independent from the belt 9, can be moved at a different speed with respect to the belt 9 itself. By adjusting the speed of the two belts in a different manner it is thus possible to realize different stay-times in the heating tunnel 2 and in the temperature maintaining tunnel 3.

As can be observed, also the tunnel 3 presents an upper chamber 31 hermetically separated by the wall 32 from the lower maintaining chamber 33 in which the belt carrier 30 slides. In the upper chamber 31 air is made to circulate in a closed circuit, by means of a secondary ventilation unit 41 composed of a fan 35 and with the direction indicated by the arrows 34, said air being heated by the electrical resistors 36 belonging to a heating bank 37 placed externally to the maintaining tunnel 3. The temperature can be modified by means of a thermostat. In this case too, the wall 32 assures the separation between the upper chamber 31 and the maintaining lower chamber 33 of the maintaining tunnel 3 but, at the same time, it assures the transmission of the heat to the material 10 to be treated, being the wall made of a conductor material, steel for example.

The constancy and uniformity of temperature in the upper chamber 31 and consequently in the product 10 is extremely important, because in the maintaining tunnel 3 the completion of the pasteurization action of the product 10 takes place, the action having been started in the heating tunnel 2. Also the wall 32 is adjustable in its vertical position by means of moving means of a known type, in such a way as to change the volume available between the wall 32 and the product 10 placed on the belt carrier 30.

At the end of the unloading belt carrier 30 the product exits through an opening 38 and falls by gravity inside a collecting container 39.

It is to be noted that the pasteurized product 10 at the exit of the maintaining oven 3 could be also conveyed inside a cooling tunnel of the known type.

According to what has been described, it can be understood that the pasteurization method and the plant that realizes it, which are the objects of the invention, fulfill all the desired goals.

More in detail, it has been seen that the pasteurization treatment takes place in shorter times than those of the known systems, and the quality of the pasteurized product is much better. In fact, since the heating is obtained through a generator which produces a radio-frequency field at 27.12 MHz, a deep heating of the material mass is obtained, contrary to known type processes employing microwaves. The pasteurization is thus better and more complete. Moreover it has been seen that during the treatment the humidity of the product is not changed, because during the heating the humidity it releases under steam form is not wasted in the ambient but remains confined in the heating tunnel 2 below the glass plate 12 and inside the temperature maintaining tunnel 3 below the wall 32 which delimits the upper chamber 31 in which hot air circulation takes place.

In the realization phase some improvements and modifications could be made to the parts of the invention, being well understood that all said variations and modifications are protected by the present invention.

## Claims

1)A method for the pasteurization of food products, characterized in that it comprises:

- a phase in which the product 10 to be pasteurized is introduced inside a heating tunnel (2) by means of a loading belt carrier (9) on which the product is placed;
- a quick heating phase of the product (10) inside the heating tunnel (2) through radio-frequency radiation in a treatment chamber (14), said chamber having at least one movable wall (12) suitable to define a treatment space;
- a phase of the product (10) transfer from the loading belt carrier (9), at the exit of the heating tunnel (2), to an unloading belt carrier (30) entering a temperature maintaining tunnel (3);
- a phase in which the temperature of the product is kept constant inside a maintaining chamber (33) belonging to said tunnel (3) by means of hot air forced ventilation, said maintaining chamber (33) presenting preferably at least one movable wall (32) suitable to define a variable maintaining space;

- a phase in which the product (10) is unloaded at the exit of the maintaining tunnel (3).

**2)** A pasteurizator suitable to realize the pasteurization method according to claim 1), characterized in that it comprises:

- a heating tunnel (2) in which the product (10) to be pasteurized is introduced by means of a loading belt carrier (9) placed in the lower part of the tunnel and along its whole length;
- a radio-frequency generator (4), having at least one condenser (7) consisting of at least one couple of radiation plates (6,8) placed inside the heating tunnel (2), where each upper plate (6) is electrically connected to the generator (4) through conductors (5) and is arranged above the surface (25) of the loading belt carrier (9) on which the product (10) to be pasteurized is placed, whereas each lower plate (8) is connected to ground and is arranged below the belt (9) under the product (10) to be pasteurized and facing the upper plate (6);
- a plate (12) made of material transparent to radio-frequencies, longitudinally arranged in the heating tunnel (2) between said at least one upper electrode (6) and the surface (25) of the loading belt carrier (9);
- a tunnel (3) for maintaining the temperature of the product (10), presenting in the lower part an unloading belt carrier (30) on which the heated product (10) coming from the heating tunnel (2) is placed;
- a metallic plate (32) longitudinally arranged in the temperature maintaining tunnel (3) above the unloading belt carrier (30);
- means (40,41) for maintaining the tunnels (2,3) at fixed temperatures;

**3)** A pasteurizator according to claim 2), characterized in that the plate (12) made of material transparent to radio-frequencies and arranged longitudinally inside the heating tunnel (2) realizes two separated chambers inside said tunnel, one of which is an upper chamber (13) communicating with temperature maintaining means (40), and the other is a lower treatment chamber (14) in which the loading belt carrier (9) is placed on which the product (10) to be treated is distributed.

**4)** A pasteurizator according to claim 2), characterized in that the metallic plate (32) longitudinally arranged inside the temperature maintaining tunnel (3) realizes two separated chambers inside said tunnel, one of which is an upper chamber (31) communicating with temperature maintaining means (41), while the other is a lower maintaining chamber (33) in which the unloading belt carrier (30) is placed.

**5)** A pasteurizator according to claim 2), characterized in that the conductors (5) which electrically connect the radio-frequency generator (4) and the condenser (7) are a fixed rigid conductor (21) connected to the radio-frequency generator, the end protruding toward the inside of the heating tunnel (2) being fixed to a flexible conductor (22) electrically connected to the upper plate (6) of the condenser (7).

**6)** A pasteurizator according to claim 2), characterized in that the upper plate (6) of the condenser (7) is vertically adjustable by means of known movement means.

**7)** A pasteurizator according to claim 2), characterized in that the plate (12) made of material transparent to radio-frequencies, placed inside the heating tunnel (2), is vertically adjustable by means of known movement means.

**8)** A pasteurizator according to claim 2), characterized in that the metallic plate (32) placed inside the temperature maintaining tunnel (3), is vertically adjustable by means of known movement means.

**9)** A pasteurizator according to claim 2), characterized in that the means which maintain the heating tunnel (2) at the preselected temperature are at least one main ventilation unit (40) comprising a fan (16) which, through an opening (26), conveys the cooling air of the radio-frequency generator (4) in an open-cycle inside the upper chamber (13) of the tunnel itself.

**10)** A pasteurizator according to claim 2), characterized in that the means which maintain the temperature maintaining tunnel (3) at the preselected temperature are at least one secondary ventilation unit (41) comprising a fan (35) which conveys the air heated by a thermal exchange bank (37) in a closed-cycle inside the upper chamber (31) of the tunnel itself.

**11)** A pasteurizator according to claim 9), characterized in that the thermal exchange bank (37) is a plurality of electric resistors (36) provided with a regulation thermostat.

**12)** A pasteurizator according to claim 2), characterized in that the radio-frequency transparent plate is made of glass.

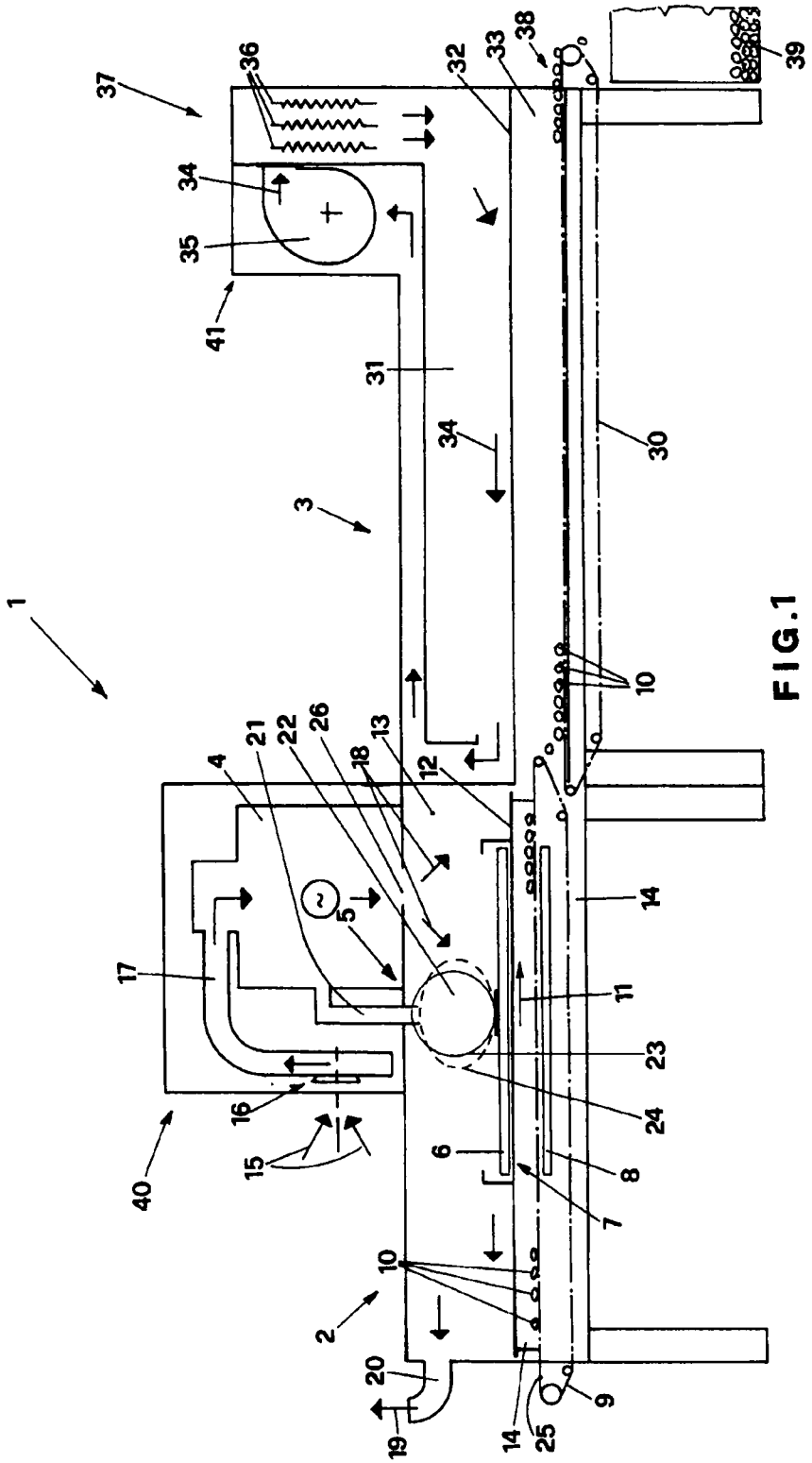
1
2
3
4
5
6
7
8
9
10
11
12
13
14
15
16
17
18
19
20
21
22
23
24
25
26
30
31
32
33
34
35
36
37
38
39
40
41

FIG.1

UNITED STATES PATENT AND TRADEMARK OFFICE

Commissioner for Patents
United States Patent and Trademark Office
P.O. Box 1450
Alexandria, VA 22313-1450
www.uspto.gov

**ADVENT IP, P.C., L.L.O.**
**2425 SOUTH 144TH STREET**
**SUITE 202**
**OMAHA NE 68144-3282**

**MAILED**
**JAN 13 2012**
**OFFICE OF PETITIONS**

In re Application of
Weaver et al.
Application No.: 13/010,398
Filed: January 20, 2011
Attorney Docket No.: 15721.0734USU1
For: MICROBIAL REDUCTION IN A PROCESSING STREAM OF A MILLED PRODUCT

: DECISION ON REQUEST TO
: PARTICIPATE IN THE PATENT
: PROSECUTION HIGHWAY
: PROGRAM AND PETITION
: TO MAKE SPECIAL UNDER
: 37 CFR 1.102(a)

This is a decision on the request to participate in the PCT Patent Prosecution Highway (PCT-PPH) pilot program and the petition under 37 CFR 1.102(a), filed on November 3, 2011, to make the above-identified application special.

The request and petition are **GRANTED**.

Discussion

A grantable request to participate in the PCT-PPH pilot program and petition to make special require:

(1) The U.S. application must have an eligible relationship to one or more PCT applications where the ISA or IPEA are the JPO, EPO, KIPO, NPI, NBPR, China, or USPTO;

(2) At least one claim in the PCT application has novelty, inventive step, and industrial applicability and must be free of any observations in Box VIII in the latest work product in the international stage or applicant must identify and explain why the claim(s) is/are not subject to the observation in Box VIII;

(3) Applicant must submit a copy of the claim(s) from the PCT application(s) that have novelty, inventive step, and industrial applicability along with an English translation thereof and a statement that the English translation is accurate, if the claims are not in the English language;

(4) All the claims in the U.S. application must sufficiently correspond or be amended to sufficiently correspond to the claim(s) that have novelty, inventive step, and industrial applicability in the PCT application(s);

(5) Examination of the U.S. application has not begun;

(6) Applicant must submit a copy of the latest international work product from the PCT application indicating that the claim(s) have novelty, inventive step, and industrial applicability along with an English translation thereof and a statement that the English translation is accurate if the latest international work product is not in the English language;

(7) Applicant must submit an IDS listing the documents cited by the PCT examiner in the international work product along with copies of documents except U.S. patents or U.S. patent application publications.

The request to participate in the PCT-PPH pilot program and petition comply with the above requirements. Accordingly, the above-identified application has been accorded "special" status.

Inquiries concerning this decision should be directed to Petitions Examiner Liana Walsh at (571) 272-3206.

All other inquiries concerning the examination or status of the application is accessible in the PAIR system at http://www.uspto.gov/ebc.index.html.

This application will be forwarded to the examiner for action on the merits commensurate with this decision.

/Thurman Page/
Petitions Examiner
Office of Petitions

UNITED STATES PATENT AND TRADEMARK OFFICE

Commissioner for Patents
United States Patent and Trademark Office
P.O. Box 1450
Alexandria, VA 22313-1450
www.uspto.gov

MAILED
AUG 12 2011
OFFICE OF PETITIONS

WINSTEAD PC
P.O. BOX 50784
DALLAS, TX 75201

In re Application of :
Curran, Morgan, and Alley :
Application No. 13/010,406 :
Filed: January 20, 2011 :
Attorney Docket No. 23853-P031US :
For: Versatile Unfolding Solar :
Deployment System :

Decision According Status
Under 37 CFR 1.47(a)

This is a decision on the petition under 37 CFR 1.47(a) filed July 7, 2011.

The petition is **granted**.

The papers filed July 7, 2011 include:

(1) A 2-page document titled "Response to Notice to File Missing Parts of Non-Provisional Application;"
(2) A 1-page request for an extension of time;
(3) A 1-page document titled "Privacy Act Statement;"
(4) A 4-page declaration signed by Curran and Alley;
(5) A 3-page Assignment document executed by Curran and Alley;
(6) A 2-page document titled, "Signature by Person With Sufficient Proprietary Interest on Behalf of Nonsigning Inventor [Pursuant to 37 CFR 1.47(a)];"
(7) A 1-page "Affidavit of Seamus Curran" with a total of 12 pages of exhibits; and
(8) A 3-page "Affidavit of Mark R. Yzaguirre" with a total of 169 pages of exhibits.

The Office has chosen to treat Document (6) set forth above as a petition under 37 CFR 1.47.

The application and papers filed July 7, 2011, have been reviewed and found in compliance with 37 CFR 1.47(a). Therefore, this application is hereby accorded Rule 47(a) status.

As provided in Rule 47(c), this Office will forward notice of this application's filing to the non-signing inventor at the address given in the petition. Notice of the filing of this application will also be published in the Official Gazette.

Documents (6) and (7) were electronically submitted in **landscape** orientation. All papers, other than drawings, must be submitted in **portrait** orientation. *See* 37 C.F.R. § 1.52(a)(iii). Although the Office has chosen not to dismiss the petition as a result of the submission of the documents in landscape orientation, papers filed in the future in this case or other cases may be rejected if improperly filed in landscape orientation.

Technology Center Art Unit 3644 will be informed of the instant decision to ensure the Art Unit is aware the pending petition has been decided and that the application is in condition to be docketed to an examiner and examined in due course.

Telephone inquiries regarding this communication should be directed to Petitions Attorney Steven Brantley at (571) 272-3203.

Charles Steven Brantley
Senior Petitions Attorney
Office of Petitions

Doc Code: PPH.PCT.652
Document Description: Petition to make special under PCT-Patent Pros Hwy

PTO/SB/20PCT-KR (06-10)
Approved for use through 01/31/2012. OMB 0651-0058
U.S. Patent and Trademark Office; U. S. DEPARTMENT OF COMMERCE
Under the Paperwork Reduction Act of 1995, no persons are required to respond to a collection of information unless it displays a valid OMB control number.

# REQUEST FOR PARTICIPATION IN THE PATENT COOPERATION TREATY - PATENT PROSECUTION HIGHWAY (PCT-PPH) PILOT PROGRAM BETWEEN THE KOREAN INTELLECTUAL PROPERTY OFFICE (KIPO) AND THE USPTO

| | | | |
|---|---|---|---|
| Application No: | 13/010,435 | Filing date: | January 20, 2011 |
| First Named Inventor: | Robert Mariniello | | |
| Title of the Invention: | TRANSPORT SCHEDULING FOR LOW MICROBIAL BULK PRODUCTS | | |

**THIS REQUEST FOR PARTICIPATION IN THE PCT-PPH PILOT PROGRAM ALONG WITH THE REQUIRED DOCUMENTS MUST BE SUBMITTED VIA EFS-WEB. INFORMATION REGARDING EFS-WEB IS AVAILABLE AT HTTP://WWW.USPTO.GOV/EBC/EFS_HELP.HTML**

**APPLICANT HEREBY REQUESTS PARTICIPATION IN THE PCT-PPH PROGRAM AND PETITIONS TO MAKE THE ABOVE-IDENTIFIED APPLICATION SPECIAL UNDER THE PCT-PPH PROGRAM.**

The above-identified application is (1) a national stage entry of the corresponding PCT application, or (2) a national stage entry of another PCT application which claims priority to the corresponding PCT application, or (3) a national application that claims domestic/ foreign priority to the corresponding PCT application, or (4) a national application which forms the basis for the priority claim in the corresponding PCT application, or (5) a continuing application of a U.S. application that satisfies one of (1) to (4) above, or (6) a U.S. application that claims domestic benefit to a U.S. provisional application which forms the basis for the priority claim in the corresponding PCT application.

**The corresponding PCT application number(s) is/are:** PCT/US2011/021898

**The international filing date of the corresponding PCT application(s) is/are:** January 20, 2011

**I. List of Required Documents:**

a. **A copy of the latest international work product (WO/ISA, WO/IPEA, or IPER) in the above-identified corresponding PCT application(s)**

☑ Is attached.

☐ Is not attached because the document is already in the U.S. application.

b. **A copy of all claims which were indicated as having novelty, inventive step and industrial applicability in the above-identified corresponding PCT application(s).**

☑ Is attached.

☐ Is not attached because the document is already in the U.S. application.

c. **English translations of the documents in a. and b. above are attached (if the documents are not in the English language). A statement that the English translation is accurate is attached for the document in b. above.**



This collection of information is required by 35 U.S.C. 119, 37 CFR 1.55, and 37 CFR 1.102(d). The information is required to obtain or retain a benefit by the public, which is to file (and by the USPTO to process) an application. Confidentiality is governed by 35 U.S.C. 122 and 37 CFR 1.11 and 1.14. This collection is estimated to take 2 hours to complete, including gathering, preparing, and submitting the completed application form to the USPTO. Time will vary depending upon the individual case. Any comments on the amount of time you require to complete this form and/or suggestions for reducing this burden should be sent to the Chief Information Officer, U.S. Patent and Trademark Office, U.S. Department of Commerce, P.O. Box 1450, Alexandria, VA 22313-1450. DO NOT SEND FEES OR COMPLETED FORMS TO THIS ADDRESS.

Approved for use through 01/31/2012. OMB 0651-0058
U.S.Patent and Trademark Office; U.S. DEPARTMENT OF COMMERCE

Under the Paperwork Reduction Act of 1995, no persons are required to respond to a collection of information unless it displays a valid OMB control number.

# REQUEST FOR PARTICIPATION IN THE PCT-PPH PILOT PROGRAM BETWEEN THE KIPO AND THE USPTO

(continued)

| | |
|---|---|
| Application No.: | 13/010,435 |
| First Named Inventor: | Robert Mariniello |

d. **(1) An information disclosure statement listing the documents cited in the international work products (ISR, WO/ISA, WO/IPEA, IPER) of the corresponding PCT application.**

☑ Is attached

☐ Has already been filed in the above-identified U.S. application on _____

**(2) Copies of all documents (except) for U.S. patents or U.S. patent application publications)**

☑ Are attached.

☐ Have already been filed in the above-identified U.S. application on _____

## II. Claims Correspondence Table:

| Claims in US Application | Patentable Claims in the corresponding PCT Application | Explanation regarding the correspondence |
|---|---|---|
| 1 | 1 | Claim 1 in U.S. App. sufficiently corresponds to claim 1 in the corresponding PCT App. |
| 2 | 2 | Claim 2 in U.S. App. sufficiently corresponds to claim 2 in the corresponding PCT App. |
| 3 | 3 | Claim 3 in U.S. App. sufficiently corresponds to claim 3 in the corresponding PCT App. |
| 4 | 4 | Claim 4 in U.S. App. sufficiently corresponds to claim 4 in the corresponding PCT App. |
| 5 | 5 | Claim 5 in U.S. App. sufficiently corresponds to claim 5 in the corresponding PCT App. |
| 6 | 6 | Claim 6 in U.S. App. sufficiently corresponds to claim 6 in the corresponding PCT App. |
| 7 | 7 | Claim 7 in U.S. App. sufficiently corresponds to claim 7 in the corresponding PCT App. |
| 8 | 8 | Claim 8 in U.S. App. sufficiently corresponds to claim 8 in the corresponding PCT App. |
| 9 | 9 | Claim 9 in U.S. App. sufficiently corresponds to claim 9 in the corresponding PCT App. |
| 10 | 10 | Claim 10 in U.S. App. sufficiently corresponds to claim 10 in the corresponding PCT App. |
| 11 | 11 | Claim 11 in U.S. App. sufficiently corresponds to claim 11 in the corresponding PCT App. |
| 12 | 12 | Claim 12 in U.S. App. sufficiently corresponds to claim 12 in the corresponding PCT App. |
| 13 | 13 | Claim 13 in U.S. App. sufficiently corresponds to claim 13 in the corresponding PCT App. |
| 14 | 14 | Claim 14 in U.S. App. sufficiently corresponds to claim 14 in the corresponding PCT App. |
| 15 | 15 | Claim 15 in U.S. App. sufficiently corresponds to claim 15 in the corresponding PCT App. |
| 16 | 16 | Claim 16 in U.S. App. sufficiently corresponds to claim 16 in the corresponding PCT App. |
| 17 | 17 | Claim 17 in U.S. App. sufficiently corresponds to claim 17 in the corresponding PCT App. |
| 18 | 18 | Claim 18 in U.S. App. sufficiently corresponds to claim 18 in the corresponding PCT App. |
| 19 | 19 | Claim 19 in U.S. App. sufficiently corresponds to claim 19 in the corresponding PCT App. |

**III. All the claims in the US application sufficiently correspond to the patentable claims in the corresponding PCT application.**

| | |
|---|---|
| Signature /Ryan T. Grace/ | Date 10/19/2011 |
| Name (Print/Typed) Ryan T. Grace | Registration Number 52,596 |

PTO/SB/20PCT-KR (06-10)
Approved for use through 01/31/2012. OMB 0651-0058
U.S.Patent and Trademark Office; U.S. DEPARTMENT OF COMMERCE
Under the Paperwork Reduction Act of 1995, no persons are required to respond to a collection of information unless it displays a valid OMB control number.

# REQUEST FOR PARTICIPATION IN THE PCT-PPH PILOT PROGRAM BETWEEN THE KIPO AND THE USPTO

(continued)

| | |
|---|---|
| Application No.: | 13/010,435 |
| First Named Inventor: | Robert Mariniello |

d. **(1) An information disclosure statement listing the documents cited in the international work products (ISR, WO/ISA, WO/IPEA, IPER) of the corresponding PCT application.**

☐ Is attached

☐ Has already been filed in the above-identified U.S. application on _____

**(2) Copies of all documents (except) for U.S. patents or U.S. patent application publications)**

☐ Are attached.

☐ Have already been filed in the above-identified U.S. application on _____

**II. Claims Correspondence Table:**

| Claims in US Application | Patentable Claims in the corresponding PCT Application | Explanation regarding the correspondence |
|---|---|---|
| 20 | 20 | Claim 20 in U.S. App. sufficiently corresponds to claim 20 in the corresponding PCT App. |
| | | |
| | | |
| | | |
| | | |
| | | |
| | | |
| | | |
| | | |
| | | |
| | | |
| | | |
| | | |
| | | |
| | | |
| | | |
| | | |
| | | |

**III. All the claims in the US application sufficiently correspond to the patentable claims in the corresponding PCT application.**

| | |
|---|---|
| Signature /Ryan T. Grace/ | Date 10/19/2011 |
| Name (Print/Typed) Ryan T. Grace | Registration Number 52,596 |

## CLAIMS DETERMINED TO BE PATENTABLE BY KIPO

**NOTE: Only Claims 1-20 were filed in this U.S. Application (13/010,435) and correspond to Claims 1-20 of the PCT Application. The remaining claims were filed in other U.S. Applications.**

1. A process comprising:

receiving, on a computing device, an indication that a low microbial (LM) bulk product vessel exceeds a low microbial wash (LMW) timing threshold;

causing the computing device to schedule a time for a LMW process;

at the time for the LMW process, causing the LMW process to be performed, wherein the LMW process includes:

removing vessel accessibility components from the LM bulk product vessel,

subjecting the vessel accessibility components to a sanitary solution bath,

securing spinners to hopper openings of the LM bulk product vessel,

subjecting the LM bulk product vessel to a rinse operation in association with a time threshold, wherein the rinse operation includes actuating the spinners by forcing hot water through the spinners to cause dispersion of the hot water within the interior of the LM bulk product vessel, and

actuating the spinners by forcing sanitary solution through the spinners to cause dispersion of the sanitary solution within the interior of the LM bulk product vessel; and

causing the computing device to update a LMW record for the LM bulk product vessel to indicate a completion date of the LMW process and to qualify the LM bulk product vessel for transporting an LM bulk product.

2. The process of claim 1, wherein the time threshold is at least 15 consecutive minutes and the hot water is at a temperature from about 140°F to about 215°F.

3. The process of claim 1, wherein the sanitary solution bath is an ammonia based sanitizer at a concentration from about 150 ppm to about 450 ppm.

4. The process of claim 1, wherein the sanitary solution bath is a benzalkonium chloride compound at a concentration from about 150 ppm to about 450 ppm.

5. The process of claim 1, wherein the LM bulk product vessel is a LM bulk flour vessel located on a road vehicle.

6. The process of claim 1, wherein the vehicle accessibility components include at least one member of a group comprising: valves, caps, gaskets, lids, product lines and screens.

7. A process comprising:

receiving an indication that a low microbial (LM) bulk product vessel exceeds a low microbial wash (LMW) timing threshold;

in response to the indication, causing a LMW process to be performed, wherein the LMW process includes:

removing vessel accessibility components from the LM bulk product vessel,

subjecting the vessel accessibility components to a sanitary solution bath,

securing spinners to hopper openings of the LM bulk product vessel, and

actuating the spinners by forcing sanitary solution through the spinners to cause dispersion of the sanitary solution within the interior of the LM bulk product vessel; and

updating a LMW record for the LM bulk product vessel to indicate a completion date of the LMW process.

8. The process of claim 7, further comprising, after securing the spinners to the hopper openings, subjecting the LM bulk product vessel to a rinse operation in association with a time threshold, wherein the rinse operation includes actuating the spinners by forcing hot water through the spinners to cause dispersion of the hot water within the interior of the LM bulk product vessel.

9. The process of claim 8, wherein the time threshold is at least 15 consecutive minutes and the hot water is at a temperature from about 140°F to about 215°F.

10. The process of claim 7, wherein the sanitary solution bath is an ammonia based sanitizer at a concentration from about 150 ppm to about 450 ppm.

11. The process of claim 7, wherein the sanitary solution bath is a benzalkonium chloride compound at a concentration from about 150 ppm to about 450 ppm.

12. The process of claim 7, wherein the LM bulk product vessel is a LM bulk flour vessel located on a road vehicle.

13. The process of claim 7, wherein the vehicle accessibility components include at least one member of a group comprising: valves, caps, gaskets, lids, product lines and screens.

14. The process of claim 7, wherein causing a LMW process to be performed includes causing a computing device to schedule the LMW process.

15. The process of claim 7, wherein updating the LMW record includes causing a computing device to qualify the LM bulk product vessel for transporting an LM bulk product.

16. A process comprising:

receiving a transportation request for the shipment of a low microbial (LM) bulk product;

determining a vehicle transport period based on the transportation request;

identifying an available vehicle for the transportation period;

obtaining a low microbial wash (LMW) timing threshold;

comparing the LMW timing threshold to a LMW wash record for the available vehicle to determine whether the LMW record for the available vehicle is within the LMW timing threshold for the transport period;

when the LMW record for the available vehicle is within the LMW timing threshold for the transport period, qualifying the available vehicle for the shipment of the LM bulk product; and

when the LMW record for the available vehicle is not within the LMW timing threshold for the transport period, causing a LMW process to be performed, wherein the LMW process includes:

removing vessel accessibility components from the vehicle,

subjecting the vessel accessibility components to a sanitary solution bath,

securing spinners to hopper openings of the vehicle,

actuating the spinners by forcing sanitary solution through the spinners to cause dispersion of the sanitary solution within the interior of the vehicle, and

qualifying the vehicle for the shipment of the LM bulk product.

17. The process of claim 16, wherein the time threshold is at least 15 consecutive minutes and the hot water is at a temperature from about 140°F to about 215°F.

18. The process of claim 16, wherein the sanitary solution bath is an ammonia based sanitizer at a concentration from about 150 ppm to about 450 ppm.

19. The process of claim 16, wherein the sanitary solution bath is a benzalkonium chloride compound at a concentration from about 150 ppm to about 450 ppm.

20. The process of claim 16, wherein the LM bulk product vessel is a LM bulk flour vessel located on a road vehicle.

21. A computer-implemented method for transport scheduling of low microbial (LM) bulk products, the computer-implemented method comprising:

receiving a LM bulk product shipment request, wherein the shipment request includes a load-out date value and a receipt date value;

causing a processor to calculate a vehicle transport period based on the load-out date value and the receipt date value;

accessing a transport schedule to determine at least one available vehicle for the calculated vehicle transport period;

comparing a low microbial wash (LMW) timing threshold to a LMW record for the at least one available vehicle to determine whether the at least one available vehicle is within the LMW timing threshold for the transport period;

when the at least one available vehicle is within the LMW timing threshold for the transport period, causing the processor to associate a qualification identifier with an identifier of the at least one available vehicle; and

when the at least one available vehicle is not within the LMW timing threshold for the transport period, causing that at least one processor to associate a disqualification identifier with the identifier of the at least one available vehicle.

22. The computer-implemented method of claim 21, wherein the LMW timing threshold of the LMW specification is based on a predetermined microbial baseline for a LM bulk product.

23. The computer-implemented method of claim 21, wherein the LM bulk product is bulk flour.

24. The computer-implemented method of claim 21, wherein the vehicle includes a flour transport vessel for holding the bulk flour.

25. The computer-implemented method of claim 21, wherein the LMW specification is obtained with the shipment request.

26. The computer-implemented method of claim 21, further comprising when the at least one available vehicle is not within the LMW timing threshold for the transport, scheduling a low microbial wash.

27. The computer-implemented method of claim 26, further comprising receiving an indication that the low microbial wash has been performed.

28. The computer-implemented method of claim 27, further comprising removing the disqualification identifier upon receiving the indication that the low microbial wash has been performed.

29. A computer-readable storage medium having computer executable instructions for transport scheduling of low microbial (LM) bulk products, the instructions comprising:

obtaining a vehicle transport period that is based on a shipping request;

comparing a low microbial wash (LMW) timing threshold of a LMW specification to a LMW record of a vehicle to determine whether the vehicle is within the LMW timing threshold for the vehicle transport period;

when the vehicle is within the LMW timing threshold for the vehicle transport period, updating a schedule of the vehicle to indicate availability of the vehicle for the shipping request; and

when the vehicle is not within the LMW timing threshold for the vehicle transport period, updating a schedule of the vehicle to indicate unavailability of the vehicle for the shipping request.

30. The computer-readable storage medium of claim 29, wherein the LMW timing threshold of the LMW specification is based on a predetermined microbial baseline for a LM bulk product.

31. The computer-readable storage medium of claim 30, wherein the LM bulk product is bulk flour.

32. The computer-readable storage medium of claim 31, wherein the vehicle includes a flour transport vessel for holding the bulk flour.

33. The computer-readable storage medium of claim 29, wherein the LMW specification is obtained with the shipping request.

34. The computer-readable storage medium of claim 29, wherein updating the schedule of the vehicle to indicate unavailability of the vehicle for the shipping request further includes scheduling a low microbial wash.

35. The computer-readable storage medium of claim 34, further comprising receiving an indication that the low microbial wash has been performed.

36. The computer-readable storage medium of claim 35 further comprising removing the indication of unavailability of the vehicle from the shipping request upon receiving the indication that the low microbial wash has been performed.

37. A system for transport scheduling of low microbial (LM) bulk products, the system comprising:

a processor;

a memory having computer-executable instructions stored thereon, wherein the computer-executable instructions are configured for:

obtaining a vehicle transport period that is based on a shipping request;

comparing a low microbial wash (LMW) timing threshold to a LMW record of a vehicle to determine whether the vehicle is within the LMW timing threshold for the vehicle transport period;

when the vehicle is within the LMW timing threshold for the vehicle transport period, updating a schedule of the vehicle to indicate availability of the vehicle for the shipping request; and

when the vehicle is not within the LMW timing threshold for the vehicle transport period, causing at least one member of a group comprising:

updating a schedule of the vehicle to indicate unavailability of the vehicle for the shipping request,

comparing the LMW timing threshold to a LMW record of another vehicle to determine whether the another vehicle is within the LMW timing threshold for the vehicle transport period, and

scheduling the vehicle for a LMW process prior to the vehicle transport period to cause availability of the vehicle for the shipping request.

38. The system of claim 37, wherein the LMW timing threshold of the LMW specification is based on a predetermined microbial baseline for a LM bulk product.

39. The system of claim 38, wherein the LM bulk product is bulk flour.

40. The system of claim 39, wherein the vehicle includes a flour transport vessel for holding the bulk flour.

41. A computer-implemented method comprising:

obtaining a shipping request for a low microbial (LM) bulk product, wherein the shipping request includes a requested receipt date and a product type identifier;

causing at least one processor to calculate a load-out date based on the receipt date;

causing the at least one processor to match the product type identifier of the shipping request to a LMW specification, wherein the LMW specification includes LMW process instructions and a LMW timing threshold, wherein the LMW timing threshold is based on a microbial baseline that indicates a microbial differential over time; and

sending a transport request to a shipping entity, wherein the shipping request includes an identification of the LMW specification to facilitate implementation of the LMW process instructions and the LMW timing threshold as a conditional factor during scheduling of a transport vehicle.

42. The computer-implemented method of claim 41, wherein the product type identifier indicates bulk flour.

43. The computer-implemented method of claim 41, wherein the product type identifier indicates at least one member of a group comprising: flour, bran, germ, grain, oat, rye, wheat, barley, sugar, spice, ground vegetable, ground pepper, and ground fruit.

44. The computer-implemented method of claim 41, wherein causing the at least one processor to match the product type identifier of the shipping request to the LMW specification further comprises:

querying a database, having a plurality of LMW specifications for a plurality of LM bulk product types, with the received product type identifier; and

obtaining a LMW specification among the plurality of LMW specifications that includes a product type identifier that matches the product type identifier of the query.

45. The computer-implemented method of claim 41, further comprising sending a load-out request to a load-out scheduling module, wherein the load-out request includes an identification of the LMW specification and the load-out date to facilitate preconditioning of the LM bulk product prior to load-out.

46. A computer-readable storage medium having computer executable instructions comprising:

receiving a shipping request for a low microbial (LM) bulk product, wherein the shipping request includes a product type identifier;

obtaining a low microbial wash (LMW) specification that matches the product type identifier, wherein the LMW specification includes LMW process instructions and a LMW timing threshold, wherein the LMW timing threshold is based on a microbial baseline that indicates a microbial differential over time; and

sending a transport request to a shipping entity, wherein the shipping request includes an identification of the LMW specification to facilitate implementation of the LMW process instructions and the LMW timing threshold as a conditional factor during scheduling of a transport vehicle.

47. The computer-readable storage medium of claim 46, wherein the product type identifier indicates bulk flour.

48. The computer-readable storage medium of claim 46, wherein the product type identifier indicates at least one member of a group comprising: flour, bran, germ, grain, oat, rye, wheat, barley, sugar, spice, ground vegetable, ground pepper, and ground fruit.

49. The computer-readable storage medium of claim 46, wherein obtaining the LMW specification that matches the product type identifier further comprises:

querying a database, having a plurality of LMW specifications for a plurality of LM bulk product types, with the received product type identifier; and

obtaining a LMW specification among the plurality of LMW specifications that includes a product type identifier that matches the product type identifier of the query.

50. The computer-readable storage medium of claim 46, wherein the shipping request further includes a requested receipt date.

51. The computer-readable storage medium of claim 50, further comprising calculating a load-out date based on the receipt date.

52. The computer-readable storage medium of claim 51, further comprising sending a load-out request to a load-out scheduling module, wherein the load-out request includes an identification of the LMW specification and the load-out date to facilitate preconditioning of the LM bulk product prior to load-out.

53. A system comprising:

at least one processor; and

at least one memory having computer executable instructions stored thereon, wherein the computer executable instruction are configured for:

receiving a shipping request for a low microbial (LM) bulk product, wherein the shipping request includes a requested receipt date and a product type identifier;

causing the processor to calculate a load-out date based on the receipt date;

causing the processor to match the product type identifier of the shipping request to a LMW specification, wherein the LMW specification includes LMW process instructions and a LMW timing threshold, wherein the LMW timing threshold is based on wherein the LMW timing threshold is based on a microbial baseline that indicates a microbial differential over time; and

sending a transport request to a shipping entity, wherein the shipping request includes an identification of the LMW specification to facilitate implementation of the

LMW process instructions and the LMW timing threshold as a conditional factor during scheduling of a transport vehicle.

54. The system of claim 53, wherein the product type identifier indicates bulk flour.

55. The system of claim 53, wherein the product type identifier indicates at least one member of a group comprising: flour, bran, germ, grain, oat, rye, wheat, barley, sugar, spice, ground vegetable, ground pepper, and ground fruit.

56. The system of claim 53, wherein causing the processor to match the product type identifier of the shipping request to the LMW specifications further comprises:

querying a database, having a plurality of LMW specifications for a plurality of LM bulk product types, with the received product type identifier; and

obtaining a LMW specification among the plurality of LMW specifications that includes a product type identifier that matches the product type identifier of the query.

57. The system of claim 53, further comprising sending a load-out request to a load-out scheduling module, wherein the load-out request includes an identification of the LMW specification and the load-out date to facilitate preconditioning of the LM bulk product prior to load-out.

58. A computer-readable storage medium having computer executable instructions for adjusting a low microbial (LM) bulk product for a product transport period having predicted environmental conditions, the instructions comprising:

determining a product transport period based on a shipping request;

obtaining predicted environmental conditions related to the product transport period;

determining optimal product conditions, for the LM bulk product, to be maintained during the product transport period;

receiving an indication of current product conditions of the LM bulk product;

determining whether the current product conditions require adjustment to maintain the optimal product conditions for the transport period having the predicted environmental conditions; and

when the current product conditions require adjustment to maintain the optimal product conditions for the transport period having the predicted environmental conditions, adjusting the current product conditions to a value that maintains the optimal product conditions during the transport period having the environmental conditions.

59. The computer-readable storage medium of claim 58, wherein the predicted environmental conditions include at least one member of a group comprising: a temperature value for the transport period along a transport path, and a humidity value for the transport period along a transport path.

60. The computer-readable storage medium of claim 59, wherein the optimal product conditions include at least one member of a group comprising: an optimal temperature to be maintained during the product transport period and an optimal moisture content to be maintained during the product transport period.

61. The computer-readable storage medium of claim 60, wherein the optimal product conditions are determined from a low microbial wash specification ("LMW") obtained from a database including a plurality of LMW specifications for a plurality of LM bulk product types.

62. The computer-readable storage medium of claim 58, wherein the current product conditions of the LM bulk product include at least one member of a group comprising: a current temperature and a current moisture content.

63. The computer-readable storage medium of claim 62, wherein adjusting the current product conditions to a value that maintains the optimal product conditions during the transport period having the predicted environmental conditions includes at least one member of a group comprising: adjusting the temperature of the LM bulk product to a temperature that maintains an optimal product temperature during the transport period having a predicted environmental

temperature, and adjusting the moisture content of the LM bulk product to a moisture content that maintains an optimal product moisture content during the transport period having a predicted environmental humidity.

64. The computer-readable storage medium of claim 63, wherein adjusting the current product conditions occurs prior to load-out.

65. The computer-readable storage medium of claim 63, wherein adjusting the current product conditions occurs during transport.

66. A computer-implemented method for adjusting a low microbial (LM) bulk product for a product transport period having predicted environmental conditions, the instructions comprising:

causing a processor to determine a product transport period based on a shipping request;

causing the processor to obtain predicted environmental conditions related to the product transport period;

causing the processor to determine optimal product conditions, for the LM bulk product, to be maintained during the product transport period;

receiving an indication of current product conditions of the LM bulk product;

causing the processor to determine whether the current product conditions require adjustment to maintain the optimal product conditions for the transport period having the predicted environmental conditions; and

when the current product condition values require adjustment to maintain the optimal product conditions for the transport period having the predicted environmental conditions, adjusting the current product conditions to a value that maintains the optimal product conditions during the transport period having the environmental conditions.

67. The computer-implemented method of claim 66, wherein the predicted environmental conditions include at least one member of a group comprising: a temperature value for the transport period along a transport path and a humidity value for the transport period along a transport path.

68. The computer-implemented method of claim 67, wherein the optimal product conditions include at least one member of a group comprising: an optimal temperature to be maintained during the product transport period and an optimal moisture content to be maintained during the product transport period.

69. The computer-implemented method of claim 68, wherein the optimal product conditions are determined from a low microbial wash specification ("LMW") obtained from a database including a plurality of LMW specifications for a plurality of LM bulk product types.

70. The computer-implemented method of claim 68, wherein the current product conditions of the LM bulk product include at least one member of a group comprising: a current temperature and a current moisture content.

71. The computer-implemented method of claim 70, wherein adjusting the current product conditions to a value that maintains the optimal product conditions during the transport period having the predicted environmental conditions includes at least one member of a group comprising: adjusting the temperature of the LM bulk product to a temperature that maintains an optimal product temperature during the transport period having a predicted environmental temperature and adjusting the moisture content of the LM bulk product to a moisture content that maintains an optimal product moisture content during the transport period having a predicted environmental humidity.

72. The computer-implemented method of claim 71, wherein adjusting the current product conditions occurs in association with at least one member of a group comprising: prior to load-out and during transport.

73. A system for adjusting a low microbial (LM) bulk product prior to a product transport period, the system comprising:

at least one LM bulk product condition sensor configured to monitor conditions of the LM bulk product;

at least one LM bulk product condition adjustor device configured to adjust current product condition values of the LM bulk product;

at least one processor; and

at least one memory having computer executable instructions stored thereon, wherein the computer executable instructions are configured for:

obtaining predicted environmental condition values related to a product transport period;

causing the at least one processor to determine optimal product condition values, for the LM bulk, to be maintained during the product transport period;

receiving current product condition values from at least one LM bulk product condition sensor;

cause the at least one processor to determining whether the current product condition values require adjustment to maintain the optimal product conditions for the transport period having the predicted environmental conditions; and

when the current product condition values require adjustment to maintain the optimal product conditions for the transport period having the predicted environmental conditions, causing the at least one processor to send an actuation signal to the at least one LM bulk product condition adjustor device to cause adjustment of the current product condition values to a value that maintains the optimal product conditions during the transport period having the environmental conditions.

74. The system of claim 73, wherein the predicted environmental conditions include at least one member of a group comprising: a temperature value for the transport period along a transport path and a humidity value for the transport period along a transport path.

75. The system of claim 74, wherein the optimal product conditions include at least one member of a group comprising: an optimal temperature to be maintained during the product transport period and an optimal moisture content to be maintained during the product transport period.

76. The system of claim 75, wherein the current product conditions of the LM bulk product include at least one member of a group comprising: a current temperature and a current moisture content.

77. The system of claim 76, wherein adjusting the current product conditions to a value that maintains the optimal product conditions during the transport period having the predicted environmental conditions includes at least one member of a group comprising: adjusting the temperature of the LM bulk product to a temperature that maintains an optimal product temperature during the transport period having a predicted environmental temperature and adjusting the moisture content of the LM bulk product to a moisture content that maintains an optimal product moisture content during the transport period having a predicted environmental humidity.

UNITED STATES PATENT AND TRADEMARK OFFICE

UNITED STATES DEPARTMENT OF COMMERCE
United States Patent and Trademark Office
Address: COMMISSIONER FOR PATENTS
P.O. Box 1450
Alexandria, Virginia 22313-1450
www.uspto.gov

| APPLICATION NO. | FILING DATE | FIRST NAMED INVENTOR | ATTORNEY DOCKET NO. | CONFIRMATION NO. |
|---|---|---|---|---|
| 13/010,435 | 01/20/2011 | ROBERT MARINIELLO | 15721.0734USU2 | 2697 |

96845 7590 11/16/2011

Advent IP, P.C., L.L.O.
2425 South 144th Street
Suite 202
Omaha, NE 68144-3282

| EXAMINER | |
|---|---|
| KWAK, DEAN P | |
| **ART UNIT** | **PAPER NUMBER** |
| 1773 | |

| NOTIFICATION DATE | DELIVERY MODE |
|---|---|
| 11/16/2011 | ELECTRONIC |

**Please find below and/or attached an Office communication concerning this application or proceeding.**

The time period for reply, if any, is set in the attached communication.

Notice of the Office communication was sent electronically on above-indicated "Notification Date" to the following e-mail address(es):

uspto@adventip.com
kelly@adventip.com
berggren@adventip.com

UNITED STATES PATENT AND TRADEMARK OFFICE

Commissioner for Patents
United States Patent and Trademark Office
P.O. Box 1450
Alexandria, VA 22313-1450
www.uspto.gov

BC

November 15, 2011

| | | |
|---|---|---|
| In re application of | : | DECISION ON REQUEST TO |
| Robert Mariniello et al. | : | PARTICIPATE IN PATENT |
| Serial No. 13/010,435 | : | PROSECUTION HIGHWAY |
| Filed: January 20, 2011 | : | PROGRAM AND |
| Attorney Docket No: 15721.0734USU2 | : | PETITION TO MAKE SPECIAL |
| | : | UNDER 37 CFR 1.102(a) |

This is a decision on the request to participate in the PCT Patent Prosecution Highway (PCT-PPH) pilot program and the petition under 37 CFR 1.102(a), filed October 19, 2011, to make the above-identified application special.

The request and petition are **GRANTED**.

A grantable request to participate in the PCT-PPH pilot program and petition to make special require:

(1) The U.S. application must disclose an eligible relationship to one or more PCT applications where the ISA or IPEA are the APO, IPA, JPO, KIPO, NBPR, NPI, EPO, Rospatent, IPOS, SPTO, PRV, UK IPO or USPTO;

(2) At least one claim in the PCT application has novelty, inventive step, and industrial applicability and must be free of any observations in Box VIII in the latest work product in the international stage or applicant must identify and explain why the claim(s) is/are not subject to the observation in Box VIII;

(3) Applicant must submit a copy of the claim(s) from the PCT application(s) that have novelty, inventive step, and industrial applicability along with an English translation thereof and a statement that the English translation is accurate, if the claims are not in the English language;

(4) All the claims in the U.S. application must sufficiently correspond or be amended to sufficiently correspond to the claim(s) that have novelty, inventive step, and industrial applicability in the PCT application(s);

(5) Examination of the U.S. application has not begun;

(6) Applicant must submit a copy of the latest international work product from the PCT application indicating that the claim(s) have novelty, inventive step, and industrial applicability along with an English translation thereof if the latest international work

product is not in the English language; and

(7) Applicant must submit an IDS listing the documents cited by the PCT examiner in the international work product along with copies of documents except U.S. patents or U.S. patent application publications.

The request to participate in the PPH program and petition comply with the above requirements. Accordingly, the above-identified application has been accorded "special" status.

The application is being forwarded to the examiner for action on the merits commensurate with this decision.

Any inquiry regarding this decision should be directed to Blaine Copenheaver, Quality Assurance Specialist, at (571) 272-1156.

All other inquiries concerning the examination or status of the application is accessible in the PAIR system at http://www.uspto.gov/ebc/index.html.

/Blaine Copenheaver/

Blaine Copenheaver
Quality Assurance Specialist
Technology Center 1700

| | |
|---|---|
| **Doc Code: PET.AUTO**<br>**Document Description: Petition automatically granted by EFS-Web** | PTO/SB/83<br>U.S. Patent and Trademark Office<br>Department of Commerce |

| | |
|---|---|
| Electronic Petition Request | **REQUEST FOR WITHDRAWAL AS ATTORNEY OR AGENT AND CHANGE OF CORRESPONDENCE ADDRESS** |
| Application Number | 13010446 |
| Filing Date | 20-Jan-2011 |
| First Named Inventor | John Babich |
| Art Unit | 1618 |
| Examiner Name | DAMERON JONES |
| Attorney Docket Number | 346715-0740 |
| Title | TECHNETIUM-DIPYRIDINE COMPLEXES, AND METHODS OF USE THEREOF |

◉ Please withdraw me as attorney or agent for the above identified patent application and the practitioners of record associated with Customer Number: 48329

The reason(s) for this request are those described in 37 CFR:

10.40(b)(4)

Certifications

☒ I/We have given reasonable notice to the client, prior to the expiration of the response period, that the practitioner(s) intend to withdraw from employment

☒ I/We have delivered to the client or a duly authorized representative of the client all papers and property (including funds) to which the client is entitled

☒ I/We have notified the client of any responses that may be due and the time frame within which the client must respond

Change the correspondence address and direct all future correspondence to the first named inventor or assignee that has properly made itself of record pursuant to 37 CFR 3.71:

| | |
|---|---|
| Name | Mr. John Garvey K&L Gates |
| Address | One Lincoln Street |
| City | Boston |
| State | MA |
| Postal Code | 02111 |
| Country | US |

| I am authorized to sign on behalf of myself and all withdrawing practitioners. | |
|---|---|
| Signature | /Michel Morency/ |
| Name | Michel Morency |
| Registration Number | 50183 |

UNITED STATES PATENT AND TRADEMARK OFFICE

Commissioner for Patents
United States Patent and Trademark Office
P.O. Box 1450
Alexandria, VA 22313-1450
www.uspto.gov

Decision Date : April 18, 2012

In re Application of :

John Babich

Application No : 13010446

Filed : 20-Jan-2011

Attorney Docket No : 346715-0740

DECISION ON REQUEST TO WITHDRAW AS ATTORNEY/AGENTOF RECORD

This is an electronic decision on the Request to Withdraw as attorney or agent of record under 37 CFR § 1.36(b), filed April 18, 2012

The request is **APPROVED.**

The request was signed by Michel Morency (registration no. 50183 ) on behalf of all attorneys/agents associated with Customer Number 48329 . All attorneys/agents associated with Cusotmer Number 48329 have been withdrawn.

Since there are no remaining attorneys of record, all future communications from the Office will be directed to the first named inventor or assignee that has properly made itself of record pursuant to 37 CFR 3.71, with correspondence address:

| | |
|---|---|
| Name | Mr. John Garvey |
| Name2 | K&L Gates |
| Address 1 | One Lincoln Street |
| Address 2 | |
| City | Boston |
| State | MA |
| Postal Code | 02111 |
| Country | US |

As a reminder, requester is required to inform the first named inventor or assignee that has properly made itself of record pursuant to 37 CFR 3.71 of the electronically processed petition.

Telephone inquiries concerning this decision should be directed to the Patent Electronic Business Center (EBC) at 866-217-9197.

Office of Petitions

**Doc Code: PPH.PCT.652**
**Document Description: Petition to make special under PCT-Patent Pros Hwy**

PTO/SB/20PCT-KR (06-10)
Approved for use through 01/31/2012. OMB 0651-0058
U.S. Patent and Trademark Office; U. S. DEPARTMENT OF COMMERCE
Under the Paperwork Reduction Act of 1995, no persons are required to respond to a collection of information unless it displays a valid OMB control number.

# REQUEST FOR PARTICIPATION IN THE PATENT COOPERATION TREATY - PATENT PROSECUTION HIGHWAY (PCT-PPH) PILOT PROGRAM BETWEEN THE KOREAN INTELLECTUAL PROPERTY OFFICE (KIPO) AND THE USPTO

| | | | |
|---|---|---|---|
| Application No: | 13/010,458 | Filing date: | January 20, 2011 |
| First Named Inventor: | Robert Mariniello | | |
| Title of the Invention: | TRANSPORT SCHEDULING FOR LOW MICROBIAL BULK PRODUCTS | | |

**THIS REQUEST FOR PARTICIPATION IN THE PCT-PPH PILOT PROGRAM ALONG WITH THE REQUIRED DOCUMENTS MUST BE SUBMITTED VIA EFS-WEB. INFORMATION REGARDING EFS-WEB IS AVAILABLE AT HTTP://WWW.USPTO.GOV/EBC/EFS_HELP.HTML**

**APPLICANT HEREBY REQUESTS PARTICIPATION IN THE PCT-PPH PROGRAM AND PETITIONS TO MAKE THE ABOVE-IDENTIFIED APPLICATION SPECIAL UNDER THE PCT-PPH PROGRAM.**

The above-identified application is (1) a national stage entry of the corresponding PCT application, or (2) a national stage entry of another PCT application which claims priority to the corresponding PCT application, or (3) a national application that claims domestic/ foreign priority to the corresponding PCT application, or (4) a national application which forms the basis for the priority claim in the corresponding PCT application, or (5) a continuing application of a U.S. application that satisfies one of (1) to (4) above, or (6) a U.S. application that claims domestic benefit to a U.S. provisional application which forms the basis for the priority claim in the corresponding PCT application.

**The corresponding PCT application number(s) is/are:** PCT/US2011/021898

**The international filing date of the corresponding PCT application(s) is/are:**
January 20, 2011

**I. List of Required Documents:**

a. **A copy of the latest international work product (WO/ISA, WO/IPEA, or IPER) in the above-identified corresponding PCT application(s)**

☑ Is attached.

☐ Is not attached because the document is already in the U.S. application.

b. **A copy of all claims which were indicated as having novelty, inventive step and industrial applicability in the above-identified corresponding PCT application(s).**

☑ Is attached.

☐ Is not attached because the document is already in the U.S. application.

c. **English translations of the documents in a. and b. above are attached (if the documents are not in the English language). A statement that the English translation is accurate is attached for the document in b. above.**



This collection of information is required by 35 U.S.C. 119, 37 CFR 1.55, and 37 CFR 1.102(d). The information is required to obtain or retain a benefit by the public, which is to file (and by the USPTO to process) an application. Confidentiality is governed by 35 U.S.C. 122 and 37 CFR 1.11 and 1.14. This collection is estimated to take 2 hours to complete, including gathering, preparing, and submitting the completed application form to the USPTO. Time will vary depending upon the individual case. Any comments on the amount of time you require to complete this form and/or suggestions for reducing this burden should be sent to the Chief Information Officer, U.S. Patent and Trademark Office, U.S. Department of Commerce, P.O. Box 1450, Alexandria, VA 22313-1450. DO NOT SEND FEES OR COMPLETED FORMS TO THIS ADDRESS.

# REQUEST FOR PARTICIPATION IN THE PCT-PPH PILOT PROGRAM BETWEEN THE KIPO AND THE USPTO

(continued)

| | |
|---|---|
| Application No.: | 13/010,458 |
| First Named Inventor: | Robert Mariniello |

d. **(1) An information disclosure statement listing the documents cited in the international work products (ISR, WO/ISA, WO/IPEA, IPER) of the corresponding PCT application.**

☑ Is attached

☐ Has already been filed in the above-identified U.S. application on _____

**(2) Copies of all documents (except) for U.S. patents or U.S. patent application publications)**

☑ Are attached.

☐ Have already been filed in the above-identified U.S. application on _____

**II. Claims Correspondence Table:**

| Claims in US Application | Patentable Claims in the corresponding PCT Application | Explanation regarding the correspondence |
|---|---|---|
| 1 | 21 | Claim 1 in U.S. App. sufficiently corresponds to claim 21 in the corresponding PCT App. |
| 2 | 22 | Claim 2 in U.S. App. sufficiently corresponds to claim 22 in the corresponding PCT App. |
| 3 | 23 | Claim 3 in U.S. App. sufficiently corresponds to claim 23 in the corresponding PCT App. |
| 4 | 24 | Claim 4 in U.S. App. sufficiently corresponds to claim 24 in the corresponding PCT App. |
| 5 | 25 | Claim 5 in U.S. App. sufficiently corresponds to claim 25 in the corresponding PCT App. |
| 6 | 26 | Claim 6 in U.S. App. sufficiently corresponds to claim 26 in the corresponding PCT App. |
| 7 | 27 | Claim 7 in U.S. App. sufficiently corresponds to claim 27 in the corresponding PCT App. |
| 8 | 28 | Claim 8 in U.S. App. sufficiently corresponds to claim 28 in the corresponding PCT App. |
| 9 | 29 | Claim 9 in U.S. App. sufficiently corresponds to claim 29 in the corresponding PCT App. |
| 10 | 30 | Claim 10 in U.S. App. sufficiently corresponds to claim 30 in the corresponding PCT App. |
| 11 | 31 | Claim 11 in U.S. App. sufficiently corresponds to claim 31 in the corresponding PCT App. |
| 12 | 32 | Claim 12 in U.S. App. sufficiently corresponds to claim 32 in the corresponding PCT App. |
| 13 | 33 | Claim 13 in U.S. App. sufficiently corresponds to claim 33 in the corresponding PCT App. |
| 14 | 34 | Claim 14 in U.S. App. sufficiently corresponds to claim 34 in the corresponding PCT App. |
| 15 | 35 | Claim 15 in U.S. App. sufficiently corresponds to claim 35 in the corresponding PCT App. |
| 16 | 36 | Claim 16 in U.S. App. sufficiently corresponds to claim 36 in the corresponding PCT App. |
| 17 | 37 | Claim 17 in U.S. App. sufficiently corresponds to claim 37 in the corresponding PCT App. |
| 18 | 38 | Claim 18 in U.S. App. sufficiently corresponds to claim 38 in the corresponding PCT App. |
| 19 | 39 | Claim 19 in U.S. App. sufficiently corresponds to claim 39 in the corresponding PCT App. |

**III. All the claims in the US application sufficiently correspond to the patentable claims in the corresponding PCT application.**

| | |
|---|---|
| Signature /Ryan T. Grace/ | Date 10/19/2011 |
| Name (Print/Typed) Ryan T. Grace | Registration Number 52,596 |

PTO/SB/20PCT-KR (06-10)
Approved for use through 01/31/2012. OMB 0651-0058
U.S.Patent and Trademark Office; U.S. DEPARTMENT OF COMMERCE
Under the Paperwork Reduction Act of 1995, no persons are required to respond to a collection of information unless it displays a valid OMB control number.

# REQUEST FOR PARTICIPATION IN THE PCT-PPH PILOT PROGRAM BETWEEN THE KIPO AND THE USPTO

(continued)

| | |
|---|---|
| Application No.: | 13/010,458 |
| First Named Inventor: | Robert Mariniello |

d. **(1) An information disclosure statement listing the documents cited in the international work products (ISR, WO/ISA, WO/IPEA, IPER) of the corresponding PCT application.**

☐ Is attached

☐ Has already been filed in the above-identified U.S. application on _____

**(2) Copies of all documents (except) for U.S. patents or U.S. patent application publications)**

☐ Are attached.

☐ Have already been filed in the above-identified U.S. application on _____

**II. Claims Correspondence Table:**

| Claims in US Application | Patentable Claims in the corresponding PCT Application | Explanation regarding the correspondence |
|---|---|---|
| 20 | 40 | Claim 20 in U.S. App. sufficiently corresponds to claim 40 in the corresponding PCT App. |
| | | |
| | | |
| | | |
| | | |
| | | |
| | | |
| | | |
| | | |
| | | |
| | | |
| | | |
| | | |
| | | |
| | | |
| | | |
| | | |
| | | |

**III. All the claims in the US application sufficiently correspond to the patentable claims in the corresponding PCT application.**

| | |
|---|---|
| Signature /Ryan T. Grace/ | Date 10/19/2011 |
| Name (Print/Typed) Ryan T. Grace | Registration Number 52,596 |

## CLAIMS DETERMINED TO BE PATENTABLE BY KIPO

**NOTE: Only Claims 21-40 (denoted therein as Claims 1-20) were filed in this U.S. Application (13/010,458) and correspond to Claims 21-40 of the PCT Application. The remaining claims were filed in other U.S. Applications.**

1. A process comprising:

receiving, on a computing device, an indication that a low microbial (LM) bulk product vessel exceeds a low microbial wash (LMW) timing threshold;

causing the computing device to schedule a time for a LMW process;

at the time for the LMW process, causing the LMW process to be performed, wherein the LMW process includes:

removing vessel accessibility components from the LM bulk product vessel,

subjecting the vessel accessibility components to a sanitary solution bath,

securing spinners to hopper openings of the LM bulk product vessel,

subjecting the LM bulk product vessel to a rinse operation in association with a time threshold, wherein the rinse operation includes actuating the spinners by forcing hot water through the spinners to cause dispersion of the hot water within the interior of the LM bulk product vessel, and

actuating the spinners by forcing sanitary solution through the spinners to cause dispersion of the sanitary solution within the interior of the LM bulk product vessel; and

causing the computing device to update a LMW record for the LM bulk product vessel to indicate a completion date of the LMW process and to qualify the LM bulk product vessel for transporting an LM bulk product.

2. The process of claim 1, wherein the time threshold is at least 15 consecutive minutes and the hot water is at a temperature from about 140°F to about 215°F.

3. The process of claim 1, wherein the sanitary solution bath is an ammonia based sanitizer at a concentration from about 150 ppm to about 450 ppm.

4. The process of claim 1, wherein the sanitary solution bath is a benzalkonium chloride compound at a concentration from about 150 ppm to about 450 ppm.

5. The process of claim 1, wherein the LM bulk product vessel is a LM bulk flour vessel located on a road vehicle.

6. The process of claim 1, wherein the vehicle accessibility components include at least one member of a group comprising: valves, caps, gaskets, lids, product lines and screens.

7. A process comprising:

receiving an indication that a low microbial (LM) bulk product vessel exceeds a low microbial wash (LMW) timing threshold;

in response to the indication, causing a LMW process to be performed, wherein the LMW process includes:

removing vessel accessibility components from the LM bulk product vessel,

subjecting the vessel accessibility components to a sanitary solution bath,

securing spinners to hopper openings of the LM bulk product vessel, and

actuating the spinners by forcing sanitary solution through the spinners to cause dispersion of the sanitary solution within the interior of the LM bulk product vessel; and

updating a LMW record for the LM bulk product vessel to indicate a completion date of the LMW process.

8. The process of claim 7, further comprising, after securing the spinners to the hopper openings, subjecting the LM bulk product vessel to a rinse operation in association with a time threshold, wherein the rinse operation includes actuating the spinners by forcing hot water through the spinners to cause dispersion of the hot water within the interior of the LM bulk product vessel.

9. The process of claim 8, wherein the time threshold is at least 15 consecutive minutes and the hot water is at a temperature from about 140°F to about 215°F.

10. The process of claim 7, wherein the sanitary solution bath is an ammonia based sanitizer at a concentration from about 150 ppm to about 450 ppm.

11. The process of claim 7, wherein the sanitary solution bath is a benzalkonium chloride compound at a concentration from about 150 ppm to about 450 ppm.

12. The process of claim 7, wherein the LM bulk product vessel is a LM bulk flour vessel located on a road vehicle.

13. The process of claim 7, wherein the vehicle accessibility components include at least one member of a group comprising: valves, caps, gaskets, lids, product lines and screens.

14. The process of claim 7, wherein causing a LMW process to be performed includes causing a computing device to schedule the LMW process.

15. The process of claim 7, wherein updating the LMW record includes causing a computing device to qualify the LM bulk product vessel for transporting an LM bulk product.

16. A process comprising:

receiving a transportation request for the shipment of a low microbial (LM) bulk product;

determining a vehicle transport period based on the transportation request;

identifying an available vehicle for the transportation period;

obtaining a low microbial wash (LMW) timing threshold;

comparing the LMW timing threshold to a LMW wash record for the available vehicle to determine whether the LMW record for the available vehicle is within the LMW timing threshold for the transport period;

when the LMW record for the available vehicle is within the LMW timing threshold for the transport period, qualifying the available vehicle for the shipment of the LM bulk product; and

when the LMW record for the available vehicle is not within the LMW timing threshold for the transport period, causing a LMW process to be performed, wherein the LMW process includes:

removing vessel accessibility components from the vehicle,

subjecting the vessel accessibility components to a sanitary solution bath,

securing spinners to hopper openings of the vehicle,

actuating the spinners by forcing sanitary solution through the spinners to cause dispersion of the sanitary solution within the interior of the vehicle, and

qualifying the vehicle for the shipment of the LM bulk product.

17. The process of claim 16, wherein the time threshold is at least 15 consecutive minutes and the hot water is at a temperature from about 140°F to about 215°F.

18. The process of claim 16, wherein the sanitary solution bath is an ammonia based sanitizer at a concentration from about 150 ppm to about 450 ppm.

19. The process of claim 16, wherein the sanitary solution bath is a benzalkonium chloride compound at a concentration from about 150 ppm to about 450 ppm.

20. The process of claim 16, wherein the LM bulk product vessel is a LM bulk flour vessel located on a road vehicle.

21. A computer-implemented method for transport scheduling of low microbial (LM) bulk products, the computer-implemented method comprising:

receiving a LM bulk product shipment request, wherein the shipment request includes a load-out date value and a receipt date value;

causing a processor to calculate a vehicle transport period based on the load-out date value and the receipt date value;

accessing a transport schedule to determine at least one available vehicle for the calculated vehicle transport period;

comparing a low microbial wash (LMW) timing threshold to a LMW record for the at least one available vehicle to determine whether the at least one available vehicle is within the LMW timing threshold for the transport period;

when the at least one available vehicle is within the LMW timing threshold for the transport period, causing the processor to associate a qualification identifier with an identifier of the at least one available vehicle; and

when the at least one available vehicle is not within the LMW timing threshold for the transport period, causing that at least one processor to associate a disqualification identifier with the identifier of the at least one available vehicle.

22. The computer-implemented method of claim 21, wherein the LMW timing threshold of the LMW specification is based on a predetermined microbial baseline for a LM bulk product.

23. The computer-implemented method of claim 21, wherein the LM bulk product is bulk flour.

24. The computer-implemented method of claim 21, wherein the vehicle includes a flour transport vessel for holding the bulk flour.

25. The computer-implemented method of claim 21, wherein the LMW specification is obtained with the shipment request.

26. The computer-implemented method of claim 21, further comprising when the at least one available vehicle is not within the LMW timing threshold for the transport, scheduling a low microbial wash.

27. The computer-implemented method of claim 26, further comprising receiving an indication that the low microbial wash has been performed.

28. The computer-implemented method of claim 27, further comprising removing the disqualification identifier upon receiving the indication that the low microbial wash has been performed.

29. A computer-readable storage medium having computer executable instructions for transport scheduling of low microbial (LM) bulk products, the instructions comprising:

obtaining a vehicle transport period that is based on a shipping request;

comparing a low microbial wash (LMW) timing threshold of a LMW specification to a LMW record of a vehicle to determine whether the vehicle is within the LMW timing threshold for the vehicle transport period;

when the vehicle is within the LMW timing threshold for the vehicle transport period, updating a schedule of the vehicle to indicate availability of the vehicle for the shipping request; and

when the vehicle is not within the LMW timing threshold for the vehicle transport period, updating a schedule of the vehicle to indicate unavailability of the vehicle for the shipping request.

30. The computer-readable storage medium of claim 29, wherein the LMW timing threshold of the LMW specification is based on a predetermined microbial baseline for a LM bulk product.

31. The computer-readable storage medium of claim 30, wherein the LM bulk product is bulk flour.

32. The computer-readable storage medium of claim 31, wherein the vehicle includes a flour transport vessel for holding the bulk flour.

33. The computer-readable storage medium of claim 29, wherein the LMW specification is obtained with the shipping request.

34. The computer-readable storage medium of claim 29, wherein updating the schedule of the vehicle to indicate unavailability of the vehicle for the shipping request further includes scheduling a low microbial wash.

35. The computer-readable storage medium of claim 34, further comprising receiving an indication that the low microbial wash has been performed.

36. The computer-readable storage medium of claim 35 further comprising removing the indication of unavailability of the vehicle from the shipping request upon receiving the indication that the low microbial wash has been performed.

37. A system for transport scheduling of low microbial (LM) bulk products, the system comprising:

a processor;

a memory having computer-executable instructions stored thereon, wherein the computer-executable instructions are configured for:

obtaining a vehicle transport period that is based on a shipping request;

comparing a low microbial wash (LMW) timing threshold to a LMW record of a vehicle to determine whether the vehicle is within the LMW timing threshold for the vehicle transport period;

when the vehicle is within the LMW timing threshold for the vehicle transport period, updating a schedule of the vehicle to indicate availability of the vehicle for the shipping request; and

when the vehicle is not within the LMW timing threshold for the vehicle transport period, causing at least one member of a group comprising:

updating a schedule of the vehicle to indicate unavailability of the vehicle for the shipping request,

comparing the LMW timing threshold to a LMW record of another vehicle to determine whether the another vehicle is within the LMW timing threshold for the vehicle transport period, and

scheduling the vehicle for a LMW process prior to the vehicle transport period to cause availability of the vehicle for the shipping request.

38. The system of claim 37, wherein the LMW timing threshold of the LMW specification is based on a predetermined microbial baseline for a LM bulk product.

39. The system of claim 38, wherein the LM bulk product is bulk flour.

40. The system of claim 39, wherein the vehicle includes a flour transport vessel for holding the bulk flour.

41. A computer-implemented method comprising:

obtaining a shipping request for a low microbial (LM) bulk product, wherein the shipping request includes a requested receipt date and a product type identifier;

causing at least one processor to calculate a load-out date based on the receipt date;

causing the at least one processor to match the product type identifier of the shipping request to a LMW specification, wherein the LMW specification includes LMW process instructions and a LMW timing threshold, wherein the LMW timing threshold is based on a microbial baseline that indicates a microbial differential over time; and

sending a transport request to a shipping entity, wherein the shipping request includes an identification of the LMW specification to facilitate implementation of the LMW process instructions and the LMW timing threshold as a conditional factor during scheduling of a transport vehicle.

42. The computer-implemented method of claim 41, wherein the product type identifier indicates bulk flour.

43. The computer-implemented method of claim 41, wherein the product type identifier indicates at least one member of a group comprising: flour, bran, germ, grain, oat, rye, wheat, barley, sugar, spice, ground vegetable, ground pepper, and ground fruit.

44. The computer-implemented method of claim 41, wherein causing the at least one processor to match the product type identifier of the shipping request to the LMW specification further comprises:

querying a database, having a plurality of LMW specifications for a plurality of LM bulk product types, with the received product type identifier; and

obtaining a LMW specification among the plurality of LMW specifications that includes a product type identifier that matches the product type identifier of the query.

45. The computer-implemented method of claim 41, further comprising sending a load-out request to a load-out scheduling module, wherein the load-out request includes an identification of the LMW specification and the load-out date to facilitate preconditioning of the LM bulk product prior to load-out.

46. A computer-readable storage medium having computer executable instructions comprising:

receiving a shipping request for a low microbial (LM) bulk product, wherein the shipping request includes a product type identifier;

obtaining a low microbial wash (LMW) specification that matches the product type identifier, wherein the LMW specification includes LMW process instructions and a LMW timing threshold, wherein the LMW timing threshold is based on a microbial baseline that indicates a microbial differential over time; and

sending a transport request to a shipping entity, wherein the shipping request includes an identification of the LMW specification to facilitate implementation of the LMW process instructions and the LMW timing threshold as a conditional factor during scheduling of a transport vehicle.

47. The computer-readable storage medium of claim 46, wherein the product type identifier indicates bulk flour.

48. The computer-readable storage medium of claim 46, wherein the product type identifier indicates at least one member of a group comprising: flour, bran, germ, grain, oat, rye, wheat, barley, sugar, spice, ground vegetable, ground pepper, and ground fruit.

49. The computer-readable storage medium of claim 46, wherein obtaining the LMW specification that matches the product type identifier further comprises:

querying a database, having a plurality of LMW specifications for a plurality of LM bulk product types, with the received product type identifier; and

obtaining a LMW specification among the plurality of LMW specifications that includes a product type identifier that matches the product type identifier of the query.

50. The computer-readable storage medium of claim 46, wherein the shipping request further includes a requested receipt date.

51. The computer-readable storage medium of claim 50, further comprising calculating a load-out date based on the receipt date.

52. The computer-readable storage medium of claim 51, further comprising sending a load-out request to a load-out scheduling module, wherein the load-out request includes an identification of the LMW specification and the load-out date to facilitate preconditioning of the LM bulk product prior to load-out.

53. A system comprising:

at least one processor; and

at least one memory having computer executable instructions stored thereon, wherein the computer executable instruction are configured for:

receiving a shipping request for a low microbial (LM) bulk product, wherein the shipping request includes a requested receipt date and a product type identifier;

causing the processor to calculate a load-out date based on the receipt date;

causing the processor to match the product type identifier of the shipping request to a LMW specification, wherein the LMW specification includes LMW process

instructions and a LMW timing threshold, wherein the LMW timing threshold is based on wherein the LMW timing threshold is based on a microbial baseline that indicates a microbial differential over time; and

sending a transport request to a shipping entity, wherein the shipping request includes an identification of the LMW specification to facilitate implementation of the LMW process instructions and the LMW timing threshold as a conditional factor during scheduling of a transport vehicle.

54. The system of claim 53, wherein the product type identifier indicates bulk flour.

55. The system of claim 53, wherein the product type identifier indicates at least one member of a group comprising: flour, bran, germ, grain, oat, rye, wheat, barley, sugar, spice, ground vegetable, ground pepper, and ground fruit.

56. The system of claim 53, wherein causing the processor to match the product type identifier of the shipping request to the LMW specifications further comprises:

querying a database, having a plurality of LMW specifications for a plurality of LM bulk product types, with the received product type identifier; and

obtaining a LMW specification among the plurality of LMW specifications that includes a product type identifier that matches the product type identifier of the query.

57. The system of claim 53, further comprising sending a load-out request to a load-out scheduling module, wherein the load-out request includes an identification of the LMW specification and the load-out date to facilitate preconditioning of the LM bulk product prior to load-out.

58. A computer-readable storage medium having computer executable instructions for adjusting a low microbial (LM) bulk product for a product transport period having predicted environmental conditions, the instructions comprising:

determining a product transport period based on a shipping request;

obtaining predicted environmental conditions related to the product transport period;

determining optimal product conditions, for the LM bulk product, to be maintained during the product transport period;

receiving an indication of current product conditions of the LM bulk product;

determining whether the current product conditions require adjustment to maintain the optimal product conditions for the transport period having the predicted environmental conditions; and

when the current product conditions require adjustment to maintain the optimal product conditions for the transport period having the predicted environmental conditions, adjusting the current product conditions to a value that maintains the optimal product conditions during the transport period having the environmental conditions.

59. The computer-readable storage medium of claim 58, wherein the predicted environmental conditions include at least one member of a group comprising: a temperature value for the transport period along a transport path, and a humidity value for the transport period along a transport path.

60. The computer-readable storage medium of claim 59, wherein the optimal product conditions include at least one member of a group comprising: an optimal temperature to be maintained during the product transport period and an optimal moisture content to be maintained during the product transport period.

61. The computer-readable storage medium of claim 60, wherein the optimal product conditions are determined from a low microbial wash specification ("LMW") obtained from a database including a plurality of LMW specifications for a plurality of LM bulk product types.

62. The computer-readable storage medium of claim 58, wherein the current product conditions of the LM bulk product include at least one member of a group comprising: a current temperature and a current moisture content.

63. The computer-readable storage medium of claim 62, wherein adjusting the current product conditions to a value that maintains the optimal product conditions during the transport

period having the predicted environmental conditions includes at least one member of a group comprising: adjusting the temperature of the LM bulk product to a temperature that maintains an optimal product temperature during the transport period having a predicted environmental temperature, and adjusting the moisture content of the LM bulk product to a moisture content that maintains an optimal product moisture content during the transport period having a predicted environmental humidity.

64. The computer-readable storage medium of claim 63, wherein adjusting the current product conditions occurs prior to load-out.

65. The computer-readable storage medium of claim 63, wherein adjusting the current product conditions occurs during transport.

66. A computer-implemented method for adjusting a low microbial (LM) bulk product for a product transport period having predicted environmental conditions, the instructions comprising:

causing a processor to determine a product transport period based on a shipping request;

causing the processor to obtain predicted environmental conditions related to the product transport period;

causing the processor to determine optimal product conditions, for the LM bulk product, to be maintained during the product transport period;

receiving an indication of current product conditions of the LM bulk product;

causing the processor to determine whether the current product conditions require adjustment to maintain the optimal product conditions for the transport period having the predicted environmental conditions; and

when the current product condition values require adjustment to maintain the optimal product conditions for the transport period having the predicted environmental conditions, adjusting the current product conditions to a value that maintains the optimal product conditions during the transport period having the environmental conditions.

67. The computer-implemented method of claim 66, wherein the predicted environmental conditions include at least one member of a group comprising: a temperature value for the transport period along a transport path and a humidity value for the transport period along a transport path.

68. The computer-implemented method of claim 67, wherein the optimal product conditions include at least one member of a group comprising: an optimal temperature to be maintained during the product transport period and an optimal moisture content to be maintained during the product transport period.

69. The computer-implemented method of claim 68, wherein the optimal product conditions are determined from a low microbial wash specification ("LMW") obtained from a database including a plurality of LMW specifications for a plurality of LM bulk product types.

70. The computer-implemented method of claim 68, wherein the current product conditions of the LM bulk product include at least one member of a group comprising: a current temperature and a current moisture content.

71. The computer-implemented method of claim 70, wherein adjusting the current product conditions to a value that maintains the optimal product conditions during the transport period having the predicted environmental conditions includes at least one member of a group comprising: adjusting the temperature of the LM bulk product to a temperature that maintains an optimal product temperature during the transport period having a predicted environmental temperature and adjusting the moisture content of the LM bulk product to a moisture content that maintains an optimal product moisture content during the transport period having a predicted environmental humidity.

72. The computer-implemented method of claim 71, wherein adjusting the current product conditions occurs in association with at least one member of a group comprising: prior to load-out and during transport.

73. A system for adjusting a low microbial (LM) bulk product prior to a product transport period, the system comprising:

at least one LM bulk product condition sensor configured to monitor conditions of the LM bulk product;

at least one LM bulk product condition adjustor device configured to adjust current product condition values of the LM bulk product;

at least one processor; and

at least one memory having computer executable instructions stored thereon, wherein the computer executable instructions are configured for:

obtaining predicted environmental condition values related to a product transport period;

causing the at least one processor to determine optimal product condition values, for the LM bulk, to be maintained during the product transport period;

receiving current product condition values from at least one LM bulk product condition sensor;

cause the at least one processor to determining whether the current product condition values require adjustment to maintain the optimal product conditions for the transport period having the predicted environmental conditions; and

when the current product condition values require adjustment to maintain the optimal product conditions for the transport period having the predicted environmental conditions, causing the at least one processor to send an actuation signal to the at least one LM bulk product condition adjustor device to cause adjustment of the current product condition values to a value that maintains the optimal product conditions during the transport period having the environmental conditions.

74. The system of claim 73, wherein the predicted environmental conditions include at least one member of a group comprising: a temperature value for the transport period along a transport path and a humidity value for the transport period along a transport path.

75. The system of claim 74, wherein the optimal product conditions include at least one member of a group comprising: an optimal temperature to be maintained during the product

transport period and an optimal moisture content to be maintained during the product transport period.

76. The system of claim 75, wherein the current product conditions of the LM bulk product include at least one member of a group comprising: a current temperature and a current moisture content.

77. The system of claim 76, wherein adjusting the current product conditions to a value that maintains the optimal product conditions during the transport period having the predicted environmental conditions includes at least one member of a group comprising: adjusting the temperature of the LM bulk product to a temperature that maintains an optimal product temperature during the transport period having a predicted environmental temperature and adjusting the moisture content of the LM bulk product to a moisture content that maintains an optimal product moisture content during the transport period having a predicted environmental humidity.

UNITED STATES PATENT AND TRADEMARK OFFICE

Commissioner for Patents
United States Patent and Trademark Office
P.O. Box 1450
Alexandria, VA 22313-1450
www.uspto.gov

**ADVENT IP, P.C., L.L.O.**
**2425 SOUTH 144TH STREET**
**SUITE 202**
**OMAHA NE 68144-3282**

MAILED
FEB 01 2012
OFFICE OF PETITIONS

In re Application of:
Mariniello et al.
Application No. 13/010,458
Filed: January 20, 2011
Attorney Docket No. 15721.0734USU3

: DECISION ON REQUEST TO
: PARTICIPATE IN THE PATENT
: PROSECUTION HIGHWAY
: PROGRAM AND PETITION
: TO MAKE SPECIAL UNDER
: 37 CFR 1.102(a)

This is a decision on the request to participate in the PCT Patent Prosecution Highway (PCT-PPH) pilot program and the petition under 37 CFR 1.102(a), filed on October 19, 2011 to make the above-identified application special.

The request and petition are **GRANTED**.

**Discussion**

A grantable request to participate in the PCT-PPH pilot program and petition to make special require:

(1) The U.S. application must have an eligible relationship to one or more PCT applications where the ISA or IPEA are the JPO, EPO, KIPO, NPI, NBPR, or USPTO;

(2) At least one claim in the PCT application has novelty, inventive step, and industrial applicability and must be free of any observations in Box VIII in the latest work product in the international stage or applicant must identify and explain why the claim(s) is/are not subject to the observation in Box VIII;

(3) Applicant must submit a copy of the claim(s) from the PCT application(s) that have novelty, inventive step, and industrial applicability along with an English translation thereof and a statement that the English translation is accurate, if the claims are not in the English language;

(4) All the claims in the U.S. application must sufficiently correspond or be amended to sufficiently correspond to the claim(s) that have novelty, inventive step, and industrial applicability in the PCT application(s);

(5) Examination of the U.S. application has not begun;

(6) Applicant must submit a copy of the latest international work product from the PCT application indicating that the claim(s) have novelty, inventive step, and industrial applicability along with an English translation thereof and a statement that the English translation is accurate if the latest international work product is not in the English language;

(7) Applicant must submit an IDS listing the documents cited by the PCT examiner in the international work product along with copies of documents except U.S. patents or U.S. patent application publications.

The request to participate in the PCT-PPH pilot program and petition comply with the above requirements. Accordingly, the above-identified application has been accorded "special" status.

Further, according to USPTO records, Ryan Grace has a registration number of 52,956 not 52,596 as stated on form PTO/SB/20PCT-KR.

Telephone inquiries concerning this decision should be directed to Joan Olszewski at 571-272-7751.

All other inquiries concerning the examination or status of the application is accessible in the PAIR system at http://www.uspto.gov/ebc.index.html.

This application will be forwarded to the examiner for action on the merits commensurate with this decision once this application's formality reviews have been completed.

/dab/
David Bucci
Petitions Examiner
Office of Petitions

**Doc Code: PPH.PCT.652**
**Document Description: Petition to make special under PCT-Patent Pros Hwy**

PTO/SB/20PCT-KR (06-10)
Approved for use through 01/31/2012. OMB 0651-0058
U.S. Patent and Trademark Office; U. S. DEPARTMENT OF COMMERCE
Under the Paperwork Reduction Act of 1995, no persons are required to respond to a collection of information unless it displays a valid OMB control number.

# REQUEST FOR PARTICIPATION IN THE PATENT COOPERATION TREATY - PATENT PROSECUTION HIGHWAY (PCT-PPH) PILOT PROGRAM BETWEEN THE KOREAN INTELLECTUAL PROPERTY OFFICE (KIPO) AND THE USPTO

| | | | |
|---|---|---|---|
| Application No: | 13/010,480 | Filing date: | January 20, 2011 |
| First Named Inventor: | Robert Mariniello | | |
| Title of the Invention: | TRANSPORT SCHEDULING FOR LOW MICROBIAL BULK PRODUCTS | | |

**THIS REQUEST FOR PARTICIPATION IN THE PCT-PPH PILOT PROGRAM ALONG WITH THE REQUIRED DOCUMENTS MUST BE SUBMITTED VIA EFS-WEB. INFORMATION REGARDING EFS-WEB IS AVAILABLE AT HTTP://WWW.USPTO.GOV/EBC/EFS_HELP.HTML**

**APPLICANT HEREBY REQUESTS PARTICIPATION IN THE PCT-PPH PROGRAM AND PETITIONS TO MAKE THE ABOVE-IDENTIFIED APPLICATION SPECIAL UNDER THE PCT-PPH PROGRAM.**

The above-identified application is (1) a national stage entry of the corresponding PCT application, or (2) a national stage entry of another PCT application which claims priority to the corresponding PCT application, or (3) a national application that claims domestic/ foreign priority to the corresponding PCT application, or (4) a national application which forms the basis for the priority claim in the corresponding PCT application, or (5) a continuing application of a U.S. application that satisfies one of (1) to (4) above, or (6) a U.S. application that claims domestic benefit to a U.S. provisional application which forms the basis for the priority claim in the corresponding PCT application.

**The corresponding PCT application number(s) is/are:** PCT/US2011/021898

**The international filing date of the corresponding PCT application(s) is/are:**
January 20, 2011

**I. List of Required Documents:**

a. **A copy of the latest international work product (WO/ISA, WO/IPEA, or IPER) in the above-identified corresponding PCT application(s)**

☑ Is attached.

☐ Is not attached because the document is already in the U.S. application.

b. **A copy of all claims which were indicated as having novelty, inventive step and industrial applicability in the above-identified corresponding PCT application(s).**

☑ Is attached.

☐ Is not attached because the document is already in the U.S. application.

c. **English translations of the documents in a. and b. above are attached (if the documents are not in the English language). A statement that the English translation is accurate is attached for the document in b. above.**



This collection of information is required by 35 U.S.C. 119, 37 CFR 1.55, and 37 CFR 1.102(d). The information is required to obtain or retain a benefit by the public, which is to file (and by the USPTO to process) an application. Confidentiality is governed by 35 U.S.C. 122 and 37 CFR 1.11 and 1.14. This collection is estimated to take 2 hours to complete, including gathering, preparing, and submitting the completed application form to the USPTO. Time will vary depending upon the individual case. Any comments on the amount of time you require to complete this form and/or suggestions for reducing this burden should be sent to the Chief Information Officer, U.S. Patent and Trademark Office, U.S. Department of Commerce, P.O. Box 1450, Alexandria, VA 22313-1450. DO NOT SEND FEES OR COMPLETED FORMS TO THIS ADDRESS.

PTO/SB/20PCT-KR (06-10)
Approved for use through 01/31/2012. OMB 0651-0058
U.S.Patent and Trademark Office; U.S. DEPARTMENT OF COMMERCE
Under the Paperwork Reduction Act of 1995, no persons are required to respond to a collection of information unless it displays a valid OMB control number.

# REQUEST FOR PARTICIPATION IN THE PCT-PPH PILOT PROGRAM BETWEEN THE KIPO AND THE USPTO

(continued)

| | |
|---|---|
| Application No.: | 13/010,480 |
| First Named Inventor: | Robert Mariniello |

d. **(1) An information disclosure statement listing the documents cited in the international work products (ISR, WO/ISA, WO/IPEA, IPER) of the corresponding PCT application.**

☑ Is attached

☐ Has already been filed in the above-identified U.S. application on _____

**(2) Copies of all documents (except) for U.S. patents or U.S. patent application publications)**

☑ Are attached.

☐ Have already been filed in the above-identified U.S. application on _____

**II. Claims Correspondence Table:**

| Claims in US Application | Patentable Claims in the corresponding PCT Application | Explanation regarding the correspondence |
|---|---|---|
| 1 | 41 | Claim 1 in U.S. App. sufficiently corresponds to claim 41 in the corresponding PCT App. |
| 2 | 42 | Claim 2 in U.S. App. sufficiently corresponds to claim 42 in the corresponding PCT App. |
| 3 | 43 | Claim 3 in U.S. App. sufficiently corresponds to claim 43 in the corresponding PCT App. |
| 4 | 44 | Claim 4 in U.S. App. sufficiently corresponds to claim 44 in the corresponding PCT App. |
| 5 | 45 | Claim 5 in U.S. App. sufficiently corresponds to claim 45 in the corresponding PCT App. |
| 6 | 46 | Claim 6 in U.S. App. sufficiently corresponds to claim 46 in the corresponding PCT App. |
| 7 | 47 | Claim 7 in U.S. App. sufficiently corresponds to claim 47 in the corresponding PCT App. |
| 8 | 48 | Claim 8 in U.S. App. sufficiently corresponds to claim 48 in the corresponding PCT App. |
| 9 | 49 | Claim 9 in U.S. App. sufficiently corresponds to claim 49 in the corresponding PCT App. |
| 10 | 50 | Claim 10 in U.S. App. sufficiently corresponds to claim 50 in the corresponding PCT App. |
| 11 | 51 | Claim 11 in U.S. App. sufficiently corresponds to claim 51 in the corresponding PCT App. |
| 12 | 52 | Claim 12 in U.S. App. sufficiently corresponds to claim 52 in the corresponding PCT App. |
| 13 | 53 | Claim 13 in U.S. App. sufficiently corresponds to claim 53 in the corresponding PCT App. |
| 14 | 54 | Claim 14 in U.S. App. sufficiently corresponds to claim 54 in the corresponding PCT App. |
| 15 | 55 | Claim 15 in U.S. App. sufficiently corresponds to claim 55 in the corresponding PCT App. |
| 16 | 56 | Claim 16 in U.S. App. sufficiently corresponds to claim 56 in the corresponding PCT App. |
| 17 | 57 | Claim 17 in U.S. App. sufficiently corresponds to claim 57 in the corresponding PCT App. |
| | | |
| | | |

**III. All the claims in the US application sufficiently correspond to the patentable claims in the corresponding PCT application.**

| | |
|---|---|
| Signature /Ryan T. Grace/ | Date 10/19/2011 |
| Name (Print/Typed) Ryan T. Grace | Registration Number 52,956 |

## CLAIMS DETERMINED TO BE PATENTABLE BY KIPO

**NOTE: Only Claims 41-57 (denoted therein as Claims 1-17) were filed in this U.S. Application (13/010,480) and correspond to Claims 41-57 of the PCT Application. The remaining claims were filed in other U.S. Applications.**

1. A process comprising:

receiving, on a computing device, an indication that a low microbial (LM) bulk product vessel exceeds a low microbial wash (LMW) timing threshold;

causing the computing device to schedule a time for a LMW process;

at the time for the LMW process, causing the LMW process to be performed, wherein the LMW process includes:

removing vessel accessibility components from the LM bulk product vessel,

subjecting the vessel accessibility components to a sanitary solution bath,

securing spinners to hopper openings of the LM bulk product vessel,

subjecting the LM bulk product vessel to a rinse operation in association with a time threshold, wherein the rinse operation includes actuating the spinners by forcing hot water through the spinners to cause dispersion of the hot water within the interior of the LM bulk product vessel, and

actuating the spinners by forcing sanitary solution through the spinners to cause dispersion of the sanitary solution within the interior of the LM bulk product vessel; and

causing the computing device to update a LMW record for the LM bulk product vessel to indicate a completion date of the LMW process and to qualify the LM bulk product vessel for transporting an LM bulk product.

2. The process of claim 1, wherein the time threshold is at least 15 consecutive minutes and the hot water is at a temperature from about 140°F to about 215°F.

3. The process of claim 1, wherein the sanitary solution bath is an ammonia based sanitizer at a concentration from about 150 ppm to about 450 ppm.

4. The process of claim 1, wherein the sanitary solution bath is a benzalkonium chloride compound at a concentration from about 150 ppm to about 450 ppm.

5. The process of claim 1, wherein the LM bulk product vessel is a LM bulk flour vessel located on a road vehicle.

6. The process of claim 1, wherein the vehicle accessibility components include at least one member of a group comprising: valves, caps, gaskets, lids, product lines and screens.

7. A process comprising:

receiving an indication that a low microbial (LM) bulk product vessel exceeds a low microbial wash (LMW) timing threshold;

in response to the indication, causing a LMW process to be performed, wherein the LMW process includes:

removing vessel accessibility components from the LM bulk product vessel,

subjecting the vessel accessibility components to a sanitary solution bath,

securing spinners to hopper openings of the LM bulk product vessel, and

actuating the spinners by forcing sanitary solution through the spinners to cause dispersion of the sanitary solution within the interior of the LM bulk product vessel; and

updating a LMW record for the LM bulk product vessel to indicate a completion date of the LMW process.

8. The process of claim 7, further comprising, after securing the spinners to the hopper openings, subjecting the LM bulk product vessel to a rinse operation in association with a time threshold, wherein the rinse operation includes actuating the spinners by forcing hot water through the spinners to cause dispersion of the hot water within the interior of the LM bulk product vessel.

9. The process of claim 8, wherein the time threshold is at least 15 consecutive minutes and the hot water is at a temperature from about 140°F to about 215°F.

10. The process of claim 7, wherein the sanitary solution bath is an ammonia based sanitizer at a concentration from about 150 ppm to about 450 ppm.

11. The process of claim 7, wherein the sanitary solution bath is a benzalkonium chloride compound at a concentration from about 150 ppm to about 450 ppm.

12. The process of claim 7, wherein the LM bulk product vessel is a LM bulk flour vessel located on a road vehicle.

13. The process of claim 7, wherein the vehicle accessibility components include at least one member of a group comprising: valves, caps, gaskets, lids, product lines and screens.

14. The process of claim 7, wherein causing a LMW process to be performed includes causing a computing device to schedule the LMW process.

15. The process of claim 7, wherein updating the LMW record includes causing a computing device to qualify the LM bulk product vessel for transporting an LM bulk product.

16. A process comprising:

receiving a transportation request for the shipment of a low microbial (LM) bulk product;

determining a vehicle transport period based on the transportation request;

identifying an available vehicle for the transportation period;

obtaining a low microbial wash (LMW) timing threshold;

comparing the LMW timing threshold to a LMW wash record for the available vehicle to determine whether the LMW record for the available vehicle is within the LMW timing threshold for the transport period;

when the LMW record for the available vehicle is within the LMW timing threshold for the transport period, qualifying the available vehicle for the shipment of the LM bulk product; and

when the LMW record for the available vehicle is not within the LMW timing threshold for the transport period, causing a LMW process to be performed, wherein the LMW process includes:

removing vessel accessibility components from the vehicle,

subjecting the vessel accessibility components to a sanitary solution bath,

securing spinners to hopper openings of the vehicle,

actuating the spinners by forcing sanitary solution through the spinners to cause dispersion of the sanitary solution within the interior of the vehicle, and

qualifying the vehicle for the shipment of the LM bulk product.

17. The process of claim 16, wherein the time threshold is at least 15 consecutive minutes and the hot water is at a temperature from about 140°F to about 215°F.

18. The process of claim 16, wherein the sanitary solution bath is an ammonia based sanitizer at a concentration from about 150 ppm to about 450 ppm.

19. The process of claim 16, wherein the sanitary solution bath is a benzalkonium chloride compound at a concentration from about 150 ppm to about 450 ppm.

20. The process of claim 16, wherein the LM bulk product vessel is a LM bulk flour vessel located on a road vehicle.

21. A computer-implemented method for transport scheduling of low microbial (LM) bulk products, the computer-implemented method comprising:

receiving a LM bulk product shipment request, wherein the shipment request includes a load-out date value and a receipt date value;

causing a processor to calculate a vehicle transport period based on the load-out date value and the receipt date value;

accessing a transport schedule to determine at least one available vehicle for the calculated vehicle transport period;

comparing a low microbial wash (LMW) timing threshold to a LMW record for the at least one available vehicle to determine whether the at least one available vehicle is within the LMW timing threshold for the transport period;

when the at least one available vehicle is within the LMW timing threshold for the transport period, causing the processor to associate a qualification identifier with an identifier of the at least one available vehicle; and

when the at least one available vehicle is not within the LMW timing threshold for the transport period, causing that at least one processor to associate a disqualification identifier with the identifier of the at least one available vehicle.

22. The computer-implemented method of claim 21, wherein the LMW timing threshold of the LMW specification is based on a predetermined microbial baseline for a LM bulk product.

23. The computer-implemented method of claim 21, wherein the LM bulk product is bulk flour.

24. The computer-implemented method of claim 21, wherein the vehicle includes a flour transport vessel for holding the bulk flour.

25. The computer-implemented method of claim 21, wherein the LMW specification is obtained with the shipment request.

26. The computer-implemented method of claim 21, further comprising when the at least one available vehicle is not within the LMW timing threshold for the transport, scheduling a low microbial wash.

27. The computer-implemented method of claim 26, further comprising receiving an indication that the low microbial wash has been performed.

28. The computer-implemented method of claim 27, further comprising removing the disqualification identifier upon receiving the indication that the low microbial wash has been performed.

29. A computer-readable storage medium having computer executable instructions for transport scheduling of low microbial (LM) bulk products, the instructions comprising:

obtaining a vehicle transport period that is based on a shipping request;

comparing a low microbial wash (LMW) timing threshold of a LMW specification to a LMW record of a vehicle to determine whether the vehicle is within the LMW timing threshold for the vehicle transport period;

when the vehicle is within the LMW timing threshold for the vehicle transport period, updating a schedule of the vehicle to indicate availability of the vehicle for the shipping request; and

when the vehicle is not within the LMW timing threshold for the vehicle transport period, updating a schedule of the vehicle to indicate unavailability of the vehicle for the shipping request.

30. The computer-readable storage medium of claim 29, wherein the LMW timing threshold of the LMW specification is based on a predetermined microbial baseline for a LM bulk product.

31. The computer-readable storage medium of claim 30, wherein the LM bulk product is bulk flour.

32. The computer-readable storage medium of claim 31, wherein the vehicle includes a flour transport vessel for holding the bulk flour.

33. The computer-readable storage medium of claim 29, wherein the LMW specification is obtained with the shipping request.

34. The computer-readable storage medium of claim 29, wherein updating the schedule of the vehicle to indicate unavailability of the vehicle for the shipping request further includes scheduling a low microbial wash.

35. The computer-readable storage medium of claim 34, further comprising receiving an indication that the low microbial wash has been performed.

36. The computer-readable storage medium of claim 35 further comprising removing the indication of unavailability of the vehicle from the shipping request upon receiving the indication that the low microbial wash has been performed.

37. A system for transport scheduling of low microbial (LM) bulk products, the system comprising:

a processor;

a memory having computer-executable instructions stored thereon, wherein the computer-executable instructions are configured for:

obtaining a vehicle transport period that is based on a shipping request;

comparing a low microbial wash (LMW) timing threshold to a LMW record of a vehicle to determine whether the vehicle is within the LMW timing threshold for the vehicle transport period;

when the vehicle is within the LMW timing threshold for the vehicle transport period, updating a schedule of the vehicle to indicate availability of the vehicle for the shipping request; and

when the vehicle is not within the LMW timing threshold for the vehicle transport period, causing at least one member of a group comprising:

updating a schedule of the vehicle to indicate unavailability of the vehicle for the shipping request,

comparing the LMW timing threshold to a LMW record of another vehicle to determine whether the another vehicle is within the LMW timing threshold for the vehicle transport period, and

scheduling the vehicle for a LMW process prior to the vehicle transport period to cause availability of the vehicle for the shipping request.

38. The system of claim 37, wherein the LMW timing threshold of the LMW specification is based on a predetermined microbial baseline for a LM bulk product.

39. The system of claim 38, wherein the LM bulk product is bulk flour.

40. The system of claim 39, wherein the vehicle includes a flour transport vessel for holding the bulk flour.

41. A computer-implemented method comprising:

obtaining a shipping request for a low microbial (LM) bulk product, wherein the shipping request includes a requested receipt date and a product type identifier;

causing at least one processor to calculate a load-out date based on the receipt date;

causing the at least one processor to match the product type identifier of the shipping request to a LMW specification, wherein the LMW specification includes LMW process instructions and a LMW timing threshold, wherein the LMW timing threshold is based on a microbial baseline that indicates a microbial differential over time; and

sending a transport request to a shipping entity, wherein the shipping request includes an identification of the LMW specification to facilitate implementation of the LMW process instructions and the LMW timing threshold as a conditional factor during scheduling of a transport vehicle.

42. The computer-implemented method of claim 41, wherein the product type identifier indicates bulk flour.

43. The computer-implemented method of claim 41, wherein the product type identifier indicates at least one member of a group comprising: flour, bran, germ, grain, oat, rye, wheat, barley, sugar, spice, ground vegetable, ground pepper, and ground fruit.

44. The computer-implemented method of claim 41, wherein causing the at least one processor to match the product type identifier of the shipping request to the LMW specification further comprises:

querying a database, having a plurality of LMW specifications for a plurality of LM bulk product types, with the received product type identifier; and

obtaining a LMW specification among the plurality of LMW specifications that includes a product type identifier that matches the product type identifier of the query.

45. The computer-implemented method of claim 41, further comprising sending a load-out request to a load-out scheduling module, wherein the load-out request includes an identification of the LMW specification and the load-out date to facilitate preconditioning of the LM bulk product prior to load-out.

46. A computer-readable storage medium having computer executable instructions comprising:

receiving a shipping request for a low microbial (LM) bulk product, wherein the shipping request includes a product type identifier;

obtaining a low microbial wash (LMW) specification that matches the product type identifier, wherein the LMW specification includes LMW process instructions and a LMW timing threshold, wherein the LMW timing threshold is based on a microbial baseline that indicates a microbial differential over time; and

sending a transport request to a shipping entity, wherein the shipping request includes an identification of the LMW specification to facilitate implementation of the LMW process instructions and the LMW timing threshold as a conditional factor during scheduling of a transport vehicle.

47. The computer-readable storage medium of claim 46, wherein the product type identifier indicates bulk flour.

48. The computer-readable storage medium of claim 46, wherein the product type identifier indicates at least one member of a group comprising: flour, bran, germ, grain, oat, rye, wheat, barley, sugar, spice, ground vegetable, ground pepper, and ground fruit.

49. The computer-readable storage medium of claim 46, wherein obtaining the LMW specification that matches the product type identifier further comprises:

querying a database, having a plurality of LMW specifications for a plurality of LM bulk product types, with the received product type identifier; and

obtaining a LMW specification among the plurality of LMW specifications that includes a product type identifier that matches the product type identifier of the query.

50. The computer-readable storage medium of claim 46, wherein the shipping request further includes a requested receipt date.

51. The computer-readable storage medium of claim 50, further comprising calculating a load-out date based on the receipt date.

52. The computer-readable storage medium of claim 51, further comprising sending a load-out request to a load-out scheduling module, wherein the load-out request includes an identification of the LMW specification and the load-out date to facilitate preconditioning of the LM bulk product prior to load-out.

53. A system comprising:

at least one processor; and

at least one memory having computer executable instructions stored thereon, wherein the computer executable instruction are configured for:

receiving a shipping request for a low microbial (LM) bulk product, wherein the shipping request includes a requested receipt date and a product type identifier;

causing the processor to calculate a load-out date based on the receipt date;

causing the processor to match the product type identifier of the shipping request to a LMW specification, wherein the LMW specification includes LMW process

instructions and a LMW timing threshold, wherein the LMW timing threshold is based on wherein the LMW timing threshold is based on a microbial baseline that indicates a microbial differential over time; and

sending a transport request to a shipping entity, wherein the shipping request includes an identification of the LMW specification to facilitate implementation of the LMW process instructions and the LMW timing threshold as a conditional factor during scheduling of a transport vehicle.

54. The system of claim 53, wherein the product type identifier indicates bulk flour.

55. The system of claim 53, wherein the product type identifier indicates at least one member of a group comprising: flour, bran, germ, grain, oat, rye, wheat, barley, sugar, spice, ground vegetable, ground pepper, and ground fruit.

56. The system of claim 53, wherein causing the processor to match the product type identifier of the shipping request to the LMW specifications further comprises:

querying a database, having a plurality of LMW specifications for a plurality of LM bulk product types, with the received product type identifier; and

obtaining a LMW specification among the plurality of LMW specifications that includes a product type identifier that matches the product type identifier of the query.

57. The system of claim 53, further comprising sending a load-out request to a load-out scheduling module, wherein the load-out request includes an identification of the LMW specification and the load-out date to facilitate preconditioning of the LM bulk product prior to load-out.

58. A computer-readable storage medium having computer executable instructions for adjusting a low microbial (LM) bulk product for a product transport period having predicted environmental conditions, the instructions comprising:

determining a product transport period based on a shipping request;

obtaining predicted environmental conditions related to the product transport period;

determining optimal product conditions, for the LM bulk product, to be maintained during the product transport period;

receiving an indication of current product conditions of the LM bulk product;

determining whether the current product conditions require adjustment to maintain the optimal product conditions for the transport period having the predicted environmental conditions; and

when the current product conditions require adjustment to maintain the optimal product conditions for the transport period having the predicted environmental conditions, adjusting the current product conditions to a value that maintains the optimal product conditions during the transport period having the environmental conditions.

59. The computer-readable storage medium of claim 58, wherein the predicted environmental conditions include at least one member of a group comprising: a temperature value for the transport period along a transport path, and a humidity value for the transport period along a transport path.

60. The computer-readable storage medium of claim 59, wherein the optimal product conditions include at least one member of a group comprising: an optimal temperature to be maintained during the product transport period and an optimal moisture content to be maintained during the product transport period.

61. The computer-readable storage medium of claim 60, wherein the optimal product conditions are determined from a low microbial wash specification ("LMW") obtained from a database including a plurality of LMW specifications for a plurality of LM bulk product types.

62. The computer-readable storage medium of claim 58, wherein the current product conditions of the LM bulk product include at least one member of a group comprising: a current temperature and a current moisture content.

63. The computer-readable storage medium of claim 62, wherein adjusting the current product conditions to a value that maintains the optimal product conditions during the transport

period having the predicted environmental conditions includes at least one member of a group comprising: adjusting the temperature of the LM bulk product to a temperature that maintains an optimal product temperature during the transport period having a predicted environmental temperature, and adjusting the moisture content of the LM bulk product to a moisture content that maintains an optimal product moisture content during the transport period having a predicted environmental humidity.

64. The computer-readable storage medium of claim 63, wherein adjusting the current product conditions occurs prior to load-out.

65. The computer-readable storage medium of claim 63, wherein adjusting the current product conditions occurs during transport.

66. A computer-implemented method for adjusting a low microbial (LM) bulk product for a product transport period having predicted environmental conditions, the instructions comprising:

causing a processor to determine a product transport period based on a shipping request;

causing the processor to obtain predicted environmental conditions related to the product transport period;

causing the processor to determine optimal product conditions, for the LM bulk product, to be maintained during the product transport period;

receiving an indication of current product conditions of the LM bulk product;

causing the processor to determine whether the current product conditions require adjustment to maintain the optimal product conditions for the transport period having the predicted environmental conditions; and

when the current product condition values require adjustment to maintain the optimal product conditions for the transport period having the predicted environmental conditions, adjusting the current product conditions to a value that maintains the optimal product conditions during the transport period having the environmental conditions.

67. The computer-implemented method of claim 66, wherein the predicted environmental conditions include at least one member of a group comprising: a temperature value for the transport period along a transport path and a humidity value for the transport period along a transport path.

68. The computer-implemented method of claim 67, wherein the optimal product conditions include at least one member of a group comprising: an optimal temperature to be maintained during the product transport period and an optimal moisture content to be maintained during the product transport period.

69. The computer-implemented method of claim 68, wherein the optimal product conditions are determined from a low microbial wash specification ("LMW") obtained from a database including a plurality of LMW specifications for a plurality of LM bulk product types.

70. The computer-implemented method of claim 68, wherein the current product conditions of the LM bulk product include at least one member of a group comprising: a current temperature and a current moisture content.

71. The computer-implemented method of claim 70, wherein adjusting the current product conditions to a value that maintains the optimal product conditions during the transport period having the predicted environmental conditions includes at least one member of a group comprising: adjusting the temperature of the LM bulk product to a temperature that maintains an optimal product temperature during the transport period having a predicted environmental temperature and adjusting the moisture content of the LM bulk product to a moisture content that maintains an optimal product moisture content during the transport period having a predicted environmental humidity.

72. The computer-implemented method of claim 71, wherein adjusting the current product conditions occurs in association with at least one member of a group comprising: prior to load-out and during transport.

73. A system for adjusting a low microbial (LM) bulk product prior to a product transport period, the system comprising:

at least one LM bulk product condition sensor configured to monitor conditions of the LM bulk product;

at least one LM bulk product condition adjustor device configured to adjust current product condition values of the LM bulk product;

at least one processor; and

at least one memory having computer executable instructions stored thereon, wherein the computer executable instructions are configured for:

obtaining predicted environmental condition values related to a product transport period;

causing the at least one processor to determine optimal product condition values, for the LM bulk, to be maintained during the product transport period;

receiving current product condition values from at least one LM bulk product condition sensor;

cause the at least one processor to determining whether the current product condition values require adjustment to maintain the optimal product conditions for the transport period having the predicted environmental conditions; and

when the current product condition values require adjustment to maintain the optimal product conditions for the transport period having the predicted environmental conditions, causing the at least one processor to send an actuation signal to the at least one LM bulk product condition adjustor device to cause adjustment of the current product condition values to a value that maintains the optimal product conditions during the transport period having the environmental conditions.

74. The system of claim 73, wherein the predicted environmental conditions include at least one member of a group comprising: a temperature value for the transport period along a transport path and a humidity value for the transport period along a transport path.

75. The system of claim 74, wherein the optimal product conditions include at least one member of a group comprising: an optimal temperature to be maintained during the product

transport period and an optimal moisture content to be maintained during the product transport period.

76. The system of claim 75, wherein the current product conditions of the LM bulk product include at least one member of a group comprising: a current temperature and a current moisture content.

77. The system of claim 76, wherein adjusting the current product conditions to a value that maintains the optimal product conditions during the transport period having the predicted environmental conditions includes at least one member of a group comprising: adjusting the temperature of the LM bulk product to a temperature that maintains an optimal product temperature during the transport period having a predicted environmental temperature and adjusting the moisture content of the LM bulk product to a moisture content that maintains an optimal product moisture content during the transport period having a predicted environmental humidity.

UNITED STATES PATENT AND TRADEMARK OFFICE

Commissioner for Patents
United States Patent and Trademark Office
P.O. Box 1450
Alexandria, VA 22313-1450
www.uspto.gov

**ADVENT IP, P.C., L.L.O.**
**2425 SOUTH 144TH STREET**
**SUITE 202**
**OMAHA NE 68144-3282**

MAILED
FEB 01 2012
OFFICE OF PETITIONS

In re Application of:
Mariniello et al.
Application No. 13/010,480
Filed: January 20, 2011
Attorney Docket No. 15721.0734USU4

: DECISION ON REQUEST TO
: PARTICIPATE IN THE PATENT
: PROSECUTION HIGHWAY
: PROGRAM AND PETITION
: TO MAKE SPECIAL UNDER
: 37 CFR 1.102(a)

This is a decision on the request to participate in the PCT Patent Prosecution Highway (PCT-PPH) pilot program and the petition under 37 CFR 1.102(a), filed on October 19, 2011 to make the above-identified application special.

The request and petition are **GRANTED**.

**Discussion**

A grantable request to participate in the PCT-PPH pilot program and petition to make special require:

(1) The U.S. application must have an eligible relationship to one or more PCT applications where the ISA or IPEA are the JPO, EPO, KIPO, NPI, NBPR, or USPTO;

(2) At least one claim in the PCT application has novelty, inventive step, and industrial applicability and must be free of any observations in Box VIII in the latest work product in the international stage or applicant must identify and explain why the claim(s) is/are not subject to the observation in Box VIII;

(3) Applicant must submit a copy of the claim(s) from the PCT application(s) that have novelty, inventive step, and industrial applicability along with an English translation thereof and a statement that the English translation is accurate, if the claims are not in the English language;

(4) All the claims in the U.S. application must sufficiently correspond or be amended to sufficiently correspond to the claim(s) that have novelty, inventive step, and industrial applicability in the PCT application(s);

(5) Examination of the U.S. application has not begun;

(6) Applicant must submit a copy of the latest international work product from the PCT application indicating that the claim(s) have novelty, inventive step, and industrial applicability along with an English translation thereof and a statement that the English translation is accurate if the latest international work product is not in the English language;

(7) Applicant must submit an IDS listing the documents cited by the PCT examiner in the international work product along with copies of documents except U.S. patents or U.S. patent application publications.

The request to participate in the PCT-PPH pilot program and petition comply with the above requirements. Accordingly, the above-identified application has been accorded "special" status.

Telephone inquiries concerning this decision should be directed to Joan Olszewski at 571-272-7751.

All other inquiries concerning the examination or status of the application is accessible in the PAIR system at http://www.uspto.gov/ebc.index.html.

This application will be forwarded to the examiner for action on the merits commensurate with this decision once this application's formality reviews have been completed.

/dab/
David Bucci
Petitions Examiner
Office of Petitions

UNITED STATES PATENT AND TRADEMARK OFFICE

Commissioner for Patents
United States Patent and Trademark Office
P.O. Box 1450
Alexandria, VA 22313-1450
www.uspto.gov

UNGARETTI & HARRIS LLP
INTELLECTUAL PROPERTY
GROUP - PATENTS
70 WEST MADISON STREET
SUITE 3500
CHICAGO IL 60602-4224

MAILED

AUG 15 2011

OFFICE OF PETITIONS

In re Application of :
Michalk, et al. : DECISION ON PETITION
Application No. 13/010,489 :
Filed/Deposited: 20 January, 2011 :
Attorney Docket No. 1004018-7003 :

This is a decision on the petition filed on 4 August, 2011, pursuant to 37 C.F.R. §1.47.

**NOTE:**

It appears that the address identified for the non-signing inventor is other than that originally listed on the oath/declaration.

If this indeed is the case, Petitioner will wish to submit an updated application data sheet (ADS) to correct this information in the record of the application.

The petition as considered pursuant to 37 C.F.R. §1.47(a) is **GRANTED**.

A grantable petition pursuant to 37 C.F.R. §1.47(a) requires: (1) petition and fee; (2) proof that the non-signing inventor cannot be reached or refuses to sign the oath or declaration after having been presented with the application papers (specification: description, claims and drawings); (3) an acceptable oath or declaration in compliance with 35 U.S.C. §§ 115 and 116; and (4) a statement of the last known address of the non-signing inventor(s)—with diligence in the effort to ascertain the validity of the address set forth as the reasonably believed to be last known/current/valid address.

*Petitioners always are reminded that for transmission by Email of any document to be accepted by the Office, written acknowledgment of receipt and readability of the message and all applicable attachments of required materials must be provided.*

## BACKGROUND

The record reflects as follows:

The application was deposited on 20 January, 2011, without, *inter alia*, a fully executed oath/declaration.

On 4 February, 2011, the Office mailed a Notice of Missing Parts requiring, inter alia, a fully-executed oath/declaration.

On 4 August, 2011, Petitioner Richard Himelhoch (Reg. No. 35,544) filed, *inter alia*, a request and fee for extension of time, a petition pursuant to the regulations at 37 C.F.R. §1.47, with an oath/declaration executed by co-inventors Michalk, Katz and Duchesne for themselves and on behalf of non-signing co-inventor Marc Bacon (Mr. Bacon), with a statement by Petitioner of transmittal (with copies of supporting transmittal documents) of the entire application (description, claims, abstract drawings) to a valid/current/reasonably believed to be last known mailing address for the non-signing inventor, who thereafter constructively refused to sign/join. Therefore, it appears that Petitioner provided a showing satisfying the requirements under the Rule to wit: showing/proof that the non-signing inventor actually and/or constructively refused to sign the oath or declaration after having been presented with the application papers (specification: description, claims and drawings); an acceptable oath or declaration in compliance with 35 U.S.C. §§ 115 and 116; and a statement of the last known address of the non-signing inventor(s)—with diligence in the effort to ascertain the validity of the address set forth as the reasonably believed to be last known/current/valid address. Thus, Petitioner sought to satisfy the requirements pursuant to the Rule and the guidance in the Commentary at MPEP §409.03, and §409.03(a) et seq.), and provide a showing that the non-signing inventor could not be found/refused to sign after diligent effort.

The availability of applications and application papers online to applicants/practitioners who diligently associate their Customer Number with the respective application(s) now provides an applicant/practitioner on-demand information as to events/transactions in an application.

Out of an abundance of caution, Petitioners always are reminded that those registered to practice and all others who make representations before the Office **must** inquire into the underlying facts of representations made to the Office and support averments with the appropriate documentation–since all owe to the Office the continuing duty to disclose.[1]

---

[1] See supplement of 17 June, 1999. The Patent and Trademark Office is relying on petitioner's duty of candor and good faith and accepting a statement made by Petitioner. See Changes to Patent Practice and Procedure, 62 Fed. Reg. at 53160 and 53178, 1203 Off. Gaz. Pat. Office at 88 and 103 (responses to comments 64 and 109)(applicant obligated under 37 C.F.R. §11.18, formerly §10.18 to inquire into the underlying facts and circumstances when providing statements to the Patent and Trademark Office).

## CONCLUSION

The instant petition under 37 C.F.R. §1.47(a) is **granted** (status is accorded pursuant to 37 C.F.R. §1.47(a).)

As provided in 37 C.F.R. §1.47(c), this Office will forward notice of this application's filing to the non-signing inventors at the addresses given in the petition. Notice of the filing of this application will also be published in the Official Gazette.

The instant application is released to the Office of Patent Application Processing (OPAP) for such processing as required in due course.

Telephone inquiries regarding this decision may be directed to the undersigned at (571) 272-3214—it is noted, however, that all practice before the Office is in writing (see: 37 C.F.R. §1.2[2]) and the proper authority for action on any matter in this regard are the statutes (35 U.S.C.), regulations (37 C.F.R.) and the commentary on policy (MPEP). Therefore, no telephone discussion may be controlling or considered authority for Petitioner's action(s).

/John J. Gillon, Jr./
John J. Gillon, Jr.
Senior Attorney
Office of Petitions

---

[2] The regulations at 37 C.F.R. §1.2 provide:

**§1.2 Business to be transacted in writing.**

All business with the Patent and Trademark Office should be transacted in writing. The personal attendance of applicants or their attorneys or agents at the Patent and Trademark Office is unnecessary. The action of the Patent and Trademark Office will be based exclusively on the written record in the Office. No attention will be paid to any alleged oral promise, stipulation, or understanding in relation to which there is disagreement or doubt

UNITED STATES PATENT AND TRADEMARK OFFICE

Commissioner for Patents
United States Patent and Trademark Office
P.O. Box 1450
Alexandria, VA 22313-1450
www.uspto.gov

MARC BACON
72 HARTSMERE DRIVE
KANATA-SITTSVILLE
ONTARIO
K2S 2BJ
CANADA

MAILED
AUG 15 2011
OFFICE OF PETITIONS

In re Application of :
Michalk, et al. : COMMUNICATION
Application No. 13/010,489 :
Filed/Deposited: 20 January, 2011 :
Attorney Docket No. 1004018-7003 :

Dear Marc Bacon:

You are named as an inventor in the above-identified United States patent application, filed under the provisions of 35 U.S.C. §116 (United States Code), and 37 C.F.R. §1.47 (Code of Federal Regulations), Rules of Practice in Patent Cases. Should a patent be granted on the application you will be designated therein as an inventor.

As a named inventor you are entitled to inspect any paper in the file wrapper of the application, order copies of all or any part thereof (at a prepaid cost per 37 C.F.R. §1.19) or make your position of record in the application. Alternatively, you may arrange to do any of the preceding through a registered patent attorney or agent presenting written authorization from you. If you care to join the application, counsel of record (see below) would presumably assist you. Joining the application would entail the filing of an appropriate oath or declaration by you pursuant to 37 C.F.R. §1.63.

Should you elect to join in the application, the contact information for Counsel of Record is set forth at the end of this Communication.

Should you seek to identify independent Counsel, you may find the Patent Attorneys/Agents Search engine of assistance (https://oedci.uspto.gov/OEDCI/ ).

Requests for information regarding your application should be directed to the File Information Unit at (703) 308-2733. Information regarding how to pay for and order a copy of the application, or a specific paper in the application, should be directed to the Certification Division at (571) 272-3150 or 1 (800) 972-6382 (outside the Washington, DC area).

Telephone inquiries regarding this communication may be directed to the undersigned at (571) 272-3214—it is noted, however, that all practice before the Office is in writing (see: 37 C.F.R. §1.2[1]) and the proper authority for action on any matter in this regard are the statutes (35 U.S.C.), regulations (37 C.F.R.) and the commentary on policy (MPEP). Therefore, no telephone discussion may be controlling or considered authority for Petitioner's/your action(s) and/or inactions. Moreover, the Office can neither advise you nor recommend Counsel in this matter.

/John J. Gillon, Jr./
John J. Gillon, Jr.
Senior Attorney
Office of Petitions

Counsel of Record:
UNGARETTI & HARRIS LLP
INTELLECTUAL PROPERTY
GROUP - PATENTS
70 WEST MADISON STREET
SUITE 3500
CHICAGO IL 60602-4224

[1] The regulations at 37 C.F.R. §1.2 provide:
**§1.2 Business to be transacted in writing.**
All business with the Patent and Trademark Office should be transacted in writing. The personal attendance of applicants or their attorneys or agents at the Patent and Trademark Office is unnecessary. The action of the Patent and Trademark Office will be based exclusively on the written record in the Office. No attention will be paid to any alleged oral promise, stipulation, or understanding in relation to which there is disagreement or doubt

**Doc Code: PPH.PCT.652**
**Document Description: Petition to make special under PCT-Patent Pros Hwy**

PTO/SB/20PCT-KR (06-10)
Approved for use through 01/31/2012. OMB 0651-0058
U.S. Patent and Trademark Office; U. S. DEPARTMENT OF COMMERCE
Under the Paperwork Reduction Act of 1995, no persons are required to respond to a collection of information unless it displays a valid OMB control number.

# REQUEST FOR PARTICIPATION IN THE PATENT COOPERATION TREATY - PATENT PROSECUTION HIGHWAY (PCT-PPH) PILOT PROGRAM BETWEEN THE KOREAN INTELLECTUAL PROPERTY OFFICE (KIPO) AND THE USPTO

| | | | |
|---|---|---|---|
| Application No: | 13/010,511 | Filing date: | January 20, 2011 |
| First Named Inventor: | Robert Mariniello | | |
| Title of the Invention: | TRANSPORT SCHEDULING FOR LOW MICROBIAL BULK PRODUCTS | | |

**THIS REQUEST FOR PARTICIPATION IN THE PCT-PPH PILOT PROGRAM ALONG WITH THE REQUIRED DOCUMENTS MUST BE SUBMITTED VIA EFS-WEB. INFORMATION REGARDING EFS-WEB IS AVAILABLE AT HTTP://WWW.USPTO.GOV/EBC/EFS_HELP.HTML**

**APPLICANT HEREBY REQUESTS PARTICIPATION IN THE PCT-PPH PROGRAM AND PETITIONS TO MAKE THE ABOVE-IDENTIFIED APPLICATION SPECIAL UNDER THE PCT-PPH PROGRAM.**

The above-identified application is (1) a national stage entry of the corresponding PCT application, or (2) a national stage entry of another PCT application which claims priority to the corresponding PCT application, or (3) a national application that claims domestic/ foreign priority to the corresponding PCT application, or (4) a national application which forms the basis for the priority claim in the corresponding PCT application, or (5) a continuing application of a U.S. application that satisfies one of (1) to (4) above, or (6) a U.S. application that claims domestic benefit to a U.S. provisional application which forms the basis for the priority claim in the corresponding PCT application.

**The corresponding PCT application number(s) is/are:** PCT/US2011/021898

**The international filing date of the corresponding PCT application(s) is/are:**
January 20, 2011

**I. List of Required Documents:**

a. **A copy of the latest international work product (WO/ISA, WO/IPEA, or IPER) in the above–identified corresponding PCT application(s)**

☑ Is attached.

☐ Is not attached because the document is already in the U.S. application.

b. **A copy of all claims which were indicated as having novelty, inventive step and industrial applicability in the above-identified corresponding PCT application(s).**

☑ Is attached.

☐ Is not attached because the document is already in the U.S. application.

c. **English translations of the documents in a. and b. above are attached (if the documents are not in the English language). A statement that the English translation is accurate is attached for the document in b. above.**



This collection of information is required by 35 U.S.C. 119, 37 CFR 1.55, and 37 CFR 1.102(d). The information is required to obtain or retain a benefit by the public, which is to file (and by the USPTO to process) an application. Confidentiality is governed by 35 U.S.C. 122 and 37 CFR 1.11 and 1.14. This collection is estimated to take 2 hours to complete, including gathering, preparing, and submitting the completed application form to the USPTO. Time will vary depending upon the individual case. Any comments on the amount of time you require to complete this form and/or suggestions for reducing this burden should be sent to the Chief Information Officer, U.S. Patent and Trademark Office, U.S. Department of Commerce, P.O. Box 1450, Alexandria, VA 22313-1450. DO NOT SEND FEES OR COMPLETED FORMS TO THIS ADDRESS.

PTO/SB/20PCT-KR (06-10)
Approved for use through 01/31/2012. OMB 0651-0058
U.S.Patent and Trademark Office; U.S. DEPARTMENT OF COMMERCE
Under the Paperwork Reduction Act of 1995, no persons are required to respond to a collection of information unless it displays a valid OMB control number.

# REQUEST FOR PARTICIPATION IN THE PCT-PPH PILOT PROGRAM BETWEEN THE KIPO AND THE USPTO

(continued)

| | |
|---|---|
| Application No.: | 13/010,511 |
| First Named Inventor: | Robert Mariniello |

d. **(1) An information disclosure statement listing the documents cited in the international work products (ISR, WO/ISA, WO/IPEA, IPER) of the corresponding PCT application.**

☑ Is attached

☐ Has already been filed in the above-identified U.S. application on _____

**(2) Copies of all documents (except) for U.S. patents or U.S. patent application publications)**

☑ Are attached.

☐ Have already been filed in the above-identified U.S. application on _____

**II. Claims Correspondence Table:**

| Claims in US Application | Patentable Claims in the corresponding PCT Application | Explanation regarding the correspondence |
|---|---|---|
| 1 | 58 | Claim 1 in U.S. App. sufficiently corresponds to claim 58 in the corresponding PCT App. |
| 2 | 59 | Claim 2 in U.S. App. sufficiently corresponds to claim 59 in the corresponding PCT App. |
| 3 | 60 | Claim 3 in U.S. App. sufficiently corresponds to claim 60 in the corresponding PCT App. |
| 4 | 61 | Claim 4 in U.S. App. sufficiently corresponds to claim 61 in the corresponding PCT App. |
| 5 | 62 | Claim 5 in U.S. App. sufficiently corresponds to claim 62 in the corresponding PCT App. |
| 6 | 63 | Claim 6 in U.S. App. sufficiently corresponds to claim 63 in the corresponding PCT App. |
| 7 | 64 | Claim 7 in U.S. App. sufficiently corresponds to claim 64 in the corresponding PCT App. |
| 8 | 65 | Claim 8 in U.S. App. sufficiently corresponds to claim 65 in the corresponding PCT App. |
| 9 | 66 | Claim 9 in U.S. App. sufficiently corresponds to claim 66 in the corresponding PCT App. |
| 10 | 67 | Claim 10 in U.S. App. sufficiently corresponds to claim 67 in the corresponding PCT App. |
| 11 | 68 | Claim 11 in U.S. App. sufficiently corresponds to claim 68 in the corresponding PCT App. |
| 12 | 69 | Claim 12 in U.S. App. sufficiently corresponds to claim 69 in the corresponding PCT App. |
| 13 | 70 | Claim 13 in U.S. App. sufficiently corresponds to claim 70 in the corresponding PCT App. |
| 14 | 71 | Claim 14 in U.S. App. sufficiently corresponds to claim 71 in the corresponding PCT App. |
| 15 | 72 | Claim 15 in U.S. App. sufficiently corresponds to claim 72 in the corresponding PCT App. |
| 16 | 73 | Claim 16 in U.S. App. sufficiently corresponds to claim 73 in the corresponding PCT App. |
| 17 | 74 | Claim 17 in U.S. App. sufficiently corresponds to claim 74 in the corresponding PCT App. |
| 18 | 75 | Claim 18 in U.S. App. sufficiently corresponds to claim 75 in the corresponding PCT App. |
| 19 | 76 | Claim 19 in U.S. App. sufficiently corresponds to claim 76 in the corresponding PCT App. |

**III. All the claims in the US application sufficiently correspond to the patentable claims in the corresponding PCT application.**

| | |
|---|---|
| Signature /Ryan T. Grace/ | Date 10/19/2011 |
| Name (Print/Typed) Ryan T. Grace | Registration Number 52,956 |

PTO/SB/20PCT-KR (06-10)
Approved for use through 01/31/2012. OMB 0651-0058
U.S.Patent and Trademark Office; U.S. DEPARTMENT OF COMMERCE
Under the Paperwork Reduction Act of 1995, no persons are required to respond to a collection of information unless it displays a valid OMB control number.

# REQUEST FOR PARTICIPATION IN THE PCT-PPH PILOT PROGRAM BETWEEN THE KIPO AND THE USPTO

(continued)

| | |
|---|---|
| Application No.: | 13/010,511 |
| First Named Inventor: | Robert Mariniello |

d. **(1) An information disclosure statement listing the documents cited in the international work products (ISR, WO/ISA, WO/IPEA, IPER) of the corresponding PCT application.**

☐ Is attached

☐ Has already been filed in the above-identified U.S. application on _____

**(2) Copies of all documents (except) for U.S. patents or U.S. patent application publications)**

☐ Are attached.

☐ Have already been filed in the above-identified U.S. application on _____

**II. Claims Correspondence Table:**

| Claims in US Application | Patentable Claims in the corresponding PCT Application | Explanation regarding the correspondence |
|---|---|---|
| 20 | 77 | Claim 20 in U.S. App. sufficiently corresponds to claim 77 in the corresponding PCT App. |
| | | |
| | | |
| | | |
| | | |
| | | |
| | | |
| | | |
| | | |
| | | |
| | | |
| | | |
| | | |
| | | |
| | | |
| | | |
| | | |
| | | |

**III. All the claims in the US application sufficiently correspond to the patentable claims in the corresponding PCT application.**

| | |
|---|---|
| Signature /Ryan T. Grace/ | Date 10/19/2011 |
| Name (Print/Typed) Ryan T. Grace | Registration Number 52,596 |

## CLAIMS DETERMINED TO BE PATENTABLE BY KIPO

**NOTE: Only Claims 58-77 (denoted therein as Claims 1-20) were filed in this U.S. Application (13/010,511) and correspond to Claims 58-77 of the PCT Application. The remaining claims were filed in other U.S. Applications.**

1. A process comprising:

receiving, on a computing device, an indication that a low microbial (LM) bulk product vessel exceeds a low microbial wash (LMW) timing threshold;

causing the computing device to schedule a time for a LMW process;

at the time for the LMW process, causing the LMW process to be performed, wherein the LMW process includes:

removing vessel accessibility components from the LM bulk product vessel,

subjecting the vessel accessibility components to a sanitary solution bath,

securing spinners to hopper openings of the LM bulk product vessel,

subjecting the LM bulk product vessel to a rinse operation in association with a time threshold, wherein the rinse operation includes actuating the spinners by forcing hot water through the spinners to cause dispersion of the hot water within the interior of the LM bulk product vessel, and

actuating the spinners by forcing sanitary solution through the spinners to cause dispersion of the sanitary solution within the interior of the LM bulk product vessel; and

causing the computing device to update a LMW record for the LM bulk product vessel to indicate a completion date of the LMW process and to qualify the LM bulk product vessel for transporting an LM bulk product.

2. The process of claim 1, wherein the time threshold is at least 15 consecutive minutes and the hot water is at a temperature from about 140°F to about 215°F.

3. The process of claim 1, wherein the sanitary solution bath is an ammonia based sanitizer at a concentration from about 150 ppm to about 450 ppm.

4. The process of claim 1, wherein the sanitary solution bath is a benzalkonium chloride compound at a concentration from about 150 ppm to about 450 ppm.

5. The process of claim 1, wherein the LM bulk product vessel is a LM bulk flour vessel located on a road vehicle.

6. The process of claim 1, wherein the vehicle accessibility components include at least one member of a group comprising: valves, caps, gaskets, lids, product lines and screens.

7. A process comprising:

receiving an indication that a low microbial (LM) bulk product vessel exceeds a low microbial wash (LMW) timing threshold;

in response to the indication, causing a LMW process to be performed, wherein the LMW process includes:

removing vessel accessibility components from the LM bulk product vessel,

subjecting the vessel accessibility components to a sanitary solution bath,

securing spinners to hopper openings of the LM bulk product vessel, and

actuating the spinners by forcing sanitary solution through the spinners to cause dispersion of the sanitary solution within the interior of the LM bulk product vessel; and

updating a LMW record for the LM bulk product vessel to indicate a completion date of the LMW process.

8. The process of claim 7, further comprising, after securing the spinners to the hopper openings, subjecting the LM bulk product vessel to a rinse operation in association with a time threshold, wherein the rinse operation includes actuating the spinners by forcing hot water through the spinners to cause dispersion of the hot water within the interior of the LM bulk product vessel.

9. The process of claim 8, wherein the time threshold is at least 15 consecutive minutes and the hot water is at a temperature from about 140°F to about 215°F.

10. The process of claim 7, wherein the sanitary solution bath is an ammonia based sanitizer at a concentration from about 150 ppm to about 450 ppm.

11. The process of claim 7, wherein the sanitary solution bath is a benzalkonium chloride compound at a concentration from about 150 ppm to about 450 ppm.

12. The process of claim 7, wherein the LM bulk product vessel is a LM bulk flour vessel located on a road vehicle.

13. The process of claim 7, wherein the vehicle accessibility components include at least one member of a group comprising: valves, caps, gaskets, lids, product lines and screens.

14. The process of claim 7, wherein causing a LMW process to be performed includes causing a computing device to schedule the LMW process.

15. The process of claim 7, wherein updating the LMW record includes causing a computing device to qualify the LM bulk product vessel for transporting an LM bulk product.

16. A process comprising:

receiving a transportation request for the shipment of a low microbial (LM) bulk product;

determining a vehicle transport period based on the transportation request;

identifying an available vehicle for the transportation period;

obtaining a low microbial wash (LMW) timing threshold;

comparing the LMW timing threshold to a LMW wash record for the available vehicle to determine whether the LMW record for the available vehicle is within the LMW timing threshold for the transport period;

when the LMW record for the available vehicle is within the LMW timing threshold for the transport period, qualifying the available vehicle for the shipment of the LM bulk product; and

when the LMW record for the available vehicle is not within the LMW timing threshold for the transport period, causing a LMW process to be performed, wherein the LMW process includes:

removing vessel accessibility components from the vehicle,

subjecting the vessel accessibility components to a sanitary solution bath,

securing spinners to hopper openings of the vehicle,

actuating the spinners by forcing sanitary solution through the spinners to cause dispersion of the sanitary solution within the interior of the vehicle, and

qualifying the vehicle for the shipment of the LM bulk product.

17. The process of claim 16, wherein the time threshold is at least 15 consecutive minutes and the hot water is at a temperature from about 140°F to about 215°F.

18. The process of claim 16, wherein the sanitary solution bath is an ammonia based sanitizer at a concentration from about 150 ppm to about 450 ppm.

19. The process of claim 16, wherein the sanitary solution bath is a benzalkonium chloride compound at a concentration from about 150 ppm to about 450 ppm.

20. The process of claim 16, wherein the LM bulk product vessel is a LM bulk flour vessel located on a road vehicle.

21. A computer-implemented method for transport scheduling of low microbial (LM) bulk products, the computer-implemented method comprising:

receiving a LM bulk product shipment request, wherein the shipment request includes a load-out date value and a receipt date value;

causing a processor to calculate a vehicle transport period based on the load-out date value and the receipt date value;

accessing a transport schedule to determine at least one available vehicle for the calculated vehicle transport period;

comparing a low microbial wash (LMW) timing threshold to a LMW record for the at least one available vehicle to determine whether the at least one available vehicle is within the LMW timing threshold for the transport period;

when the at least one available vehicle is within the LMW timing threshold for the transport period, causing the processor to associate a qualification identifier with an identifier of the at least one available vehicle; and

when the at least one available vehicle is not within the LMW timing threshold for the transport period, causing that at least one processor to associate a disqualification identifier with the identifier of the at least one available vehicle.

22. The computer-implemented method of claim 21, wherein the LMW timing threshold of the LMW specification is based on a predetermined microbial baseline for a LM bulk product.

23. The computer-implemented method of claim 21, wherein the LM bulk product is bulk flour.

24. The computer-implemented method of claim 21, wherein the vehicle includes a flour transport vessel for holding the bulk flour.

25. The computer-implemented method of claim 21, wherein the LMW specification is obtained with the shipment request.

26. The computer-implemented method of claim 21, further comprising when the at least one available vehicle is not within the LMW timing threshold for the transport, scheduling a low microbial wash.

27. The computer-implemented method of claim 26, further comprising receiving an indication that the low microbial wash has been performed.

28. The computer-implemented method of claim 27, further comprising removing the disqualification identifier upon receiving the indication that the low microbial wash has been performed.

29. A computer-readable storage medium having computer executable instructions for transport scheduling of low microbial (LM) bulk products, the instructions comprising:

obtaining a vehicle transport period that is based on a shipping request;

comparing a low microbial wash (LMW) timing threshold of a LMW specification to a LMW record of a vehicle to determine whether the vehicle is within the LMW timing threshold for the vehicle transport period;

when the vehicle is within the LMW timing threshold for the vehicle transport period, updating a schedule of the vehicle to indicate availability of the vehicle for the shipping request; and

when the vehicle is not within the LMW timing threshold for the vehicle transport period, updating a schedule of the vehicle to indicate unavailability of the vehicle for the shipping request.

30. The computer-readable storage medium of claim 29, wherein the LMW timing threshold of the LMW specification is based on a predetermined microbial baseline for a LM bulk product.

31. The computer-readable storage medium of claim 30, wherein the LM bulk product is bulk flour.

32. The computer-readable storage medium of claim 31, wherein the vehicle includes a flour transport vessel for holding the bulk flour.

33. The computer-readable storage medium of claim 29, wherein the LMW specification is obtained with the shipping request.

34. The computer-readable storage medium of claim 29, wherein updating the schedule of the vehicle to indicate unavailability of the vehicle for the shipping request further includes scheduling a low microbial wash.

35. The computer-readable storage medium of claim 34, further comprising receiving an indication that the low microbial wash has been performed.

36. The computer-readable storage medium of claim 35 further comprising removing the indication of unavailability of the vehicle from the shipping request upon receiving the indication that the low microbial wash has been performed.

37. A system for transport scheduling of low microbial (LM) bulk products, the system comprising:

a processor;

a memory having computer-executable instructions stored thereon, wherein the computer-executable instructions are configured for:

obtaining a vehicle transport period that is based on a shipping request;

comparing a low microbial wash (LMW) timing threshold to a LMW record of a vehicle to determine whether the vehicle is within the LMW timing threshold for the vehicle transport period;

when the vehicle is within the LMW timing threshold for the vehicle transport period, updating a schedule of the vehicle to indicate availability of the vehicle for the shipping request; and

when the vehicle is not within the LMW timing threshold for the vehicle transport period, causing at least one member of a group comprising:

updating a schedule of the vehicle to indicate unavailability of the vehicle for the shipping request,

comparing the LMW timing threshold to a LMW record of another vehicle to determine whether the another vehicle is within the LMW timing threshold for the vehicle transport period, and

scheduling the vehicle for a LMW process prior to the vehicle transport period to cause availability of the vehicle for the shipping request.

38. The system of claim 37, wherein the LMW timing threshold of the LMW specification is based on a predetermined microbial baseline for a LM bulk product.

39. The system of claim 38, wherein the LM bulk product is bulk flour.

40. The system of claim 39, wherein the vehicle includes a flour transport vessel for holding the bulk flour.

41. A computer-implemented method comprising:

obtaining a shipping request for a low microbial (LM) bulk product, wherein the shipping request includes a requested receipt date and a product type identifier;

causing at least one processor to calculate a load-out date based on the receipt date;

causing the at least one processor to match the product type identifier of the shipping request to a LMW specification, wherein the LMW specification includes LMW process instructions and a LMW timing threshold, wherein the LMW timing threshold is based on a microbial baseline that indicates a microbial differential over time; and

sending a transport request to a shipping entity, wherein the shipping request includes an identification of the LMW specification to facilitate implementation of the LMW process instructions and the LMW timing threshold as a conditional factor during scheduling of a transport vehicle.

42. The computer-implemented method of claim 41, wherein the product type identifier indicates bulk flour.

43. The computer-implemented method of claim 41, wherein the product type identifier indicates at least one member of a group comprising: flour, bran, germ, grain, oat, rye, wheat, barley, sugar, spice, ground vegetable, ground pepper, and ground fruit.

44. The computer-implemented method of claim 41, wherein causing the at least one processor to match the product type identifier of the shipping request to the LMW specification further comprises:

querying a database, having a plurality of LMW specifications for a plurality of LM bulk product types, with the received product type identifier; and

obtaining a LMW specification among the plurality of LMW specifications that includes a product type identifier that matches the product type identifier of the query.

45. The computer-implemented method of claim 41, further comprising sending a load-out request to a load-out scheduling module, wherein the load-out request includes an identification of the LMW specification and the load-out date to facilitate preconditioning of the LM bulk product prior to load-out.

46. A computer-readable storage medium having computer executable instructions comprising:

receiving a shipping request for a low microbial (LM) bulk product, wherein the shipping request includes a product type identifier;

obtaining a low microbial wash (LMW) specification that matches the product type identifier, wherein the LMW specification includes LMW process instructions and a LMW timing threshold, wherein the LMW timing threshold is based on a microbial baseline that indicates a microbial differential over time; and

sending a transport request to a shipping entity, wherein the shipping request includes an identification of the LMW specification to facilitate implementation of the LMW process instructions and the LMW timing threshold as a conditional factor during scheduling of a transport vehicle.

47. The computer-readable storage medium of claim 46, wherein the product type identifier indicates bulk flour.

48. The computer-readable storage medium of claim 46, wherein the product type identifier indicates at least one member of a group comprising: flour, bran, germ, grain, oat, rye, wheat, barley, sugar, spice, ground vegetable, ground pepper, and ground fruit.

49. The computer-readable storage medium of claim 46, wherein obtaining the LMW specification that matches the product type identifier further comprises:

querying a database, having a plurality of LMW specifications for a plurality of LM bulk product types, with the received product type identifier; and

obtaining a LMW specification among the plurality of LMW specifications that includes a product type identifier that matches the product type identifier of the query.

50. The computer-readable storage medium of claim 46, wherein the shipping request further includes a requested receipt date.

51. The computer-readable storage medium of claim 50, further comprising calculating a load-out date based on the receipt date.

52. The computer-readable storage medium of claim 51, further comprising sending a load-out request to a load-out scheduling module, wherein the load-out request includes an identification of the LMW specification and the load-out date to facilitate preconditioning of the LM bulk product prior to load-out.

53. A system comprising:

at least one processor; and

at least one memory having computer executable instructions stored thereon, wherein the computer executable instruction are configured for:

receiving a shipping request for a low microbial (LM) bulk product, wherein the shipping request includes a requested receipt date and a product type identifier;

causing the processor to calculate a load-out date based on the receipt date;

causing the processor to match the product type identifier of the shipping request to a LMW specification, wherein the LMW specification includes LMW process

instructions and a LMW timing threshold, wherein the LMW timing threshold is based on wherein the LMW timing threshold is based on a microbial baseline that indicates a microbial differential over time; and

sending a transport request to a shipping entity, wherein the shipping request includes an identification of the LMW specification to facilitate implementation of the LMW process instructions and the LMW timing threshold as a conditional factor during scheduling of a transport vehicle.

54. The system of claim 53, wherein the product type identifier indicates bulk flour.

55. The system of claim 53, wherein the product type identifier indicates at least one member of a group comprising: flour, bran, germ, grain, oat, rye, wheat, barley, sugar, spice, ground vegetable, ground pepper, and ground fruit.

56. The system of claim 53, wherein causing the processor to match the product type identifier of the shipping request to the LMW specifications further comprises:

querying a database, having a plurality of LMW specifications for a plurality of LM bulk product types, with the received product type identifier; and

obtaining a LMW specification among the plurality of LMW specifications that includes a product type identifier that matches the product type identifier of the query.

57. The system of claim 53, further comprising sending a load-out request to a load-out scheduling module, wherein the load-out request includes an identification of the LMW specification and the load-out date to facilitate preconditioning of the LM bulk product prior to load-out.

58. A computer-readable storage medium having computer executable instructions for adjusting a low microbial (LM) bulk product for a product transport period having predicted environmental conditions, the instructions comprising:

determining a product transport period based on a shipping request;

obtaining predicted environmental conditions related to the product transport period;

determining optimal product conditions, for the LM bulk product, to be maintained during the product transport period;

receiving an indication of current product conditions of the LM bulk product;

determining whether the current product conditions require adjustment to maintain the optimal product conditions for the transport period having the predicted environmental conditions; and

when the current product conditions require adjustment to maintain the optimal product conditions for the transport period having the predicted environmental conditions, adjusting the current product conditions to a value that maintains the optimal product conditions during the transport period having the environmental conditions.

59. The computer-readable storage medium of claim 58, wherein the predicted environmental conditions include at least one member of a group comprising: a temperature value for the transport period along a transport path, and a humidity value for the transport period along a transport path.

60. The computer-readable storage medium of claim 59, wherein the optimal product conditions include at least one member of a group comprising: an optimal temperature to be maintained during the product transport period and an optimal moisture content to be maintained during the product transport period.

61. The computer-readable storage medium of claim 60, wherein the optimal product conditions are determined from a low microbial wash specification ("LMW") obtained from a database including a plurality of LMW specifications for a plurality of LM bulk product types.

62. The computer-readable storage medium of claim 58, wherein the current product conditions of the LM bulk product include at least one member of a group comprising: a current temperature and a current moisture content.

63. The computer-readable storage medium of claim 62, wherein adjusting the current product conditions to a value that maintains the optimal product conditions during the transport

period having the predicted environmental conditions includes at least one member of a group comprising: adjusting the temperature of the LM bulk product to a temperature that maintains an optimal product temperature during the transport period having a predicted environmental temperature, and adjusting the moisture content of the LM bulk product to a moisture content that maintains an optimal product moisture content during the transport period having a predicted environmental humidity.

64. The computer-readable storage medium of claim 63, wherein adjusting the current product conditions occurs prior to load-out.

65. The computer-readable storage medium of claim 63, wherein adjusting the current product conditions occurs during transport.

66. A computer-implemented method for adjusting a low microbial (LM) bulk product for a product transport period having predicted environmental conditions, the instructions comprising:

causing a processor to determine a product transport period based on a shipping request;

causing the processor to obtain predicted environmental conditions related to the product transport period;

causing the processor to determine optimal product conditions, for the LM bulk product, to be maintained during the product transport period;

receiving an indication of current product conditions of the LM bulk product;

causing the processor to determine whether the current product conditions require adjustment to maintain the optimal product conditions for the transport period having the predicted environmental conditions; and

when the current product condition values require adjustment to maintain the optimal product conditions for the transport period having the predicted environmental conditions, adjusting the current product conditions to a value that maintains the optimal product conditions during the transport period having the environmental conditions.

67. The computer-implemented method of claim 66, wherein the predicted environmental conditions include at least one member of a group comprising: a temperature value for the transport period along a transport path and a humidity value for the transport period along a transport path.

68. The computer-implemented method of claim 67, wherein the optimal product conditions include at least one member of a group comprising: an optimal temperature to be maintained during the product transport period and an optimal moisture content to be maintained during the product transport period.

69. The computer-implemented method of claim 68, wherein the optimal product conditions are determined from a low microbial wash specification ("LMW") obtained from a database including a plurality of LMW specifications for a plurality of LM bulk product types.

70. The computer-implemented method of claim 68, wherein the current product conditions of the LM bulk product include at least one member of a group comprising: a current temperature and a current moisture content.

71. The computer-implemented method of claim 70, wherein adjusting the current product conditions to a value that maintains the optimal product conditions during the transport period having the predicted environmental conditions includes at least one member of a group comprising: adjusting the temperature of the LM bulk product to a temperature that maintains an optimal product temperature during the transport period having a predicted environmental temperature and adjusting the moisture content of the LM bulk product to a moisture content that maintains an optimal product moisture content during the transport period having a predicted environmental humidity.

72. The computer-implemented method of claim 71, wherein adjusting the current product conditions occurs in association with at least one member of a group comprising: prior to load-out and during transport.

73. A system for adjusting a low microbial (LM) bulk product prior to a product transport period, the system comprising:

at least one LM bulk product condition sensor configured to monitor conditions of the LM bulk product;

at least one LM bulk product condition adjustor device configured to adjust current product condition values of the LM bulk product;

at least one processor; and

at least one memory having computer executable instructions stored thereon, wherein the computer executable instructions are configured for:

obtaining predicted environmental condition values related to a product transport period;

causing the at least one processor to determine optimal product condition values, for the LM bulk, to be maintained during the product transport period;

receiving current product condition values from at least one LM bulk product condition sensor;

cause the at least one processor to determining whether the current product condition values require adjustment to maintain the optimal product conditions for the transport period having the predicted environmental conditions; and

when the current product condition values require adjustment to maintain the optimal product conditions for the transport period having the predicted environmental conditions, causing the at least one processor to send an actuation signal to the at least one LM bulk product condition adjustor device to cause adjustment of the current product condition values to a value that maintains the optimal product conditions during the transport period having the environmental conditions.

74. The system of claim 73, wherein the predicted environmental conditions include at least one member of a group comprising: a temperature value for the transport period along a transport path and a humidity value for the transport period along a transport path.

75. The system of claim 74, wherein the optimal product conditions include at least one member of a group comprising: an optimal temperature to be maintained during the product

transport period and an optimal moisture content to be maintained during the product transport period.

76. The system of claim 75, wherein the current product conditions of the LM bulk product include at least one member of a group comprising: a current temperature and a current moisture content.

77. The system of claim 76, wherein adjusting the current product conditions to a value that maintains the optimal product conditions during the transport period having the predicted environmental conditions includes at least one member of a group comprising: adjusting the temperature of the LM bulk product to a temperature that maintains an optimal product temperature during the transport period having a predicted environmental temperature and adjusting the moisture content of the LM bulk product to a moisture content that maintains an optimal product moisture content during the transport period having a predicted environmental humidity.

UNITED STATES PATENT AND TRADEMARK OFFICE

Commissioner for Patents
United States Patent and Trademark Office
P.O. Box 1450
Alexandria, VA 22313-1450
www.uspto.gov

**Advent IP, P.C., L.L.O.**
**2425 South 144th Street**
**Suite 202**
**Omaha NE 68144-3282**

**MAILED**
FEB 27 2012
**OFFICE OF PETITIONS**

In re Application of
Robert Marinello, et al.
Application No.: 13/010,511
Filed: January 20, 2011
Attorney Docket No.: 15721.0734USU5
For: TRANSPORT SCHEDULING FOR LOW MICROBIAL BULK PRODUCTS

**: DECISION ON REQUEST TO**
**: PARTICIPATE IN THE PATENT**
**: PROSECUTION HIGHWAY**
**: PROGRAM AND PETITION**
**: TO MAKE SPECIAL UNDER**
**: 37 CFR 1.102(a)**

This is a decision on the request to participate in the Patent Prosecution Highway (PPH) program and the petition under 37 CFR 1.102(a), filed October 19, 2011, to make the above-identified application special.

The request and petition are **GRANTED.**

**Discussion**

A grantable request to participate in the PPH program and petition to make special require:

1. The U.S. application is

    a. a Paris Convention application which either
        i. validly claims priority under 35 U.S.C. 119(a) and 37 CFR 1.55 to one or more applications filed in the KIPO, or
        ii. validly claims priority under 35 U.S.C. 119(a)/365(a) to a PCT application that contains no priority claims,

    or

    b. a national stage application under the PCT (an application which entered the national stage in the U.S. from a PCT international application after compliance with 35 U.S.C. 371), which PCT application
        i. validly claims priority under 35 U.S.C. 365(b) to an application filed in the KIPO, or
        ii. validly claims priority under 35 U.S.C. 365(b) to a PCT application that contains no priority claims, or
        iii. contains no priority claim,

    or

    c. a so-called bypass application filed under 35 U.S.C. 111(a) which validly claims benefit under 35 U.S.C. 120 to a PCT application, which PCT application

   i. validly claims priority under 35 U.S.C. 365(b) to an application filed in the KIPO, or
   ii. validly claims priority under 35 U.S.C. 365(b) to a PCT application that contains no priority claims, or
   iii. contains no priority claim;
2. Applicant must submit a copy of:
   a. The allowable/patentable claim(s) from the KR application(s);
   b. An English translation of the allowable/patentable claim(s), and
   c. A statement that the English translation is accurate (if the claims were published in a language other than English);
3. Applicant must:
   a. Ensure that all the claims in the U.S. application must sufficiently correspond or be amended to sufficiently correspond to the allowable/patentable claim(s) in the KR application(s), and
   b. Submit a claims correspondence table in English;
4. Examination of the U.S. application has not begun;
5. Applicant must submit:
   a. A copy of all the office actions (which are relevant to patentability), excluding "Decision to Grant a Patent" from each of the KR application(s) containing the allowable/patentable claim(s);
   b. An English language translation of the KIPO office action; and
   c. A statement that the English translation is accurate (if the office actions are not in the English language);
6. Applicant must submit:
   a. An IDS listing the documents cited by the KIPO examiner in the KIPO office action (unless already filed in this application); and
   b. Copies of all the documents cited in the KIPO office action, except U.S. patents or U.S. patent application publications (unless already filed in this application);

The request to participate in the PPH program and petition comply with the above requirements. Accordingly, the above-identified application has been accorded "special" status.

Telephone inquiries concerning this decision should be directed to Terri Johnson at 571-272-2991.

All other inquiries concerning the examination or status of the application is accessible in the PAIR system at http://uspto.gov/ebc/index.html.

David Bucci
Petitions Examiner
Office of Petitions

| | |
|---|---|
| **Doc Code: PET.AUTO**<br>**Document Description: Petition automatically granted by EFS-Web** | PTO/SB/83<br>U.S. Patent and Trademark Office<br>Department of Commerce |

| | |
|---|---|
| Electronic Petition Request | **REQUEST FOR WITHDRAWAL AS ATTORNEY OR AGENT AND CHANGE OF CORRESPONDENCE ADDRESS** |
| Application Number | 13010521 |
| Filing Date | 20-Jan-2011 |
| First Named Inventor | Edward Mislavsky |
| Art Unit | 3684 |
| Examiner Name | SUSANNA MEINECKE DIAZ |
| Attorney Docket Number | MIS002 |
| Title | SYSTEM AND METHOD FOR PERFORMING PROJECT MANAGEMENT ATTENDANT TO ANY OF VARIOUS TYPES OF PROJECTS |

◉ Please withdraw me as attorney or agent for the above identified patent application and the practitioners of record associated with Customer Number: 71136

The reason(s) for this request are those described in 37 CFR:

10.40(c)(1)(vi)

Certifications

☒ I/We have given reasonable notice to the client, prior to the expiration of the response period, that the practitioner(s) intend to withdraw from employment

☒ I/We have delivered to the client or a duly authorized representative of the client all papers and property (including funds) to which the client is entitled

☒ I/We have notified the client of any responses that may be due and the time frame within which the client must respond

Change the correspondence address and direct all future correspondence to the first named inventor or assignee that has properly made itself of record pursuant to 37 CFR 3.71:

| | |
|---|---|
| Name | Edward Ruben Mislavsky |
| Address | 18 Woolley Way |
| City | Ocean |
| State | NJ |
| Postal Code | 07712 |
| Country | US |

| I am authorized to sign on behalf of myself and all withdrawing practitioners. | |
|---|---|
| Signature | /John P. Maldjian/ |
| Name | John P. Maldjian |
| Registration Number | 41967 |

UNITED STATES PATENT AND TRADEMARK OFFICE

Commissioner for Patents
United States Patent and Trademark Office
P.O. Box 1450
Alexandria, VA 22313-1450
www.uspto.gov

Decision Date : December 7, 2011

In re Application of :

Edward Mislavsky

Application No : 13010521

Filed : 20-Jan-2011

Attorney Docket No : MIS002

DECISION ON REQUEST TO WITHDRAW AS ATTORNEY/AGENTOF RECORD

This is an electronic decision on the Request to Withdraw as attorney or agent of record under 37 CFR § 1.36(b), filed December 7, 2011

The request is **APPROVED.**

The request was signed by John P. Maldjian (registration no. 41967 ) on behalf of all attorneys/agents associated with Customer Number 71136 . All attorneys/agents associated with Cusotmer Number 71136 have been withdrawn.

Since there are no remaining attorneys of record, all future communications from the Office will be directed to the first named inventor or assignee that has properly made itself of record pursuant to 37 CFR 3.71, with correspondence address:

Name Edward Ruben Mislavsky
Name2
Address 1 18 Woolley Way
Address 2
City Ocean
State NJ
Postal Code 07712
Country US

As a reminder, requester is required to inform the first named inventor or assignee that has properly made itself of record pursuant to 37 CFR 3.71 of the electronically processed petition.

Telephone inquiries concerning this decision should be directed to the Patent Electronic Business Center (EBC) at 866-217-9197.

Office of Petitions

UNITED STATES PATENT AND TRADEMARK OFFICE

Commissioner for Patents
United States Patent and Trademark Office
P.O. Box 1450
Alexandria, VA 22313-1450
www.uspto.gov

SLATER & MATSIL, L.L.P.
17950 PRESTON RD, SUITE 1000
DALLAS TX 75252-5793

MAILED

MAY 19 2011

OFFICE OF PETITIONS

In re Application of :
Feichtinger et al. :
Application No. 13/010,567 : RESPONSE TO PETITION
Filed: January 20, 2011 :
Attorney Docket No. EPC-139 :

This is a response to the petition under 37 CFR 1.59(b), filed March 15, 2011, to expunge information from the above identified application.

The petition is **granted**.

On March 4, 2011, an Amendment after Final was filed in the above-identified application. The Amendment was intended for U.S. Application No. 11/841,169 but was matched with the above identified application. Petitioner now requests that this amendment be removed from the file of the above identified application.

Upon a showing satisfactory to the Director, information, other than that forming part of the original disclosure, may be expunged from an application. Since the Office can determine the correct application file for which the erroneously filed papers were intended from the other identifying information on the papers, the papers will be removed as requested.

In a paper file, the unintentionally submitted exhibits could, but not necessarily would, have been physically removed from the file wrapper and returned to applicant. However, this is not the practice for electronic documents, for which the corresponding action is to close the electronic copy of the document and also remove such from the listing of "Public[ly available] Documents." It is agreed that it would be appropriate in this instance to close the unintentionally filed Amendment filed March 4, 2011 in the above identified application, and also remove such from the listing of publicly available documents for this Image File Wrapper (IFW).

Telephone inquiries concerning this communication should be directed to the undersigned at (571) 272-6692.

Christopher Bottorff
Petitions Examiner
Office of Petitions

UNITED STATES PATENT AND TRADEMARK OFFICE

UNITED STATES DEPARTMENT OF COMMERCE
United States Patent and Trademark Office
Address: COMMISSIONER FOR PATENTS
P.O. Box 1450
Alexandria, Virginia 22313-1450
www.uspto.gov

| APPLICATION NO. | FILING DATE | FIRST NAMED INVENTOR | ATTORNEY DOCKET NO. | CONFIRMATION NO. |
|---|---|---|---|---|
| 13/010,667 | 01/20/2011 | Ravi Kant Keswani | 60202-0070 | 3170 |

29989 7590 04/27/2011

HICKMAN PALERMO TRUONG & BECKER, LLP
2055 GATEWAY PLACE
SUITE 550
SAN JOSE, CA 95110

| EXAMINER | |
|---|---|
| HUNG, YUBIN | |

| ART UNIT | PAPER NUMBER |
|---|---|
| 2624 | |

| MAIL DATE | DELIVERY MODE |
|---|---|
| 04/27/2011 | PAPER |

**Please find below and/or attached an Office communication concerning this application or proceeding.**

The time period for reply, if any, is set in the attached communication.

UNITED STATES PATENT AND TRADEMARK OFFICE

Commissioner for Patents
United States Patent and Trademark Office
P.O. Box 1450
Alexandria, VA 22313-1450
www.uspto.gov

HICKMAN PALERMO TRUONG & BECKER, LLP
2055 GATEWAY PLACE
SUITE 550
SAN JOSE CA 95110

| | |
|---|---|
| In re Application of:<br>KESWANI, RAVI KANT et al.<br>Serial No.: 13/010,667<br>Filed: January 20, 2011<br>Docket: **60202-0070**<br>Title: **COUPON COPY PROTECTION** | DECISION ON PETITION TO MAKE SPECIAL FOR NEW APPLICATION UNDER 37 C.F.R. § 1.102 & M.P.E.P. § 708.02 |

This is a decision on the petition filed on January 20, 2011 requesting to make the above-identified application special for accelerated examination procedure under 37 C.F.R. § 1.102(d).

The petition to make the application special is GRANTED.

The application is eligible for accelerated examination and the petition complies with the conditions for granting the application special status pursuant to the "Change to Practice for Petitions in Patent Applications to Make Special and for Accelerated Examination" published June 26, 2006, in the Federal Register. (71 Fed. Reg. 36323).

The prosecution of the instant application will be conducted expeditiously according to the following guidelines.

1. The application will be docketed to an examiner and taken up for action within two weeks of the date of this decision.

2. Restriction Practice:
   If the examiner determines that the claims are not directed to a single invention, a telephone request to elect one single invention will be made pursuant to MPEP 812.01. As a prerequisite to the grant of this petition, the applicant has agreed to make an oral election, by telephone, without traverse. If the applicant refuses to make an election without traverse, or the examiner cannot reach the applicant after a reasonable effort, the examiner will treat the first claimed invention (invention defined by claim 1) as having being constructively elected without traverse for examination.

3. Office action:

If it is determined that, after appropriate consultation, there is a potential rejection or any other issue to be addressed, the examiner will telephone the applicant and arrange an interview to discuss and resolve the issue. An Office action, other than a Notice of Allowance and Fee(s) Due (Notice of Allowance), will not be issued unless either: 1) an interview was conducted but did not result in agreed to action that places the application in condition for allowance, or, 2) a determination is made that an interview would be unlikely to result in the application being placed in condition for allowance, and 3) an internal conference has been held to review any rejection of any claim.

4. Time for Reply:
An Office action other than a Notice of Allowance or a final Office action will set a shortened statutory period of one month or thirty days, whichever is longer, for reply with no extension of time available under 37 CFR 1.136(a). Failure to timely file a reply within this non-extendible period for reply will result in the abandonment of the application.

5. Reply by Applicant:
A timely reply to an Office action other than the Notice of Allowance must be submitted electronically via EFS or EFS-web and limited to addressing the rejections, objections and requirement made. Any amendment that attempts to: 1) add claims which would result in more than three pending independent claims or more than twenty pending total claims; 2) present claims not encompassed by the pre-examination search or an updated accelerated examination support document; or 3) present claims that are directed a non-elected invention or an invention other than that previously claimed and examined in the application, will be treated as not fully responsive and will not be entered.

For any amendment to the claims (including any new claim) that is not encompassed by the accelerated examination support document, applicant must provide an updated accelerated examination support document that encompasses the amended or new claims at the time of filing of the amendment.

To proceed expeditiously with the examination, it is recommended that a reply with amendments made to any claim or with any new claim being added be accompanied by an updated accelerated examination support document or a statement explaining how the amended or new claim is supported by the original accelerated examination support document.

6. Information Disclosure Statement (IDS):
Any IDS filed during prosecution must be submitted electronically via EFS or EFS-web, accompanied by an updated accelerated examination support document, and be in compliance with 37 CFR 1.97 and 1.98.

7. Post-Allowance Processing:
To expedite processing of the allowed application into a patent, the applicant must: 1) pay the required fees within one month of the date of the Notice of Allowance, and 2) not

file any post allowance papers not required by the Office. In no event may the issue fee be paid and accepted later than three months from the date of the Notice of Allowance.

8. After-Final and Appeal Procedures:
To expedite prosecution, after receiving the final Office action, applicant must: 1) promptly file a notice of appeal, an appeal brief and appeal fees; and 2) not request a pre-appeal brief conference.

   Any amendment, affidavit or other evidence filed after final Office action must comply with applicable rules and the requirements outlined in numbered paragraphs 5 and 6 above.

   On appeal, the application will proceed according to normal appeal procedures. After appeal, the application will again be treated special.

9. Proceedings Outside the Normal Examination Process:
If the application becomes involved in a proceeding that is outside the normal examination process (e.g., a secrecy order, national security review, interference proceeding, petitions under 37 CFR 1.181, 182 or 183), the application will be treated special before and after such proceeding.

10. Final Disposition:
The twelve month goal of this accelerated examination procedure ends with a final disposition. The mailing of a final Office action, a Notice of Allowance, the filing of a Notice of Appeal, or the filing of a Request for Continued Examination (RCE) is the final disposition.

If, during prosecution, a paper is not filed electronically using EFS-web, a reply is filed but is not fully responsive, the application is involved in an appeal, or a proceeding outside normal examination process, the application will still be examined expeditiously, however, the final disposition may occur more than twelve months from the filing of the application.

Any inquiry regarding this decision should be directed to Wellington Chin, Quality Assurance Specialist, at (571) 272-3134.

/ Wellington Chin /

Wellington Chin
Quality Assurance Specialist
Technology Center 2600

UNITED STATES PATENT AND TRADEMARK OFFICE

Commissioner for Patents
United States Patent and Trademark Office
P.O. Box 1450
Alexandria, VA 22313-1450
www.uspto.gov

**MAILED**

FEB 28 2011

**OFFICE OF PETITIONS**

AMPACC LAW GROUP, LLC
6100 219TH STREET SW
SUITE 580
MOUNTLAKE TERRACE, WA 98043

In re Application of

Karl E. Stahlkopf, et al.
Application No. 13/010,683
Filed: January 20, 2011
Attorney Docket No. 800KT-000290US

DECISION ON PETITION
TO MAKE SPECIAL UNDER
37 CFR 1.102(c)(1)

This is a decision on the petition under 37 CFR 1.102(c)(1), filed January 20, 2011, to make the above-identified application special based on applicant's age as set forth in M.P.E.P. § 708.02, Section IV.

The petition is **GRANTED**.

A grantable petition to make an application special under 37 CFR 1.102(c)(1) and MPEP § 708.02, Section IV: Applicant's Age must be accompanied by evidence showing that at least one of the applicants is 65 years of age, or more, such as a birth certificate or a statement by applicant. No fee is required

The instant petition includes a statement from applicant's representative that he is in possession of proof of applicant Karl E. Stahlkopf's age. Accordingly, the above-identified application has been accorded "special" status.

Telephone inquiries concerning this decision should be directed to undersigned at 571-272-1642.

All other inquiries concerning either the examination or status of the application should be directed to the Technology Center.

The application is being forwarded to the Technology Center Art Unit 3745 for action on the merits commensurate with this decision.

/AMW/
April M. Wise
Petitions Examiner
Office of Petitions

**Doc Code: PET.GREEN**
**Document Description: Petition for Green Tech Pilot**

PTO/SB/420 (03-11)

# PETITION TO MAKE SPECIAL UNDER THE GREEN TECHNOLOGY PILOT PROGRAM

| Attorney Docket Number: | 800KT-000290US | Application Number (if known): | 13/010,683 | Filing date: | January 20, 2011 |
|---|---|---|---|---|---|

First Named Inventor: Karl E. STAHLKOPF

Title: COMPRESSED AIR ENERGY STORAGE SYSTEM UTILIZING TWO-PHASE FLOW TO FACILITATE HEAT EXCHANGE

**APPLICANT HEREBY REQUESTS TO PARTICIPATE IN THE GREEN TECHNOLOGY PILOT PROGRAM FOR THE ABOVE-IDENTIFIED APPLICATION. See Instruction Sheet on page 2.**

This petition must be timely filed electronically using the USPTO electronic filing system, EFS-Web.

1. By filing this petition:

   **Applicant is requesting early publication: Applicant hereby requests early publication under 37 CFR 1.219 and the publication fee set forth in 37 CFR 1.18(d) accompanies this request.**

2. By filing this petition: applicant is agreeing to make an election without traverse in a telephonic interview and elect an invention that meets the eligibility requirements for the Green Technology Pilot Program, if the Office determines that the claims are not obviously directed to a single invention. See Instruction Sheet.

3. This request is accompanied by statements of special status for the eligibility requirement.

4. The application contains no more than three (3) independent claims and twenty (20) total claims.

5. The application does not contain any multiple dependent claims.

6. Other attachments: See attached Statement

| Signature | /Kent J. Tobin/ | Date | September 16, 2011 |
|---|---|---|---|
| Name (Print/Typed) | Kent J. Tobin | Registration Number | 39,496 |

***Note:*** *Signatures of all the inventors or assignees of record of the entire interest or their representative(s) are required in accordance with 37 CFR 1.33 and 11.18. Please see 37 CFR 1.4(d) for the form of the signature. If necessary, submit multiple forms for more than one signature, see below*.*

■ *Total of 2 forms are submitted.

*If you need assistance in completing the form, call 1-800-PTO-9199 and select option 2.*

UNITED STATES PATENT AND TRADEMARK OFFICE

UNITED STATES DEPARTMENT OF COMMERCE
United States Patent and Trademark Office
Address: COMMISSIONER FOR PATENTS
P.O. Box 1450
Alexandria, Virginia 22313-1450
www.uspto.gov

| APPLICATION NO. | FILING DATE | FIRST NAMED INVENTOR | ATTORNEY DOCKET NO. | CONFIRMATION NO. |
|---|---|---|---|---|
| 13/010,683 | 01/20/2011 | Karl E. STAHLKOPF | 800KT-000290US | 3202 |

83274 7590 10/03/2011

AMPACC Law Group, PLLC
6100 219th Street SW, Suite 580
Mountlake Terrace, WA 98043

| EXAMINER | |
|---|---|
| ART UNIT | PAPER NUMBER |
| 2839 | |

| NOTIFICATION DATE | DELIVERY MODE |
|---|---|
| 10/03/2011 | ELECTRONIC |

**Please find below and/or attached an Office communication concerning this application or proceeding.**

The time period for reply, if any, is set in the attached communication.

Notice of the Office communication was sent electronically on above-indicated "Notification Date" to the following e-mail address(es):

DOCKETING@AMPACC.COM
email@ampacc.com

UNITED STATES PATENT AND TRADEMARK OFFICE

Commissioner for Patents
United States Patent and Trademark Office
P.O. Box 1450
Alexandria, VA 22313-1450
www.uspto.gov

AMPACC Law Group, PLLC
6100 219th Street SW, Suite 580
Mountlake Terrace WA 98043

OCT 3 2011

In re Application of :
STAHLKOPF et al. : DECISION ON PETITION
Application No. 13/010683 : TO MAKE SPECIAL UNDER
Filed: January 20, 2011 : THE GREEN TECHNOLOGY
Attorney Docket No. 800KT-000290US : PILOT PROGRAM

This is a decision on the petition under 37 CFR 1.102, filed September 16, 2011, to make the above-identified application special under the pilot program for applications pertaining to Green Technologies as set forth in 74 Federal Register Notice 64666 (December 8, 2009) and amended by 75 Federal Register Notice 28554 (May 21, 2010) and 75 Federal Register Notice 69049 (November 10, 2010).

The petition is **DISMISSED-AS-MOOT**.

On February 28, 2011, the USPTO mailed a Petition Decision which granted applicant's petition to make the present application special based on the applicant's age. Accordingly, the present application is currently in special status, thus rendering the present Petition to Make Special moot.

Any reconsideration of this decision should be submitted through the USPTO electronic filing system, EFS-Web, and selecting the document description of "Petition for Green Tech Pilot" on the EFS-Web screen.

Telephone inquires concerning this decision should be directed to Colleen Dunn at 571-272-1170.

/Colleen Dunn/

Colleen Dunn
Quality Assurance Specialist
Technology Center 2800

UNITED STATES PATENT AND TRADEMARK OFFICE

Commissioner for Patents
United States Patent and Trademark Office
P.O. Box 1450
Alexandria, VA 22313-1450
www.uspto.gov

Ward & Zinna, LLC
SUITE 300
382 SPRINGFIELD AVENUE
SUMMIT NJ 07901

**MAILED**

DEC 19 2011

**OFFICE OF PETITIONS**

In re Application of :
Scott L. Evans et al. :
Application No. 13/010,744 : DECISION ON PETITION
Filed: January 20, 2011 : TO WITHDRAW
Attorney Docket No. **C319 1050US.2** : FROM RECORD
:

This is a decision on the Request to Withdraw as attorney or agent of record under 37 CFR § 1.36(b), filed November 29, 2011.

The request is **NOT APPROVED**.

A review of the file record indicates that Hean L. Koo or any attorneys/agents associated with Customer Number 26158 does not have power of attorney or was ever given power of attorney in the above-identified application. Accordingly, the request to withdraw under 37 CFR § 1.36(b) is not applicable.

All future communications from the Office will continue to be directed to the address of record until otherwise properly notified by the applicant.

Telephone inquires concerning this decision should be directed to the undersigned at 571-272-4584.

/JoAnne Burke/
JoAnne Burke
Petitions Examiner
Office of Petitions

UNITED STATES PATENT AND TRADEMARK OFFICE

Commissioner for Patents
United States Patent and Trademark Office
P.O. Box 1450
Alexandria, VA 22313-1450
www.uspto.gov

MAILED

MAY 18 2011

OFFICE OF PETITIONS

BLAKELY SOKOLOFF TAYLOR & ZAFMAN LLP
1279 OAKMEAD PARKWAY
SUNNYVALE CA 94085-4040

In re Application of :
Mrak, et al. :
Application No. 13/010,749 : DECISION ACCORDING STATUS
Filed: January 20, 2011 : UNDER 37 CFR 1.47(a)
Attorney Docket No. 9121P001 :

This is in response to the petition under 37 CFR 1.47(a), filed May 4, 2011.

The petition under 37 CFR 1.47(a) is **GRANTED**.

Rule 47 applicant has demonstrated that inventor Hauge has refused to sign the declaration.

The petition and declaration have been reviewed and determined to be in compliance with 37 CFR 1.47(a).

The application is hereby accorded Rule 47 status.

As provided in 37 CFR 1.47(c), the Office will provide notice of this application's filing to the non-signing inventor at the last known address provided in the petition. Notice will also be provided in the Official Gazette.

The $200 petition fee has been charged to Deposit Account No. 02-2666, as authorized.

The application is being forwarded to the Office of Patent Application Processing for pre-examination processing.

Telephone inquiries related to this decision may be directed to the undersigned at (571)272-3207.

Cliff Congo
Petitions Attorney
Office of Petitions

UNITED STATES PATENT AND TRADEMARK OFFICE

Commissioner for Patents
United States Patent and Trademark Office
P.O. Box 1450
Alexandria, VA 22313-1450
www.uspto.gov

MAILED

MAY 18 2011

OFFICE OF PETITIONS

ERIC C HAUGE
11576 MERIDIAN
CHICO CA 94973

In re Application of :
Mrak, et al. :
Application No. 13/010,749 :
Filed: January 20, 2011 : LETTER
Title: Surface Applied Abrasive
Cleaning Apparatus and Method

Dear Mr. Hauge:

You are named as a joint inventor in the above-identified United States patent application filed under the provisions of 35 USC 116 (United States Code) and 37 CFR 1.47(a), Rules of Practice in Patent Cases. Should a patent be granted on the application you will be designated therein as joint inventor.

As a named inventor you are entitled to inspect any paper in the file wrapper of the application, order copies of all or any part thereof (at a prepaid cost per 37 CFR 1.19) or make your position of record in the application. Alternatively, you may arrange to do any of the preceding through a registered patent attorney or agent presenting written authorization from you. If you care to join the application, agent of record would presumably assist you. Joining in the application would entail the filing of an appropriate oath or declaration by you pursuant to 37 CFR 1.63.

Telephone inquiries regarding this communication should be directed to Petitions Attorney Cliff Congo at (571)272-3207. Requests for information regarding your application should be directed to the File Information Unit at (703) 308-2733. Information regarding how to pay for and order a copy of the application, or a specific paper in the application, should be directed to the Certification Division at (703) 308-9726 or 1-800-972-6382 (outside the Washington D.C. area).

Cliff Congo
Petitions Attorney
Office of Petitions

UNITED STATES PATENT AND TRADEMARK OFFICE

UNITED STATES DEPARTMENT OF COMMERCE
United States Patent and Trademark Office
Address: COMMISSIONER FOR PATENTS
P.O. Box 1450
Alexandria, Virginia 22313-1450
www.uspto.gov

| APPLICATION NO. | FILING DATE | FIRST NAMED INVENTOR | ATTORNEY DOCKET NO. | CONFIRMATION NO. |
|---|---|---|---|---|
| 13/010,767 | 01/20/2011 | Chi Kin John MAK | JM-1007-USPT | 3359 |

76870 7590 03/08/2011

B.Y.I.P. LTD.
P.O. Box 1484
General Post Office
Hong Kong, 00000
HONG KONG

| EXAMINER | |
|---|---|
| ART UNIT | PAPER NUMBER |
| 3643 | |

| NOTIFICATION DATE | DELIVERY MODE |
|---|---|
| 03/08/2011 | ELECTRONIC |

**Please find below and/or attached an Office communication concerning this application or proceeding.**

The time period for reply, if any, is set in the attached communication.

Notice of the Office communication was sent electronically on above-indicated "Notification Date" to the following e-mail address(es):

CHO@BARRON-YOUNG.COM
charlesho@barron-young.com
LWang@barron-young.com

UNITED STATES PATENT AND TRADEMARK OFFICE

Commissioner for Patents
United States Patent and Trademark Office
P.O. Box 1450
Alexandria, VA 22313-1450
www.uspto.gov

MAR - 7 2011

B.Y.I.P. Ltd.
P.O. Box 1484
General Post Office
Hong Kong, Hong Kong 00000

In re application of : **DECISION ON PETITION**
ChiKinJohnMak : **TO MAKE SPECIAL FOR**
Application No. 13/010,767 : **NEW APPLICATION**
Filed: January 20, 2011 : **UNDER 37 CFR 1.102**
For: DE-SHEDDING TOOL AND METHOD OF MANUFACTURING THE SAME

This is a decision on the petition filed on January 20, 2011 to make the above-identified application special for accelerated examination procedure under 37 C.F.R. § 1.102(d).

The petition to make the application special is **DISMISSED**.

REGULATION AND PRACTICE

A grantable petition to make special under 37 C.F.R. § 1.102(d) and pursuant to the "Change to Practice for Petitions in Patent Applications to Make Special and for Accelerated Examination" published in the Federal Register on June 26, 2006 (71 Fed. Reg. 36323), must satisfy the following conditions:

I. Conditions Regarding the Application:

1. the application must be a non-reissue utility or design application filed under 37 CFR 1.111(a);

2. the application, the petition and the required fees must be filed electronically using the USPTO's electronic filing system (EFS), or EFS-web; if not filed electronically, a statement asserting that EFS and EFS-web were not available during the normal business hours.

3. at the time of filing, the application must be complete under 37 CFR 1.51 and in condition for examination;

4. the application must contain three or fewer independent claims and twenty or fewer total claims and the claims must be directed to a single invention.

II. Conditions Regarding the Petition:

The petition must:

1. be filed with the application;

2. include a statement that applicant agrees not to separately argue the patentability of any independent claim during any appeal in the application;

3. include a statement that applicant agrees to make an election without traverse in a telephone interview.

4. include a statement that applicant agrees to conduct such an interview when requested by the examiner.

5. include a statement, made based on a good faith belief, that a preexamination search in compliance with the following requirements, was conducted, including an identification of the field of search by United States class and subclass, where applicable, and for database searches, the search logic or chemical structure or sequence used as a query, the name of the file(s) searched and the database service, and the date of the search. The preexamination search must:

5.1 involve U.S. patents and patent application publications, foreign patent documents, and non-patent literature, unless the applicant can justify with reasonable certainty that no references more pertinent than those already identified are likely to be found in the eliminated sources and includes such a justification with this statement;

5.2. be directed to the claimed invention and encompass all of the features of the claims, giving the claims the broadest reasonable expectation;

5.3. encompass the disclosed features that may be claimed.

6. must provide in support of the petition an accelerated examination support document.

An accelerated examination support document must include:

6.1. an information disclosure statement (IDS) in compliance with 37 CFR 1.98 citing each reference deemed most closely related to the subject matter of each of the claims;

6.2. an identification of all the limitations in the claims that are disclosed by the reference specifying where the limitation is disclosed in the cited reference;

6.3. a detailed explanation of how each of the claims are patentable over the references cited with particularity required by 37 CFR 1.111(b) and (c);

6.4. a concise statement of the utility of the invention as defined in each of the independent claims (unless the application is a design application);

6.5. a showing of where each limitation of the claims finds support under 35 USC 112, first paragraph, in the written description of the specification. If applicable, the showing must also identify: (1) each means- (or step) plus-function claim element that invokes consideration under 35 UDC 112, sixth paragraph; and (2) the structure, material, or acts in the specification that corresponds to

each means- (or step) plus-function claim element that invokes consideration under 35 UDC 112, sixth paragraph; if the application claims the benefit of one or more applications under title 35, United States Code, the showing must also include where each limitation of the claims finds support under 35 USC 112, first paragraph, in each such application in which such supports exists;
6.6. an identification of any cited references that may be disqualified under 35 USC 103(c).

REVIEW OF FACTS

The petition in this case fails to comply with conditions II.5.2, II.6.3, and II.6.5.

As to condition II.5.2, the petition lacks an indication of a preexamination search that encompasses all of the features of the claims. With respect to the classification search, in addition to the search of class 119, the search also needs to include at least an entire search of: 132/137-142, 148, 160 and 161. Furthermore, With respect to the required text search of the US Patents database, the petition provides search logic that is inadequate. The search appears to be too specific to be considered an acceptable search. The USPTO website has an example of the proper manner of performing and documenting a preexamination search for Accelerated Examination petitions at: http://www.uspto.gov/web/patents/accelerated/. Additionally, an example of acceptable search logic is provided below:

(pull$3 tug$4 extract$3 shed$4) same (hair fur coat) same (comb brush tool) with combinations such as:
(horse cattle livestock dog cat cow)
(tooth teeth tine$1 bristle$1)

The sample of search logic is not meant to be the sole search logic that can or should be employed in this application, but is meant solely as an example for applicant's assistance. The sample search logic provided above can also apply to searching the NPL databases.

Finally, because it is necessary to look for every limitation claimed, the indication in the Support Document that limitations (or partial limitations) such as the limitations of claims outlined below, for example, are not found in any of the cited references exposes evidence of the search not encompassing the claimed invention.

1 - "the first and second plates superimposed" can be found
- "a roughness sufficient" deemed to be an inherent feature of a comb (i.e. friction) until more particularly claimed
10 - handle in an arcuate shape can be found
13 - superimposed plates - can be found
14 - equally spaced teeth - can be found
15 - can be found, per claim 1

16 - alignment holes can be found (prior art showing has been found in class 132)
17 - inherent in the structure of a comb
18 - handle forming can be found
19 - metal stamping is a notoriously well known method which should easily be found
20 - die cutting plastic is notoriously well known method which should easily be found

At least the above noted claim limitations seem to contain elements that the examiner assigned this case believes are quite common and it strains credulity to assert that nowhere in the prior art are located these additional claimed limitations. While a reference containing a specific limitation of any one claim may not result in a rejection of the claim, not finding the structure at all calls into question the sufficiency of the search. It appears that the search may have been completed on the concept of the disclosed invention rather than the "claimed invention" as is required.

As to condition II.6.3, there is not a satisfactory detailed explanation of claim patentability over each of the references. The explanation needs to specify how each of the claims (not just the independent claims) are patentable over each of the cited references, which includes the need to specify whether each of the dependent claims are separately patentable beyond the limitations contained in the independent claims, and if so how, or a statement made that the dependent claims are not separately patentable. It is not clear if the applicant believes that the dependent claims 2-3, 5-9 and 11-12 are separately patentable, and if so, how, as there is no indication that they are not separately patentable.

As to condition to II.6.5, the showing of where each limitation of each of the claims finds support under 35 USC 112 in the written description of the application is insufficient. For each claimed limitation (including dependent claims) the petition needs to identify specific passages, or at least a single paragraph where each limitation is supported. Listing broadly a group of figures does not comply with what is required. Similar support (if any) for the claimed invention must additionally be shown in the parent application upon which priority is claimed under 35 USC 119. Specifically, for provisional application 61/326,665, a listing of where the limitations of the claims find support is necessary.

The petition fails to meet the required conditions to be accorded special status under the accelerated examination procedure.

DECISION

For the above stated reasons, the petition is **DISMISSED**. The application will therefore be taken up by the examiner for action in its regular turn.

Petitioner is given a single opportunity to perfect the petition. Any request for reconsideration of this decision must be submitted within one (1) month or thirty (30) days, whichever is longer, from the date of this decision. No extensions of time will be granted under 37 CFR 1.136(a) if the request is to be considered timely. Any request for reconsideration must address the deficiencies indicated above.

Petitioner is reminded that, upon granting of the special status of the application on request for reconsideration, the application will be processed expeditiously. However, due to the dismissal of the instant petition, examination may not be completed within twelve months of the filing date of the application.

Any inquiry regarding this decision should be directed to Steven N. Meyers at (571) 272-6611.

Steven N. Meyers
Quality Assurance Specialist
Technology Center 3600

Snm:3/6/11

UNITED STATES PATENT AND TRADEMARK OFFICE

UNITED STATES DEPARTMENT OF COMMERCE
United States Patent and Trademark Office
Address: COMMISSIONER FOR PATENTS
P.O. Box 1450
Alexandria, Virginia 22313-1450
www.uspto.gov

| APPLICATION NO. | FILING DATE | FIRST NAMED INVENTOR | ATTORNEY DOCKET NO. | CONFIRMATION NO. |
|---|---|---|---|---|
| 13/010,767 | 01/20/2011 | Chi Kin John MAK | JM-1007-USPT | 3359 |

76870 7590 04/12/2011

B.Y.I.P. LTD.
P.O. Box 1484
General Post Office
Hong Kong, 00000
HONG KONG

| EXAMINER | |
|---|---|
| SMITH, KIMBERLY S | |
| **ART UNIT** | **PAPER NUMBER** |
| 3644 | |

| NOTIFICATION DATE | DELIVERY MODE |
|---|---|
| 04/12/2011 | ELECTRONIC |

**Please find below and/or attached an Office communication concerning this application or proceeding.**

The time period for reply, if any, is set in the attached communication.

Notice of the Office communication was sent electronically on above-indicated "Notification Date" to the following e-mail address(es):

CHO@BARRON-YOUNG.COM
charlesho@barron-young.com
LWang@barron-young.com

UNITED STATES PATENT AND TRADEMARK OFFICE

Commissioner for Patents
United States Patent and Trademark Office
P.O. Box 1450
Alexandria, VA 22313-1450
www.uspto.gov

APR 1 1 2011

B.Y.I.P. Ltd.
P.O. Box 1484
General Post Office
Hong Kong, Hong Kong 00000

| | | |
|---|---|---|
| In re application of | : | **DECISION ON PETITION** |
| Chi Kin John Mak | : | **TO MAKE SPECIAL FOR** |
| Application No. 13/010,767 | : | **NEW APPLICATION** |
| Filed: January 20, 2011 | : | **UNDER 37 CFR 1.102** |
| For: DE-SHEDDING TOOL AND METHOD OF MANUFACTURING THE SAME | | |

This is a decision on the renewed petition filed on April 7, 2011, to make the above-identified application special for accelerated examination procedure under 37 C.F.R. § 1.102(d).

The renewed petition to make the application special is **GRANTED**.

The application is eligible for accelerated examination and the petition complies with the conditions for granting the application special status pursuant to the "Change to Practice for Petitions in Patent Applications to Make Special and for Accelerated Examination" published June 26, 2006, in the Federal Register. (71 Fed. Reg. 36323).

The prosecution of the instant application will be conducted expeditiously according to the following guidelines.

1. The application will be docketed to an examiner and taken up for action within two weeks of the date of this decision.

2. Restriction Practice:
If the examiner determines that the claims are not directed to a single invention, a telephone request to elect one single invention will be made pursuant to MPEP 812.01. As a prerequisite to the grant of this petition, the applicant has agreed to make an oral election, by telephone, without traverse. If the applicant refuses to make an election without traverse, or the examiner cannot reach the applicant

after a reasonable effort, the examiner will treat the first claimed invention (invention defined by claim 1) as having being constructively elected without traverse for examination.

3. Office action:
If it is determined that, after appropriate consultation, there is a potential rejection or any other issue to be addressed, the examiner will telephone the applicant and arrange an interview to discuss and resolve the issue. An Office action, other than a Notice of Allowance and Fee(s) Due (Notice of Allowance), will not be issued unless either: 1) an interview was conducted but did not result in agreed to action that places the application in condition for allowance, or, 2) a determination is made that an interview would be unlikely to result in the application being placed in condition for allowance, and 3) an internal conference has been held to review any rejection of any claim.

4. Time for Reply:
An Office action other than a Notice of Allowance or a final Office action will set a shortened statutory period of one month or thirty days, whichever is longer, for reply with no extension of time available under 37 CFR 1.136(a). Failure to timely file a reply within this non-extendible period for reply will result in the abandonment of the application.

5. Reply by Applicant:
A timely reply to an Office action other than the Notice of Allowance must be submitted electronically via EFS or EFS-web and limited to addressing the rejections, objections and requirement made. Any amendment that attempts to: 1) add claims which would result in more than three pending independent claims or more than twenty pending total claims; 2) present claims not encompassed by the pre-examination search or an updated accelerated examination support document; or 3) present claims that are directed to a non-elected invention or an invention other than that previously claimed and examined in the application, will be treated as not fully responsive and will not be entered.

For any amendment to the claims (including any new claim) that is not encompassed by the accelerated examination support document, applicant must provide an updated accelerated examination support document that encompasses the amended or new claims at the time of filing of the amendment.

To proceed expeditiously with the examination, it is recommended that a reply with amendments made to any claim or with any new claim being added be accompanied by an updated accelerated examination support document or a statement explaining how the amended or new claim is supported by the original accelerated examination support document.

6. Information Disclosure Statement (IDS):
Any IDS filed during prosecution must be submitted electronically via EFS or EFS-web, accompanied by an updated accelerated examination support document, and be in compliance with 37 CFR 1.97 and 1.98.

7. Post-Allowance Processing:
To expedite processing of the allowed application into a patent, the applicant must: 1) pay the required fees within one month of the date of the Notice of Allowance, and 2) not file any post allowance papers not required by the Office. In no event may the issue fee be paid and accepted later than three months from the date of the Notice of Allowance.

8. After-Final and Appeal Procedures:
To expedite prosecution, after receiving the final Office action, applicant must: 1) promptly file a notice of appeal, an appeal brief and appeal fees; and 2) not request a pre-appeal brief conference.

Any amendment, affidavit or other evidence filed after final Office action must comply with applicable rules and the requirements outlined in numbered paragraphs 5 and 6 above.

On appeal, the application will proceed according to normal appeal procedures. After appeal, the application will again be treated special.

9. Proceedings Outside the Normal Examination Process:
If the application becomes involved in a proceeding that is outside the normal examination process (e.g., a secrecy order, national security review, interference proceeding, petitions under 37 CFR 1.181, 182 or 183), the application will be treated special before and after such proceeding.

10. Final Disposition:
The twelve month goal of this accelerated examination procedure ends with a final disposition. The mailing of a final Office action, a Notice of Allowance, the filing of a Notice of Appeal, or the filing of a Request for Continued Examination (RCE) is the final disposition.

If, during prosecution, a paper is not filed electronically using EFS-web, a reply is filed but is not fully responsive, the application is involved in an appeal, or a proceeding outside normal examination process, the application will still be examined expeditiously, however, the final disposition may occur more than twelve months from the filing of the application.

Any inquiry regarding this decision should be directed to Quality Assurance Specialist Steven N. Meyers, at (571) 272-6611.

Steven N. Meyers,
Quality Assurance Specialist
Technology Center 3600

Sm/sm: 4/11/11

UNITED STATES PATENT AND TRADEMARK OFFICE

Commissioner for Patents
United States Patent and Trademark Office
P.O. Box 1450
Alexandria, VA 22313-1450
www.uspto.gov

MAILED
MAR 26 2012
OFFICE OF PETITIONS

QUINN LAW GROUP, PLLC
39555 ORCHARD HILL PLACE
SUITE # 520
NOVI, MI 48375

In re Application of :
Venkatababji Sama :
Application No. 13/010,826 : NOTICE
Filed: January 21, 2011 :
Attorney Docket No. ARC0112PUSP :

This is a notice regarding your request for acceptance of a fee deficiency submission under 37 CFR 1.28. On September 1, 1998, the Court of Appeals for the Federal Circuit held that 37 CFR 1.28(c) is the sole provision governing the time for correction of the erroneous payment of the issue fee as a small entity. **See DH Technology v. Synergystex International, Inc. 154 F.3d 1333, 47 USPQ2d 1865 (Fed. Cir. Sept. 1, 1998).**

The Office no longer investigates or rejects original or reissue applications under 37 CFR 1.56. **1098 Off. Gaz. Pat. Office 502 (January 3, 1989)**. Therefore, nothing in this Notice is intended to imply that an investigation was done.

Your fee deficiency submission under 37 CFR 1.28 is hereby **ACCEPTED**.

This application is no longer entitled to small entity status. Accordingly, all future fees paid in this application must be paid at the large entity rate.

Inquiries related to this communication should be directed to the undersigned at (571) 272-1642.

/AMW/
April M. Wise
Petitions Examiner
Office of Petitions

UNITED STATES PATENT AND TRADEMARK OFFICE

Commissioner for Patents
United States Patent and Trademark Office
P.O. Box 1450
Alexandria, VA 22313-1450
www.uspto.gov
DIW Apr-11

MAILED

APR 25 2011

OFFICE OF PETITIONS

LAW OFFICE OF GEROW BRILL
20 OAKMONT CIRCLE
NEW FREEDOM PA 17349

In re Application of :
Roshan Jachuck :
Application Number: 13/010,967 : ON PETITION
Deposited: 01/21/2011 :
Attorney Docket Number: JACHUCKJ-2DIV :
:

This is a decision in response to the PETITION TO ADD INADVERTENTLY OMITTED MATERIAL, filed on March 15, 2011, requesting that the application be accorded a filing date. This petition is being treated pursuant to 37 CFR 1.53(e)(2)[1].

Application papers in the above-identified application were deposited on January 21, 2011. However, on March 11, 2011, the Office of Patent Application Processing mailed applicants a "Notice of Incomplete Nonprovisional Application," notifying applicants that the application papers had not been accorded a filing date because the application was deposited without drawings. In response, applicants timely filed this petition. Applicants petition the Director for a filing date of January 21, 2011, under 37 CFR 1.57(a). Applicants request that the application be amended to include the inadvertently omitted drawings on the basis that the application as filed contained a prior benefit claim under 37 CFR 1.55 or 1.78. Applicants further state that drawings are not required for an understanding of the subject matter sought to be patented.

[1] Any request for review of a notification pursuant to paragraph (e)(1) of this section, or a notification that the original application papers lack a portion of the specification or drawing(s), must be by way of a petition pursuant to this paragraph accompanied by the fee set forth in § 1.17(f). In the absence of a timely (§ 1.181(f)) petition pursuant to this paragraph, the filing date of an application in which the applicant was notified of a filing error pursuant to paragraph (e)(1) of this section will be the date the filing error is corrected.

Petitioner's arguments and evidence have been considered. However, a review of the application confirms that, as filed, the application contained at least one method claim. MPEP 601.01(f) provides that:

> It has been USPTO practice to treat an application that contains at least one process or method claim as an application for which a drawing is not necessary for an understanding of the invention under 35 U.S.C. 113 (first sentence).

Thus, pursuant to § 601.01(f), a drawing is not considered essential for a filing date. The instant application is entitled to a filing date without drawings present in the application.

Accordingly, the Office should have granted the application a filing date and mailed a Notice of Omitted Items instead of a Notice of Incomplete Nonprovisional Application. As stated in MPEP 601.01(g) under the section entitled, "Application Entitled to a Filing Date," applicant may submit an amendment to include the inadvertently omitted portion of the drawing(s) pursuant to 37 CFR 1.57(a):

> [i]f an application was filed on or after September 21, 2004, and contains a claim under 37 CFR 1.55 for priority of a prior-filed foreign application, or a claim under 37 CFR 1.78 for the benefit of a prior-filed provisional, nonprovisional, or international application that was present on the filing date of the application, and the omitted portion of the drawing(s) was inadvertently omitted from the application and is completely contained in the prior-filed application[.]

Please note that no petition is required and that the amendment must comply with 37 CFR 1.57(a) and 37 CFR 1.121. See MPEP § 201.17. Any amendment to include the inadvertently omitted drawing(s) will be considered by the examiner.

Petitioners may wish to consider filing a preliminary amendment to enter the inadvertently omitted drawings. Any amendment to include the inadvertently omitted drawing(s) will be considered by the examiner.

To the extent the instant petition requests a filing date of January 21, 2011, with no drawings present in the application, the petition is **GRANTED**.

Given the basis for granting this petition, the petition fee is being refunded.

Receipt of the preliminary amendment filed on March 15, 2011 is acknowledged.

Pursuant to this decision, the application will be referred to Office of Patent Application Processing for:

- **correction of the filing date to January 21, 2011**;

- **for indication in Office records, as appropriate, that "0" sheets of drawings were present on filing** and
- **for issuance of a filing receipt.**

Telephone inquiries concerning this matter may be directed to Senior Petitions Attorney Douglas I. Wood at (571) 272-3231.

Christopher Bottorff
Petitions Examiner
Office of Petitions

UNITED STATES PATENT AND TRADEMARK OFFICE

UNITED STATES DEPARTMENT OF COMMERCE
United States Patent and Trademark Office
Address: COMMISSIONER FOR PATENTS
P.O. Box 1450
Alexandria, Virginia 22313-1450
www.uspto.gov

| APPLICATION NO. | FILING DATE | FIRST NAMED INVENTOR | ATTORNEY DOCKET NO. | CONFIRMATION NO. |
|---|---|---|---|---|
| 13/011,008 | | Vladimir Nikolaevich Rubochkin | | 3795 |

7590 01/25/2011

Vladimir Rubochkin
ul.Derzhavina, dom 9, kv 5
Ulyanovsk, 432012
RUSSIAN FEDERATION

| EXAMINER | |
|---|---|
| ART UNIT | PAPER NUMBER |
| 3764 | |

| MAIL DATE | DELIVERY MODE |
|---|---|
| 01/25/2011 | PAPER |

**Please find below and/or attached an Office communication concerning this application or proceeding.**

The time period for reply, if any, is set in the attached communication.

UNITED STATES PATENT AND TRADEMARK OFFICE

Commissioner for Patents
United States Patent and Trademark Office
P.O. Box 1450
Alexandria, VA 22313-1450
www.uspto.gov

Vladimir Rubochkin
ul.Derzhavina, dom 9, kv 5
Ulyanovsk 43201-2 RU

| | | |
|---|---|---|
| In re Application of | : | |
| RUBOCHKIN, VLADIMIR NIKOLAEVICH | : | DECISION ON REQUEST TO |
| Application No. 13/011,008 | : | PARTICIPATE IN PATENT |
| Filed: Jan. 21, 2011 | : | PROSECUTION HIGHWAY |
| Attorney Docket No. n/a | : | PROGRAM AND PETITION |
| For FOOTREST FOR PREVENTION OF DISORDERS OF VENOUS BLOOD FLOW: OF VARICOSE VEIN AND DEEP VEIN THROMBOSIS OF FEET | : | 37 CFR 1.102(a) |

This is a decision on the request to participate in the Patent Prosecution Highway (PPH) program and the petition under 37 CFR 1.102(a), filed January 21, 2011 to make the above-identified application special.

The request and petition are **dismissed**.

A grantable request to participate in the PPH pilot program and petition to make special require:

(1) The U.S. application must validly claim priority under 35 U.S.C. 119(a) to one or more applications filed in the Rospatent;
(2) Applicant must submit a copy of the allowable/patentable claim(s) from the Rospatent application(s) along with an English translation thereof and a statement that the English translation is accurate;
(3) All the claims in the U.S. application must sufficiently correspond or be amended to sufficiently correspond to the allowable/patentable claim(s) in the Rospatent application(s);
(4) Examination of the U.S. application has not begun;
(5) Applicant must submit a copy of all the office actions from each of the Rospatent application(s) containing the allowable/patentable claim(s) along with an English translation thereof and a statement that the English translation is accurate; and
(6) Applicant must submit an IDS listing the documents cited by the Rospatent examiner in the Rospatent office action along with copies of documents except U.S. patents or U.S. patent application publications.

The request to participate in the PPH program and petition met all conditions except Items #2, #3 and #6 above.

The request to participate in the PPH pilot program and petition fail to include a copy of the JPO allowed claims in Russian language and certified English.

With regard to Items #2 and #3, all the claims in the U.S. application must sufficiently correspond or be amended to sufficiently correspond to the allowable/patentable claim(s) in the Rospatent application(s). Currently, there are no claims 1-13 in English language nor in Russian language.

Applicant must submit a copy of all the office actions from each of the Rospatent application(s) containing the allowable/patentable claims 1-13 along with an English translation thereof and a statement that the English translation is accurate. Claims 1-13 are missing.

An IDS listing the prior art references and copies of the cited references cited by the Russian patent office are required. A copy of EP 277266 A1, RU 2005141536 A, 07/20/2007 SU 660665 A, 05/05/1979; RU 2320310 C2, 03/27/2008 SU 1602459 A1, 10/30/1990 is required.

This application is undergoing a pre-examination processing. The applicant is encouraged to cite and submit all relevant prior art references, if any, to facilitate examination in this application.

Applicant is given a time period of **ONE MONTH or THIRTY DAYS**, whichever is longer, from the mailing date of this decision to correct the deficiencies. **NO EXTENSION OF TIME UNDER 37 CFR 1.136 IS PERMITTED.** If the deficiencies are not corrected with the time period given, the application will await action in its regular turn.

Response must be filed via EFS-Web. Telephone inquiries concerning this decision should be directed to Henry C. Yuen, at 571-272-4856.

/Henry C. Yuen/

Henry C. Yuen
Special Programs Examiner
Technology Center 3700
Tel: 571-272-4856

UNITED STATES PATENT AND TRADEMARK OFFICE

UNITED STATES DEPARTMENT OF COMMERCE
United States Patent and Trademark Office
Address: COMMISSIONER FOR PATENTS
P.O. Box 1450
Alexandria, Virginia 22313-1450
www.uspto.gov

| APPLICATION NO. | FILING DATE | FIRST NAMED INVENTOR | ATTORNEY DOCKET NO. | CONFIRMATION NO. |
|---|---|---|---|---|
| 13/011,008 | 01/21/2011 | Vladimir Nikolaevich Rubochkin | | 3795 |

7590 02/24/2011

Vladimir Rubochkin
ul.Derzhavina, dom 9, kv 5
Ulyanovsk, 432012
RUSSIAN FEDERATION

| EXAMINER | |
|---|---|
| ART UNIT | PAPER NUMBER |
| 3764 | |

| MAIL DATE | DELIVERY MODE |
|---|---|
| 02/24/2011 | PAPER |

**Please find below and/or attached an Office communication concerning this application or proceeding.**

The time period for reply, if any, is set in the attached communication.

UNITED STATES PATENT AND TRADEMARK OFFICE

Commissioner for Patents
United States Patent and Trademark Office
P.O. Box 1450
Alexandria, VA 22313-1450
www.uspto.gov

Vladimir Rubochkin
ul.Derzhavina, dom 9, kv 5
Ulyanovsk 43201-2 RU

| | | |
|---|---|---|
| In re Application of | : | |
| RUBOCHKIN, VLADIMIR NIKOLAEVICH | : | DECISION ON REQUEST TO |
| Application No. 13/011,008 | : | PARTICIPATE IN PATENT |
| Filed: Jan. 21, 2011 | : | PROSECUTION HIGHWAY |
| Attorney Docket No. n/a | : | PROGRAM AND PETITION |
| For FOOTREST FOR PREVENTION OF DISORDERS OF VENOUS BLOOD FLOW: OF VARICOSE VEIN AND DEEP VEIN THROMBOSIS OF FEET | : | 37 CFR 1.102(a) |

This is a decision on the renewed request to participate in the Patent Prosecution Highway (PPH) program and the petition under 37 CFR 1.102(a), filed Feb. 18, 2011 to make the above-identified application special.

The request and petition are **granted**.

A grantable request to participate in the PPH pilot program and petition to make special require:

(1) The U.S. application must validly claim priority under 35 U.S.C. 119(a) to one or more applications filed in the Rospatent;
(2) Applicant must submit a copy of the allowable/patentable claim(s) from the Rospatent application(s) along with an English translation thereof and a statement that the English translation is accurate;
(3) All the claims in the U.S. application must sufficiently correspond or be amended to sufficiently correspond to the allowable/patentable claim(s) in the Rospatent application(s);
(4) Examination of the U.S. application has not begun;
(5) Applicant must submit a copy of all the office actions from each of the Rospatent application(s) containing the allowable/patentable claim(s) along with an English translation thereof and a statement that the English translation is accurate; and
(6) Applicant must submit an IDS listing the documents cited by the Rospatent examiner in the Rospatent office action along with copies of documents except U.S. patents or U.S. patent application publications.

In light of the petition being properly submitted, the request to participate in the PPH program and the petition comply with the above requirements. Accordingly, the above-identified application has been accorded "special" status.

The applicant is encouraged to cite and submit all relevant prior art references, if any, to facilitate examination in this application. This application will be forwarded to an examiner for examination.

This application is currently undergoing pre-examination processing. Upon completion, the application will be forwarded to examiner for examination.

Telephone inquiries concerning this decision should be directed to Henry C. Yuen at 571-272-4856. All other inquiries concerning the examination or status of the application should be directed to LoAn Thanh, SPE of Art Unit 3764, and 571-272-4966 for Class 482/57 and also accessible in the PAIR system at http://www.uspto.gov/ebc.index.html.

Petition is **granted**.

/Henry C. Yuen/

_____

Henry C. Yuen, Special Programs Examiner
Technology Center 3700 – Mechanical Engineering,
Manufacturing and Products
571-272-4856

**Doc Code: PPH.PCT.652**
**Document Description: Petition to make special under PCT-Patent Pros Hwy**

PTO/SB/20PCT-KR (06-10)
Approved for use through 01/31/2012. OMB 0651-0058
U.S. Patent and Trademark Office; U. S. DEPARTMENT OF COMMERCE
Under the Paperwork Reduction Act of 1995, no persons are required to respond to a collection of information unless it displays a valid OMB control number.

# REQUEST FOR PARTICIPATION IN THE PATENT COOPERATION TREATY - PATENT PROSECUTION HIGHWAY (PCT-PPH) PILOT PROGRAM BETWEEN THE KOREAN INTELLECTUAL PROPERTY OFFICE (KIPO) AND THE USPTO

| | | | |
|---|---|---|---|
| Application No: | 13/011,076 | Filing date: | 21 January 2011 |
| First Named Inventor: | Ray Fertig | | |
| Title of the Invention: | AUTOMATED METHOD TO DETERMINE COMPOSITE MATERIAL CONSTITUENT PROPERTIES | | |

**THIS REQUEST FOR PARTICIPATION IN THE PCT-PPH PILOT PROGRAM ALONG WITH THE REQUIRED DOCUMENTS MUST BE SUBMITTED VIA EFS-WEB. INFORMATION REGARDING EFS-WEB IS AVAILABLE AT HTTP://WWW.USPTO.GOV/EBC/EFS_HELP.HTML**

**APPLICANT HEREBY REQUESTS PARTICIPATION IN THE PCT-PPH PROGRAM AND PETITIONS TO MAKE THE ABOVE-IDENTIFIED APPLICATION SPECIAL UNDER THE PCT-PPH PROGRAM.**

The above-identified application is (1) a national stage entry of the corresponding PCT application, or (2) a national stage entry of another PCT application which claims priority to the corresponding PCT application, or (3) a national application that claims domestic/ foreign priority to the corresponding PCT application, or (4) a national application which forms the basis for the priority claim in the corresponding PCT application, or (5) a continuing application of a U.S. application that satisfies one of (1) to (4) above, or (6) a U.S. application that claims domestic benefit to a U.S. provisional application which forms the basis for the priority claim in the corresponding PCT application.

**The corresponding PCT application number(s) is/are:** PCT/US2011/022011

**The international filing date of the corresponding PCT application(s) is/are:**
21 January 2011

**I. List of Required Documents:**

a. **A copy of the latest international work product (WO/ISA, WO/IPEA, or IPER) in the above–identified corresponding PCT application(s)**

☑ Is attached.

☐ Is not attached because the document is already in the U.S. application.

b. **A copy of all claims which were indicated as having novelty, inventive step and industrial applicability in the above-identified corresponding PCT application(s).**

☑ Is attached.

☐ Is not attached because the document is already in the U.S. application.

c. **English translations of the documents in a. and b. above are attached (if the documents are not in the English language). A statement that the English translation is accurate is attached for the document in b. above.**



This collection of information is required by 35 U.S.C. 119, 37 CFR 1.55, and 37 CFR 1.102(d). The information is required to obtain or retain a benefit by the public, which is to file (and by the USPTO to process) an application. Confidentiality is governed by 35 U.S.C. 122 and 37 CFR 1.11 and 1.14. This collection is estimated to take 2 hours to complete, including gathering, preparing, and submitting the completed application form to the USPTO. Time will vary depending upon the individual case. Any comments on the amount of time you require to complete this form and/or suggestions for reducing this burden should be sent to the Chief Information Officer, U.S. Patent and Trademark Office, U.S. Department of Commerce, P.O. Box 1450, Alexandria, VA 22313-1450. DO NOT SEND FEES OR COMPLETED FORMS TO THIS ADDRESS.

PTO/SB/20PCT-KR (06-10)
Approved for use through 01/31/2012. OMB 0651-0058
U.S.Patent and Trademark Office; U.S. DEPARTMENT OF COMMERCE
Under the Paperwork Reduction Act of 1995, no persons are required to respond to a collection of information unless it displays a valid OMB control number.

# REQUEST FOR PARTICIPATION IN THE PCT-PPH PILOT PROGRAM BETWEEN THE KIPO AND THE USPTO

(continued)

| | |
|---|---|
| Application No.: | 13/011,076 |
| First Named Inventor: | Ray Fertig |

d. **(1) An information disclosure statement listing the documents cited in the international work products (ISR, WO/ISA, WO/IPEA, IPER) of the corresponding PCT application.**

☑ Is attached

☐ Has already been filed in the above-identified U.S. application on _____

**(2) Copies of all documents (except) for U.S. patents or U.S. patent application publications)**

☑ Are attached.

☐ Have already been filed in the above-identified U.S. application on _____

## II. Claims Correspondence Table:

| Claims in US Application | Patentable Claims in the corresponding PCT Application | Explanation regarding the correspondence |
|---|---|---|
| 9 | 1 | is same as |
| 10 | 2 | is same as |
| 11 | 3 | is same as |
| 12 | 4 | is same as |
| 13 | 5 | is same as |
| 5 | 6 | is same as |
| 6 | 7 | is same as |
| 7 | 8 | is same as |
| | | |
| | | |
| | | |
| | | |
| | | |
| | | |
| | | |
| | | |
| | | |
| | | |

**III. All the claims in the US application sufficiently correspond to the patentable claims in the corresponding PCT application.**

| | |
|---|---|
| Signature /David C. Peterson/ | Date 11/21/2011 |
| Name (Print/Typed) David C. Peterson | Registration Number 47,857 |

# Privacy Act Statement

The **Privacy Act of 1974 (P.L. 93-579)** requires that you be given certain information in connection with your submission of the attached form related to a patent application or patent. Accordingly, pursuant to the requirements of the Act, please be advised that: (1) the general authority for the collection of this information is 35 U.S.C. 2(b)(2); (2) furnishing of the information solicited is voluntary; and (3) the principal purpose for which the information is used by the U.S. Patent and Trademark Office is to process and/or examine your submission related to a patent application or patent. If you do not furnish the requested information, the U.S. Patent and Trademark Office may not be able to process and/or examine your submission, which may result in termination of proceedings or abandonment of the application or expiration of the patent.

The information provided by you in this form will be subject to the following routine uses:

1. The information on this form will be treated confidentially to the extent allowed under the Freedom of Information Act (5 U.S.C. 552) and the Privacy Act (5 U.S.C 552a). Records from this system of records may be disclosed to the Department of Justice to determine whether disclosure of these records is required by the Freedom of Information Act.
2. A record from this system of records may be disclosed, as a routine use, in the course of presenting evidence to a court, magistrate, or administrative tribunal, including disclosures to opposing counsel in the course of settlement negotiations.
3. A record in this system of records may be disclosed, as a routine use, to a Member of Congress submitting a request involving an individual, to whom the record pertains, when the individual has requested assistance from the Member with respect to the subject matter of the record.
4. A record in this system of records may be disclosed, as a routine use, to a contractor of the Agency having need for the information in order to perform a contract. Recipients of information shall be required to comply with the requirements of the Privacy Act of 1974, as amended, pursuant to 5 U.S.C. 552a(m).
5. A record related to an International Application filed under the Patent Cooperation Treaty in this system of records may be disclosed, as a routine use, to the International Bureau of the World Intellectual Property Organization, pursuant to the Patent Cooperation Treaty.
6. A record in this system of records may be disclosed, as a routine use, to another federal agency for purposes of National Security review (35 U.S.C. 181) and for review pursuant to the Atomic Energy Act (42 U.S.C. 218(c)).
7. A record from this system of records may be disclosed, as a routine use, to the Administrator, General Services, or his/her designee, during an inspection of records conducted by GSA as part of that agency's responsibility to recommend improvements in records management practices and programs, under authority of 44 U.S.C. 2904 and 2906. Such disclosure shall be made in accordance with the GSA regulations governing inspection of records for this purpose, and any other relevant ( *i.e.*, GSA or Commerce) directive. Such disclosure shall not be used to make determinations about individuals.
8. A record from this system of records may be disclosed, as a routine use, to the public after either publication of the application pursuant to 35 U.S.C. 122(b) or issuance of a patent pursuant to 35 U.S.C. 151. Further, a record may be disclosed, subject to the limitations of 37 CFR 1.14, as a routine use, to the public if the record was filed in an application which became abandoned or in which the proceedings were terminated and which application is referenced by either a published application, an application open to public inspection or an issued patent.
9. A record from this system of records may be disclosed, as a routine use, to a Federal, State, or local law enforcement agency, if the USPTO becomes aware of a violation or potential violation of law or regulation.

UNITED STATES PATENT AND TRADEMARK OFFICE

Commissioner for Patents
United States Patent and Trademark Office
P.O. Box 1450
Alexandria, VA 22313-1450
www.uspto.gov

MAILED

FEB 07 2012

OFFICE OF PETITIONS

SCHWEGMAN, LUNDBERG &
WOESSNER, P.A.
P.O. BOX 2938
MINNEAPOLIS MN 55402

: DECISION ON REQUEST TO
: PARTICIPATE IN THE PATENT
: PROSECUTION HIGHWAY
: PROGRAM AND PETITION
: TO MAKE SPECIAL UNDER
: 37 CFR 1.102(a)

**In re Application of**
**Ray Fertig et al.**
**Application No.: 13/011,076**
**Filed: January 21, 2011**
**Attorney Docket No.: 3014.002US1**
**For: Automated Method to Determine Composite Material Constituent Properties**

This is a decision on the request to participate in the PCT Patent Prosecution Highway (PCT-PPH) pilot program and the petition under 37 CFR 1.102(a), filed on November 21, 2011 to make the above-identified application special.

The request and petition are **GRANTED**.

## Discussion

A grantable request to participate in the PCT-PPH pilot program and petition to make special require:

1) The U.S. application must have an eligible relationship to one or more PCT applications where the ISA or IPEA are Australia, Austria, China, EPO, Finland, JPO, Korea, NPI, Russia, Spain, Sweden and the USPTO;

(2) At least one claim in the PCT application has novelty, inventive step, and industrial applicability and must be free of any observations in Box VIII in the latest work product in the international stage or applicant must identify and explain why the claim(s) is/are not subject to the observation in Box VIII;

(3) Applicant must submit a copy of the claim(s) from the PCT application(s) that have novelty, inventive step, and industrial applicability along with an English translation thereof and a statement that the English translation is accurate, if the claims are not in the English language;

(4) All the claims in the U.S. application must sufficiently correspond or be amended to sufficiently correspond to the claim(s) that have novelty, inventive step, and industrial applicability in the PCT application(s);

(5) Examination of the U.S. application has not begun;

(6) Applicant must submit a copy of the latest international work product from the PCT application indicating that the claim(s) have novelty, inventive step, and industrial applicability along with an English translation thereof and a statement that the English translation is accurate if the latest international work product is not in the English language;

(7) Applicant must submit an IDS listing the documents cited by the PCT examiner in the international work product along with copies of documents except U.S. patents or U.S. patent application publications.

The request to participate in the PCT-PPH pilot program and petition comply with the above requirements. Accordingly, the above-identified application has been accorded "special" status.

Telephone inquiries concerning this decision should be directed to Kimberly Inabinet at 571-272-4618.

All other inquiries concerning the examination or status of the application is accessible in the PAIR system at http://www.uspto.gov/ebc.index.html.

This application will be forwarded to the examiner for action on the merits commensurate with this decision.

David Bucci
Petitions Examiner
Office of Petitions

UNITED STATES PATENT AND TRADEMARK OFFICE

Commissioner for Patents
United States Patent and Trademark Office
P.O. Box 1450
Alexandria, VA 22313-1450
www.uspto.gov

ROBINSON INTELLECTUAL
PROPERTY LAW OFFICE PC
3975 FAIR RIDGE DRIVE
SUITE 20 NORTH
FAIRFAX VA 22033

MAILED
FEB 21 2012
OFFICE OF PETITIONS

| | | |
|---|---|---|
| In re Application of | : | **DECISION** |
| Shimomura, et al. | : | **ON PETITION** |
| Application No. 13/011,179 | : | |
| Filed: January 21, 2011 | : | **ACCEPTANCE OF** |
| Attorney Docket Number: 0756-9127 | : | **COLOR DRAWINGS** |

This is in response to the petition under 37 CFR 1.84(a)(2), filed January 24, 2011, for acceptance of color drawings.

The petition is **GRANTED**.

A grantable petition under 37 C.F.R. 1.84(a)(2) must be accompanied by the following:

(1) The fee set forth in 37 C.F.R. 1.17(h);

(2) Three (3) sets of color drawings, or one (1) set if filed via EFS, and

(3) The specification contains appropriate language referring to the color drawings as the first paragraph in that portion of the specification relating to the brief description of the drawings.

Here, the petition was accompanied by the required fee and drawings. The specification contains the appropriate language. Therefore, the petition is granted.

The application is being forwarded to Group Art Unit 2895.

Telephone inquiries regarding this decision should be directed to the undersigned at (571)272-3207.

Cliff Congo
Petitions Attorney
Office of Petitions

Docket No.: F4500.1018/P1018
(PATENT)

**IN THE UNITED STATES PATENT AND TRADEMARK OFFICE**

In re Patent Application of:
John Hartelius

Application No.: 13/011,185 | Confirmation No.: 4170

Filed: January 21, 2011 | Art Unit: Not Yet Assigned

For: PHOTOVOLTAIC MODULE SUPPORT SYSTEM | Examiner: Not Yet Assigned

**PETITION TO MAKE SPECIAL UNDER GREEN TECHNOLOGY PILOT PROGRAM**

MS Petition
Commissioner for Patents
P.O. Box 1450
Alexandria, VA 22313-1450

Dear Sir:

Applicant requests that special status be accorded to this application because the invention materially enhances the quality of the environment of mankind by contributing to the restoration or maintenance of the basic life-sustaining natural elements in that it materially contributes to the development of energy resources.

The present application is directed to, among other things, a photovoltaic module support system that enables more efficient installation and maintenance of PV module arrays, allows longer spans of PV modules between support structures, and provides for more efficient use of real estate. The described support system tracks the sun's diurnal rotation to maximize energy capture by the photovoltaic modules. The truss and cradle structure described in the application allows longer rows of photovoltaic modules to be arranged without requiring gaps between adjacent modules, enabling a larger number of modules to be arranged in a smaller space. The described truss and cradle structure also enables longer spans between support structures, reducing the number of

support structures required for a given area. Embodiments of the support system place linkage components underground, enabling unobstructed passage between array rows and more efficient construction, commissioning, and maintenance.

The benefits of the support structure are not merely speculative – the described support structure provides a more efficient way to capture solar energy. Accordingly, this application materially contributes to the more efficient utilization and conversation of energy resources because it promotes and provides advancements in the field of solar energy, a renewable resource.

Considering the above, the present application is believed to satisfy all the requirements for special status.

No other fees are believed to be due with the filing of this paper, however, the Director is hereby authorized to charge any deficiency in the fees filed, asserted to be filed or which should have been filed herewith (or with any paper hereafter filed in this application by this firm) to our Deposit Account No. 04-1073, under Order No. F4500.1018/P1018.

Dated: March 3, 2011

Respectfully submitted,

By_____

Thomas J. D'Amico
Registration No. 28,371
Jonathan L. Falkler
Registration No.: 62,115
DICKSTEIN SHAPIRO LLP
1825 Eye Street, NW
Washington, DC 2006-5403
(202) 785-9700
Attorneys for Applicant

**Doc Code: PET.GREEN**
**Document Description: Petition for Green Tech Pilot**

PTO/SB/420 (05-10)
Approved for use through 01/31/2011. OMB 0651-0062
U.S. Patent and Trademark Office; U.S. DEPARTMENT OF COMMERCE
Under the Paperwork Reduction Act of 1995, no persons are required to respond to a collection of information unless it displays a valid OMB control number.

# PETITION TO MAKE SPECIAL UNDER THE GREEN TECHNOLOGY PILOT PROGRAM

| Attorney Docket Number: F4500.1018/P1018 | Application Number (if known): 13/011,185 | Filing date: January 21, 2011 |
|---|---|---|
| First Named Inventor: John Hartelius | | |
| Title: PHOTOVOLTAIC MODULE SUPPORT SYSTEM | | |

**APPLICANT HEREBY REQUESTS TO PARTICIPATE IN THE GREEN TECHNOLOGY PILOT PROGRAM FOR THE ABOVE-IDENTIFIED APPLICATION. See Instruction Sheet on page 2.**

This petition must be timely filed electronically using the USPTO electronic filing system, EFS-Web.

1. By filing this petition:

   **Applicant is requesting early publication: Applicant hereby requests early publication under 37 CFR 1.219 and the publication fee set forth in 37 CFR 1.18(d) accompanies this request.**

2. By filing this petition: applicant is agreeing to make an election without traverse in a telephonic interview and elect an invention that meets the eligibility requirements set forth in the notice titled "Pilot Program for Green Technologies Including Greenhouse Gas Reduction," as modified by the notice titled "Elimination of Classification Requirement in the Green Technology Pilot Program," each of which was published in the Federal Register, if the Office determines that the claims are not obviously directed to a single invention.

3. This request is accompanied by statements of special status for the eligibility requirement.

4. The application contains no more than three (3) independent claims and twenty (20) total claims.

5. The application does not contain any multiple dependent claims.

6. Other attachments: First Preliminary Amendment Under 37 C.F.R. 1.115

| Signature | Date: March 3, 2011 |
|---|---|
| Name (Print/Typed): Thomas J. D'Amico | Registration Number: 28,371 |

*Note: Signatures of all the inventors or assignees of record of the entire interest or their representative(s) are required in accordance with 37 CFR 1.33 and 11.18. Please see 37 CFR 1.4(d) for the form of the signature. If necessary, submit multiple forms if more than one signature, see below*.*

☐ *Total of 1 forms are submitted.

UNITED STATES PATENT AND TRADEMARK OFFICE

UNITED STATES DEPARTMENT OF COMMERCE
United States Patent and Trademark Office
Address: COMMISSIONER FOR PATENTS
P.O. Box 1450
Alexandria, Virginia 22313-1450
www.uspto.gov

| APPLICATION NO. | FILING DATE | FIRST NAMED INVENTOR | ATTORNEY DOCKET NO. | CONFIRMATION NO. |
|---|---|---|---|---|
| 13/011,185 | 01/21/2011 | John Hartelius | F4500.1018/P1018 | 4170 |

24998 7590 03/16/2011
DICKSTEIN SHAPIRO LLP
1825 EYE STREET NW
Washington, DC 20006-5403

| EXAMINER | |
|---|---|
| ART UNIT | PAPER NUMBER |
| 1725 | |

| MAIL DATE | DELIVERY MODE |
|---|---|
| 03/16/2011 | PAPER |

**Please find below and/or attached an Office communication concerning this application or proceeding.**

The time period for reply, if any, is set in the attached communication.

UNITED STATES PATENT AND TRADEMARK OFFICE

Commissioner for Patents
United States Patent and Trademark Office
P.O. Box 1450
Alexandria, VA 22313-1450
www.uspto.gov

DICKSTEIN SHAPIRO LLP
1825 EYE STREET NW
Washington DC 20006-5403

3/16/2011

In re Application of :
Hartelius :
Application No. 13/011,185 :
Filed: 1/21/2011 :
Attorney Docket No. **F4500.1018/P1018** :

DECISION ON PETITION
TO MAKE SPECIAL UNDER
THE GREEN TECHNOLOGY
PILOT PROGRAM

This is a decision on the petition under 37 CFR 1.102, filed 3/3/2011, to make the above-identified application special under the pilot program for applications pertaining to Green Technologies as set forth in 74 Federal Register Notice 64666 (December 8, 2009) and amended by 75 Federal Register Notice 28554 (May 21, 2010) and 75 Federal Register Notice 69049 (November 10, 2010).

The petition is **GRANTED**.

A grantable petition to make an application special under 37 CFR 1.102 and the pilot program as set forth in 74 FR 64666 must be directed to a nonprovisional application filed under 35 USC 111(a) or be a national stage entry under 35 USC 371, exclusive of any reissue applications.

In order to qualify for special status, the following requirements must be met. 1) The application must have no more than 3 independent claims and no more than 20 total claims. 2) The application must not contain any multiple dependent claims. 3) The petition must state the basis for seeking special status, i.e., the claimed invention either: A) materially enhances the quality of the environment or B) materially contributes to: i) the discovery or development of renewable energy resources, ii) the more efficient utilization and conservation of energy resources, or iii) greenhouse gas emission reduction. 4) If the disclosure is not clear on its face that the claimed invention materially contributes under category (A) or (B), the petition must be accompanied by a statement by the applicant, assignee, or an attorney/agent registered to practice before the Office explaining how the materiality standard is met. 5) A statement that applicant will agree to make an election without traverse in a telephonic interview if a restriction requirement is made by the examiner. 6) The petition to make special must be filed electronically. 7) The petition must be filed at least one day prior to the date that a first Office Action appears in the Patent Application Information Retrieval (PAIR) system. 8) The petition must be accompanied by a request for early publication in compliance with 37 CFR 1.219 and include the publication fee as set forth in 37 CFR 1.18(d).

The requirement for a fee for consideration of the petition to make special for applications pertaining to Green Technologies has been waived.

The instant petition complies with items 1 – 8 above. Accordingly, the above-identified application has been accorded "special" status.

Telephone inquires concerning this decision should be directed to Tom Dunn at 571-272-1171.

The application is being forwarded to the Technology Center Art Unit 1725 for action on the merits commensurate with this decision.

/Tom Dunn/

Tom Dunn
Quality Assurance Specialist
Technology Center 1700

UNITED STATES PATENT AND TRADEMARK OFFICE

UNITED STATES DEPARTMENT OF COMMERCE
United States Patent and Trademark Office
Address: COMMISSIONER FOR PATENTS
P.O. Box 1450
Alexandria, Virginia 22313-1450
www.uspto.gov

| APPLICATION NO. | FILING DATE | FIRST NAMED INVENTOR | ATTORNEY DOCKET NO. | CONFIRMATION NO. |
|---|---|---|---|---|
| 13/011,236 | 01/21/2011 | Koichi USHIDA | 147612 | 4267 |

7590 04/06/2012

OLIFF & BERRIDGE, PLC
P.O. BOX 320850
ALEXANDRIA, VA 22320-4850

| EXAMINER | |
|---|---|
| WU, XIAO MIN | |

| ART UNIT | PAPER NUMBER |
|---|---|
| 2628 | |

| NOTIFICATION DATE | DELIVERY MODE |
|---|---|
| 04/06/2012 | ELECTRONIC |

## DECISION GRANTING PETITION UNDER 37 CFR 1.138(d)

*The declaration of express abandonment is recognized*

This is in response to the petition under 37 CFR 1.138(d), requesting for a refund of any previously paid search fee and excess claims fee in the above-identified application.

The petition is granted.

The express abandonment is recognized. Any previously paid search fee and excess claims fee are hereby refunded.

Telephone inquiries should be directed to the Office of Data Management at (571) 272-4200.

Patent Publication Branch
Office of Data Management

UNITED STATES PATENT AND TRADEMARK OFFICE

Commissioner for Patents
United States Patent and Trademark Office
P.O. Box 1450
Alexandria, VA 22313-1450
www.uspto.gov

Paper No.

MAILED

APR 11 2011

OFFICE OF PETITIONS

WENDEROTH, LIND & PONACK L.L.P.
1030 15th Street, N.W.
Suite 400 East
Washington DC 20005-1503

In re Application of :
Nonaka et al. :
Application Number: 13/011275 : NOTICE
Filing or 371(c) Date: 01/21/2011 :
Attorney Docket Number: 2011_0082 :

This is a notice regarding your request for acceptance of a fee deficiency submission under 37 CFR 1.28 filed on March 1, 2011.

The Office no longer investigates or rejects original or reissue patents under 37 CFR 1.56. **1098 Off. Gaz. Pat. Office 502 (January 3, 1989)**. Therefore, nothing in this Notice is intended to imply that an investigation was done.

Your fee deficiency submission under 37 CFR 1.28 is hereby **ACCEPTED**.

This application is no longer entitled to small entity status. Accordingly, all future fees paid in this patent must be paid at the large entity rate.

Inquiries related to this communication should be directed to the undersigned at (571) 272-3231.

D Wood

Douglas Wood
Attorney
Office of Petitions

UNITED STATES PATENT AND TRADEMARK OFFICE

UNITED STATES DEPARTMENT OF COMMERCE
United States Patent and Trademark Office
Address: COMMISSIONER FOR PATENTS
P.O. Box 1450
Alexandria, Virginia 22313-1450
www.uspto.gov

| APPLICATION NO. | FILING DATE | FIRST NAMED INVENTOR | ATTORNEY DOCKET NO. | CONFIRMATION NO. |
|---|---|---|---|---|
| 13/011,396 | 01/21/2011 | Christopher M. Hanna | 56233-478<br>(THTK-3DVCON3) | 4567 |

23630 7590 03/04/2011

McDermott Will & Emery
600 13th Street, NW
Washington, DC 20005-3096

| EXAMINER | |
|---|---|
| ART UNIT | PAPER NUMBER |
| 2614 | |

| NOTIFICATION DATE | DELIVERY MODE |
|---|---|
| 03/04/2011 | ELECTRONIC |

**Please find below and/or attached an Office communication concerning this application or proceeding.**

The time period for reply, if any, is set in the attached communication.

Notice of the Office communication was sent electronically on above-indicated "Notification Date" to the following e-mail address(es):

mweipdocket@mwe.com

UNITED STATES PATENT AND TRADEMARK OFFICE

Commissioner for Patents
United States Patent and Trademark Office
P.O. Box 1450
Alexandria, VA 22313-1450
www.uspto.gov

McDermott Will & Emery
600 13th Street, NW
Washington DC 20005-3096

In re Application of:
HANNA, CHRISTOPHER M.
Serial No.: 13/011,396
Filed: January 21, 2011

Title: **BTSC TECHNIQUES**

DECISION ON PETITION TO MAKE SPECIAL FOR NEW APPLICATION UNDER 37 C.F.R. § 1.102 & M.P.E.P. § 708.02

This is a decision on the petition filed on January 21, 2011 and revised on February 7, 2011 to make the above-identified application special for accelerated examination procedure under 37 C.F.R. § 1.102(d).

The petition to make the application special is **DISMISSED**.

REGULATION AND PRACTICE

A grantable petition to make special under 37 C.F.R. § 1.102(d) and pursuant to the "Change to Practice for Petitions in Patent Applications to Make Special and for Accelerated Examination" published in the Federal Register on June 26, 2006 (71 Fed. Reg. 36323), must satisfy the following conditions:

I. Conditions Regarding the Application:

1. the application must be a non-reissue utility or design application filed under 37 CFR 1.111(a);

2. the application, the petition and the required fees must be filed electronically using the USPTO's electronic filing system (EFS), or EFS-web; if not filed electronically, a statement asserting that EFS and EFS-web were not available during the normal business hours.

3. at the time of filing, the application must be complete under 37 CFR 1.51 and in condition for examination;

4. the application must contain three or fewer independent claims and twenty or fewer total claims and the claims must be directed to a single invention.

II. Conditions Regarding the Petition:

The petition must:

1. be filed with the application;

2. include a statement that applicant agrees not to separately argue the patentability of any independent claim during any appeal in the application;

3. include a statement that applicant agrees to make an election without traverse in a telephone interview.

4. include a statement that applicant agrees to conduct such an interview when requested by the examiner.

5. include a statement, made based on a good faith belief, that a preexamination search in compliance with the following requirements, was conducted, including an identification of the filed of search by United States class and subclass, where applicable, and for database searches, the search logic or chemical structure or sequence used as a query, the name of the file(s) searched and the database service, and the date of the search.

The preexamination search must:

5.1 involve U.S. patents and patent application publications, foreign patent documents, and non-patent literature, unless the applicant can justify with reasonable certainty that no references more pertinent than those already identified are likely to be found in the eliminated sources and includes such a justification with this statement;

5.2. be directed to the claimed invention and encompass all of the features of the claims, giving the claims the broadest reasonable interpretation;

5.3. encompass the disclosed features that may be claimed.

6. must provide in support of the petition an accelerated examination support document. An accelerated examination support document must include:

6.1. an information disclosure statement (IDS) in compliance with 37 CFR 1.98 citing each reference deemed most closely related to the subject matter of each of the claims;

6.2. an identification of all the limitations in the claims that are disclosed by the reference specifying where the limitation is disclosed in the cited reference;

6.3. a detailed explanation of how each of the claims are patentable over the references cited with particularity required by 37 CFR 1.111(b) and (c);

6.4. a concise statement of the utility of the invention as defined in each of the independent claims (unless the application is a design application);

6.5. a showing of where each limitation of the claims finds support under 35 USC 112, first paragraph, in the written description of the specification. If applicable, the showing must also identify: (1) each means- (or step) plus-function claim element that invokes consideration under 35 USC 112, sixth paragraph; and (2) the structure, material, or acts in the specification that corresponds to each means- (or step) plus-function claim element that invokes consideration under 35 USC 112, sixth paragraph; if the application claims the benefit of one or more applications under title 35, United States Code, the showing must also include where each limitation of the claims finds support under 35 USC 112, first paragraph, in each such application in which such supports exists;

6.6. an identification of any cited references that may be disqualified under 35 USC 103(c).

## REVIEW OF FACTS

The conditions set forth under section I. above are considered to have been met. However, the petition fails to comply with conditions set forth under section II. Items 5.2 and 5.3.

Regarding the requirement in item 5.2 and 5.3 above, the preexamination search document provided with the instant petition is deficient as follows: The US field of search and database searches which are to be provided under section 8(A) are not sufficient. In addition to the search areas provided, applicant would also need to search in the following class/ subclasses: 381/106 and 107.
If any request for reconsideration is filed, an updated preexamination search must be conducted as per items 5.2 and 5.3 above, and the Preexamination Search Document must be amended to indicate such; a new Information Disclosure Statement should be filed to cite any newly found prior art, and the Accelerated Examination Support Document must also be amended to include the necessary reference and discussion of any newly found and cited prior art in accordance with all of items 6 through 6.6 above; as well as the necessary updated discussion of patentability for each of the dependent claims (or a statement that claims stand or fall together) as set forth above.

## DECISION

For the above-stated reasons, the petition is **dismissed**. The application will therefore be taken up by the examiner for action in its regular turn.

Petitioner is given a single opportunity to perfect the petition. Any request for reconsideration of this decision must be submitted within 1 (one) month or 30 (thirty) days, whichever is longer, (no extension of time under 37 CFR 1.136(a)) from the date of this decision in order to be considered timely. Any request for reconsideration must address the deficiencies indicated above.

Petitioner is reminded that, upon granting of the special status of the application on request for reconsideration, the application will be processed expeditiously. However, due to the dismissal of the instant petition, examination may not be completed within twelve months of the filing date of the application.

Any inquiry regarding this decision should be directed to Daniel Swerdlow, Quality Assurance Specialist, at (571) 272-7531.

/ Daniel Swerdlow /

Daniel Swerdlow
Quality Assurance Specialist
Technology Center 2600
Communications

UNITED STATES PATENT AND TRADEMARK OFFICE

UNITED STATES DEPARTMENT OF COMMERCE
United States Patent and Trademark Office
Address: COMMISSIONER FOR PATENTS
P.O. Box 1450
Alexandria, Virginia 22313-1450
www.uspto.gov

| APPLICATION NO. | FILING DATE | FIRST NAMED INVENTOR | ATTORNEY DOCKET NO. | CONFIRMATION NO. |
|---|---|---|---|---|
| 13/011,396 | 01/21/2011 | Christopher M. Hanna | 56233-478 (THTK-3DVCON3) | 4567 |

23630 7590 04/11/2011

McDermott Will & Emery
600 13th Street, NW
Washington, DC 20005-3096

| EXAMINER | |
|---|---|
| ART UNIT | PAPER NUMBER |
| 2614 | |

| NOTIFICATION DATE | DELIVERY MODE |
|---|---|
| 04/11/2011 | ELECTRONIC |

**Please find below and/or attached an Office communication concerning this application or proceeding.**

The time period for reply, if any, is set in the attached communication.

Notice of the Office communication was sent electronically on above-indicated "Notification Date" to the following e-mail address(es):

mweipdocket@mwe.com

UNITED STATES PATENT AND TRADEMARK OFFICE

Commissioner for Patents
United States Patent and Trademark Office
P.O. Box 1450
Alexandria, VA 22313-1450
www.uspto.gov

McDermott Will & Emery
600 13th Street, NW
Washington DC 20005-3096

In re Application of: **HANNA, CHRISTOPHER M.**
Serial No.: **13/011,396**
Filed: **January 21, 2011**

Title: **BTSC TECHNIQUES**

DECISION ON PETITION TO MAKE SPECIAL FOR NEW APPLICATION UNDER 37 C.F.R. § 1.102 & M.P.E.P. § 708.02

This is a decision on the petition filed on March 4, 2011 and the subsequent request for reconsideration with replacement documents, filed March 31, 2011 requesting to make the above-identified application special for accelerated examination procedure under 37 C.F.R. § 1.102(d).

The petition to make the application special is **GRANTED**.

The application is eligible for accelerated examination and the petition complies with the conditions for granting the application special status pursuant to the "Change to Practice for Petitions in Patent Applications to Make Special and for Accelerated Examination" published June 26, 2006, in the Federal Register. (71 Fed. Reg. 36323).

The prosecution of the instant application will be conducted expeditiously according to the following guidelines.

1. The application will be docketed to an examiner and taken up for action within two weeks of the date of this decision.

2. Restriction Practice:
   If the examiner determines that the claims are not directed to a single invention, a telephone request to elect one single invention will be made pursuant to MPEP 812.01. As a prerequisite to the grant of this petition, the applicant has agreed to make an oral election, by telephone, without traverse. If the applicant refuses to make an election without traverse, or the examiner cannot reach the applicant after a reasonable effort, the examiner will treat the first claimed invention (invention defined by claim 1) as having being constructively elected without traverse for examination.

3. Office action:
   If it is determined that, after appropriate consultation, there is a potential rejection or any other issue to be addressed, the examiner will telephone the applicant and arrange an

interview to discuss and resolve the issue. An Office action, other than a Notice of Allowance and Fee(s) Due (Notice of Allowance), will not be issued unless either: 1) an interview was conducted but did not result in agreed to action that places the application in condition for allowance, or, 2) a determination is made that an interview would be unlikely to result in the application being placed in condition for allowance, and 3) an internal conference has been held to review any rejection of any claim.

4. Time for Reply:
An Office action other than a Notice of Allowance or a final Office action will set a shortened statutory period of one month or thirty days, whichever is longer, for reply with no extension of time available under 37 CFR 1.136(a). Failure to timely file a reply within this non-extendible period for reply will result in the abandonment of the application.

5. Reply by Applicant:
A timely reply to an Office action other than the Notice of Allowance must be submitted electronically via EFS or EFS-web and limited to addressing the rejections, objections and requirement made. Any amendment that attempts to: 1) add claims which would result in more than three pending independent claims or more than twenty pending total claims; 2) present claims not encompassed by the pre-examination search or an updated accelerated examination support document; or 3) present claims that are directed a non-elected invention or an invention other than that previously claimed and examined in the application, will be treated as not fully responsive and will not be entered.

For any amendment to the claims (including any new claim) that is not encompassed by the accelerated examination support document, applicant must provide an updated accelerated examination support document that encompasses the amended or new claims at the time of filing of the amendment.

To proceed expeditiously with the examination, it is recommended that a reply with amendments made to any claim or with any new claim being added be accompanied by an updated accelerated examination support document or a statement explaining how the amended or new claim is supported by the original accelerated examination support document.

6. Information Disclosure Statement (IDS):
Any IDS filed during prosecution must be submitted electronically via EFS or EFS-web, accompanied by an updated accelerated examination support document, and be in compliance with 37 CFR 1.97 and 1.98.

7. Post-Allowance Processing:
To expedite processing of the allowed application into a patent, the applicant must: 1) pay the required fees within one month of the date of the Notice of Allowance, and 2) not file any post allowance papers not required by the Office. In no event may the issue fee be paid and accepted later than three months from the date of the Notice of Allowance.

8. After-Final and Appeal Procedures:
   To expedite prosecution, after receiving the final Office action, applicant must: 1) promptly file a notice of appeal, an appeal brief and appeal fees; and 2) not request a pre-appeal brief conference.

   Any amendment, affidavit or other evidence filed after final Office action must comply with applicable rules and the requirements outlined in numbered paragraphs 5 and 6 above.

   On appeal, the application will proceed according to normal appeal procedures. After appeal, the application will again be treated special.

9. Proceedings Outside the Normal Examination Process:
   If the application becomes involved in a proceeding that is outside the normal examination process (e.g., a secrecy order, national security review, interference proceeding, petitions under 37 CFR 1.181, 182 or 183), the application will be treated special before and after such proceeding.

10. Final Disposition:
    The twelve month goal of this accelerated examination procedure ends with a final disposition. The mailing of a final Office action, a Notice of Allowance, the filing of a Notice of Appeal, or the filing of a Request for Continued Examination (RCE) is the final disposition.

If, during prosecution, a paper is not filed electronically using EFS-web, a reply is filed but is not fully responsive, the application is involved in an appeal, or a proceeding outside normal examination process, the application will still be examined expeditiously, however, the final disposition may occur more than twelve months from the filing of the application.

Any inquiry regarding this decision should be directed to Daniel Swerdlow, Quality Assurance Specialist, at (571) 272-7531.

/Daniel Swerdlow/

Daniel Swerdlow
Quality Assurance Specialist
Technology Center 2600
Communications

Doc Code: PPH.PCT.652
Document Description: Petition to make special under PCT-Patent Pros Hwy

PTO/SB/20PCT-KR (06-10)
Approved for use through 01/31/2012. OMB 0651-0058
U.S. Patent and Trademark Office; U. S. DEPARTMENT OF COMMERCE
Under the Paperwork Reduction Act of 1995, no persons are required to respond to a collection of information unless it displays a valid OMB control number.

# REQUEST FOR PARTICIPATION IN THE PATENT COOPERATION TREATY - PATENT PROSECUTION HIGHWAY (PCT-PPH) PILOT PROGRAM BETWEEN THE KOREAN INTELLECTUAL PROPERTY OFFICE (KIPO) AND THE USPTO

| | | | |
|---|---|---|---|
| Application No: | 13011406 | Filing date: | 01/21/2011 |
| First Named Inventor: | Hirst, Paul | | |
| Title of the Invention: | IMAGING PROCESS FOR FLOWING MATERIAL | | |

**THIS REQUEST FOR PARTICIPATION IN THE PCT-PPH PILOT PROGRAM ALONG WITH THE REQUIRED DOCUMENTS MUST BE SUBMITTED VIA EFS-WEB. INFORMATION REGARDING EFS-WEB IS AVAILABLE AT HTTP://WWW.USPTO.GOV/EBC/EFS_HELP.HTML**

**APPLICANT HEREBY REQUESTS PARTICIPATION IN THE PCT-PPH PROGRAM AND PETITIONS TO MAKE THE ABOVE-IDENTIFIED APPLICATION SPECIAL UNDER THE PCT-PPH PROGRAM.**

The above-identified application is (1) a national stage entry of the corresponding PCT application, or (2) a national stage entry of another PCT application which claims priority to the corresponding PCT application, or (3) a national application that claims domestic/ foreign priority to the corresponding PCT application, or (4) a national application which forms the basis for the priority claim in the corresponding PCT application, or (5) a continuing application of a U.S. application that satisfies one of (1) to (4) above, or (6) a U.S. application that claims domestic benefit to a U.S. provisional application which forms the basis for the priority claim in the corresponding PCT application.

**The corresponding PCT application number(s) is/are:** PCT/US2011/022076

**The international date of the corresponding PCT application(s) is/are:** 27 OCTOBER 2011

**I. List of Required Documents:**

a. **A copy of the latest international work product (WO/ISA, WO/IPEA, or IPER) in the above-identified corresponding PCT application(s)**

☒ Is attached.

☐ Is not attached because the document is already in the U.S. application.

b. **A copy of all claims which were indicated as having novelty, inventive step and industrial applicability in the above-identified corresponding PCT application(s).**

☐ Is attached.

☒ Is not attached because the document is already in the U.S. application.

c. **English translations of the documents in a. and b. above are attached (if the documents are not in the English language). A statement that the English translation is accurate is attached for the document in b. above.**



This collection of information is required by 35 U.S.C. 119, 37 CFR 1.55, and 37 CFR 1.102(d). The information is required to obtain or retain a benefit by the public, which is to file (and by the USPTO to process) an application. Confidentiality is governed by 35 U.S.C. 122 and 37 CFR 1.11 and 1.14. This collection is estimated to take 2 hours to complete, including gathering, preparing, and submitting the completed application form to the USPTO. Time will vary depending upon the individual case. Any comments on the amount of time you require to complete this form and/or suggestions for reducing this burden should be sent to the Chief Information Officer, U.S. Patent and Trademark Office, U.S. Department of Commerce, P.O. Box 1450, Alexandria, VA 22313-1450. DO NOT SEND FEES OR COMPLETED FORMS TO THIS ADDRESS.

PTO/SB/20PCT-KR (06-10)
Approved for use through 01/31/2012. OMB 0651-0058
U.S.Patent and Trademark Office; U.S. DEPARTMENT OF COMMERCE
Under the Paperwork Reduction Act of 1995, no persons are required to respond to a collection of information unless it displays a valid OMB control number.

# REQUEST FOR PARTICIPATION IN THE PCT-PPH PILOT PROGRAM BETWEEN THE KIPO AND THE USPTO

(continued)

| | |
|---|---|
| Application No.: | 13011406 |
| First Named Inventor: | HIRST, PAUL |

d. **(1) An information disclosure statement listing the documents cited in the international work products (ISR, WO/ISA, WO/IPEA, IPER) of the corresponding PCT application.**

☒ Is attached

☐ Has already been filed in the above-identified U.S. application on _____

**(2) Copies of all documents (except) for U.S. patents or U.S. patent application publications)**

☒ Are attached.

Have already been filed in the above-identified U.S. application on _____

**II. Claims Correspondence Table:**

| Claims in US Application | Patentable Claims in the corresponding PCT Application | Explanation regarding the correspondence |
|---|---|---|
| 1 | 1 | They are identical |
| 2-3 | 2-3 | Identical, excepting that the PCT claims are expressed in |
| | | multiple depend form and the U.S. claims are not so expressed |
| 4-16 | | Dependent claims from claim 1 that were not examined |
| | | |
| | | |
| | | |
| | | |
| | | |
| | | |
| | | |
| | | |
| | | |
| | | |
| | | |
| | | |
| | | |
| | | |
| | | |

**III. All the claims in the US application sufficiently correspond to the patentable claims in the corresponding PCT application.**

| | |
|---|---|
| Signature /B. CRAIG KILLOUGH/ | Date 11/14/2011 |
| Name (Print/Typed) B. CRAIG KILLOUGH | Registration Number 30398 |

UNITED STATES PATENT AND TRADEMARK OFFICE

UNITED STATES DEPARTMENT OF COMMERCE
United States Patent and Trademark Office
Address: COMMISSIONER FOR PATENTS
P.O. Box 1450
Alexandria, Virginia 22313-1450
www.uspto.gov

| APPLICATION NO. | FILING DATE | FIRST NAMED INVENTOR | ATTORNEY DOCKET NO. | CONFIRMATION NO. |
|---|---|---|---|---|
| 13/011,410 | 01/21/2011 | Thomas Hjort | VWS-254US | 4602 |

83583 7590 05/25/2011

Wood, Herron & Evans, LLP (Vestas Wind Systems)
441 Vine Street
2700 Carew Tower
Cincinnati, OH 45202

| EXAMINER | |
|---|---|
| ART UNIT | PAPER NUMBER |
| 2877 | |

| NOTIFICATION DATE | DELIVERY MODE |
|---|---|
| 05/25/2011 | ELECTRONIC |

**Please find below and/or attached an Office communication concerning this application or proceeding.**

The time period for reply, if any, is set in the attached communication.

Notice of the Office communication was sent electronically on above-indicated "Notification Date" to the following e-mail address(es):

amalik@whepatent.com
eobrien@whepatent.com
USPTODOCK@whepatent.com

UNITED STATES PATENT AND TRADEMARK OFFICE

Commissioner for Patents
United States Patent and Trademark Office
P.O. Box 1450
Alexandria, VA 22313-1450
www.uspto.gov

**Wood, Herron & Evans, LLP (Vestas Wind Systems)**
**441 Vine Street**
**2700 Carew Tower**
**Cincinnati OH 45202**

**In re Application of**
**HJORT et al.**
**Application No.: 13/011,410**
**Filed: 21 January 2011**
**Attorney Docket No.: VWS-254US**
**For: OPTICAL SENSOR SYSTEM AND DETECTING METHOD FOR AN ENCLOSED SEMICONDUCTOR DEVICE MODULE**

**: DECISION ON REQUEST TO**
**: PARTICIPATE IN THE PATENT**
**: PROSECUTION HIGHWAY**
**: PROGRAM AND PETITION**
**: TO MAKE SPECIAL UNDER**
**: 37 CFR 1.102(d)**

This is a decision on the request to participate in the Patent Prosecution Highway (PPH) program filed 04 April 2011.

The request and petition are **GRANTED**.

A grantable request to participate in the PPH program and petition to make special require:

(1) The U.S. application must validly claim priority under 35 U.S.C. 119(a) to one or more applications filed in the UK IPO, note where the UK IPO application with similar claims is not the same application from which the U.S. application claims priority that the applicant must identify the relationship between the UK IPO application with similar claims and the UK IPO priority application;

(2) Applicant must submit a copy of:
The allowable/patentable claim(s) from the UK IPO application(s);

(3) Applicant must:
a. Ensure all the claims in the U.S. application must sufficiently correspond or be amended to sufficiently correspond to the allowable/patentable claim(s) in the UK IPO application(s); and
b. Submit a claims correspondence table;

(4) Examination of the U.S. application hås not begun;

(5) The required petition fee under 37 CFR 1.17(h).

(6) Applicant must submit:
A copy of all of the office actions from each of the UK IPO application(s) containing the allowable/patentable claims that are the basis for the request or request that the USPTO

obtain a copy from the UK IPO. If the USPTO is not able to obtain a copy of all of the office actions from the UK IPO, the applicant will be notified and requested to provide the necessary documents.

(7) Applicant must submit:

a. An IDS listing the documents cited by the UK IPO examiner in the UK IPO office action (unless already submitted in this application); and
b. Copies of documents except U.S. patents or U.S. patent application publications (unless already submitted in this application)

The request to participate in the PPH program and petition comply with the above requirements. Accordingly, the above-identified application has been accorded "special" status.

This application will be forwarded to the examiner for action on the merits commensurate with this decision once the formalities review has been completed.

Any inquiry regarding this decision should be directed to Lee W. Young, Quality Assurance Specialist, at (571) 272-4549.

All other inquiries concerning the examination or status of the application is accessible in the PAIR system at http://www.uspto.gov/ebc/index.html.

Lee W. Young
TQAS
Technology Center 2800 – Semiconductors
Electrical & Optical Systems & Components

UNITED STATES PATENT AND TRADEMARK OFFICE

UNITED STATES DEPARTMENT OF COMMERCE
United States Patent and Trademark Office
Address: COMMISSIONER FOR PATENTS
P.O. Box 1450
Alexandria, Virginia 22313-1450
www.uspto.gov

| APPLICATION NO. | FILING DATE | FIRST NAMED INVENTOR | ATTORNEY DOCKET NO. | CONFIRMATION NO. |
|---|---|---|---|---|
| 13/011,479 | 01/21/2011 | Hwan Hee JEONG | HI-0602 | 4733 |

34610 7590 03/01/2011

KED & ASSOCIATES, LLP
P.O. Box 8638
Reston, VA 20195

| EXAMINER | |
|---|---|
| ART UNIT | PAPER NUMBER |
| 2811 | |

| MAIL DATE | DELIVERY MODE |
|---|---|
| 03/01/2011 | PAPER |

**Please find below and/or attached an Office communication concerning this application or proceeding.**

The time period for reply, if any, is set in the attached communication.

UNITED STATES PATENT AND TRADEMARK OFFICE

Commissioner for Patents
United States Patent and Trademark Office
P.O. Box 1450
Alexandria, VA 22313-1450
www.uspto.gov

**KED & ASSOCIATES, LLP**
**P.O. Box 8638**
**Reston VA 20195**

**In re Application of**
**JEONG et al**
**Application No.: 13/011,479**
**Filed: 21 January 2011**
**Attorney Docket No.: HI-0602**
**For: LIGHT EMITTING DEVICE AND LIGHT EMITTING DEVICE PACKAGE HAVING THE SAME**

**: DECISION ON REQUEST TO**
**: PARTICIPATE IN THE PATENT**
**: PROSECUTION HIGHWAY**
**: PROGRAM AND PETITION**
**: TO MAKE SPECIAL UNDER**
**: 37 CFR 1.102(a)**

This is a decision on the request to participate in the Patent Prosecution Highway (PPH) program and the petition under 37 CFR 1.102(a), filed 21 January 2011, to make the above-identified application special.

The request and petition are **GRANTED**.

**Discussion**

A grantable request to participate in the PPH program and petition to make special require:

1. The U.S. application is

   a. a Paris Convention application which either
      i. validly claims priority under 35 U.S.C. 119(a) and 37 CFR 1.55 to one or more applications filed in the KIPO, or
      ii. validly claims priority under 35 U.S.C. 119(a)/365(a) to a PCT application that contains no priority claims,

   or

   b. a national stage application under the PCT (an application which entered the national stage in the U.S. from a PCT international application after compliance with 35 U.S.C. 371), which PCT application
      i. validly claims priority under 35 U.S.C. 365(b) to an application filed in the KIPO, or
      ii. validly claims priority under 35 U.S.C. 365(b) to a PCT application that contains no priority claims, or
      iii. contains no priority claim,

   or

   c. a so-called bypass application filed under 35 U.S.C. 111(a) which validly claims benefit under 35 U.S.C. 120 to a PCT application, which PCT application

i. validly claims priority under 35 U.S.C. 365(b) to an application filed in the KIPO, or
ii. validly claims priority under 35 U.S.C. 365(b) to a PCT application that contains no priority claims, or
iii. contains no priority claim;

2. Applicant must submit a copy of:
   a. The allowable/patentable claim(s) from the KR application(s);
   b. An English translation of the allowable/patentable claim(s), and
   c. A statement that the English translation is accurate (if the claims were published in a language other than English);
3. Applicant must:
   a. Ensure that all the claims in the U.S. application must sufficiently correspond or be amended to sufficiently correspond to the allowable/patentable claim(s) in the KR application(s), and
   b. Submit a claims correspondence table in English;
4. Examination of the U.S. application has not begun;
5. Applicant must submit:
   a. A copy of all the office actions (which are relevant to patentability), excluding "Decision to Grant a Patent" from each of the KR application(s) containing the allowable/patentable claim(s);
   b. An English language translation of the KIPO office action; and
   c. A statement that the English translation is accurate (if the office actions are not in the English language);
6. Applicant must submit:
   a. An IDS listing the documents cited by the KIPO examiner in the KIPO office action (unless already filed in this application); and
   b. Copies of all the documents cited in the KIPO office action, except U.S. patents or U.S. patent application publications (unless already filed in this application);

The request to participate in the PPH program and petition comply with the above requirements. Accordingly, the above-identified application has been accorded "special" status.

Any response must be submitted via EFS-Web.

Telephone inquiries concerning this decision should be directed to Lee W. Young at 571-272-4549.

All other inquiries concerning the examination or status of the application is accessible in the PAIR system at http://uspto.gov/ebc/index.html.

Lee W. Young
TQAS
Technology Center 2800

| Doc Code: PET.AUTO<br>Document Description: Petition automatically granted by EFS-Web | PTO/SB/140<br>U.S. Patent and Trademark Office<br>Department of Commerce |
|---|---|

| | |
|---|---|
| Electronic Petition Request | **PETITION TO WITHDRAW AN APPLICATION FROM ISSUE AFTER PAYMENT OF THE ISSUE FEE UNDER 37 CFR 1.313(c)** |
| Application Number | 13011527 |
| Filing Date | 21-Jan-2011 |
| First Named Inventor | Hideto FURUKAWA |
| Art Unit | 2618 |
| Examiner Name | KEITH FERGUSON |
| Attorney Docket Number | 5262-008-DIV4DIV2 |
| Title | RADIO CHANNEL CONTROL METHOD AND RECEIVING APPARATUS |

An application may be withdrawn from issue for further action upon petition by the applicant. To request that the Office withdraw an application from issue, applicant must file a petition under this section including the fee set forth in § 1.17(h) and a showing of good and sufficient reasons why withdrawal of the application from issue is necessary.

APPLICANT HEREBY PETITIONS TO WITHDRAW THIS APPLICATION FROM ISSUE UNDER 37 CFR 1.313(c).

A grantable petition requires the following items:
(1) Petition fee; and
(2) One of the following reasons:
(a) Unpatentability of one or more claims, which must be accompanied by an unequivocal statement that one or more claims are unpatentable, an amendment to such claim or claims, and an explanation as to how the amendment causes such claim or claims to be patentable;
(b) Consideration of a request for continued examination in compliance with § 1.114 (for a utility or plant application only); or
(c) Express abandonment of the application. Such express abandonment may be in favor of a continuing application, but not a CPA under 37 CFR 1.53(d).

Petition Fee

☐ Applicant claims SMALL ENTITY status. See 37 CFR 1.27.

☐ Applicant is no longer claiming SMALL ENTITY status. See 37 CFR 1.27(g)(2).

☐ Applicant(s) status remains as SMALL ENTITY.

☒ Applicant(s) status remains as other than SMALL ENTITY

Reason for withdrawal from issue

| |
|---|
| ◯ One or more claims are unpatentable<br><br>◉ Consideration of a request for continued examination (RCE) (List of Required Documents and Fees)<br><br>◯ Applicant hereby expressly abandons the instant application (any attorney/agent signing for this reason must have power of attorney pursuant to 37 CFR 1.32(b)). |
| RCE request,submission, and fee.<br><br>☐ I certify, in accordance with 37 CFR 1.4(d)(4) that :<br>The RCE request ,submission, and fee have already been filed in the above-identified application on<br><br>☒ Are attached. |
| THIS PORTION MUST BE COMPLETED BY THE SIGNATORY OR SIGNATORIES<br><br>I certify, in accordance with 37 CFR 1.4(d)(4) that I am:<br><br>◉ An attorney or agent registered to practice before the Patent and Trademark Office who has been given power of attorney in this application.<br><br>◯ An attorney or agent registered to practice before the Patent and Trademark Office, acting in a representative capacity.<br><br>◯ A sole inventor<br><br>◯ A joint inventor; I certify that I am authorized to sign this submission on behalf of all of the inventors<br><br>◯ A joint inventor; all of whom are signing this e-petition<br><br>◯ The assignee of record of the entire interest that has properly made itself of record pursuant to 37 CFR 3.71 |

| | |
|---|---|
| Signature | /Michael A Schwartz/ |
| Name | Michael A. Schwartz |
| Registration Number | 40161 |

UNITED STATES PATENT AND TRADEMARK OFFICE

Commissioner for Patents
United States Patent and Trademark Office
P.O. Box 1450
Alexandria, VA 22313-1450
www.uspto.gov

Decision Date : July 13,2011

In re Application of :

Hideto FURUKAWA

DECISION ON PETITION
UNDER CFR 1.313(c)(2)

Application No : 13011527

Filed : 21-Jan-2011

Attorney Docket No : 5262-008-DIV4DIV2

This is an electronic decision on the petition under 37 CFR 1.313(c)(2), filed July 13,2011 , to withdraw the above-identified application from issue after payment of the issue fee.

The petition is **GRANTED.**

The above-identified application is withdrawn from issue for consideration of a submission under 37 CFR 1.114 (request for continued examination). See 37 CFR 1.313(c)(2).

**Petitioner is advised that the issue fee paid in this application cannot be refunded. If, however, this application is again allowed, petitioner may request that it be applied towards the issue fee required by the new Notice of Allowance.**

Telephone inquiries concerning this decision should be directed to the Patent Electronic Business Center (EBC) at 866-217-9197.

This application file is being referred to Technology Center AU 2618 for processing of the request for continuing examination under 37 CFR 1.114 .

Office of Petitions

UNITED STATES PATENT AND TRADEMARK OFFICE

Commissioner for Patents
United States Patent and Trademark Office
P.O. Box 1450

MAILED

JUN 08 2011

OFFICE OF PETITIONS

**VEDDER PRICE P.C.**
**222 N. LASALLE STREET**
**CHICAGO IL 60601**

| | | |
|---|---|---|
| In re Application of | : | |
| James Alan ROBINETTE et al. | : | ON PETITION |
| Application No. 13/011,620 | : | |
| Filed: January 21, 2011 | : | |
| Atty. Docket No.: 42940.00.0002 | : | |

This is in response to the petition under 37 CFR 1.47(a), filed April 5, 2011.

The petition is **GRANTED**.

A grantable petition under 37 CFR 1.47(a) requires:

> (1) proof that the non-signing inventor cannot be reached or refuses to sign the oath or declaration after having been presented with the application papers (specification, claims, and drawings);
> (2) an acceptable oath or declaration in compliance with 35 U.S.C. §§ 115 and 116;
> (3) the petition fee; and
> (4) a statement of the last known address of the non-signing inventor.

Petitioner has shown that the non-signing inventor James W. Abel cannot be found after diligent effort. The application and papers have been received and found in compliance with 37 CFR 1.47(a). This application is hereby accorded Rule 47 status.

As provided in 37 CFR 1.47(c), this Office will forward notice of this application's filing to the non-signing inventor at the address given in that petition. Notice of the filing of this application will be published in the Official Gazette.

Telephone inquires relating to this decision should be directed to Robert DeWitty, Petitions Attorney, Office of Petitions (571-272-8427).

The application file will be referred to Office of Patent Application Processing for further action on the filed Response.

for David Bucci
Petitions Examiner
Office of Petitions

UNITED STATES PATENT AND TRADEMARK OFFICE

Commissioner for Patents
United States Patent and Trademark Office
P.O. Box 1450
Alexandria, VA 22313-1450
www.uspto.gov

MAILED

JUN 08 2011

OFFICE OF PETITIONS

James W. Abel
622 West Poplar Avenue
Suite 5
Collierville, Tennessee 38017

In re Application of
James Alan Robinette and James W. Abel
Application No. 13/011,620
Filed: January 21, 2011
For: ASSEMBLY FOR FORMING A BAG WITH PINCH-BOTTOM SEAL

Dear Mr. Abel:

You are named as the inventor in the above-identified United States patent application, filed under the provisions of 35 U.S.C. 116 (United States Code), and 37 CFR 1.47(b), Rules of Practice in Patent Cases. Should a patent be granted on the application you will be designated therein as the inventor.

As a named inventor you are entitled to inspect any paper in the file wrapper of the application, order copies of all or any part thereof (at a prepaid cost per 37 CFR 1.19) or make your position of record in the application. Alternatively, you may arrange to do any of the preceding through a registered patent attorney or agent presenting written authorization from you. If you care to join the application, counsel of record (see below) would presumably assist you. Joining the application would entail the filing of an appropriate oath or declaration by you pursuant to 37 CFR 1.63.

Telephone inquiries regarding this communication should be directed to Robert DeWitty at 001-(571) 272-8427. Requests for information regarding your application should be directed to the File Information Unit at 001-(703) 308-2733. Information regarding how to pay for and order a copy of the application, or a specific paper in the application, should be directed to the Certification Division at 001-(571) 272-3150.

for Ramesh Krishnamurthy

David Bucci
Petitions Examiner
Office of Petitions

cc: **VEDDER PRICE P.C.**
**222 N. LASALLE STREET**
**CHICAGO IL 60601**

UNITED STATES PATENT AND TRADEMARK OFFICE

UNITED STATES DEPARTMENT OF COMMERCE
United States Patent and Trademark Office
Address: COMMISSIONER FOR PATENTS
P.O. Box 1450
Alexandria, Virginia 22313-1450
www.uspto.gov

| APPLICATION NO. | FILING DATE | FIRST NAMED INVENTOR | ATTORNEY DOCKET NO. | CONFIRMATION NO. |
|---|---|---|---|---|
| 13/011,655 | 01/21/2011 | Thomas Zuber | 1188-1020 | 5103 |

73276 7590 02/18/2011

ZUBER & TAILLIEU LLP
777 SOUTH FIGUEROA ST., 37th FLOOR
LOS ANGELES, CA 90017

| EXAMINER | |
|---|---|
| ART UNIT | PAPER NUMBER |
| 2174 | |

| NOTIFICATION DATE | DELIVERY MODE |
|---|---|
| 02/18/2011 | ELECTRONIC |

**Please find below and/or attached an Office communication concerning this application or proceeding.**

The time period for reply, if any, is set in the attached communication.

Notice of the Office communication was sent electronically on above-indicated "Notification Date" to the following e-mail address(es):

patentgroup@ztllp.com

UNITED STATES PATENT AND TRADEMARK OFFICE

Commissioner for Patents
United States Patent and Trademark Office
P.O. Box 1450
Alexandria, VA 22313-1450
www.uspto.gov

ZUBER & TAILLIEU LLP
777 SOUTH FIGUEROA ST., 37th FLOOR
LOS ANGELES CA 90017

In re Application of:
ZUBER, Thomas
Serial No.: 13/011,655
Filed: January 21, 2011
Docket: **1188-1020**
Title:
**METHOD FOR TAGGING DOCUMENTS AND COMMUNICATIONS WITH FILING AND BILLING INFORMATION**

DECISION ON PETITION TO MAKE SPECIAL FOR NEW APPLICATION UNDER 37 C.F.R. § 1.102 & M.P.E.P. § 708.02

This is a decision on the petition filed on January 21, 2011 to make the above-identified application special for accelerated examination procedure under 37 C.F.R. §1.102(d).

The petition to make the application special is **DISMISSED**.

## REGULATION AND PRACTICE

A grantable petition to make special under 37 C.F.R. §1.102(d) and pursuant to the "Change to Practice for Petitions in Patent Applications to Make Special and for Accelerated Examination" published in the Federal Register on June 26, 2006 (71 Fed. Reg. 36323), must satisfy the following conditions:

I. Conditions Regarding the Application:

1. the application must be a non-reissue utility or design application filed under 37 CFR 1.111(a);

2. the application, the petition and the required fees must be filed electronically using the USPTO's electronic filing system (EFS), or EFS-web; if not filed electronically, a statement asserting that EFS and EFS-web were not available during the normal business hours.

3. at the time of filing, the application must be complete under 37 CFR 1.51 and in condition for examination;

4. The application must contain three or fewer independent claims and twenty or fewer total claims and the claims must be directed to a single invention.

II. Conditions Regarding the Petition:

The petition must:

1. be filed with the application;

2. include a statement that applicant agrees not to separately argue the patentability of any independent claim during any appeal in the application;

3. include a statement that applicant agrees to make an election without traverse in a telephone interview.

4. include a statement that applicant agrees to conduct such an interview when requested by the examiner.

5. include a statement, made based on a good faith belief, that a preexamination search in compliance with the following requirements, was conducted, including an identification of the filed of search by United States class and subclass, where applicable, and for database searches, the search logic or chemical structure or sequence used as a query, the name of the file(s) searched and the database service, and the date of the search.

The preexamination search must:

5.1 involve U.S. patents and patent application publications, foreign patent documents, and non-patent literature, unless the applicant can justify with reasonable certainty that no references more pertinent than those already identified are likely to be found in the eliminated sources and includes such a justification with this statement;

5.2. be directed to the claimed invention and encompass all of the features of the claims, giving the claims the broadest reasonable expectation;

5.3. encompass the disclosed features that may be claimed.

6. must provide in support of the petition an accelerated examination support document. An accelerated examination support document must include:

6.1. an information disclosure statement (IDS) in compliance with 37 CFR 1.98 citing each reference deemed most closely related to the subject matter of each of the claims;

6.2. an identification of all the limitations in the claims that are disclosed by the reference specifying where the limitation is disclosed in the cited reference;

6.3. a detailed explanation of how each of the claims are patentable over the references cited with particularity required by 37 CFR 1.111(b) and (c);

6.4. a concise statement of the utility of the invention as defined in each of the independent claims (unless the application is a design application);

6.5. a showing of where each limitation of the claims finds support under 35 USC 112, first paragraph, in the written description of the specification. If applicable, the showing must also identify: (1) each means- (or step) plus-function claim element that invokes consideration under 35 UDC 112, sixth paragraph; and (2) the structure, material, or acts in the specification that corresponds to each means- (or step) plus-function claim element that invokes consideration under 35 UDC 112, sixth paragraph; if the application claims the benefit of one or more applications under title 35, United States Code, the showing must also include where each limitation of the claims finds support under 35 USC 112, first paragraph, in each such application in which such supports exists;

6.6. an identification of any cited references that may be disqualified under 35 USC 103(c).

## REVIEW OF FACTS

The conditions I1-I4, II1-II5, II5.1- II5.3, II6.1- II6.4, and II6.6 above are considered to have been met.

However, the petition fails to comply with the conditions of item II6.5 above, for the reasons provided below. Therefore, the petition fails to meet the required conditions to be accorded special status under the accelerated examination procedure.

## ANALYSIS

On pages 22 thru 26 of the "ACCELERATED EXAMINATION SUPPORT DOCUMENT," petitioner sufficiently provides a showing of where each limitation of the claims finds support under 35 USC §112, first paragraph, in the written description of the instant specification. However, the instant application claims domestic priority to two separate applications, 12/575,442 and 61/455,985. To comply with item II6.5, petitioner is required to provide a showing of where each limitation of the claims finds support under 35 USC §112, first paragraph, in the written description of both 12/575,442 and 61/455,985. Furthermore, since the instant application is a continuation-in-part of the applications from which priority is claimed, any claim limitations not having support in the specification of 12/575,442 and 61/455,985 should clearly be identified as such. Additionally, it is recommended that petitioner provide three sets of claims where each set is mapped to each application to avoid any ambiguity or confusion.

## DECISION

For the above-stated reasons, the petition is **DISMISSED**.

Petitioner is given a single opportunity to perfect the petition. Any request for reconsideration of this decision must be submitted within 1 (one) month or 30 (thirty) days, whichever is longer, (no extension of time under 37 CFR 1.136(a)) from the date of this decision in order to be considered timely. Any request for reconsideration must address the deficiencies indicated above.

Petitioner is reminded that, upon granting of the special status of the application on request for reconsideration, the application will be processed expeditiously. However, due to the dismissal of the instant petition, examination may not be completed within twelve months of the filing date of the application.

Any inquiry regarding this decision should be directed to Eddie C. Lee at (571) 272-1732.

/Eddie C. Lee/

Eddie C. Lee
Quality Assurance Specialist
Technology Center 2100

UNITED STATES PATENT AND TRADEMARK OFFICE

UNITED STATES DEPARTMENT OF COMMERCE
United States Patent and Trademark Office
Address: COMMISSIONER FOR PATENTS
P.O. Box 1450
Alexandria, Virginia 22313-1450
www.uspto.gov

| APPLICATION NO. | FILING DATE | FIRST NAMED INVENTOR | ATTORNEY DOCKET NO. | CONFIRMATION NO. |
|---|---|---|---|---|
| 13/011,655 | 01/21/2011 | Thomas Zuber | 1188-1020 | 5103 |

73276 7590 04/01/2011

ZUBER & TAILLIEU LLP
777 SOUTH FIGUEROA ST., 37th FLOOR
LOS ANGELES, CA 90017

| EXAMINER | |
|---|---|
| ART UNIT | PAPER NUMBER |
| 2174 | |

| NOTIFICATION DATE | DELIVERY MODE |
|---|---|
| 04/01/2011 | ELECTRONIC |

**Please find below and/or attached an Office communication concerning this application or proceeding.**

The time period for reply, if any, is set in the attached communication.

Notice of the Office communication was sent electronically on above-indicated "Notification Date" to the following e-mail address(es):

patentgroup@ztllp.com

UNITED STATES PATENT AND TRADEMARK OFFICE

Commissioner for Patents
United States Patent and Trademark Office
P.O. Box 1450
Alexandria, VA 22313-1450
www.uspto.gov

ZUBER & TAILLIEU LLP
777 SOUTH FIGUEROA ST., 37th FLOOR
LOS ANGELES CA 90017

In re Application of:
ZUBER, Thomas
Serial No.: 13/011,655
Filed: January 21, 2011
Docket: **1188-1020**
Title: **METHOD FOR TAGGING DOCUMENTS AND COMMUNICATIONS WITH FILING AND BILLING INFORMATION**

DECISION ON PETITION TO MAKE SPECIAL FOR NEW APPLICATION UNDER 37 C.F.R. § 1.102 & M.P.E.P. § 708.02

This is a decision on the request for reconsideration of the petition to make special filed on March 16, 2011 to make the above-identified application special for accelerated examination procedure under 37 C.F.R. § 1.102(d). The decision herein is pursuant to the filing of the request for reconsideration dated January 12, 2011.

The petition to make the application special is **GRANTED**.

The application is eligible for accelerated examination and the petition complies with the conditions for granting the application special status pursuant to the "Change to Practice for Petitions in Patent Applications to Make Special and for Accelerated Examination" issued June 26, 2006, in the Federal Register. (71 Fed. Reg. 36323).

The prosecution of the instant application will be conducted expeditiously according to the following guidelines.

1. The application will be docketed to an examiner and taken up for action within two weeks of the date of this decision.

2. Restriction Practice:
   If the examiner determines that the claims are not directed to a single invention, a telephone request to elect one single invention will be made pursuant to MPEP 812.01. As a prerequisite to the grant of this petition, the applicant has agreed to make an oral

election, by telephone, without traverse. If the applicant refuses to make an election without traverse, or the examiner cannot reach the applicant after a reasonable effort, the examiner will treat the first claimed invention (invention defined by claim 1) as having being constructively elected without traverse for examination.

3. Office action:
If it is determined that, after appropriate consultation, there is a potential rejection or any other issue to be addressed, the examiner will telephone the applicant and arrange an interview to discuss and resolve the issue. An Office action, other than a Notice of Allowance and Fee(s) Due (Notice of Allowance), will not be issued unless either: 1) an interview was conducted but did not result in agreed to action that places the application in condition for allowance, or, 2) a determination is made that an interview would be unlikely to result in the application being placed in condition for allowance, and 3) an internal conference has been held to review any rejection of any claim.

4. Time for Reply:
An Office action other than a Notice of Allowance or a final Office action will set a shortened statutory period of one month or thirty days, whichever is longer, for reply with no extension of time available under 37 CFR 1.136(a). Failure to timely file a reply within this non-extendible period for reply will result in the abandonment of the application.

5. Reply by Applicant:
A timely reply to an Office action other than the Notice of Allowance must be submitted electronically via EFS or EFS-web and limited to addressing the rejections, objections and requirement made. Any amendment that attempts to: 1) add claims which would result in more than three pending independent claims or more than twenty pending total claims; 2) present claims not encompassed by the pre-examination search or an updated accelerated examination support document; or 3) present claims that are directed a non-elected invention or an invention other than that previously claimed and examined in the application, will be treated as not fully responsive and will not be entered.

For any amendment to the claims (including any new claim) that is not encompassed by the accelerated examination support document, applicant must provide an updated accelerated examination support document that encompasses the amended or new claims at the time of filing of the amendment.

To proceed expeditiously with the examination, it is recommended that a reply with amendments made to any claim or with any new claim being added be accompanied by an updated accelerated examination support document or a statement explaining how the amended or new claim is supported by the original accelerated examination support document.

6. Information Disclosure Statement (IDS):
   Any IDS filed during prosecution must be submitted electronically via EFS or EFS-web, accompanied by an updated accelerated examination support document, and be in compliance with 37 CFR 1.97 and 1.98.

7. Post-Allowance Processing:
   To expedite processing of the allowed application into a patent, the applicant must: 1) pay the required fees within one month of the date of the Notice of Allowance, and 2) not file any post allowance papers not required by the Office. In no event may the issue fee be paid and accepted later than three months from the date of the Notice of Allowance.

8. After-Final and Appeal Procedures:
   To expedite prosecution, after receiving the final Office action, applicant must: 1) promptly file a notice of appeal, an appeal brief and appeal fees; and 2) not request a pre-appeal brief conference.

   Any amendment, affidavit or other evidence filed after final Office action must comply with applicable rules and the requirements outlined in numbered paragraphs 5 and 6 above.

   On appeal, the application will proceed according to normal appeal procedures. After appeal, the application will again be treated special.

9. Proceedings Outside the Normal Examination Process:
   If the application becomes involved in a proceeding that is outside the normal examination process (e.g., a secrecy order, national security review, interference proceeding, petitions under 37 CFR 1.181, 182 or 183), the application will be treated special before and after such proceeding.

10. Final Disposition:
    The twelve month goal of this accelerated examination procedure ends with a final disposition. The mailing of a final Office action, a Notice of Allowance, the filing of a Notice of Appeal, or the filing of a Request for Continued Examination (RCE) is the final disposition.

If, during prosecution, a paper is not filed electronically using EFS-web, a reply is filed but is not fully responsive, the application is involved in an appeal, or a proceeding outside normal examination process, the application will still be examined expeditiously, however, the final disposition may occur more than twelve months from the filing of the application.

Any inquiry regarding this decision should be directed to Eddie C. Lee at (571) 272-1732.

/Eddie C. Lee/

Eddie C. Lee
Quality Assurance Specialist
Technology Center 2100

UNITED STATES PATENT AND TRADEMARK OFFICE

Commissioner for Patents
United States Patent and Trademark Office
P.O. Box 1450
Alexandria, VA 22313-1450
www.uspto.gov

**PILLSBURY WINTHROP SHAW PITTMAN, LLP**
**P.O. BOX 10500**
**MCLEAN VA 22102**

MAILED

MAR 14 2011

OFFICE OF PETITIONS

| | | |
|---|---|---|
| In re Application: | : | |
| Gatto et al. | : | |
| Application No. 13/011,723 | : | ON PETITION |
| Filed: January 21, 2011 | : | |
| Attorney Docket No. 055444-0391490 | : | |

This is a notice regarding your request for acceptance of a fee deficiency submission under 37 CFR 1.28 filed January 25, 2011.

On September 1, 1998, the Court of Appeals for the Federal Circuit held that 37 CFR 1.28(c) is the sole provision governing the time for correction of the erroneous payment of the issue fee as a small entity. **See DH Technology v. Synergystex International, Inc. 154 F.3d 1333, 47 USPQ2d 1865 (Fed. Cir. Sept. 1, 1998).**

The Office no longer investigates or rejects original or reissue applications under 37 CFR 1.56. **1098 Off. Gaz. Pat. Office 502 (January 3, 1989)**. Therefore, nothing in this Notice is intended to imply that an investigation was done.

Your fee deficiency submission under 37 CFR 1.28 is hereby **ACCEPTED**.

This application is no longer entitled to small entity status. Accordingly, all future fees paid in this application must be paid at the large entity rate.

Additionally, it is not apparent whether the person signing the instant petition was ever given a power of attorney or authorization of agent to prosecute this patent application. In accordance with 37 CFR 1.34(a), the signature appearing on the petition shall constitute a representation to the United States Patent and Trademark Office that he/she is authorized to represent the particular party in whose behalf he/she acts.

Telephone inquires concerning this decision should be directed to the undersigned at (571) 272-7751.

Joan Olszewski
Petitions Examiner
Office of Petitions

UNITED STATES PATENT AND TRADEMARK OFFICE

Commissioner for Patents
United States Patent and Trademark Office
P.O. Box 1450
Alexandria, VA 22313-1450
www.uspto.gov

**WORKMAN NYDEGGER**
**1000 EAGLE GATE TOWER**
**60 EAST SOUTH TEMPLE**
**SALT LAKE CITY UT 84111**

MAILED
SEP 13 2011
OFFICE OF PETITIONS

| | | |
|---|---|---|
| In re Application of | : | |
| Shankar Kumar MITRA et al. | : | DECISION GRANTING STATUS |
| Application No. 13/011,724 | : | UNDER 37 CFR 1.47(a) |
| Filed: January 21, 2011 | : | |
| Attorney Docket No. 16810.41.1 | : | |

This is in response to the petition under 37 CFR 1.47(a), filed August 01, 2011.

The petition is **GRANTED.**

Petitioner has shown that the non-signing inventors have refused to join in the filing of the above-identified application.

The application and papers have been reviewed and found in compliance with 37 CFR 1.47(a). This application is hereby accorded Rule 1.47(a) status.

As provided in 37 CFR 1.47(c), this Office will forward notice of this application's filing to the non-signing inventor at the address given in the petition. Notice of the filing of this application will also be published in the Official Gazette.

This application is being referred to the Office of Patent Application Processing for pre-examination processing.

Telephone inquiries regarding this decision should be directed to Michelle R. Eason at (571) 272-4231.

/for/ Thurman K. Page
Petitions Examiner
Office of Petitions

UNITED STATES PATENT AND TRADEMARK OFFICE

Commissioner for Patents
United States Patent and Trademark Office
P.O. Box 1450
Alexandria, VA 22313-1450
www.uspto.gov

**SHANKAR KUMAR MITRA**
**#48, KODIHALLI**
**HAL 2ND STAGE**
**BANGALORE 560008 IN**

MAILED
SEP 13 2011
OFFICE OF PETITIONS

In re Application of
Shankar Kumar MITRA et al.
Application No. 13/011,724
Filed: January 21, 2011
For: HERBAL SOLID FORMULATION AND PROCESS FOR PREPARING THE SAME

Dear Shankar Kumar Mitra:

You are named as a joint inventor in the above-identified United States patent application, filed under the provisions of 35 U.S.C. 116 (United States Code), and 37 CFR 1.47(a), Rules of Practice in Patent Cases. Should a patent be granted on the application you will be designated therein as a joint inventor.

As a named inventor you are entitled to inspect any paper in the file wrapper of the application, order copies of all or any part thereof (at a prepaid cost per 37 CFR 1.19) or make your position of record in the application. Alternatively, you may arrange to do any of the preceding through a registered patent attorney or agent presenting written authorization from you. If you care to join the application, counsel of record (see below) would presumably assist you. Joining the application would entail the filing of an appropriate oath or declaration by you pursuant to 37 CFR 1.63.

Telephone inquiries regarding this communication should be directed to Michelle R. Eason at (571) 272-4231. Requests for information regarding your application should be directed to the File Information Unit at (703) 308-2733. Information regarding how to pay for and order a copy of the application, or a specific paper in the application, should be directed to the Certification Division at (571) 272-3150 or 1 (800) 972-6382 (outside the Washington, DC area).

for Thurman K. Page
Petitions Examiner
Office of Petitions

cc: **WORKMAN NYDEGGER**
**1000 Eagle Gate Tower**
**60 East South Temple**
**Salt Lake City UT 84111**

UNITED STATES PATENT AND TRADEMARK OFFICE

Commissioner for Patents
United States Patent and Trademark Office
P.O. Box 1450
Alexandria, VA 22313-1450
www.uspto.gov

**ANU VRAT SHARMA**
**HOUSE NO. 260, 7TH MAIN, 1ST STAGE, AREKERE**
**MICO LAYOUT, BANNERGHATTA ROAD**
**BANGALORE 560076 IN**

MAILED

SEP 13 2011

OFFICE OF PETITIONS

In re Application of
Shankar Kumar MITRA et al.
Application No. 13/011,724
Filed: January 21, 2011
For: HERBAL SOLID FORMULATION AND PROCESS FOR PREPARING THE SAME

Dear Anu Vrat Sharma:

You are named as a joint inventor in the above-identified United States patent application, filed under the provisions of 35 U.S.C. 116 (United States Code), and 37 CFR 1.47(a), Rules of Practice in Patent Cases. Should a patent be granted on the application you will be designated therein as a joint inventor.

As a named inventor you are entitled to inspect any paper in the file wrapper of the application, order copies of all or any part thereof (at a prepaid cost per 37 CFR 1.19) or make your position of record in the application. Alternatively, you may arrange to do any of the preceding through a registered patent attorney or agent presenting written authorization from you. If you care to join the application, counsel of record (see below) would presumably assist you. Joining the application would entail the filing of an appropriate oath or declaration by you pursuant to 37 CFR 1.63.

Telephone inquiries regarding this communication should be directed to Michelle R. Eason at (571) 272-4231. Requests for information regarding your application should be directed to the File Information Unit at (703) 308-2733. Information regarding how to pay for and order a copy of the application, or a specific paper in the application, should be directed to the Certification Division at (571) 272-3150 or 1 (800) 972-6382 (outside the Washington, DC area).

for Thurman K. Page
Petitions Examiner
Office of Petitions

cc: **WORKMAN NYDEGGER**
**1000 Eagle Gate Tower**
**60 East South Temple**
**Salt Lake City UT 84111**

UNITED STATES PATENT AND TRADEMARK OFFICE

Commissioner for Patents
United States Patent and Trademark Office
P.O. Box 1450
Alexandria, VA 22313-1450
www.uspto.gov

Decision Date : February 13, 2012

In re Application of :

Jennifer Wilcox

Application No : 13011748

Filed : 21-Jan-2011

Attorney Docket No : STAN-147/01US 197110-2094

DECISION ON REQUEST TO WITHDRAW AS ATTORNEY/AGENTOF RECORD

This is an electronic decision on the Request to Withdraw as attorney or agent of record under 37 CFR § 1.36(b), filed February 13, 2012

The request is **APPROVED.**

The request was signed by William S. Galliani (registration no. 33885 ) on behalf of all attorneys/agents associated with Customer Number 58249 . All attorneys/agents associated with Cusotmer Number 58249 have been withdrawn.

Since there are no remaining attorneys of record, all future communications from the Office will be directed to the first named inventor or assignee that has properly made itself of record pursuant to 37 CFR 3.71, with correspondence address:

| | |
|---|---|
| Name | Board of Trustees of the Leland Stanford Junior Un |
| Name2 | |
| Address 1 | 1705 El Camino Real |
| Address 2 | |
| City | Palo Alto |
| State | CA |
| Postal Code | 94306 |
| Country | US |

As a reminder, requester is required to inform the first named inventor or assignee that has properly made itself of record pursuant to 37 CFR 3.71 of the electronically processed petition.

Telephone inquiries concerning this decision should be directed to the Patent Electronic Business Center (EBC) at 866-217-9197.

Office of Petitions

| | |
|---|---|
| **Doc Code: PET.AUTO**<br>**Document Description: Petition automatically granted by EFS-Web** | PTO/SB/83<br>U.S. Patent and Trademark Office<br>Department of Commerce |

| | |
|---|---|
| Electronic Petition Request | **REQUEST FOR WITHDRAWAL AS ATTORNEY OR AGENT AND CHANGE OF CORRESPONDENCE ADDRESS** |
| Application Number | 13011748 |
| Filing Date | 21-Jan-2011 |
| First Named Inventor | Jennifer Wilcox |
| Art Unit | 1776 |
| Examiner Name | JASON GREENE |
| Attorney Docket Number | STAN-147/01US 197110-2094 |
| Title | Nitrogen-Permeable Membranes and Uses Thereof |

◉ Please withdraw me as attorney or agent for the above identified patent application and the practitioners of record associated with Customer Number: 58249

The reason(s) for this request are those described in 37 CFR:

10.40(b)(4)

Certifications

☒ I/We have given reasonable notice to the client, prior to the expiration of the response period, that the practitioner(s) intend to withdraw from employment

☒ I/We have delivered to the client or a duly authorized representative of the client all papers and property (including funds) to which the client is entitled

☒ I/We have notified the client of any responses that may be due and the time frame within which the client must respond

Change the correspondence address and direct all future correspondence to the first named inventor or assignee that has properly made itself of record pursuant to 37 CFR 3.71:

| | |
|---|---|
| Name | Board of Trustees of the Leland Stanford Junior Un |
| Address | 1705 El Camino Real |
| City | Palo Alto |
| State | CA |
| Postal Code | 94306 |
| Country | US |

| I am authorized to sign on behalf of myself and all withdrawing practitioners. | |
|---|---|
| Signature | /William S. Galliani/ |
| Name | William S. Galliani |
| Registration Number | 33885 |

UNITED STATES PATENT AND TRADEMARK OFFICE

UNITED STATES DEPARTMENT OF COMMERCE
United States Patent and Trademark Office
Address: COMMISSIONER FOR PATENTS
P.O. Box 1450
Alexandria, Virginia 22313-1450
www.uspto.gov

| APPLICATION NO. | FILING DATE | FIRST NAMED INVENTOR | ATTORNEY DOCKET NO. | CONFIRMATION NO. |
|---|---|---|---|---|
| 13/011,761 | 01/21/2011 | Takeshi TAKAMIYA | SUTOSH.770AUS | 5354 |

20995 7590 07/08/2011
KNOBBE MARTENS OLSON & BEAR LLP
2040 MAIN STREET
FOURTEENTH FLOOR
IRVINE, CA 92614

| EXAMINER | |
|---|---|
| ART UNIT | PAPER NUMBER |
| 2189 | |

| NOTIFICATION DATE | DELIVERY MODE |
|---|---|
| 07/08/2011 | ELECTRONIC |

**Please find below and/or attached an Office communication concerning this application or proceeding.**

The time period for reply, if any, is set in the attached communication.

Notice of the Office communication was sent electronically on above-indicated "Notification Date" to the following e-mail address(es):

jcartee@kmob.com
efiling@kmob.com
eOAPilot@kmob.com

UNITED STATES PATENT AND TRADEMARK OFFICE

Commissioner for Patents
United States Patent and Trademark Office
P.O. Box 1450
Alexandria, VA 22313-1450
www.uspto.gov

KNOBBE MARTENS OLSON & BEAR LLP
2040 MAIN STREET
FOURTEENTH FLOOR
IRVINE CA 92614

In re Application of: TAKAMIYA et al.
Application No. 13/011,761
Attorney Docket #: **SUTOSH.770AUS**
Filed: January 21, 2011
For: **MEMORY CONTROLLER AND MEMORY CONTROL METHOD**

DECISION ON REQUEST TO PARTICIPATE IN PATENT PROSECUTION HIGHWAY PROGRAM AND PETITION TO MAKE SPECIAL UNDER 37 CFR 1.102(a)

This is a decision on the renewed request to participate in the Patent Prosecution Highway (PPH) program and the petition under 37 CFR 1.102(a), filed May 27, 2011 to make the above-identified application special.

The petition is **GRANTED.**

A grantable request to participate in the PPH program and petition to make special require:

(1) The U.S. application is
(a) a Paris Convention application which either
(i) validly claims priority under 35 U.S.C. 119(a) and 37 CFR 1.55 to one or more applications filed in the JPO, or
(ii) validly claims priority to a PCT application that contains no priority claims,

Or

(b) a national stage application under the PCT (an application which entered the national stage in the U.S. from a PCT international application after compliance with 35 U.S.C. 371), which PCT application
(i) validly claims priority to an application filed in the JPO, or
(ii) validly claims priority to a PCT application that contains no priority claims, or
(iii) contains no priority claim,

Or

(c) a so-called bypass application filed under 35 U.S.C. 111 (a) which validly claims benefit under 35 U.S.C. 120 to a PCT application, which PCT application
(i) validly claims priority to an application filed in the JPO, or
(ii) validly claims priority to a PCT application that contains no priority claims, or
(iii) contains no priority claim.

Where the JPO application that contains the allowable/patentable claims is not the same application for which priority is claimed in the U.S. application, applicant must identify the relationship between the JPO application that contains the allowable/patentable claims and the JPO priority application claimed in the U.S. application.

(2) Applicant must submit a copy of:
a. The allowable/patentable claim(s) from the JPO application(s) or if a copy of the allowable/patentable claims is available via the Dossier Access System (DAS) applicant may request the USPTO obtain a copy from the DAS, however if the USPTO is unable to obtain a copy from the DAS the applicant will be required to submit a copy;
b. An English translation of the allowable/patentable claim(s) and
c. A statement that the English translation is accurate;

Effective January 29, 2010, for a period of two years ending on January 28, 2012, the USPTO will accept claims written in dependent form in the U.S. application which are narrower in scope than the allowable/patentable claims in the Japanese application.

(3) Applicant must:
a. Ensure all the claims in the U.S. application must sufficiently correspond or be amended to sufficiently correspond to the allowable/patentable claim(s) in the JPO application(s) and
b. Submit a claims correspondence table in English;

(4) Examination of the U.S. application has not begun;

(5) Applicant must submit:
a. Documentation of prior office action:
i. a copy of the office action(s)just prior to the "Decision to Grant a Patent" from each of the JPO application(s) containing the allowable/patentable claim(s) or
ii. if the allowable/patentable claims(s) are from a "Notification of Reasons for Refusal" then the Notification of Reasons for Refusal or
iii. if the JPO application is a first action allowance then no office action from the JPO is necessary should be indicated on the request/petition form;

Further, if a copy of the documents from a above is available via the Dossier Access System (DAS) applicant may request the USPTO obtain a copy from the DAS, however if the USPTO is unable to obtain a copy from the DAS the applicant will be required to submit a copy;

b. An English language translation of the JPO Office action from (5)(a)(i)-(ii) above

c. A statement that the English translation is accurate;

Effective January 29, 2010, Applicants may submit a machine translation into the English language of the copy of the latest JPO office action just prior to the

"Decision to Grant a Patent" (e.g., the latest "Notification of Reasons for Refusal") from each of the JPO application(s) containing the allowable/patentable claims that are the basis for the PPH request. The machine translation into the English language must be one that is provided by the JPO. That is, the machine translation into the English language cannot be one that is provided by a commercial service. Where a machine translation into the English language of the copy of the latest JPO office action (obtained from the JPO) is submitted, it will not be necessary to include a statement that the English translation is accurate.

(6) Applicant must submit:
   a. An IDS listing the documents cited by the JPO examiner in the JPO office action (unless already submitted in this application)
   b. Copies of the documents except U.S. patents or U.S. patent application publications (unless already submitted in this application);

The petition is **GRANTED.**

The request to participate in the PPH pilot program and petition are found to comply with the above requirements. Accordingly, the above-identified application has been accorded "special" status.

Telephone inquiries concerning this decision should be directed to Mano Padmanabhan at 571-272-4210.

All other inquiries concerning the examination or status of the application is accessible in the PAIR system at http://www.uspto.gov/ebc/index.html.

The application is being forwarded to the examiner for action on the merits commensurate with this decision.

/Mano Padmanabhan/

---

Mano Padmanabhan
Quality Assurance Specialist, Technology Center 2100, Workgroup 2180
571-272-4210

**Doc Code: PET.GREEN**
**Document Description: Petition for Green Tech Pilot**

PTO/SB/420 (11-10)
Approved for use through 01/31/2011. OMB 0651-0062
U.S. Patent and Trademark Office; U. S. DEPARTMENT OF COMMERCE
Under the Paperwork Reduction Act of 1995, no persons are required to respond to a collection of information unless it displays a valid OMB control number.

# PETITION TO MAKE SPECIAL UNDER THE GREEN TECHNOLOGY PILOT PROGRAM

| Attorney Docket Number: 12956-108-999 | Application Number (if known): Not Yet Assigned | Filing date: Herewith |
|---|---|---|
| First Named Inventor: Anthony P. Burgard | | |
| Title: METHODS FOR INCREASING PRODUCT YIELDS | | |

**APPLICANT HEREBY REQUESTS TO PARTICIPATE IN THE GREEN TECHNOLOGY PILOT PROGRAM FOR THE ABOVE-IDENTIFIED APPLICATION. See Instruction Sheet on page 2.**

This petition must be timely filed electronically using the USPTO electronic filing system, EFS-Web.

1. By filing this petition:

   **Applicant is requesting early publication: Applicant hereby requests early publication under 37 CFR 1.219 and the publication fee set forth in 37 CFR 1.18(d) accompanies this request.**

2. By filing this petition: applicant is agreeing to make an election without traverse in a telephonic interview and elect an invention that meets the eligibility requirements for the Green Technology Pilot Program, if the Office determines that the claims are not obviously directed to a single invention. See Instruction Sheet.

3. This request is accompanied by statements of special status for the eligibility requirement.

4. The application contains no more than three (3) independent claims and twenty (20) total claims.

5. The application does not contain any multiple dependent claims.

6. Other attachments: Preliminary amendment

| Signature /Victor Behar/ | Date 1/21/2011 |
|---|---|
| Name (Print/Typed) Victor Behar | Registration Number 60,691 |

***Note:*** *Signatures of all the inventors or assignees of record of the entire interest or their representative(s) are required in accordance with 37 CFR 1.33 and 11.18. Please see 37 CFR 1.4(d) for the form of the signature. If necessary, submit multiple forms for more than one signature see below*.*

[X] *Total of 1 forms are submitted.

The information is required to obtain or retain a benefit by the public which is to file (and by the USPTO to process) an application. Confidentiality is governed by 35 U.S.C. 122 and 37 CFR 1.11 and 1.14. This collection is estimated to take 12 hours to complete, including gathering, preparing, and submitting the completed application form to the USPTO. Time will vary depending upon the individual case. Any comments on the amount of time you require to complete this form and/or suggestions for reducing this burden, should be sent to the Chief Information Officer, U.S. Patent and Trademark Office, U.S. Department of Commerce, P.O. Box 1450, Alexandria, VA 22313-1450. DO NOT SEND FEES OR COMPLETED FORMS TO THIS ADDRESS. **SEND TO: Commissioner for Patents, P.O. Box 1450, Alexandria, VA 22313-1450.**

*If you need assistance in completing the form, call 1-800-PTO-9199 and select option 2.*

**PATENT**

**IN THE UNITED STATES PATENT AND TRADEMARK OFFICE**

| | | | |
|---|---|---|---|
| Application of: | Burgard, *et al.* | Confirmation No.: | Not yet assigned |
| Serial No.: | Not yet assigned | Art Unit: | Not yet assigned |
| Filed: | Herewith | Examiner: | Not yet assigned |
| For: | METHODS FOR INCREASING PRODUCT YIELDS | Attorney Docket No.: (CAM) | 12956-108-999 (871943-999108) |

**STATEMENT OF SPECIAL STATUS FOR PETITION TO MAKE SPECIAL UNDER GREEN TECHNOLOGY PILOT PROGRAM**

Commissioner for Patents
P.O. Box 1450
Alexandria, VA 22313-1450

Sir:

Pursuant to the Notice of the Pilot Program for Green Technologies set forth in the Federal Register, Vol. 74, No. 234, pages 64666-64669 (December 8, 2009) and extended pursuant to the Expansion and Extension of the Green Technology Pilot Program set forth in the Federal Register, Vol.75, No 217, pages 69049-69050 (November 10, 2010), Applicants submit herewith a Petition to Make Special that satisfies the requirements set forth in the Notice. Pursuant to the requirements of the Green Technology Pilot Program, Applicants hereby state that the invention relates to bioproduction of chemicals with reduced need for petroleum-based products, enhanced energy conservation, and reduced greenhouse gas emissions. In particular, the claimed invention relates to microbial organisms and methods of use of such organisms for the production of commodity chemicals with enhanced product yields. Applicants submit that the claims appear to substantially fall under the Classification Requirements set forth in section VI of the Notice as (A) alternative energy production, (10) genetically engineered organism.

As required in the Notice, please charge the publication fee under 37 CFR 1.18(d) of $300.00 to Deposit Account No. 503013 (Ref: 871943-999108). Please charge any shortage in

fees due in connection with the filing of this paper, including extension of time fees, to Deposit Account 503013 (Ref: 871943-999108)and please credit any excess fees to such deposit account.

Respectfully submitted,

Date: January 21, 2011

/Victor Behar/

*By:* Victor Behar **Reg. No. 60,691**
**JONES DAY**
12265 El Camino Real, Suite 200
San Diego, California 92130
(858) 314-1200

*For*: David A. Gay **Reg. No. 39,200**
**JONES DAY**
12265 El Camino Real, Suite 200
San Diego, California 92130
(858) 314-1200

UNITED STATES PATENT AND TRADEMARK OFFICE

UNITED STATES DEPARTMENT OF COMMERCE
United States Patent and Trademark Office
Address: COMMISSIONER FOR PATENTS
P.O. Box 1450
Alexandria, Virginia 22313-1450
www.uspto.gov

| APPLICATION NO. | FILING DATE | FIRST NAMED INVENTOR | ATTORNEY DOCKET NO. | CONFIRMATION NO. |
|---|---|---|---|---|
| 13/011,788 | 01/21/2011 | Anthony P. BURGARD | 12956-108-999 | 5412 |

20583 7590 05/31/2011

JONES DAY
222 EAST 41ST ST
NEW YORK, NY 10017

| EXAMINER | |
|---|---|
| ART UNIT | PAPER NUMBER |
| 1632 | |

| MAIL DATE | DELIVERY MODE |
|---|---|
| 05/31/2011 | PAPER |

**Please find below and/or attached an Office communication concerning this application or proceeding.**

The time period for reply, if any, is set in the attached communication.

UNITED STATES PATENT AND TRADEMARK OFFICE

Commissioner for Patents
United States Patent and Trademark Office
P.O. Box 1450
Alexandria, VA 22313-1450
www.uspto.gov

MAY 31 2011

JONES DAY
222 EAST 41ST ST
NEW YORK NY 10017

In re Application of :

| | | |
|---|---|---|
| BURGARD, Anthony *et al.* | : | DECISION ON PETITION |
| Application No. 13/011788 | : | TO MAKE SPECIAL UNDER |
| Filed: January 21, 2011 | : | THE GREEN TECHNOLOGY |
| Attorney Docket No. 12956-108-999 | : | PILOT PROGRAM |

This is a decision on the petition under 37 CFR 1.102, filed January 21, 2011, to make the above-identified application special under the pilot program for applications pertaining to Green Technologies as set forth in 74 Federal Register Notice 64666 (December 8, 2009) and amended by 75 Federal Register Notice 28554 (May 21, 2010) and 75 Federal Register Notice 69049 (November 10, 2010).

The petition is **GRANTED**.

A grantable petition to make an application special under 37 CFR 1.102 and the pilot program as set forth in 74 FR 64666 must be directed to a nonprovisional application filed under 35 USC 111(a) or be a national stage entry under 35 USC 371, exclusive of any reissue applications.

In order to qualify for special status, the following requirements must be met. 1) The application must have no more than 3 independent claims and no more than 20 total claims. 2) The application must not contain any multiple dependent claims. 3) The petition must state the basis for seeking special status, i.e., the claimed invention either: A) materially enhances the quality of the environment or B) materially contributes to: i) the discovery or development of renewable energy resources, ii) the more efficient utilization and conservation of energy resources, or iii) greenhouse gas emission reduction. 4) If the disclosure is not clear on its face that the claimed invention materially contributes under category (A) or (B), the petition must be accompanied by a statement by the applicant, assignee, or an attorney/agent registered to practice before the Office explaining how the materiality standard is met. 5) A statement that applicant will agree to make an election without traverse in a telephonic interview if a restriction requirement is made by the examiner. 6) The petition to make special must be filed electronically. 7) The petition must be filed at least one day prior to the date that a first Office Action appears in the Patent Application Information Retrieval (PAIR) system. 8) The petition must be accompanied by a request for early publication in compliance with 37 CFR 1.219 and include the publication fee as set forth in 37 CFR 1.18(d).

The requirement for a fee for consideration of the petition to make special for applications pertaining to Green Technologies has been waived.

The instant petition complies with items 1 – 8 above. Accordingly, the above-identified application has been accorded "special" status.

Telephone inquires concerning this decision should be directed to Manjunath Rao at 571-272-0939.

The application is being forwarded to the Technology Center Art Unit 1632 for action on the merits commensurate with this decision.

/Manjunath Rao/

Manjunath Rao
Supervisory Patent Examiner &
POC for TC 1600 Green Tech Petitions
Technology Center 1600

**Doc Code: PET.GREEN**
**Document Description: Petition for Green Tech Pilot**

PTO/SB/420 (11-10)
Approved for use through 01/31/2011. OMB 0651-0062
U.S. Patent and Trademark Office; U. S. DEPARTMENT OF COMMERCE
Under the Paperwork Reduction Act of 1995, no persons are required to respond to a collection of information unless it displays a valid OMB control number.

# PETITION TO MAKE SPECIAL UNDER THE GREEN TECHNOLOGY PILOT PROGRAM

| Attorney Docket Number: 12956-084-999 | Application Number (if known): Not yet assigned | Filing date: Herewith |
|---|---|---|
| First Named Inventor: Anthony P. Burgard | | |
| Title: METHODS FOR INCREASING PRODUCT YIELDS | | |

**APPLICANT HEREBY REQUESTS TO PARTICIPATE IN THE GREEN TECHNOLOGY PILOT PROGRAM FOR THE ABOVE-IDENTIFIED APPLICATION. See Instruction Sheet on page 2.**

This petition must be timely filed electronically using the USPTO electronic filing system, EFS-Web.

1. By filing this petition:

   **Applicant is requesting early publication: Applicant hereby requests early publication under 37 CFR 1.219 and the publication fee set forth in 37 CFR 1.18(d) accompanies this request.**

2. By filing this petition: applicant is agreeing to make an election without traverse in a telephonic interview and elect an invention that meets the eligibility requirements for the Green Technology Pilot Program, if the Office determines that the claims are not obviously directed to a single invention. See Instruction Sheet.

3. This request is accompanied by statements of special status for the eligibility requirement.

4. The application contains no more than three (3) independent claims and twenty (20) total claims.

5. The application does not contain any multiple dependent claims.

6. Other attachments: Preliminary amendment

| Signature /Victor Behar/ | Date 1/21/2011 |
|---|---|
| Name (Print/Typed) Victor Behar | Registration Number 60,691 |

***Note:*** *Signatures of all the inventors or assignees of record of the entire interest or their representative(s) are required in accordance with 37 CFR 1.33 and 11.18. Please see 37 CFR 1.4(d) for the form of the signature. If necessary, submit multiple forms for more than one signature see below*.*

☒ *Total of 1 forms are submitted.

The information is required to obtain or retain a benefit by the public which is to file (and by the USPTO to process) an application. Confidentiality is governed by 35 U.S.C. 122 and 37 CFR 1.11 and 1.14. This collection is estimated to take 12 hours to complete, including gathering, preparing, and submitting the completed application form to the USPTO. Time will vary depending upon the individual case. Any comments on the amount of time you require to complete this form and/or suggestions for reducing this burden, should be sent to the Chief Information Officer, U.S. Patent and Trademark Office, U.S. Department of Commerce, P.O. Box 1450, Alexandria, VA 22313-1450. DO NOT SEND FEES OR COMPLETED FORMS TO THIS ADDRESS. **SEND TO: Commissioner for Patents, P.O. Box 1450, Alexandria, VA 22313-1450.**

*If you need assistance in completing the form, call 1-800-PTO-9199 and select option 2.*

**PATENT**

**IN THE UNITED STATES PATENT AND TRADEMARK OFFICE**

| | | | |
|---|---|---|---|
| Application of: | Burgard, *et al.* | Confirmation No.: | Not yet assigned |
| Serial No.: | Not yet assigned | Art Unit: | Not yet assigned |
| Filed: | Herewith | Examiner: | Not yet assigned |
| For: | METHODS FOR INCREASING PRODUCT YIELDS | Attorney Docket No.: (CAM) | 12956-084-999 (871943-999084) |

**STATEMENT OF SPECIAL STATUS FOR PETITION TO MAKE SPECIAL UNDER GREEN TECHNOLOGY PILOT PROGRAM**

Commissioner for Patents
P.O. Box 1450
Alexandria, VA 22313-1450

Sir:

Pursuant to the Notice of the Pilot Program for Green Technologies set forth in the Federal Register, Vol. 74, No. 234, pages 64666-64669 (December 8, 2009) and extended pursuant to the Expansion and Extension of the Green Technology Pilot Program set forth in the Federal Register, Vol.75, No 217, pages 69049-69050 (November 10, 2010), Applicants submit herewith a Petition to Make Special that satisfies the requirements set forth in the Notice. Pursuant to the requirements of the Green Technology Pilot Program, Applicants hereby state that the invention relates to bioproduction of chemicals with reduced need for petroleum-based products, enhanced energy conservation, and reduced greenhouse gas emissions. In particular, the claimed invention relates to microbial organisms and methods of use of such organisms for the production of commodity chemicals with enhanced product yields. Applicants submit that the claims appear to substantially fall under the Classification Requirements set forth in section VI of the Notice as (A) alternative energy production, (10) genetically engineered organism.

As required in the Notice, please charge the publication fee under 37 CFR 1.18(d) of $300.00 to Deposit Account No. 503013 (Ref: 871943-999084). Please charge any shortage in

fees due in connection with the filing of this paper, including extension of time fees, to Deposit Account 503013 (Ref: 871943-999084)and please credit any excess fees to such deposit account.

Respectfully submitted,

Date: January 21, 2011

/Victor Behar/

*By:* Victor Behar **Reg. No. 60,691**
**JONES DAY**
12265 El Camino Real, Suite 200
San Diego, California 92130
(858) 314-1200

*For*: David A. Gay **Reg. No. 39,200**
**JONES DAY**
12265 El Camino Real, Suite 200
San Diego, California 92130
(858) 314-1200

UNITED STATES PATENT AND TRADEMARK OFFICE

UNITED STATES DEPARTMENT OF COMMERCE
United States Patent and Trademark Office
Address: COMMISSIONER FOR PATENTS
P.O. Box 1450
Alexandria, Virginia 22313-1450
www.uspto.gov

| APPLICATION NO. | FILING DATE | FIRST NAMED INVENTOR | ATTORNEY DOCKET NO. | CONFIRMATION NO. |
|---|---|---|---|---|
| 13/011,796 | 01/21/2011 | Anthony P. BURGARD | 12956-084-999 | 5431 |

20583 7590 05/31/2011

JONES DAY
222 EAST 41ST ST
NEW YORK, NY 10017

| EXAMINER | |
|---|---|
| ART UNIT | PAPER NUMBER |
| 1632 | |

| MAIL DATE | DELIVERY MODE |
|---|---|
| 05/31/2011 | PAPER |

**Please find below and/or attached an Office communication concerning this application or proceeding.**

The time period for reply, if any, is set in the attached communication.

UNITED STATES PATENT AND TRADEMARK OFFICE

Commissioner for Patents
United States Patent and Trademark Office
P.O. Box 1450
Alexandria, VA 22313-1450
www.uspto.gov

JONES DAY
222 EAST 41ST ST
NEW YORK NY 10017

| | | |
|---|---|---|
| *In re* Application of | : | |
| BURGARD, Anthony *et al.* | : | DECISION ON PETITION |
| Application No. 13/011796 | : | TO MAKE SPECIAL UNDER |
| Filed: January 21, 2011 | : | THE GREEN TECHNOLOGY |
| Attorney Docket No. 12956-084-999 | : | PILOT PROGRAM |

This is a decision on the petition under 37 CFR 1.102, filed January 21, 2011, to make the above-identified application special under the pilot program for applications pertaining to Green Technologies as set forth in 74 Federal Register Notice 64666 (December 8, 2009) and amended by 75 Federal Register Notice 28554 (May 21, 2010) and 75 Federal Register Notice 69049 (November 10, 2010).

The petition is **GRANTED**.

A grantable petition to make an application special under 37 CFR 1.102 and the pilot program as set forth in 74 FR 64666 must be directed to a nonprovisional application filed under 35 USC 111(a) or be a national stage entry under 35 USC 371, exclusive of any reissue applications.

In order to qualify for special status, the following requirements must be met. 1) The application must have no more than 3 independent claims and no more than 20 total claims. 2) The application must not contain any multiple dependent claims. 3) The petition must state the basis for seeking special status, i.e., the claimed invention either: A) materially enhances the quality of the environment or B) materially contributes to: i) the discovery or development of renewable energy resources, ii) the more efficient utilization and conservation of energy resources, or iii) greenhouse gas emission reduction. 4) If the disclosure is not clear on its face that the claimed invention materially contributes under category (A) or (B), the petition must be accompanied by a statement by the applicant, assignee, or an attorney/agent registered to practice before the Office explaining how the materiality standard is met. 5) A statement that applicant will agree to make an election without traverse in a telephonic interview if a restriction requirement is made by the examiner. 6) The petition to make special must be filed electronically. 7) The petition must be filed at least one day prior to the date that a first Office Action appears in the Patent Application Information Retrieval (PAIR) system. 8) The petition must be accompanied by a request for early publication in compliance with 37 CFR 1.219 and include the publication fee as set forth in 37 CFR 1.18(d).

The requirement for a fee for consideration of the petition to make special for applications pertaining to Green Technologies has been waived.

The instant petition complies with items 1 – 8 above. Accordingly, the above-identified application has been accorded "special" status.

Telephone inquires concerning this decision should be directed to Manjunath Rao at 571-272-0939.

The application is being forwarded to the Technology Center Art Unit 1652 for action on the merits commensurate with this decision.

/Manjunath Rao/

Manjunath Rao
Supervisory Patent Examiner &
POC for TC 1600 Green Tech Petitions
Technology Center 1600

**PATENT**

**IN THE UNITED STATES PATENT AND TRADEMARK OFFICE**

| | | | |
|---|---|---|---|
| Application of: | Burgard, *et al.* | Confirmation No.: | Not yet assigned |
| Serial No.: | Not yet assigned | Art Unit: | Not yet assigned |
| Filed: | Herewith | Examiner: | Not yet assigned |
| For: | METHODS FOR INCREASING PRODUCT YIELDS | Attorney Docket No.: (CAM) | 12956-109-999 (871943-999109) |

**STATEMENT OF SPECIAL STATUS FOR PETITION TO MAKE SPECIAL UNDER GREEN TECHNOLOGY PILOT PROGRAM**

Commissioner for Patents
P.O. Box 1450
Alexandria, VA 22313-1450

Sir:

Pursuant to the Notice of the Pilot Program for Green Technologies set forth in the Federal Register, Vol. 74, No. 234, pages 64666-64669 (December 8, 2009) and extended pursuant to the Expansion and Extension of the Green Technology Pilot Program set forth in the Federal Register, Vol.75, No 217, pages 69049-69050 (November 10, 2010), Applicants submit herewith a Petition to Make Special that satisfies the requirements set forth in the Notice. Pursuant to the requirements of the Green Technology Pilot Program, Applicants hereby state that the invention relates to bioproduction of chemicals with reduced need for petroleum-based products, enhanced energy conservation, and reduced greenhouse gas emissions. In particular, the claimed invention relates to microbial organisms and methods of use of such organisms for the production of commodity chemicals with enhanced product yields. Applicants submit that the claims appear to substantially fall under the Classification Requirements set forth in section VI of the Notice as (A) alternative energy production, (10) genetically engineered organism.

As required in the Notice, please charge the publication fee under 37 CFR 1.18(d) of $300.00 to Deposit Account No. 503013 (Ref: 871943-999109). Please charge any shortage in fees due in connection with the filing of this paper, including extension of time fees, to Deposit

Account 503013 (Ref: 871943-999109) and please credit any excess fees to such deposit account.

Respectfully submitted,

Date: January 21, 2011

/Victor Behar/

*By:* Victor Behar **Reg. No. 60,691**
**JONES DAY**
12265 El Camino Real, Suite 200
San Diego, California 92130
(858) 314-1200

*For*: David A. Gay **Reg. No. 39,200**
**JONES DAY**
12265 El Camino Real, Suite 200
San Diego, California 92130
(858) 314-1200

**Doc Code: PET.GREEN**
**Document Description: Petition for Green Tech Pilot**

PTO/SB/420 (11-10)
Approved for use through 01/31/2011. OMB 0651-0062
U.S. Patent and Trademark Office; U. S. DEPARTMENT OF COMMERCE
Under the Paperwork Reduction Act of 1995, no persons are required to respond to a collection of information unless it displays a valid OMB control number.

# PETITION TO MAKE SPECIAL UNDER THE GREEN TECHNOLOGY PILOT PROGRAM

| Attorney Docket Number: 12956-109-999 | Application Number (if known): Not yet assigned | Filing date: Herewith |
|---|---|---|
| First Named Inventor: Anthony P. Burgard | | |
| Title: METHODS FOR INCREASING PRODUCT YIELDS | | |

**APPLICANT HEREBY REQUESTS TO PARTICIPATE IN THE GREEN TECHNOLOGY PILOT PROGRAM FOR THE ABOVE-IDENTIFIED APPLICATION. See Instruction Sheet on page 2.**

This petition must be timely filed electronically using the USPTO electronic filing system, EFS-Web.

1. By filing this petition:

   **Applicant is requesting early publication: Applicant hereby requests early publication under 37 CFR 1.219 and the publication fee set forth in 37 CFR 1.18(d) accompanies this request.**

2. By filing this petition: applicant is agreeing to make an election without traverse in a telephonic interview and elect an invention that meets the eligibility requirements for the Green Technology Pilot Program, if the Office determines that the claims are not obviously directed to a single invention. See Instruction Sheet.

3. This request is accompanied by statements of special status for the eligibility requirement.

4. The application contains no more than three (3) independent claims and twenty (20) total claims.

5. The application does not contain any multiple dependent claims.

6. Other attachments: Preliminary amendment

| Signature /Victor Behar/ | Date 1/21/2011 |
|---|---|
| Name (Print/Typed) Victor Behar | Registration Number 60,691 |

***Note:*** *Signatures of all the inventors or assignees of record of the entire interest or their representative(s) are required in accordance with 37 CFR 1.33 and 11.18. Please see 37 CFR 1.4(d) for the form of the signature. If necessary, submit multiple forms for more than one signature see below*.*

[X] *Total of 1 forms are submitted.

The information is required to obtain or retain a benefit by the public which is to file (and by the USPTO to process) an application. Confidentiality is governed by 35 U.S.C. 122 and 37 CFR 1.11 and 1.14. This collection is estimated to take 12 hours to complete, including gathering, preparing, and submitting the completed application form to the USPTO. Time will vary depending upon the individual case. Any comments on the amount of time you require to complete this form and/or suggestions for reducing this burden, should be sent to the Chief Information Officer, U.S. Patent and Trademark Office, U.S. Department of Commerce, P.O. Box 1450, Alexandria, VA 22313-1450. DO NOT SEND FEES OR COMPLETED FORMS TO THIS ADDRESS. **SEND TO: Commissioner for Patents, P.O. Box 1450, Alexandria, VA 22313-1450.**

*If you need assistance in completing the form, call 1-800-PTO-9199 and select option 2.*

UNITED STATES PATENT AND TRADEMARK OFFICE

UNITED STATES DEPARTMENT OF COMMERCE
United States Patent and Trademark Office
Address: COMMISSIONER FOR PATENTS
P.O. Box 1450
Alexandria, Virginia 22313-1450
www.uspto.gov

| APPLICATION NO. | FILING DATE | FIRST NAMED INVENTOR | ATTORNEY DOCKET NO. | CONFIRMATION NO. |
|---|---|---|---|---|
| 13/011,818 | 01/21/2011 | Anthony P. BURGARD | 12956-109-999 | 5476 |

20583 7590 06/06/2011

JONES DAY
222 EAST 41ST ST
NEW YORK, NY 10017

| EXAMINER | |
|---|---|
| ART UNIT | PAPER NUMBER |
| 1653 | |

| MAIL DATE | DELIVERY MODE |
|---|---|
| 06/06/2011 | PAPER |

**Please find below and/or attached an Office communication concerning this application or proceeding.**

The time period for reply, if any, is set in the attached communication.

UNITED STATES PATENT AND TRADEMARK OFFICE

Commissioner for Patents
United States Patent and Trademark Office
P.O. Box 1450
Alexandria, VA 22313-1450
www.uspto.gov

JUN 0 6 2011

JONES DAY
222 EAST 41ST ST
NEW YORK NY 10017

In re Application of :

| | | |
|---|---|---|
| BURGARD, Anthony *et al.* | : | DECISION ON PETITION |
| Application No. 13/011818 | : | TO MAKE SPECIAL UNDER |
| Filed: January 21, 2011 | : | THE GREEN TECHNOLOGY |
| Attorney Docket No. 12956-109-999 | : | PILOT PROGRAM |

This is a decision on the petition under 37 CFR 1.102, filed January 21, 2011, to make the above-identified application special under the pilot program for applications pertaining to Green Technologies as set forth in 74 Federal Register Notice 64666 (December 8, 2009) and amended by 75 Federal Register Notice 28554 (May 21, 2010) and 75 Federal Register Notice 69049 (November 10, 2010).

The petition is **GRANTED**.

A grantable petition to make an application special under 37 CFR 1.102 and the pilot program as set forth in 74 FR 64666 must be directed to a nonprovisional application filed under 35 USC 111(a) or be a national stage entry under 35 USC 371, exclusive of any reissue applications.

In order to qualify for special status, the following requirements must be met. 1) The application must have no more than 3 independent claims and no more than 20 total claims. 2) The application must not contain any multiple dependent claims. 3) The petition must state the basis for seeking special status, i.e., the claimed invention either: A) materially enhances the quality of the environment or B) materially contributes to: i) the discovery or development of renewable energy resources, ii) the more efficient utilization and conservation of energy resources, or iii) greenhouse gas emission reduction. 4) If the disclosure is not clear on its face that the claimed invention materially contributes under category (A) or (B), the petition must be accompanied by a statement by the applicant, assignee, or an attorney/agent registered to practice before the Office explaining how the materiality standard is met. 5) A statement that applicant will agree to make an election without traverse in a telephonic interview if a restriction requirement is made by the examiner. 6) The petition to make special must be filed electronically. 7) The petition must be filed at least one day prior to the date that a first Office Action appears in the Patent Application Information Retrieval (PAIR) system. 8) The petition must be accompanied by a request for early publication in compliance with 37 CFR 1.219 and include the publication fee as set forth in 37 CFR 1.18(d).

The requirement for a fee for consideration of the petition to make special for applications pertaining to Green Technologies has been waived.

The instant petition complies with items 1 – 8 above. Accordingly, the above-identified application has been accorded "special" status.

Telephone inquires concerning this decision should be directed to Manjunath Rao at 571-272-0939.

The application is being forwarded to the Technology Center Art Unit 1632 for action on the merits commensurate with this decision.

/Manjunath Rao/

Manjunath Rao
Supervisory Patent Examiner &
POC for TC 1600 Green Tech Petitions
Technology Center 1600

**Doc Code: PET.GREEN**
**Document Description: Petition for Green Tech Pilot**

PTO/SB/420 (03-11)

# PETITION TO MAKE SPECIAL UNDER THE GREEN TECHNOLOGY PILOT PROGRAM

| Attorney Docket Number: 66630/S1170 | Application Number (if known): 13/011,836 | Filing date: January 21, 2011 |
|---|---|---|

First Named Inventor: Chiyoung Lee, et al.

Title: TERMINAL OF RECHARGEABLE BATTERY AND METHOD OF MANUFACTURING THE SAME

**APPLICANT HEREBY REQUESTS TO PARTICIPATE IN THE GREEN TECHNOLOGY PILOT PROGRAM FOR THE ABOVE-IDENTIFIED APPLICATION. See Instruction Sheet on page 2.**

This petition must be timely filed electronically using the USPTO electronic filing system, EFS-Web.

1. By filing this petition:

   **Applicant is requesting early publication: Applicant hereby requests early publication under 37 CFR 1.219 and the publication fee set forth in 37 CFR 1.18(d) accompanies this request.**

2. By filing this petition: applicant is agreeing to make an election without traverse in a telephonic interview and elect an invention that meets the eligibility requirements for the Green Technology Pilot Program, if the Office determines that the claims are not obviously directed to a single invention. See Instruction Sheet.

3. This request is accompanied by statements of special status for the eligibility requirement.

4. The application contains no more than three (3) independent claims and twenty (20) total claims.

5. The application does not contain any multiple dependent claims.

6. Other attachments: Amendment Transmittal and Preliminary Amendment

| Signature /Peter C. Hsueh/ | Date June 14, 2011 |
|---|---|
| Name (Print/Typed) Peter C. Hsueh | Registration Number 45,574 |

***Note:*** *Signatures of all the inventors or assignees of record of the entire interest or their representative(s) are required in accordance with 37 CFR 1.33 and 11.18. Please see 37 CFR 1.4(d) for the form of the signature. If necessary, submit multiple forms for more than one signature, see below*.*

■ *Total of 3 forms are submitted.

*If you need assistance in completing the form, call 1-800-PTO-9199 and select option 2.*

# Instruction Sheet for
# Petition to Make Special Under the Green Technology Pilot Program

(Not to be Submitted to the USPTO)

***The following is a summary of the requirements (for more information see the notices (i) "Pilot Program for Green Technologies Including Greenhouse Gas Reduction," (ii) "Elimination of Classification Requirement in the Green Technology Pilot Program," and (iii) "Expansion and Extension of the Green Technology Pilot Program," available on the USPTO web site at http://www.uspto.gov/patents/init_events/green_tech.jsp):***

(1) The application must be a non-reissue, non-provisional utility application filed under 35 U.S.C. 111(a), or an international application that has entered the national stage in compliance with 35 U.S.C. 371, irrespective of the filing date of the application. Reexamination proceedings are excluded from this pilot program.

(2) The application must contain three or fewer independent claims and twenty or fewer total claims. The application must not contain any multiple dependent claims. For an application that contains more than three independent claims or twenty total claims, or multiple dependent claims, applicant must file a preliminary amendment in compliance with 37 CFR 1.121 to cancel the excess claims and/or the multiple dependent claims at the time the petition to make special is filed.

(3) The claims must be directed to a single invention that materially enhances the quality of the environment, or that materially contributes to: (1) the discovery or development of renewable energy resources; (2) the more efficient utilization and conservation of energy resources; or (3) green house gas emission reduction (see the eligibility requirements of sections II and III of the notice (i) cited above). The petition must include a statement that, if the USPTO determines that the claims are directed to multiple inventions (e.g., in a restriction requirement), applicant will agree to make an election without traverse in a telephonic interview, and elect an invention that meets the eligibility requirements in section II or III of the notice (i) cited above.

(4) The petition to make special must be timely filed electronically using the USPTO electronic filing system, EFS-Web, and selecting the document description of "Petition for Green Tech Pilot" on the EFS-Web screen. Applicant should use form PTO/SB/420, which is available as a Portable Document Format (PDF) fillable form in EFS-Web and on the USPTO Web site.

(5) The petition to make special must be filed at least one day prior to the date that a first Office action (which may be an Office action containing only a restriction requirement) appears in the Patent Application Information Retrieval (PAIR) system. Applicant may check the status of the application using PAIR.

(6) The petition to make special must be accompanied by a request for early publication in compliance with 37 CFR 1.219 and the publication fee set forth in 37 CFR 1.18(d).

# Privacy Act Statement

The **Privacy Act of 1974 (P.L. 93-579)** requires that you be given certain information in connection with your submission of the attached form related to a patent application or patent. Accordingly, pursuant to the requirements of the Act, please be advised that: (1) the general authority for the collection of this information is 35 U.S.C. 2(b)(2); (2) furnishing of the information solicited is voluntary; and (3) the principal purpose for which the information is used by the U.S. Patent and Trademark Office is to process and/or examine your submission related to a patent application or patent. If you do not furnish the requested information, the U.S. Patent and Trademark Office may not be able to process and/or examine your submission, which may result in termination of proceedings or abandonment of the application or expiration of the patent.

The information provided by you in this form will be subject to the following routine uses:

1. The information on this form will be treated confidentially to the extent allowed under the Freedom of Information Act (5 U.S.C. 552) and the Privacy Act (5 U.S.C 552a). Records from this system of records may be disclosed to the Department of Justice to determine whether disclosure of these records is required by the Freedom of Information Act.
2. A record from this system of records may be disclosed, as a routine use, in the course of presenting evidence to a court, magistrate, or administrative tribunal, including disclosures to opposing counsel in the course of settlement negotiations.
3. A record in this system of records may be disclosed, as a routine use, to a Member of Congress submitting a request involving an individual, to whom the record pertains, when the individual has requested assistance from the Member with respect to the subject matter of the record.
4. A record in this system of records may be disclosed, as a routine use, to a contractor of the Agency having need for the information in order to perform a contract. Recipients of information shall be required to comply with the requirements of the Privacy Act of 1974, as amended, pursuant to 5 U.S.C. 552a(m).
5. A record related to an International Application filed under the Patent Cooperation Treaty in this system of records may be disclosed, as a routine use, to the International Bureau of the World Intellectual Property Organization, pursuant to the Patent Cooperation Treaty.
6. A record in this system of records may be disclosed, as a routine use, to another federal agency for purposes of National Security review (35 U.S.C. 181) and for review pursuant to the Atomic Energy Act (42 U.S.C. 218(c)).
7. A record from this system of records may be disclosed, as a routine use, to the Administrator, General Services, or his/her designee, during an inspection of records conducted by GSA as part of that agency's responsibility to recommend improvements in records management practices and programs, under authority of 44 U.S.C. 2904 and 2906. Such disclosure shall be made in accordance with the GSA regulations governing inspection of records for this purpose, and any other relevant (*i.e.*, GSA or Commerce) directive. Such disclosure shall not be used to make determinations about individuals.
8. A record from this system of records may be disclosed, as a routine use, to the public after either publication of the application pursuant to 35 U.S.C. 122(b) or issuance of a patent pursuant to 35 U.S.C. 151. Further, a record may be disclosed, subject to the limitations of 37 CFR 1.14, as a routine use, to the public if the record was filed in an application which became abandoned or in which the proceedings were terminated and which application is referenced by either a published application, an application open to public inspection or an issued patent.
9. A record from this system of records may be disclosed, as a routine use, to a Federal, State, or local law enforcement agency, if the USPTO becomes aware of a violation or potential violation of law or regulation.

UNITED STATES PATENT AND TRADEMARK OFFICE

UNITED STATES DEPARTMENT OF COMMERCE
United States Patent and Trademark Office
Address: COMMISSIONER FOR PATENTS
P.O. Box 1450
Alexandria, Virginia 22313-1450
www.uspto.gov

| APPLICATION NO. | FILING DATE | FIRST NAMED INVENTOR | ATTORNEY DOCKET NO. | CONFIRMATION NO. |
|---|---|---|---|---|
| 13/011,836 | 01/21/2011 | Chiyoung Lee | 66630/S1170 | 5514 |

23363 7590 07/13/2011
CHRISTIE, PARKER & HALE, LLP
PO BOX 7068
PASADENA, CA 91109-7068

| EXAMINER | |
|---|---|
| DOVE, TRACY MAE | |
| ART UNIT | PAPER NUMBER |
| 1726 | |

| MAIL DATE | DELIVERY MODE |
|---|---|
| 07/13/2011 | PAPER |

**Please find below and/or attached an Office communication concerning this application or proceeding.**

The time period for reply, if any, is set in the attached communication.

UNITED STATES PATENT AND TRADEMARK OFFICE

Commissioner for Patents
United States Patent and Trademark Office
P.O. Box 1450
Alexandria, VA 22313-1450
www.uspto.gov

CHRISTIE, PARKER & HALE, LLP
PO BOX 7068
PASADENA CA 91109-7068

JUL 13 2011

In re Application of :
LEE, CHIYOUNG :
Application No. 13/011,836 :
Filed: 01/21/2011 :
Attorney Docket No. 66630/S1170 :

DECISION ON PETITION
TO MAKE SPECIAL UNDER
THE GREEN TECHNOLOGY
PILOT PROGRAM

This is a decision on the petition under 37 CFR 1.102, filed June 14, 2011, to make the above-identified application special under the pilot program for applications pertaining to Green Technologies as set forth in 74 Federal Register Notice 64666 (December 8, 2009) and amended by 75 Federal Register Notice 28554 (May 21, 2010) and 75 Federal Register Notice 69049 (November 10, 2010).

The petition is **GRANTED**.

A grantable petition to make an application special under 37 CFR 1.102 and the pilot program as set forth in 74 FR 64666 must be directed to a nonprovisional application filed under 35 USC 111(a) or be a national stage entry under 35 USC 371, exclusive of any reissue applications.

In order to qualify for special status, the following requirements must be met. 1) The application must have no more than 3 independent claims and no more than 20 total claims. 2) The application must not contain any multiple dependent claims. 3) The petition must state the basis for seeking special status, i.e., the claimed invention either: A) materially enhances the quality of the environment or B) materially contributes to: i) the discovery or development of renewable energy resources, ii) the more efficient utilization and conservation of energy resources, or iii) greenhouse gas emission reduction. 4) If the disclosure is not clear on its face that the claimed invention materially contributes under category (A) or (B), the petition must be accompanied by a statement by the applicant, assignee, or an attorney/agent registered to practice before the Office explaining how the materiality standard is met. 5) A statement that applicant will agree to make an election without traverse in a telephonic interview if a restriction requirement is made by the examiner. 6) The petition to make special must be filed electronically. 7) The petition must be filed at least one day prior to the date that a first Office Action appears in the Patent Application Information Retrieval (PAIR) system. 8) The petition must be accompanied by a request for early publication in compliance with 37 CFR 1.219 and include the publication fee as set forth in 37 CFR 1.18(d).

The requirement for a fee for consideration of the petition to make special for applications pertaining to Green Technologies has been waived.

The instant petition complies with items 1 – 8 above. Accordingly, the above-identified application has been accorded "special" status.

Telephone inquires concerning this decision should be directed to Tom Dunn at 571-272-1171.

The application is being forwarded to the Technology Center Art Unit 1726 for action on the merits commensurate with this decision.

/Tom Dunn/

Tom Dunn
Quality Assurance Specialist
Technology Center 1700

UNITED STATES PATENT AND TRADEMARK OFFICE

Commissioner for Patents
United States Patent and Trademark Office
P.O. Box 1450
Alexandria, VA 22313-1450
www.uspto.gov

**THOMPSON PATENT LAW OFFICES PC**
**4205 LANCASTER LANE NORTH**
**SUITE 104**
**PLYMOUTH MN 55441**

MAILED

SEP 20 2011

OFFICE OF PETITIONS

In re Application of :
**GRAJCAR**, Zdenko :
Application No. 13/011,927 : DECISION ON PETITION
Filed: January 23, 2011 : TO WITHDRAW
Attorney Docket No. 12-29 : FROM RECORD
:

This is a decision on the Request to Withdraw as attorney or agent under 37 C.F.R. § 1.36(b) or 37 C.F.R. § 10.40 filed September 07, 2011.

The request is **NOT APPROVED**.

A review of the file record indicates that Customer Number 88145 does not have power of attorney in this patent application nor is there any statement or evidence of record of employment in or otherwise being engaged in the proceedings in this patent application. Accordingly, the request to withdraw under 37 C.F.R. § 1.36(b) is not applicable.

All future communications from the Office will continue to be directed to the above-listed address until otherwise properly notified by the applicant.

Telephone inquires concerning this decision should be directed to the undersigned at (571) 272-4231.

Michelle R. Eason
Paralegal Specialist
Office of Petitions

Cc: **ZDENKO GRAJCAR**
**5455 HIGHWAY 169 NORTH**
**PLYMOUTH, MN 55442**

UNITED STATES PATENT AND TRADEMARK OFFICE

Commissioner for Patents
United States Patent and Trademark Office
P.O. Box 1450
Alexandria, VA 22313-1450
www.uspto.gov

MAILED

APR 22 2011

OFFICE OF PETITIONS

BROOKS, CAMERON & HUEBSCH , PLLC
1221 NICOLLET AVENUE, SUITE 500
MINNEAPOLIS MN 55403

In re Application of :
Pekny :
Application No. 13/012,020 : ON PETITION
Deposited: January 24, 2011 :
Docket No. 1000.0080005[07-027601US] :

This is in response to the "PETITION UNDER 37 C.F.R. 1.57(a)" filed March 24, 2011, requesting that the above-referenced application be accorded a filing date of January 24, 2011. This petition is being treated pursuant to 37 CFR 1.53(e)(2)[1].

Application papers in the above-identified application were deposited on January 24, 2011. However, on February 4, 2011, the Office of Patent Application Processing mailed applicant a "Notice of Incomplete Nonprovisional Application," notifying applicant that the application papers had not been accorded a filing date because the application was deposited without drawings. In response, applicant timely filed this petition. Applicant requests that the application be amended to include the inadvertently omitted drawings on the basis that the application as filed contained a prior benefit claim under 37 CFR 1.55 or 1.78.

Petitioner's arguments and evidence have been considered. However, a review of the application confirms that, as filed, the application contained at least one method claim. MPEP 601.01(f) provides that:

> It has been USPTO practice to treat an application that contains at least one process or method claim as an application for which a drawing is not necessary for an understanding of the invention under 35 U.S.C. 113 (first sentence).

Thus, pursuant to § 601.01(f), a drawing is not considered essential for a filing date. The instant application is entitled to a filing date without drawings present in the application.

Accordingly, the Office should have granted the application a filing date and mailed a Notice of Omitted Items instead of a Notice of Incomplete Nonprovisional Application. As stated in MPEP 601.01(g) under the section entitled, "Application Entitled to a Filing Date," applicant

[1] Any request for review of a notification pursuant to paragraph (e)(1) of this section, or a notification that the original application papers lack a portion of the specification or drawing(s), must be by way of a petition pursuant to this paragraph accompanied by the fee set forth in § 1.17(f). In the absence of a timely (§ 1.181(f)) petition pursuant to this paragraph, the filing date of an application in which the applicant was notified of a filing error pursuant to paragraph (e)(1) of this section will be the date the filing error is corrected.

may submit an amendment to include the inadvertently omitted portion of the drawing(s) pursuant to 37 CFR 1.57(a):

> [i]f an application was filed on or after September 21, 2004, and contains a claim under 37 CFR 1.55 for priority of a prior-filed foreign application, or a claim under 37 CFR 1.78 for the benefit of a prior-filed provisional, nonprovisional, or international application that was present on the filing date of the application, and the omitted portion of the drawing(s) was inadvertently omitted from the application and is completely contained in the prior-filed application[.]

Please note that no petition is required and that the amendment must comply with 37 CFR 1.57(a) and 37 CFR 1.121. See MPEP § 201.17. Any amendment to include the inadvertently omitted drawing(s) will be considered by the examiner.

To the extent the instant petition requests a filing date of January 24, 2011 with no drawings present in the application, the petition is **GRANTED**.

Given the basis for granting this petition, the petition fee is being refunded.

Pursuant to this decision, the application will be referred to Office of Patent Application Processing for:

- **correction of the filing date to January 24, 2011**;
- **for indication in Office records, as appropriate, that "0" sheets of drawings were present on filing** and
- **for issuance of a filing receipt.**

Telephone inquiries concerning this matter may be directed to the undersigned at (571) 272-3230.

Shirene Willis Brantley
Senior Petitions Attorney
Office of Petitions

UNITED STATES PATENT AND TRADEMARK OFFICE

Commissioner for Patents
United States Patent and Trademark Office
P.O. Box 1450
Alexandria, VA 22313-1450
www.uspto.gov

SCULLY SCOTT MURPHY &
PRESSER, PC
400 GARDEN CITY PLAZA
SUITE 300
GARDEN CITY NY 11530

MAILED
JAN 17 2012
OFFICE OF PETITIONS

**In re Application of**
**Seigo Kase et al.**
**Application No.: 13/012,051**
**Filed: January 24, 2011**
**Attorney Docket No.: 27200**
**For: Endoscope System**

**: DECISION ON REQUEST TO**
**: PARTICIPATE IN THE PATENT**
**: PROSECUTION HIGHWAY**
**: PROGRAM AND PETITION**
**: TO MAKE SPECIAL UNDER**
**: 37 CFR 1.102(a)**

This is a decision on the request to participate in the Patent Prosecution Highway (PPH) program and the petition under 37 CFR 1.102(a), filed December 7, 2011, to make the above-identified application special.

The request and petition are **GRANTED**.

**Discussion**

A grantable request to participate in the PPH pilot program and petition to make special require:

1. The U.S. application is

    a. a Paris Convention application which either
        i. validly claims priority under 35 U.S.C. 119(a) and 37 CFR 1.55 to one or more applications filed in the JPO, or
        ii. validly claims priority to a PCT application that contains no priority claims, or
    b. a national stage application under the PCT (an application which entered the national stage in the U.S. from a PCT international application after compliance with 35 U.S.C. 371), which PCT application
        i. validly claims priority to an application filed in the JPO, or
        ii. validly claims priority to a PCT application that contains no priority claims, or
        iii. contains no priority claim, or
    c. a so-called bypass application filed under 35 U.S.C. 111(a) which validly claims benefit under 35 U.S.C. 120 to a PCT application, which PCT application
        i. validly claims priority to an application filed in the JPO, or
        ii. validly claims priority to a PCT application that contains no priority claims, or
        iii. contains no priority claim;

2. Applicant must submit a copy of:
    a. The allowable/patentable claim(s) from the JPO application(s);
    b. An English translation of the allowable/patentable claim(s) and
    c. A statement that the English translation is accurate;
3. Applicant must:
    a. Ensure all the claims in the U.S. application must sufficiently correspond or be amended to sufficiently correspond to the allowable/patentable claim(s) in the JPO application(s) and
    b. Submit a claims correspondence table in English;
4. Examination of the U.S. application has not begun;
5. Applicant must submit:
    a. Documentation of prior office action:
        i. a copy of the office action(s) just prior to the "Decision to Grant a Patent" from each of the JPO application(s) containing the allowable/patentable claim(s) or
        ii. if the allowable/patentable claims(s) are from a "Notification of Reasons for Refusal" then the Notification of Reasons for Refusal or
        iii. if the JPO application is a first action allowance then no office action from the JPO is necessary should be indicated on the request/petition form;
    b. An English language translation of the JPO Office action from (5)(a)(i)-(ii) above
    c. A statement that the English translation is accurate;
6. Applicant must submit:
    a. An IDS listing the documents cited by the JPO examiner in the JPO office action (unless already submitted in this application)
    b. Copies of the documents except U.S. patents or U.S. patent application publications (unless already submitted in this application);

The request to participate in the PPH pilot program and petition comply with the above requirements. Accordingly, the above-identified application has been accorded "special" status.

Inquiries concerning this decision should be directed to Kimberly Inabinet at 571-272-4618.

All other inquiries concerning the examination or status of the application is accessible in the PAIR system at http://www.uspto.gov/ebc.index.html.

This application will be forwarded to the examiner for action on the merits commensurate with this decision.

David Bucci
Petitions Examiner
Office of Petitions

UNITED STATES PATENT AND TRADEMARK OFFICE

UNITED STATES DEPARTMENT OF COMMERCE
United States Patent and Trademark Office
Address: COMMISSIONER FOR PATENTS
P.O. Box 1450
Alexandria, Virginia 22313-1450
www.uspto.gov

| APPLICATION NO. | FILING DATE | FIRST NAMED INVENTOR | ATTORNEY DOCKET NO. | CONFIRMATION NO. |
|---|---|---|---|---|
| 13/012,073 | 06/14/2011 | Daisuke ASADA | 27199 | 6043 |

23389 7590 07/20/2011

SCULLY SCOTT MURPHY & PRESSER, PC
400 GARDEN CITY PLAZA
SUITE 300
GARDEN CITY, NY 11530

| EXAMINER | |
|---|---|
| ART UNIT | PAPER NUMBER |
| 3739 | |

| MAIL DATE | DELIVERY MODE |
|---|---|
| 07/20/2011 | PAPER |

**Please find below and/or attached an Office communication concerning this application or proceeding.**

The time period for reply, if any, is set in the attached communication.

UNITED STATES PATENT AND TRADEMARK OFFICE

Commissioner for Patents
United States Patent and Trademark Office
P.O. Box 1450
Alexandria, VA 22313-1450
www.uspto.gov

SCULLY SCOTT MURPHY & PRESSER, PC
400 GARDEN CITY PLAZA
SUITE 300
GARDEN CITY NY 11530

| | | |
|---|---|---|
| In re Application of | : | |
| ASADA, DAISUKE | : | DECISION ON REQUEST TO |
| Application No. 13/012,073 | : | PARTICIPATE IN PATENT |
| Filed: Jan. 24, 2011 | : | PCT/PROSECUTION HIGHWAY |
| Attorney Docket No. 27199 | : | PROGRAM AND PETITION |
| For: MEDICAL APPARATUS | : | TO MAKE SPECIAL UNDER |
| | : | 37 CFR 1.102(a) |

This is a decision on the request to participate in the Patent Prosecution Highway (PPH) program and the petition under 37 CFR 1.102(a), filed July 7, 2011 to make the above-identified application special.

The request and petition are granted.

A grantable request to participate in the PPH pilot program and petition to make special require:

(1) The U.S. application must validly claim priority under 35 U.S.C. 119(a) to one or more applications filed in the JPO;
(2) Applicant must submit a copy of the allowable/patentable claim(s) from the JPO/PCT application(s) along with an English translation thereof and a statement that the English translation is accurate;
(3) All the claims in the U.S. application must sufficiently correspond or be amended to sufficiently correspond to the allowable/patentable claim(s) in the JPO application(s);
(4) Examination of the U.S. application has not begun;
(5) Applicant must submit a copy of all the office actions from each of the JPO/PCT application(s) containing the allowable/patentable claim(s) along with an English translation thereof and a statement that the English translation is accurate; and
(6) Applicant must submit an IDS listing the documents cited by the JPO examiner in the JPO office action along with copies of documents except U.S. patents or U.S. patent application publications.

In light of the petition being properly submitted, the request to participate in the PPH program and the petition comply with the above requirements. Accordingly, the above-identified application has been accorded "special" status.

The applicant is encouraged to cite and submit all relevant prior art references, if any, to facilitate examination in this application. Upon completion of pre-examination processing, this application will be forwarded to an examiner for examination.

Telephone inquiries concerning this decision should be directed to Henry C. Yuen at 571-272-4485. All other inquiries concerning the examination or status of the application should be directed to Linda Dvorak, SPE of Art Unit 3739, and 571-272-4764 for Class 600 and also accessible in the PAIR system at http://www.uspto.gov/ebc.index.html.

Petition is **granted**.

/Henry C. Yuen/

_____

Henry C. Yuen, Special Programs Examiner
Technology Center 3700 – Mechanical Engineering,
Manufacturing and Products
571-272-4856

UNITED STATES PATENT AND TRADEMARK OFFICE

Commissioner for Patents
United States Patent and Trademark Office
P.O. Box 1450
Alexandria, VA 22313-1450
www.uspto.gov

MAILED

SEP 16 2011

OFFICE OF PETITIONS

STRATEGIC PATENTS P.C.
C/O CPA Global
P.O. BOX 52050
MINNEAPOLIS MN 55402

In re Application of :
Eui-Joon Youm :
Application No. 13/012,224 : DECISION REFUSING STATUS
Filed: January 24, 2011 : UNDER 37 CFR 1.47(b)
Attorney Docket No. TTRS-0005-P01 :

This decision is in response to the petition filed September 6, 2011, under 37 CFR 1.47(b), in response to the Notice to File Missing Parts mailed June 17, 2010.

The petition is **DISMISSED**.

Rule 47 applicant is given TWO MONTHS from the mailing date of this decision to respond, correcting the below-noted deficiencies. Any response should be entitled "Request for Reconsideration of Petition Under 37 CFR 1.47(a)" and may include an oath or declaration executed by the inventor. **Failure to respond will result in abandonment of the application.** Any extensions of time will be governed by 37 CFR 1.136(a).

The above-identified application, naming Eui-Joon Youm as the sole inventor, was filed on January 24, 2011 without an executed oath or declaration. Accordingly, on February 7, 2011, a "Notice To File Missing Parts of Nonprovisional Application" was mailed, requiring inter alia an executed oath or declaration and a surcharge for its late filing. In response thereof, the instant petition and five month extension of time is filed with a declaration signed by Robert A. Mazzarese, Patent Attorney for Tetris Online, Inc., and argues that inventor Youm refuses to executed the refuses to participate in the prosecution of the above-referenced application and thus seeks status under 37 CFR 1.47(b).

A grantable petition under 37 CFR 1.47(b) requires:

(1) proof that the non-signing inventor cannot be reached or refuses to sign the oath or declaration after having been presented with the application papers (specification, claims and drawings);

(2) an acceptable oath or declaration in compliance with 35 U.S.C. §§ 115 and 116;

(3) the petition fee;

(4) a statement of the last known address of the non-signing inventor;

(5) proof of proprietary interest, and
(6) proof of irreparable damage.

The petition lacks item (2).

As to item (2), the papers filed with the petition indicate that the invention disclosed in the subject application is assigned to Tetris Online, Inc. Accordingly, the petitioner is not simply a 37 CFR 1.47(b) applicant, but an assignee. Thus, the declaration filed with the instant petition cannot be accepted until the assignee demonstrates that it has the power to prosecute the application. Section 409.03(b) of the *Manual of Patent Examining Procedure* provides, in pertinent part, that, "[w]here the oath or declaration is being signed on behalf of an assignee, see MPEP 324." Section 324 of the Manual of Patent Examining Procedure cites 37 CFR 3.71(c) which states that, "[a]n assignee becomes of record either in a national patent application or a reexamination proceeding by filing a statement in compliance with 3.73(b) that is signed by a party who is authorized to act on behalf of the assignee." Petitioner should note that 37 CFR3.73 requires that before an assignee can take action in a patent matter, the assignee must establish ownership of the patent property in accordance with 37 CFR 3.73(b)(1)(i) or (ii). No statement or certificate meeting the requirements of 37 CFR 3.73 was found with the petition. Petitioner must properly establish ownership of the patent property before the assignee will be granted authority under 37CFR 1.47(b) to prosecute the application.

Petitioner is directed to Form PTO/SB/96.

Further correspondence with respect to this matter should be addressed as follows:

By mail: Mail Stop Petition
Commissioner for Patents
P.O. Box 1450
Alexandria, VA 22313-1450

By FAX: (571) 273-8300

Telephone inquiries concerning this matter may be directed to the undersigned Petitions Attorney at (571) 272-3212.

Patricia Faison-Ball

Patricia Faison-Ball
Senior Petitions Attorney
Office of Petitions

UNITED STATES PATENT AND TRADEMARK OFFICE

Commissioner for Patents
United States Patent and Trademark Office
P.O. Box 1450
Alexandria, VA 22313-1450
www.uspto.gov

STRATEGIC PATENTS P.C.
C/O CPA Global
P.O. BOX 52050
MINNEAPOLIS MN 55402

MAILED
OCT 07 2011
OFFICE OF PETITIONS

In re Application of :
Eui-Joon Youm :
Application No. 13/012,224 : DECISION ACCORDING STATUS
Filed: January 24, 2011 : UNDER 37 CFR 1.47(b)
Attorney Docket No. TTRS-0005-P01 :

This decision is in response to the RENEWED PETITION UNDER 37 CFR §1.47(b) filed September 20, 2011.[1]

The petition is **GRANTED**,

The above-identified application, naming Eui-Joon Youm as the sole inventor, was filed on January 24, 2011 without an executed oath or declaration. Accordingly, on February 7, 2011, a "Notice To File Missing Parts of Nonprovisional Application" was mailed, requiring inter alia an executed oath or declaration and a surcharge for its late filing. In response thereof, on September 6, 2011, a petition under 37 CFR §1.47(b) and a five month extension of time was filed with a declaration signed by Robert A. Mazzarese, Patent Attorney for Tetris Online, Inc., and argued that inventor Youm refused to participate in the prosecution of the above-referenced application and thus, sought status under 37 CFR 1.47(b).

The petition was dismissed in a decision mailed September 16, 2011 because the assignee had not established its right to take action in accordance with 37 CFR 3.73(b).

---

[1] A grantable petition under 37 CFR 1.47(b) requires:
(1) proof that the non-signing inventor cannot be reached or refuses to sign the oath or declaration after having been presented with the application papers (specification, claims and drawings);
(2) an acceptable oath or declaration in compliance with 35 U.S.C. §§ 115 and 116;
(3) the petition fee;
(4) a statement of the last known address of the non-signing inventor;
(5) proof of proprietary interest, and
(6) proof of irreparable damage.

In response thereof, petitioner has filed a statement under 37 CFR 3.73(b).

All requirements under 37 CFR 1.47(b) therefore having been met, as provided in Rule 1.47( c), this Office will forward notice of this application's filing to the non-signing inventor at the address given in the petition. Notice of the filing of this application will also be published in the Official Gazette.

This matter is being referred to the Office of Patent Application Processing for further pre-examination processing.

Telephone inquiries related to this decision should be directed to the undersigned Petitions Attorney at (571) 272-3212.

Patricia Faison-Ball
Senior Petitions Attorney
Office of Petitions

UNITED STATES PATENT AND TRADEMARK OFFICE

Commissioner for Patents
United States Patent and Trademark Office
P.O. Box 1450
Alexandria, VA 22313-1450
www.uspto.gov

**COOLEY LLP**
**ATTN: Patent Group**
**Suite 1100**
**777 - 6th Street, NW**
**WASHINGTON DC 20001**

MAILED

JUN 14 2011

OFFICE OF PETITIONS

In re Application of :
Cynthia K. Bruno :
Application No. 13/012,312 :
Filed: January 24, 2011 :
Attorney Docket No. AEQU-001/02US :
307439-2004

DECISION ON PETITION
TO WITHDRAW
FROM RECORD

This is a decision on the request to withdraw as attorney of record under 37 CFR § 1.36, filed May 10, 2011.

The request is **NOT APPROVED**.

The request cannot be approved because it lacks a forwarding correspondence address of the first named inventor or a properly intervening assignee.

If the forwarding correspondence address is to the assignee, the Office will only accept correspondence address changes to the most current address information provided for the assignee of the entire interest *that properly became of record under 37 CFR 3.71.* 37 CFR 3.71(c) states:

> *An assignee becomes of record either in a national patent application or a reexamination proceeding by filing a statement in compliance with § 3.73(b) that is signed by a party who is authorized to act on behalf of the assignee.*

The assignee must establish its ownership of the patent to the satisfaction of the Director. In this regard, the statement under 37 CFR 3.73(b) must have either: (i) documentary evidence of a chain of title from the original owner to the assignee (*e.g.*, copy of an executed assignment), and a statement affirming that the documentary evidence of the chain of title from the original owner to the assignee was or concurrently is being submitted for recordation pursuant to § 3.11; or (ii) a statement specifying where documentary evidence of a chain of title from the original owner to the assignee is recorded in the assignment records of the Office (*e.g.*, reel and frame number).

All future communications from the Office will continue to be directed to the above-listed address until otherwise notified by applicant.

Telephone inquires concerning this decision should be directed to the undersigned at (571) 272-2991.

Terri Johnson
Petitions Examiner
Office of Petitions

cc: **Aequor, Inc.**
**Attn: K&L Gates**
**925 Fourth Avenue, Suite 2900**
**Seattle, WA 98104**

**IN THE UNITED STATES PATENT AND TRADEMARK OFFICE**

| | | | |
|---|---|---|---|
| APPLICANTS: | McBride *et al.* | | |
| SERIAL NO.: | Not yet assigned | GROUP NO.: | Not yet assigned |
| FILING DATE: | Herewith | EXAMINER: | Not yet assigned |
| TITLE: | SYSTEM AND METHODS FOR ENERGY STORAGE AND RECOVERY USING COMPRESSED GAS | | |

Commissioner for Patents
P.O. Box 1450
Alexandria, VA 22313-1450

**STATEMENTS OF SPECIAL STATUS AND MATERIALITY IN SUPPORT OF PETITION TO MAKE SPECIAL UNDER THE GREEN TECHNOLOGY PILOT PROGRAM**

In accordance with the Federal Register notices published December 8, 2009, May 21, 2010, and November 10, 2010, Applicants hereby request to participate in the Green Technology Pilot Program for the above-identified application. Applicants submit that the invention claimed in the above-identified application materially contributes to the development of renewable energy resources and the conservation of energy resources at least because the invention solves a persistent problem with intermittent energy-generation systems (e.g., wind and solar renewable energy) by providing systems for storing and recovering the energy from these sources, thereby making them deployable on a widespread and practical basis. Thus, the claimed invention directly contributes to the conservation of energy resources by enabling the replacement of fossil-fuel-dependent energy sources with renewable energy sources.

Specifically, the claimed energy storage and generation system features a cylinder for compressing gas to store energy and expanding gas to impart energy, as well as a control system for controlling operation of the cylinder. The control system enforces substantially isothermal expansion and compression of the gas, thereby increasing efficiency of the clean energy storage and recovery. When this simple and compact system is coupled to renewable energy sources (e.g., wind turbines or solar cells), it stores the energy produced thereby in the form of compressed gas. Then, during periods of high power demand and/or periods when the wind

turbine or solar cell is not producing energy (e.g., periods of calm or night), the compressed-gas energy may be utilized to produce electricity and satisfy demand.

In addition, the claimed invention assists in the conservation of energy and reduction of greenhouse-gas emissions by eliminating energy waste due to fluctuations in power demand. The claimed invention eliminates the need for rapidly-deployable gas turbines or generators that require the use of non-renewable energy resources (e.g., natural gas and diesel fuel) and are environmentally damaging due to their inherent noise and emissions. Instead, the claimed systems may be utilized to service fluctuating power demand without concomitant fossil-fuel use or greenhouse-gas emission.

Applicants believe no additional fees are necessitated by the filing of this paper. However, if any additional fee is due, please charge said fee occasioned by this paper to our Deposit Account No. 50-4047.

Respectfully submitted,

Date: January 24, 2011
Reg. No. 58,533

Electronic Signature: /Matthew T. Currie/
Matthew T. Currie
Attorney for Applicants
Bingham McCutchen LLP
One Federal Street
Boston, Massachusetts 02110

Tel. No.: (617) 951-8293
Fax No.: (617) 951-8736

**Doc Code: PET.GREEN**
**Document Description: Petition for Green Tech Pilot**

PTO/SB/420 (05-10)
Approved for use through 05/31/2010. OMB 0651-0062
U.S. Patent and Trademark Office; U.S. DEPARTMENT OF COMMERCE
Under the Paperwork Reduction Act of 1995, no persons are required to respond to a collection of information unless it displays a valid OMB control number.

# PETITION TO MAKE SPECIAL UNDER THE GREEN TECHNOLOGY PILOT PROGRAM

| Attorney Docket Number: | SUS-001C2 | Application Number (if known): | Filing date: Herewith |
|---|---|---|---|
| First Named Inventor: | Troy O. McBride | | |
| Title: | SYSTEMS AND METHODS FOR ENERGY STORAGE AND RECOVERY USING COMPRESSED GAS | | |

**APPLICANT HEREBY REQUESTS TO PARTICIPATE IN THE GREEN TECHNOLOGY PILOT PROGRAM FOR THE ABOVE-IDENTIFIED APPLICATION. See Instruction Sheet on page 2.**

This petition must be timely filed electronically using the USPTO electronic filing system, EFS-Web.

1. By filing this petition:

   **Applicant is requesting early publication: Applicant hereby requests early publication under 37 CFR 1.219 and the publication fee set forth in 37 CFR 1.18(d) accompanies this request.**

2. By filing this petition: applicant is agreeing to make an election without traverse in a telephonic interview and elect an invention that meets the eligibility requirements set forth in the notice titled "Pilot Program for Green Technologies Including Greenhouse Gas Reduction," as modified by the notice titled "Elimination of Classification Requirement in the Green Technology Pilot Program," each of which was published in the Federal Register, if the Office determines that the claims are not obviously directed to a single invention.

3. This request is accompanied by statements of special status for the eligibility requirement.

4. The application contains no more than three (3) independent claims and twenty (20) total claims.

5. The application does not contain any multiple dependent claims

6. Other attachments: Preliminary Amendment
   Statement of Special Status

| Signature | /Matthew T. Currie/ | Date | January 24, 2011 |
|---|---|---|---|
| Name (Print/Typed) | Matthew T. Currie | Registration Number | 58,533 |

***Note**: Signatures of all the inventors or assignees of record of the entire interest or their representative(s) are required in accordance with 37 CFR 1.33 and 11.18. Please see 37 CFR 1.4(d) for the form of the signature. If necessary, submit multiple forms if more than one signature, see below*.*

☐ *Total of 1 forms are submitted.

UNITED STATES PATENT AND TRADEMARK OFFICE

UNITED STATES DEPARTMENT OF COMMERCE
United States Patent and Trademark Office
Address: COMMISSIONER FOR PATENTS
P.O. Box 1450
Alexandria, Virginia 22313-1450
www.uspto.gov

| APPLICATION NO. | FILING DATE | FIRST NAMED INVENTOR | ATTORNEY DOCKET NO. | CONFIRMATION NO. |
|---|---|---|---|---|
| 13/012,323 | 01/24/2011 | Troy O. McBride | SUS-001C2/7300653003 | 6535 |

23517 7590 04/04/2011

BINGHAM MCCUTCHEN LLP
2020 K Street, N.W.
Intellectual Property Department
WASHINGTON, DC 20006

| EXAMINER | |
|---|---|
| ART UNIT | PAPER NUMBER |
| 3746 | |

| MAIL DATE | DELIVERY MODE |
|---|---|
| 04/04/2011 | PAPER |

**Please find below and/or attached an Office communication concerning this application or proceeding.**

The time period for reply, if any, is set in the attached communication.

UNITED STATES PATENT AND TRADEMARK OFFICE

Commissioner for Patents
United States Patent and Trademark Office
P.O. Box 1450
Alexandria, VA 22313-1450
www.uspto.gov

BINGHAM MCCUTCHEN LLP
2020 K Street, N.W.
Intellectual Property Department
WASHINGTON DC 20006

| | | |
|---|---|---|
| In re Application of | : | |
| MCBRIDE, TROY O. et al | : | DECISION ON PETITION |
| Application No. 13/012,323 | : | TO MAKE SPECIAL UNDER |
| Filed: Jan. 24, 2011 | : | THE GREEN TECHNOLOGY |
| Attorney Docket No. 81171228 (FGTI-138PUS) | : | PILOT PROGRAM |

This is a decision on the petition under 37 CFR 1.102, filed Jan. 24, 2011, to make the above-identified application special under the pilot program for applications pertaining to Green Technologies as set forth in 74 Federal Register Notice 64666 (December 8, 2009) and amended by 75 Federal Register Notice 28554 (May 21, 2010) and 75 Federal Register Notice 69049 (November 10, 2010).

The petition is granted.

If reconsideration of this decision is desired, a petition for reconsideration must be filed within ONE (1) MONTH OR THIRTY (30) DAYS from the mail date of this decision, whichever is longer. No extension of this time limit can be granted under 37 CFR 1.136(a) or (b). The petition for reconsideration should include an exhaustive attempt to provide the lacking item(s) noted below, since, after a decision on the petition for reconsideration, no further reconsideration or review of the matter will be undertaken by the Director.

A grantable petition to make an application special under 37 CFR 1.102 and the pilot program as set forth in 74 FR 64666 must be directed to a nonprovisional application filed under 35 USC 111(a) or be a national stage entry under 35 USC 371, exclusive of any reissue applications.

In order to qualify for special status, the following requirements must be met. 1) The application must have no more than 3 independent claims and no more than 20 total claims. 2) The application must not contain any multiple dependent claims. 3) The petition must state the basis for seeking special status, i.e., the claimed invention either: A) materially enhances the quality of the environment or B) materially contributes to: i) the discovery or development of renewable energy resources, ii) the more efficient utilization and conservation of energy resources, or iii)

greenhouse gas emission reduction. 4) If the disclosure is not clear on its face that the claimed invention materially contributes under category (A) or (B), the petition must be accompanied by a statement by the applicant, assignee, or an attorney/agent registered to practice before the Office explaining how the materiality standard is met. 5) A statement that applicant will agree to make an election without traverse in a telephonic interview if a restriction requirement is made by the examiner. 6) The petition to make special must be filed electronically. 7) The petition must be filed at least one day prior to the date that a first Office Action appears in the Patent Application Information Retrieval (PAIR) system. 8) The petition must be accompanied by a request for early publication in compliance with 37 CFR 1.219 and include the publication fee as set forth in 37 CFR 1.18(d). The requirement for a fee for consideration of the petition to make special for applications pertaining to Green Technologies has been waived.

The instant petition complies with items 1 – 8 above. Accordingly, the above-identified application has been accorded "special" status.

Telephone inquires concerning this decision should be directed to Henry C. Yuen at 571-272-4856.

This application is undergoing pre-examination processing and will be forwarded to the Technology Center Art Unit 3746 for action on the merits commensurate with this decision.

/Henry C. Yuen/

Henry C. Yuen
Quality Assurance Specialist
Technology Center TC 3700

UNITED STATES PATENT AND TRADEMARK OFFICE

UNITED STATES DEPARTMENT OF COMMERCE
United States Patent and Trademark Office
Address: COMMISSIONER FOR PATENTS
P.O. Box 1450
Alexandria, Virginia 22313-1450
www.uspto.gov

| APPLICATION NO. | FILING DATE | FIRST NAMED INVENTOR | ATTORNEY DOCKET NO. | CONFIRMATION NO. |
|---|---|---|---|---|
| 13/012,347 | 01/24/2011 | Giuseppe CAPUTO | SIB-001C | 6577 |

26868 7590 09/16/2011

Hasse & Nesbitt LLC
8837 Chapel Square Drive
Suite C
CINCINNATI, OH 45249

| EXAMINER | |
|---|---|
| KOSACK, JOSEPH R | |
| ART UNIT | PAPER NUMBER |
| 1626 | |

| MAIL DATE | DELIVERY MODE |
|---|---|
| 09/16/2011 | PAPER |

**Please find below and/or attached an Office communication concerning this application or proceeding.**

The time period for reply, if any, is set in the attached communication.

UNITED STATES PATENT AND TRADEMARK OFFICE

Commissioner for Patents
United States Patent and Trademark Office
P.O. Box 1450
Alexandria, VA 22313-1450
www.uspto.gov

Hasse & Nesbitt LLC
8837 Chapel Square Drive
Suite C
CINCINNATI OH 45249

Applicant: Caputo
Appl. No.: 13/012,347
Filing Date: January 24, 2011
Title: CYANINE-TYPE COMPOUNDS HAVING AN ALKYNYL LINKER ARM
Attorney Docket No.: SIB-001C
Pub. No.: US 2011/0118438 A1
Pub. Date: May 19, 2011

This is a decision on the request for republication of patent application publication under 37 CFR 1.221(a), filed on August 25, 2011, for the above-identified application.

The request under 37 CFR 1.221(a) is DISMISSED.

37 CFR 1.221(a) requires "a copy of the application in compliance with the Office electronic filing system requirements and be accompanied by the publication fee set forth in § 1.18(d) and the processing fee set forth in § 1.17(i)". If the request for republication does not comply with the electronic filing system requirements, the republication will not take place and the publication fee set forth in § 1.18(d) will be refunded. The processing fee will be retained.

The applicant did not supply a copy of the application in compliance with the Office electronic filing system, as required by 37 CFR 1.221(a) because **the applicant submitted the papers as a "Document for an existing application", which are entered into the application file, and not as a "Pre-Grant Publication" submission**. In addition, the applicant did not provide a complete copy of the application papers for publication purposes. The request for republication does not comply with the electronic filing system requirements, thus republication will not take place.

Any request for republication under 37 CFR 1.221(a), must be submitted via the EFS system, as a Pre-Grant publication submission and must include a copy of the application in compliance with the Office electronic filing system requirements. The applicant is directed to the following

website for additional instructions on how to submit a Pre-Grant Publication submission via the electronic filing system:

http://www.uspto.gov/ebc/portal/efs/pgpub_quickstart.pdf

Any questions or requests for reconsideration of the decision should be addressed as follows:

By mail to: Mail Stop PGPUB
Commissioner for Patents
P.O. Box 1450
Alexandria, Va. 22313-1450

By facsimile: 571-273-8300

Telephone inquiries regarding this correspondence should be directed to The Office of Data Management at 571-272-4200.

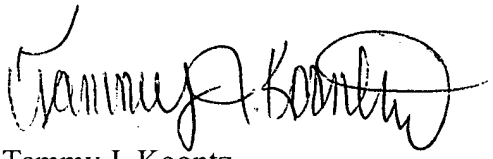

Tammy J. Koontz
Office of Data Management
United States Patent & Trademark Office

UNITED STATES PATENT AND TRADEMARK OFFICE

Commissioner for Patents
United States Patent and Trademark Office
P.O. Box 1450
Alexandria, VA 22313-1450
www.uspto.gov

In re Application of
Dwight C. OLSON

Application No. 13012415

Filed:

Attorney Docket No. 30683UX

:
:
:DECISION ON PETITION TO MAKE SPECIAL
:UNDER 37 CFR 1.102(c)(1)
:

This is a decision on the electronic petition under 37 CFR 1.102 (c)(1), filed 26-JAN-2011 to make the above-identified application special based on applicant's age as set forth in MPEP § 708.02, Section IV.

The petition is **GRANTED**.

A grantable petition to make an application special under 37 CFR 1.102(c)(1), MPEP § 708.02, Section IV: Applicant's Age must include a statement by applicant or a registered practitioner having evidence that applicant is at least 65 years of age. No fee is required.

Accordingly, the above-identified application has been accorded "special" status and will be taken up for action by the examiner upon the completion of all pre-examination processing.

Telephone inquiries concerning this electronic decision should be directed to the Electronic Business Center at 866-217-9197.

All other inquiries concerning either the examination or status of the application should be directed to the Technology Center.

Doc code : PET.OP.AGE
Description : Petition to make special based on Age/Health

PTO/SB/130 (07-09)
Approved for use through 07/31/2012. OMB 0651- 0031
U.S. Patent and Trademark Office; U.S. DEPARTMENT OF COMMERCE
Under the Paperwork Reduction Act of 1995, no persons are required to respond to a collection of information unless it contains a valid OMB control number

## PETITION TO MAKE SPECIAL BASED ON AGE FOR ADVANCEMENT OF EXAMINATION UNDER 37 CFR 1.102(c)(1)

### Application Information

| | | | | | |
|---|---|---|---|---|---|
| Application Number | 13012415 | Confirmation Number | 6730 | Filing Date | 2011-01-24 |
| Attorney Docket Number (optional) | 30683UX | Art Unit | TBD | Examiner | TBD |
| First Named Inventor | Dwight C. OLSON | | | | |
| Title of Invention | A GPS NAVIGATOR | | | | |

**Attention: Office of Petitions**
An application may be made special for advancement of examination upon filing of a petition showing that the applicant is 65 years of age, or more. No fee is required with such a petition. See 37 CFR 1.102(c)(1) and MPEP 708.02 (IV).

APPLICANT HEREBY PETITIONS TO MAKE SPECIAL FOR ADVANCEMENT OF EXAMINATION IN THIS APPLICATION UNDER 37 CFR 1.102(c)(1) and MPEP 708.02 (IV) ON THE BASIS OF THE APPLICANT'S AGE.

A grantable petition requires one of the following items:
(1) Statement by one named inventor in the application that he/she is 65 years of age, or more; or
(2) Certification by a registered attorney/agent having evidence such as a birth certificate, passport, driver's license, etc. showing one named inventor in the application is 65 years of age, or more.

**Name of Inventor who is 65 years of age, or older**

| Given Name | Middle Name | Family Name | Suffix |
|---|---|---|---|
| Gary | Marvin | NATH | |

A signature of the applicant or representative is required in accordance with 37 CFR 1.33 and 10.18.
Please see 37 CFR 1.4(d) for the format of the signature.

Select (1) or (2) :

○ (1) I am an inventor in this application and I am 65 years of age, or more.

◉ (2) I am an attorney or agent registered to practice before the Patent and Trademark Office, and I certify that I am in possession of evidence, and will retain such in the application file record, showing that the inventor listed above is 65 years of age, or more.

| | | | |
|---|---|---|---|
| Signature | /Jerald L. Meyer/ | Date (YYYY-MM-DD) | 2011-01-26 |
| Name | Jerald L. Meyer | Registration Number | 41194 |

PTO/SB/130 (07-09)
Approved for use through 07/31/2012. OMB 0651- 0031
U.S. Patent and Trademark Office; U.S. DEPARTMENT OF COMMERCE
Under the Paperwork Reduction Act of 1995, no persons are required to respond to a collection of information unless it contains a valid OMB control number

# Privacy Act Statement

The Privacy Act of 1974 (P.L. 93-579) requires that you be given certain information in connection with your submission of the attached form related to a patent application or patent. Accordingly, pursuant to the requirements of the Act, please be advised that: (1) the general authority for the collection of this information is 35 U.S.C. 2(b)(2); (2) furnishing of the information solicited is voluntary; and (3) the principal purpose for which the information is used by the U.S. Patent and Trademark Office is to process and/or examine your submission related to a patent application or patent. If you do not furnish the requested information, the U.S. Patent and Trademark Office may not be able to process and/or examine your submission, which may result in termination of proceedings or abandonment of the application or expiration of the patent.

The information provided by you in this form will be subject to the following routine uses:

1. The information on this form will be treated confidentially to the extent allowed under the Freedom of Information Act (5 U.S.C. 552) and the Privacy Act (5 U.S.C. 552a). Records from this system of records may be disclosed to the Department of Justice to determine whether the Fr eedom of Information Act requires disclosure of these records.

2. A record from this system of records may be disclosed, as a routine use, in the course of presenting evidence to a court, magistrate, or administrative tribunal, including disclosures to opposing counsel in the course of settlement negotiations.

3. A record in this system of records may be disclosed, as a routine use, to a Member of Congress submitting a request involving an individual, to whom the record pertains, when the individual has requested assistance from the Member with respect to the subject matter of the record.

4. A record in this system of records may be disclosed, as a routine use, to a contractor of the Agency having need for the information in order to perform a contract. Recipients of information shall be required to comply with the requirements of the Privacy Act of 1974, as amended, pursuant to 5 U.S.C. 552a(m).

5. A record related to an International Application filed under the Patent Cooperation Treaty in this system of records may be disclosed, as a routine use, to the International Bureau of the World Intellectual Property Organization, pursuant to the Patent Cooperation Treaty.

6. A record in this system of records may be disclosed, as a routine use, to another federal agency for purposes of National Security review (35 U.S.C. 181) and for review pursuant to the Atomic Energy Act (42 U.S.C. 218(c)).

7. A record from this system of records may be disclosed, as a routine use, to the Administrator, General Services, or his/her designee, during an inspection of records conducted by GSA as part of that agency's responsibility to recommend improvements in records management practices and programs, under authority of 44 U.S.C. 2904 and 2906. Such disclosure shall be made in accordance with the GSA regulations governing inspection of records for this purpose, and any other relevant (i.e., GSA or Commerce) directive. Such disclosure shall not be used to make determinations about indivi duals.

8. A record from this system of records may be disclosed, as a routine use, to the public after either publication of the application pursuant to 35 U.S.C. 122(b) or issuance of a patent pursuant to 35 U.S.C. 151. Further, a record may be disclosed, subject to the limitations of 37 CFR 1.14, as a routine use, to the public if the record was filed in an application which became abandoned or in which the proceedings were terminated and which application is referenced by either a published application, an application open to public inspections or an issued patent.

9. A record from this system of records may be disclosed, as a routine use, to a Federal, State, or local law enforcement agency, if the USPTO becomes aware of a violation or potential violation of law or regulation.

UNITED STATES PATENT AND TRADEMARK OFFICE

Commissioner for Patents
United States Patent and Trademark Office
P.O. Box 1450
Alexandria, VA 22313-1450
www.uspto.gov

**WESTERMAN, HATTORI, DANIELS & ADRIAN, LLP**
**1250 CONNECTICUT AVENUE, NW**
**SUITE 700**
**WASHINGTON, DC 20036**

MAILED

JUL 06 2011

OFFICE OF PETITIONS

In re Application of :
Suzuki et al. :
Application No. 13/012,418 : DECISION ON PETITION
Filed: January 24, 2011 :
Attorney Docket No. 110069 :

This is a decision on the petition under 37 CFR 1.182, filed, April 8, 2011, to change the name of inventor "Sayoko IKEDA" to – Sayoko TOMINAGA –.

The petition is **DISMISSED**.

The petition under 37 CFR 1.182 to change the name of an inventor in the above indentified application is unnecessary since the inventor, Sayoko Tominaga's name change occurred on June 22, 2008 which was prior to the filing of the instant application. The correct name of Sayoko Tominaga is reflected on the filing receipt dated February 9, 2011.

In view of the above, the petition herein is unnecessary and the requisite petition fee of $400 will not be charged to petitioner's deposit account.

Any questions concerning this matter may be directed to Alicia Kelley-Collier at (571) 272-6059. Any questions concerning the examination procedures or status of the application should be directed to the Technology Center.

/Carl Friedman/
Carl Friedman
Petitions Examiner
Office of Petitions

**Doc Code: PET.GREEN**
**Document Description: Petition for Green Tech Pilot**

PTO/SB/420 (05-10)
Approved for use through 05/31/2010. OMB 0651-0062
U.S. Patent and Trademark Office; U. S. DEPARTMENT OF COMMERCE
Under the Paperwork Reduction Act of 1995, no persons are required to respond to a collection of information unless it displays a valid OMB control number.

# PETITION TO MAKE SPECIAL UNDER THE GREEN TECHNOLOGY PILOT PROGRAM

| Attorney Docket Number: 1630-0903PUS1 | Application Number (if known): 13/012,428 | Filing date: January 24, 2011 |
|---|---|---|
| First Named Inventor: Suntae HWANG | | |
| Title: SILICON THIN FILM SOLAR CELL | | |

**APPLICANT HEREBY REQUESTS TO PARTICIPATE IN THE GREEN TECHNOLOGY PILOT PROGRAM FOR THE ABOVE-IDENTIFIED APPLICATION. See Instruction Sheet on page 2.**

This petition must be timely filed electronically using the USPTO electronic filing system, EFS-Web.

1. By filing this petition:

   **Applicant is requesting early publication: Applicant hereby requests early publication under 37 CFR 1.219 and the publication fee set forth in 37 CFR 1.18(d) accompanies this request.**

2. By filing this petition: applicant is agreeing to make an election without traverse in a telephonic interview and elect an invention that meets the eligibility requirements set forth in the notice titled "Pilot Program for Green Technologies Including Greenhouse Gas Reduction," as modified by the notice titled "Elimination of Classification Requirement in the Green Technology Pilot Program," each of which was published in the Federal Register, if the Office determines that the claims are not obviously directed to a single invention.

3. This request is accompanied by statements of special status for the eligibility requirement.

4. The application contains no more than three (3) independent claims and twenty (20) total claims.

5. The application does not contain any multiple dependent claims.

6. Other attachments: _____

| Signature | Date FEB 14 2011 |
|---|---|
| Name (Print/Typed) Esther H. Chong | Registration Number 40,953 |

***Note:*** *Signatures of all the inventors or assignees of record of the entire interest or their representative(s) are required in accordance with 37 CFR 1.33 and 11.18. Please see 37 CFR 1.4(d) for the form of the signature. If necessary, submit multiple forms for more than one signature, see below*.*

☐ *Total of _____ forms are submitted.

The information is required to obtain or retain a benefit by the public which is to file (and by the USPTO to process) an application. Confidentiality is governed by 35 U.S.C. 122 and 37 CFR 1.11 and 1.14. This collection is estimated to take 12 hours to complete, including gathering, preparing, and submitting the completed application form to the USPTO. Time will vary depending upon the individual case. Any comments on the amount of time you require to complete this form and/or suggestions for reducing this burden, should be sent to the Chief Information Officer, U.S. Patent and Trademark Office, U.S. Department of Commerce, P.O. Box 1450, Alexandria, VA 22313-1450. DO NOT SEND FEES OR COMPLETED FORMS TO THIS ADDRESS. **SEND TO: Commissioner for Patents, P.O. Box 1450, Alexandria, VA 22313-1450.**

*If you need assistance in completing the form, call 1-800-PTO-9199 and select option 2.*

Docket No.: 1630-0903PUS1
(Patent)

**IN THE UNITED STATES PATENT AND TRADEMARK OFFICE**

Patent Application of:
Suntae HWANG et al.

| | | | |
|---|---|---|---|
| Application No.: | 13/012,428 | Confirmation No.: | 6764 |
| Filed: | January 24, 2011 | Art Unit: | 1725 |
| For: | SILICON THIN FILM SOLAR CELL | Examiner: | Not Yet Assigned |

**STATEMENT OF SPECIAL STATUS FOR THE ELIGIBILITY REQUIREMENT UNDER THE GREEN TECHNOLOGY PILOT PROGRAM**

Commissioner for Patents
P.O. Box 1450
Alexandria, VA 22313-1450

Sir:

In support of the Petition to Make Special Under the Green Technology Pilot Program, it is respectfully submitted that the basis for the requested special status is that the invention claimed in the above-identified patent application materially contributes to the development of renewable energy sources and/or green house gas emission reduction. Specifically, the claimed invention relates to a solar cell.

Additionally, by filing this petition, the applicant agrees to make an election without traverse in a telephone interview and elect an invention that meets the eligibility requirements set for in the notice titled "Pilot Program for Green Technologies Including Greenhouse Gas Reduction," as modified by the notice titled "Elimination of Classification Requirement in the Green Technology Pilot Program," each of which was published in the Federal Register, if the Office determines that the claims are not obviously directed to a single invention.

It is also submitted that this application meets the eligibility requirements to participate in the Green Technology Pilot Program, as listed in the attached Petition to Make Special Under the Green Technology Pilot Program.

Accordingly, it is respectfully requested that the Petition be granted.

Should there be any outstanding matters that need to be resolved in the present application, the Examiner is respectfully requested to contact Seth S. Kim, Reg. No. 54,577, at the telephone number of the undersigned below to conduct an interview in an effort to expedite prosecution in connection with the present application.

If necessary, the Director is hereby authorized in this, concurrent, and future replies to charge any fees required during the pendency of the above-identified application or credit any overpayment to Deposit Account No. 02-2448.

Dated: FEB 14 2011

Respectfully submitted,

By _____

Esther H. Chong
Registration No.: 40953
BIRCH, STEWART, KOLASCH & BIRCH, LLP
8110 Gatehouse Road, Suite 100 East
P.O. Box 747
Falls Church, VA 22040-0747
703-205-8000

UNITED STATES PATENT AND TRADEMARK OFFICE

UNITED STATES DEPARTMENT OF COMMERCE
United States Patent and Trademark Office
Address: COMMISSIONER FOR PATENTS
P.O. Box 1450
Alexandria, Virginia 22313-1450
www.uspto.gov

| APPLICATION NO. | FILING DATE | FIRST NAMED INVENTOR | ATTORNEY DOCKET NO. | CONFIRMATION NO. |
|---|---|---|---|---|
| 13/012,428 | 01/24/2011 | Suntae HWANG | 1630-0903PUS1 | 6764 |

2292 7590 03/15/2011
BIRCH STEWART KOLASCH & BIRCH
PO BOX 747
FALLS CHURCH, VA 22040-0747

| EXAMINER | |
|---|---|
| ART UNIT | PAPER NUMBER |
| 1725 | |

| NOTIFICATION DATE | DELIVERY MODE |
|---|---|
| 03/15/2011 | ELECTRONIC |

**Please find below and/or attached an Office communication concerning this application or proceeding.**

The time period for reply, if any, is set in the attached communication.

Notice of the Office communication was sent electronically on above-indicated "Notification Date" to the following e-mail address(es):

mailroom@bskb.com

UNITED STATES PATENT AND TRADEMARK OFFICE

Commissioner for Patents
United States Patent and Trademark Office
P.O. Box 1450
Alexandria, VA 22313-1450
www.uspto.gov

BIRCH STEWART KOLASCH & BIRCH
PO BOX 747
FALLS CHURCH VA 22040-0747

3/15/2011

| | | |
|---|---|---|
| In re Application of | : | |
| Hwang et al. | : | DECISION ON PETITION |
| Application No. 13/012,428 | : | TO MAKE SPECIAL UNDER |
| Filed: 1/24/2011 | : | THE GREEN TECHNOLOGY |
| Attorney Docket No. **1630-0903PUS1** | : | PILOT PROGRAM |

This is a decision on the petition under 37 CFR 1.102, filed 2/14/2011, to make the above-identified application special under the pilot program for applications pertaining to Green Technologies as set forth in 74 Federal Register Notice 64666 (December 8, 2009) and amended by 75 Federal Register Notice 28554 (May 21, 2010) and 75 Federal Register Notice 69049 (November 10, 2010).

The petition is **GRANTED**.

A grantable petition to make an application special under 37 CFR 1.102 and the pilot program as set forth in 74 FR 64666 must be directed to a nonprovisional application filed under 35 USC 111(a) or be a national stage entry under 35 USC 371, exclusive of any reissue applications.

In order to qualify for special status, the following requirements must be met. 1) The application must have no more than 3 independent claims and no more than 20 total claims. 2) The application must not contain any multiple dependent claims. 3) The petition must state the basis for seeking special status, i.e., the claimed invention either: A) materially enhances the quality of the environment or B) materially contributes to: i) the discovery or development of renewable energy resources, ii) the more efficient utilization and conservation of energy resources, or iii) greenhouse gas emission reduction. 4) If the disclosure is not clear on its face that the claimed invention materially contributes under category (A) or (B), the petition must be accompanied by a statement by the applicant, assignee, or an attorney/agent registered to practice before the Office explaining how the materiality standard is met. 5) A statement that applicant will agree to make an election without traverse in a telephonic interview if a restriction requirement is made by the examiner. 6) The petition to make special must be filed electronically. 7) The petition must be filed at least one day prior to the date that a first Office Action appears in the Patent Application Information Retrieval (PAIR) system. 8) The petition must be accompanied by a request for early publication in compliance with 37 CFR 1.219 and include the publication fee as set forth in 37 CFR 1.18(d).

The requirement for a fee for consideration of the petition to make special for applications pertaining to Green Technologies has been waived.

The instant petition complies with items 1 – 8 above. Accordingly, the above-identified application has been accorded "special" status.

Telephone inquires concerning this decision should be directed to Tom Dunn at 571-272-1171.

The application is being forwarded to the Technology Center Art Unit 1725 for action on the merits commensurate with this decision.

/Tom Dunn/

Tom Dunn
Quality Assurance Specialist
Technology Center 1700

UNITED STATES PATENT AND TRADEMARK OFFICE

Commissioner for Patents
United States Patent and Trademark Office
P.O. Box 1450
Alexandria, VA 22313-1450
www.uspto.gov

KILPATRICK TOWNSEND & STOCKTON LLP
TWO EMBARCADERO CENTER
EIGHTH FLOOR
SAN FRANCISCO CA 94111-3834

MAILED

JUN 21 2011

OFFICE OF PETITIONS

In re Application of :
Hulst, et al. :
Application No. 13/012,541 : ON PETITION
Filed: January 24, 2011 :
Attorney Docket No. 87790-798069 :

This is in response to the petition under 37 CFR 1.182 to change the order of inventor names, filed June 8, 2011.

The petition is **GRANTED**.

Office records have been changed to reflect the change in the order of the inventors' names (1 - Patrick S. Racz, 2 - Hermenard Hulst).

The application is being forwarded to Group Art Unit 2887 for consideration of the Amendment, filed May 20, 2011.

Telephone inquiries regarding this decision should be directed to the undersigned at (571)272-3207.

Cliff Congo
Petitions Attorney
Office of Petitions

UNITED STATES PATENT AND TRADEMARK OFFICE

Commissioner for Patents
United States Patent and Trademark Office
P.O. Box 1450
Alexandria, VA 22313-1450
www.uspto.gov

STRATEGIC PATENTS P.C.
C/O CPA GLOBAL
P.O. BOX 52050
MINNEAPOLIS MN 55402

MAILED
SEP 20 2011
OFFICE OF PETITIONS

In re Application of
Youm, et al.
Application No. 13/012,557
Filed: 24 January, 2011
Attorney Docket No. TTRS-0005-P02

DECISION ON PETITION

This is a decision on the petition filed on 7 September, 2011, pursuant to 37 C.F.R. §1.47

**NOTE:**

Petitioner has placed the narration of much all of the facts herein in the hands of another. Thus, Petitioner may not have been in a position to have firsthand or direct knowledge of the facts and circumstances of the matter at issue.

Nevertheless, such statement is being treated as having been made as the result of a reasonable inquiry into the facts and circumstances of the matter.[1]

In the event that such an inquiry has not been made, Petitioner **must** make such an inquiry.

If such inquiry results in the discovery that it is not correct the facts and circumstances are other than that so presented, Petitioner **must** notify the Office.

The petition as considered pursuant to 37 C.F.R. §1.47(a) is **DISMISSED**.

Rule 47 applicant is given TWO (2) MONTHS from the mailing date of this decision to reply, correcting the below-noted deficiencies. Any reply should be entitled "Request for Reconsideration of Petition Pursuant to 37 C.F.R. §1.47(a)," and should address the deficiencies

[1] See 37 C.F.R. §11.18(b), formerly §10.18(b) and Changes to Patent Practice and Procedure; Final Rule Notice, 62 Fed. Reg. 53131, 53178 (October 10, 1997), 1203 Off. Gaz. Pat. Office 63, 103 (October 21, 1997).

noted below, except that the reply may include an oath or declaration executed by the non-signing inventor. **FAILURE TO RESPOND WILL RESULT IN ABANDONMENT OF THE APPLICATION.** Any extensions of time will be governed by 37 C.F.R. §1.136(a).

This is **not** a final agency action within the meaning of 5 U.S.C. §704.

A grantable petition pursuant to 37 C.F.R. §1.47(a) requires: (1) petition and fee; (2) proof that the non-signing inventor cannot be reached or refuses to sign the oath or declaration after having been presented with the application papers (specification: description, claims and drawings); (3) an acceptable oath or declaration in compliance with 35 U.S.C. §§ 115 and 116; and (4) a statement of the last known address of the non-signing inventor(s)—with diligence in the effort to ascertain the validity of the address set forth as the reasonably believed to be last known/current/valid address.

Petitioner does not seem to have worked through the requirements of the petition, as set forth above, in satisfaction of those requirements. (*See, generally:* MPEP §409.03, and §409.03(a)—the applicable statute (35 U.S.C.§ 116).

***In particular, Petitioner has not as of this writing satisfied the requirement(s) of the petition as listed above and discussed below.***

*Petitioners' attentions always are directed to the regulations at 37 C.F.R. §1.47(a) and to the guidance provided in the Commentary in the Manual of Patent Examining Procedure, including that at MPEP §409.03, et seq.*

*Petitioners always are reminded that for transmission by Email of any document (e.g., transmittal description, claims, abstract, drawing(s)) to be accepted by the Office, written acknowledgment of receipt and readability will be required.*

## BACKGROUND

The record reflects as follows:

The application was deposited on 24 January, 2011, without, *inter alia*, a fully executed oath/declaration.

On 11 February, 2011, the Office mailed a Notice of Missing Parts requiring, *inter alia*, a fully-executed oath/declaration.

On 7 September, 2011, Petitioner Robert A. Mazzarese (Reg. No. 42,852) filed, *inter alia*, a request and fee for extension of time, a petition pursuant to the regulations at 37 C.F.R. §1.47,

with an oath/declaration executed by Mr. Lim on behalf of the non-signing co-inventor Eui-Joon Youm (Mr. Youm)—notably, the assignment refers to a third co-inventor Glyn C. Thomas (Mr. Thomas) however, he does not appear on the oath/declaration (and so it is unclear whether the inventive entity is Youm-Lim-Thomas or Youm-Lim), with a statement by Petitioner and by Ms. Sayoko Blodgett-Ford (Ms. Blodgett-Ford), of the averred assignee, averring multiple transmittals/conversations/deliveries of the entire application (description, claims, abstract drawings) to Mr. Youm via Email and thereafter his failure to sign/join, and a statement of a valid/current/reasonably believed to be last known mailing address for the non-signing inventor. Therefore, while it appears that Petitioner may have provided a showing that one non-signing inventor actually and/or constructively refused to sign the oath or declaration after having been presented with the application papers (specification: description, claims and drawings)—though this also is in question due to the third-party statement (Mr. Okura)—the properly signed oath/declaration (due to the lack of clarity as to the actual inventive entity), with supporting certificate, appears to be missing (e.g., an acceptable oath or declaration in compliance with 35 U.S.C. §§ 115 and 116 because there is no signing (co-)inventor and no one signing with stated authority). On any renewed petition, Petitioner should ensure that all of the requirements under the Rule have been satisfied, to wit: (1) petition and fee; (2) proof that the non-signing inventor cannot be reached or refuses to sign the oath or declaration after having been presented with the application papers (specification: description, claims and drawings); (3) an acceptable oath or declaration in compliance with 35 U.S.C. §§ 115 and 116; and (4) a statement of the last known address of the non-signing inventor(s)—with diligence in the effort to ascertain the validity of the address set forth as the reasonably believed to be last known/current/valid address.

Thus, it does not appear that Petitioner satisfied the requirements under the Rule.

In view of the conflict and/or incompleteness of the showing, it does not appear as of this writing that Petitioner has satisfied the burden under the Rule. Thus Petitioner failed to make the showing as required under the Rule (37 C.F.R. §1.47(a)) and consistent with the guidance in the Commentary at MPEP §409.03, and §409.03(a).

*Petitioners always are reminded:*

- *for transmission by Email of any document to be accepted by the Office, written acknowledgment of receipt and readability of the message and all applicable attachments of required materials must be provided; and*

- *of the duties of candor to—with requirement for diligent inquiry before—the Office and to satisfy the Rules of Practice and the guidance in the Commentary at MPEP §409.03, and §409.03(a), et seq.*

Petitioner will find it beneficial to step through the requirements of a grantable petition under 37 C.F.R. §1.47(a) (i.e., (1) petition and fee; (2) proof that the non-signing inventor cannot be

reached or refuses to sign the oath or declaration after having been presented with the application papers (specification: description, claims and drawings); (3) an acceptable oath or declaration in compliance with 35 U.S.C. §§ 115 and 116; and (4) a statement of the last known address of the non-signing inventor(s)—with diligence in the effort to ascertain the validity of the address set forth as the reasonably believed to be last known/current/valid address) and satisfy himself that he has complied with these requirements on submission of any renewed petition. (*See also*: the guidance in the Commentary at MPEP §409.03, and §409.03(a), et seq.)

The availability of applications and application papers online to applicants/practitioners who diligently associate their Customer Number with the respective application(s) now provides an applicant/practitioner on-demand information as to events/transactions in an application. Thus, now if one wishes to know the progress in and/or status of an application or the accuracy of the data therein, one need only look at the file online.

Out of an abundance of caution, Petitioners always are reminded that those registered to practice *and* all others who make representations before the Office must inquire into the underlying facts of representations made to the Office and support averments with the appropriate documentation–since all owe to the Office the continuing duty to disclose.[2]

The instant petition pursuant to 37 C.F.R. §1.47(a) is **dismissed**.

Further correspondence with respect to this matter should be addressed as follows:

By mail:
Mail Stop PETITIONS
Commissioner for Patents
Post Office Box 1450
Alexandria, VA 22313-1450

By hand:
Customer Service Window
Mail Stop Petitions
Randolph Building
401 Dulany Street
Alexandria, VA 22314

By FAX:
(571) 273-8300
ATTN: Office of Petitions

[2] See supplement of 17 June, 1999. The Patent and Trademark Office is relying on petitioner's duty of candor and good faith and accepting a statement made by Petitioner. See Changes to Patent Practice and Procedure, 62 Fed. Reg. at 53160 and 53178, 1203 Off. Gaz. Pat. Office at 88 and 103 (responses to comments 64 and 109)(applicant obligated under 37 C.F.R. §10.18 to inquire into the underlying facts and circumstances when providing statements to the Patent and Trademark Office). See specifically, the regulations at 37 C.F.R. §10.18.

While telephone inquiries regarding this decision may be directed to the undersigned at (571) 272-3214—it is noted, however, that all practice before the Office is in writing (see: 37 C.F.R. §1.2[3]) and the proper authority for action on any matter in this regard are the statutes (35 U.S.C.), regulations (37 C.F.R.) and the commentary on policy (MPEP). Therefore, no telephone discussion may be controlling or considered authority for Petitioner's action(s).

/John J. Gillon, Jr./
John J. Gillon, Jr.
Senior Attorney
Office of Petitions

[3] The regulations at 37 C.F.R. §1.2 provide:

**§1.2 Business to be transacted in writing.**

All business with the Patent and Trademark Office should be transacted in writing. The personal attendance of applicants or their attorneys or agents at the Patent and Trademark Office is unnecessary. The action of the Patent and Trademark Office will be based exclusively on the written record in the Office. No attention will be paid to any alleged oral promise, stipulation, or understanding in relation to which there is disagreement or doubt.

UNITED STATES PATENT AND TRADEMARK OFFICE

Commissioner for Patents
United States Patent and Trademark Office
P.O. Box 1450
Alexandria, VA 22313-1450
www.uspto.gov

STRATEGIC PATENTS P.C.
C/O CPA GLOBAL
P.O. BOX 52050
MINNEAPOLIS MN 55402

MAILED

NOV 21 2011

OFFICE OF PETITIONS

In re Application of
Youm, et al.
Application No. 13/012,557
Filed: 24 January, 2011
Attorney Docket No. TTRS-0005-P02

DECISION ON PETITION

This is a decision on the petition filed on 18 October, 2011, pursuant to 37 C.F.R. §1.47

The petition as considered pursuant to 37 C.F.R. §1.47(a) is **GRANTED**.

A grantable petition pursuant to 37 C.F.R. §1.47(a) requires: (1) petition and fee; (2) proof that the non-signing inventor cannot be reached or refuses to sign the oath or declaration after having been presented with the application papers (specification: description, claims and drawings); (3) an acceptable oath or declaration in compliance with 35 U.S.C. §§ 115 and 116; and (4) a statement of the last known address of the non-signing inventor(s)—with diligence in the effort to ascertain the validity of the address set forth as the reasonably believed to be last known/current/valid address.

*Petitioners' attentions always are directed to the regulations at 37 C.F.R. §1.47(a) and to the guidance provided in the Commentary in the Manual of Patent Examining Procedure, including that at MPEP §409.03, et seq.*

*Petitioners always are reminded that for transmission by Email of any document (e.g., transmittal description, claims, abstract, drawing(s)) to be accepted by the Office, written acknowledgment of receipt and readability will be required.*

## BACKGROUND

The record reflects as follows:

The application was deposited on 24 January, 2011, without, *inter alia*, a fully executed oath/declaration.

On 11 February, 2011, the Office mailed a Notice of Missing Parts requiring, *inter alia*, a fully-executed oath/declaration.

On 7 September, 2011, Petitioner Robert A. Mazzarese (Reg. No. 42,852) filed, *inter alia*, a request and fee for extension of time, a petition pursuant to the regulations at 37 C.F.R. §1.47, with an oath/declaration executed by Mr. Lim on behalf of the non-signing co-inventor Eui-Joon Youm (Mr. Youm)—notably, the assignment refers to a third co-inventor Glyn C. Thomas (Mr. Thomas) however, he does not appear on the oath/declaration (and so it is unclear whether the inventive entity is Youm-Lim-Thomas or Youm-Lim), with a statement by Petitioner and by Ms. Sayoko Blodgett-Ford (Ms. Blodgett-Ford), of the averred assignee, averring multiple transmittals/conversations/deliveries of the entire application (description, claims, abstract drawings) to Mr. Youm via Email and thereafter his failure to sign/join, and a statement of a valid/current/reasonably believed to be last known mailing address for the non-signing inventor. Therefore, while it appears that Petitioner may have provided a showing that one non-signing inventor actually and/or constructively refused to sign the oath or declaration after having been presented with the application papers (specification: description, claims and drawings)—though this also is in question due to the third-party statement (Mr. Okura)—the properly signed oath/declaration (due to the lack of clarity as to the actual inventive entity), with supporting certificate, appeared to be missing (e.g., an acceptable oath or declaration in compliance with 35 U.S.C. §§ 115 and 116 because there is no signing (co-)inventor and no one signing with stated authority). The petition was dismissed on 20 September, 2011, for, *inter alia*, Petitioner's failure to make clear the inventive entity.

On 7 September, 2011, Petitioner re-advanced the petition and made clear the nature of the inventive entity (Mr. Lim and Mr. Youm), and, in so doing, appears to have completed the requirements—to wit: (1) petition and fee; (2) proof that the non-signing inventor cannot be reached or refuses to sign the oath or declaration after having been presented with the application papers (specification: description, claims and drawings); (3) an acceptable oath or declaration in compliance with 35 U.S.C. §§ 115 and 116; and (4) a statement of the last known address of the non-signing inventor(s)—with diligence in the effort to ascertain the validity of the address set forth as the reasonably believed to be last known/current/valid address. Thus, Petitioner sought to satisfy the requirements pursuant to the Rule and the guidance in the Commentary at MPEP §409.03, and §409.03(a) et seq.), and provide a showing that the non-signing inventor could not be found/refused to sign after diligent effort.

The availability of applications and application papers online to applicants/practitioners who diligently associate their Customer Number with the respective application(s) now provides an applicant/practitioner on-demand information as to events/transactions in an application.

Out of an abundance of caution, Petitioners always are reminded that those registered to practice and all others who make representations before the Office **must** inquire into the underlying facts of representations made to the Office and support averments with the appropriate documentation–since all owe to the Office the continuing duty to disclose.[1]

## CONCLUSION

The instant petition under 37 C.F.R. §1.47(a) is **granted** (status is accorded pursuant to 37 C.F.R. §1.47(a).)

As provided in 37 C.F.R. §1.47(c), this Office will forward notice of this application's filing to the non-signing inventors at the addresses given in the petition. Notice of the filing of this application will also be published in the Official Gazette.

The instant application is released to the Office of Patent Application Processing (OPAP) for such processing as required in due course.

Telephone inquiries regarding this decision may be directed to the undersigned at (571) 272-3214—it is noted, however, that all practice before the Office is in writing (see: 37 C.F.R. §1.2[2]) and the proper authority for action on any matter in this regard are the statutes (35 U.S.C.), regulations (37 C.F.R.) and the commentary on policy (MPEP). Therefore, no telephone discussion may be controlling or considered authority for Petitioner's action(s).

/John J. Gillon, Jr./
John J. Gillon, Jr.
Senior Attorney
Office of Petitions

---

[1] See supplement of 17 June, 1999. The Patent and Trademark Office is relying on petitioner's duty of candor and good faith and accepting a statement made by Petitioner. See Changes to Patent Practice and Procedure, 62 Fed. Reg. at 53160 and 53178, 1203 Off. Gaz. Pat. Office at 88 and 103 (responses to comments 64 and 109)(applicant obligated under 37 C.F.R. §11.18, formerly §10.18 to inquire into the underlying facts and circumstances when providing statements to the Patent and Trademark Office).

[2] The regulations at 37 C.F.R. §1.2 provide:

**§1.2 Business to be transacted in writing.**
All business with the Patent and Trademark Office should be transacted in writing. The personal attendance of applicants or their attorneys or agents at the Patent and Trademark Office is unnecessary. The action of the Patent and Trademark Office will be based exclusively on the written record in the Office. No attention will be paid to any alleged oral promise, stipulation, or understanding in relation to which there is disagreement or doubt

UNITED STATES PATENT AND TRADEMARK OFFICE

Commissioner for Patents
United States Patent and Trademark Office
P.O. Box 1450
Alexandria, VA 22313-1450
www.uspto.gov

EUI-JOON YOUM
1200 QUEEN EMMA STREET
CAPITAL PLACE #2010
HONOLULU, HI 96813

MAILED

NOV 21 2011

OFFICE OF PETITIONS

In re Application of
Youm, et al.
Application No. 13/012,557
Filed: 24 January, 2011
Attorney Docket No. TTRS-0005-P02

COMMUNICATION

Dear Eui-Joon Youm:

You are named as an inventor in the above-identified United States patent application, filed under the provisions of 35 U.S.C. §116 (United States Code), and 37 C.F.R. §1.47 (Code of Federal Regulations), Rules of Practice in Patent Cases. Should a patent be granted on the application you will be designated therein as an inventor.

As a named inventor you are entitled to inspect any paper in the file wrapper of the application, order copies of all or any part thereof (at a prepaid cost per 37 C.F.R. §1.19) or make your position of record in the application. Alternatively, you may arrange to do any of the preceding through a registered patent attorney or agent presenting written authorization from you. If you care to join the application, counsel of record (see below) would presumably assist you. Joining the application would entail the filing of an appropriate oath or declaration by you pursuant to 37 C.F.R. §1.63.

Should you elect to join in the application, the contact information for Counsel of Record is set forth at the end of this Communication.

Should you seek to identify independent Counsel, you may find the Patent Attorneys/Agents Search engine of assistance (https://oedci.uspto.gov/OEDCI/ ).

Requests for information regarding your application should be directed to the File Information Unit at (703) 308-2733. Information regarding how to pay for and order a copy of the application, or a specific paper in the application, should be directed to the Certification Division at (571) 272-3150 or 1 (800) 972-6382 (outside the Washington, DC area).

Telephone inquiries regarding this communication may be directed to the undersigned at (571) 272-3214—it is noted, however, that all practice before the Office is in writing (see: 37 C.F.R. §1.2[1]) and the proper authority for action on any matter in this regard are the statutes (35 U.S.C.), regulations (37 C.F.R.) and the commentary on policy (MPEP). Therefore, no telephone discussion may be controlling or considered authority for Petitioner's/your action(s) and/or inactions. Moreover, the Office can neither advise you nor recommend Counsel in this matter.

/John J. Gillon, Jr./
John J. Gillon, Jr.
Senior Attorney
Office of Petitions

Counsel of Record:
STRATEGIC PATENTS P.C.
C/O CPA GLOBAL
P.O. BOX 52050
MINNEAPOLIS MN 55402

[1] The regulations at 37 C.F.R. §1.2 provide:
**§1.2 Business to be transacted in writing.**
All business with the Patent and Trademark Office should be transacted in writing. The personal attendance of applicants or their attorneys or agents at the Patent and Trademark Office is unnecessary. The action of the Patent and Trademark Office will be based exclusively on the written record in the Office. No attention will be paid to any alleged oral promise, stipulation, or understanding in relation to which there is disagreement or doubt

**Doc Code: PET.GREEN**
**Document Description: Petition for Green Tech Pilot**

PTO/SB/420 (05-10)
Approved for use through 05/31/2010. OMB 0651-0062
U.S. Patent and Trademark Office; U.S. DEPARTMENT OF COMMERCE
Under the Paperwork Reduction Act of 1995, no persons are required to respond to a collection of information unless it displays a valid OMB control number.

# PETITION TO MAKE SPECIAL UNDER THE GREEN TECHNOLOGY PILOT PROGRAM

| Attorney Docket Number: SUS-001CPC2 | Application Number (if known): | Filing date: Herewith |
|---|---|---|
| First Named Inventor: Troy O. McBride | | |
| Title: SYSTEMS AND METHODS FOR ENERGY STORAGE AND RECOVERY USING RAPID ISOTHERMAL GAS EXPANSION AND COMPRESSION | | |

**APPLICANT HEREBY REQUESTS TO PARTICIPATE IN THE GREEN TECHNOLOGY PILOT PROGRAM FOR THE ABOVE-IDENTIFIED APPLICATION. See Instruction Sheet on page 2.**

This petition must be timely filed electronically using the USPTO electronic filing system, EFS-Web.

1. By filing this petition:

   **Applicant is requesting early publication: Applicant hereby requests early publication under 37 CFR 1.219 and the publication fee set forth in 37 CFR 1.18(d) accompanies this request.**

2. By filing this petition: applicant is agreeing to make an election without traverse in a telephonic interview and elect an invention that meets the eligibility requirements set forth in the notice titled "Pilot Program for Green Technologies Including Greenhouse Gas Reduction," as modified by the notice titled "Elimination of Classification Requirement in the Green Technology Pilot Program," each of which was published in the Federal Register, if the Office determines that the claims are not obviously directed to a single invention.

3. This request is accompanied by statements of special status for the eligibility requirement.

4. The application contains no more than three (3) independent claims and twenty (20) total claims.

5. The application does not contain any multiple dependent claims

6. Other attachments: Preliminary Amendment
   Statement of Special Status

| Signature /Matthew T. Currie/ | Date January 24, 2011 |
|---|---|
| Name (Print/Typed) Matthew T. Currie | Registration Number 58,533 |

***Note**: Signatures of all the inventors or assignees of record of the entire interest or their representative(s) are required in accordance with 37 CFR 1.33 and 11.18. Please see 37 CFR 1.4(d) for the form of the signature. If necessary, submit multiple forms if more than one signature, see below*.*

☐ *Total of 1 forms are submitted.

**IN THE UNITED STATES PATENT AND TRADEMARK OFFICE**

| | | | |
|---|---|---|---|
| APPLICANTS: | McBride *et al.* | | |
| SERIAL NO.: | Not yet assigned | GROUP NO.: | Not yet assigned |
| FILING DATE: | Herewith | EXAMINER: | Not yet assigned |
| TITLE: | SYSTEMS AND METHODS FOR ENERGY STORAGE AND RECOVERY USING RAPID ISOTHERMAL GAS EXPANSION AND COMPRESSION | | |

Commissioner for Patents
P.O. Box 1450
Alexandria, VA 22313-1450

## STATEMENTS OF SPECIAL STATUS AND MATERIALITY IN SUPPORT OF PETITION TO MAKE SPECIAL UNDER THE GREEN TECHNOLOGY PILOT PROGRAM

In accordance with the Federal Register notices published December 8, 2009, May 21, 2010, and November 10, 2010, Applicants hereby request to participate in the Green Technology Pilot Program for the above-identified application. Applicants submit that the invention claimed in the above-identified application materially contributes to the development of renewable energy resources and the conservation of energy resources at least because the invention solves a persistent problem with intermittent energy-generation systems (e.g., wind and solar renewable energy) by providing systems for storing and recovering the energy from these sources, thereby making them deployable on a widespread and practical basis. Thus, the claimed invention directly contributes to the conservation of energy resources by enabling the replacement of fossil-fuel-dependent energy sources with renewable energy sources.

Specifically, the claimed energy storage and generation system features a cylinder for compressing gas to store energy and expanding gas to impart energy, as well as a control system for controlling operation of the cylinder. The control system enforces substantially isothermal expansion and compression of the gas, thereby increasing efficiency of the clean energy storage and recovery. The control system controls the rate of heat flow into and out of the cylinder in order to enforce the substantially isothermal expansion and compression by, e.g., fluid circulation to and spray within the cylinder. When this simple and compact system is coupled to

renewable energy sources (e.g., wind turbines or solar cells), it stores the energy produced thereby in the form of compressed gas. Then, during periods of high power demand and/or periods when the wind turbine or solar cell is not producing energy (e.g., periods of calm or night), the compressed-gas energy may be utilized to produce electricity and satisfy demand.

In addition, the claimed invention assists in the conservation of energy and reduction of greenhouse-gas emissions by eliminating energy waste due to fluctuations in power demand. The claimed invention eliminates the need for rapidly-deployable gas turbines or generators that require the use of non-renewable energy resources (e.g., natural gas and diesel fuel) and are environmentally damaging due to their inherent noise and emissions. Instead, the claimed systems may be utilized to service fluctuating power demand without concomitant fossil-fuel use or greenhouse-gas emission.

Applicants believe no additional fees are necessitated by the filing of this paper. However, if any additional fee is due, please charge said fee occasioned by this paper to our Deposit Account No. 50-4047.

Respectfully submitted,

Date: January 24, 2011
Reg. No. 58,533

Electronic Signature: /Matthew T. Currie/
Matthew T. Currie
Attorney for Applicants
Bingham McCutchen LLP
One Federal Street
Boston, Massachusetts 02110

Tel. No.: (617) 951-8293
Fax No.: (617) 951-8736

UNITED STATES PATENT AND TRADEMARK OFFICE

UNITED STATES DEPARTMENT OF COMMERCE
United States Patent and Trademark Office
Address: COMMISSIONER FOR PATENTS
P.O. Box 1450
Alexandria, Virginia 22313-1450
www.uspto.gov

| APPLICATION NO. | FILING DATE | FIRST NAMED INVENTOR | ATTORNEY DOCKET NO. | CONFIRMATION NO. |
|---|---|---|---|---|
| 13/012,610 | 01/24/2011 | Troy O. McBride | SUS-001CPC2/7300653004 | 7124 |

23517 7590 04/04/2011

BINGHAM MCCUTCHEN LLP
2020 K Street, N.W.
Intellectual Property Department
WASHINGTON, DC 20006

| EXAMINER | |
|---|---|
| ART UNIT | PAPER NUMBER |
| 3744 | |

| MAIL DATE | DELIVERY MODE |
|---|---|
| 04/04/2011 | PAPER |

**Please find below and/or attached an Office communication concerning this application or proceeding.**

The time period for reply, if any, is set in the attached communication.

UNITED STATES PATENT AND TRADEMARK OFFICE

Commissioner for Patents
United States Patent and Trademark Office
P.O. Box 1450
Alexandria, VA 22313-1450
www.uspto.gov

BINGHAM MCCUTCHEN LLP
2020 K Street, N.W.
Intellectual Property Department
WASHINGTON DC 20006

| | | |
|---|---|---|
| In re Application of | : | |
| MCBRIDE, TROY O. et al | : | DECISION ON PETITION |
| Application No. 13/012,610 | : | TO MAKE SPECIAL UNDER |
| Filed: Jan. 24, 2011 | : | THE GREEN TECHNOLOGY |
| Attorney Docket No. SUS-001CPC2/7300653004 | : | PILOT PROGRAM |

This is a decision on the petition under 37 CFR 1.102, filed Jan. 24, 2011, to make the above-identified application special under the pilot program for applications pertaining to Green Technologies as set forth in 74 Federal Register Notice 64666 (December 8, 2009) and amended by 75 Federal Register Notice 28554 (May 21, 2010) and 75 Federal Register Notice 69049 (November 10, 2010).

The petition is granted.

If reconsideration of this decision is desired, a petition for reconsideration must be filed within ONE (1) MONTH OR THIRTY (30) DAYS from the mail date of this decision, whichever is longer. No extension of this time limit can be granted under 37 CFR 1.136(a) or (b). The petition for reconsideration should include an exhaustive attempt to provide the lacking item(s) noted below, since, after a decision on the petition for reconsideration, no further reconsideration or review of the matter will be undertaken by the Director.

A grantable petition to make an application special under 37 CFR 1.102 and the pilot program as set forth in 74 FR 64666 must be directed to a nonprovisional application filed under 35 USC 111(a) or be a national stage entry under 35 USC 371, exclusive of any reissue applications.

In order to qualify for special status, the following requirements must be met. 1) The application must have no more than 3 independent claims and no more than 20 total claims. 2) The application must not contain any multiple dependent claims. 3) The petition must state the basis for seeking special status, i.e., the claimed invention either: A) materially enhances the quality of the environment or B) materially contributes to: i) the discovery or development of renewable energy resources, ii) the more efficient utilization and conservation of energy resources, or iii) greenhouse gas emission reduction. 4) If the disclosure is not clear on its face that the claimed

invention materially contributes under category (A) or (B), the petition must be accompanied by a statement by the applicant, assignee, or an attorney/agent registered to practice before the Office explaining how the materiality standard is met. 5) A statement that applicant will agree to make an election without traverse in a telephonic interview if a restriction requirement is made by the examiner. 6) The petition to make special must be filed electronically. 7) The petition must be filed at least one day prior to the date that a first Office Action appears in the Patent Application Information Retrieval (PAIR) system. 8) The petition must be accompanied by a request for early publication in compliance with 37 CFR 1.219 and include the publication fee as set forth in 37 CFR 1.18(d). The requirement for a fee for consideration of the petition to make special for applications pertaining to Green Technologies has been waived.

The instant petition complies with items 1 – 8 above. Accordingly, the above-identified application has been accorded "special" status.

Telephone inquires concerning this decision should be directed to Henry C. Yuen at 571-272-4856.

This application will be forwarded to the Technology Center Art Unit 3744 for action on the merits commensurate with this decision.

/Henry C. Yuen/

Henry C. Yuen
Quality Assurance Specialist
Technology Center TC 3700

UNITED STATES PATENT AND TRADEMARK OFFICE

Commissioner for Patents
United States Patent and Trademark Office
P.O. Box 1450
Alexandria, VA 22313-1450
www.uspto.gov

MAILED

JAN 12 2012

OFFICE OF PETITIONS

BIRCH STEWART KOLASCH & BIRCH
P.O. BOX 747
FALLS CHURCH, VA 22040-0747

**In re Application of**
**Shugong XU**
**Application No.: 13/012,668**
**Filed: January 24, 2011**
**Attorney Docket No.: 1609-0259PUS2**
**Title: Method and System for Control of Discontinuous Reception (DRX)...**

**: DECISION ON REQUEST TO**
**: PARTICIPATE IN THE PATENT**
**: PROSECUTION HIGHWAY**
**: PROGRAM AND PETITION**
**: TO MAKE SPECIAL UNDER**
**: 37 CFR 1.102(a)**

This is a decision on the request to participate in the Patent Prosecution Highway (PPH) program and the petition under 37 CFR 1.102(a), filed November 28, 2011, to make the above-identified application special.

The request and petition are **DISMISSED**.

A grantable request to participate in the PPH program and petition to make special require:

1. The U.S. application must validly claim priority under 35 U.S.C. 119(a) to one or more applications filed in the JPO, note where the JPO application with similar claims is not the same application from which the U.S. application claims priority then the applicant must identify the relationship between the JPO application with similar claims and the JPO priority application;

2. Applicant must submit a copy of:
   a. The allowable/patentable claim(s) from the JPO application(s) or if a copy of the allowable/patentable claims is available via the Dossier Access System (DAS) applicant may request the USPTO obtain a copy from the DAS, however if the USPTO is unable to obtain a copy from the DAS the applicant will be required to submit a copy;
   b. An English translation of the allowable/patentable claim(s) and
   c. A statement that the English translation is accurate;

3. Applicant must
   a. Ensure all the claims in the U.S. application must sufficiently correspond or be amended to sufficiently correspond to the allowable/patentable claim(s) in the JPO application(s) and
   b. Submit a claims correspondence table in English;

4. Examination of the U.S. application has not begun;

5. Applicant must submit:
    a. Documentation of prior office action:
        i. a copy of the office action(s) just prior to the "Decision to Grant a Patent" from each of the JPO application(s) containing the allowable/patentable claim(s) or
        ii. if the allowable/patentable claims(s) are from a "Notification of Reasons for Refusal" then the Notification of Reasons for Refusal or
        iii. if the JPO application is a first action allowance then no office action from the JPO is necessary should be indicated on the request/petition form;

    Further, if a copy of the documents from a or b above is available via the Dossier Access System (DAS) applicant may request the USPTO obtain a copy from the DAS, however if the USPTO is unable to obtain a copy from the DAS the applicant will be required to submit a copy;
    b. An English language translation of the JPO Office action from (5)(a)(i)-(ii) above
    c. A statement that the English translation is accurate;

6. Applicant must submit:
    a. An IDS listing the documents cited by the JPO examiner in the JPO office action (unless already submitted in this application)
    b. Copies of the documents except U.S. patents or U.S. patent application publications (unless already submitted in this application);

Conditions (2, 4-6) above are considered to have been met. However, the request to participate in the PPH pilot program and petition fails meet condition (1, 3).

Regarding the requirement of condition (1), applicant claims no priority to a JPO application or PCT under 35 U.S.C. 119(a).

Regarding the requirement of condition (3), applicant indicates on the Request for Participation in the Patent Prosecution Highway form that JP 2010-506739 is the National Stage of PCT/JP2008/064672. The claims of PCT/JP2008/064672 do not correspond to the claims filed (January 24, 2011) for the US application. Petitioner indicates that patented Japanese claims 1-2 are substantially identical to claim 1 in the US application and that patented Japanese claims 1, 3 are substantially identical to claim 2 in the US application. However, the Japanese claims are drawn to a product and the US claims are drawn to a method.

Applicant is given **ONE** opportunity within a time period of **ONE MONTH or THIRTY DAYS**, whichever is longer, from the mailing date of this decision to correct the deficiencies. **NO EXTENSION OF TIME UNDER 37 CFR 1.136 IS PERMITTED.** If the deficiencies are not corrected with the time period given, the application will await action in its regular turn.

Response must be filed via the Electronic Filing System (EFS) using the document description: Petition to make special under Patent Pros Hwy. Any preliminary amendments and IDS submitted with the PPH documents must be separately indexed as a preliminary amendment and IDS, respectively.

Telephone inquiries concerning this decision should be directed to Joanne Hama at 571-272-2911 or to the undersigned at 571-272-7099.

All other inquiries concerning the examination or status of the application is accessible in the PAIR system at http://www.uspto.gov/ebc/index.html.

David Bucci
Petitions Examiner
Office of Petitions

UNITED STATES PATENT AND TRADEMARK OFFICE

Commissioner for Patents
United States Patent and Trademark Office
P.O. Box 1450
Alexandria, VA 22313-1450
www.uspto.gov

**VICTOR HA ALBRIGHT**
**10757 MARBURY AVENUE**
**SAN DIEGO, CA 92126**

MAILED
NOV 18 2011
OFFICE OF PETITIONS

In re Application of :
Victor Ha ALBRIGHT :
Application No. 13/012,672 :
Filed: January 24, 2011 :
No Attorney Docket No. :

DECISION ON PETITION

This is a decision on the petition under 37 CFR 1.137(b), filed November 4, 2011, to revive the above-identified application.

The petition is **GRANTED**.

The above-identified application became abandoned for failure to file a proper reply in a timely manner to the Notice to File Missing Parts of Nonprovisional Application mailed February 8, 2011, which set a shortened statutory period for reply of two (2) months. It is noted that while Applicant indicates that a five (5) month extension of time payment was included with the instant filing, the payment of extension of time has been deemed as unnecessary. See below. Accordingly, the above-identified application became abandoned on April 9, 2011.

The petition satisfies the conditions for revival pursuant to the provisions of 37 CFR 1.137(b) in that (1) the reply in the form of the required fee of $110 for one independent claim over 3, and an oath or declaration; (2) the petition fee of $930; and (3) the required statement of unintentional delay have been received. Accordingly, the reply to the Notice to File Missing Parts of Nonprovisional Application of February 8, 2011 is accepted as having been unintentionally delayed.

An extension of time under 37 CFR 1.136 must be filed prior to the expiration of the maximum extendable period for reply. *See*In re Application of S., 8 USPQ2d 1630, 1631 (Comm'r Pats. 1988). Since the $1345extension of time fee submitted with the petition on November 3, 2011 was subsequent to the maximum extendable period for reply, this fee is unnecessary and will be credited to petitioner's credit card.

Telephone inquiries concerning this decision should be directed to Joanne Hama at (571) 272-2911 or in her absence to the undersigned at (571) 272-7099.

The application is being referred to the Office of Data Management.

David Bucci
Petitions Examiner
Office of Petitions

UNITED STATES PATENT AND TRADEMARK OFFICE

Commissioner for Patents
United States Patent and Trademark Office
P.O. Box 1450
Alexandria, VA 22313-1450
www.uspto.gov

**PEACOCK MYERS, P.C.**
**201 THIRD STREET, N.W.**
**SUITE 1340**
**ALBUQUERQUE NM 87102**

MAILED

APR 25 2011

OFFICE OF PETITIONS

In re Application of :
LaVerne Arthur Schlie et al. :
Application No. 13/012,697 : DECISION ON PETITION
Filed: January 24, 2011 : TO MAKE SPECIAL UNDER
Attorney Docket No. 31550-1003-UT : 37 CFR 1.102(c)(1)
:

This is a decision on the petition under 37 CFR 1.102(c)(1), filed February 15, 2011, to make the above-identified application special based on applicant's age as set forth in M.P.E.P. § 708.02, Section IV.

The petition is **GRANTED**.

A grantable petition to make an application special under 37 CFR 1.102(c)(1) and MPEP § 708.02, Section IV: Applicant's Age must be accompanied by evidence showing that at least one of the applicants is 65 years of age, or more, such as a birth certificate or a statement by applicant. No fee is required

The instant petition includes a statement by inventor LaVerne Arthur Schlie attesting to his/her age. The above-identified application has been accorded "special" status.

Telephone inquiries concerning this decision should be directed to Kimberly Inabinet at 571-272-4618.

All other inquiries concerning either the examination or status of the application should be directed to the Technology Center.

Upon completion of the pre-examination processing by the Office of Patent Application Processing, this application will be referred to Technology Center 1721 for action on the merits commensurate with this decision.

/Kimberly Inabinet/

Kimberly Inabinet
Petitions Examiner
Office of Petitions

UNITED STATES PATENT AND TRADEMARK OFFICE

Commissioner for Patents
United States Patent and Trademark Office
P.O. Box 1450
Alexandria, VA 22313-1450
www.uspto.gov

STRATEGIC PATENTS P.C..
C/O CPA Global
P.O. BOX 52050
MINNEAPOLIS MN 55402

MAILED
SEP 12 2011
OFFICE OF PETITIONS

In re Application of :
Youm :
Application No. 13/012,743 : DECISION REFUSING STATUS
Filed: January 24, 2011 : UNDER 37 CFR 1.47(b)
Attorney Docket No. **TTRS-0005-P03** :
For: **INTERACTIVE ASYNCHRONOUS GAME OFFLINE PLAY ARCHITECTURE**

This is a decision on the petition under 37 CFR 1.47(b), filed September 7, 2011.

The petition under 37 CFR 1.47(b) is **dismissed.**

Any request for reconsideration under this decision must be submitted within TWO (2) MONTHS from the mail date of this decision. Extensions of time under 37 CFR 1.136(a) are permitted. Failure to respond will result in the abandonment of this application. Any response should be titled "Request for Reconsideration of Petition Under 37 CFR 1.47(b).

The above-identified application was filed on January 24, 2011, and was not accompanied by a properly executed declaration under 37 CFR 1.63. A Notice to File Missing Parts of Non-Provisional Application was mailed February 9, 2011, requiring a properly executed declaration, along with other items. The instant petition was filed September 7, 2011, with an extension of time within the fifth month.

A grantable petition under 37 CFR 1.47(b) requires:

(1) proof that the non-signing inventor(s) cannot be reached or refuses to sign the oath or declaration after having been presented with the application papers (specification, claims, and drawings).

(2) an acceptable oath or declaration in compliance with 35 U.S.C. §§ 115 and 116;

(3) the petition fee,

(4) a statement of the last known address of the non-signing inventor,

(5) proof of proprietary interest, and

(6) a showing (statement) that such action is necessary to preserve the rights of the parties or to prevent irreparable damage.

The instant petition lacks item (2) set forth above.

As to item (2), the papers filed with the petition indicate that the invention disclosed in the subject application is assigned to Tetris Online, Inc. Accordingly, the petitioner is not simply a 37 CFR 1.47(b) applicant, but an assignee. Thus, the declaration filed with the instant petition cannot be accepted until the assignee demonstrates that it has the power to prosecute the application. Section 409.03(b) of the *Manual of Patent Examining Procedure* provides, in pertinent part, that, "[w]here the oath or declaration is being signed on behalf of an assignee, see MPEP 324." Section 324 of the Manual of Patent Examining Procedure cites 37 CFR 3.71(c) which states that, "[a]n assignee becomes of record either in a national patent application or a reexamination proceeding by filing a statement in compliance with 3.73(b) that is signed by a party who is authorized to act on behalf of the assignee." Petitioner should note that 37 CFR 3.73 requires that before an assignee can take action in a patent matter, the assignee must establish ownership of the patent property in accordance with 37 CFR 3.73(b)(1)(i) or (ii). No statement or certificate meeting the requirements of 37 CFR 3.73 was found with the petition. Petitioner must properly establish ownership of the patent property before the assignee will be granted authority under 37 CFR 1.47(b) to prosecute the application. Form PTO/SB/96 is enclosed for petitioner's convenience.

Further correspondence with respect to this matter should be addressed as follows:

By mail: Mail Stop Petitions
Commissioner for Patents
P.O. Box 1450
Alexandria, VA 22313-1450

By FAX: (571) 273-8300
Attn: Office of Petitions

Telephone inquiries concerning this decision should be directed to the undersigned at (571) 272-3222.

/Kenya A. McLaughlin/

Kenya A. McLaughlin
Petitions Attorney
Office of Petitions

Enclosure: Form PTO/SB/96

UNITED STATES PATENT AND TRADEMARK OFFICE

Commissioner for Patents
United States Patent and Trademark Office
P.O. Box 1450
Alexandria, VA 22313-1450
www.uspto.gov

STRATEGIC PATENTS P.C..
C/O CPA Global
P.O. BOX 52050
MINNEAPOLIS MN 55402

MAILED

SEP 27 2011

OFFICE OF PETITIONS

In re Application of :
Youm :
Application No. 13/012,743 : DECISION ACCORDINGSTATUS
Filed: January 24, 2011 : UNDER 37 CFR 1.47(b)
Attorney Docket No. **TTRS-0005-P03** :
For: **INTERACTIVE ASYNCHRONOUS GAME OFFLINE PLAY ARCHITECTURE**

This is in response to the renewed petition under 37 CFR 1.47(b), filed September 20, 2011.

The petition is **GRANTED**.

The above-identified application and papers have been reviewed and found in compliance with 37 CFR 1.47(b). This application is hereby accorded Rule 1.47(b) status.

The above-identified application was filed on January 24, 2011, and was not accompanied by a properly executed declaration under 37 CFR 1.63. A Notice to File Missing Parts of Non-Provisional Application was mailed February 9, 2011, requiring a properly executed declaration, along with other items. A petition under 37 CFR 1.47(b) was filed on September 7, 2011, with an extension of time within the fifth month. The petition was dismissed by a decision mailed September 12, 2011.

By the instant petition and evidentiary documents, petitioner has established that the assignee has sufficient proprietary interest to proceed with prosecution of the application without the joint inventors.

As provided in Rule 1.47(c), this Office will forward notice of this application's filing to the non-signing inventors at the addresses given in the petition. Notice of the filing of this application will also be published in the Official Gazette.

This application will be forwarded to the Office of Patent Application Processing for further review.

Telephone inquiries concerning this decision should be directed to the undersigned at (571) 272-3222.

/Kenya A. McLaughlin/

Kenya A. McLaughlin
Petitions Attorney
Office of Petitions

UNITED STATES PATENT AND TRADEMARK OFFICE

Commissioner for Patents
United States Patent and Trademark Office
P.O. Box 1450
Alexandria, VA 22313-1450
www.uspto.gov

Eui-Joon Youm
Ace Studios, Inc.
55 Merchant Street, Suite 1430
Honolulu, HI 96813

MAILED
SEP 27 2011
OFFICE OF PETITIONS

In re Application of :
Youm :
Application No. 13/012,743 : LETTER
Filed: January 24, 2011 :
Attorney Docket No. **TTRS-0005-P03** :
For: **INTERACTIVE ASYNCHRONOUS GAME OFFLINE PLAY ARCHITECTURE**

Dear Mr. Youm:

You are named as a joint inventor in the above-identified United States patent application filed under the provisions of 35 U.S.C. 116 (United States Code) and 37 CFR 1.47(b), Rules of Practice in Patent Cases. Should a patent be granted on the application you will be designated therein as a joint inventor.

As a joint inventor, you are entitled to inspect any paper in the file wrapper of the application, order copies of all or any part thereof (at a prepaid cost per 37 CFR 1.19) or make your position of record in the application. Alternatively, you may arrange to do any of the preceding through a registered patent attorney or agent presenting written authorization from you. If you care to join the application, counsel of record (see below) would presumably assist you. Joining in the application would entail the filing of an appropriate oath or declaration by you pursuant to 37 CFR 1.63.

Telephone inquiries regarding this communication should be directed to Petitions Attorney Kenya A. McLaughlin at (571) 272-3222. Requests for information regarding your application should be directed to the File Information Unit at (703) 308-2733. Information regarding how to pay for and order a copy of the application, or a specific paper in the application, should be directed to Certification Division at (703) 308-9726 or 1-800-972-6382 (outside the Washington D.C. area).

/Kenya a. McLaughlin/

Kenya A. McLaughlin
Petitions Attorney
Office of Petitions

STRATEGIC PATENTS P.C..
C/O CPA Global
P.O. BOX 52050
MINNEAPOLIS MN 55402

UNITED STATES PATENT AND TRADEMARK OFFICE

Commissioner for Patents
United States Patent and Trademark Office
P.O. Box 1450
Alexandria, VA 22313-1450
www.uspto.gov

In re Application of
MATTHIAS W RATH

Application No. 13012769

Filed:

Attorney Docket No. RIPLLC018.003US1

:DECISION ON PETITION TO MAKE SPECIAL
:UNDER 37 CFR 1.102(c)(1)

This is a decision on the electronic petition under 37 CFR 1.102 (c)(1), filed 24-JAN-2011 to make the above-identified application special based on applicant's age as set forth in MPEP § 708.02, Section IV.

The petition is **GRANTED**.

A grantable petition to make an application special under 37 CFR 1.102(c)(1), MPEP § 708.02, Section IV: Applicant's Age must include a statement by applicant or a registered practitioner having evidence that applicant is at least 65 years of age. No fee is required.

Accordingly, the above-identified application has been accorded "special" status and will be taken up for action by the examiner upon the completion of all pre-examination processing.

Telephone inquiries concerning this electronic decision should be directed to the Electronic Business Center at 866-217-9197.

All other inquiries concerning either the examination or status of the application should be directed to the Technology Center.

UNITED STATES PATENT AND TRADEMARK OFFICE

Commissioner for Patents
United States Patent and Trademark Office
P.O. Box 1450
Alexandria, VA 22313-1450
www.uspto.gov

STRATEGIC PATENTS P.C..
C/O CPA Global
P.O. BOX 52050
MINNEAPOLIS MN 55402

MAILED

SEP 12 2011

OFFICE OF PETITIONS

In re Application of :
Youm :
Application No. 13/012,773 : DECISION REFUSING STATUS
Filed: January 24, 2011 : UNDER 37 CFR 1.47(b)
Attorney Docket No. **TTRS-0005-P05** :

For: **INTERACTIVE HYBRID ASYNCHRONOUS COMPUTER GAME INFRASTRUCTURE WITH DYNAMIC DIFFICULTY ADJUSTMENT**

This is a decision on the petition under 37 CFR 1.47(b), filed September 7, 2011.

The petition under 37 CFR 1.47(b) is **dismissed.**

Any request for reconsideration under this decision must be submitted within TWO (2) MONTHS from the mail date of this decision. Extensions of time under 37 CFR 1.136(a) are permitted. Failure to respond will result in the abandonment of this application. Any response should be titled "Request for Reconsideration of Petition Under 37 CFR 1.47(b).

The above-identified application was filed on January 24, 2011, and was not accompanied by a properly executed declaration under 37 CFR 1.63. A Notice to File Missing Parts of Non-Provisional Application was mailed February 9, 2011, requiring a properly executed declaration, along with other items. The instant petition was filed September 7, 2011, with an extension of time within the fifth month.

A grantable petition under 37 CFR 1.47(b) requires:

(1) proof that the non-signing inventor(s) cannot be reached or refuses to sign the oath or declaration after having been presented with the application papers (specification, claims, and drawings).

(2) an acceptable oath or declaration in compliance with 35 U.S.C. §§ 115 and 116;

(3) the petition fee,

(4) a statement of the last known address of the non-signing inventor,

(5) proof of proprietary interest, and

(6) a showing (statement) that such action is necessary to preserve the rights of the parties or to prevent irreparable damage.

The instant petition lacks item (2) set forth above.

As to item (2), the papers filed with the petition indicate that the invention disclosed in the subject application is assigned to Tetris Online, Inc. Accordingly, the petitioner is not simply a 37 CFR 1.47(b) applicant, but an assignee. Thus, the declaration filed with the instant petition cannot be accepted until the assignee demonstrates that it has the power to prosecute the application. Section 409.03(b) of the *Manual of Patent Examining Procedure* provides, in pertinent part, that, "[w]here the oath or declaration is being signed on behalf of an assignee, see MPEP 324." Section 324 of the Manual of Patent Examining Procedure cites 37 CFR 3.71(c) which states that, "[a]n assignee becomes of record either in a national patent application or a reexamination proceeding by filing a statement in compliance with 3.73(b) that is signed by a party who is authorized to act on behalf of the assignee." Petitioner should note that 37 CFR 3.73 requires that before an assignee can take action in a patent matter, the assignee must establish ownership of the patent property in accordance with 37 CFR 3.73(b)(1)(i) or (ii). No statement or certificate meeting the requirements of 37 CFR 3.73 was found with the petition. Petitioner must properly establish ownership of the patent property before the assignee will be granted authority under 37 CFR 1.47(b) to prosecute the application. Form PTO/SB/96 is enclosed for petitioner's convenience.

Further correspondence with respect to this matter should be addressed as follows:

By mail: Mail Stop Petitions
Commissioner for Patents
P.O. Box 1450
Alexandria, VA 22313-1450

By FAX: (571) 273-8300
Attn: Office of Petitions

Telephone inquiries concerning this decision should be directed to the undersigned at (571) 272-3222.

/Kenya A. McLaughlin/

Kenya A. McLaughlin
Petitions Attorney
Office of Petitions

Enclosure: Form PTO/SB/96

UNITED STATES PATENT AND TRADEMARK OFFICE

Commissioner for Patents
United States Patent and Trademark Office
P.O. Box 1450
Alexandria, VA 22313-1450
www.uspto.gov

STRATEGIC PATENTS P.C..
C/O CPA Global
P.O. BOX 52050
MINNEAPOLIS MN 55402

MAILED
SEP 27 2011
OFFICE OF PETITIONS

In re Application of :
Youm :
Application No. 13/012,773 : DECISION REFUSING STATUS
Filed: January 24, 2011 : UNDER 37 CFR 1.47(b)
Attorney Docket No. **TTRS-0005-P05** :

For: **INTERACTIVE HYBRID ASYNCHRONOUS COMPUTER GAME INFRASTRUCTURE WITH DYNAMIC DIFFICULTY ADJUSTMENT**

This is in response to the renewed petition under 37 CFR 1.47(b), filed September 20, 2011.

The petition is **GRANTED**.

The above-identified application and papers have been reviewed and found in compliance with 37 CFR 1.47(b). This application is hereby accorded Rule 1.47(b) status.

The above-identified application was filed on January 24, 2011, and was not accompanied by a properly executed declaration under 37 CFR 1.63. A Notice to File Missing Parts of Non-Provisional Application was mailed February 9, 2011, requiring a properly executed declaration, along with other items. A petition under 37 CFR 1.47(b) was filed September 7, 2011, with an extension of time within the fifth month. The petition was dismissed by a decision mailed September 12, 2011.

By the instant petition and evidentiary documents, petitioner has established that the assignee has sufficient proprietary interest to proceed with prosecution of the application without the joint inventors.

As provided in Rule 1.47(c), this Office will forward notice of this application's filing to the non-signing inventors at the addresses given in the petition. Notice of the filing of this application will also be published in the Official Gazette.

This application will be forwarded to the Office of Patent Application Processing for further review.

Telephone inquiries concerning this decision should be directed to the undersigned at (571) 272-3222.

/Kenya A. McLaughlin/

Kenya A. McLaughlin
Petitions Attorney
Office of Petitions

UNITED STATES PATENT AND TRADEMARK OFFICE

Commissioner for Patents
United States Patent and Trademark Office
P.O. Box 1450
Alexandria, VA 22313-1450
www.uspto.gov

Mr. Eui-Joon Youm
Ace Studios, Inc.
55 Merchant Street, Suite 1430
Honolulu, HI 96813

MAILED
SEP 27 2011
OFFICE OF PETITIONS

In re Application of :
Youm :
Application No. 13/012,773 : LETTER
Filed: January 24, 2011 :
Attorney Docket No. **TTRS-0005-P05** :

For: **INTERACTIVE HYBRID ASYNCHRONOUS COMPUTER GAME INFRASTRUCTURE WITH DYNAMIC DIFFICULTY ADJUSTMENT**

Dear Mr. Youm:

You are named as a joint inventor in the above-identified United States patent application filed under the provisions of 35 U.S.C. 116 (United States Code) and 37 CFR 1.47(b), Rules of Practice in Patent Cases. Should a patent be granted on the application you will be designated therein as a joint inventor.

As a joint inventor, you are entitled to inspect any paper in the file wrapper of the application, order copies of all or any part thereof (at a prepaid cost per 37 CFR 1.19) or make your position of record in the application. Alternatively, you may arrange to do any of the preceding through a registered patent attorney or agent presenting written authorization from you. If you care to join the application, counsel of record (see below) would presumably assist you. Joining in the application would entail the filing of an appropriate oath or declaration by you pursuant to 37 CFR 1.63.

Telephone inquiries regarding this communication should be directed to Petitions Attorney Kenya A. McLaughlin at (571) 272-3222. Requests for information regarding your application should be directed to the File Information Unit at (703) 308-2733. Information regarding how to pay for and order a copy of the application, or a specific paper in the application, should be directed to Certification Division at (703) 308-9726 or 1-800-972-6382 (outside the Washington D.C. area).

/Kenya a. McLaughlin/

Kenya A. McLaughlin
Petitions Attorney
Office of Petitions

STRATEGIC PATENTS P.C..
C/O CPA Global
P.O. BOX 52050
MINNEAPOLIS MN 55402

UNITED STATES PATENT AND TRADEMARK OFFICE

Commissioner for Patents
United States Patent and Trademark Office
P.O. Box 1450
Alexandria, VA 22313-1450
www.uspto.gov

**SHOTSPOTTER, INC. C/O DLA PIPER US LLP**
**ATTN: ANDREW SCHWAAB**
**2000 UNIVERSITY AVENUE**
**EAST PALO ALTO, CA 94303**

**MAILED**

AUG 19 2011

**OFFICE OF PETITIONS**

In re Application of :
Showen et al. :
Application No. 13/012,781 : ON PETITION
Filing: January 24, 2011 :
Attorney Docket No. None :

This is a decision on the petition under 37 CFR 1.102(c)(1), filed August 9, 2011, to make the above-identified application special based on applicant's age as set forth in M.P.E.P. § 708.02, Section IV.

The petition is **GRANTED**.

A grantable petition to make an application special under 37 CFR 1.102(c)(1) and MPEP § 708.02, Section IV: Applicant's Age must be accompanied by evidence showing that at least one of the applicants is 65 years of age, or more, such as a birth certificate or a statement by applicant. No fee is required.

The instant petition includes a statement (PTO/SB/130 form) by the applicant that he is 65 years of age. Accordingly, the above-identified application has been accorded "special" status.

Telephone inquiries concerning this decision should be directed to the undersigned at 571-272-6059. All other inquiries concerning either the examination or status of the application should be directed to the Technology Center.

This matter is being referred to the Technology Center Art Unit 3662 for action on the merits commensurate with this decision.

/A. Kelley-Collier/
Alicia Kelley-Collier
Petitions Examiner
Office of Petitions

UNITED STATES PATENT AND TRADEMARK OFFICE

UNITED STATES DEPARTMENT OF COMMERCE
United States Patent and Trademark Office
Address: COMMISSIONER FOR PATENTS
P.O. Box 1450
Alexandria, Virginia 22313-1450
www.uspto.gov

| APPLICATION NO. | FILING DATE | FIRST NAMED INVENTOR | ATTORNEY DOCKET NO. | CONFIRMATION NO. |
|---|---|---|---|---|
| 13/012,831 | 01/25/2011 | Theodore Winger | 060885-00371.169PCT/USCON | 7601 |

67945 7590 10/11/2011

ADVANCED LIQUID LOGIC, INC.
C/O WARD AND SMITH, P.A.
1001 COLLEGE COURT
P.O. BOX 867
NEW BERN, NC 28563-0867

| EXAMINER | |
|---|---|
| COLE, MONIQUE T | |

| ART UNIT | PAPER NUMBER |
|---|---|
| 1773 | |

| NOTIFICATION DATE | DELIVERY MODE |
|---|---|
| 10/11/2011 | ELECTRONIC |

**Please find below and/or attached an Office communication concerning this application or proceeding.**

The time period for reply, if any, is set in the attached communication.

Notice of the Office communication was sent electronically on above-indicated "Notification Date" to the following e-mail address(es):

patents@wardandsmith.com
patents@liquid-logic.com
eem@wardandsmith.com

UNITED STATES PATENT AND TRADEMARK OFFICE

Commissioner for Patents
United States Patent and Trademark Office
P.O. Box 1450
Alexandria, VA 22313-1450
www.uspto.gov

| | | |
|---|---|---|
| In re Application of | : | |
| Phuong-Nghi Lam | : | |
| Appl. No.: 13/012,831 | : | DECISION ON PETITION |
| Filed: 25 January 2011 | : | |
| For: ENZYMATIC ASSAYS USING UMBELLIFERONE SUBSTRATES WITH CYCLODEXTRINS IN DROPLETS IN OIL | : | |

This is a decision on the petition under 37 CFR § 1.48(b) filed 19 September 2011, the present petition and authorization to charge counsel's deposit account for the $130.00 petition fee were filed. Petitioners request amendment of the inventorship to delete Allen Eckhardt, Carrie Graham, Ramakrishna Sista, Vamsee Pamula, Tong Wang, Yalin Xiong, Ning Wu, Sanjay Saha, Gajendrasinh Raolji and Raveendra Dayam. Petitioners request that the actual inventorship be given as Theodore Winger.

37 CFR 1.48 Correction of inventorship states, in part:

*(b) Nonprovisional application —fewer inventors due to amendment or cancellation of claims . If the correct inventors are named in a nonprovisional application, and the prosecution of the nonprovisional application results in the amendment or cancellation of claims so that fewer than all of the currently named inventors are the actual inventors of the invention being claimed in the nonprovisional application, an amendment must be filed requesting deletion of the name or names of the person or persons who are not inventors of the invention being claimed. If the application is involved in an interference, the amendment must comply with the requirements of this section and must be accompanied by a motion under § 1.634. Amendment of the inventorship requires:*

*(1) A request, signed by a party set forth in § 1.33(b), to correct the inventorship that identifies the named inventor or inventor's being deleted and acknowledges that the inventor's invention is no longer being claimed in the nonprovisional application; and*

*(2) The processing fee set forth in § 1.17(i).*

A review of the record reveals that petitioner has complied with all the conditions in 37 CFR § 1.48(b). The petition is granted. A corrected filing receipt naming the actual inventor of the above-identified patent, namely, Theodore Winger, will be issued.

**PETITION GRANTED**

Jill Warden
Supervisory Patent Examiner

UNITED STATES PATENT AND TRADEMARK OFFICE

UNITED STATES DEPARTMENT OF COMMERCE
United States Patent and Trademark Office
Address: COMMISSIONER FOR PATENTS
P.O. Box 1450
Alexandria, Virginia 22313-1450
www.uspto.gov

| APPLICATION NO. | FILING DATE | FIRST NAMED INVENTOR | ATTORNEY DOCKET NO. | CONFIRMATION NO. |
|---|---|---|---|---|
| 13/012,831 | 01/25/2011 | Theodore Winger | 060885-00371.169PCT/USCON | 7601 |

67945 7590 10/14/2011

ADVANCED LIQUID LOGIC, INC.
C/O WARD AND SMITH, P.A.
1001 COLLEGE COURT
P.O. BOX 867
NEW BERN, NC 28563-0867

| EXAMINER | |
|---|---|
| COLE, MONIQUE T | |
| **ART UNIT** | **PAPER NUMBER** |
| 1773 | |

| NOTIFICATION DATE | DELIVERY MODE |
|---|---|
| 10/14/2011 | ELECTRONIC |

**Please find below and/or attached an Office communication concerning this application or proceeding.**

The time period for reply, if any, is set in the attached communication.

Notice of the Office communication was sent electronically on above-indicated "Notification Date" to the following e-mail address(es):

patents@wardandsmith.com
patents@liquid-logic.com
eem@wardandsmith.com

UNITED STATES PATENT AND TRADEMARK OFFICE

Commissioner for Patents
United States Patent and Trademark Office
P.O. Box 1450
Alexandria, VA 22313-1450
www.uspto.gov

In re Application of :
Phuong-Nghi Lam :
Appl. No.: 13/012,831 : DECISION ON PETITION
Filed: 25 January 2011 :
For: ENZYMATIC ASSAYS USING :
UMBELLIFERONE SUBSTRATES WITH :
CYCLODEXTRINS IN DROPLETS IN OIL :

This is a decision on the petition under 37 CFR § 1.48(b) filed 19 September 2011, the present petition and authorization to charge counsel's deposit account for the $130.00 petition fee were filed. Petitioners request amendment of the inventorship to delete Allen Eckhardt, Carrie Graham, Ramakrishna Sista, Vamsee Pamula, Tong Wang, Yalin Xiong, Ning Wu, Sanjay Saha, Gajendrasinh Raolji and Raveendra Dayam. Petitioners request that the actual inventorship be given as Theodore Winger.

37 CFR 1.48 Correction of inventorship states, in part:

*(b) Nonprovisional application —fewer inventors due to amendment or cancellation of claims . If the correct inventors are named in a nonprovisional application, and the prosecution of the nonprovisional application results in the amendment or cancellation of claims so that fewer than all of the currently named inventors are the actual inventors of the invention being claimed in the nonprovisional application, an amendment must be filed requesting deletion of the name or names of the person or persons who are not inventors of the invention being claimed. If the application is involved in an interference, the amendment must comply with the requirements of this section and must be accompanied by a motion under § 1.634. Amendment of the inventorship requires:*

*(1) A request, signed by a party set forth in § 1.33(b), to correct the inventorship that identifies the named inventor or inventor's being deleted and acknowledges that the inventor's invention is no longer being claimed in the nonprovisional application; and*

*(2) The processing fee set forth in § 1.17(i).*

A review of the record reveals that petitioner has complied with all the conditions in 37 CFR § 1.48(b). The petition is granted. A corrected filing receipt naming the actual inventor of the above-identified patent, namely, Theodore Winger, will be issued.

**PETITION GRANTED**

Jill Warden
Supervisory Patent Examiner

UNITED STATES PATENT AND TRADEMARK OFFICE

Commissioner for Patents
United States Patent and Trademark Office
P.O. Box 1450
Alexandria, VA 22313-1450
www.uspto.gov

**MOMKUS MCCLUSKEY, LLC**
**1001 WARRENVILLE ROAD, SUITE 500**
**LISLE IL 60532**

**MAILED**

JAN 13 2012

**OFFICE OF PETITIONS**

| | | |
|---|---|---|
| In re Application of | : | |
| RAMADURAI, et al | : | |
| Application No. 13/012,889 | : | DECISION ON PETITION |
| Filed: January 25, 2011 | : | TO WITHDRAW |
| Attorney Docket No. 33176.000072 | : | FROM RECORD |
| | : | |

This is a decision on the Request to Withdraw as attorney or agent under 37 C.F.R. § 1.36(b) filed November 30, 2011.

The request is **NOT APPROVED**.

A review of the file record indicates that Jefferson Perkins does not have power of attorney in this patent application. See 37 C.F.R. § 10.40. Accordingly, the request to withdraw under 37 C.F.R. § 1.36(b) is not applicable.

The Office will no longer approve requests from practitioners to withdraw from applications where the requesting practitioner is acting, or has acted, in a representative capacity pursuant to 37 CFR 1.34. In these situations, the practitioner is responsible for the correspondence the practitioner files in the application while acting in a representative capacity. As such, there is no need for the practitioner to obtain the Office's permission to withdraw from representation. However, practitioners acting in a representative capacity, like practitioners who have a power of attorney in the application, remain responsible for noncompliance with 37 CFR 1.56, as well as 37 CFR 10.18, with respect to documents they file.

All future communications from the Office will continue to be directed to the above-identified address until otherwise properly notified.

Telephone inquires concerning this decision should be directed to the undersigned at (571) 272-6735.

/Diane Goodwyn/
Diane Goodwyn
Petitions Examiner
Office of Petitions

cc: EPIR TECHNOLOGIES, INC.
590 TERRITORIAL DRIVE, UNIT B
BOLINGBROOK, IL 60440

UNITED STATES PATENT AND TRADEMARK OFFICE

Commissioner for Patents
United States Patent and Trademark Office
P.O. Box 1450
Alexandria, VA 22313-1450
www.uspto.gov

**MEDTRONIC, INC. (CRDM)**
**710 MEDTRONIC PARKWAY NE**
**MS: LC340 LEGAL PATENTS**
**MINNEAPOLIS, MN 55432-9924**

MAILED
AUG 02 2011
OFFICE OF PETITIONS

In re Application of
Kast et al.
Application No. 13/012,957
Filed: January 25, 2011
Attorney Docket No. P0035736.01/LG10137

: DECISION ON PETITION
: UNDER 37 CFR 1.78(a)(6)

This is a decision on the petition under 37 CFR 1.78(a)(6), filed July 15, 2011, to accept an unintentionally delayed claim under 35 U.S.C. § 119(e) for the benefit of prior-filed provisional Application No. 61/299,156, set forth in the amendment filed concurrently with the instant petition.

The petition is **DISMISSED**.

A petition under 37 CFR 1.78(a)(6) is only applicable to those applications filed on or after November 29, 2000. Further, the petition is appropriate only after expiration of the period specified in 37 CFR 1.78(a)(5)(ii) and must be filed during the pendency of the nonprovisional application. In addition, the petition must be accompanied by:

(1) the reference required by 35 U.S.C. § 119(e) and 37 CFR 1.78(a)(5)(i) to the prior-filed application, unless previously submitted;
(2) the surcharge set forth in § 1.17(t); and
(3) a statement that the entire delay between the date the claim was due under 37 CFR 1.78(a)(5)(ii) and the date the claim was filed was unintentional. The Commissioner may require additional information where there is a question whether the delay was unintentional.

The instant nonprovisional application was filed on January 25, 2011 and was pending at the time of filing of the instant petition. The instant application was filed on January 25, 2011, within twelve months of the filing date of the prior-filed provisional application, Application No. 61/299,156, which was filed on January 28, 2010 and for which priority is claimed. A reference to the prior-filed applications has been included in an amendment to the first sentence of the specification following the title, as required by 37 CFR §1.78(a)(5)(iii).

However, the amendment is not acceptable as drafted since it improperly incorporates by reference the prior-filed application. Petitioner's attention is directed to Dart Industries v. Banner, 636 F.2d 684, 207 USPQ 273 (C.A.D.C. 1980), where the court drew a distinction between a permissible 35 U.S.C. § 120 statement and the impermissible introduction of new matter by way of incorporation by reference in a 35 U.S.C. § 120 statement. The court specifically stated:

> Section 120 merely provides a mechanism whereby an application becomes entitled to benefit of the filing date of an earlier application disclosing the same subject matter. Common subject matter must be disclosed, in both applications, either specifically or by an express incorporation-by-reference of prior disclosed subject matter. Nothing in section 120 itself operates to carry forward any disclosure from an earlier application. In re deSeversky, supra at 674, 177 USPQ at 146-147. Section 120 contains no magical disclosure-augmenting powers able to pierce new matter barriers. It cannot, therefore, "limit" the absolute and express prohibition against new matter contained in section 251.

In order for the incorporation by reference statement to be effective as a proper safeguard against the omission of a portion of a prior application, the incorporation by reference statement must be included in the specification-as-filed, or in an amendment specifically referred to in an oath or declaration executing the application. *See* In re deSeversky, *supra*. *Note also* MPEP 201.06(c).

Accordingly, before the petition under 37 CFR 1.78(a)(6) can be granted, a substitute amendment[1] deleting the incorporation by reference statement, along with a renewed petition under 37 CFR 1.78(a)(6), is required.

Further correspondence with respect to this matter should be addressed as follows:

| | |
|---|---|
| By mail: | Mail Stop PETITIONS<br>Commissioner for Patents<br>Post Office Box 1450<br>Alexandria, VA 22313-1450 |
| By hand: | Customer Window located at:<br>U.S. Patent and Trademark Office<br>Customer Service Window Randolph Building<br>401 Dulany Street<br>Alexandria, VA 22314 |
| By fax: | (571) 273-8300<br>ATTN: Office of Petitions |
| By Internet: | EFS-Web |

Any questions concerning this matter may be directed to Alicia Kelley-Collier at (571) 272-6059.

/Carl Friedman/
Carl Friedman
Petitions Examiner
Office of Petitions

---

[1] *Note* 37 CFR 1.121

UNITED STATES PATENT AND TRADEMARK OFFICE

Commissioner for Patents
United States Patent and Trademark Office
P.O. Box 1450
Alexandria, VA 22313-1450
www.uspto.gov

MEDTRONIC, INC. (CRDM)
710 MEDTRONIC PARKWAY NE
MS: LC340 LEGAL PATENTS
MINNEAPOLIS MN 55432-9924

MAILED
JAN 31 2012
OFFICE OF PETITIONS

In re Application of :
John E. Kast et al :
Application No. 13/012,957 : DECISION ON PETITION
Filed: January 25, 2011 : UNDER 37 CFR 1.78(a)(6)
Attorney Docket No. P0035736.01 / LG10137 :

This is a decision on the petition filed November 17, 2011, which is being treated as a petition under 37 CFR 1.78(a)(6), to accept an unintentionally delayed claim under 35 U.S.C. §119(e) for the benefit of the prior-filed provisional application set forth in the concurrently filed amendment.

The petition is **GRANTED.**

A petition under 37 CFR 1.78(a)(6) is only applicable to those applications filed on or after November 29, 2000. Further, the petition is appropriate only after expiration of the period specified in 37 CFR 1.78(a)(5)(ii) and must be filed during the pendency of the nonprovisional application. In addition, the petition must be accompanied by:

(1) the reference required by 35 U.S.C. § 119(e) and 37 CFR 1.78(a)(5)(i) to the prior-filed application, unless previously submitted;
(2) the surcharge set forth in § 1.17(t); and
(3) a statement that the entire delay between the date the claim was due under 37 CFR 1.78(a)(5)(ii) and the date the claim was filed was unintentional. The Director may require additional information where there is a question whether the delay was unintentional.

Additionally, the instant nonprovisional application must be pending at the time of filing of the reference to the prior-filed provisional application as required by 37 CFR 1.78(a)(5)(ii). Further, the nonprovisional application claiming the benefit of the prior-filed provisional application must have been filed within twelve months of the filing date of the prior-filed provisional application.

All of the above requirements having been satisfied, the late claim for priority under 35 U.S.C. § 119(e) is accepted as being unintentionally delayed.

***The granting of the petition to accept the delayed benefit claim to the prior-filed application under 37 CFR 1.78(a)(6) should not be construed as meaning that this application is entitled to the benefit of the filing date of the prior-filed application. In order for this application to be entitled to the benefit of the prior-filed application, all other requirements under 35 U.S.C. §119(e) and 37 CFR 1.78(a)(4) and (a)(5) must be met. Similarly, the fact that the corrected Filing Receipt accompanying this decision on petition includes the prior-filed application should not be construed as meaning that applicant is entitled to the claim for benefit of priority to the prior-filed application noted thereon. Accordingly, the examiner will, in due course, consider this benefit claim and determine whether the application is entitled to the benefit of the earlier filing date.***

A corrected Filing Receipt, which includes the priority claim to the prior-filed provisional application, accompanies this decision on petition.

Any inquiries concerning this decision may be directed to Irvin Dingle at (571) 272-3210. All other inquiries concerning either the examination procedures or status of the application should be directed to the Technology Center.

The application is being forwarded to Technology Center AU 3766 for consideration by the examiner of the claim under 35 U.S.C. §119(e) for the benefit of priority to the prior-filed provisional application.

/David Bucci/
Petition Examiner
Office of Petitions

**ATTACHMENT**: Corrected Filing Receipt

UNITED STATES PATENT AND TRADEMARK OFFICE

UNITED STATES DEPARTMENT OF COMMERCE
United States Patent and Trademark Office
Address: COMMISSIONER FOR PATENTS
P.O. Box 1450
Alexandria, Virginia 22313-1450
www.uspto.gov

| APPLICATION NUMBER | FILING or 371(c) DATE | GRP ART UNIT | FIL FEE REC'D | ATTY.DOCKET.NO | TOT CLAIMS | IND CLAIMS |
|---|---|---|---|---|---|---|
| 13/012,957 | 01/25/2011 | 3766 | 1090 | P0035736.01 / LG10137 | 20 | 3 |

**CONFIRMATION NO. 7844**

**CORRECTED FILING RECEIPT**

27581
Medtronic, Inc. (CRDM)
710 MEDTRONIC PARKWAY NE
MS: LC340 Legal Patents
MINNEAPOLIS, MN 55432-9924

Date Mailed: 01/30/2012

Receipt is acknowledged of this non-provisional patent application. The application will be taken up for examination in due course. Applicant will be notified as to the results of the examination. Any correspondence concerning the application must include the following identification information: the U.S. APPLICATION NUMBER, FILING DATE, NAME OF APPLICANT, and TITLE OF INVENTION. Fees transmitted by check or draft are subject to collection. Please verify the accuracy of the data presented on this receipt. **If an error is noted on this Filing Receipt, please submit a written request for a Filing Receipt Correction. Please provide a copy of this Filing Receipt with the changes noted thereon. If you received a "Notice to File Missing Parts" for this application, please submit any corrections to this Filing Receipt with your reply to the Notice. When the USPTO processes the reply to the Notice, the USPTO will generate another Filing Receipt incorporating the requested corrections**

**Applicant(s)**

John E. KAST, Hugo, MN;
Darren A. Janzig, Center City, MN;
Chris J. Paidosh, St. Anthony, MN;
Andrew J. Thom, Maple Grove, MN;
Brad C. Tischendorf, Minneapolis, MN;
Gerald G. Lindner, Lino Lakes, MN;

**Assignment For Published Patent Application**

MEDTRONIC, INC., Minneapolis, MN

**Power of Attorney:** The patent practitioners associated with Customer Number 27581

**Domestic Priority data as claimed by applicant**

This appln claims benefit of 61/299,156 01/28/2010

**Foreign Applications** (You may be eligible to benefit from the **Patent Prosecution Highway** program at the USPTO. Please see http://www.uspto.gov for more information.)

**If Required, Foreign Filing License Granted:** 02/07/2011

The country code and number of your priority application, to be used for filing abroad under the Paris Convention, is **US 13/012,957**

**Projected Publication Date:** Not Applicable

**Non-Publication Request:** No

**Early Publication Request:** No

**Title**

LEAD CONNECTOR WITH GLASS INSULATORS

**Preliminary Class**

607

## PROTECTING YOUR INVENTION OUTSIDE THE UNITED STATES

Since the rights granted by a U.S. patent extend only throughout the territory of the United States and have no effect in a foreign country, an inventor who wishes patent protection in another country must apply for a patent in a specific country or in regional patent offices. Applicants may wish to consider the filing of an international application under the Patent Cooperation Treaty (PCT). An international (PCT) application generally has the same effect as a regular national patent application in each PCT-member country. The PCT process **simplifies** the filing of patent applications on the same invention in member countries, but **does not result** in a grant of "an international patent" and does not eliminate the need of applicants to file additional documents and fees in countries where patent protection is desired.

Almost every country has its own patent law, and a person desiring a patent in a particular country must make an application for patent in that country in accordance with its particular laws. Since the laws of many countries differ in various respects from the patent law of the United States, applicants are advised to seek guidance from specific foreign countries to ensure that patent rights are not lost prematurely.

Applicants also are advised that in the case of inventions made in the United States, the Director of the USPTO must issue a license before applicants can apply for a patent in a foreign country. The filing of a U.S. patent application serves as a request for a foreign filing license. The application's filing receipt contains further information and guidance as to the status of applicant's license for foreign filing.

Applicants may wish to consult the USPTO booklet, "General Information Concerning Patents" (specifically, the section entitled "Treaties and Foreign Patents") for more information on timeframes and deadlines for filing foreign patent applications. The guide is available either by contacting the USPTO Contact Center at 800-786-9199, or it can be viewed on the USPTO website at http://www.uspto.gov/web/offices/pac/doc/general/index.html.

For information on preventing theft of your intellectual property (patents, trademarks and copyrights), you may wish to consult the U.S. Government website, http://www.stopfakes.gov. Part of a Department of Commerce initiative, this website includes self-help "toolkits" giving innovators guidance on how to protect intellectual property in specific countries such as China, Korea and Mexico. For questions regarding patent enforcement issues, applicants may call the U.S. Government hotline at 1-866-999-HALT (1-866-999-4158).

## LICENSE FOR FOREIGN FILING UNDER

## Title 35, United States Code, Section 184

## Title 37, Code of Federal Regulations, 5.11 & 5.15

**GRANTED**

The applicant has been granted a license under 35 U.S.C. 184, if the phrase "IF REQUIRED, FOREIGN FILING LICENSE GRANTED" followed by a date appears on this form. Such licenses are issued in all applications where the conditions for issuance of a license have been met, regardless of whether or not a license may be required as

set forth in 37 CFR 5.15. The scope and limitations of this license are set forth in 37 CFR 5.15(a) unless an earlier license has been issued under 37 CFR 5.15(b). The license is subject to revocation upon written notification. The date indicated is the effective date of the license, unless an earlier license of similar scope has been granted under 37 CFR 5.13 or 5.14.

This license is to be retained by the licensee and may be used at any time on or after the effective date thereof unless it is revoked. This license is automatically transferred to any related applications(s) filed under 37 CFR 1.53(d). This license is not retroactive.

The grant of a license does not in any way lessen the responsibility of a licensee for the security of the subject matter as imposed by any Government contract or the provisions of existing laws relating to espionage and the national security or the export of technical data. Licensees should apprise themselves of current regulations especially with respect to certain countries, of other agencies, particularly the Office of Defense Trade Controls, Department of State (with respect to Arms, Munitions and Implements of War (22 CFR 121-128)); the Bureau of Industry and Security, Department of Commerce (15 CFR parts 730-774); the Office of Foreign AssetsControl, Department of Treasury (31 CFR Parts 500+) and the Department of Energy.

**NOT GRANTED**

No license under 35 U.S.C. 184 has been granted at this time, if the phrase "IF REQUIRED, FOREIGN FILING LICENSE GRANTED" DOES NOT appear on this form. Applicant may still petition for a license under 37 CFR 5.12, if a license is desired before the expiration of 6 months from the filing date of the application. If 6 months has lapsed from the filing date of this application and the licensee has not received any indication of a secrecy order under 35 U.S.C. 181, the licensee may foreign file the application pursuant to 37 CFR 5.15(b).

---


## *SelectUSA*

The United States represents the largest, most dynamic marketplace in the world and is an unparalleled location for business investment, innovation and commercialization of new technologies. The USA offers tremendous resources and advantages for those who invest and manufacture goods here. Through SelectUSA, our nation works to encourage, facilitate, and accelerate business investment. To learn more about why the USA is the best country in the world to develop technology, manufacture products, and grow your business, visit SelectUSA.gov.

| | |
|---|---|
| **Doc Code: PET.AUTO**<br>**Document Description: Petition automatically granted by EFS-Web** | PTO/SB/83<br>U.S. Patent and Trademark Office<br>Department of Commerce |

| | |
|---|---|
| Electronic Petition Request | **REQUEST FOR WITHDRAWAL AS ATTORNEY OR AGENT AND CHANGE OF CORRESPONDENCE ADDRESS** |
| Application Number | 13012990 |
| Filing Date | 25-Jan-2011 |
| First Named Inventor | Benjamin Coleman |
| Art Unit | 3721 |
| Examiner Name | |
| Attorney Docket Number | 03084-2 |
| Title | FOLDING PATTERN |

◉ Please withdraw me as attorney or agent for the above identified patent application and the practitioners of record associated with Customer Number: 000987

The reason(s) for this request are those described in 37 CFR:

10.40(c)(5)

Certifications

☒ I/We have given reasonable notice to the client, prior to the expiration of the response period, that the practitioner(s) intend to withdraw from employment

☒ I/We have delivered to the client or a duly authorized representative of the client all papers and property (including funds) to which the client is entitled

☒ I/We have notified the client of any responses that may be due and the time frame within which the client must respond

Change the correspondence address and direct all future correspondence to the first named inventor or assignee that has properly made itself of record pursuant to 37 CFR 3.71:

| | |
|---|---|
| Name | Benjamin John Coleman The Origami Bonsai Company |
| Address | 595 Mineral Spring Avenue, Suite 15 |
| City | Pawtucket |
| State | RI |
| Postal Code | 02860 |
| Country | US |

| I am authorized to sign on behalf of myself and all withdrawing practitioners. | |
|---|---|
| Signature | /David M. Driscoll/ |
| Name | David M. Driscoll |
| Registration Number | 25075 |

UNITED STATES PATENT AND TRADEMARK OFFICE

Commissioner for Patents
United States Patent and Trademark Office
P.O. Box 1450
Alexandria, VA 22313-1450
www.uspto.gov

Decision Date : May 20,2011

In re Application of :

Benjamin Coleman

Application No : 13012990

Filed : 25-Jan-2011

Attorney Docket No : 03084-2

DECISION ON REQUEST TO WITHDRAW AS ATTORNEY/AGENTOF RECORD

This is an electronic decision on the Request to Withdraw as attorney or agent of record under 37 CFR § 1.36(b), filed May 20,2011

The request is **APPROVED.**

The request was signed by David M. Driscoll (registration no. 25075 ) on behalf of all attorneys/agents associated with Customer Number 000987 . All attorneys/agents associated with Cusotmer Number 000987 have been withdrawn.

Since there are no remaining attorneys of record, all future communications from the Office will be directed to the first named inventor or assignee that has properly made itself of record pursuant to 37 CFR 3.71, with correspondence address:

| | |
|---|---|
| Name | Benjamin John Coleman |
| Name2 | The Origami Bonsai Company |
| Address 1 | 595 Mineral Spring Avenue, Suite 15 |
| Address 2 | |
| City | Pawtucket |
| State | RI |
| Postal Code | 02860 |
| Country | US |

As a reminder, requester is required to inform the first named inventor or assignee that has properly made itself of record pursuant to 37 CFR 3.71 of the electronically processed petition.

Telephone inquiries concerning this decision should be directed to the Patent Electronic Business Center (EBC) at 866-217-9197.

Office of Petitions

UNITED STATES PATENT AND TRADEMARK OFFICE

Commissioner for Patents
United States Patent and Trademark Office
P.O. Box 1450
Alexandria, VA 22313-1450
www.uspto.gov

GE HEALTHCARE BIO-SCIENCES CORP.
MELISSA LECK
101 CARNEGIE CENTER
PATENT DEPARTMENT
PRINCETON NJ 08540

MAILED

MAY 17 2011

OFFICE OF PETITIONS

In re Application of :
Andres Larsson et al. :
Application No. 13/013,069 : DECISION ON PETITION
Filed: January 25, 2011 :
Attorney Docket No. **PU0776** :

This is a decision on the petition under 37 CFR 1.182, filed, March 15, 2011, to change the name of inventor "Sophia Soderberg" to –Sofia Hiort af Ornas --.

The petition is **GRANTED**.

Office records have been updated to reflect the inventor's change of name. A corrected Filing Receipt, which reflects the inventor's change of name, accompanies this decision on petition.

When changes are being made to information supplied in a previously filed Oath or Declaration applicants are strongly encouraged to submit a supplemental application data sheet (ADS) showing the change of the inventors names. The newly submitted application data sheet (ADS) must be titled "Supplemental Application Data Sheet". See 37 CFR 1.76(c)(2) and MPEP § 605.04(c).

The fee for a petition under 37 CFR 1.182 to change the order of the names of the inventors is $400. However, the $130 petition fee submitted will be applied towards the $400 petition fee. Therefore, the balance of $270 will be charged to petitioner's deposit account as authorized.

Any questions concerning this matter may be directed to JoAnne Burke at (571) 272-4584. Any questions concerning the examination procedures or status of the application should be directed to the Technology Center.

This application is being referred to Technology Center AU 1724 for the normal course of business.

JoAnne Burke
Petitions Examiner
Office of Petitions

ATTACHMENT: Corrected Filing Receipt

UNITED STATES PATENT AND TRADEMARK OFFICE

UNITED STATES DEPARTMENT OF COMMERCE
United States Patent and Trademark Office
Address: COMMISSIONER FOR PATENTS
P.O. Box 1450
Alexandria, Virginia 22313-1450
www.uspto.gov

| APPLICATION NUMBER | FILING or 371(c) DATE | GRP ART UNIT | FIL FEE REC'D | ATTY.DOCKET.NO | TOT CLAIMS | IND CLAIMS |
|---|---|---|---|---|---|---|
| 13/013,069 | 01/25/2011 | 1724 | 1090 | PU0346-US CON | 12 | 2 |

**CONFIRMATION NO. 8056**

**CORRECTED FILING RECEIPT**

22840
GE HEALTHCARE BIO-SCIENCES CORP.
MELISSA LECK
101 CARNEGIE CENTER
PATENT DEPARTMENT
PRINCETON, NJ 08540

*OC000000047606030*

Date Mailed: 05/11/2011

Receipt is acknowledged of this non-provisional patent application. The application will be taken up for examination in due course. Applicant will be notified as to the results of the examination. Any correspondence concerning the application must include the following identification information: the U.S. APPLICATION NUMBER, FILING DATE, NAME OF APPLICANT, and TITLE OF INVENTION. Fees transmitted by check or draft are subject to collection. Please verify the accuracy of the data presented on this receipt. **If an error is noted on this Filing Receipt, please submit a written request for a Filing Receipt Correction. Please provide a copy of this Filing Receipt with the changes noted thereon. If you received a "Notice to File Missing Parts" for this application, please submit any corrections to this Filing Receipt with your reply to the Notice. When the USPTO processes the reply to the Notice, the USPTO will generate another Filing Receipt incorporating the requested corrections**

**Applicant(s)**

ANDERS LARSSON, UPPSALA, SWEDEN;
RONNIE PALMGREN, UPPSALA, SWEDEN;
SOFIA HIORT AF ORNAS, STOCKHOLM, SWEDEN;

**Assignment For Published Patent Application**

GE HEALTHCARE BIO-SCIENCES AB, UPPSALA, SWEDEN

**Power of Attorney:** The patent practitioners associated with Customer Number 22840

**Domestic Priority data as claimed by applicant**

This application is a CON of 10/555,236 11/01/2005 ABN
which is a 371 of PCT/SE2004/000803 05/25/2004

**Foreign Applications** (You may be eligible to benefit from the **Patent Prosecution Highway** program at the USPTO. Please see http://www.uspto.gov for more information.)
SWEDEN 0301592-2 05/28/2003

**If Required, Foreign Filing License Granted:** 02/07/2011

The country code and number of your priority application, to be used for filing abroad under the Paris Convention, is **US 13/013,069**

**Projected Publication Date:** 05/19/2011

**Non-Publication Request:** No

**Early Publication Request:** No

**Title**

ELECTROPHORETIC SUPPORT

**Preliminary Class**

204

## PROTECTING YOUR INVENTION OUTSIDE THE UNITED STATES

Since the rights granted by a U.S. patent extend only throughout the territory of the United States and have no effect in a foreign country, an inventor who wishes patent protection in another country must apply for a patent in a specific country or in regional patent offices. Applicants may wish to consider the filing of an international application under the Patent Cooperation Treaty (PCT). An international (PCT) application generally has the same effect as a regular national patent application in each PCT-member country. The PCT process **simplifies** the filing of patent applications on the same invention in member countries, but **does not result** in a grant of "an international patent" and does not eliminate the need of applicants to file additional documents and fees in countries where patent protection is desired.

Almost every country has its own patent law, and a person desiring a patent in a particular country must make an application for patent in that country in accordance with its particular laws. Since the laws of many countries differ in various respects from the patent law of the United States, applicants are advised to seek guidance from specific foreign countries to ensure that patent rights are not lost prematurely.

Applicants also are advised that in the case of inventions made in the United States, the Director of the USPTO must issue a license before applicants can apply for a patent in a foreign country. The filing of a U.S. patent application serves as a request for a foreign filing license. The application's filing receipt contains further information and guidance as to the status of applicant's license for foreign filing.

Applicants may wish to consult the USPTO booklet, "General Information Concerning Patents" (specifically, the section entitled "Treaties and Foreign Patents") for more information on timeframes and deadlines for filing foreign patent applications. The guide is available either by contacting the USPTO Contact Center at 800-786-9199, or it can be viewed on the USPTO website at http://www.uspto.gov/web/offices/pac/doc/general/index.html.

For information on preventing theft of your intellectual property (patents, trademarks and copyrights), you may wish to consult the U.S. Government website, http://www.stopfakes.gov. Part of a Department of Commerce initiative, this website includes self-help "toolkits" giving innovators guidance on how to protect intellectual property in specific countries such as China, Korea and Mexico. For questions regarding patent enforcement issues, applicants may call the U.S. Government hotline at 1-866-999-HALT (1-866-999-4158).

## LICENSE FOR FOREIGN FILING UNDER

## Title 35, United States Code, Section 184

## Title 37, Code of Federal Regulations, 5.11 & 5.15

**GRANTED**

The applicant has been granted a license under 35 U.S.C. 184, if the phrase "IF REQUIRED, FOREIGN FILING LICENSE GRANTED" followed by a date appears on this form. Such licenses are issued in all applications where the conditions for issuance of a license have been met, regardless of whether or not a license may be required as

set forth in 37 CFR 5.15. The scope and limitations of this license are set forth in 37 CFR 5.15(a) unless an earlier license has been issued under 37 CFR 5.15(b). The license is subject to revocation upon written notification. The date indicated is the effective date of the license, unless an earlier license of similar scope has been granted under 37 CFR 5.13 or 5.14.

This license is to be retained by the licensee and may be used at any time on or after the effective date thereof unless it is revoked. This license is automatically transferred to any related applications(s) filed under 37 CFR 1.53(d). This license is not retroactive.

The grant of a license does not in any way lessen the responsibility of a licensee for the security of the subject matter as imposed by any Government contract or the provisions of existing laws relating to espionage and the national security or the export of technical data. Licensees should apprise themselves of current regulations especially with respect to certain countries, of other agencies, particularly the Office of Defense Trade Controls, Department of State (with respect to Arms, Munitions and Implements of War (22 CFR 121-128)); the Bureau of Industry and Security, Department of Commerce (15 CFR parts 730-774); the Office of Foreign AssetsControl, Department of Treasury (31 CFR Parts 500+) and the Department of Energy.

**NOT GRANTED**

No license under 35 U.S.C. 184 has been granted at this time, if the phrase "IF REQUIRED, FOREIGN FILING LICENSE GRANTED" DOES NOT appear on this form. Applicant may still petition for a license under 37 CFR 5.12, if a license is desired before the expiration of 6 months from the filing date of the application. If 6 months has lapsed from the filing date of this application and the licensee has not received any indication of a secrecy order under 35 U.S.C. 181, the licensee may foreign file the application pursuant to 37 CFR 5.15(b).

**Doc Code: PET.GREEN**
**Document Description: Petition for Green Tech Pilot**

PTO/SB/420 (11-10)
Approved for use through 01/31/2011. OMB 0651-0062
U.S. Patent and Trademark Office; U.S. DEPARTMENT OF COMMERCE
Under the Paperwork Reduction Act of 1995, no persons are required to respond to a collection of information unless it displays a valid OMB control number.

# PETITION TO MAKE SPECIAL UNDER THE GREEN TECHNOLOGY PILOT PROGRAM

| | | | | | |
|---|---|---|---|---|---|
| Attorney Docket Number: | 30766/45543 | Application Number (if known): | Not Yet Assigned | Filing date: | January 25, 2011 (Herewith) |
| First Named Inventor: | Emily Charlotte Boswell | | | | |
| Title: | SUSTAINABLE PACKAGING FOR CONSUMER PRODUCTS | | | | |

**APPLICANT HEREBY REQUESTS TO PARTICIPATE IN THE GREEN TECHNOLOGY PILOT PROGRAM FOR THE ABOVE-IDENTIFIED APPLICATION. See Instruction Sheet on page 2.**

This petition must be timely filed electronically using the USPTO electronic filing system, EFS-Web.

1. By filing this petition:

   **Applicant is requesting early publication: Applicant hereby requests early publication under 37 CFR 1.219 and the publication fee set forth in 37 CFR 1.18(d) accompanies this request.**

2. By filing this petition: applicant is agreeing to make an election without traverse in a telephonic interview and elect an invention that meets the eligibility requirements for the Green Technology Pilot Program, if the Office determines that the claims are not obviously directed to a single invention. See Instruction Sheet.

3. This request is accompanied by statements of special status for the eligibility requirement.

4. The application contains no more than three (3) independent claims and twenty (20) total claims.

5. The application does not contain any multiple dependent claims.

6. Other attachments:

| | | | |
|---|---|---|---|
| Signature | 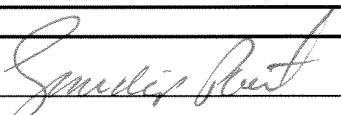 | Date | January 25, 2011 |
| Name (Print/Typed) | Sandip H. Patel | Registration Number | 43,848 |

***Note**: Signatures of all the inventors or assignees of record of the entire interest or their representative(s) are required in accordance with 37 CFR 1.33 and 11.18. Please see 37 CFR 1.4(d) for the form of the signature. If necessary, submit multiple forms if more than one signature, see below*.*

☐ *Total of 1 forms are submitted.

PATENT

**IN THE UNITED STATES PATENT AND TRADEMARK OFFICE**

| | |
|---|---|
| In re Patent Application of: Boswell et al. | Confirmation No.: To be assigned |
| | Art Unit: To be assigned |
| Application No.: To be assigned | Examiner: To be assigned |
| Filed: January 25, 2011 (herewith) | Attorney Docket No.: 30766/45543 |
| For: Sustainable Packaging For Consumer Products | |

**STATEMENT OF SPECIAL STATUS**

Commissioner for Patents
P.O. Box 1450
Alexandria, Virginia 22313-1450

Dear Sir:

This paper accompanies the applicants' request to participate in, and petition to make special under, the green technology pilot program (Form PTO/SB/420) as set forth in U.S. Patent and Trademark Office notices published at 74 FED. REG. 64666-69 (Dec. 8, 2009) (hereinafter the "2009 Notice") and 75 FED. REG. 69049-50 (Nov. 10, 2010). On behalf the applicants, the undersigned states the following:

**1.** The above-captioned application, filed herewith pursuant to 35 USC § 111(a), is a non-reissue, non-provisional utility application.

**2.** As of the accompanying petition's filing date, the applicants do not know the classification of the application; however, the applicants respectfully submit that the application may be classified under one or more of the class/subclasses set forth in Section VI.D.1 and VI.D.4 of the 2009 Notice:

> **D. Environmental Purification, Protection, or Remediation**
>
> 1. Biodegradable (USPC 383/1; 523/124-128; 525/938; 526/914).
>
> * * * *
>
> 4. Carbon capture or sequestration (USPC 95/139-140; 405*129.1-129.95; 423/220-234).

*See* the 2009 Notice at 64669.

3. The application is being filed concurrently with a preliminary amendment which, upon entry, will result in the application including three independent claims, twenty total claims, and no multiple dependent claims.

4. Special status is sought because the application is directed to a single invention that materially contributes to more efficient utilization and conservation of energy resources and the reduction of greenhouse gas emissions. More specifically, the invention is directed to sustainable articles that include a container, cap, and label, which are substantially free of petroleum-based compounds. Because at least part of these articles is derived from a renewable resource, which can sequester carbon dioxide, use of the articles can reduce global warming potential and fossil fuel consumption. For example, a decrease of up to about five tons of environmental carbon dioxide can be realized by substituting one ton of renewable high density polyethylene (HDPE) resin in the place of one ton of petroleum-based HDPE resin that is traditionally used to make prior art articles. If the Patent Office determines that the claims are directed to multiple inventions, the applicants will make an election without traverse in a telephonic interview, and elect an invention that meets the eligibility requirement in Sections II or III of the 2009 Notice and is classified in one of the US classifications listed in Section IV of the 2009 Notice.

5. The accompanying petition was prepared using Form PTO/SB/420, and is being filed electronically using the Patent Office's electronic filing system.

6. The accompanying petition is being filed concurrently with the above-captioned application and, therefore, is being filed at least one day prior to the date that a first Patent Office action appears in the Patent Application Information Retrieval system.

7. The accompanying petition contains a request for early publication in compliance with 37 CFR § 1.219 and payment of the publication fee set forth in 37 CFR § 1.18(d).

Should the examiner wish to discuss the foregoing, or any matter of form or procedure in an effort to advance this application to allowance, the examiner is urged to contact the undersigned attorney.

Respectfully submitted,

**MARSHALL, GERSTEIN & BORUN LLP**

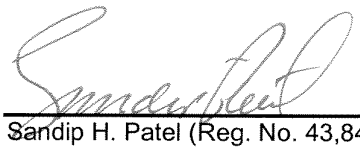

**January 25, 2011**

Sandip H. Patel (Reg. No. 43,848)
Attorneys for Applicants
6300 Willis Tower
233 South Wacker Drive
Chicago, Illinois 60606-6357
Telephone: (312) 474-6300

**Customer No. 04743**

UNITED STATES PATENT AND TRADEMARK OFFICE

UNITED STATES DEPARTMENT OF COMMERCE
United States Patent and Trademark Office
Address: COMMISSIONER FOR PATENTS
P.O. Box 1450
Alexandria, Virginia 22313-1450
www.uspto.gov

| APPLICATION NO. | FILING DATE | FIRST NAMED INVENTOR | ATTORNEY DOCKET NO. | CONFIRMATION NO. |
|---|---|---|---|---|
| 13/013,302 | 01/25/2011 | Emily Charlotte Boswell | 30766/45543 | 8493 |

4743 7590 03/15/2011

MARSHALL, GERSTEIN & BORUN LLP
233 SOUTH WACKER DRIVE
6300 WILLIS TOWER
CHICAGO, IL 60606-6357

| EXAMINER | |
|---|---|
| ART UNIT | PAPER NUMBER |
| 3728 | |

| NOTIFICATION DATE | DELIVERY MODE |
|---|---|
| 03/15/2011 | ELECTRONIC |

**Please find below and/or attached an Office communication concerning this application or proceeding.**

The time period for reply, if any, is set in the attached communication.

Notice of the Office communication was sent electronically on above-indicated "Notification Date" to the following e-mail address(es):

mgbdocket@marshallip.com

UNITED STATES PATENT AND TRADEMARK OFFICE

Commissioner for Patents
United States Patent and Trademark Office
P.O. Box 1450
Alexandria, VA 22313-1450
www.uspto.gov

MARSHALL, GERSTEIN & BORUN LLP
233 SOUTH WACKER DRIVE
6300 WILLIS TOWER
CHICAGO IL 60606-6357

3/15/2011

In re Application of :
Boswell et al. : DECISION ON PETITION
Application No. 13/013,302 : TO MAKE SPECIAL UNDER
Filed: 1/25/2011 : THE GREEN TECHNOLOGY
Attorney Docket No. **30766/45543** : PILOT PROGRAM

This is a decision on the petition under 37 CFR 1.102, filed 1/25/2011, to make the above-identified application special under the pilot program for applications pertaining to Green Technologies as set forth in 74 Federal Register Notice 64666 (December 8, 2009) and amended by 75 Federal Register Notice 28554 (May 21, 2010) and 75 Federal Register Notice 69049 (November 10, 2010).

The petition is **GRANTED**.

A grantable petition to make an application special under 37 CFR 1.102 and the pilot program as set forth in 74 FR 64666 must be directed to a nonprovisional application filed under 35 USC 111(a) or be a national stage entry under 35 USC 371, exclusive of any reissue applications.

In order to qualify for special status, the following requirements must be met. 1) The application must have no more than 3 independent claims and no more than 20 total claims. 2) The application must not contain any multiple dependent claims. 3) The petition must state the basis for seeking special status, i.e., the claimed invention either: A) materially enhances the quality of the environment or B) materially contributes to: i) the discovery or development of renewable energy resources, ii) the more efficient utilization and conservation of energy resources, or iii) greenhouse gas emission reduction. 4) If the disclosure is not clear on its face that the claimed invention materially contributes under category (A) or (B), the petition must be accompanied by a statement by the applicant, assignee, or an attorney/agent registered to practice before the Office explaining how the materiality standard is met. 5) A statement that applicant will agree to make an election without traverse in a telephonic interview if a restriction requirement is made by the examiner. 6) The petition to make special must be filed electronically. 7) The petition must be filed at least one day prior to the date that a first Office Action appears in the Patent Application Information Retrieval (PAIR) system. 8) The petition must be accompanied by a

request for early publication in compliance with 37 CFR 1.219 and include the publication fee as set forth in 37 CFR 1.18(d).

The requirement for a fee for consideration of the petition to make special for applications pertaining to Green Technologies has been waived.

The instant petition complies with items 1 – 8 above. Accordingly, the above-identified application has been accorded "special" status.

Telephone inquires concerning this decision should be directed to Tom Dunn at 571-272-1171.

The application is being forwarded to the Technology Center Art Unit 3728 for action on the merits commensurate with this decision.

/Tom Dunn/

Tom Dunn
Quality Assurance Specialist
Technology Center 1700

UNITED STATES PATENT AND TRADEMARK OFFICE

Commissioner for Patents
United States Patent and Trademark Office
P.O. Box 1450
Alexandria, VA 22313-1450
www.uspto.gov

JAMES GERARD SHELNUT
156 MARY CATHERINE DRIVE
LANCASTER MA 01523-2959

MAILED
APR 04 2012
OFFICE OF PETITIONS

| | | |
|---|---|---|
| In re Application of | : | |
| Karen Greenwald | : | |
| Application No. 13/013310 | : | DECISION |
| Filing or 371(c) Date: 01/25/2011 | : | ON PETITION |
| Attorney Docket Number: | : | |
| 701510 | : | |

This is a decision on the Petition to Revive an Unintentionally Abandoned Application Under 37 CFR 1.137(b), filed February 21, 2012.

This Petition is hereby **granted**.

The above-identified application became abandoned for failure to timely and properly reply to the Notice to File Missing Parts of Nonprovisional Application ("Notice"), mailed February 22, 2011.The Notice set a two (2) month period for reply. Extensions of time were available under 37 CFR 1.136(a). Applicant filed a reply to the Notice on March 4, 2011; however, the reply was incomplete. Applicant was so notified in a Notice of Incomplete Reply (Nonprovisional), mailed March 14, 2011. Applicant filed a second reply to the Notice on May 10, 2011; however, the reply required an extension of time request and fee to have been considered timely. No complete and proper reply to the Notice to File Missing Parts of Nonprovisional Application having been received, the application became abandoned May 11, 2011.

Applicant files the present petition and petition fee, and the reply to the Notice to File Missing Parts of Nonprovisional Application was filed on March 4, 2011 and May 10, 2011. The petition satisfies the conditions for revival pursuant to the provisions of 37 CFR 1.137(b) in that the petition includes (1) the reply (previously filed); (2) the petition fee; and (3) the required statement of unintentional delay. Accordingly, the reply is accepted as having been unintentionally delayed.

This application is being referred to the Office of Patent Application Processing ("OPAP") for continued processing of the reply, and for continued processing in the normal course of business.

Telephone inquiries concerning this decision should be directed to the undersigned at (571) 272-3232.

/DLW/

Derek L. Woods
Attorney
Office of Petitions

UNITED STATES PATENT AND TRADEMARK OFFICE

Commissioner for Patents
United States Patent and Trademark Office
P.O. Box 1450
Alexandria, VA 22313-1450
www.uspto.gov

MAILED

DEC 05 2011

OFFICE OF PETITIONS

MUSKIN & CUSICK, LLC
100 WEST MAIN STREET
SUITE 205
LANSDALE, PA 19446

In re Application of :
Geoff Hall :
Application No. 13/013,334 : DECISION ON PETITION
Filed: January 25, 2011 :
Attorney Docket No. 1009 :

This is a decision on the petition under the unintentional provisions of 37 CFR 1.137(b), filed November 8, 2011, to revive the above-identified application.

The application became abandoned for failure to reply in a timely manner to the Notice to File Missing Parts of Non-provisional Application (Notice), mailed February 10, 2011. The Notice set a period for reply of two (2) months from the mail date of the Notice. No extensions of time under the provisions of 37 CFR 1.136(a) were obtained. Accordingly, the application became abandoned on April 11, 2011.

The petition satisfies the requirements of 37 CFR 1.137(b) in that petitioner has supplied (1) the reply in the form of a reply, (2) the petition fee of $930, and (3) a proper statement of unintentional delay.

In view of the above, the petition is **GRANTED**.

Telephone inquiries concerning this decision should be directed to undersigned at (571) 272-1642. All other inquiries concerning the examination or status of this application should be directed to the Office of Patent Application Processing at their hotline 571-272-4000.

This application is being referred back to the Office of Patent Application Processing for pre-examination processing of the reply received May 10, 2011.

April M. Wise
Petitions Examiner
Office of Petitions

UNITED STATES PATENT AND TRADEMARK OFFICE

UNITED STATES DEPARTMENT OF COMMERCE
United States Patent and Trademark Office
Address: COMMISSIONER FOR PATENTS
P.O. Box 1450
Alexandria, Virginia 22313-1450
www.uspto.gov

| APPLICATION NO. | FILING DATE | FIRST NAMED INVENTOR | ATTORNEY DOCKET NO. | CONFIRMATION NO. |
|---|---|---|---|---|
| 13/013,440 | 01/25/2011 | Chia Hua YU | DEEHDC-PT598 | 8754 |

3624 7590 04/11/2011

VOLPE AND KOENIG, P.C.
UNITED PLAZA
30 SOUTH 17TH STREET
PHILADELPHIA, PA 19103

| EXAMINER | |
|---|---|
| DUONG, THOI V | |
| **ART UNIT** | **PAPER NUMBER** |
| 2871 | |

| NOTIFICATION DATE | DELIVERY MODE |
|---|---|
| 04/11/2011 | ELECTRONIC |

**Please find below and/or attached an Office communication concerning this application or proceeding.**

The time period for reply, if any, is set in the attached communication.

Notice of the Office communication was sent electronically on above-indicated "Notification Date" to the following e-mail address(es):

eoffice@volpe-koenig.com

UNITED STATES PATENT AND TRADEMARK OFFICE

Commissioner for Patents
United States Patent and Trademark Office
P.O. Box 1450
Alexandria, VA 22313-1450
www.uspto.gov

VOLPE AND KOENIG, P.C.
UNITED PLAZA
30 SOUTH 17TH STREET
PHILADELPHIA, PA 19103

APR 11 2011

In re Application of:
Chia Hua YU, *et al.*
Serial No.: 13/013,440
Filed: January 25, 2011
Title: FRINGE FIELD SWITCHING LIQUID CRYSTAL DISPLAY APPARATUS

: DECISION ON PETITION TO MAKE SPECIAL FOR NEW APPLICATION UNDER 37 C.F.R. § 1.102 & M.P.E.P. § 708.02

This is a decision on the petition to make the above-identified application special for accelerated examination procedure under 37 C.F.R. § 1.102(d) filed January 25, 2011.

The petition to make the application special is GRANTED.

The application is eligible for accelerated examination and the petition complies with the conditions for granting the application special status pursuant to the "Change to Practice for Petitions in Patent Applications to Make Special and for Accelerated Examination" published June 26, 2006, in the Federal Register. (71 Fed. Reg. 36323).

The prosecution of the instant application will be conducted expeditiously according to the following guidelines.

1. The application will be docketed to an examiner and taken up for action within two weeks of the date of this decision.

2. Restriction Practice:
   If the examiner determines that the claims are not directed to a single invention, a telephone request to elect one single invention will be made pursuant to MPEP 812.01. As a prerequisite to the grant of this petition, the applicant has agreed to make an oral election, by telephone, without traverse. If the applicant refuses to make an election without traverse, or the examiner cannot reach the applicant after a reasonable effort, the examiner will treat the first claimed invention (invention defined by claim 1) as having being constructively elected without traverse for examination.

3. Office action:
If it is determined that, after appropriate consultation, there is a potential rejection or any other issue to be addressed, the examiner will telephone the applicant and arrange an interview to discuss and resolve the issue. An Office action, other than a Notice of Allowance and Fee(s) Due (Notice of Allowance), will not be issued unless either: 1) an interview was conducted but did not result in agreed to action that places the application in condition for allowance, or, 2) a determination is made that an interview would be unlikely to result in the application being placed in condition for allowance, and 3) an internal conference has been held to review any rejection of any claim.

4. Time for Reply:
An Office action other than a Notice of Allowance or a final Office action will set a shortened statutory period of one month or thirty days, whichever is longer, for reply with no extension of time available under 37 CFR 1.136(a). Failure to timely file a reply within this non-extendible period for reply will result in the abandonment of the application.

5. Reply by Applicant:
A timely reply to an Office action other than the Notice of Allowance must be submitted electronically via EFS or EFS-web and limited to addressing the rejections, objections and requirement made. Any amendment that attempts to: 1) add claims which would result in more than three pending independent claims or more than twenty pending total claims; 2) present claims not encompassed by the pre-examination search or an updated accelerated examination support document; or 3) present claims that are directed a non-elected invention or an invention other than that previously claimed and examined in the application, will be treated as not fully responsive and will not be entered.

   For any amendment to the claims (including any new claim) that is not encompassed by the accelerated examination support document, applicant must provide an updated accelerated examination support document that encompasses the amended or new claims at the time of filing of the amendment.

   To proceed expeditiously with the examination, it is recommended that a reply with amendments made to any claim or with any new claim being added be accompanied by an updated accelerated examination support document or a statement explaining how the amended or new claim is supported by the original accelerated examination support document.

6. Information Disclosure Statement (IDS):
Any IDS filed during prosecution must be submitted electronically via EFS or EFS-web, accompanied by an updated accelerated examination support document, and be in compliance with 37 CFR 1.97 and 1.98.

7. Post-Allowance Processing:
   To expedite processing of the allowed application into a patent, the applicant must: 1) pay the required fees within one month of the date of the Notice of Allowance, and 2) not file any post allowance papers not required by the Office. In no event may the issue fee be paid and accepted later than three months from the date of the Notice of Allowance.

8. After-Final and Appeal Procedures:
   To expedite prosecution, after receiving the final Office action, applicant must: 1) promptly file a notice of appeal, an appeal brief and appeal fees; and 2) not request a pre-appeal brief conference.

   Any amendment, affidavit or other evidence filed after final Office action must comply with applicable rules and the requirements outlined in numbered paragraphs 5 and 6 above.

   On appeal, the application will proceed according to normal appeal procedures. After appeal, the application will again be treated special.

9. Proceedings Outside the Normal Examination Process:
   If the application becomes involved in a proceeding that is outside the normal examination process (e.g., a secrecy order, national security review, interference proceeding, petitions under 37 CFR 1.181, 182 or 183), the application will be treated special before and after such proceeding.

10. Final Disposition:
    The twelve month goal of this accelerated examination procedure ends with a final disposition. The mailing of a final Office action, a Notice of Allowance, the filing of a Notice of Appeal, or the filing of a Request for Continued Examination (RCE) is the final disposition.

If, during prosecution, a paper is not filed electronically using EFS-web, a reply is filed but is not fully responsive, the application is involved in an appeal, or a proceeding outside normal examination process, the application will still be examined expeditiously, however, the final disposition may occur more than twelve months from the filing of the application.

Any inquiry regarding this decision should be directed to Quality Assurance Specialist (QAS) Michael Day at (571) 272-1568.

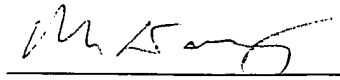

Michael Day, QAS
Technology Center 2800
Semiconductors, Electrical and Optical
Systems and Components

**Doc Code: PET.GREEN**
**Document Description: Petition for Green Tech Pilot**

PTO/SB/420 (11-10)
Approved for use through 01/31/2011. OMB 0651-0062
U.S. Patent and Trademark Office; U. S. DEPARTMENT OF COMMERCE
Under the Paperwork Reduction Act of 1995, no persons are required to respond to a collection of information unless it displays a valid OMB control number.

# PETITION TO MAKE SPECIAL UNDER THE GREEN TECHNOLOGY PILOT PROGRAM

| Attorney Docket Number: | Application Number (if known): | Filing date: |
|---|---|---|
| T.09-190 | | January 25, 2011 |

First Named Inventor: Esko Olavi Polvi

Title: Carbon Dioxide Capture Interface and Power Generation Facility

**APPLICANT HEREBY REQUESTS TO PARTICIPATE IN THE GREEN TECHNOLOGY PILOT PROGRAM FOR THE ABOVE-IDENTIFIED APPLICATION.** **See Instruction Sheet on page 2.**

This petition must be timely filed electronically using the USPTO electronic filing system, EFS-Web.

1. By filing this petition:

   **Applicant is requesting early publication: Applicant hereby requests early publication under 37 CFR 1.219 and the publication fee set forth in 37 CFR 1.18(d) accompanies this request.**

2. By filing this petition: applicant is agreeing to make an election without traverse in a telephonic interview and elect an invention that meets the eligibility requirements for the Green Technology Pilot Program, if the Office determines that the claims are not obviously directed to a single invention. See Instruction Sheet.

3. This request is accompanied by statements of special status for the eligibility requirement.

4. The application contains no more than three (3) independent claims and twenty (20) total claims.

5. The application does not contain any multiple dependent claims.

6. Other attachments: _____

| Signature | Date |
|---|---|
| | January 25, 2011 |
| Name (Print/Typed) Christine W. Trebilcock | Registration Number 41,373 |

***Note:*** *Signatures of all the inventors or assignees of record of the entire interest or their representative(s) are required in accordance with 37 CFR 1.33 and 11.18. Please see 37 CFR 1.4(d) for the form of the signature. If necessary, submit multiple forms for more than one signature see below*.*

☒ *Total of 1 forms are submitted.

The information is required to obtain or retain a benefit by the public which is to file (and by the USPTO to process) an application. Confidentiality is governed by 35 U.S.C. 122 and 37 CFR 1.11 and 1.14. This collection is estimated to take 12 hours to complete, including gathering, preparing, and submitting the completed application form to the USPTO. Time will vary depending upon the individual case. Any comments on the amount of time you require to complete this form and/or suggestions for reducing this burden, should be sent to the Chief Information Officer, U.S. Patent and Trademark Office, U.S. Department of Commerce, P.O. Box 1450, Alexandria, VA 22313-1450. DO NOT SEND FEES OR COMPLETED FORMS TO THIS ADDRESS. **SEND TO: Commissioner for Patents, P.O. Box 1450, Alexandria, VA 22313-1450.**

*If you need assistance in completing the form, call 1-800-PTO-9199 and select option 2.*

**IN THE UNITED STATES PATENT AND TRADEMARK OFFICE**

| | | |
|---|---|---|
| **In re Application of:** | ) | |
| | ) | |
| **Esko Olavi Polvi** | ) | |
| | ) | |
| **Serial No.: Not yet assigned** | ) | |
| | ) | **CARBON DIOXIDE INTEFACE** |
| **Filed: January 25, 2011** | ) | **AND POWER GENERATION** |
| | ) | **FACILITY** |
| **Art Unit: Not yet assigned** | ) | |
| | ) | |
| **Patent Examiner: Not yet assigned** | ) | |
| | ) | |
| **Customer No. 30058** | ) | |
| | ) | |
| **Our Ref: 09-190** | ) | |

January 25, 2011

**STATEMENT REGARDING PETITION TO MAKE SPECIAL UNDER GREEN TECHNOLOGY PROGRAM**

Applicant hereby states the application submitted herewith is eligible for the Green Technology Program for at least the following reasons:

- The application is directed to an interface for capturing carbon dioxide emissions from a pressurized fluidized bed combustion (PFBC) facility.
- The interface enables up to 95% reduction of greenhouse gas emissions from coal combustion from a PFBC boiler.
- Burning a mix of coal and renewable biomass can result in a power plant with a negative carbon foot print when implemented with the interface-enabled combination of a PFBC boiler with the Benfield carbon dioxide capture process disclosed in this application.

- The invention provides a power generation facility having low emissions with a carbon dioxide capture ratio above 90%, and is expected to meet all the US EPA emission limits for generation facilities to low emissions of sulfur oxides, nitrogen oxides, volatile organic compounds, carbon monoxide and particulate matter.

- In embodiments, the interface uses a sulfur dioxide absorber that is designed to reduce or remove the sulfur dioxide from the flue gas in an amount effective to minimize the consumption of capturing agent used in the carbon dioxide capturing process unit.

. Please contact the undersigned attorney of record should the U.S. Patent and Trademark Office have any questions or require additional information pertaining to Applicant's request for admission to the Green Technology Program.

The U.S. Patent and Trademark Office is authorized to charge Deposit Account Number 03-2026 for any fees incurred with respect to this Statement.

Respectfully submitted,

By 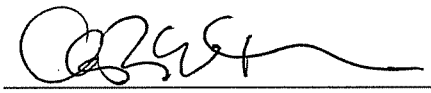

Christine W. Trebilcock, Esq.
PTO Registration No. 41,373
Cohen & Grigsby, P.C.
625 Liberty Avenue, 5th Floor
Pittsburgh, PA 15222-3152
(412) 297-4900

UNITED STATES PATENT AND TRADEMARK OFFICE

UNITED STATES DEPARTMENT OF COMMERCE
United States Patent and Trademark Office
Address: COMMISSIONER FOR PATENTS
P.O. Box 1450
Alexandria, Virginia 22313-1450
www.uspto.gov

| APPLICATION NO. | FILING DATE | FIRST NAMED INVENTOR | ATTORNEY DOCKET NO. | CONFIRMATION NO. |
|---|---|---|---|---|
| 13/013,483 | 01/25/2011 | Esko Olavi Polvi | 09-190 | 8821 |

30058 7590 02/18/2011

COHEN & GRIGSBY, P.C.
625 LIBERTY AVENUE
PITTSBURGH, PA 15222-3152

| EXAMINER | |
|---|---|
| ART UNIT | PAPER NUMBER |
| 3741 | |

| NOTIFICATION DATE | DELIVERY MODE |
|---|---|
| 02/18/2011 | ELECTRONIC |

**Please find below and/or attached an Office communication concerning this application or proceeding.**

The time period for reply, if any, is set in the attached communication.

Notice of the Office communication was sent electronically on above-indicated "Notification Date" to the following e-mail address(es):

IPPatent@CohenLaw.com
LPainePfister@CohenLaw.com

UNITED STATES PATENT AND TRADEMARK OFFICE

Commissioner for Patents
United States Patent and Trademark Office
P.O. Box 1450
Alexandria, VA 22313-1450
www.uspto.gov

COHEN & GRIGSBY, P.C.
625 LIBERTY AVENUE
PITTSBURGH PA 15222-3152

| | | |
|---|---|---|
| In re Application of | : | |
| POLVI, ESKO OLAVI | : | DECISION ON PETITION |
| Application No. 13/013,483 | : | TO MAKE SPECIAL UNDER |
| Filed: Jan. 25, 2011 | : | THE GREEN TECHNOLOGY |
| Attorney Docket No. 09/190 | : | PILOT PROGRAM |

This is a decision on the petition under 37 CFR 1.102, filed Jan. 25, 2011, to make the above-identified application special under the pilot program for applications pertaining to Green Technologies as set forth in 74 Federal Register Notice 64666 (December 8, 2009) and amended by 75 Federal Register Notice 28554 (May 21, 2010) and 75 Federal Register Notice 69049 (November 10, 2010).

The petition is **dismissed**.

If reconsideration of this decision is desired, a petition for reconsideration must be filed within ONE (1) MONTH OR THIRTY (30) DAYS from the mail date of this decision, whichever is longer. No extension of this time limit can be granted under 37 CFR 1.136(a) or (b). The petition for reconsideration should include an exhaustive attempt to provide the lacking item(s) noted below, since, after a decision on the petition for reconsideration, no further reconsideration or review of the matter will be undertaken by the Director.

A grantable petition to make an application special under 37 CFR 1.102 and the pilot program as set forth in 74 FR 64666 must be directed to a nonprovisional application filed under 35 USC 111(a) or be a national stage entry under 35 USC 371, exclusive of any reissue applications.

In order to qualify for special status, the following requirements must be met. 1) The application must have no more than 3 independent claims and no more than 20 total claims. 2) The application must not contain any multiple dependent claims. 3) The petition must state the basis for seeking special status, i.e., the claimed invention either: A) materially enhances the quality of the environment or B) materially contributes to: i) the discovery or development of renewable energy resources, ii) the more efficient utilization and conservation of energy resources, or iii) greenhouse gas emission reduction. 4) If the disclosure is not clear on its face that the claimed invention materially contributes under category (A) or (B), the petition must be accompanied by a statement by the applicant, assignee, or an attorney/agent registered to practice before the Office explaining how the materiality standard is met. 5) A statement that applicant will agree to make an election without traverse in a telephonic interview if a restriction requirement is made

by the examiner. 6) The petition to make special must be filed electronically. 7) The petition must be filed at least one day prior to the date that a first Office Action appears in the Patent Application Information Retrieval (PAIR) system. 8) The petition must be accompanied by a request for early publication in compliance with 37 CFR 1.219 and include the publication fee as set forth in 37 CFR 1.18(d).

The requirement for a fee for consideration of the petition to make special for applications pertaining to Green Technologies has been waived.

The petition lacks item # 4.

In regard to item 4, petitioner should note that the instant petition includes a statement identifying the basis for the special status (i.e., whether the instant invention (1) materially enhances the quality of the environment or materially contributes to (2) development of renewable energy resources or energy conservation, or (3) greenhouse gas reduction) as required by sections II and III of the notice. However, as stated in the notice, applicant must also provide a statement pertaining to the materiality standard if the application disclosure is not clear on its face as to the materiality of the basis for the special status of the invention. This petition lacks such a statement and it is not agreed that the application on its face meets that materiality standard. Petitioner states that the claimed invention relates to sulfur dioxide absorber or removal of $SO_2$ from flue gas. This is not convincing. For example, it is not clear how the claimed waste heat recovery for heating and converting feed water to steam for steam turbine generator will provide and enhance the quality of the environment or contribute to development of renewable energy resources or energy conservation or greenhouse gas reduction. Claim 1 reads on a conventional waste heat recovery to heat incoming feedwater for a steam turbine in a PFBS facility.

Any reconsideration of this decision should be submitted through the USPTO electronic filing system, EFS-Web, and selecting the document description of "Petition for Green Tech Pilot" on the EFS-Web screen.

Telephone inquiries concerning this decision should be directed to Henry C. Yuen at 571-272-4856.

This application is currently undergoing pre-examination processing. Upon completion, the application will be forwarded to the Technology Center Art Unit 3741 for action in its regular turn.

/Henry C. Yuen/

Henry C. Yuen
Quality Assurance Specialist
Technology Center 3700

**IN THE UNITED STATES PATENT AND TRADEMARK OFFICE**

| | | |
|---|---|---|
| **In re Application of:** | ) | |
| | ) | |
| **Esko Olavi Polvi** | ) | |
| | ) | |
| **Serial No.: Not yet assigned** | ) | |
| | ) | **CARBON DIOXIDE INTERFACE AND POWER GENERATION FACILITY** |
| **Filed: January 25, 2011** | ) | |
| | ) | |
| **Art Unit: Not yet assigned** | ) | |
| | ) | |
| **Patent Examiner: Not yet assigned** | ) | |
| | ) | |
| **Customer No. 30058** | ) | |
| | ) | |
| **Our Ref: 09-190** | ) | |

March 15, 2011

**REQUEST FOR RECONSIDERATION OF PETITION TO MAKE SPECIAL UNDER GREEN TECHNOLOGY PROGRAM**

This communication is in response to the U.S. Patent and Trademark Office ("Office") Decision on Petition to Make Special Under the Green Technology Pilot Program dated February 18, 2011 (the "Decision"), and claims that the invention disclosed in the above patent application (the "Application") will materially contribute to the more efficient utilization and conservation of energy resources, and greenhouse gas emission reduction.

In the Decision, the Office has acknowledged that Applicant's Petition to Make Special pursuant to 37 C.F.R. § 1.102, dated January 25, 2011 (the "Petition") includes the requisite statement identifying the basis for eligibility; however, the Office has requested Applicant provide a statement pertaining to the materiality standard. The Office has concluded "this petition lacks such a statement and it is not agreed that the application on its face meets that materiality standard… [because] For example, it is not clear how the claimed waste heat

recovery for heating and converting feed water to steam for steam turbine generator will provide and enhance the quality of the environment or contribute to development of renewable energy resources or energy conservation or greenhouse gas reduction." Decision, p. 2.

The materiality standard is met if the "claimed invention materially contributes to (a) development of renewable energy or energy conservation, or (b) greenhouse gas emission reduction." *See* 75 Fed. Reg. 28554, 28555 ("The Elimination of Classification Requirement in the Green Technology Pilot Program" Notice, published on May 21, 2010). Applicant respectfully submits the Applicant's invention offers both energy conservation and greenhouse gas emission reduction and, therefore, meets the materiality standard.

**Invention Materially Contributes To Energy Conservation**

The claimed invention materially contributes to energy conservation by providing methods for conditioning flue gas from a fossil fuel burning facility such as a pressurized fluidized bed combustion ("PFBC") facility.

Section 708.02, Item VI of the M.P.E.P. identifies examples of inventions in this energy conservation category. Examples of energy conserving inventions include "inventions relating to the reduction of energy consumption in combustion systems, industrial equipment, household appliances, etc." *See* M.P.E.P § 708.02, Item VI. Applicant's invention is directed to reduction of greenhouse gases and of energy consumption in combustion systems with $CO_2$ capture.

In embodiments of Applicant's invention, flue gas from a PFBC facility is treated and recycled to supplement the power needed to run the PFBC combustion facility. This in turn reduces the amount of energy needed to power the PFBC facility, and, thus materially contributes to energy conservation.

Burning a mix of coal and renewable biomass can result in a power plant with a negative carbon foot print when implemented with Applicant's interface-enabled combination of a PFBC boiler with carbon dioxide capture process disclosed in this Application. As illustrated by the below figure a PFBC plant with 95% carbon dioxide capture using a mix of coal and biomass fuel can operate at a negative carbon foot print. Assuming that legislation is enacted that requires carbon dioxide capture from coal-fired plants to be equal to a Natural Gas Combined Cycle ("NGCC") plant then it would require a 60% capture rate on the coal fired output. The following illustration shows that the PFBC plant with 95% carbon dioxide capture burning 40% carbon neutral biomass fuel would potentially be able to sell 59% of its output as carbon credits.

**Illustration of Practical Carbon Negative Limit:**

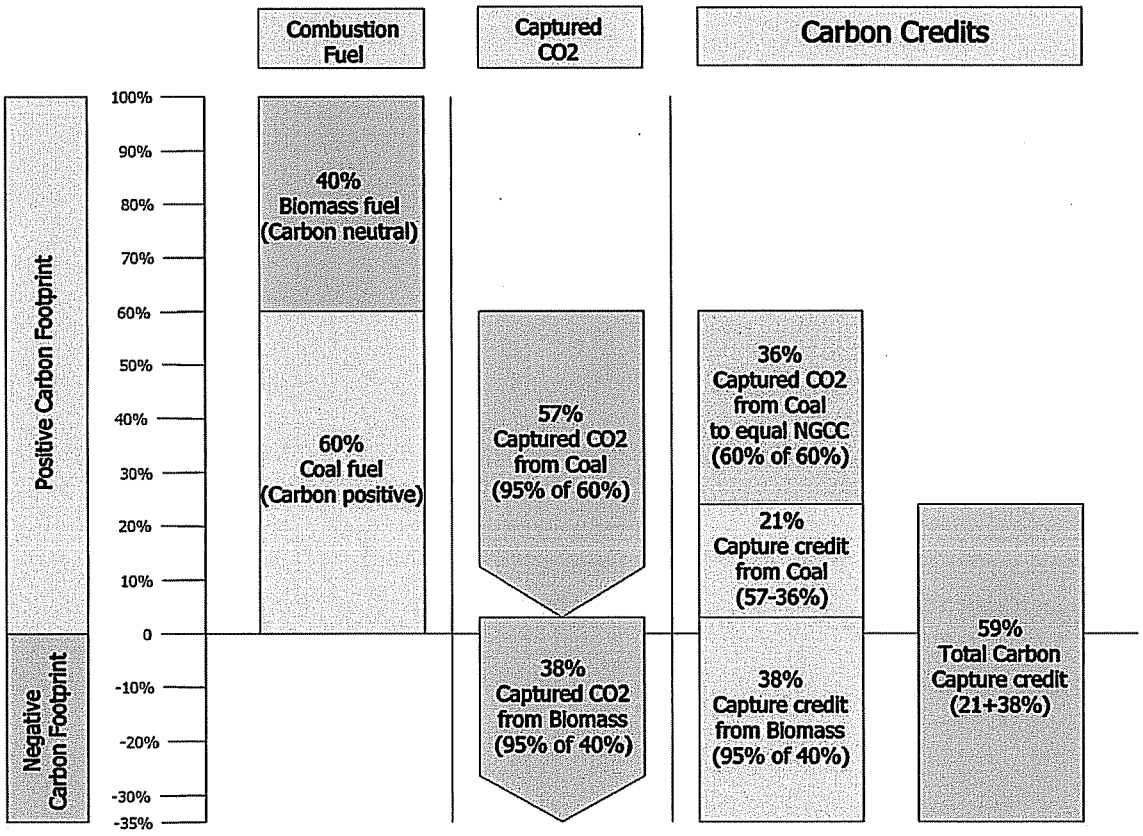

The above combination with sequestering the carbon dioxide after the use for EOR results in a coal fired power plant that actually cleans the atmosphere from carbon dioxide with the additional potential revenue sources of EOR and carbon credits; and, thus materially contributes to energy conservation and reduction of greenhouse gasses.

Furthermore, in embodiments, the invention provides a fossil fuel burning facility that uses a sulfur dioxide absorber. The absorber is specifically designed to reduce or remove the sulfur dioxide from the flue gas in an amount effective to minimize the consumption of capturing agent used in the carbon dioxide capturing process unit. The minimization of the consumption of the capturing agent contributes to the efficiency of the process contributing to the reduction of the greenhouse gasses and minimizes the cost of the $CO_2$ capture operation that must be covered by the energy rate payers; and, therefore, materially contributes to energy conservation.

For at least these reasons, the interface and methods disclosed in the application materially contribute to energy conservation through the reduction of energy consumption in combustion systems with $CO_2$ capture. Therefore, Applicant's invention for recycling energy falls within the scope of the examples as it will reduce of energy consumption in combustion systems with $CO_2$ capture.

**Invention Materially Contributes To Greenhouse Gas Emission Reduction**

The claimed invention materially contributes to greenhouse gas emission reduction by providing an interface for efficiently capturing and treating carbon dioxide emissions from flue gas of a fossil fuel burning facility such as a PFBC facility.

Many new or retrofitted power generation facilities in development will be unable to attain the quality emission standards established by the upcoming carbon dioxide regulations Absent the feature as by the way of Applicant's interface, such facilities could not be permitted

and built. Applicant's interface is uniquely designed to adapt or retrofit existing facilities with PFBC boilers with pressurized carbon capture technology. Once fit, the interface will lower facilities emissions of sulfur oxides, nitrogen oxides, volatile organic compounds, carbon monoxide and particulate matter. It is expected to meet all the US EPA emission limits for generation facilities to low emissions of sulfur oxides, nitrogen oxides, volatile organic compounds, carbon monoxide and particulate matter. Thus, not only will the interface assist facilities attain quality emission standards, but will also enable up to a 95% reduction of greenhouse gas emissions from coal combustion from a pressurized fluidized bed combustion boiler.

In the Decision, the Office stated that "it is not clear how the claimed waste heat recovery for heating and converting feed water to steam for steam turbine generator will provide and enhance the quality of the environment." *See* Decision, p. 2. Applicant submits the feedwater heating is only one small detail of the invention. Not only will the feedwater heating reduce the amount of energy needed to run the facility, by recycling the energy needed, it will also enable the total PFBC / Benfield process to optimize the overall cycle efficiency, and thereby reduce the emission of greenhouse gasses. The proposed interface enables the PFBC process to be connected to the commercially available Benfield carbon dioxide capture process and thereby reduce up to 95% of the carbon dioxide. Without the proposed interface the two processes can not function together.

This claimed invention enables efficient capture of up to 95% of the greenhouse gasses from the PFBC power plant generating electricity that otherwise would be emitted to the atmosphere; and, therefore, the invention materially contributes to greenhouse gas emission reduction for consideration in the Green Technology Pilot Program.

**Statement for Multiple Inventions**

As required by 74 Fed. Reg. 64666, Applicant makes the following statement: if the Office determines that the claims are directed to multiple inventions (e.g., in a restriction requirement), Applicant will agree to make an election without traverse in a telephonic interview, and elect an invention that meets the eligibility requirements in section II or III of this notice and is classified in one of the U.S. classifications listed in section VI of this notice. *See* 74 Fed. Reg. 64666 ("The Pilot Program for Green Technologies Including Greenhouse Gas Reduction" Notice, published on December 8, 2009).

**Conclusion**

Applicant respectfully requests the Application be admitted to the Green Technology Program pursuant to 37 C.F.R. § 1.102 because, among other things, the Application is directed to technology that will materially contribute to the more efficient utilization and conservation of energy resources, and greenhouse gas emission reduction.

Please contact the undersigned attorney of record should the U.S. Patent and Trademark Office have any questions or require additional information pertaining to Applicant's request for admission to the Green Technology Program.

The U.S. Patent and Trademark Office is authorized to charge Deposit Account Number 03-2026 for any fees incurred or credit any overpayments made with respect to this Request for Reconsideration.

Respectfully submitted,

By 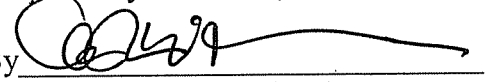

Christine W. Trebilcock, Esq.
PTO Registration No. 41,373
Cohen & Grigsby, P.C.
625 Liberty Avenue, 5th Floor
Pittsburgh, PA 15222-3152
(412) 297-4900

1641550_1.DOC

UNITED STATES PATENT AND TRADEMARK OFFICE

UNITED STATES DEPARTMENT OF COMMERCE
United States Patent and Trademark Office
Address: COMMISSIONER FOR PATENTS
P.O. Box 1450
Alexandria, Virginia 22313-1450
www.uspto.gov

| APPLICATION NO. | FILING DATE | FIRST NAMED INVENTOR | ATTORNEY DOCKET NO. | CONFIRMATION NO. |
|---|---|---|---|---|
| 13/013,483 | 01/25/2011 | Esko Olavi Polvi | 09-190 | 8821 |

30058 7590 03/29/2011

COHEN & GRIGSBY, P.C.
625 LIBERTY AVENUE
PITTSBURGH, PA 15222-3152

| EXAMINER | |
|---|---|
| ART UNIT | PAPER NUMBER |
| 3748 | |

| NOTIFICATION DATE | DELIVERY MODE |
|---|---|
| 03/29/2011 | ELECTRONIC |

**Please find below and/or attached an Office communication concerning this application or proceeding.**

The time period for reply, if any, is set in the attached communication.

Notice of the Office communication was sent electronically on above-indicated "Notification Date" to the following e-mail address(es):

IPPatent@CohenLaw.com
LPainePfister@CohenLaw.com

UNITED STATES PATENT AND TRADEMARK OFFICE

Commissioner for Patents
United States Patent and Trademark Office
P.O. Box 1450
Alexandria, VA 22313-1450
www.uspto.gov

COHEN & GRIGSBY, P.C.
625 LIBERTY AVENUE
PITTSBURGH PA 15222-3152

| | | |
|---|---|---|
| In re Application of | : | |
| POLVI, ESKO OLAVI | : | DECISION ON PETITION |
| Application No. 13/013,483 | : | TO MAKE SPECIAL UNDER |
| Filed: Jan. 25, 2011 | : | THE GREEN TECHNOLOGY |
| Attorney Docket No. 09/190 | : | PILOT PROGRAM |

This is a decision on the renewed petition under 37 CFR 1.102, filed March 15, 2011, to make the above-identified application special under the pilot program for applications pertaining to Green Technologies as set forth in 74 Federal Register Notice 64666 (December 8, 2009) and amended by 75 Federal Register Notice 28554 (May 21, 2010) and 75 Federal Register Notice 69049 (November 10, 2010).

The petition is granted.

If reconsideration of this decision is desired, a petition for reconsideration must be filed within ONE (1) MONTH OR THIRTY (30) DAYS from the mail date of this decision, whichever is longer. No extension of this time limit can be granted under 37 CFR 1.136(a) or (b). The petition for reconsideration should include an exhaustive attempt to provide the lacking item(s) noted below, since, after a decision on the petition for reconsideration, no further reconsideration or review of the matter will be undertaken by the Director.

A grantable petition to make an application special under 37 CFR 1.102 and the pilot program as set forth in 74 FR 64666 must be directed to a nonprovisional application filed under 35 USC 111(a) or be a national stage entry under 35 USC 371, exclusive of any reissue applications.

In order to qualify for special status, the following requirements must be met. 1) The application must have no more than 3 independent claims and no more than 20 total claims. 2) The application must not contain any multiple dependent claims. 3) The petition must state the basis for seeking special status, i.e., the claimed invention either: A) materially enhances the quality of the environment or B) materially contributes to: i) the discovery or development of renewable energy resources, ii) the more efficient utilization and conservation of energy resources, or iii) greenhouse gas emission reduction. 4) If the disclosure is not clear on its face that the claimed invention materially contributes under category (A) or (B), the petition must be accompanied by a statement by the applicant, assignee, or an attorney/agent registered to practice before the Office explaining how the materiality standard is met. 5) A statement that applicant will agree to make an election without traverse in a telephonic interview if a restriction requirement is made

by the examiner. 6) The petition to make special must be filed electronically. 7) The petition must be filed at least one day prior to the date that a first Office Action appears in the Patent Application Information Retrieval (PAIR) system. 8) The petition must be accompanied by a request for early publication in compliance with 37 CFR 1.219 and include the publication fee as set forth in 37 CFR 1.18(d).

The requirement for a fee for consideration of the petition to make special for applications pertaining to Green Technologies has been waived.

The instant petition complies with items 1 – 8 above. Accordingly, the above-identified application has been accorded "special" status.

Telephone inquires concerning this decision should be directed to Henry C. Yuen at 571-272-4856.

This application will be forwarded to the Technology Center Art Unit 3748 for action on the merits commensurate with this decision.

/Henry C. Yuen/

Henry C. Yuen
Quality Assurance Specialist
Technology Center TC 3700

UNITED STATES PATENT AND TRADEMARK OFFICE

UNITED STATES DEPARTMENT OF COMMERCE
United States Patent and Trademark Office
Address: COMMISSIONER FOR PATENTS
P.O. Box 1450
Alexandria, Virginia 22313-1450
www.uspto.gov

| APPLICATION NO. | FILING DATE | FIRST NAMED INVENTOR | ATTORNEY DOCKET NO. | CONFIRMATION NO. |
|---|---|---|---|---|
| 13/013,488 | 01/25/2011 | Eric R. Wahl | 08.001 | 8828 |

91020 7590 03/09/2011

Stone Creek LLC
Alan M Flum
2019 NE 179 Street P67
Ridgefield, WA 98642

| EXAMINER | |
|---|---|
| ART UNIT | PAPER NUMBER |
| 2836 | |

| NOTIFICATION DATE | DELIVERY MODE |
|---|---|
| 03/09/2011 | ELECTRONIC |

**Please find below and/or attached an Office communication concerning this application or proceeding.**

The time period for reply, if any, is set in the attached communication.

Notice of the Office communication was sent electronically on above-indicated "Notification Date" to the following e-mail address(es):

alan@stonecreekpatents.com

UNITED STATES PATENT AND TRADEMARK OFFICE

Commissioner for Patents
United States Patent and Trademark Office
P.O. Box 1450
Alexandria, VA 22313-1450
www.uspto.gov

Stone Creek LLC
Alan M Flum
2019 NE 179 Street P67
Ridgefield WA 98642

| | |
|---|---|
| In re Application of:<br>WAHL, Eric R.<br>Serial No.: 13/013,488<br>Filed: January 25, 2011<br>Title: SAFETY DEVICE FOR PLUG AND PLAY SOLAR ENERGY SYSTEM | DECISION ON PETITION TO MAKE SPECIAL FOR NEW APPLICATION UNDER 37 C.F.R. § 1.102 & M.P.E.P. § 708.02 |

This is a decision on the petition to make the above-identified application special for accelerated examination procedure under 37 C.F.R. § 1.102(d) filed January 25, 2011.

The petition to make the application special is GRANTED.

The application is eligible for accelerated examination and the petition complies with the conditions for granting the application special status pursuant to the "Change to Practice for Petitions in Patent Applications to Make Special and for Accelerated Examination" published June 26, 2006, in the Federal Register. (71 Fed. Reg. 36323).

The prosecution of the instant application will be conducted expeditiously according to the following guidelines.

1. The application will be docketed to an examiner and taken up for action within two weeks of the date of this decision.

2. Restriction Practice:
   If the examiner determines that the claims are not directed to a single invention, a telephone request to elect one single invention will be made pursuant to MPEP 812.01. As a prerequisite to the grant of this petition, the applicant has agreed to make an oral election, by telephone, without traverse. If the applicant refuses to make an election without traverse, or the examiner cannot reach the applicant after a reasonable effort, the examiner will treat the first claimed invention (invention defined by claim 1) as having being constructively elected without traverse for examination.

3. Office action:
If it is determined that, after appropriate consultation, there is a potential rejection or any other issue to be addressed, the examiner will telephone the applicant and arrange an interview to discuss and resolve the issue. An Office action, other than a Notice of Allowance and Fee(s) Due (Notice of Allowance), will not be issued unless either: 1) an interview was conducted but did not result in agreed to action that places the application in condition for allowance, or, 2) a determination is made that an interview would be unlikely to result in the application being placed in condition for allowance, and 3) an internal conference has been held to review any rejection of any claim.

4. Time for Reply:
An Office action other than a Notice of Allowance or a final Office action will set a shortened statutory period of one month or thirty days, whichever is longer, for reply with no extension of time available under 37 CFR 1.136(a). Failure to timely file a reply within this non-extendible period for reply will result in the abandonment of the application.

5. Reply by Applicant:
A timely reply to an Office action other than the Notice of Allowance must be submitted electronically via EFS or EFS-web and limited to addressing the rejections, objections and requirement made. Any amendment that attempts to: 1) add claims which would result in more than three pending independent claims or more than twenty pending total claims; 2) present claims not encompassed by the pre-examination search or an updated accelerated examination support document; or 3) present claims that are directed a non-elected invention or an invention other than that previously claimed and examined in the application, will be treated as not fully responsive and will not be entered.

   For any amendment to the claims (including any new claim) that is not encompassed by the accelerated examination support document, applicant must provide an updated accelerated examination support document that encompasses the amended or new claims at the time of filing of the amendment.

   To proceed expeditiously with the examination, it is recommended that a reply with amendments made to any claim or with any new claim being added be accompanied by an updated accelerated examination support document or a statement explaining how the amended or new claim is supported by the original accelerated examination support document.

6. Information Disclosure Statement (IDS):
Any IDS filed during prosecution must be submitted electronically via EFS or EFS-web, accompanied by an updated accelerated examination support document, and be in compliance with 37 CFR 1.97 and 1.98.

7. Post-Allowance Processing:
   To expedite processing of the allowed application into a patent, the applicant must: 1) pay the required fees within one month of the date of the Notice of Allowance, and 2) not file any post allowance papers not required by the Office. In no event may the issue fee be paid and accepted later than three months from the date of the Notice of Allowance.

8. After-Final and Appeal Procedures:
   To expedite prosecution, after receiving the final Office action, applicant must: 1) promptly file a notice of appeal, an appeal brief and appeal fees; and 2) not request a pre-appeal brief conference.

   Any amendment, affidavit or other evidence filed after final Office action must comply with applicable rules and the requirements outlined in numbered paragraphs 5 and 6 above.

   On appeal, the application will proceed according to normal appeal procedures. After appeal, the application will again be treated special.

9. Proceedings Outside the Normal Examination Process:
   If the application becomes involved in a proceeding that is outside the normal examination process (e.g., a secrecy order, national security review, interference proceeding, petitions under 37 CFR 1.181, 182 or 183), the application will be treated special before and after such proceeding.

10. Final Disposition:
    The twelve month goal of this accelerated examination procedure ends with a final disposition. The mailing of a final Office action, a Notice of Allowance, the filing of a Notice of Appeal, or the filing of a Request for Continued Examination (RCE) is the final disposition.

If, during prosecution, a paper is not filed electronically using EFS-web, a reply is filed but is not fully responsive, the application is involved in an appeal, or a proceeding outside normal examination process, the application will still be examined expeditiously, however, the final disposition may occur more than twelve months from the filing of the application.

Any inquiry regarding this decision should be directed to Quality Assurance Specialist Jose' G. Dees at (571) 272-1569.

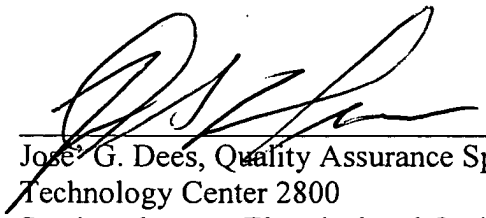

Jose' G. Dees, Quality Assurance Specialist
Technology Center 2800
Semiconductors, Electrical and Optical
Systems and Components

**IN THE UNITED STATES PATENT AND TRADEMARK OFFICE**

Docket No.: 1361-003DIV-C1

In re the Application of: Craig Richard Horne — Group Art Unit: not assigned

Serial No. 13/013,501 — Examiner: not assigned

Filed: January 25, 2011 — Confirmation No. 8852

For: Redox Flow Battery System for Distributed Energy Storage

## STATEMENT REGARDING PUBLICATION OF APPLICATION AND THE ELGIBILITY REQUIREMENT

Mail Stop Petitions
Commissioner for Patents
PO Box 1450
Alexandria, VA 22313-1450

Sir:

This Statement is filed in conjunction with a Petition To Make Special Under The Green Technology Pilot Program.

The undersigned representative of the Applicants' states that the publication fee for the above listed application is being paid in conjunction with the filing of the Petition To Make Special Under The Green Technology Pilot Program.

The undersigned representative of the Applicants further states that the above listed application is entitled to special status under the Green Technology Pilot Program because the invention materially contributes to the development of renewable energy resources and energy conservation. Specifically, the invention provides an economical, efficient and environmentally sound system for storing and delivering electrical power that is ideally suited for use with renewable energy systems, such as solar and wind generation systems. The present invention can store electrical power when it is available

from intermittent renewable power sources, such as wind farms and solar cells, and deliver electrical power to a utility grid or other load in response to demand, thereby rending such renewable power systems more compatible with the electricity grid infrastructure. In addition, being modular and scalable, storage systems of the present invention can be positioned close to loads and/or sources of power, thereby conserving energy by reducing transmission losses. Additionally, this application is a continuation of a divisional of the application that issued as U.S. Patent No. 7,820,321 which was examined under the Green Technology Pilot Program.

A favorable decision on the Petition To Make Special Under The Green Technology Pilot Program is earnestly solicited.

Respectfully submitted,

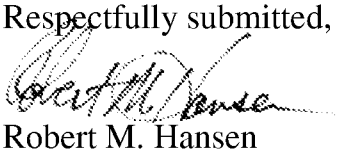

Date: January 25, 2011

Robert M. Hansen
Attorney for Applicants
Reg. No.: 43,656
CUSTOMER NO. 61275

**The Marbury Law Group, PLLC**
11800 Sunrise Valley Dr., Ste. 1000
Reston VA 20171
703-391-2900

**Doc Code: PET.GREEN**
**Document Description: Petition for Green Tech Pilot**

PTO/SB/420 (11-10)
*Approved for use through 01/31/2011. OMB 0651-0062*
U.S. Patent and Trademark Office; U. S. DEPARTMENT OF COMMERCE
Under the Paperwork Reduction Act of 1995, no persons are required to respond to a collection of information unless it displays a valid OMB control number.

# PETITION TO MAKE SPECIAL UNDER THE GREEN TECHNOLOGY PILOT PROGRAM

| Attorney Docket Number: 1361-003DIV-C1 | Application Number (if known): 13013501 | Filing date: 2011-01-25 |
|---|---|---|
| First Named Inventor: Craig R. Horne | | |
| Title: Redox Flow Battery System for Distributed Energy Storage | | |

**APPLICANT HEREBY REQUESTS TO PARTICIPATE IN THE GREEN TECHNOLOGY PILOT PROGRAM FOR THE ABOVE-IDENTIFIED APPLICATION. See Instruction Sheet on page 2.**

This petition must be timely filed electronically using the USPTO electronic filing system, EFS-Web.

1. By filing this petition:

   **Applicant is requesting early publication: Applicant hereby requests early publication under 37 CFR 1.219 and the publication fee set forth in 37 CFR 1.18(d) accompanies this request.**

2. By filing this petition: applicant is agreeing to make an election without traverse in a telephonic interview and elect an invention that meets the eligibility requirements for the Green Technology Pilot Program, if the Office determines that the claims are not obviously directed to a single invention. See Instruction Sheet.

3. This request is accompanied by statements of special status for the eligibility requirement.

4. The application contains no more than three (3) independent claims and twenty (20) total claims.

5. The application does not contain any multiple dependent claims.

6. Other attachments: _____

| Signature | Date January 25, 2011 |
|---|---|
| Name (Print/Typed) Robert M. Hansen | Registration Number 43,656 |

***Note:*** *Signatures of all the inventors or assignees of record of the entire interest or their representative(s) are required in accordance with 37 CFR 1.33 and 11.18. Please see 37 CFR 1.4(d) for the form of the signature. If necessary, submit multiple forms for more than one signature see below*.*

☐ *Total of _____ forms are submitted.

The information is required to obtain or retain a benefit by the public which is to file (and by the USPTO to process) an application. Confidentiality is governed by 35 U.S.C. 122 and 37 CFR 1.11 and 1.14. This collection is estimated to take 12 hours to complete, including gathering, preparing, and submitting the completed application form to the USPTO. Time will vary depending upon the individual case. Any comments on the amount of time you require to complete this form and/or suggestions for reducing this burden, should be sent to the Chief Information Officer, U.S. Patent and Trademark Office, U.S. Department of Commerce, P.O. Box 1450, Alexandria, VA 22313-1450. DO NOT SEND FEES OR COMPLETED FORMS TO THIS ADDRESS. **SEND TO: Commissioner for Patents, P.O. Box 1450, Alexandria, VA 22313-1450.**

*If you need assistance in completing the form, call 1-800-PTO-9199 and select option 2.*

UNITED STATES PATENT AND TRADEMARK OFFICE

UNITED STATES DEPARTMENT OF COMMERCE
United States Patent and Trademark Office
Address: COMMISSIONER FOR PATENTS
P.O. Box 1450
Alexandria, Virginia 22313-1450
www.uspto.gov

| APPLICATION NO. | FILING DATE | FIRST NAMED INVENTOR | ATTORNEY DOCKET NO. | CONFIRMATION NO. |
|---|---|---|---|---|
| 13/013,501 | 01/25/2011 | Craig R. Horne | 1361-003DIV-C1 | 8852 |

22208 7590 02/17/2011

The Marbury Law Group, PLLC
11800 SUNRISE VALLEY DRIVE
SUITE 1000
RESTON, VA 20191

| EXAMINER | |
|---|---|
| ARCIERO, ADAM A | |

| ART UNIT | PAPER NUMBER |
|---|---|
| 1727 | |

| NOTIFICATION DATE | DELIVERY MODE |
|---|---|
| 02/17/2011 | ELECTRONIC |

**Please find below and/or attached an Office communication concerning this application or proceeding.**

The time period for reply, if any, is set in the attached communication.

Notice of the Office communication was sent electronically on above-indicated "Notification Date" to the following e-mail address(es):

ptonotices@marburylaw.com

UNITED STATES PATENT AND TRADEMARK OFFICE

Commissioner for Patents
United States Patent and Trademark Office
P.O. Box 1450
Alexandria, VA 22313-1450
www.uspto.gov

2/17/2011

The Marbury Law Group, PLLC
11800 SUNRISE VALLEY DRIVE
SUITE 1000
RESTON VA 20191

In re Application of :
Horne et al. :
Application No. 13/013,501 :
Filed: 1/25/2011 :
Attorney Docket No. **1361-003DIV-C1** :

DECISION ON PETITION
TO MAKE SPECIAL UNDER
THE GREEN TECHNOLOGY
PILOT PROGRAM

This is a decision on the petition under 37 CFR 1.102, filed 1/25/2011, to make the above-identified application special under the pilot program for applications pertaining to Green Technologies as set forth in 74 Federal Register Notice 64666 (December 8, 2009) and amended by 75 Federal Register Notice 28554 (May 21, 2010) and 75 Federal Register Notice 69049 (November 10, 2010).

The petition is **GRANTED**.

A grantable petition to make an application special under 37 CFR 1.102 and the pilot program as set forth in 74 FR 64666 must be directed to a nonprovisional application filed under 35 USC 111(a) or be a national stage entry under 35 USC 371, exclusive of any reissue applications.

In order to qualify for special status, the following requirements must be met. 1) The application must have no more than 3 independent claims and no more than 20 total claims. 2) The application must not contain any multiple dependent claims. 3) The petition must state the basis for seeking special status, i.e., the claimed invention either: A) materially enhances the quality of the environment or B) materially contributes to: i) the discovery or development of renewable energy resources, ii) the more efficient utilization and conservation of energy resources, or iii) greenhouse gas emission reduction. 4) If the disclosure is not clear on its face that the claimed invention materially contributes under category (A) or (B), the petition must be accompanied by a statement by the applicant, assignee, or an attorney/agent registered to practice before the Office explaining how the materiality standard is met. 5) A statement that applicant will agree to make an election without traverse in a telephonic interview if a restriction requirement is made by the examiner. 6) The petition to make special must be filed electronically. 7) The petition must be filed at least one day prior to the date that a first Office Action appears in the Patent Application Information Retrieval (PAIR) system. 8) The petition must be accompanied by a

request for early publication in compliance with 37 CFR 1.219 and include the publication fee as set forth in 37 CFR 1.18(d).

The requirement for a fee for consideration of the petition to make special for applications pertaining to Green Technologies has been waived.

The instant petition complies with items 1 – 8 above. Accordingly, the above-identified application has been accorded "special" status.

Telephone inquires concerning this decision should be directed to Tom Dunn at 571-272-1171.

The application is being forwarded to the Technology Center Art Unit 1727 for action on the merits commensurate with this decision.

/Tom Dunn/

Tom Dunn
Quality Assurance Specialist
Technology Center 1700

**Doc Code: PPH.PCT.652**
**Document Description: Petition to make special under PCT-Patent Pros Hwy**

PTO/SB/20PCT-KR (06-10)
Approved for use through 01/31/2012. OMB 0651-0058
U.S. Patent and Trademark Office; U. S. DEPARTMENT OF COMMERCE
Under the Paperwork Reduction Act of 1995, no persons are required to respond to a collection of information unless it displays a valid OMB control number.

# REQUEST FOR PARTICIPATION IN THE PATENT COOPERATION TREATY - PATENT PROSECUTION HIGHWAY (PCT-PPH) PILOT PROGRAM BETWEEN THE KOREAN INTELLECTUAL PROPERTY OFFICE (KIPO) AND THE USPTO

| | | | |
|---|---|---|---|
| Application No: | 13/013,531 | Filing date: | 1/25/2011 |
| First Named Inventor: | Michael S. Arnold | | |
| Title of the Invention: | METHODS OF FABRICATING LARGE-AREA, SEMICONDUCTING NANOPERFORATED GRAPHENE MATERIALS | | |

**THIS REQUEST FOR PARTICIPATION IN THE PCT-PPH PILOT PROGRAM ALONG WITH THE REQUIRED DOCUMENTS MUST BE SUBMITTED VIA EFS-WEB. INFORMATION REGARDING EFS-WEB IS AVAILABLE AT HTTP://WWW.USPTO.GOV/EBC/EFS_HELP.HTML**

**APPLICANT HEREBY REQUESTS PARTICIPATION IN THE PCT-PPH PROGRAM AND PETITIONS TO MAKE THE ABOVE-IDENTIFIED APPLICATION SPECIAL UNDER THE PCT-PPH PROGRAM.**

The above-identified application is (1) a national stage entry of the corresponding PCT application, or (2) a national stage entry of another PCT application which claims priority to the corresponding PCT application, or (3) a national application that claims domestic/ foreign priority to the corresponding PCT application, or (4) a national application which forms the basis for the priority claim in the corresponding PCT application, or (5) a continuing application of a U.S. application that satisfies one of (1) to (4) above, or (6) a U.S. application that claims domestic benefit to a U.S. provisional application which forms the basis for the priority claim in the corresponding PCT application.

**The corresponding PCT application number(s) is/are:** PCT/US2011/022393

**The international filing date of the corresponding PCT application(s) is/are:**
1/25/2011

**I. List of Required Documents:**

a. **A copy of the latest international work product (WO/ISA, WO/IPEA, or IPER) in the above–identified corresponding PCT application(s)**

☐ Is attached.

☑ Is not attached because the document is already in the U.S. application.

b. **A copy of all claims which were indicated as having novelty, inventive step and industrial applicability in the above-identified corresponding PCT application(s).**

☐ Is attached.

☑ Is not attached because the document is already in the U.S. application.

c. **English translations of the documents in a. and b. above are attached (if the documents are not in the English language). A statement that the English translation is accurate is attached for the document in b. above.**



This collection of information is required by 35 U.S.C. 119, 37 CFR 1.55, and 37 CFR 1.102(d). The information is required to obtain or retain a benefit by the public, which is to file (and by the USPTO to process) an application. Confidentiality is governed by 35 U.S.C. 122 and 37 CFR 1.11 and 1.14. This collection is estimated to take 2 hours to complete, including gathering, preparing, and submitting the completed application form to the USPTO. Time will vary depending upon the individual case. Any comments on the amount of time you require to complete this form and/or suggestions for reducing this burden should be sent to the Chief Information Officer, U.S. Patent and Trademark Office, U.S. Department of Commerce, P.O. Box 1450, Alexandria, VA 22313-1450. DO NOT SEND FEES OR COMPLETED FORMS TO THIS ADDRESS.

PTO/SB/20PCT-KR (06-10)
Approved for use through 01/31/2012. OMB 0651-0058
U.S.Patent and Trademark Office; U.S. DEPARTMENT OF COMMERCE
Under the Paperwork Reduction Act of 1995, no persons are required to respond to a collection of information unless it displays a valid OMB control number.

# REQUEST FOR PARTICIPATION IN THE PCT-PPH PILOT PROGRAM BETWEEN THE KIPO AND THE USPTO

(continued)

| | |
|---|---|
| Application No.: | 13/013,531 |
| First Named Inventor: | Michael S. Arnold |

d. **(1) An information disclosure statement listing the documents cited in the international work products (ISR, WO/ISA, WO/IPEA, IPER) of the corresponding PCT application.**

☐ Is attached

☑ Has already been filed in the above-identified U.S. application on 11/16/2011

**(2) Copies of all documents (except) for U.S. patents or U.S. patent application publications)**

☐ Are attached.

☑ Have already been filed in the above-identified U.S. application on 11/16/2011

**II. Claims Correspondence Table:**

| Claims in US Application | Patentable Claims in the corresponding PCT Application | Explanation regarding the correspondence |
|---|---|---|
| 1-20 | 1-20 | The claims 1-20 in each application are identical to each other. |
| | | |
| | | |
| | | |
| | | |
| | | |
| | | |
| | | |
| | | |
| | | |
| | | |
| | | |
| | | |
| | | |
| | | |
| | | |
| | | |
| | | |
| | | |

**III. All the claims in the US application sufficiently correspond to the patentable claims in the corresponding PCT application.**

| | |
|---|---|
| Signature /Michelle Manning/ | Date December 20, 2011 |
| Name (Print/Typed) Michelle Manning | Registration Number 50,592 |

# Privacy Act Statement

The **Privacy Act of 1974 (P.L. 93-579)** requires that you be given certain information in connection with your submission of the attached form related to a patent application or patent. Accordingly, pursuant to the requirements of the Act, please be advised that: (1) the general authority for the collection of this information is 35 U.S.C. 2(b)(2); (2) furnishing of the information solicited is voluntary; and (3) the principal purpose for which the information is used by the U.S. Patent and Trademark Office is to process and/or examine your submission related to a patent application or patent. If you do not furnish the requested information, the U.S. Patent and Trademark Office may not be able to process and/or examine your submission, which may result in termination of proceedings or abandonment of the application or expiration of the patent.

The information provided by you in this form will be subject to the following routine uses:

1. The information on this form will be treated confidentially to the extent allowed under the Freedom of Information Act (5 U.S.C. 552) and the Privacy Act (5 U.S.C 552a). Records from this system of records may be disclosed to the Department of Justice to determine whether disclosure of these records is required by the Freedom of Information Act.
2. A record from this system of records may be disclosed, as a routine use, in the course of presenting evidence to a court, magistrate, or administrative tribunal, including disclosures to opposing counsel in the course of settlement negotiations.
3. A record in this system of records may be disclosed, as a routine use, to a Member of Congress submitting a request involving an individual, to whom the record pertains, when the individual has requested assistance from the Member with respect to the subject matter of the record.
4. A record in this system of records may be disclosed, as a routine use, to a contractor of the Agency having need for the information in order to perform a contract. Recipients of information shall be required to comply with the requirements of the Privacy Act of 1974, as amended, pursuant to 5 U.S.C. 552a(m).
5. A record related to an International Application filed under the Patent Cooperation Treaty in this system of records may be disclosed, as a routine use, to the International Bureau of the World Intellectual Property Organization, pursuant to the Patent Cooperation Treaty.
6. A record in this system of records may be disclosed, as a routine use, to another federal agency for purposes of National Security review (35 U.S.C. 181) and for review pursuant to the Atomic Energy Act (42 U.S.C. 218(c)).
7. A record from this system of records may be disclosed, as a routine use, to the Administrator, General Services, or his/her designee, during an inspection of records conducted by GSA as part of that agency's responsibility to recommend improvements in records management practices and programs, under authority of 44 U.S.C. 2904 and 2906. Such disclosure shall be made in accordance with the GSA regulations governing inspection of records for this purpose, and any other relevant ( *i.e.*, GSA or Commerce) directive. Such disclosure shall not be used to make determinations about individuals.
8. A record from this system of records may be disclosed, as a routine use, to the public after either publication of the application pursuant to 35 U.S.C. 122(b) or issuance of a patent pursuant to 35 U.S.C. 151. Further, a record may be disclosed, subject to the limitations of 37 CFR 1.14, as a routine use, to the public if the record was filed in an application which became abandoned or in which the proceedings were terminated and which application is referenced by either a published application, an application open to public inspection or an issued patent.
9. A record from this system of records may be disclosed, as a routine use, to a Federal, State, or local law enforcement agency, if the USPTO becomes aware of a violation or potential violation of law or regulation.

UNITED STATES PATENT AND TRADEMARK OFFICE

Commissioner for Patents
United States Patent and Trademark Office
P.O. Box 1450
Alexandria, VA 22313-1450
www.uspto.gov

MAILED

FEB 09 2012

OFFICE OF PETITIONS

BELL & MANNING, LLC
122 E. OLIN AVENUE, SUITE 290
MADISON, WI 53713

**In re Application of**
**Michael S. ARNOLD et al.**
**Application No.: 13/013,531**
**Filed: January 25, 2011**
**Attorney Docket No.: 00300-0148-02**
**For: Methods of Fabricating Large-Area, Semiconducting...**

**: DECISION ON REQUEST TO**
**: PARTICIPATE IN THE PATENT**
**: PROSECUTION HIGHWAY**
**: PROGRAM AND PETITION**
**: TO MAKE SPECIAL UNDER**
**: 37 CFR 1.102(a)**

This is a decision on the request to participate in the PCT Patent Prosecution Highway (PCT-PPH) pilot program and the petition under 37 CFR 1.102(a), filed on December 20, 2011, to make the above-identified application special.

The request and petition are **GRANTED**.

**Discussion**

A grantable request to participate in the PCT-PPH pilot program and petition to make special require:

(1) The U.S. application must have an eligible relationship to one or more PCT applications where the ISA or IPEA are the JPO, EPO, KIPO, IPAU, Russia, Spain, Finland, Austria, or USPTO;

(2) At least one claim in the PCT application has novelty, inventive step, and industrial applicability and must be free of any observations in Box VIII in the latest work product in the international stage or applicant must identify and explain why the claim(s) is/are not subject to the observation in Box VIII;

(3) Applicant must submit a copy of the claim(s) from the PCT application(s) that have novelty, inventive step, and industrial applicability along with an English translation thereof and a statement that the English translation is accurate, if the claims are not in the English language;

(4) All the claims in the U.S. application must sufficiently correspond or be amended to sufficiently correspond to the claim(s) that have novelty, inventive step, and industrial applicability in the PCT application(s);

(5) Examination of the U.S. application has not begun;

(6) Applicant must submit a copy of the latest international work product from the PCT application indicating that the claim(s) have novelty, inventive step, and industrial applicability along with an English translation thereof.

(7) Applicant must submit an IDS listing the documents cited by the PCT examiner in the international work product along with copies of documents except U.S. patents or U.S. patent application publications.

(8) Applicant is required to submit a claims correspondence table in English which indicates how all the claims in the U.S. application correspond to the claims indicated as having novelty, inventive step and industrial applicability in the latest international work product.

The request to participate in the PCT-PPH pilot program and petition comply with the above requirements. Accordingly, the above-identified application has been accorded "special" status.

Telephone inquiries concerning this decision should be directed to Joanne Hama at (571) 272-2911 or in her absence, the undersigned at (571) 272-7099.

All other inquiries concerning the examination or status of the application is accessible in the PAIR system at http://www.uspto.gov/ebc/index.html.

David Bucci
Petitions Examiner
Office of Petitions

UNITED STATES PATENT AND TRADEMARK OFFICE

Commissioner for Patents
United States Patent and Trademark Office
P.O. Box 1450
Alexandria, VA 22313-1450
www.uspto.gov

SHEPPARD, MULLIN, RICHTER & HAMPTON LLP
12275 EL CAMINO REAL, SUITE 200
SAN DIEGO, CA 92130

MAILED

JAN 12 2012

OFFICE OF PETITIONS

In re Application of :
Peter Leonard Krebs, et al. :
Application No. 13/013,571 :
Filed: January 25, 2011 :
Attorney Docket No.: 25HC-156960 :

DECISION GRANTING PETITION
UNDER 37 CFR 1.137(f)

This is a decision on the petition, filed November 28, 2011, to revive the instant nonprovisional application for failure to timely notify the U.S. Patent and Trademark (USPTO) of the filing of an application in a foreign country, or under a multinational treaty that requires publication of applications eighteen months after filing. *See* 37 CFR 1.137(f).

The petition is **GRANTED**.

Petitioner indicates that the instant nonprovisional application is the subject of an application filed in an eighteen month publication country on September 27, 2011. However, the USPTO was unintentionally not notified of this filing within 45 days subsequent to the filing of the subject application in an eighteen month publication country.

In view of the above, this application became abandoned pursuant to 35 U.S.C. §122(b)(2)(B)(iii) and 37 CFR 1.213(c) for failure to timely notify the Office of the filing of an application in a foreign country or under a multilateral international agreement that requires publication of applications 18 months after filing.

A petition to revive an application abandoned pursuant to 35 U.S.C. § 122(b)(2)(B)(iii) for failure to notify the USPTO of a foreign filing must be accompanied by:

(1) the required reply which is met by the notification of such filing in a foreign country or under a multinational treaty;
(2) the petition fee as set forth in 37 CFR 1.17(m); and
(3) a statement that the entire delay in filing the required reply from the due date of the reply until the filing of a grantable petition was unintentional.

The petition is found to be in compliance with 37 CFR 1.137(b). Accordingly, the failure to timely notify the USPTO of a foreign or international filing within 45 days after the date of filing of such foreign or international application as provided by 35 U.S.C. § 122(b)(2)(B)(iii) and 37 CFR 1.213(c) is accepted as having been unintentionally delayed.

The previous Request and Certification under 35 U.S.C. § 122(b)(2)(B)(i) has been rescinded. A Notice Regarding Rescission of Nonpublication Request which sets forth the projected publication date of April 19, 2012 accompanies this decision on petition.

Any inquiries concerning this decision may be directed to the undersigned at (571) 272-3204.

This application is being referred to the Technology Center 2133 for examination in due course.

/SDB/

Sherry D. Brinkley
Petitions Examiner
Office of Petitions

ATTACHMENT: Notice Regarding Rescission of Nonpublication Request

UNITED STATES PATENT AND TRADEMARK OFFICE

UNITED STATES DEPARTMENT OF COMMERCE
United States Patent and Trademark Office
Address: COMMISSIONER FOR PATENTS
P.O. Box 1450
Alexandria, Virginia 22313-1450
www.uspto.gov

| APPLICATION NUMBER | FILING OR 371(C) DATE | FIRST NAMED APPLICANT | ATTY. DOCKET NO./TITLE |
|---|---|---|---|
| 13/013,571 | 01/25/2011 | PETER LEONARD KREBS | 25HC-156960 |

**CONFIRMATION NO. 8997**

30764
SHEPPARD, MULLIN, RICHTER & HAMPTON LLP
12275 EL CAMINO REAL, SUITE 200
SAN DIEGO, CA 92130

**NONPUBLICATION RESCISSION LETTER**

*OC000000051926482*

Date Mailed: 01/12/2012

## Communication Regarding Rescission Of Nonpublication Request and/or Notice of Foreign Filing

Applicant's rescission of the previously-filed nonpublication request and/or notice of foreign filing is acknowledged. The paper has been reflected in the Patent and Trademark Office's (USPTO's) computer records so that the earliest possible projected publication date can be assigned.

The projected publication date is 04/19/2012.

If applicant rescinded the nonpublication request before or on the date of "foreign filing,"[1] then no notice of foreign filing is required.

If applicant foreign filed the application after filing the above application and before filing the rescission, and the rescission did not also include a notice of foreign filing, then a notice of foreign filing (not merely a rescission) is required to be filed within 45 days of the date of foreign filing. See 35 U.S.C. § 122(b)(2)(B)(iii), and Clarification of the United States Patent and Trademark Office's Interpretation of the Provisions of 35 U.S.C. § 122(b)(2)(B)(ii)-(iv), 1272 Off. Gaz. Pat. Office 22 (July 1, 2003).

If a notice of foreign filing is required and is not filed within 45 days of the date of foreign filing, then the application becomes abandoned pursuant to 35 U.S.C. § 122(b)(2)(B)(iii). In this situation, applicant should either file a petition to revive or notify the Office that the application is abandoned. See 37 CFR 1.137(f). Any such petition to revive will be forwarded to the Office of Petitions for a decision. Note that the filing of the petition will not operate to stay any period of reply that may be running against the application.

Questions regarding petitions to revive should be directed to the Office of Petitions at (571) 272-3282.

[1] Note, for purpose of this notice, that "foreign filing" means "filing an application directed to the same invention in another country, or under a multilateral international agreement, that requires publication of applications 18 months after filing".

/sdbrinkley/

Office of Data Management, Application Assistance Unit (571) 272-4000, or (571) 272-4200, or 1-888-786-0101

UNITED STATES PATENT AND TRADEMARK OFFICE

UNITED STATES DEPARTMENT OF COMMERCE
United States Patent and Trademark Office
Address: COMMISSIONER FOR PATENTS
P.O. Box 1450
Alexandria, Virginia 22313-1450
www.uspto.gov

| APPLICATION NO. | FILING DATE | FIRST NAMED INVENTOR | ATTORNEY DOCKET NO. | CONFIRMATION NO. |
|---|---|---|---|---|
| 13/013,667 | 01/25/2011 | Tohru Fukuda | SUTOSH.767AUS | 9163 |

20995 7590 07/08/2011

KNOBBE MARTENS OLSON & BEAR LLP
2040 MAIN STREET
FOURTEENTH FLOOR
IRVINE, CA 92614

| EXAMINER | |
|---|---|
| ART UNIT | PAPER NUMBER |
| 2189 | |

| NOTIFICATION DATE | DELIVERY MODE |
|---|---|
| 07/08/2011 | ELECTRONIC |

**Please find below and/or attached an Office communication concerning this application or proceeding.**

The time period for reply, if any, is set in the attached communication.

Notice of the Office communication was sent electronically on above-indicated "Notification Date" to the following e-mail address(es):

jcartee@kmob.com
efiling@kmob.com
eOAPilot@kmob.com

UNITED STATES PATENT AND TRADEMARK OFFICE

Commissioner for Patents
United States Patent and Trademark Office
P.O. Box 1450
Alexandria, VA 22313-1450
www.uspto.gov

KNOBBE MARTENS OLSON & BEAR LLP
2040 MAIN STREET
FOURTEENTH FLOOR
IRVINE CA 92614

In re Application of: T. FUKUDA.
Application No. 13/013,667
Attorney Docket #: **SUTOSH.767AUS**
Filed: January 25, 2011
For: **SEMICONDUCTOR STORAGE DEVICE AND CONTROL METHOD THEREOF**

DECISION ON REQUEST TO PARTICIPATE IN PATENT PROSECUTION HIGHWAY PROGRAM AND PETITION TO MAKE SPECIAL UNDER 37 CFR 1.102(a)

This is a decision on the renewed request to participate in the Patent Prosecution Highway (PPH) program and the petition under 37 CFR 1.102(a), filed June 10, 2011 to make the above-identified application special.

The petition is **GRANTED.**

A grantable request to participate in the PPH program and petition to make special require:

(1) The U.S. application is
(a) a Paris Convention application which either
(i) validly claims priority under 35 U.S.C. 119(a) and 37 CFR 1.55 to one or more applications filed in the JPO, or
(ii) validly claims priority to a PCT application that contains no priority claims,

Or

(b) a national stage application under the PCT (an application which entered the national stage in the U.S. from a PCT international application after compliance with 35 U.S.C. 371), which PCT application
(i) validly claims priority to an application filed in the JPO, or
(ii) validly claims priority to a PCT application that contains no priority claims, or
(iii) contains no priority claim,

Or

(c) a so-called bypass application filed under 35 U.S.C. 111 (a) which validly claims benefit under 35 U.S.C. 120 to a PCT application, which PCT application
(i) validly claims priority to an application filed in the JPO, or
(ii) validly claims priority to a PCT application that contains no priority claims, or
(iii) contains no priority claim.

Where the JPO application that contains the allowable/patentable claims is not the same application for which priority is claimed in the U.S. application, applicant must identify the relationship between the JPO application that contains the allowable/patentable claims and the JPO priority application claimed in the U.S. application.

(2) Applicant must submit a copy of:
a. The allowable/patentable claim(s) from the JPO application(s) or if a copy of the allowable/patentable claims is available via the Dossier Access System (DAS) applicant may request the USPTO obtain a copy from the DAS, however if the USPTO is unable to obtain a copy from the DAS the applicant will be required to submit a copy;
b. An English translation of the allowable/patentable claim(s) and
c. A statement that the English translation is accurate;

Effective January 29, 2010, for a period of two years ending on January 28, 2012, the USPTO will accept claims written in dependent form in the U.S. application which are narrower in scope than the allowable/patentable claims in the Japanese application.

(3) Applicant must:
a. Ensure all the claims in the U.S. application must sufficiently correspond or be amended to sufficiently correspond to the allowable/patentable claim(s) in the JPO application(s) and
b. Submit a claims correspondence table in English;

(4) Examination of the U.S. application has not begun;

(5) Applicant must submit:
a. Documentation of prior office action:
i. a copy of the office action(s)just prior to the "Decision to Grant a Patent" from each of the JPO application(s) containing the allowable/patentable claim(s) or
ii. if the allowable/patentable claims(s) are from a "Notification of Reasons for Refusal" then the Notification of Reasons for Refusal or
iii. if the JPO application is a first action allowance then no office action from the JPO is necessary should be indicated on the request/petition form;

Further, if a copy of the documents from a above is available via the Dossier Access System (DAS) applicant may request the USPTO obtain a copy from the DAS, however if the USPTO is unable to obtain a copy from the DAS the applicant will be required to submit a copy;

b. An English language translation of the JPO Office action from (5)(a)(i)-(ii) above

c. A statement that the English translation is accurate;

Effective January 29, 2010, Applicants may submit a machine translation into the English language of the copy of the latest JPO office action just prior to the

"Decision to Grant a Patent" (e.g., the latest "Notification of Reasons for Refusal") from each of the JPO application(s) containing the allowable/patentable claims that are the basis for the PPH request. The machine translation into the English language must be one that is provided by the JPO. That is, the machine translation into the English language cannot be one that is provided by a commercial service. Where a machine translation into the English language of the copy of the latest JPO office action (obtained from the JPO) is submitted, it will not be necessary to include a statement that the English translation is accurate.

(6) Applicant must submit:
   a. An IDS listing the documents cited by the JPO examiner in the JPO office action (unless already submitted in this application)
   b. Copies of the documents except U.S. patents or U.S. patent application publications (unless already submitted in this application);

The petition is **GRANTED.**

The request to participate in the PPH pilot program and petition are found to comply with the above requirements. Accordingly, the above-identified application has been accorded "special" status.

Telephone inquiries concerning this decision should be directed to Mano Padmanabhan at 571-272-4210.

All other inquiries concerning the examination or status of the application is accessible in the PAIR system at http://www.uspto.gov/ebc/index.html.

The application is being forwarded to the examiner for action on the merits commensurate with this decision.

/Mano Padmanabhan/

Mano Padmanabhan
Quality Assurance Specialist, Technology Center 2100, Workgroup 2180
571-272-4210

UNITED STATES PATENT AND TRADEMARK OFFICE

Commissioner for Patents
United States Patent and Trademark Office
P.O. Box 1450
Alexandria, VA 22313-1450
www.uspto.gov

MAILED

APR 29 2011

OFFICE OF PETITIONS

KNOBBE MARTENS OLSON & BEAR LLP
2040 MAIN STREET
FOURTEENTH FLOOR
IRVINE CA 92614

In re Application of :
Sanders, Ray W. :
Application No. 13/013,717 : DECISION ON PETITION
Filed: January 25, 2011 : TO MAKE SPECIAL UNDER
Attorney Docket No. **SANET.001A** : 37 CFR 1.102(c)(1)
:

This is a decision on the petition under 37 CFR 1.102(c)(1), filed April 11, 2011, to make the above-identified application special based on applicant's age as set forth in M.P.E.P. § 708.02, Section IV.

The petition is **GRANTED**.

A grantable petition to make an application special under 37 CFR 1.102(c)(1) and MPEP § 708.02, Section IV: Applicant's Age must be accompanied by evidence showing that at least one of the applicants is 65 years of age, or more, such as a birth certificate or a statement by applicant. No fee is required

The instant petition includes a statement by Ray Sanders, attesting to his age. Accordingly, the above-identified application will be accorded "special" status.

Telephone inquiries concerning this decision should be directed to Tredelle Jackson at 571-272-2783.

All other inquiries concerning either the examination or status of the application should be directed to the Technology Center.

This application is being referred to the Office of Patent Application Processing for processing. This application will be accorded "special" status when pre-examination processing is done.

/Tredelle D. Jackson/
Paralegal Specialist
Office of Petitions

UNITED STATES PATENT AND TRADEMARK OFFICE

Commissioner for Patents
United States Patent and Trademark Office
P.O. Box 1450
Alexandria, VA 22313-1450
www.uspto.gov

TOMAS FRIEND, LLC
886 INDIAN ROCK ROAD
STRASBURG VA 22641

**MAILED**

DEC 15 2011

**OFFICE OF PETITIONS**

In re Application of :
Roberto DiSalvo :
Application No. 13/013,762 : ON PETITION
Filed: Janaury 25, 2011 :
Attorney Docket Number: CFDRCads001A :

This is a decision on the petition under 37 CFR 1.137(b),[1] filed December 4, 2011, to revive the above-identified application.

The petition is **GRANTED**.

This application became abandoned April 12, 2011, for failure to timely reply to the Notice to File Corrected Application Papers mailed on February 11, 2011, which set a two (2) month shortened period for reply. No extensions of the time for reply in accordance with 37 CFR 1.136(a) were obtained prior to the abandonment. Accordingly, the Notice of Abandonment was mailed October 26, 2011.

Receipt of the substitute specification in compliance with 37 CFR 1.52, 1.121(b)(3) and 1.125 is acknowledged.

The application is being forwarded to the Office of Patent Application Processing for further processing.

Telephone inquiries concerning this matter should be directed to the undersigned Petitions Attorney at (571) 272-3212.

Patricia Faison-Ball
Senior Petitions Attorney
Office of Petitions

---

[1]Effective December 1, 1997, the provisions of 37 CFR 1.137(b) now provide that where the delay in reply was unintentional, a petition may be filed to revive an abandoned application or a lapsed patent pursuant to 37 CFR 1.137(b). A grantable petition filed under the provisions of 37 CFR 1.137(b) must be accompanied by:

(1) the required reply, unless previously filed. In a nonprovisional application abandoned for failure to prosecute, the required reply may be met by the filing of a continuing application. In a nonprovisional application filed on or after June 8, 1995, and abandoned for failure to prosecute, the required reply may also be met by the filing of a request for continued examination in compliance with § 1.114. In an application or patent, abandoned or lapsed for failure to pay the issue fee or any portion thereof, the required reply must be the payment of the issue fee or any outstanding balance thereof. In an application abandoned for failure to pay the publication fee, the required reply must include payment of the publication fee.

(2) the petition fee as set forth in 37 CFR 1.17(m);

(3) a statement that the entire delay in filing the required reply from the due date for the reply until the filing of a grantable petition pursuant to 37 CFR 1.137(b) was unintentional. The Director may require additional information where there is a question whether the delay was unintentional; and

(4) any terminal disclaimer (and fee as set forth in 37 CFR 1.20(d)) required pursuant to 37 CFR 1.137(c)).

UNITED STATES PATENT AND TRADEMARK OFFICE

UNITED STATES DEPARTMENT OF COMMERCE
United States Patent and Trademark Office
Address: COMMISSIONER FOR PATENTS
P.O. Box 1450
Alexandria, Virginia 22313-1450
www.uspto.gov

| APPLICATION NO. | FILING DATE | FIRST NAMED INVENTOR | ATTORNEY DOCKET NO. | CONFIRMATION NO. |
|---|---|---|---|---|
| 13/013,823 | 01/26/2011 | Sarah J. Deitch | 2010078-US2 | 9444 |

69289 7590 03/15/2011

COLOPLAST A/S
Attention: Corporate Patents
Holtedam 1
DK-3050 Humlebaek,
DENMARK

| EXAMINER | |
|---|---|
| ART UNIT | PAPER NUMBER |
| 3735 | |

| NOTIFICATION DATE | DELIVERY MODE |
|---|---|
| 03/15/2011 | ELECTRONIC |

**Please find below and/or attached an Office communication concerning this application or proceeding.**

The time period for reply, if any, is set in the attached communication.

Notice of the Office communication was sent electronically on above-indicated "Notification Date" to the following e-mail address(es):

patent@coloplast.com
dkbvd@coloplast.com

UNITED STATES PATENT AND TRADEMARK OFFICE

MAR 14 2011

Commissioner for Patents
United States Patent and Trademark Office
P.O. Box 1450
Alexandria, VA 22313-1450
www.uspto.gov

COLOPLAST A/S
Attention: Corporate Patents
Holtedam 1
DK-3050 Humlebaek DK DENMARK

| | | |
|---|---|---|
| In re application of | : | **DECISION ON REQUEST TO** |
| Sarah Deitch | : | **PARTICIPATE IN PATENT** |
| Application No. 13/013,823 | : | **PROSECUTION HIGHWAY** |
| Filed: January 26, 2011 | : | **PROGRAM AND PETITION** |
| For: SACROCOLPOPEXY SUPPORT AND METHOD OF IMPLANTATION | : | **TO MAKE SPECIAL UNDER 37 CFR 1.102(a)** |

This is a decision on the request to participate in the Patent Prosecution Highway (PPH) program and the petition under 37 CFR 1.102(a), filed January 26, 2011, to make the above-identified application special.

The request and petition are **DISMISSED**.

A grantable request to participate in the PPH pilot program and petition to make special require:

(1) The U.S. application must validly claim priority under 35 U.S.C. 119(a) to one or more applications filed in the DKPTO, or USPTO;
(2) Applicant must submit a copy of the allowable/patentable claim(s) from the DKPTO application(s) along with an English translation thereof and a statement that the English translation is accurate;
(3) All the claims in the U.S. application must sufficiently correspond or be amended to sufficiently correspond to the allowable/patentable claim(s) in the DKPTO application(s);
(4) Examination of the U.S. application has not begun;
(5) Applicant must submit a copy of the latest Office action from each of the DKPTO application(s) containing the allowable/patentable claim(s) along with an English translation thereof and a statement that the English translation is accurate;
(6) Applicant must submit an IDS listing the documents cited by the DKPTO examiner in the DKPTO Office action along with copies of documents except U.S. patents or U.S. patent application publications.

The request to participate in the PPH pilot program and petition fail to include:

(1) The U.S. application must validly claim priority under 35 U.S.C. 119(a) to one or more applications filed in the DKPTO, or USPTO;

Applicant failed to included the DKPTO/PCT application number(s) is/are in the Form PTO/SB/20DK
Note, Applicant's Declaration cited Application No. PA 2010 70241; however, it is unclear from the record how this case related to the US application. There is no validly claim priority under 35USC 119(a) cited in the Declaration.
(2) Applicant must submit a copy of the allowable/patentable claim(s) from the DKPTO application(s) along with an English translation thereof and a statement that the English translation is accurate;
Also see #1.
(3) All the claims in the U.S. application must sufficiently correspond or be amended to sufficiently correspond to the allowable/patentable claim(s) in the DKPTO application(s);
Also see #1.

Applicant is given a time period of **ONE MONTH or THIRTY DAYS**, whichever is longer, to correct the deficiencies. **NO EXTENSION OF TIME UNDER 37 CFR 1.136 IS PERMITTED.** If the deficiencies are not corrected with the time period given, the application will await action in its regular turn. All replies to a decision to dismiss must be submitted by EFS-Web using the document description "Petition to make special under Patent Prosecution Highway."

Any inquiry regarding this decision should be directed to Mikado Buiz, Quality Assurance Specialist, at (571) 272-6578.

/ Mikado Buiz /

Mikado Buiz,
Quality Assurance Specialist
Technology Center 3600

MB/MB: 03/14/11

UNITED STATES PATENT AND TRADEMARK OFFICE

UNITED STATES DEPARTMENT OF COMMERCE
United States Patent and Trademark Office
Address: COMMISSIONER FOR PATENTS
P.O. Box 1450
Alexandria, Virginia 22313-1450
www.uspto.gov

| APPLICATION NO. | FILING DATE | FIRST NAMED INVENTOR | ATTORNEY DOCKET NO. | CONFIRMATION NO. |
|---|---|---|---|---|
| 13/013,823 | 01/26/2011 | Sarah J. Deitch | 2010078-US2 | 9444 |

69289 7590 04/04/2011

COLOPLAST A/S
Attention: Corporate Patents
Holtedam 1
DK-3050 Humlebaek,
DENMARK

| EXAMINER | |
|---|---|
| ART UNIT | PAPER NUMBER |
| 3735 | |

| NOTIFICATION DATE | DELIVERY MODE |
|---|---|
| 04/04/2011 | ELECTRONIC |

**Please find below and/or attached an Office communication concerning this application or proceeding.**

The time period for reply, if any, is set in the attached communication.

Notice of the Office communication was sent electronically on above-indicated "Notification Date" to the following e-mail address(es):

patent@coloplast.com
dkbvd@coloplast.com

UNITED STATES PATENT AND TRADEMARK OFFICE

Commissioner for Patents
United States Patent and Trademark Office
P.O. Box 1450
Alexandria, VA 22313-1450
www.uspto.gov

COLOPLAST A/S
Attention: Corporate Patents
Holtedam 1
DK-3050 Humlebaek DK DENMARK

In re Application of:
DEITCH, SARAH J.
Application No.: 13/013,823
Filed: Jan. 26, 2011
Docket: 2010078-US2
Title: SACROCOLPOPEXY SUPPORT AND METHOD OF IMPLANTATION

DECISION ON REQUEST TO PARTICIPATE IN PATENT PROSECUTION HIGHWAY PILOT PROGRAM AND PETITION TO MAKE SPECIAL UNDER 37 CFR 1.102(a)

This is a decision on the renewed request to participate in the Patent Prosecution Highway (PPH) pilot program and the petition under 37 CFR 1.102(a), filed March 31, 2011 to make the above-identified application special.

The request and petition are granted.

A grantable request to participate in the PPH pilot program and petition to make special require:

(1) The U.S. application must validly claim priority under 35 U.S.C. 119(a) to one or more applications filed in the KIPO;
(2) Applicant must submit a copy of the allowable/patentable claim(s) from the KIPO application(s) along with an English translation thereof and a statement that the English translation is accurate;
(3) All the claims in the U.S. application must sufficiently correspond or be amended to sufficiently correspond to the allowable/patentable claim(s) in the KIPO application(s);
(4) Examination of the U.S. application has not begun;
(5) Applicant must submit a copy of all the office actions from each of the KIPO application(s) containing the allowable/patentable claim(s) along with an English translation thereof and a statement that the English translation is accurate; and
(6) Applicant must submit an IDS listing the documents cited by the KIPO examiner in the KIPO office action along with copies of documents except U.S. patents or U.S. patent application publications.

In light of the petition being properly submitted, the request to participate in the PPH program and the petition comply with the above requirements. Accordingly, the above-identified application has been accorded "special" status.

The applicant is encouraged to cite and submit all relevant prior art references, if any, to facilitate examination in this application.

Other inquiries concerning the examination or status of the application should be directed to Chuck Marmor, the SPE of Art Unit 3735 at 571-272-4730 for Class 600/30 and also accessible in the PAIR system at http://www.uspto.gov/ebc.index.html.

All other inquiries concerning the examination or status of the application should be directed to the Patent Application Information Retrieval (PAIR) system.

This application will be forwarded and docketed to an examiner for action on the merits commensurate with this decision.

Telephone inquiries concerning this decision should be directed to Henry C. Yuen, at 571-272-4856.

The petition is **granted.**

/Henry C. Yuen/

_____

Henry C. Yuen, Special Programs Examiner
Technology Center 3700 – Mechanical Engineering,
Manufacturing and Products
571-272-4856

UNITED STATES PATENT AND TRADEMARK OFFICE

Commissioner for Patents
United States Patent and Trademark Office
P.O. Box 1450
Alexandria, VA 22313-1450
www.uspto.gov

**MARTIN D. MOYNIHAN d/b/a PRTSI, INC.**
**P.O. BOX 16446**
**ARLINGTON VA 22215**

**MAILED**

JAN 30 2012

**OFFICE OF PETITIONS**

In re Application of:
Eliahu M. Kritchman et al.
Application No. 13/013,848
Filed: January 26, 2011
Attorney Docket No. 50601

NOTICE

This is a notice regarding your request for acceptance of a fee deficiency submission under 37 CFR 1.28 filed January 17, 2012. On September 1, 1998, the Court of Appeals for the Federal Circuit held that 37 CFR 1.28(c) is the sole provision governing the time for correction of the erroneous payment of the issue fee as a small entity. **See DH Technology v. Synergystex International, Inc. 154 F.3d 1333, 47 USPQ2d 1865 (Fed. Cir. Sept. 1, 1998).**

The Office no longer investigates or rejects original or reissue applications under 37 CFR 1.56. **1098 Off. Gaz. Pat. Office 502 (January 3, 1989).** Therefore, nothing in this Notice is intended to imply that an investigation was done.

Your fee deficiency submission under 37 CFR 1.28 is hereby accepted. The petition is **GRANTED**.

This application is no longer entitled to small entity status. Accordingly, all future fees paid in this application must be paid at the large entity rate.

This file is being forwarded to Technology Center 1744.

Telephone inquiries related to this decision should be directed to the Kimberly Inabinet at (571) 272-4618.

/Kimberly Inabinet/
Kimberly Inabinet
Petitions Examiner
Office of Petitions

UNITED STATES PATENT AND TRADEMARK OFFICE

Commissioner for Patents
United States Patent and Trademark Office
P.O. Box 1450
Alexandria, VA 22313-1450
www.uspto.gov

APR 18 2011

Forest Concepts. LLC
Suite D-110
3320 West Valley Highway North
Auburn WA 98001-2457

In re Application of: Lanning et al.
Application No.: 13/013929
Filed: January 26, 2011
Title: ENGINEERED TALL GRASS BIOMASS BALING SYSTEM

DECISION ON PETITION TO MAKE SPECIAL FOR NEW APPLICATION UNDER 37 C.F.R. § 1.102 & M.P.E.P. § 708.02

This is a decision on the petition filed on January 26, 2011 to make the above-identified application special for accelerated examination procedure under 37 C.F.R. § 1.102(d).

The petition to make the application special is **DISMISSED**.

REGULATION AND PRACTICE

A grantable petition to make special under 37 C.F.R. § 1.102(d) and pursuant to the "Change to Practice for Petitions in Patent Applications to Make Special and for Accelerated Examination" published in the Federal Register on June 26, 2006 (71 Fed. Reg. 36323), must satisfy the following conditions:

I. Conditions Regarding the Application:

1. the application must be a non-reissue utility or design application filed under 37 CFR 1.111(a);

2. the application, the petition and the required fees must be filed electronically using the USPTO's electronic filing system (EFS), or EFS-web; if not filed electronically, a statement asserting that EFS and EFS-web were not available during the normal business hours.

3. at the time of filing, the application must be complete under 37 CFR 1.51 and in condition for examination;

4. the application must contain three or fewer independent claims and twenty or fewer total claims and the claims must be directed to a single invention.

II. Conditions Regarding the Petition:

The petition must:

1. be filed with the application;

2. include a statement that applicant agrees not to separately argue the patentability of any independent claim during any appeal in the application;

3. include a statement that applicant agrees to make an election without traverse in a telephone interview.

4. include a statement that applicant agrees to conduct such an interview when requested by the examiner.

5. include a statement, made based on a good faith belief, that a preexamination search in compliance with the following requirements, was conducted, including an identification of the field of search by United States class and subclass, where applicable, and for database searches, the search logic or chemical structure or sequence used as a query, the name of the file(s) searched and the database service, and the date of the search.

The preexamination search must:

5.1 involve U.S. patents and patent application publications, foreign patent documents, and non-patent literature, unless the applicant can justify with reasonable certainty that no references more pertinent than those already identified are likely to be found in the eliminated sources and includes such a justification with this statement;

5.2. be directed to the claimed invention and encompass all of the features of the claims, giving the claims the broadest reasonable interpretation;

5.3. encompass the disclosed features that may be claimed.

6. must provide in support of the petition an accelerated examination support document. An accelerated examination support document must include:

6.1. an information disclosure statement (IDS) in compliance with 37 CFR 1.98 citing each reference deemed most closely related to the subject matter of each of the claims;

6.2. an identification of all the limitations in the claims that are disclosed by the reference specifying where the limitation is disclosed in the cited reference;

6.3. a detailed explanation of how each of the claims are patentable over the references cited with particularity required by 37 CFR 1.111(b) and (c);

6.4. a concise statement of the utility of the invention as defined in each of the independent claims (unless the application is a design application);

6.5. a showing of where each limitation of the claims finds support under 35 U.S.C. 112, first paragraph, in the written description of the specification. If applicable, the showing must also identify: (1) each means- (or step) plus-function claim element that invokes consideration under 35 U.S.C. 112, sixth paragraph; and (2) the structure, material, or acts in the specification that corresponds to each means- (or step) plus-function claim element that invokes consideration under 35 U.S.C. 112, sixth paragraph; if the application claims the benefit of one or more applications under title 35, United States Code, the showing must also include where each limitation of the claims finds support under 35 U.S.C. 112, first paragraph, in each such application in which such supports exists;

6.6. an identification of any cited references that may be disqualified under 35 U.S.C. 103(c).

## REVIEW OF FACTS

The conditions I:1-4, II: 1-4, 6 and 6.1 above are considered to have been met. However, the petition fails to comply with conditions II : 5, 5.1, 5.2, 6.2, 6.3, 6.4, 6.5 and 6.6 above.

Therefore, the petition fails to meet the required conditions to be accorded special status under the accelerated examination procedure.

**Discussion**

When referring to "the petition" hereinbelow, the received papers under consideration include the PTO/SB/28 form, the "pre-examination search document" including pages 1-3; the "accelerated examination support document" comprising pages 1-34, and an Information Disclosure Statement including form PTO/SB/08A.

Initially, it is noted that the terminal disclaimer is not approved since there is no power of attorney of record.

The new limitations to the claims in the amendment filed on April 4, 2011 must shown to be encompassed by the search and be included in any updated examination support document.

Regarding the requirement of section II element 5 and 5.3 outlined above, there is no statement of good faith, a statement with regards to what the search encompassed or an indication of the disclosed features that may be claimed. The following statements are examples that could be added to the end of the pre-examination search to meet these requirements.

Search Directed to the Invention

The pre-examination search was directed to the claimed invention, encompassing all the features of the claims and giving the claims their broadest reasonable interpretation.

Search Directed to the Disclosure

No disclosed features that are unclaimed at this time are currently seen as features that may be claimed later.

Search Report from a Foreign Patent Office

No search report from a foreign patent office is provided here as the pre-examination search.

Statement of Good Faith

All statements above in support of the petition to make special are based on a good faith belief that the search was conducted in compliance with the requirements of this rule.

Regarding the requirements of section II element 5.1 and 5.2 outlined above, it appears the search outlined in the petition omitted a critical search area by not searching in class 100 subclasses 8, 50, 178, 179, 240, and 245. In addition, petitioner must specifically spell out any text searching that was done along with what database was used; general descriptions of the text search is not sufficient.

Regarding the requirements of section II element 6.2 outlined above, the petition fails to identify all of the limitations in the application claims that are disclosed in each of the reference(s) and where the limitation is disclosed in each of the cited reference. As stated in the policy published in the Federal Register on June 26, 2006 (71 Fed. Reg. 36323), for each reference cited, the

examination support document must include an identification of all the limitations in the claims that are disclosed by the reference specifying where the limitation is disclosed in the cited reference. The policy statement does not caveat "the independent claims", nor does it allow for grouping and general discussions. A grantable petition must delineate every limitation of every claim and identify where the equivalent limitation is disclosed in each piece of prior art cited on the IDS. As is published on www.uspto.gov/web/patents/accelerated/ in "Guidelines for Applicants under the new accelerated examination procedures"):

> *For each reference cited, the accelerated examination support document must include an identification of all the limitations in the claims that are disclosed by the reference specifying where the limitation is disclosed in the cited reference. Applicants should specify where in each of the cited references the particular claim limitations are found. This process is intended to be analogous to the analysis an examiner uses when locating a relevant prior art reference and then determining whether the reference contains the claimed limitation. For each claimed limitation, the examiner would consider the disclosure of the reference and all reasonable portions in the reference where the limitation is shown. When preparing an Office Action, the examiner would correlate the limitation to the portion of reference which best characterizes the limitation. This part of the AESD is not intended to be an exhaustive listing of every conceivable subjective interpretation of how a claim limitation may read on the reference. Applicants should point out what are considered to be the relevant representations of the limitation in the reference. A limitation may be found in more than one portion of the reference and should be pointed out, yet the intention is not to have applicants point out every conceivable interpretation. The USPTO will adopt a rule of reason when evaluating this portion of the AESD. Unless the representation is so deficient that it would materially effect examination of the application (e.g., numerous instances where the limitations are not shown where applicant states they are), the representation will be deemed to be sufficient for this part of the AESD.*

In the instant petition, petitioner does not address each limitation and where it is (or state that it is not) found in each closest prior art. The general description of the references does not address the claims limitation by limitation. By not addressing all limitations, it is not clear whether a limitation was overlooked in the discussion of the reference or not found in the reference.

Additionally, every reference found in the IDS is not discussed. If applicant wishes to cite references that are not required in an AESD for the examiner to consider, applicant may submit such references in a separate IDS in compliance with 37 CFR §1.97 and §1.98. Applicant should clearly identify the IDS of the AESD that is in support of the petition to make special and, similarly, applicant should clearly identify the separate IDS that is not in support of the petition. Consistent with 37 CFR §10.18, any reference submitted in a separate IDS that is not part of an AESD will be treated as a representation by applicant to the USPTO that no reference submitted in the separate IDS is deemed closer to the subject matter of at least one claim than the references provided in the AESD.

Similarly, with respect to the requirements of section II element 6.3 outlined above, the petition fails to provide a detailed explanation of how each of the claims are patentable over (each of) the reference(s) with particularity required by 37 CFR 1.111(b) and (c). Petitioners should be

specific in their explanation and include the identification of specific claim limitations that support their position, where appropriate. Petitioners must distinguish each claim from each piece of prior art cited. General statements that the claims are neither anticipated nor rendered obvious by the cited references or that the references are not properly combinable will not be acceptable. The Office cannot infer or guess what petitioner believes the differences between the claims and the teachings of the prior art to be. Petitioner's statements must also be consistent and must be related to the claim language. In the instant petition, petitioner has not distinguished each claim from each piece of prior art cited.
A statement that the dependent claims are allowable because the independent claims are patentable is not sufficient. This does not provide guidance to the examiner as to whether the limitations could provide patentability should the examiner find the independent claims unpatentable.

Regarding the requirements of section II element 6.4 outlined above, the petition fails to identify a concise statement of the utility of the invention as defined in each of the independent claims. A general statement directed to the overall concept of the invention is not specifically relating the utility to each of the independent claims as is required by the policy. Petitioner should reference the independent claims specifically when discussing the utility of the invention.

Regarding the requirements of section II element 6.5 outlined above, the requirements of this section are not met. A grantable petition requires petitioner to provide a showing of where each limitation of the claims finds support under 35 U.S.C. 112, first paragraph, in the written description of the specification. If applicable, the showing must also identify: (1) each means- (or step) plus-function claim element that invokes consideration under 35 U.S.C. 112, sixth paragraph; and (2) the structure, material, or acts in the specification that corresponds to each means- (or step) plus-function claim element that invokes consideration under 35 U.S.C. 112, sixth paragraph; if the application claims the benefit of one or more applications under title 35, United States Code, the showing must also include where each limitation of the claims finds support under 35 U.S.C. 112, first paragraph, in each such application in which such supports exists. In the instant petition, the 35 U.S.C. 112 first paragraph support is not shown by claim limitations. Support was not provided for applications 12/969125 and 12/887916 for which priority is claimed.

Finally, regarding the requirements of section II element 6.6, the petition does not provide an identification of any cited references that may be disqualified under 35 U.S.C. 103(c). If there are no such references, a statement to such must be made.

## DECISION

For the above-stated reasons, the petition is **dismissed**. The application will therefore be taken up by the examiner for action in its regular turn.

Petitioner is given a single opportunity to perfect the petition. Any request for reconsideration of this decision must be submitted within 1 (one) month or 30 (thirty) days, whichever is longer,

(no extension of time under 37 CFR 1.136(a)) from the date of this decision in order to be considered timely. Any request for reconsideration must address all of the deficiencies indicated above.

Petitioner is reminded that, upon granting of the special status of the application on request for reconsideration, the application will be processed expeditiously. However, due to the dismissal of the instant petition, examination may not be completed within twelve months of the filing date of the application.

Any inquiry regarding this decision should be directed to Linda J. Sholl, TC 3700 Special Programs Examiner, at (571) 272-4391.

/Linda J. Sholl/
Linda J. Sholl
Special Programs Examiner
Technology Center 3700

**IN THE UNITED STATES PATENT AND TRADEMARK OFFICE**

| | |
|---|---|
| **First Named Inventor: Joerg WANINK** | ) |
| **Confirmation No.: 9656** | ) |
| | ) |
| **Serial No.: 13/013,933** | ) |
| | ) |
| **Filing Date: 01-26-2011** | ) |
| | ) |
| **Atty Docket No.: 248174-1** | ) |

Commissioner for Patents
P.O. Box 1450
Alexandria, VA 22313-1450

**Statement Concerning the Basis for the Special Status**

SIR:

Applicant respectfully submits that Special Status is sought on the basis that the present invention materially contributes to the development of renewable energy resources or energy conservation.

The undersigned attorney may be contacted at the number below to facilitate the resolution of any matters. Please charge any fees that are incurred in connection with this Statement to deposit account no. 09-0470.

Respectfully submitted,

General Electric Company

By : /Allison W Mages/
Allison Weiner Mages
Reg. No. 57,275

Dated: May 23, 2011

GE Global Patent Operation
2 Corporate Drive, Suite 648
Shelton, CT 06484
203-944-6755

Doc Code: PET.GREEN
Document Description: Petition for Green Tech Pilot

PTO/SB/420 (03-11)

# PETITION TO MAKE SPECIAL UNDER THE GREEN TECHNOLOGY PILOT PROGRAM

| Attorney Docket Number: 248174-1 | Application Number (if known): 13/013,933 | Filing date: 01-26-2011 |
|---|---|---|

First Named Inventor: Joerg WANINK

Title: SYSTEM AND METHOD FOR COLLECTING PARTICLES IN A WIND TURBINE ROTOR BLADE

**APPLICANT HEREBY REQUESTS TO PARTICIPATE IN THE GREEN TECHNOLOGY PILOT PROGRAM FOR THE ABOVE-IDENTIFIED APPLICATION. See Instruction Sheet on page 2.**

This petition must be timely filed electronically using the USPTO electronic filing system, EFS-Web.

1. By filing this petition:

   **Applicant is requesting early publication: Applicant hereby requests early publication under 37 CFR 1.219 and the publication fee set forth in 37 CFR 1.18(d) accompanies this request.**

2. By filing this petition: applicant is agreeing to make an election without traverse in a telephonic interview and elect an invention that meets the eligibility requirements for the Green Technology Pilot Program, if the Office determines that the claims are not obviously directed to a single invention. See Instruction Sheet.

3. This request is accompanied by statements of special status for the eligibility requirement.

4. The application contains no more than three (3) independent claims and twenty (20) total claims.

5. The application does not contain any multiple dependent claims.

6. Other attachments: Statement Concerning the Basis for the Special Status

| Signature /Allison W. Mages/ | Date May 23, 2011 |
|---|---|
| Name (Print/Typed) Allison W. Mages | Registration Number 57,275 |

*Note: Signatures of all the inventors or assignees of record of the entire interest or their representative(s) are required in accordance with 37 CFR 1.33 and 11.18. Please see 37 CFR 1.4(d) for the form of the signature. If necessary, submit multiple forms for more than one signature, see below*.*

☐ *Total of _____ forms are submitted.

*If you need assistance in completing the form, call 1-800-PTO-9199 and select option 2.*

# Privacy Act Statement

The **Privacy Act of 1974 (P.L. 93-579)** requires that you be given certain information in connection with your submission of the attached form related to a patent application or patent. Accordingly, pursuant to the requirements of the Act, please be advised that: (1) the general authority for the collection of this information is 35 U.S.C. 2(b)(2); (2) furnishing of the information solicited is voluntary; and (3) the principal purpose for which the information is used by the U.S. Patent and Trademark Office is to process and/or examine your submission related to a patent application or patent. If you do not furnish the requested information, the U.S. Patent and Trademark Office may not be able to process and/or examine your submission, which may result in termination of proceedings or abandonment of the application or expiration of the patent.

The information provided by you in this form will be subject to the following routine uses:

1. The information on this form will be treated confidentially to the extent allowed under the Freedom of Information Act (5 U.S.C. 552) and the Privacy Act (5 U.S.C 552a). Records from this system of records may be disclosed to the Department of Justice to determine whether disclosure of these records is required by the Freedom of Information Act.
2. A record from this system of records may be disclosed, as a routine use, in the course of presenting evidence to a court, magistrate, or administrative tribunal, including disclosures to opposing counsel in the course of settlement negotiations.
3. A record in this system of records may be disclosed, as a routine use, to a Member of Congress submitting a request involving an individual, to whom the record pertains, when the individual has requested assistance from the Member with respect to the subject matter of the record.
4. A record in this system of records may be disclosed, as a routine use, to a contractor of the Agency having need for the information in order to perform a contract. Recipients of information shall be required to comply with the requirements of the Privacy Act of 1974, as amended, pursuant to 5 U.S.C. 552a(m).
5. A record related to an International Application filed under the Patent Cooperation Treaty in this system of records may be disclosed, as a routine use, to the International Bureau of the World Intellectual Property Organization, pursuant to the Patent Cooperation Treaty.
6. A record in this system of records may be disclosed, as a routine use, to another federal agency for purposes of National Security review (35 U.S.C. 181) and for review pursuant to the Atomic Energy Act (42 U.S.C. 218(c)).
7. A record from this system of records may be disclosed, as a routine use, to the Administrator, General Services, or his/her designee, during an inspection of records conducted by GSA as part of that agency's responsibility to recommend improvements in records management practices and programs, under authority of 44 U.S.C. 2904 and 2906. Such disclosure shall be made in accordance with the GSA regulations governing inspection of records for this purpose, and any other relevant (*i.e.*, GSA or Commerce) directive. Such disclosure shall not be used to make determinations about individuals.
8. A record from this system of records may be disclosed, as a routine use, to the public after either publication of the application pursuant to 35 U.S.C. 122(b) or issuance of a patent pursuant to 35 U.S.C. 151. Further, a record may be disclosed, subject to the limitations of 37 CFR 1.14, as a routine use, to the public if the record was filed in an application which became abandoned or in which the proceedings were terminated and which application is referenced by either a published application, an application open to public inspection or an issued patent.
9. A record from this system of records may be disclosed, as a routine use, to a Federal, State, or local law enforcement agency, if the USPTO becomes aware of a violation or potential violation of law or regulation.

UNITED STATES PATENT AND TRADEMARK OFFICE

UNITED STATES DEPARTMENT OF COMMERCE
United States Patent and Trademark Office
Address: COMMISSIONER FOR PATENTS
P.O. Box 1450
Alexandria, Virginia 22313-1450
www.uspto.gov

| APPLICATION NO. | FILING DATE | FIRST NAMED INVENTOR | ATTORNEY DOCKET NO. | CONFIRMATION NO. |
|---|---|---|---|---|
| 13/013,933 | 01/26/2011 | Joerg WANINK | 248174-1 | 9656 |

52082 7590 06/22/2011

General Electric Company
GE Global Patent Operation
2 Corporate Drive, Suite 648
Shelton, CT 06484

| EXAMINER | |
|---|---|
| ART UNIT | PAPER NUMBER |
| 3745 | |

| NOTIFICATION DATE | DELIVERY MODE |
|---|---|
| 06/22/2011 | ELECTRONIC |

**Please find below and/or attached an Office communication concerning this application or proceeding.**

The time period for reply, if any, is set in the attached communication.

Notice of the Office communication was sent electronically on above-indicated "Notification Date" to the following e-mail address(es):

gpo.mail@ge.com
allyson.camaroli@ge.com

UNITED STATES PATENT AND TRADEMARK OFFICE

Commissioner for Patents
United States Patent and Trademark Office
P.O. Box 1450
Alexandria, VA 22313-1450
www.uspto.gov

General Electric Company
GE Global Patent Operation
2 Corporate Drive, Suite 648
Shelton CT 06484

In re Application of
WANINK, JOERG ET AL.
Application No. 13/013,933
Filed: Jan. 26, 2011
Attorney Docket No. 248174-1

: DECISION ON PETITION
: TO MAKE SPECIAL UNDER
: THE GREEN TECHNOLOGY
: PILOT PROGRAM

This is a decision on the petition under 37 CFR 1.102, filed May 24, 2011, to make the above-identified application special under the pilot program for applications pertaining to Green Technologies as set forth in 74 Federal Register Notice 64666 (December 8, 2009) and amended by 75 Federal Register Notice 28554 (May 21, 2010) and 75 Federal Register Notice 69049 (November 10, 2010).

The petition is **DISMISSED**.

A grantable petition to make an application special under 37 CFR 1.102 and the pilot program as set forth in 74 FR 64666 must be directed to a nonprovisional application filed under 35 USC 111(a) or be a national stage entry under 35 USC 371, exclusive of any reissue applications.

If reconsideration of this decision is desired, a petition for reconsideration must be filed within ONE (1) MONTH OR THIRTY (30) DAYS from the mail date of this decision, whichever is longer. No extension of this time limit can be granted under 37 CFR 1.136(a) or (b). The petition for reconsideration should include an exhaustive attempt to provide the lacking item(s) noted below, since, after a decision on the petition for reconsideration, no further reconsideration or review of the matter will be undertaken by the Director.

In order to qualify for special status, the following requirements must be met. 1) The application must have no more than 3 independent claims and no more than 20 total claims. 2) The application must not contain any multiple dependent claims. 3) The petition must state the basis for seeking special status, i.e., the claimed invention either: A) materially enhances the quality of the environment or B) materially contributes to: i) the discovery or development of renewable energy resources, ii) the more efficient utilization and conservation of energy resources, or iii) greenhouse gas emission reduction. 4) If the disclosure is not clear on its face that the claimed invention materially contributes under category (A) or (B), the petition must be accompanied by a statement by the applicant, assignee, or an attorney/agent registered to practice before the

Office explaining how the materiality standard is met. 5) A statement that applicant will agree to make an election without traverse in a telephonic interview if a restriction requirement is made by the examiner. 6) The petition to make special must be filed electronically. 7) The petition must be filed at least one day prior to the date that a first Office Action appears in the Patent Application Information Retrieval (PAIR) system. 8) The petition must be accompanied by a request for early publication in compliance with 37 CFR 1.219 and include the publication fee as set forth in 37 CFR 1.18(d).

The requirement for a fee for consideration of the petition to make special for applications pertaining to Green Technologies has been waived.

The petition lacks item(s) 4. The particle collection apparatus does not satisfy items 3(A) or 3(B) above, and because materiality is not met, this petition must be dismissed for failure to contain an accompanying statement explaining how materiality is met.

Telephone inquires concerning this decision should be directed to Henry C. Yuen at 571-272-4856.

This application will be forwarded to the Technology Center Art Unit 3745 for action on the merits commensurate with this decision.

/Henry C. Yuen/

Henry C. Yuen
Quality Assurance Specialist
Technology Center TC 3700

**IN THE UNITED STATES PATENT AND TRADEMARK OFFICE**

| | |
|---|---|
| **First Named Inventor: 13/013,933** | ) |
| **Confirmation No.: 9656** | ) |
| | ) |
| **Serial No.: 13/013,933** | ) |
| | ) |
| **Filing Date: 01-26-2011** | ) |
| | ) |
| **Atty Docket No.: 248174-1** | ) |

Commissioner for Patents
P.O. Box 1450
Alexandria, VA 22313-1450

**Request for Reconsideration**

SIR:

This is responsive to the Decision on Petition, dated as mailed 22 June 2011, in the above-referenced application.

Applicant respectfully requests reconsideration of Applicant's Petition to Make Special on the basis that the present invention materially contributes to the development of renewable energy resources or energy conservation.

The Decision to Make Special Under the Green Technology Pilot Program (hereinafter "the Decision") alleges that the particle collection apparatus does not satisfy items 3(A) or 3(B), i.e., that the claimed invention either: A) materially enhances the quality of the environment or B) materially contributes to: i) the discovery or development of renewable energy resources, ii) the more efficient utilization and conservation of energy resources, or iii) greenhouse gas emission reduction, because materiality is not met. Applicant does not agree with the comments made in the Decision.

Applicant respectfully submits that embodiments of the present invention relate generally to methods and systems for the maintenance of wind turbines, and more particularly, to methods and systems for avoiding sounds from loose particles moving around freely in the interior of wind turbine rotor blades. (see at least paragraph [0001]).

Wind power is considered one of the cleanest, most environmentally friendly energy sources presently available, and wind turbines have gained increased attention in this regard. While wind power is considered one of the cleanest, most environmentally friendly energy sources presently available, the availability of wind energy as a viable power generating option heavily depends on the cost/benefit economics of wind energy. As such, it is important that the cost of producing the energy, including maintenance and repair of the wind turbine components, cannot outweigh the benefits.

Wind turbine rotor blades are generally hollow, their bodies include laminates including glass fibre and resin. Typically, two halves are laminated together during the manufacturing process of a rotor blade. After the rotor blade is produced by joining the two halves, on the inside of the blade some fibers of the laminate may stick out of the inner surface or the like. During subsequent operation of the wind turbine, as the blade is subject to changing loads resulting in slight deformation of its body, fibers and particles may become loose. As a result, after some time a number of loose particles may build up in the interior of the blade. These particles have typical sizes from about 0.2 cm to 4 cm. (see at least paragraph [0003]).

This is undesirable, as they move around during operation of the turbine, or even during idle operation of the turbine, when the blades are in a feathered position. This may lead to damage if, e.g., bigger pieces hit a sensor inside the rotor blade. A further disadvantage is that once a certain number of particles are moving inside the blade, the sound of the particles sliding along the interior of the blade is audible outside the turbine as a kind of noise. Though this is only audible during idle or standtstill of the turbine, as during operation there are many louder sound sources, it is still not desirable. For instance, persons not informed about the cause of the sound may tend to think that there is a malfunction in the turbine. In view of this, it is desirable to have a method and system for avoiding the sounds caused by loose particles inside rotor blades. (see at least paragraphs [0004] and [0005]).

The embodiments described herein include a particle trap, a wind turbine system and a method that enable the collection of loose particles inside a rotor blade. (see at least paragraph [0020]). The systems and methods disclosed facilitate to collect freely moving particles from the inside of wind turbine rotor blades. More specifically, they prevent freely moving particles from causing noise and/or damage. (see at least paragraph [0050]).

Embodiments of the present invention materially contribute to the development of renewable energy by providing methods and systems for avoiding sounds and damage from loose particles moving around freely in the interior of wind turbine rotor blades. These measures aid in reducing the likelihood that the wind turbine is damaged by loose particles and eliminates a

need to interrupt the operation of the wind turbine for maintenance or repair. This in turn promotes increased energy production.

The undersigned attorney may be contacted at the number below to facilitate the resolution of any matters. Please charge any fees that are incurred in connection with this Statement to deposit account no. 09-0470.

Respectfully submitted,

General Electric Company

By : /Allison W Mages/
Allison Weiner Mages
Reg. No. 57,275

Dated: July 22, 2011

GE Global Patent Operation
2 Corporate Drive, Suite 648
Shelton, CT 06484
203-944-6730

UNITED STATES PATENT AND TRADEMARK OFFICE

UNITED STATES DEPARTMENT OF COMMERCE
United States Patent and Trademark Office
Address: COMMISSIONER FOR PATENTS
P.O. Box 1450
Alexandria, Virginia 22313-1450
www.uspto.gov

| APPLICATION NO. | FILING DATE | FIRST NAMED INVENTOR | ATTORNEY DOCKET NO. | CONFIRMATION NO. |
|---|---|---|---|---|
| 13/013,933 | 01/26/2011 | Joerg WANINK | 248174-1 | 9656 |

52082 7590 08/18/2011

General Electric Company
GE Global Patent Operation
2 Corporate Drive, Suite 648
Shelton, CT 06484

| EXAMINER | |
|---|---|
| ART UNIT | PAPER NUMBER |
| 3745 | |

| NOTIFICATION DATE | DELIVERY MODE |
|---|---|
| 08/18/2011 | ELECTRONIC |

**Please find below and/or attached an Office communication concerning this application or proceeding.**

The time period for reply, if any, is set in the attached communication.

Notice of the Office communication was sent electronically on above-indicated "Notification Date" to the following e-mail address(es):

gpo.mail@ge.com
allyson.carnaroli@ge.com

UNITED STATES PATENT AND TRADEMARK OFFICE

Commissioner for Patents
United States Patent and Trademark Office
P.O. Box 1450
Alexandria, VA 22313-1450
www.uspto.gov

General Electric Company
GE Global Patent Operation
2 Corporate Drive, Suite 648
Shelton CT 06484

AUG 18 2011

In re Application of :
Joerg Wanink et al. : DECISION ON PETITION
Application No. 13/013,933 : TO MAKE SPECIAL UNDER
Filed: January 26, 2011 : THE GREEN TECHNOLOGY
Attorney Docket No. 248174-1 : PILOT PROGRAM

This is a decision on the petition under 37 CFR 1.102, filed July 22, 2011, to make the above-identified application special under the pilot program for applications pertaining to Green Technologies as set forth in 74 Federal Register Notice 64666 (December 8, 2009) and amended by 75 Federal Register Notice 28554 (May 21, 2010) and 75 Federal Register Notice 69049 (November 10, 2010).

The petition is **GRANTED**.

A grantable petition to make an application special under 37 CFR 1.102 and the pilot program as set forth in 74 FR 64666 must be directed to a nonprovisional application filed under 35 USC 111(a) or be a national stage entry under 35 USC 371, exclusive of any reissue applications.

In order to qualify for special status, the following requirements must be met. 1) The application must have no more than 3 independent claims and no more than 20 total claims. 2) The application must not contain any multiple dependent claims. 3) The petition must state the basis for seeking special status, i.e., the claimed invention either: A) materially enhances the quality of the environment or B) materially contributes to: i) the discovery or development of renewable energy resources, ii) the more efficient utilization and conservation of energy resources, or iii) greenhouse gas emission reduction. 4) If the disclosure is not clear on its face that the claimed invention materially contributes under category (A) or (B), the petition must be accompanied by a statement by the applicant, assignee, or an attorney/agent registered to practice before the Office explaining how the materiality standard is met. 5) A statement that applicant will agree to make an election without traverse in a telephonic interview if a restriction requirement is made by the examiner. 6) The petition to make special must be filed electronically. 7) The petition must be filed at least one day prior to the date that a first Office Action appears in the Patent Application Information Retrieval (PAIR) system. 8) The petition must be accompanied by a request for early publication in compliance with 37 CFR 1.219 and include the publication fee as set forth in 37 CFR 1.18(d).

The requirement for a fee for consideration of the petition to make special for applications pertaining to Green Technologies has been waived.

The instant petition complies with items 1 – 8 above. Accordingly, the above-identified application has been accorded "special" status.

Telephone inquires concerning this decision should be directed to Blaine Copenheaver at 571-272-1156.

The application is being forwarded to the examiner for action on the merits commensurate with this decision.

/Blaine Copenheaver/

Blaine Copenheaver
Quality Assurance Specialist
Technology Center 1700

UNITED STATES PATENT AND TRADEMARK OFFICE

Commissioner for Patents
United States Patent and Trademark Office
P.O. Box 1450
Alexandria, VA 22313-1450
www.uspto.gov

In re Application of
John J. Islas

Application No. 13013944

Filed: January 26,2011

Attorney Docket No. 550.009PA

:
:
:DECISION ON PETITION TO MAKE SPECIAL
:UNDER 37 CFR 1.102(c)(1)
:

This is a decision on the electronic petition under 37 CFR 1.102 (c)(1), filed 26-FEB-2011 to make the above-identified application special based on applicant's age as set forth in MPEP § 708.02, Section IV.

The petition is **GRANTED**.

A grantable petition to make an application special under 37 CFR 1.102(c)(1), MPEP § 708.02, Section IV: Applicant's Age must include a statement by applicant or a registered practitioner having evidence that applicant is at least 65 years of age. No fee is required.

Accordingly, the above-identified application has been accorded "special" status and will be taken up for action by the examiner upon the completion of all pre-examination processing.

Telephone inquiries concerning this electronic decision should be directed to the Electronic Business Center at 866-217-9197.

All other inquiries concerning either the examination or status of the application should be directed to the Technology Center.

UNITED STATES PATENT AND TRADEMARK OFFICE

Commissioner for Patents
United States Patent and Trademark Office
P.O. Box 1450
Alexandria, VA 22313-1450
www.uspto.gov

BERNHARD P MOLLDREM JR
224 HARRISON STREET
SUITE 200
SYRACUSE NY 13202

MAILED

DEC 16 2011

OFFICE OF PETITIONS

In re Application of :
John J. Islas :
Application No. 13/013,944 : ON PETITION
Filed: January 26, 2011 :
Attorney Docket No. 550.009PA :

This is a decision on the petition to revive under 37 CFR 1.137(a), filed December 9, 2011, which is being treated as a petition to withdraw the holding of abandonment under 37 CFR 1.181 in view of petitioner's request that the abandonment be withdrawn and the petition fee refunded.

The petition under 37 CFR 1.181 is **GRANTED**.

The holding of abandonment is **WITHDRAWN**.

This application became abandoned by operation of law for failure to timely file a reply to the Notice to File Corrected Application Papers mailed February 9, 2011. This Notice set an extendable period for reply of two (2) months for applicant to submit replacement drawings. No replacement drawings having been received, the application became abandoned on April 10, 2011. The Office mailed a Notice of Abandonment on October 24, 2011.

Petitioner contends that he did not receive the February 9, 2011 Notice to File Corrected Application Papers.

A review of the application file reveals that the Notice to File Corrected Application Papers was returned to the Office as undeliverable. The Notice was address to the address set forth in the declaration and power of attorney submitted on filing - 333 East Onondaga Street, Syracuse NY 13202. However, a review

of the application papers submitted on filing reveals the presence of an application transmittal letter bearing an address of 224 Harrison Street, Syracuse NY 23202.

MPEP 403 states:

> 37 CFR 1.33(a) provides that in a patent application the applicant must specify a correspondence address to which the Office will send notices, letters and other communications relating to the application. The correspondence address must appear either in an application data sheet (37 CFR 1.76) or in a clearly identifiable manner elsewhere in any papers submitted with an application filing. **Where more than one correspondence address is specified, the Office will select one of the correspondence addresses** for use as the correspondence address. This is intended to cover, for example, the situation where an application is submitted with multiple addresses, such as one correspondence address being given in the application transmittal letter, and a different one in an accompanying 37 CFR 1.63 oath or declaration, or other similar situations. **The Office will select which of the multiple correspondence addresses to use according to the following order: (A) application data sheet (ADS); (B) application transmittal; (C) oath or declaration (unless power of attorney is more current); and (D) power of attorney.**

As such, the Office should have mailed the Notice to the correspondence address set forth on the application transmittal letter instead of the correspondence address set forth in the declaration.

Given the basis for granting this petition, the $310 petition fee has been refunded

The application is being forwarded to the Office of Patent Application Processing for pre-examination processing using the replacement drawings filed December 9, 2011.

Telephone inquiries regarding this decision should be directed to the undersigned at (571)272-3207.

Cliff Congo
Petitions Attorney
Office of Petitions

UNITED STATES PATENT AND TRADEMARK OFFICE

Commissioner for Patents
United States Patent and Trademark Office
P.O. Box 1450
Alexandria, VA 22313-1450
www.uspto.gov

**ELI LILLY & COMPANY**
**PATENT DIVISION**
**P.O. BOX 6288**
**INDIANAPOLIS, IN 46206-6288**

**MAILED**

**OCT 24 2011**

**OFFICE OF PETITIONS**

In re Application of :
**FLYNN,** Daniel L. et al. :
Application No. 13/014,020 : DECISION ON PETITION
Filed: January 26, 2011 : TO WITHDRAW
Attorney Docket No. **X18452A_US** : FROM RECORD
:

This is a decision on the Request to Withdraw as attorney or agent of record under 37 C.F.R. § 1.36(b), filed October 05, 2011.

The request is **APPROVED**.

A grantable request to withdraw as attorney/agent of record must be signed by every attorney/agent seeking to withdraw or contain a clear indication that one attorney is signing on behalf of another/others. The Office requires the practitioner(s) requesting withdrawal to certify that he, she, or they have: (1) given reasonable notice to the client, prior to the expiration of the response period, that the practitioner(s) intends to withdraw from employment; (2) delivered to the client or a duly authorized representative of the client all papers and property (including funds) to which the client is entitled; and (3) notified the client of any responses that may be due and the time frame within which the client must respond, pursuant 37 CFR 10.40(c).

The request was signed by Elizabeth A. McGraw on behalf of all attorneys of record who are associated with customer No. 25885. All attorneys/agents associated have been withdrawn. Applicant is reminded that there is no attorney of record at this time.

All future correspondence will be directed to the first named inventor Daniel L. Flynn at the address indicated below.

There is an outstanding Office action mailed August 05, 2011 that requires a reply from the applicant.

Telephone inquiries concerning this decision should be directed to the undersigned at 571-272-4231.

Michelle R. Eason
Paralegal Specialist
Office of Petitions

cc: **DECIPHERA LLC**
**C/O DANIEL L. FLYNN, CEO**
**643 MASSACHUSETTS, SUITE 200**
**LAWRENCE, KS 66044**

UNITED STATES PATENT AND TRADEMARK OFFICE

UNITED STATES DEPARTMENT OF COMMERCE
United States Patent and Trademark Office
Address: COMMISSIONER FOR PATENTS
P.O. Box 1450
Alexandria, Virginia 22313-1450
www.uspto.gov

| APPLICATION NO. | FILING DATE | FIRST NAMED INVENTOR | ATTORNEY DOCKET NO. | CONFIRMATION NO. |
|---|---|---|---|---|
| 13/014,080 | 01/26/2011 | Hwan Hee JEONG | HI-0619 | 9926 |

34610 7590 03/01/2011

KED & ASSOCIATES, LLP
P.O. Box 8638
Reston, VA 20195

| EXAMINER | |
|---|---|
| ART UNIT | PAPER NUMBER |
| 2811 | |

| MAIL DATE | DELIVERY MODE |
|---|---|
| 03/01/2011 | PAPER |

**Please find below and/or attached an Office communication concerning this application or proceeding.**

The time period for reply, if any, is set in the attached communication.

UNITED STATES PATENT AND TRADEMARK OFFICE

Commissioner for Patents
United States Patent and Trademark Office
P.O. Box 1450
Alexandria, VA 22313-1450
www.uspto.gov

**KED & ASSOCIATES, LLP**
**P.O. Box 8638**
**Reston VA 20195**

**In re Application of**
**Hwan Hee JEONG**
**Application No.: 13/014,080**
**Filed: 26 January 2011**
**Attorney Docket No.: HI-0619**
**For: LIGHT EMITTING DEVICE**

**: DECISION ON REQUEST TO**
**: PARTICIPATE IN THE PATENT**
**: PROSECUTION HIGHWAY**
**: PROGRAM AND PETITION**
**: TO MAKE SPECIAL UNDER**
**: 37 CFR 1.102(a)**

This is a decision on the request to participate in the Patent Prosecution Highway (PPH) program and the petition under 37 CFR 1.102(a), filed 26 January 2011, to make the above-identified application special.

The request and petition are **GRANTED**.

**Discussion**

A grantable request to participate in the PPH program and petition to make special require:

1. The U.S. application is

    a. a Paris Convention application which either
        i. validly claims priority under 35 U.S.C. 119(a) and 37 CFR 1.55 to one or more applications filed in the KIPO, or
        ii. validly claims priority under 35 U.S.C. 119(a)/365(a) to a PCT application that contains no priority claims,

    or

    b. a national stage application under the PCT (an application which entered the national stage in the U.S. from a PCT international application after compliance with 35 U.S.C. 371), which PCT application
        i. validly claims priority under 35 U.S.C. 365(b) to an application filed in the KIPO, or
        ii. validly claims priority under 35 U.S.C. 365(b) to a PCT application that contains no priority claims, or
        iii. contains no priority claim,

    or

    c. a so-called bypass application filed under 35 U.S.C. 111(a) which validly claims benefit under 35 U.S.C. 120 to a PCT application, which PCT application
        i. validly claims priority under 35 U.S.C. 365(b) to an application filed in the KIPO, or

ii. validly claims priority under 35 U.S.C. 365(b) to a PCT application that contains no priority claims, or
iii. contains no priority claim;

2. Applicant must submit a copy of:
   a. The allowable/patentable claim(s) from the KR application(s);
   b. An English translation of the allowable/patentable claim(s), and
   c. A statement that the English translation is accurate (if the claims were published in a language other than English);
3. Applicant must:
   a. Ensure that all the claims in the U.S. application must sufficiently correspond or be amended to sufficiently correspond to the allowable/patentable claim(s) in the KR application(s), and
   b. Submit a claims correspondence table in English;
4. Examination of the U.S. application has not begun;
5. Applicant must submit:
   a. A copy of all the office actions (which are relevant to patentability), excluding "Decision to Grant a Patent" from each of the KR application(s) containing the allowable/patentable claim(s);
   b. An English language translation of the KIPO office action; and
   c. A statement that the English translation is accurate (if the office actions are not in the English language);
6. Applicant must submit:
   a. An IDS listing the documents cited by the KIPO examiner in the KIPO office action (unless already filed in this application); and
   b. Copies of all the documents cited in the KIPO office action, except U.S. patents or U.S. patent application publications (unless already filed in this application);

The request to participate in the PPH program and petition comply with the above requirements. Accordingly, the above-identified application has been accorded "special" status.

Any response must be submitted via EFS-Web.

Telephone inquiries concerning this decision should be directed to Lee W. Young at 571-272-4549.

All other inquiries concerning the examination or status of the application is accessible in the PAIR system at http://uspto.gov/ebc/index.html.

Lee W. Young
TQAS
Technology Center 2800

UNITED STATES PATENT AND TRADEMARK OFFICE

UNITED STATES DEPARTMENT OF COMMERCE
United States Patent and Trademark Office
Address: COMMISSIONER FOR PATENTS
P.O. Box 1450
Alexandria, Virginia 22313-1450
www.uspto.gov

| APPLICATION NO. | FILING DATE | FIRST NAMED INVENTOR | ATTORNEY DOCKET NO. | CONFIRMATION NO. |
|---|---|---|---|---|
| 13/014,109 | 01/26/2011 | Shinichi Akiyama | SHIN 24.619 | 9977 |

26304 7590 10/11/2011
KATTEN MUCHIN ROSENMAN LLP
575 MADISON AVENUE
NEW YORK, NY 10022-2585

| EXAMINER | |
|---|---|
| STONER, KILEY SHAWN | |
| ART UNIT | PAPER NUMBER |
| 1735 | |

| NOTIFICATION DATE | DELIVERY MODE |
|---|---|
| 10/11/2011 | ELECTRONIC |

**Please find below and/or attached an Office communication concerning this application or proceeding.**

The time period for reply, if any, is set in the attached communication.

Notice of the Office communication was sent electronically on above-indicated "Notification Date" to the following e-mail address(es):

nycuspto@kattenlaw.com
brendy.belony@kattenlaw.com
samson.helfgott@kattenlaw.com

UNITED STATES PATENT AND TRADEMARK OFFICE

Commissioner for Patents
United States Patent and Trademark Office
P.O. Box 1450
Alexandria, VA 22313-1450
www.uspto.gov

OCT 1 1 2011

CST

| | | |
|---|---|---|
| In re application of<br>Shinichi Akiyama et al<br>Serial No. 13/014,109<br>Filed: January 26, 2011<br>For: METHOD OF MANUFACTURING SEMICONDUCTOR DEVICE AND WIRE BONDING APPARATUS | :<br>:<br>:<br>:<br>:<br>:<br>: | DECISION ON REQUEST TO PARTICIPATE IN PATENT PROSECUTION HIGHWAY PROGRAM AND PETITION TO MAKE SPECIAL UNDER 37 CFR 1.102(a) |

This is a decision on the request to participate in the Patent Prosecution Highway (PPH) program filed July 27, 2011.

The request and petition are **GRANTED**.

A grantable request to participate in the PPH program and petition to make special require:

(1) The U.S. application must validly claim priority under 35 U.S.C. 119(a) to one or more applications filed in the JPO, note where the JPO application with similar claims is not the same application from which the U.S. application claims priority that the applicant must identify the relationship between the JPO application with similar claims and the JPO priority application;

(2) Applicant must submit a copy of:

a. The allowable/patentable claim(s) from the JPO application(s) or if a copy of the allowable/patentable claims is available via the Dossier Access System (DAS) applicant may request the USPTO to obtain a copy from DAS; however, if the USPTO is unable to obtain a copy from the DAS, the applicant will be required to submit a copy;
b. An English translation of the allowable/ patentable claim(s), if applicable; and
c. A statement that the English translation is accurate, if applicable;

(3) Applicant must:

a. Ensure all the claims in the U.S. application must sufficiently correspond or be amended to sufficiently correspond to the allowable/patentable claim(s) in the JPO application(s); and
b. Submit a claims correspondence table in English;

(4) Examination of the U.S. application has not begun;

(5) Applicant must submit:

a. Documentation of prior office action:
   i. a copy of the office action(s) just prior to the "Decision to Grant a Patent" from each of the JPO application(s) containing the allowable/patentable claims(s) or
   ii. if the allowable/patentable claim(s) are from "Notification of Reasons for Refusal" then the Notification of Reasons for Refusal or
   iii. if the JPO application is a first action allowance then no office action from the JPO is necessary should be indicated on the request/petition form:
   Further, if a copy of the documents from a or b is available via the Dossier Access System (DAS), applicant may request the USPO obtain a copy from the DAS; however, if the USPTO is unable to obtain a copy of the DAS, the applicant will be required to submit a copy;
b. An English language translation of the JPO Office action from (5)(a)(i)-(ii) above if applicable; and
c. A statement that the English translation is accurate; and

(6) Applicant must submit:

a. An IDS listing the documents cited by the JPO examiner in the JPO office action (unless already submitted in this application)
b. Copies of documents except U.S. patents or U.S. patent application publications (unless already submitted in this application).

The request to participate in the PPH program and petition comply with the above requirements. Accordingly, the above-identified application has been accorded "special" status.

The application is being forwarded to the examiner for action on the merits commensurate with this decision.

Any inquiry regarding this decision should be directed to Christine Tierney, Quality Assurance Specialist, at (571) 272-1055.

All other inquiries concerning the examination or status of the application is accessible in the PAIR system at http://www.uspto.gov/ebc/index.html.

/Christine Tierney/

Christine Tierney
Quality Assurance Specialist
Technology Center 1700

**IN THE UNITED STATES PATENT AND TRADEMARK OFFICE**

| | |
|---|---|
| **First Named Inventor: John K. BESORE** | ) |
| **Confirmation No.: 1055** | ) |
| | ) |
| **Serial No.: 13/014,153** | ) |
| | ) |
| **Filing Date: 01-26-2011** | ) |
| | ) |
| **Atty Docket No.: 246228-1 (GECZ 201148US01)** | ) |

VIA EFS
Commissioner for Patents
P.O. Box 1450
Alexandria, VA 22313-1450

**Statement Concerning the Basis for the Special Status**

SIR:

The present application generally relates to energy management, and more particularly to energy management or demand supply management (DSM) of household consumer devices. The application is particularly useful for modifying or incorporating energy savings features and functions via a smart load switch that includes a built-in circuit that responds to incoming demand response signals from utilities to shed load and reduce operating costs for the homeowner. The concept will also find application with regard to various home devices such as window air conditioners, pool heaters, dehumidifiers, space heaters, water chillers, etc. (See [0001])

Through use of smart systems, utilities are able to invoke demand response events that can, for example, adjust a thermostat set point based upon the ordering of a demand response event or based upon a specific tier price being announced. Such thermostat systems are typically used to control central

heating, ventilation and air conditioning (HVAC) systems. Window air conditioner variants are currently being developed with integral smart systems that respond to similar aforementioned signals. Likewise, many companies are offering load switches that turn generic devices on or off (for example, those devices operating at 115 volts or 240 volts) based upon an incoming signal such as a demand response or a time of use schedule. (See [0003])

A need exists for a smart load switch or smart plug for a more sophisticated arrangement that can monitor specific control variables, for example room conditions, store data (for example, relating to set point conditions), receive input data from the measuring transducer, compare the data to the data stored in the memory and then selectively control power to a remote plug-in device. (See [0004])

In one embodiment of the present application, a load switch or smart plug is configured to monitor a physical variable, such as room temperature, in comparison to control the on and off condition of the plug. In a preferred arrangement, the smart load switch includes a measuring device for monitoring a room condition, a memory for storing data relating to set point conditions, and a controller that receives input data from the measuring device, compares the input data to the set point data stored in memory, and selectively controls the on and off condition of a plug that receives an associated remote plug-in device. (See [0005]-[0006])

A method of controlling a plug-in device is also provided, which includes measuring a physical condition, storing data in a memory relating to set point

conditions, receiving input data from the measuring transducer, comparing the measured data to the set point data stored in memory, and selectively controlling an on/off condition in response thereto of a switch that receives an associated remote plug-in device. (See [0015])

A primary benefit of the present application is the ability to equip non-smart based devices with the ability to shed load and reduce operating costs for the homeowner in response to incoming demand response signals. Another advantage resides in the ability to include old design devices in the areas where manufacturers are lacking in adapting their products to the new smart technology. (See [0019])-[0020]

Therefore, Applicant respectfully submits that Special Status is sought on the basis that the present invention materially contributes to the more efficient utilization and conservation of energy resources.

The undersigned representative may be contacted at the number below to facilitate the resolution of any matters. Please charge any fees that are incurred in connection with this Statement to deposit account no. 09-0470.

Respectfully submitted,

General Electric Company

By : /Allison W. Mages/
Allison W. Mages
Reg. No. 57,275

Dated: November 15, 2011

GE Global Patent Operation
2 Corporate Drive, Suite 648
Shelton, CT 06484
203-944-6730

Doc Code: PET.GREEN
Document Description: Petition for Green Tech Pilot

PTO/SB/420 (03-11)

# PETITION TO MAKE SPECIAL UNDER THE GREEN TECHNOLOGY PILOT PROGRAM

| Attorney Docket Number: 246228-1 (GECZ 201148US01) | Application Number (if known): 13/014,153 | Filing date: 01-26-2011 |
|---|---|---|

First Named Inventor: John K. BESORE

Title: SMART PLUG WITH INTERNAL CONDITION-BASED DEMAND RESONSE CAPABILITY

**APPLICANT HEREBY REQUESTS TO PARTICIPATE IN THE GREEN TECHNOLOGY PILOT PROGRAM FOR THE ABOVE-IDENTIFIED APPLICATION. See Instruction Sheet on page 2.**

This petition must be timely filed electronically using the USPTO electronic filing system, EFS-Web.

1. By filing this petition:

   **Applicant is requesting early publication: Applicant hereby requests early publication under 37 CFR 1.219 and the publication fee set forth in 37 CFR 1.18(d) accompanies this request.**

2. By filing this petition: applicant is agreeing to make an election without traverse in a telephonic interview and elect an invention that meets the eligibility requirements for the Green Technology Pilot Program, if the Office determines that the claims are not obviously directed to a single invention. See Instruction Sheet.

3. This request is accompanied by statements of special status for the eligibility requirement.

4. The application contains no more than three (3) independent claims and twenty (20) total claims.

5. The application does not contain any multiple dependent claims.

6. Other attachments: Statement Concerning the Basis for the Special Status

| Signature /Allison W. Mages/ | Date November 15, 2011 |
|---|---|
| Name (Print/Typed) Allison W. Mages | Registration Number 57,275 |

*Note: Signatures of all the inventors or assignees of record of the entire interest or their representative(s) are required in accordance with 37 CFR 1.33 and 11.18. Please see 37 CFR 1.4(d) for the form of the signature. If necessary, submit multiple forms for more than one signature, see below*.*

☐ *Total of _____ forms are submitted.

*If you need assistance in completing the form, call 1-800-PTO-9199 and select option 2.*

UNITED STATES PATENT AND TRADEMARK OFFICE

UNITED STATES DEPARTMENT OF COMMERCE
United States Patent and Trademark Office
Address: COMMISSIONER FOR PATENTS
P.O. Box 1450
Alexandria, Virginia 22313-1450
www.uspto.gov

| APPLICATION NO. | FILING DATE | FIRST NAMED INVENTOR | ATTORNEY DOCKET NO. | CONFIRMATION NO. |
|---|---|---|---|---|
| 13/014,153 | 01/26/2011 | John K. Besore | 246228 | 1055 |

27885 7590 12/14/2011
FAY SHARPE LLP
1228 Euclid Avenue, 5th Floor
The Halle Building
Cleveland, OH 44115

| EXAMINER | |
|---|---|
| FUREMAN, JARED | |
| ART UNIT | PAPER NUMBER |
| 2836 | |
| MAIL DATE | DELIVERY MODE |
| 12/14/2011 | PAPER |

**Please find below and/or attached an Office communication concerning this application or proceeding.**

The time period for reply, if any, is set in the attached communication.

UNITED STATES PATENT AND TRADEMARK OFFICE

Commissioner for Patents
United States Patent and Trademark Office
P.O. Box 1450
Alexandria, VA 22313-1450
www.uspto.gov

FAY SHARPE LLP
1228 Euclid Avenue, 5th Floor
The Halle Building
Cleveland OH 44115

DEC 14 2011

In re Application of :
BESORE et al. : DECISION ON PETITION
Application No. 13/014,153 : TO MAKE SPECIAL UNDER
Filed: January 26, 2011 : THE GREEN TECHNOLOGY
Attorney Docket No.: 246228 : PILOT PROGRAM

This is a decision on the petition under 37 CFR 1.102, filed on November 15, 2011, to make the above-identified application special under the pilot program for applications pertaining to Green Technologies as set forth 74 Federal Register Notice 64666 (December 8, 2009) and amended by 75 Federal Register Notice 28554 (May 21, 2010) and 75 Federal Register Notice 69049 (November 10, 2010).

The petition is **DISMISSED**.

If reconsideration of this decision is desired, a petition for reconsideration must be filed within ONE (1) MONTH OR THIRTY (30) DAYS from the mail date of this decision, whichever is longer. No extension of this time limit can be granted under 37 CFR 1.136(a) or (b). The petition for reconsideration should include an exhaustive attempt to provide the lacking item(s) noted below, since, after a decision on the petition for reconsideration, no further reconsideration or review of the matter will be undertaken by the Director.

A grantable petition to make an application special under 37 CFR 1.102 and the pilot program as set forth in 74 FR 64666 must be directed to a nonprovisional application filed under 35 USC 111(a) or be a national stage entry under 35 USC 371, exclusive of any reissue applications and be filed prior to the date of the notice, December 8, 2009.

In order to qualify for special status, the following requirements must be met. 1) The application must have no more than 3 independent claims and no more than 20 total claims. 2) The application must not contain any multiple dependent claims. 3) The petition must state the basis for seeking special status, i.e., the claimed invention either: A) materially enhances the quality of the environment or B) materially contributes to: i) the discovery or development of renewable energy resources, ii) the more efficient utilization and conservation of energy resources, or iii) greenhouse gas emission reduction. 4) If the disclosure is not clear on its face that the claimed invention materially contributes under category (A) or (B), the petition must be accompanied by

a statement by the applicant, assignee, or an attorney/agent registered to practice before the Office explaining how the materiality standard is met. 5) A statement that applicant will agree to make an election without traverse in a telephonic interview if a restriction requirement is made by the examiner. 6) The petition to make special must be filed electronically. 7) The petition must be filed at least one day prior to the date that a first Office Action appears in the Patent Application Information Retrieval (PAIR) system. 8) The petition must be accompanied by a request for early publication in compliance with 37 CFR 1.219 and include the publication fee as set forth in 37 CFR 1.18(d).

The requirement for a fee for consideration of the petition to make special for applications pertaining to Green Technologies has been waived.

The petition lacks item 4.

In regard to item 4, the petition alleges that the claimed invention contributes to more efficient utilization and conservation of energy. The claims are drawn to a switch. The materiality standard does not permit an applicant to speculate as to how a hypothetical end-user might specially apply the invention in a manner that could contribute to more efficient utilization and conservation of energy. Any argument as to how the claimed invention can be used with is considered speculative as to how a hypothetical end-user might specially apply the claimed invention. Further, while reducing operating costs for the homeowner may be desirable, it is not an indication that the materiality standard is met.

Any reconsideration of this decision should be submitted through the USPTO electronic filing system, EFS-Web, and selecting the document description of "Petition for Green Tech Pilot" on the EFS-Web screen.

Telephone inquiries concerning this decision should be directed to Colleen Dunn at 571-272-1170.

The application is being forwarded to the Technology Center Art Unit for action in its regular turn.

/Colleen Dunn/

Colleen Dunn
TQAS, TC 2800

**IN THE UNITED STATES PATENT AND TRADEMARK OFFICE**

| | |
|---|---|
| **First Named Inventor: John K. BESORE** | ) |
| **Confirmation No.: 1055** | ) |
| | ) |
| **Serial No.: 13/014,153** | ) |
| | ) |
| **Filing Date: 01-26-2011** | ) |
| | ) |
| **Atty Docket No.: 246228-1** | ) |

Commissioner for Patents
P.O. Box 1450
Alexandria, VA 22313-1450

**Request for Reconsideration**

SIR:

This is responsive to the Decision on Petition, dated as mailed 14 December 2011, in the above-referenced application.

Applicant respectfully requests reconsideration of Applicant's Petition to Make Special on the basis that the present invention materially contributes to the more efficient utilization and conservation of energy resources.

The Decision to Make Special Under the Green Technology Pilot Program (hereinafter "the Decision") alleges that the claims are drawn to a switch. The Decision further alleges that any argument as to how the claimed invention can be used is considered speculative as to how a hypothetical end-user might specially apply the claimed invention. Further, the Decision states that, while reducing operating costs for the homeowner may be desirable, it is not an indication that the materiality standard is met. Applicant does not agree with the comments made in the Decision.

Applicant respectfully submits that embodiments of the present invention relate to energy management, and more particularly to energy management or demand supply management (DSM) of household consumer devices. The disclosure finds particular application in modifying or incorporating energy savings features and functions via a smart load switch that includes a built-in circuit that responds to incoming demand response signals from utilities to shed load and reduce operating costs for the homeowner. The concept will also find application with regard to various home devices such as window air conditioners, pool heaters, dehumidifiers, space heaters, water chillers, etc. (see at least paragraph [0001]).

Smart technology generally relates to a class of technology that uses computer-based remote control and automation. These systems are made possible by two-way communication technology and computer processing and offer many benefits to utilities and consumers; mostly seen in big improvements in energy efficiency. Amongst several benefits, smart energy technologies allow for greater informational awareness and control of energy flow. This informational awareness allows consumers to interface with their energy consumption, providing new levels of detail on how, and how much, electricity is being consumed and at what cost in real time, and give them the tools to increase or decrease their consumption. It also allows utilities to more efficiently manage and adjust electricity transmission, reducing the likelihood of outages and congestion while improving billing accuracy for consumers. Smart energy generally provides consumers and utilities a greater ability to adapt to changing market conditions

for greater energy efficiency. ("Smart Grid", Office of Electricity Delivery & Energy Reliability. 2011. Web. 28 July 2011).

A number of companies are currently offering smart devices that are linked to a smart meter or to a home energy management (HEM) system which, in turn, is linked to the smart meter or linked to some other communication system. This allows the device to obtain data or inputs coming into a home area network from outside the home to trigger demand response events for the various devices. That is, utilities generally charge a flat rate but as fuel prices increase and there is an associated high energy usage during select parts of the day, utilities have become more sophisticated with regard to variable rates relating to the energy supplied to customers. Customers or homeowners may be charged a higher rate during peak demand when energy use is high and charged a lower rate when demand for energy is reduced. Consequently, operating a particular home device during the different rate periods can result in a substantial difference in energy cost to the homeowner. (see at least paragraph [0002]).

Through use of smart systems, utilities are able to invoke demand response events that can, for example, adjust a thermostat set point based upon the ordering of a demand response event or based upon a specific tier price being announced. Such thermostat systems are typically used to control central heating, ventilation and air conditioning (HVAC) systems. Window air conditioner variants are currently being developed with integral smart systems that respond to similar aforementioned signals. Likewise, many companies are offering load switches that turn generic devices on or off (for example, those devices operating

at 115 volts or 240 volts) based upon an incoming signal such as a demand response or a time of use schedule. (see at least paragraph [0003]).

Embodiments of the present invention relate to a load switch or smart plug configured to monitor a physical variable, such as room temperature, in comparison to control the on and off condition of the plug. (see at least paragraph [0004]). The smart load switch includes a measuring device for monitoring a room condition, a memory for storing data relating to set point conditions, and a controller that receives input data from the measuring device, compares the input data to the set point data stored in memory, and selectively controls the on and off condition of a plug that receives an associated remote plug-in device. (see at least paragraph [0005]).

A primary benefit of the present disclosure is the ability to equip non-smart based devices with the ability to shed load and reduce operating costs for the homeowner in response to incoming demand response signals. Another advantage resides in the ability to include old design devices in the areas where manufacturers are lacking in adapting their products to the new smart technology. Still other benefits and advantages of the present disclosure will become more apparent upon reading and understanding the following detailed description. (see at least paragraphs [0019]-[0021]).

Amongst the benefits discussed above, embodiments of the present invention encourage homeowners and utilities to use devices having the more energy efficient factor in order to reduce demand, save energy, and reduce energy costs. This has been shown to encourage reductions in energy

consumption, and results in greater energy efficiency on the part of consumers and utilities. As such, the present invention promotes the more efficient utilization of and conservation of energy.

The undersigned attorney may be contacted at the number below to facilitate the resolution of any matters. Please charge any fees that are incurred in connection with this Statement to deposit account no. 09-0470.

Respectfully submitted,

General Electric Company

By : /Allison W Mages/
Allison Weiner Mages
Reg. No. 57,275

Dated: January 11, 2012

GE Global Patent Operation
2 Corporate Drive, Suite 648
Shelton, CT 06484
203-944-6730

UNITED STATES PATENT AND TRADEMARK OFFICE

UNITED STATES DEPARTMENT OF COMMERCE
United States Patent and Trademark Office
Address: COMMISSIONER FOR PATENTS
P.O. Box 1450
Alexandria, Virginia 22313-1450
www.uspto.gov

| APPLICATION NO. | FILING DATE | FIRST NAMED INVENTOR | ATTORNEY DOCKET NO. | CONFIRMATION NO. |
|---|---|---|---|---|
| 13/014,153 | 01/26/2011 | John K. Besore | 246228 | 1055 |

27885 7590 01/31/2012

FAY SHARPE LLP
1228 Euclid Avenue, 5th Floor
The Halle Building
Cleveland, OH 44115

| EXAMINER | |
|---|---|
| FUREMAN, JARED | |
| ART UNIT | PAPER NUMBER |
| 2836 | |

| MAIL DATE | DELIVERY MODE |
|---|---|
| 01/31/2012 | PAPER |

**Please find below and/or attached an Office communication concerning this application or proceeding.**

The time period for reply, if any, is set in the attached communication.

UNITED STATES PATENT AND TRADEMARK OFFICE

Commissioner for Patents
United States Patent and Trademark Office
P.O. Box 1450
Alexandria, VA 22313-1450
www.uspto.gov

FAY SHARPE LLP
1228 Euclid Avenue, 5th Floor
The Halle Building
Cleveland OH 44115

JAN 3 1 2012

| | | |
|---|---|---|
| In re Application of | : | |
| Besore et al. | : | DECISION ON PETITION |
| Application No. 13/014,153 | : | TO MAKE SPECIAL UNDER |
| Filed: 1/26/2011 | : | THE GREEN TECHNOLOGY |
| Attorney Docket No. **246228** | : | PILOT PROGRAM |

This is a decision on the request for reconsideration, filed 1/11/2012, to make the above-identified application special under the pilot program for applications pertaining to Green Technologies as set forth in 74 Federal Register Notice 64666 (December 8, 2009) and amended by 75 Federal Register Notice 28554 (May 21, 2010) and 75 Federal Register Notice 69049 (November 10, 2010).

The petition is **GRANTED**.

A grantable petition to make an application special under 37 CFR 1.102 and the pilot program as set forth in 74 FR 64666 must be directed to a nonprovisional application filed under 35 USC 111(a) or be a national stage entry under 35 USC 371, exclusive of any reissue applications.

In order to qualify for special status, the following requirements must be met. 1) The application must have no more than 3 independent claims and no more than 20 total claims. 2) The application must not contain any multiple dependent claims. 3) The petition must state the basis for seeking special status, i.e., the claimed invention either: A) materially enhances the quality of the environment or B) materially contributes to: i) the discovery or development of renewable energy resources, ii) the more efficient utilization and conservation of energy resources, or iii) greenhouse gas emission reduction. 4) If the disclosure is not clear on its face that the claimed invention materially contributes under category (A) or (B), the petition must be accompanied by a statement by the applicant, assignee, or an attorney/agent registered to practice before the Office explaining how the materiality standard is met. 5) A statement that applicant will agree to make an election without traverse in a telephonic interview if a restriction requirement is made by the examiner. 6) The petition to make special must be filed electronically. 7) The petition must be filed at least one day prior to the date that a first Office Action appears in the Patent Application Information Retrieval (PAIR) system. 8) The petition must be accompanied by a

request for early publication in compliance with 37 CFR 1.219 and include the publication fee as set forth in 37 CFR 1.18(d).

The requirement for a fee for consideration of the petition to make special for applications pertaining to Green Technologies has been waived.

The instant petition complies with items 1 – 8 above. Accordingly, the above-identified application has been accorded "special" status.

Telephone inquires concerning this decision should be directed to Tom Dunn at 571-272-1171.

The application is being forwarded to the Technology Center Art Unit 2836 for action on the merits commensurate with this decision.

/Tom Dunn/

Tom Dunn
Quality Assurance Specialist
Technology Center 1700

UNITED STATES PATENT AND TRADEMARK OFFICE

Commissioner for Patents
United States Patent and Trademark Office
P.O. Box 1450
Alexandria, VA 22313-1450
www.uspto.gov

In re Application of
Murray F Feller

Application No. 13014157

Filed:

Attorney Docket No. F24

:DECISION ON PETITION TO MAKE SPECIAL
:UNDER 37 CFR 1.102(c)(1)

This is a decision on the electronic petition under 37 CFR 1.102 (c)(1), filed 26-JAN-2011 to make the above-identified application special based on applicant's age as set forth in MPEP § 708.02, Section IV.

The petition is **GRANTED**.

A grantable petition to make an application special under 37 CFR 1.102(c)(1), MPEP § 708.02, Section IV: Applicant's Age must include a statement by applicant or a registered practitioner having evidence that applicant is at least 65 years of age. No fee is required.

Accordingly, the above-identified application has been accorded "special" status and will be taken up for action by the examiner upon the completion of all pre-examination processing.

Telephone inquiries concerning this electronic decision should be directed to the Electronic Business Center at 866-217-9197.

All other inquiries concerning either the examination or status of the application should be directed to the Technology Center.

UNITED STATES PATENT AND TRADEMARK OFFICE

·Commissioner for Patents
United States Patent and Trademark Office
P.O. Box 1450
Alexandria, VA 22313-1450
www.uspto.gov

**Hazen Patent Group, LLC**
**1534 W. Islandia Dr.**
**Gillbert AZ 85233**

MAILED

MAY 18 2011

OFFICE OF PETITIONS

In re Application of :
Merton W. Pekrul :
Application No. 13/014,167 : DECISION ON PETITION
Filed: January 26, 2011 : TO MAKE SPECIAL UNDER
Attorney Docket No. MERT0004 : 37 CFR 1.102(c)(1)
:

This is a decision on the petition under 37 CFR 1.102(c)(1), filed April 5, 2011, to make the above-identified application special based on applicant's age as set forth in M.P.E.P. § 708.02, Section IV.

The petition is **GRANTED**.

A grantable petition to make an application special under 37 CFR 1.102(c)(1) and MPEP § 708.02, Section IV: Applicant's Age must be accompanied by evidence showing that at least one of the applicants is 65 years of age, or more, such as a birth certificate or a statement by applicant. No fee is required

The instant petition includes a statement from the attorney of record declaring that he/she is in possession of such evidence that shows the applicant is 65 years of age or older. Accordingly, the above-identified application has been accorded "special" status.

Telephone inquiries concerning this decision should be directed to Terri Johnson at 571-272-2991.

All other inquiries concerning either the examination or status of the application should be directed to the Technology Center.

The application is being forwarded to the Technology Center Art Unit 3748 for action on the merits commensurate with this decision.

/Terri Johnson/
Terri Johnson
Petitions Examiner
Office of Petitions

UNITED STATES PATENT AND TRADEMARK OFFICE

Commissioner for Patents
United States Patent and Trademark Office
P.O. Box 1450
Alexandria, VA 22313-1450
www.uspto.gov

**FINNEGAN, HENDERSON, FARABOW, GARRETT & DUNNER LLP**
**901 NEW YORK AVENUE, NW**
**WASHINGTON DC 20001-4413**

MAILED

SEP 06 2011

OFFICE OF PETITIONS

In re Application of :
Frampton E. Ellis :
Application No. 13/014,201 : DECISION ON PETITION
Filed: January 26, 2011 : TO MAKE SPECIAL UNDER
Attorney Docket No. 05884.0053-00000 : 37 CFR 1.102(c)(1)
:

This is a decision on the petition under 37 CFR 1.102(c)(1), filed August 30, 2011, to make the above-identified application special based on applicant's age as set forth in M.P.E.P. § 708.02, Section IV.

The petition is **GRANTED.**

A grantable petition to make an application special under 37 CFR 1.102(c)(1) and MPEP § 708.02, Section IV: Applicant's Age must be accompanied by evidence showing that at least one of the applicants is 65 years of age, or more, such as a birth certificate or a statement by applicant. No fee is required

The instant petition includes a statement by inventor Frampton E. Ellis, attesting to his/her age. The above-identified application has been accorded "special" status.

Telephone inquiries concerning this decision should be directed to Kimberly Inabinet at 571-272-4618.

All other inquiries concerning either the examination or status of the application should be directed to the Technology Center.

The application is being forwarded to the Technology Center Art Unit 2431 for action on the merits commensurate with this decision.

/Kimberly Inabinet/

Kimberly Inabinet
Petitions Examiner
Office of Petitions

**Doc Code: PET.GREEN**
**Document Description: Petition for Green Tech Pilot**

PTO/SB/420 (03-11)

# PETITION TO MAKE SPECIAL UNDER THE GREEN TECHNOLOGY PILOT PROGRAM

| Attorney Docket Number: | 90367-790631 (000350US) | Application Number (if known): | 13/014,299 | Filing date: | 01-26-2011 |
|---|---|---|---|---|---|

First Named Inventor: PHILIP N. KELLER

Title: COLLAPSIBLE STRUCTURES WITH ADJUSTABLE FORMS

**APPLICANT HEREBY REQUESTS TO PARTICIPATE IN THE GREEN TECHNOLOGY PILOT PROGRAM FOR THE ABOVE-IDENTIFIED APPLICATION. See Instruction Sheet on page 2.**

This petition must be timely filed electronically using the USPTO electronic filing system, EFS-Web.

1. By filing this petition:

   **Applicant is requesting early publication: Applicant hereby requests early publication under 37 CFR 1.219 and the publication fee set forth in 37 CFR 1.18(d) accompanies this request.**

2. By filing this petition: applicant is agreeing to make an election without traverse in a telephonic interview and elect an invention that meets the eligibility requirements for the Green Technology Pilot Program, if the Office determines that the claims are not obviously directed to a single invention. See Instruction Sheet.

3. This request is accompanied by statements of special status for the eligibility requirement.

4. The application contains no more than three (3) independent claims and twenty (20) total claims.

5. The application does not contain any multiple dependent claims.

6. Other attachments: Statement of special status, and preliminary amendment

| Signature | /Jason A. Sanders/ | Date | 04-21-2011 |
|---|---|---|---|
| Name (Print/Typed) | Jason A. Sanders | Registration Number | 59984 |

***Note:*** *Signatures of all the inventors or assignees of record of the entire interest or their representative(s) are required in accordance with 37 CFR 1.33 and 11.18. Please see 37 CFR 1.4(d) for the form of the signature. If necessary, submit multiple forms for more than one signature, see below*.*

☐ *Total of _____ forms are submitted.

*If you need assistance in completing the form, call 1-800-PTO-9199 and select option 2.*

# Instruction Sheet for
# Petition to Make Special Under the Green Technology Pilot Program

(Not to be Submitted to the USPTO)

***The following is a summary of the requirements (for more information see the notices (i) "Pilot Program for Green Technologies Including Greenhouse Gas Reduction," (ii) "Elimination of Classification Requirement in the Green Technology Pilot Program," and (iii) "Expansion and Extension of the Green Technology Pilot Program," available on the USPTO web site at http://www.uspto.gov/patents/init_events/green_tech.jsp):***

(1) The application must be a non-reissue, non-provisional utility application filed under 35 U.S.C. 111(a), or an international application that has entered the national stage in compliance with 35 U.S.C. 371, irrespective of the filing date of the application. Reexamination proceedings are excluded from this pilot program.

(2) The application must contain three or fewer independent claims and twenty or fewer total claims. The application must not contain any multiple dependent claims. For an application that contains more than three independent claims or twenty total claims, or multiple dependent claims, applicant must file a preliminary amendment in compliance with 37 CFR 1.121 to cancel the excess claims and/or the multiple dependent claims at the time the petition to make special is filed.

(3) The claims must be directed to a single invention that materially enhances the quality of the environment, or that materially contributes to: (1) the discovery or development of renewable energy resources; (2) the more efficient utilization and conservation of energy resources; or (3) green house gas emission reduction (see the eligibility requirements of sections II and III of the notice (i) cited above). The petition must include a statement that, if the USPTO determines that the claims are directed to multiple inventions (e.g., in a restriction requirement), applicant will agree to make an election without traverse in a telephonic interview, and elect an invention that meets the eligibility requirements in section II or III of the notice (i) cited above.

(4) The petition to make special must be timely filed electronically using the USPTO electronic filing system, EFS-Web, and selecting the document description of "Petition for Green Tech Pilot" on the EFS-Web screen. Applicant should use form PTO/SB/420, which is available as a Portable Document Format (PDF) fillable form in EFS-Web and on the USPTO Web site.

(5) The petition to make special must be filed at least one day prior to the date that a first Office action (which may be an Office action containing only a restriction requirement) appears in the Patent Application Information Retrieval (PAIR) system. Applicant may check the status of the application using PAIR.

(6) The petition to make special must be accompanied by a request for early publication in compliance with 37 CFR 1.219 and the publication fee set forth in 37 CFR 1.18(d).

# Privacy Act Statement

The **Privacy Act of 1974 (P.L. 93-579)** requires that you be given certain information in connection with your submission of the attached form related to a patent application or patent. Accordingly, pursuant to the requirements of the Act, please be advised that: (1) the general authority for the collection of this information is 35 U.S.C. 2(b)(2); (2) furnishing of the information solicited is voluntary; and (3) the principal purpose for which the information is used by the U.S. Patent and Trademark Office is to process and/or examine your submission related to a patent application or patent. If you do not furnish the requested information, the U.S. Patent and Trademark Office may not be able to process and/or examine your submission, which may result in termination of proceedings or abandonment of the application or expiration of the patent.

The information provided by you in this form will be subject to the following routine uses:

1. The information on this form will be treated confidentially to the extent allowed under the Freedom of Information Act (5 U.S.C. 552) and the Privacy Act (5 U.S.C 552a). Records from this system of records may be disclosed to the Department of Justice to determine whether disclosure of these records is required by the Freedom of Information Act.
2. A record from this system of records may be disclosed, as a routine use, in the course of presenting evidence to a court, magistrate, or administrative tribunal, including disclosures to opposing counsel in the course of settlement negotiations.
3. A record in this system of records may be disclosed, as a routine use, to a Member of Congress submitting a request involving an individual, to whom the record pertains, when the individual has requested assistance from the Member with respect to the subject matter of the record.
4. A record in this system of records may be disclosed, as a routine use, to a contractor of the Agency having need for the information in order to perform a contract. Recipients of information shall be required to comply with the requirements of the Privacy Act of 1974, as amended, pursuant to 5 U.S.C. 552a(m).
5. A record related to an International Application filed under the Patent Cooperation Treaty in this system of records may be disclosed, as a routine use, to the International Bureau of the World Intellectual Property Organization, pursuant to the Patent Cooperation Treaty.
6. A record in this system of records may be disclosed, as a routine use, to another federal agency for purposes of National Security review (35 U.S.C. 181) and for review pursuant to the Atomic Energy Act (42 U.S.C. 218(c)).
7. A record from this system of records may be disclosed, as a routine use, to the Administrator, General Services, or his/her designee, during an inspection of records conducted by GSA as part of that agency's responsibility to recommend improvements in records management practices and programs, under authority of 44 U.S.C. 2904 and 2906. Such disclosure shall be made in accordance with the GSA regulations governing inspection of records for this purpose, and any other relevant (*i.e.*, GSA or Commerce) directive. Such disclosure shall not be used to make determinations about individuals.
8. A record from this system of records may be disclosed, as a routine use, to the public after either publication of the application pursuant to 35 U.S.C. 122(b) or issuance of a patent pursuant to 35 U.S.C. 151. Further, a record may be disclosed, subject to the limitations of 37 CFR 1.14, as a routine use, to the public if the record was filed in an application which became abandoned or in which the proceedings were terminated and which application is referenced by either a published application, an application open to public inspection or an issued patent.
9. A record from this system of records may be disclosed, as a routine use, to a Federal, State, or local law enforcement agency, if the USPTO becomes aware of a violation or potential violation of law or regulation.

UNITED STATES PATENT AND TRADEMARK OFFICE

UNITED STATES DEPARTMENT OF COMMERCE
United States Patent and Trademark Office
Address: COMMISSIONER FOR PATENTS
P.O. Box 1450
Alexandria, Virginia 22313-1450
www.uspto.gov

| APPLICATION NO. | FILING DATE | FIRST NAMED INVENTOR | ATTORNEY DOCKET NO. | CONFIRMATION NO. |
|---|---|---|---|---|
| 13/014,299 | 01/26/2011 | Philip N. Keller | 90367-790631 (000350US) | 1332 |

20350 7590 10/20/2011

KILPATRICK TOWNSEND & STOCKTON LLP
TWO EMBARCADERO CENTER
EIGHTH FLOOR
SAN FRANCISCO, CA 94111-3834

| EXAMINER | |
|---|---|
| ART UNIT | PAPER NUMBER |
| 3644 | |

| NOTIFICATION DATE | DELIVERY MODE |
|---|---|
| 10/20/2011 | ELECTRONIC |

**Please find below and/or attached an Office communication concerning this application or proceeding.**

The time period for reply, if any, is set in the attached communication.

Notice of the Office communication was sent electronically on above-indicated "Notification Date" to the following e-mail address(es):

Docket@kilpatricktownsend.com
ipefiling@kilpatricktownsend.com
jlhice@kilpatrick.foundationip.com

UNITED STATES PATENT AND TRADEMARK OFFICE

Commissioner for Patents
United States Patent and Trademark Office
P.O. Box 1450
Alexandria, VA 22313-1450
www.uspto.gov

OCT 19 2011

KILPATRICK TOWNSEND & STOCKTON LLP
TWO EMBARCADERO CENTER
EIGHTH FLOOR
SAN FRANCISCO CA 94111-3834

| | | |
|---|---|---|
| In re Application of | : | |
| Philip N. Keller et al. | : | DECISION ON PETITION |
| Application No. 13/014,299 | : | TO MAKE SPECIAL UNDER |
| Filed: January 26, 2011 | : | THE GREEN TECHNOLOGY |
| Attorney Docket No.90367-790631 | : | PILOT PROGRAM |

This is a decision on the petition under 37 CFR 1.102, filed on April 21, 2011, to make the above-identified application special under the pilot program for applications pertaining to Green Technologies as set forth in 74 Federal Register Notice 64666 (December 8, 2009) and amended by 75 Federal Register Notice 28554 (May 21, 2010) and 75 Federal Register Notice 69049 (November 10, 2010).

The petition is **GRANTED**.

A grantable petition to make an application special under 37 CFR 1.102 and the pilot program as set forth in 74 FR 64666 must be directed to a nonprovisional application filed under 35 USC 111(a) or be a national stage entry under 35 USC 371, exclusive of any reissue applications.

In order to qualify for special status, the following requirements must be met. 1) The application must have no more than 3 independent claims and no more than 20 total claims. 2) The application must not contain any multiple dependent claims. 3) The petition must state the basis for seeking special status, i.e., the claimed invention either: A) materially enhances the quality of the environment or B) materially contributes to: i) the discovery or development of renewable energy resources, ii) the more efficient utilization and conservation of energy resources, or iii) greenhouse gas emission reduction. 4) If the disclosure is not clear on its face that the claimed invention materially contributes under category (A) or (B), the petition must be accompanied by a statement by the applicant, assignee, or an attorney/agent registered to practice before the Office explaining how the materiality standard is met. 5) A statement that applicant will agree to make an election without traverse in a telephonic interview if a restriction requirement is made by the examiner. 6) The petition to make special must be filed electronically. 7) The petition must be filed at least one day prior to the date that a first Office Action appears in the Patent Application Information Retrieval (PAIR) system. 8) The petition must be accompanied by a request for early publication in compliance with 37 CFR 1.219 and include the publication fee as set forth in 37 CFR 1.18(d).

The requirement for a fee for consideration of the petition to make special for applications pertaining to Green Technologies has been waived.

The petition is granted based on the recitation of an electric vehicle recited in claims 1-3, 6-8 The instant petition complies with items 1 – 8 above. Accordingly, the above-identified application has been accorded "special" status.

Telephone inquires concerning this decision should be directed to Lanna Mai at 571-272-6867.

The application is being forwarded to the Technology Center Art Unit 3644 for action on the merits commensurate with this decision.

/Lanna Mai/

Lanna Mai
Quality Assurance Specialist
Technology Center 3600

**Doc Code: PET.GREEN**
**Document Description: Petition for Green Tech Pilot**

PTO/SB/420 (11-10)
Approved for use through 01/31/2011. OMB 0651-0062
U.S. Patent and Trademark Office; U. S. DEPARTMENT OF COMMERCE
Under the Paperwork Reduction Act of 1995, no persons are required to respond to a collection of information unless it displays a valid OMB control number.

# PETITION TO MAKE SPECIAL UNDER THE GREEN TECHNOLOGY PILOT PROGRAM

| Attorney Docket Number: 053963/401211 | Application Number (if known): Filed Herewith | Filing date: Filed Herewith |
|---|---|---|
| First Named Inventor: Daniel L. Meier | | |
| Title: SOLAR CELL INCLUDING SPUTTERED REFLECTIVE LAYER | | |

**APPLICANT HEREBY REQUESTS TO PARTICIPATE IN THE GREEN TECHNOLOGY PILOT PROGRAM FOR THE ABOVE-IDENTIFIED APPLICATION. See Instruction Sheet on page 2.**

This petition must be timely filed electronically using the USPTO electronic filing system, EFS-Web.

1. By filing this petition:

   **Applicant is requesting early publication: Applicant hereby requests early publication under 37 CFR 1.219 and the publication fee set forth in 37 CFR 1.18(d) accompanies this request.**

2. By filing this petition: applicant is agreeing to make an election without traverse in a telephonic interview and elect an invention that meets the eligibility requirements for the Green Technology Pilot Program, if the Office determines that the claims are not obviously directed to a single invention. See Instruction Sheet.

3. This request is accompanied by statements of special status for the eligibility requirement.

4. The application contains no more than three (3) independent claims and twenty (20) total claims.

5. The application does not contain any multiple dependent claims.

6. Other attachments: _____

| Signature | Date 1/26/11 |
|---|---|
| Name (Print/Typed) Kevin Belote | Registration Number 62,990 |

***Note:*** *Signatures of all the inventors or assignees of record of the entire interest or their representative(s) are required in accordance with 37 CFR 1.33 and 11.18. Please see 37 CFR 1.4(d) for the form of the signature. If necessary, submit multiple forms for more than one signature see below*.*

☐ *Total of _____ forms are submitted.

The information is required to obtain or retain a benefit by the public which is to file (and by the USPTO to process) an application. Confidentiality is governed by 35 U.S.C. 122 and 37 CFR 1.11 and 1.14. This collection is estimated to take 12 hours to complete, including gathering, preparing, and submitting the completed application form to the USPTO. Time will vary depending upon the individual case. Any comments on the amount of time you require to complete this form and/or suggestions for reducing this burden, should be sent to the Chief Information Officer, U.S. Patent and Trademark Office, U.S. Department of Commerce, P.O. Box 1450, Alexandria, VA 22313-1450. DO NOT SEND FEES OR COMPLETED FORMS TO THIS ADDRESS. **SEND TO: Commissioner for Patents, P.O. Box 1450, Alexandria, VA 22313-1450.**

*If you need assistance in completing the form, call 1-800-PTO-9199 and select option 2.*

UNITED STATES PATENT AND TRADEMARK OFFICE

UNITED STATES DEPARTMENT OF COMMERCE
United States Patent and Trademark Office
Address: COMMISSIONER FOR PATENTS
P.O. Box 1450
Alexandria, Virginia 22313-1450
www.uspto.gov

| APPLICATION NO. | FILING DATE | FIRST NAMED INVENTOR | ATTORNEY DOCKET NO. | CONFIRMATION NO. |
|---|---|---|---|---|
| 13/014,352 | 01/26/2011 | Daniel L. Meier | 053963/401211 | 1436 |

826 7590 02/16/2011

ALSTON & BIRD LLP
BANK OF AMERICA PLAZA
101 SOUTH TRYON STREET, SUITE 4000
CHARLOTTE, NC 28280-4000

| EXAMINER | |
|---|---|
| ART UNIT | PAPER NUMBER |
| 1725 | |

| MAIL DATE | DELIVERY MODE |
|---|---|
| 02/16/2011 | PAPER |

**Please find below and/or attached an Office communication concerning this application or proceeding.**

The time period for reply, if any, is set in the attached communication.

UNITED STATES PATENT AND TRADEMARK OFFICE

Commissioner for Patents
United States Patent and Trademark Office
P.O. Box 1450
Alexandria, VA 22313-1450
www.uspto.gov

2/16/2011

ALSTON & BIRD LLP
BANK OF AMERICA PLAZA
101 SOUTH TRYON STREET, SUITE 4000
CHARLOTTE NC 28280-4000

| | | |
|---|---|---|
| In re Application of | : | |
| Meier et al. | : | DECISION ON PETITION |
| Application No. 13/014,352 | : | TO MAKE SPECIAL UNDER |
| Filed: 1/26/2011 | : | THE GREEN TECHNOLOGY |
| Attorney Docket No. **053963/401211** | : | PILOT PROGRAM |

This is a decision on the petition under 37 CFR 1.102, filed 1/26/2011, to make the above-identified application special under the pilot program for applications pertaining to Green Technologies as set forth in 74 Federal Register Notice 64666 (December 8, 2009) and amended by 75 Federal Register Notice 28554 (May 21, 2010) and 75 Federal Register Notice 69049 (November 10, 2010).

The petition is **GRANTED**.

A grantable petition to make an application special under 37 CFR 1.102 and the pilot program as set forth in 74 FR 64666 must be directed to a nonprovisional application filed under 35 USC 111(a) or be a national stage entry under 35 USC 371, exclusive of any reissue applications.

In order to qualify for special status, the following requirements must be met. 1) The application must have no more than 3 independent claims and no more than 20 total claims. 2) The application must not contain any multiple dependent claims. 3) The petition must state the basis for seeking special status, i.e., the claimed invention either: A) materially enhances the quality of the environment or B) materially contributes to: i) the discovery or development of renewable energy resources, ii) the more efficient utilization and conservation of energy resources, or iii) greenhouse gas emission reduction. 4) If the disclosure is not clear on its face that the claimed invention materially contributes under category (A) or (B), the petition must be accompanied by a statement by the applicant, assignee, or an attorney/agent registered to practice before the Office explaining how the materiality standard is met. 5) A statement that applicant will agree to make an election without traverse in a telephonic interview if a restriction requirement is made by the examiner. 6) The petition to make special must be filed electronically. 7) The petition must be filed at least one day prior to the date that a first Office Action appears in the Patent Application Information Retrieval (PAIR) system. 8) The petition must be accompanied by a

request for early publication in compliance with 37 CFR 1.219 and include the publication fee as set forth in 37 CFR 1.18(d).

The requirement for a fee for consideration of the petition to make special for applications pertaining to Green Technologies has been waived.

The instant petition complies with items 1 – 8 above. Accordingly, the above-identified application has been accorded "special" status.

Telephone inquires concerning this decision should be directed to Tom Dunn at 571-272-1171.

The application is being forwarded to the Technology Center Art Unit 1725 for action on the merits commensurate with this decision.

/Tom Dunn/

Tom Dunn
Quality Assurance Specialist
Technology Center 1700

Doc code : PET.OP.AGE
Description : Petition to make special based on Age/Health

PTO/SB/130 (07-09)
Approved for use through 07/31/2012. OMB 0651- 0031
U.S. Patent and Trademark Office; U.S. DEPARTMENT OF COMMERCE
Under the Paperwork Reduction Act of 1995, no persons are required to respond to a collection of information unless it contains a valid OMB control number

## PETITION TO MAKE SPECIAL BASED ON AGE FOR ADVANCEMENT OF EXAMINATION UNDER 37 CFR 1.102(c)(1)

### Application Information

| | | | | | |
|---|---|---|---|---|---|
| Application Number | 13/014,405 | Confirmation Number | 1544 | Filing Date | 2011-01-26 |
| Attorney Docket Number (optional) | DubowCont1 | Art Unit | 1627 | Examiner | Fay |
| First Named Inventor | Irvine L. Dubow | | | | |
| Title of Invention | Compositions and Methods for Dry Eye Syndrome | | | | |

**Attention: Office of Petitions**
An application may be made special for advancement of examination upon filing of a petition showing that the applicant is 65 years of age, or more. No fee is required with such a petition. See 37 CFR 1.102(c)(1) and MPEP 708.02 (IV).

APPLICANT HEREBY PETITIONS TO MAKE SPECIAL FOR ADVANCEMENT OF EXAMINATION IN THIS APPLICATION UNDER 37 CFR 1.102(c)(1) and MPEP 708.02 (IV) ON THE BASIS OF THE APPLICANT'S AGE.

A grantable petition requires one of the following items:
(1) Statement by one named inventor in the application that he/she is 65 years of age, or more; or
(2) Certification by a registered attorney/agent having evidence such as a birth certificate, passport, driver's license, etc. showing one named inventor in the application is 65 years of age, or more.

**Name of Inventor who is 65 years of age, or older**

| Given Name | Middle Name | Family Name | Suffix |
|---|---|---|---|
| Irvine | L. | Dubow | |

A signature of the applicant or representative is required in accordance with 37 CFR 1.33 and 10.18.
Please see 37 CFR 1.4(d) for the format of the signature.

Select (1) or (2) :

○ (1) I am an inventor in this application and I am 65 years of age, or more.

● (2) I am an attorney or agent registered to practice before the Patent and Trademark Office, and I certify that I am in possession of evidence, and will retain such in the application file record, showing that the inventor listed above is 65 years of age, or more.

| | | | |
|---|---|---|---|
| Signature | /Albert W. Watkins, reg. 31,676/ | Date (YYYY-MM-DD) | 2011-11-01 |
| Name | Albert W. Watkins | Registration Number | 31676 |

PTO/SB/130 (07-09)
Approved for use through 07/31/2012. OMB 0651- 0031
U.S. Patent and Trademark Office; U.S. DEPARTMENT OF COMMERCE
Under the Paperwork Reduction Act of 1995, no persons are required to respond to a collection of information unless it contains a valid OMB control number

# Privacy Act Statement

The Privacy Act of 1974 (P.L. 93-579) requires that you be given certain information in connection with your submission of the attached form related to a patent application or patent. Accordingly, pursuant to the requirements of the Act, please be advised that: (1) the general authority for the collection of this information is 35 U.S.C. 2(b)(2); (2) furnishing of the information solicited is voluntary; and (3) the principal purpose for which the information is used by the U.S. Patent and Trademark Office is to process and/or examine your submission related to a patent application or patent. If you do not furnish the requested information, the U.S. Patent and Trademark Office may not be able to process and/or examine your submission, which may result in termination of proceedings or abandonment of the application or expiration of the patent.

The information provided by you in this form will be subject to the following routine uses:

1. The information on this form will be treated confidentially to the extent allowed under the Freedom of Information Act (5 U.S.C. 552) and the Privacy Act (5 U.S.C. 552a). Records from this system of records may be disclosed to the Department of Justice to determine whether the Fr eedom of Information Act requires disclosure of these records.

2. A record from this system of records may be disclosed, as a routine use, in the course of presenting evidence to a court, magistrate, or administrative tribunal, including disclosures to opposing counsel in the course of settlement negotiations.

3. A record in this system of records may be disclosed, as a routine use, to a Member of Congress submitting a request involving an individual, to whom the record pertains, when the individual has requested assistance from the Member with respect to the subject matter of the record.

4. A record in this system of records may be disclosed, as a routine use, to a contractor of the Agency having need for the information in order to perform a contract. Recipients of information shall be required to comply with the requirements of the Privacy Act of 1974, as amended, pursuant to 5 U.S.C. 552a(m).

5. A record related to an International Application filed under the Patent Cooperation Treaty in this system of records may be disclosed, as a routine use, to the International Bureau of the World Intellectual Property Organization, pursuant to the Patent Cooperation Treaty.

6. A record in this system of records may be disclosed, as a routine use, to another federal agency for purposes of National Security review (35 U.S.C. 181) and for review pursuant to the Atomic Energy Act (42 U.S.C. 218(c)).

7. A record from this system of records may be disclosed, as a routine use, to the Administrator, General Services, or his/her designee, during an inspection of records conducted by GSA as part of that agency's responsibility to recommend improvements in records management practices and programs, under authority of 44 U.S.C. 2904 and 2906. Such disclosure shall be made in accordance with the GSA regulations governing inspection of records for this purpose, and any other relevant (i.e., GSA or Commerce) directive. Such disclosure shall not be used to make determinations about indivi duals.

8. A record from this system of records may be disclosed, as a routine use, to the public after either publication of the application pursuant to 35 U.S.C. 122(b) or issuance of a patent pursuant to 35 U.S.C. 151. Further, a record may be disclosed, subject to the limitations of 37 CFR 1.14, as a routine use, to the public if the record was filed in an application which became abandoned or in which the proceedings were terminated and which application is referenced by either a published application, an application open to public inspections or an issued patent.

9. A record from this system of records may be disclosed, as a routine use, to a Federal, State, or local law enforcement agency, if the USPTO becomes aware of a violation or potential violation of law or regulation.

UNITED STATES PATENT AND TRADEMARK OFFICE

Commissioner for Patents
United States Patent and Trademark Office
P.O. Box 1450
Alexandria, VA 22313-1450
www.uspto.gov

In re Application of
Irvine L. Dubow

Application No. 13014405

Filed: January 26,2011

Attorney Docket No. DubowCont1

:DECISION ON PETITION TO MAKE SPECIAL
:UNDER 37 CFR 1.102(c)(1)

This is a decision on the electronic petition under 37 CFR 1.102 (c)(1), filed 01-NOV-2011 to make the above-identified application special based on applicant's age as set forth in MPEP § 708.02, Section IV.

The petition is **GRANTED**.

A grantable petition to make an application special under 37 CFR 1.102(c)(1), MPEP § 708.02, Section IV: Applicant's Age must include a statement by applicant or a registered practitioner having evidence that applicant is at least 65 years of age. No fee is required.

Accordingly, the above-identified application has been accorded "special" status and will be taken up for action by the examiner upon the completion of all pre-examination processing.

Telephone inquiries concerning this electronic decision should be directed to the Electronic Business Center at 866-217-9197.

All other inquiries concerning either the examination or status of the application should be directed to the Technology Center.

## SPE RESPONSE FOR CERTIFICATE OF CORRECTION

DATE : 11/14/11

TO SPE OF : ART UNIT 3612

SUBJECT : Request for Certificate of Correction for Appl. No.: 13014439 Patent No.: 7992924

CofC mailroom date: 11/10/11

Please respond to this request for a certificate of correction within 7 days.

**FOR IFW FILES:**

Please review the requested changes/corrections as shown in the **COCIN** document(s) in the IFW application image. No new matter should be introduced, nor should the scope or meaning of the claims be changed.

Please complete the response (see below) and forward the completed response to scanning using document code **COCX**.

**FOR PAPER FILES:**

Please review the requested changes/corrections as shown in the attached certificate of correction. Please complete this form (see below) and forward it with the file to:

**Certificates of Correction Branch (CofC)**
**Randolph Square – 9D10-A**
**Palm Location 7580**
*You can fax the Directors/SPE response to 571-273-3421*

Note: **Should the changes to claim 19 be approved?**

*Lamonte Newsome*

**Certificates of Correction Branch**

**571-272-3421**

**Thank You For Your Assistance**

**The request for issuing the above-identified correction(s) is hereby:**
Note your decision on the appropriate box.

**SPE RESPONSE FOR CERTIFICATE OF CORRECTION**

☑ **Approved** — **All** changes apply.

☐ **Approved in Part** — Specify below which changes **do not** apply.

☐ **Denied** — State the reasons for denial below.

**Comments:** _____

D. GLENN DAYOAN
SUPERVISORY PATENT EXAMINER
TECHNOLOGY CENTER 3600

3612

**SPE** **Art Unit**

UNITED STATES PATENT AND TRADEMARK OFFICE

UNITED STATES DEPARTMENT OF COMMERCE
United States Patent and Trademark Office
Address: COMMISSIONER FOR PATENTS
P.O. Box 1450
Alexandria, Virginia 22313-1450
www.uspto.gov

| APPLICATION NO. | FILING DATE | FIRST NAMED INVENTOR | ATTORNEY DOCKET NO. | CONFIRMATION NO. |
|---|---|---|---|---|
| 13/014,464 | 01/26/2011 | Ryan W. Hunt | 222102-1610 | 1657 |

24504 7590 12/15/2011

THOMAS, KAYDEN, HORSTEMEYER & RISLEY, LLP
400 INTERSTATE NORTH PARKWAY SE
SUITE 1500
ATLANTA, GA 30339

| EXAMINER | |
|---|---|
| POON, PETER M | |

| ART UNIT | PAPER NUMBER |
|---|---|
| 3643 | |

| NOTIFICATION DATE | DELIVERY MODE |
|---|---|
| 12/15/2011 | ELECTRONIC |

**Please find below and/or attached an Office communication concerning this application or proceeding.**

The time period for reply, if any, is set in the attached communication.

Notice of the Office communication was sent electronically on above-indicated "Notification Date" to the following e-mail address(es):

uspatents@tkhr.com
kristen.layton@tkhr.com
ozzie.liggins@tkhr.com

UNITED STATES PATENT AND TRADEMARK OFFICE

Commissioner for Patents
United States Patent and Trademark Office
P.O. Box 1450
Alexandria, VA 22313-1450
www.uspto.gov

DEC 15 2011

24504
THOMAS, KAYDEN, HORSTEMEYER & RISLEY, LLP
600 GALLERIA PARKWAY, S.E.
STE 1500
ALTANTA, GA 30339-5994

| | | |
|---|---|---|
| In re Application of | : | PETITION TO |
| Hunt et al. | : | ACCEPT COLOR |
| Application No. 13/014,464 | : | DRAWINGS/PHOTOGRAPHS |
| Filed: January 26, 2011 | : | |

For: BIOLOGICAL OPTIMIZATION SYSTEMS FOR ENHANCING PHOTOSYNTHETIC EFFICIENCY AND METHODS OF USE

This is a decision on applicant's petition under 37 CFR 1.184(A)(2) filed January 26, 2011 to accept color drawings/photographs.

For the acceptance of color drawings in accordance with 37 CFR 1.184(A)(2), a petition is required which fulfills the following requirements:

(i) The appropriate fee set forth in 1.17(h),
(ii)* three (3) sets of color drawings/photographs, and
(iii) amending the specification to contain the following language as the first paragraph in that portion of the specification relating to the brief description of the drawings: "The file of this patent contains at least one drawing executed in color photography. Copies of this patent with color photographs will be provided by the Patent and Trademark Office upon request and payment of necessary fee."

*The requirement for three (3) sets of color drawings under 37 CFR 1.84(a)(2)(ii) is not applicable to color drawings submitted via EFS-Web. Therefore, only one set of such color drawings is necessary when filing via EFS-Web.

Having met the requirements of 37 CFR 1.184(A)(2), the petition is **GRANTED**.

Any questions or comments with respect to the decision should be forwarded to Supervisory Patent Examiner, Peter M. Poon at the number listed below.

Peter M. Poon
Supervisory Patent Examiner
Art Unit 3643
(571) 272-6891

pmp: 12/14/11

**Doc Code: PET.GREEN**
**Document Description: Petition for Green Tech Pilot**

PTO/SB/420 (11-10)
Approved for use through 01/31/2011. OMB 0651-0062
U.S. Patent and Trademark Office; U. S. DEPARTMENT OF COMMERCE
Under the Paperwork Reduction Act of 1995, no persons are required to respond to a collection of information unless it displays a valid OMB control number.

# PETITION TO MAKE SPECIAL UNDER THE GREEN TECHNOLOGY PILOT PROGRAM

| Attorney Docket Number: COP41166US | Application Number (if known): 13/014,490 | Filing date: 01/26/2011 |
|---|---|---|
| First Named Inventor: Andreas JESS | | |
| Title: BIOMASS PYROLYSIS IN REFINERY FEEDSTOCK | | |

**APPLICANT HEREBY REQUESTS TO PARTICIPATE IN THE GREEN TECHNOLOGY PILOT PROGRAM FOR THE ABOVE-IDENTIFIED APPLICATION. See Instruction Sheet on page 2.**

This petition must be timely filed electronically using the USPTO electronic filing system, EFS-Web.

1. By filing this petition:

   **Applicant is requesting early publication: Applicant hereby requests early publication under 37 CFR 1.219 and the publication fee set forth in 37 CFR 1.18(d) accompanies this request.**

2. By filing this petition: applicant is agreeing to make an election without traverse in a telephonic interview and elect an invention that meets the eligibility requirements for the Green Technology Pilot Program, if the Office determines that the claims are not obviously directed to a single invention. See Instruction Sheet.

3. This request is accompanied by statements of special status for the eligibility requirement.

4. The application contains no more than three (3) independent claims and twenty (20) total claims.

5. The application does not contain any multiple dependent claims.

6. Other attachments: _____

| Signature /Tamsen Valoir/ | Date 03/18/2011 |
|---|---|
| Name (Print/Typed) Tamsen Valoir | Registration Number 41417 |

***Note:*** *Signatures of all the inventors or assignees of record of the entire interest or their representative(s) are required in accordance with 37 CFR 1.33 and 11.18. Please see 37 CFR 1.4(d) for the form of the signature. If necessary, submit multiple forms for more than one signature see below*.*

☐ *Total of ..... forms are submitted.

The information is required to obtain or retain a benefit by the public which is to file (and by the USPTO to process) an application. Confidentiality is governed by 35 U.S.C. 122 and 37 CFR 1.11 and 1.14. This collection is estimated to take 12 hours to complete, including gathering, preparing, and submitting the completed application form to the USPTO. Time will vary depending upon the individual case. Any comments on the amount of time you require to complete this form and/or suggestions for reducing this burden, should be sent to the Chief Information Officer, U.S. Patent and Trademark Office, U.S. Department of Commerce, P.O. Box 1450, Alexandria, VA 22313-1450. DO NOT SEND FEES OR COMPLETED FORMS TO THIS ADDRESS. **SEND TO: Commissioner for Patents, P.O. Box 1450, Alexandria, VA 22313-1450.**

*If you need assistance in completing the form, call 1-800-PTO-9199 and select option 2.*

PTO/SB/420 (11-10)
Approved for use through 01/31/2011. OMB 0651-0062
U.S. Patent and Trademark Office; U. S. DEPARTMENT OF COMMERCE
Under the Paperwork Reduction Act of 1995, no persons are required to respond to a collection of information unless it displays a valid OMB control number.

# Instruction Sheet for Petition to Make Special Under the Green Technology Pilot Program

(Not to be Submitted to the USPTO)

**The following is a summary of the requirements (for more information see the notices (i) "Pilot Program for Green Technologies Including Greenhouse Gas Reduction," (ii) "Elimination of Classification Requirement in the Green Technology Pilot Program," and (iii) "Expansion and Extension of the Green Technology Pilot Program," available on the USPTO web site at http://www.uspto.gov/patents/init_events/green_tech.jsp):**

1) The application must be a non-reissue, non-provisional utility application filed under 35 U.S.C. 111 (a), or an international application that has entered the national stage in compliance with 35 U.S.C. 371, irrespective of the filing date of the application. Reexamination proceedings are excluded from this pilot program.

2) The application must contain three or fewer independent claims and twenty or fewer total claims. The application must not contain any multiple dependent claims. For an application that contains more than three independent claims or twenty total claims, or multiple dependent claims, applicant must file a preliminary amendment in compliance with 37 CFR 1.121 to cancel the excess claims and/or the multiple dependent claims at the time the petition to make special is filed.

3) The claims must be directed to a single invention that materially enhances the quality of the environment, or that materially contributes to: (1) the discovery or development of renewable energy resources; (2) the more efficient utilization and conservation of energy resources; or (3) green house gas emission reduction (see the eligibility requirements of sections II and III of the notice (i) cited above). The petition must include a statement that, if the USPTO determines that the claims are directed to multiple inventions (e.g., in a restriction requirement), applicant will agree to make an election without traverse in a telephonic interview, and elect an invention that meets the eligibility requirements in section II or III of the notice (i) cited above.

4) The petition to make special must be timely filed electronically using the USPTO electronic filing system, EFS-Web, and selecting the document description of "Petition for Green Tech Pilot" on the EFS-Web screen. Applicant should use form PTO/SB/420, which is available as a Portable Document Format (PDF) fillable form in EFS-Web and on the USPTO Web site.

5) The petition to make special must be filed at least one day prior to the date that a first Office action (which may be an Office action containing only a restriction requirement) appears in the Patent Application Information Retrieval (PAIR) system. Applicant may check the status of the application using PAIR.

6) The petition to make special must be accompanied by a request for early publication in compliance with 37 CFR 1.219 and the publication fee set forth in 37 CFR 1.18(d).

## Privacy Act Statement

The **Privacy Act of 1974 (P.L. 93-579)** requires that you be given certain information in connection with your submission of the attached form related to a patent application or patent. Accordingly, pursuant to the requirements of the Act, please be advised that: (1) the general authority for the collection of this information is 35 U.S.C. 2(b)(2); (2) furnishing of the information solicited is voluntary; and (3) the principal purpose for which the information is used by the U.S. Patent and Trademark Office is to process and/or examine your submission related to a patent application or patent. If you do not furnish the requested information, the U.S. Patent and Trademark Office may not be able to process and/or examine your submission, which may result in termination of proceedings or abandonment of the application or expiration of the patent.

The information provided by you in this form will be subject to the following routine uses:

1. The information on this form will be treated confidentially to the extent allowed under the Freedom of Information Act (5 U.S.C. 552) and the Privacy Act (5 U.S.C 552a). Records from this system of records may be disclosed to the Department of Justice to determine whether disclosure of these records is required by the Freedom of Information Act.
2. A record from this system of records may be disclosed, as a routine use, in the course of presenting evidence to a court, magistrate, or administrative tribunal, including disclosures to opposing counsel in the course of settlement negotiations.
3. A record in this system of records may be disclosed, as a routine use, to a Member of Congress submitting a request involving an individual, to whom the record pertains, when the individual has requested assistance from the Member with respect to the subject matter of the record.
4. A record in this system of records may be disclosed, as a routine use, to a contractor of the Agency having need for the information in order to perform a contract. Recipients of information shall be required to comply with the requirements of the Privacy Act of 1974, as amended, pursuant to 5 U.S.C. 552a(m).
5. A record related to an International Application filed under the Patent Cooperation Treaty in this system of records may be disclosed, as a routine use, to the International Bureau of the World Intellectual Property Organization, pursuant to the Patent Cooperation Treaty.
6. A record in this system of records may be disclosed, as a routine use, to another federal agency for purposes of National Security review (35 U.S.C. 181) and for review pursuant to the Atomic Energy Act (42 U.S.C. 218(c)).
7. A record from this system of records may be disclosed, as a routine use, to the Administrator, General Services, or his/her designee, during an inspection of records conducted by GSA as part of that agency's responsibility to recommend improvements in records management practices and programs, under authority of 44 U.S.C. 2904 and 2906. Such disclosure shall be made in accordance with the GSA regulations governing inspection of records for this purpose, and any other relevant (*i.e.*, GSA or Commerce) directive. Such disclosure shall not be used to make determinations about individuals.
8. A record from this system of records may be disclosed, as a routine use, to the public after either publication of the application pursuant to 35 U.S.C. 122(b) or issuance of a patent pursuant to 35 U.S.C. 151. Further, a record may be disclosed, subject to the limitations of 37 CFR 1.14, as a routine use, to the public if the record was filed in an application which became abandoned or in which the proceedings were terminated and which application is referenced by either a published application, an application open to public inspection or an issued patent.
9. A record from this system of records may be disclosed, as a routine use, to a Federal, State, or local law enforcement agency, if the USPTO becomes aware of a violation or potential violation of law or regulation.

Docket No.: COP41166US

**IN THE UNITED STATES PATENT AND TRADEMARK OFFICE**

In re Patent Application of:
Andreas JESS et al.

Application No.: 13/014,490 Confirmation No.: 1704

Filed: January 26, 2011 Art Unit: 1723

For: BIOMASS PYROLYSIS IN REFINERY FEEDSTOCK Examiner: Not Known

Mail Stop Petition
Commissioner for Patents
P.O. Box 1450
Alexandria, VA 22313-1450

Dear Sir:

**PETITION FOR EXPEDITED HANDLING OF UTILITY PATENT APPLICATION UNDER GREEN TECHNOLOGY PILOT PROGRM**

Applicant respectfully request that the above-referenced application be made special and advanced out of turn for examination pursuant to Green Technology pilot program implemented on December 8, 2009. Specifically, the application referenced above is related to greenhouse gas emission reduction.

Applicant respectfully represents that the current application meets the requirement set forth in the Federal Register, Vol. 74, No. 234, published on December 8, 2009, pages 64666 through page 64669, and Vol. 75, No. 217, published on November 10, 2010, pages 69049 through 69050. The requirements as stated include the following: 1) the application was filed on or after December 8, 2009; 2) Applicant believes the application will be classified in one of the U.S. classifications listed in Section IV; 3) the current application has no more than three independent claims and twenty or fewer total claims; (4) the claims are directed to a single invention that materially enhances the quality of the environment by reducing greenhouse gas emissions; 5) this petition is filed before December 31, 3011; 6) Applicant believes this petition

is filed before the mailing of a first Office Action; and 7) Applicant is concurrently submitting a petition to request early publication in compliance with 37 C.F.R. 1.219 along with the publication fee set for in 37 C.F.R. 1.18(d).

The current application materially enhances the quality of the environment by improving the current petroleum feedstock pyrolysis reaction. More specifically, the cost and efficiency of the pyrolysis reaction is greatly improved. Furthermore, the process of the invention utilizes biomass that produces hydrocarbons, including municipal solid waste, paper, cardboard, food waste, yard waste, livestock waste, organic process waste, crop waste, etc., which provides a meaningful way of recycling the waste materials and thus enhances the quality of the environment.

In light of the nature of the current application as it relates to green technology, Applicant respectfully requests the Commissioner give this application expedited handling.

No additional fees are believed to be due for the submission of this preliminary amendment. However, should there be any additional fees required, please charge such additional fees to Deposit Account No. 50-5378, under Order No. COP41166US (Valoir).

Dated: March 18, 2011

Respectfully submitted,

By /Tamsen Valoir/
Tamsen Valoir, Ph.D.
Registration No.: 41,417
Boulware & Valoir
Three Riverway, Suite 950
Houston, TX 77056
832-369-7852
713-650-6458 (Fax)
Email: mboulware@boulwarevaloir.com

UNITED STATES PATENT AND TRADEMARK OFFICE

UNITED STATES DEPARTMENT OF COMMERCE
United States Patent and Trademark Office
Address: COMMISSIONER FOR PATENTS
P.O. Box 1450
Alexandria, Virginia 22313-1450
www.uspto.gov

| APPLICATION NO. | FILING DATE | FIRST NAMED INVENTOR | ATTORNEY DOCKET NO. | CONFIRMATION NO. |
|---|---|---|---|---|
| 13/014,490 | 01/26/2011 | Andreas JESS | COP:41166US | 1704 |

85937 7590 05/03/2011

Boulware & Valoir
3 Riverway
Suite 950
Houston, TX 77056

| EXAMINER | |
|---|---|
| ART UNIT | PAPER NUMBER |
| 1723 | |

| NOTIFICATION DATE | DELIVERY MODE |
|---|---|
| 05/03/2011 | ELECTRONIC |

**Please find below and/or attached an Office communication concerning this application or proceeding.**

The time period for reply, if any, is set in the attached communication.

Notice of the Office communication was sent electronically on above-indicated "Notification Date" to the following e-mail address(es):

patent@boulwarevaloir.com

UNITED STATES PATENT AND TRADEMARK OFFICE

Commissioner for Patents
United States Patent and Trademark Office
P.O. Box 1450
Alexandria, VA 22313-1450
www.uspto.gov

Boulware & Valoir
3 Riverway
Suite 950
Houston TX 77056

5/3/11

In re Application of :
Jess et al. : DECISION ON PETITION
Application No. 13/014,490 : TO MAKE SPECIAL UNDER
Filed: 1/26/2011 : THE GREEN TECHNOLOGY
Attorney Docket No. **COP:41166US** : PILOT PROGRAM

This is a decision on the petition under 37 CFR 1.102, filed 3/18/2011, to make the above-identified application special under the pilot program for applications pertaining to Green Technologies as set forth in 74 Federal Register Notice 64666 (December 8, 2009) and amended by 75 Federal Register Notice 28554 (May 21, 2010) and 75 Federal Register Notice 69049 (November 10, 2010).

The petition is **DISMISSED**.

If reconsideration of this decision is desired, a petition for reconsideration must be filed within ONE (1) MONTH OR THIRTY (30) DAYS from the mail date of this decision, whichever is longer. No extension of this time limit can be granted under 37 CFR 1.136(a) or (b). The petition for reconsideration should include an exhaustive attempt to provide the lacking item(s) noted below, since, after a decision on the petition for reconsideration, no further reconsideration or review of the matter will be undertaken by the Director.

A grantable petition to make an application special under 37 CFR 1.102 and the pilot program as set forth in 74 FR 64666 must be directed to a nonprovisional application filed under 35 USC 111(a) or be a national stage entry under 35 USC 371, exclusive of any reissue applications.

In order to qualify for special status, the following requirements must be met. 1) The application must have no more than 3 independent claims and no more than 20 total claims. 2) The application must not contain any multiple dependent claims. 3) The petition must state the basis for seeking special status, i.e., the claimed invention either: A) materially enhances the quality of the environment or B) materially contributes to: i) the discovery or development of renewable energy resources, ii) the more efficient utilization and conservation of energy resources, or iii) greenhouse gas emission reduction. 4) If the disclosure is not clear on its face that the claimed invention materially contributes under category (A) or (B), the petition must be accompanied by

a statement by the applicant, assignee, or an attorney/agent registered to practice before the Office explaining how the materiality standard is met. 5) A statement that applicant will agree to make an election without traverse in a telephonic interview if a restriction requirement is made by the examiner. 6) The petition to make special must be filed electronically. 7) The petition must be filed at least one day prior to the date that a first Office Action appears in the Patent Application Information Retrieval (PAIR) system. 8) The petition must be accompanied by a request for early publication in compliance with 37 CFR 1.219 and include the publication fee as set forth in 37 CFR 1.18(d).

The requirement for a fee for consideration of the petition to make special for applications pertaining to Green Technologies has been waived.

The petition lacks item(s) 2.

In regard to item 2, petitioner should note that a review of the claims in the instant application has been made for the purposes of determining the presence of any multiple dependent claims contained therein. The application includes multiple dependent claims and thus does not meet the requirements as set forth in the Notice.

Any reconsideration of this decision should be submitted through the USPTO electronic filing system, EFS-Web, and selecting the document description of "Petition for Green Tech Pilot" on the EFS-Web screen.

Telephone inquiries concerning this decision should be directed to Tom Dunn at 571-272-1171.

The application is being forwarded to the Technology Center Art Unit 1723 for action in its regular turn.

/Tom Dunn/

Tom Dunn
Quality Assurance Specialist
Technology Center 1700

Docket No.: COP41166US

**IN THE UNITED STATES PATENT AND TRADEMARK OFFICE**

In re Patent Application of:
Andreas JESS et al.

Application No.: 13/014,490
Filed: January 26, 2011
For: BIOMASS PYROLYSIS IN REFINERY FEEDSTOCK

Confirmation No.: 1704
Art Unit: 1723
Examiner: Not Known

Mail Stop Petition
Commissioner for Patents
P.O. Box 1450
Alexandria, VA 22313-1450

Dear Sir:

**REQUEST FOR RECONSIDERATION OF THE DISMISSAL OF APPLICATION UNDER GREEN TECHNOLOGY PILOT PROGRM**

In response to the Decision on Petition to Make Special under the Green Technology Pilot Program mailed on May 3rd, 2011, Applicants hereby amend the claims to overcome the lack of conformity of item 2 for the inclusion of multiple dependent claims.

UNITED STATES PATENT AND TRADEMARK OFFICE

UNITED STATES DEPARTMENT OF COMMERCE
United States Patent and Trademark Office
Address: COMMISSIONER FOR PATENTS
P.O. Box 1450
Alexandria, Virginia 22313-1450
www.uspto.gov

| APPLICATION NO. | FILING DATE | FIRST NAMED INVENTOR | ATTORNEY DOCKET NO. | CONFIRMATION NO. |
|---|---|---|---|---|
| 13/014,490 | 01/26/2011 | Andreas JESS | COP:41166US | 1704 |

85937 7590 05/31/2011

Boulware & Valoir
3 Riverway
Suite 950
Houston, TX 77056

| EXAMINER | |
|---|---|
| ART UNIT | PAPER NUMBER |
| 1771 | |

| NOTIFICATION DATE | DELIVERY MODE |
|---|---|
| 05/31/2011 | ELECTRONIC |

**Please find below and/or attached an Office communication concerning this application or proceeding.**

The time period for reply, if any, is set in the attached communication.

Notice of the Office communication was sent electronically on above-indicated "Notification Date" to the following e-mail address(es):

patent@boulwarevaloir.com

UNITED STATES PATENT AND TRADEMARK OFFICE

Commissioner for Patents
United States Patent and Trademark Office
P.O. Box 1450
Alexandria, VA 22313-1450
www.uspto.gov

Boulware & Valoir
3 Riverway
Suite 950
Houston TX 77056

MAY 31 2011

In re Application of :
Andreas Jess et al. : DECISION ON PETITION
Application No. 13/014,490 : TO MAKE SPECIAL UNDER
Filed: January 26, 2011 : THE GREEN TECHNOLOGY
Attorney Docket No. COP:41166US : PILOT PROGRAM

This is a decision on the petition under 37 CFR 1.102, filed May 20, 2011, to make the above-identified application special under the pilot program for applications pertaining to Green Technologies as set forth in 74 Federal Register Notice 64666 (December 8, 2009) and amended by 75 Federal Register Notice 28554 (May 21, 2010) and 75 Federal Register Notice 69049 (November 10, 2010).

The petition is **GRANTED**.

A grantable petition to make an application special under 37 CFR 1.102 and the pilot program as set forth in 74 FR 64666 must be directed to a nonprovisional application filed under 35 USC 111(a) or be a national stage entry under 35 USC 371, exclusive of any reissue applications.

In order to qualify for special status, the following requirements must be met. 1) The application must have no more than 3 independent claims and no more than 20 total claims. 2) The application must not contain any multiple dependent claims. 3) The petition must state the basis for seeking special status, i.e., the claimed invention either: A) materially enhances the quality of the environment or B) materially contributes to: i) the discovery or development of renewable energy resources, ii) the more efficient utilization and conservation of energy resources, or iii) greenhouse gas emission reduction. 4) If the disclosure is not clear on its face that the claimed invention materially contributes under category (A) or (B), the petition must be accompanied by a statement by the applicant, assignee, or an attorney/agent registered to practice before the Office explaining how the materiality standard is met. 5) A statement that applicant will agree to make an election without traverse in a telephonic interview if a restriction requirement is made by the examiner. 6) The petition to make special must be filed electronically. 7) The petition must be filed at least one day prior to the date that a first Office Action appears in the Patent Application Information Retrieval (PAIR) system. 8) The petition must be accompanied by a request for early publication in compliance with 37 CFR 1.219 and include the publication fee as set forth in 37 CFR 1.18(d).

The requirement for a fee for consideration of the petition to make special for applications pertaining to Green Technologies has been waived.

The instant petition complies with items 1 – 8 above. Accordingly, the above-identified application has been accorded "special" status.

Telephone inquires concerning this decision should be directed to Blaine Copenheaver at 571-272-1156.

The application is being forwarded to the examiner for action on the merits commensurate with this decision.

/Blaine Copenheaver/

Blaine Copenheaver
Quality Assurance Specialist
Technology Center 1700

UNITED STATES PATENT AND TRADEMARK OFFICE

UNITED STATES DEPARTMENT OF COMMERCE
United States Patent and Trademark Office
Address: COMMISSIONER FOR PATENTS
P.O. Box 1450
Alexandria, Virginia 22313-1450
www.uspto.gov

| APPLICATION NO. | FILING DATE | FIRST NAMED INVENTOR | ATTORNEY DOCKET NO. | CONFIRMATION NO. |
|---|---|---|---|---|
| 13/014,530 | 01/26/2011 | Hwan Hee JEONG | 3449-1122PUS2 | 1785 |

2292 7590 03/25/2011
BIRCH STEWART KOLASCH & BIRCH
PO BOX 747
FALLS CHURCH, VA 22040-0747

| EXAMINER | |
|---|---|
| DANG, TRUNG Q | |
| ART UNIT | PAPER NUMBER |
| 2892 | |

| NOTIFICATION DATE | DELIVERY MODE |
|---|---|
| 03/25/2011 | ELECTRONIC |

**Please find below and/or attached an Office communication concerning this application or proceeding.**

The time period for reply, if any, is set in the attached communication.

Notice of the Office communication was sent electronically on above-indicated "Notification Date" to the following e-mail address(es):

mailroom@bskb.com

UNITED STATES PATENT AND TRADEMARK OFFICE

Commissioner for Patents
United States Patent and Trademark Office
P.O. Box 1450
Alexandria, VA 22313-1450
www.uspto.gov

**BIRCH STEWART KOLASCH & BIRCH**
**PO BOX 747**
**FALLS CHURCH VA 22040-0747**

**In re Application of**
**Hwan Hee JEONG**
**Application No.: 13/014,530**
**Filed: 26 January 2011**
**Attorney Docket No.: 3449-1122PUS2**
**For: SEMICONDUCTOR LIGHT EMITTING DEVICE**

**: DECISION ON REQUEST TO**
**: PARTICIPATE IN THE PATENT**
**: PROSECUTION HIGHWAY**
**: PROGRAM AND PETITION**
**: TO MAKE SPECIAL UNDER**
**: 37 CFR 1.102(a)**

This is a decision on the request to participate in the Patent Prosecution Highway (PPH) program and the petition under 37 CFR 1.102(a), filed 03 February 2011, to make the above-identified application special.

The request and petition are **GRANTED**.

**Discussion**

A grantable request to participate in the PPH program and petition to make special require:

1. The U.S. application is

   a. a Paris Convention application which either
      i. validly claims priority under 35 U.S.C. 119(a) and 37 CFR 1.55 to one or more applications filed in the KIPO, or
      ii. validly claims priority under 35 U.S.C. 119(a)/365(a) to a PCT application that contains no priority claims,

   or

   b. a national stage application under the PCT (an application which entered the national stage in the U.S. from a PCT international application after compliance with 35 U.S.C. 371), which PCT application
      i. validly claims priority under 35 U.S.C. 365(b) to an application filed in the KIPO, or
      ii. validly claims priority under 35 U.S.C. 365(b) to a PCT application that contains no priority claims, or
      iii. contains no priority claim,

   or

   c. a so-called bypass application filed under 35 U.S.C. 111(a) which validly claims benefit under 35 U.S.C. 120 to a PCT application, which PCT application

i. validly claims priority under 35 U.S.C. 365(b) to an application filed in the KIPO, or
ii. validly claims priority under 35 U.S.C. 365(b) to a PCT application that contains no priority claims, or
iii. contains no priority claim;

2. Applicant must submit a copy of:
   a. The allowable/patentable claim(s) from the KR application(s);
   b. An English translation of the allowable/patentable claim(s), and
   c. A statement that the English translation is accurate (if the claims were published in a language other than English);
3. Applicant must:
   a. Ensure that all the claims in the U.S. application must sufficiently correspond or be amended to sufficiently correspond to the allowable/patentable claim(s) in the KR application(s), and
   b. Submit a claims correspondence table in English;
4. Examination of the U.S. application has not begun;
5. Applicant must submit:
   a. A copy of all the office actions (which are relevant to patentability), excluding "Decision to Grant a Patent" from each of the KR application(s) containing the allowable/patentable claim(s);
   b. An English language translation of the KIPO office action; and
   c. A statement that the English translation is accurate (if the office actions are not in the English language);
6. Applicant must submit:
   a. An IDS listing the documents cited by the KIPO examiner in the KIPO office action (unless already filed in this application); and
   b. Copies of all the documents cited in the KIPO office action, except U.S. patents or U.S. patent application publications (unless already filed in this application);

The request to participate in the PPH program and petition comply with the above requirements. Accordingly, the above-identified application has been accorded "special" status.

Any response must be submitted via EFS-Web.

Telephone inquiries concerning this decision should be directed to Lee W. Young at 571-272-4549.

All other inquiries concerning the examination or status of the application is accessible in the PAIR system at http://uspto.gov/ebc/index.html.

Lee W. Young
TQAS
Technology Center 2800

UNITED STATES PATENT AND TRADEMARK OFFICE

Commissioner for Patents
United States Patent and Trademark Office
P.O. Box 1450
Alexandria, VA 22313-1450
www.uspto.gov

**COOLEY LLP**
**ATTN: PATENT GROUP**
**SUITE 1100**
**777 - 6TH STREET, NW**
**WASHINGTON, DC 20001**

MAILED

MAR 08 2011

OFFICE OF PETITIONS

In re Application of :
**ABHYANKAR,** Saurabh et al. :
Application No. 13/014,544 : DECISION ON PETITION
Filed: January 26, 2011 : TO WITHDRAW
Attorney Docket No. **BOBJ-118/02US 304661-2511** : FROM RECORD

This is a decision on the Request to Withdraw as attorney or agent of record under 37 C.F.R. § 1.36(b), filed February 24, 2011.

The request is **MOOT** because a revocation of power of attorney has been previously filed.

A review of the file record indicates that the power of attorney to COOLEY LLP has been revoked by the assignee of the patent application on January 26, 2011. Accordingly, the request to withdraw under 37 C.F.R. § 1.36(b) is moot.

All future communications from the Office will continue to be directed to the below-listed address until otherwise notified by applicant.

Telephone inquires concerning this decision should be directed to Tredelle Jackson at 571-272-2783.

/Tredelle D. Jackson/
Petitions Examiner
Office of Petitions

cc: **Business Objects Americas; Business Objects S.A.**
**SAP America, Inc.; Business Objects Software Ltd.**
**Business Objects Data Integration, Inc.**
**777 6th Street NW, Suite 1100, Attn: B. Galliani**
**Washington DC 20001**

UNITED STATES PATENT AND TRADEMARK OFFICE

Commissioner for Patents
United States Patent and Trademark Office
P.O. Box 1450
Alexandria, VA 22313-1450
www.uspto.gov

Decision Date : March 20, 2012

In re Application of :

Brian Russell

Application No : 13014582

Filed : 26-Jan-2011

Attorney Docket No : ZEP-110

DECISION ON REQUEST TO WITHDRAW AS ATTORNEY/AGENTOF RECORD

This is an electronic decision on the Request to Withdraw as attorney or agent of record under 37 CFR § 1.36(b), filed March 20, 2012

The request is **APPROVED.**

The request was signed by Melvin Barnes (registration no. 38375 ) on behalf of all attorneys/agents associated with Customer Number 64713 . All attorneys/agents associated with Cusotmer Number 64713 have been withdrawn.

Since there are no remaining attorneys of record, all future communications from the Office will be directed to the first named inventor or assignee that has properly made itself of record pursuant to 37 CFR 3.71, with correspondence address:

| | |
|---|---|
| Name | Zephyr Technology Corporation |
| Name2 | |
| Address 1 | 1 Annapolis Street, Suite 200 |
| Address 2 | |
| City | Annapolis |
| State | MD |
| Postal Code | 21401 |
| Country | US |

As a reminder, requester is required to inform the first named inventor or assignee that has properly made itself of record pursuant to 37 CFR 3.71 of the electronically processed petition.

Telephone inquiries concerning this decision should be directed to the Patent Electronic Business Center (EBC) at 866-217-9197.

Office of Petitions

| | |
|---|---|
| **Doc Code: PET.AUTO**<br>**Document Description: Petition automatically granted by EFS-Web** | PTO/SB/83<br>U.S. Patent and Trademark Office<br>Department of Commerce |

| | |
|---|---|
| Electronic Petition Request | **REQUEST FOR WITHDRAWAL AS ATTORNEY OR AGENT AND CHANGE OF CORRESPONDENCE ADDRESS** |
| Application Number | 13014582 |
| Filing Date | 26-Jan-2011 |
| First Named Inventor | Brian Russell |
| Art Unit | 3739 |
| Examiner Name | |
| Attorney Docket Number | ZEP-110 |
| Title | PHYSIOLOGICAL MONITORING GARMENT |

◉ Please withdraw me as attorney or agent for the above identified patent application and the practitioners of record associated with Customer Number: 64713

The reason(s) for this request are those described in 37 CFR:

10.40(c)(5)

Certifications

☒ I/We have given reasonable notice to the client, prior to the expiration of the response period, that the practitioner(s) intend to withdraw from employment

☒ I/We have delivered to the client or a duly authorized representative of the client all papers and property (including funds) to which the client is entitled

☒ I/We have notified the client of any responses that may be due and the time frame within which the client must respond

Change the correspondence address and direct all future correspondence to the first named inventor or assignee that has properly made itself of record pursuant to 37 CFR 3.71:

| | |
|---|---|
| Name | Zephyr Technology Corporation |
| Address | 1 Annapolis Street, Suite 200 |
| City | Annapolis |
| State | MD |
| Postal Code | 21401 |
| Country | US |

| I am authorized to sign on behalf of myself and all withdrawing practitioners. | |
|---|---|
| Signature | /Melvin Barnes/ |
| Name | Melvin Barnes |
| Registration Number | 38375 |

PTO/SB/420 (11-10)

# PETITION TO MAKE SPECIAL UNDER THE GREEN TECHNOLOGY PILOT PROGRAM

| Attorney Docket Number: | 027364-009610US | Application Number (if known): | 13/014,622 | Filing date: | January 26, 2011 |
|---|---|---|---|---|---|

First Named Inventor: Trottier, Troy Anthony

Title: QUANTUM DOT WAVELENGTH CONVERSION FOR OPTICAL DEVICES USING NONPOLAR OR SEMIPOLAR GALLIUM CONTAINING MATERIALS

**APPLICANT HEREBY REQUESTS TO PARTICIPATE IN THE GREEN TECHNOLOGY PILOT PROGRAM FOR THE ABOVE-IDENTIFIED APPLICATION. See Instruction Sheet on page 2.**

This petition must be timely filed electronically using the USPTO electronic filing system, EFS-Web.

1. By filing this petition:

   **Applicant is requesting early publication: Applicant hereby requests early publication under 37 CFR 1.219 and the publication fee set forth in 37 CFR 1.18(d) accompanies this request.**

2. By filing this petition: applicant is agreeing to make an election without traverse in a telephonic interview and elect an invention that meets the eligibility requirements for the Green Technology Pilot Program, if the Office determines that the claims are not obviously directed to a single invention. See Instruction Sheet.

3. This request is accompanied by statements of special status for the eligibility requirement.

4. The application contains no more than three (3) independent claims and twenty (20) total claims.

5. The application does not contain any multiple dependent claims.

6. Other attachments:_____

| Signature | /Robert C. Colwell/ | Date | February 16, 2011 |
|---|---|---|---|
| Name (Print/Typed) | Robert C. Colwell | Registration Number | 27,431 |

***Note:*** *Signatures of all the inventors or assignees of record of the entire interest or their representative(s) are required in accordance with 37 CFR 1.33 and 11.18. Please see 37 CFR 1.4(d) for the form of the signature. If necessary, submit multiple forms for more than one signature, see below*.*

☐ *Total of_____forms are submitted.

63161519 v1

# Instruction Sheet for
# Petition to Make Special Under the Green Technology Pilot Program

(Not to be Submitted to the USPTO)

**The following is a summary of the requirements (for more information see notices (i) "Pilot Program for Green Technologies Including Greenhouse Gas Reduction," (ii) "Elimination of Classification Requirement in the Green Technology Pilot Program," and (iii) Expansion and Extension of the Green Technology Pilot Program," available on the USPTO web site at http:// www.uspto.gov/patents/init_events/green_tech.jsp):**

1) The application must be a non-reissue, non-provisional utility application filed under 35 U.S.C. 111 (a), or an international application that has entered the national stage in compliance with 35 U.S.C. 371, irrespective of the filing date of the application. Reexamination proceedings are excluded from this pilot program.

2) The application must contain three or fewer independent claims and twenty or fewer total claims. The application must not contain any multiple dependent claims. For an application that contains more than three independent claims or twenty total claims, or multiple dependent claims, applicant must file a preliminary amendment in compliance with 37 CFR 1.121 to cancel the excess claims and/or the multiple dependent claims at the time the petition to make special is filed.

3) The claims must be directed to a single invention that materially enhances the quality of the environment, or that materially contributes to: (1) the discovery or development of renewable energy resources; (2) the more efficient utilization and conservation of energy resources; or (3) green house gas emission reduction (see the eligibility requirements of sections II and III of the notice (i) cited above). The petition must include a statement that, if the USPTO determines that the claims are directed to multiple inventions (e.g., in a restriction requirement), applicant will agree to make an election without traverse in a telephonic interview, and elect an invention that meets the eligibility requirements in section II or III of the notice (i) cited above.

4) The petition to make special must be timely filed electronically using the USPTO electronic filing system, EFS-Web, and selecting the document description of "Petition for Green Tech Pilot" on the EFS-Web screen. Applicant should use form PTO/SB/420, which is available as a Portable Document Format (PDF) fillable form in EFS-Web and on the USPTO Web site.

5) The petition to make special must be filed at least one day prior to the date that a first Office action (which may be an Office action containing only a restriction requirement) appears in the Patent Application Information Retrieval (PAIR) system. Applicant may check the status of the application using PAIR.

6) The petition to make special must be accompanied by a request for early publication in compliance with 37 CFR 1.219 and the publication fee set forth in 37 CFR 1.18(d).

PATENT
Docket No.: 027364-009610US

**IN THE UNITED STATES PATENT AND TRADEMARK OFFICE**

| | |
|---|---|
| In re application of: | Confirmation No.: 1003 |
| Troy Anthony Trottier et al. | Examiner: Unknown |
| Application No.: 13/014,622 | Art Unit: Unknown |
| Filed: January 26, 2011 | |
| For: Quantum Dot Wavelength Conversion for Optical Devices Using Nonpolar or Semipolar Gallium Containing Materials | PETITION TO MAKE SPECIAL UNDER THE GREEN TECHNOLOGY PILOT PROGRAM |
| Customer No.: 20350 | |

Commissioner for Patents
P.O. Box 1450
Alexandria, VA 22313-1450

Commissioner:

Applicant hereby requests to participate in the Green Technology Pilot Program for the above-identified application.

Applicant further requests early publication under 37 CFR1.219 and the publication fee set forth in 37 CFR 1.18(d) accompanies this request. The Commissioner is hereby authorized to charge Deposit Account No. 20-1430 for the amount of $300.

By filing this petition, Applicant is agreeing to make an election without traverse in a telephonic interview and elect an invention that meets the eligibility requirement and the classification requirement set forth in the Federal Register notice entitled "Pilot Program for Green Technologies Including Greenhouse Gas Reduction" that was published in the Federal Register if the Office determines that the claims are not obviously directed to a single invention.

## STATEMENT OF SPECIAL STATUS FOR THE ELIGIBILITY REQUIREMENT

The basis for the special status is that the invention claimed in the above-identified patent application materially contributes to the development of more efficient

utilization and conservation of energy resources. The present invention is related to light-emitting diodes devices, which can be used for various types of lighting applications. Light-emitting diodes promise fundamentally higher efficiencies than traditional lighting technologies such as incandescent and mercury-based fluorescent lamps. Lighting accounts for about 20% of nationwide electricity use. Switching older lighting technologies to high efficiency LED lighting could reduce this electricity consumption in half. That is, an overall 10% reduction in nationwide electricity use. This is a savings of 1100 Terra-Watt-hours/year in energy consumption (or ~ $100B/year energy costs) and a 200M tons/year reduction in global carbon emissions annually. In addition, it could save 125 GW/year in electricity generation requirements ($50B construction cost or more). This invention contributes directly to LED lighting, as the claimed invention is directed to an LED package for electric lights desired to emit particular colored light, e.g., white.

The application does not contain any multiple dependent claims.

Respectfully submitted,

/Robert C. Colwell/

Robert C. Colwell
Reg. No. 27,431

KILPATRICK TOWNSEND & STOCKTON LLP
Two Embarcadero Center, Eighth Floor
San Francisco, California 94111-3834
Tel: (415) 576-0200
Fax: (415) 576-0300
RCC:mks
63161539 v1

UNITED STATES PATENT AND TRADEMARK OFFICE

UNITED STATES DEPARTMENT OF COMMERCE
United States Patent and Trademark Office
Address: COMMISSIONER FOR PATENTS
P.O. Box 1450
Alexandria, Virginia 22313-1450
www.uspto.gov

| APPLICATION NO. | FILING DATE | FIRST NAMED INVENTOR | ATTORNEY DOCKET NO. | CONFIRMATION NO. |
|---|---|---|---|---|
| 13/014,622 | 01/26/2011 | Troy Anthony Trottier | 027364-009610US | 1003 |

20350 7590 04/28/2011

KILPATRICK TOWNSEND & STOCKTON LLP
TWO EMBARCADERO CENTER
EIGHTH FLOOR
SAN FRANCISCO, CA 94111-3834

| EXAMINER | |
|---|---|
| ART UNIT | PAPER NUMBER |
| 2875 | |

| NOTIFICATION DATE | DELIVERY MODE |
|---|---|
| 04/28/2011 | ELECTRONIC |

**Please find below and/or attached an Office communication concerning this application or proceeding.**

The time period for reply, if any, is set in the attached communication.

Notice of the Office communication was sent electronically on above-indicated "Notification Date" to the following e-mail address(es):

Docket@kilpatricktownsend.com
ipefiling@kilpatricktownsend.com
jlhice@kilpatrick.foundationip.com

UNITED STATES PATENT AND TRADEMARK OFFICE

Commissioner for Patents
United States Patent and Trademark Office
P.O. Box 1450
Alexandria, VA 22313-1450
www.uspto.gov

KILPATRICK TOWNSEND & STOCKTON LLP
TWO EMBARCADERO CENTER
EIGHTH FLOOR
SAN FRANCISCO CA 94111-3834

| | | |
|---|---|---|
| In re Application of | : | |
| TROTTIER et al. | : | DECISION ON PETITION |
| Application No. 13/014,622 | : | TO MAKE SPECIAL UNDER |
| Filed: January 26, 2011 | : | THE GREEN TECHNOLOGY |
| Attorney Docket No. 027364-009610US | : | PILOT PROGRAM |

This is a decision on the petition under 37 CFR 1.102, filed on February 16, 2011, to make the above-identified application special under the pilot program for applications pertaining to Green Technologies as set forth 74 Federal Register Notice 64666 (December 8, 2009) and amended by 75 Federal Register Notice 28554 (May 21, 2010) and 75 Federal Register Notice 69049 (November 10, 2010).

The petition is **GRANTED**.

A grantable petition to make an application special under 37 CFR 1.102 and the pilot program as set forth in 74 FR 64666 must be directed to a nonprovisional application filed under 35 USC 111(a) or be a national stage entry under 35 USC 371, exclusive of any reissue applications.

In order to qualify for special status, the following requirements must be met. 1) The application must have no more than 3 independent claims and no more than 20 total claims. 2) The application must not contain any multiple dependent claims. 3) The petition must state the basis for seeking special status, i.e., the claimed invention either: A) materially enhances the quality of the environment or B) materially contributes to: i) the discovery or development of renewable energy resources, ii) the more efficient utilization and conservation of energy resources, or iii) greenhouse gas emission reduction. 4) If the disclosure is not clear on its face that the claimed invention materially contributes under category (A) or (B), the petition must be accompanied by a statement by the applicant, assignee, or an attorney/agent registered to practice before the Office explaining how the materiality standard is met. 5) A statement that applicant will agree to make an election without traverse in a telephonic interview if a restriction requirement is made by the examiner. 6) The petition to make special must be filed electronically. 7) The petition must be filed at least one day prior to the date that a first Office Action appears in the Patent Application Information Retrieval (PAIR) system. 8) The petition must be accompanied by a request for early publication in compliance with 37 CFR 1.219 and include the publication fee as set forth in 37 CFR 1.18(d).

The requirement for a fee for consideration of the petition to make special for applications pertaining to Green Technologies has been waived.

The instant petition complies with items 1 – 8 above. Accordingly, the above-identified application has been accorded "special" status.

Telephone inquires concerning this decision should be directed to Lee W. Young at 571-272-4549.

The application is being forwarded to the Technology Center Art Unit 2875 for action on the merits commensurate with this decision.

Lee W. Young
Quality Assurance Specialist
Technology Center 2800

**Doc Code: PPH.PCT.652**
**Document Description: Petition to make special under PCT-Patent Pros Hwy**

PTO/SB/20PCT-KR (06-10)
Approved for use through 01/31/2012. OMB 0651-0058
U.S. Patent and Trademark Office; U. S. DEPARTMENT OF COMMERCE
Under the Paperwork Reduction Act of 1995, no persons are required to respond to a collection of information unless it displays a valid OMB control number.

# REQUEST FOR PARTICIPATION IN THE PATENT COOPERATION TREATY - PATENT PROSECUTION HIGHWAY (PCT-PPH) PILOT PROGRAM BETWEEN THE KOREAN INTELLECTUAL PROPERTY OFFICE (KIPO) AND THE USPTO

| | | | |
|---|---|---|---|
| Application No: | 13/014744 | Filing date: | January 27, 2011 |
| First Named Inventor: | Thomas D. Ryan | | |
| Title of the Invention: | Curved Transpired Solar Air Heater and Conduit | | |

**THIS REQUEST FOR PARTICIPATION IN THE PCT-PPH PILOT PROGRAM ALONG WITH THE REQUIRED DOCUMENTS MUST BE SUBMITTED VIA EFS-WEB. INFORMATION REGARDING EFS-WEB IS AVAILABLE AT HTTP://WWW.USPTO.GOV/EBC/EFS_HELP.HTML**

**APPLICANT HEREBY REQUESTS PARTICIPATION IN THE PCT-PPH PROGRAM AND PETITIONS TO MAKE THE ABOVE-IDENTIFIED APPLICATION SPECIAL UNDER THE PCT-PPH PROGRAM.**

The above-identified application is (1) a national stage entry of the corresponding PCT application, or (2) a national stage entry of another PCT application which claims priority to the corresponding PCT application, or (3) a national application that claims domestic/ foreign priority to the corresponding PCT application, or (4) a national application which forms the basis for the priority claim in the corresponding PCT application, or (5) a continuing application of a U.S. application that satisfies one of (1) to (4) above, or (6) a U.S. application that claims domestic benefit to a U.S. provisional application which forms the basis for the priority claim in the corresponding PCT application.

**The corresponding PCT application number(s) is/are:** PCT/US2009/052158

**The international filing date of the corresponding PCT application(s) is/are:**
29 July 2009

**I. List of Required Documents:**

a. **A copy of the latest international work product (WO/ISA, WO/IPEA, or IPER) in the above–identified corresponding PCT application(s)**

☐ Is attached.

☑ Is not attached because the document is already in the U.S. application.

b. **A copy of all claims which were indicated as having novelty, inventive step and industrial applicability in the above-identified corresponding PCT application(s).**

☑ Is attached.

☐ Is not attached because the document is already in the U.S. application.

c. **English translations of the documents in a. and b. above are attached (if the documents are not in the English language). A statement that the English translation is accurate is attached for the document in b. above.**



This collection of information is required by 35 U.S.C. 119, 37 CFR 1.55, and 37 CFR 1.102(d). The information is required to obtain or retain a benefit by the public, which is to file (and by the USPTO to process) an application. Confidentiality is governed by 35 U.S.C. 122 and 37 CFR 1.11 and 1.14. This collection is estimated to take 2 hours to complete, including gathering, preparing, and submitting the completed application form to the USPTO. Time will vary depending upon the individual case. Any comments on the amount of time you require to complete this form and/or suggestions for reducing this burden should be sent to the Chief Information Officer, U.S. Patent and Trademark Office, U.S. Department of Commerce, P.O. Box 1450, Alexandria, VA 22313-1450. DO NOT SEND FEES OR COMPLETED FORMS TO THIS ADDRESS.

PTO/SB/20PCT-KR (06-10)
Approved for use through 01/31/2012. OMB 0651-0058
U.S.Patent and Trademark Office; U.S. DEPARTMENT OF COMMERCE
Under the Paperwork Reduction Act of 1995, no persons are required to respond to a collection of information unless it displays a valid OMB control number.

# REQUEST FOR PARTICIPATION IN THE PCT-PPH PILOT PROGRAM BETWEEN THE KIPO AND THE USPTO

(continued)

| | |
|---|---|
| Application No.: | 13/014744 |
| First Named Inventor: | Thomas D. Ryan |

d. **(1) An information disclosure statement listing the documents cited in the international work products (ISR, WO/ISA, WO/IPEA, IPER) of the corresponding PCT application.**

☐ Is attached

☑ Has already been filed in the above-identified U.S. application on 23 September 2011

**(2) Copies of all documents (except) for U.S. patents or U.S. patent application publications)**

☐ Are attached.

☑ Have already been filed in the above-identified U.S. application on 23 September 2011

**II. Claims Correspondence Table:**

| Claims in US Application | Patentable Claims in the corresponding PCT Application | Explanation regarding the correspondence |
|---|---|---|
| 1 | 1 | |
| 2 | 2 and 1 | "curved" in PCT replaced with "substantially convex" from claim 1 of PCT |
| 3 | 3 and 1 | "curved" in PCT replaced with "substantially convex" from claim 1 of PCT |
| 4 | 4 and 1 | "curved" in PCT replaced with "substantially convex" from claim 1 of PCT |
| 5 | 5 and 1 | "curved" in PCT replaced with "substantially convex" from claim 1 of PCT |
| 6-11 | 6-11 | same |
| 12-14 | 12-14 and 1 | "curved" in PCT replaced with "substantially convex" from claim 1 of PCT |
| 15-16 | 15-16 | same |
| 17 | 17 and 1 | "curved" in PCT replaced with "substantially convex" from claim 1 of PCT |
| 18 | 18 | same |
| 19 | 19 and 1 | "curved" in PCT replaced with "substantially convex" from claim 1 of PCT |
| 20 | 20 | same |
| 21 | 24 | claim 1 and claim 21 of the US have the limits of claim 24 of the PCT |
| 22 | 25 | same |
| 23-28 | 37-42 | Claim 1 and claim 23 of US have the limits of claim 37 of PCT |
| 29, 33 | 30, 34 | "curved" in PCT replaced with "substantially convex" from claim 1 of PCT |
| 30-31, 34 | 31-32, 35 | same |
| 32 | 33 | "or" in PCT replaced with "one from the group consisting of" and a to an |
| 35 | 36 and 32 | "curved" in PCT replaced with "substantially convex" from claim 1 of PCT |

**III. All the claims in the US application sufficiently correspond to the patentable claims in the corresponding PCT application.**

| | |
|---|---|
| Signature /James Marc Leas/ | Date November 24, 2011 |
| Name (Print/Typed) James Marc Leas | Registration Number 34372 |

# Privacy Act Statement

The **Privacy Act of 1974 (P.L. 93-579)** requires that you be given certain information in connection with your submission of the attached form related to a patent application or patent. Accordingly, pursuant to the requirements of the Act, please be advised that: (1) the general authority for the collection of this information is 35 U.S.C. 2(b)(2); (2) furnishing of the information solicited is voluntary; and (3) the principal purpose for which the information is used by the U.S. Patent and Trademark Office is to process and/or examine your submission related to a patent application or patent. If you do not furnish the requested information, the U.S. Patent and Trademark Office may not be able to process and/or examine your submission, which may result in termination of proceedings or abandonment of the application or expiration of the patent.

The information provided by you in this form will be subject to the following routine uses:

1. The information on this form will be treated confidentially to the extent allowed under the Freedom of Information Act (5 U.S.C. 552) and the Privacy Act (5 U.S.C 552a). Records from this system of records may be disclosed to the Department of Justice to determine whether disclosure of these records is required by the Freedom of Information Act.
2. A record from this system of records may be disclosed, as a routine use, in the course of presenting evidence to a court, magistrate, or administrative tribunal, including disclosures to opposing counsel in the course of settlement negotiations.
3. A record in this system of records may be disclosed, as a routine use, to a Member of Congress submitting a request involving an individual, to whom the record pertains, when the individual has requested assistance from the Member with respect to the subject matter of the record.
4. A record in this system of records may be disclosed, as a routine use, to a contractor of the Agency having need for the information in order to perform a contract. Recipients of information shall be required to comply with the requirements of the Privacy Act of 1974, as amended, pursuant to 5 U.S.C. 552a(m).
5. A record related to an International Application filed under the Patent Cooperation Treaty in this system of records may be disclosed, as a routine use, to the International Bureau of the World Intellectual Property Organization, pursuant to the Patent Cooperation Treaty.
6. A record in this system of records may be disclosed, as a routine use, to another federal agency for purposes of National Security review (35 U.S.C. 181) and for review pursuant to the Atomic Energy Act (42 U.S.C. 218(c)).
7. A record from this system of records may be disclosed, as a routine use, to the Administrator, General Services, or his/her designee, during an inspection of records conducted by GSA as part of that agency's responsibility to recommend improvements in records management practices and programs, under authority of 44 U.S.C. 2904 and 2906. Such disclosure shall be made in accordance with the GSA regulations governing inspection of records for this purpose, and any other relevant ( *i.e.*, GSA or Commerce) directive. Such disclosure shall not be used to make determinations about individuals.
8. A record from this system of records may be disclosed, as a routine use, to the public after either publication of the application pursuant to 35 U.S.C. 122(b) or issuance of a patent pursuant to 35 U.S.C. 151. Further, a record may be disclosed, subject to the limitations of 37 CFR 1.14, as a routine use, to the public if the record was filed in an application which became abandoned or in which the proceedings were terminated and which application is referenced by either a published application, an application open to public inspection or an issued patent.
9. A record from this system of records may be disclosed, as a routine use, to a Federal, State, or local law enforcement agency, if the USPTO becomes aware of a violation or potential violation of law or regulation.

UNITED STATES PATENT AND TRADEMARK OFFICE

Commissioner for Patents
United States Patent and Trademark Office
P.O. Box 1450
Alexandria, VA 22313-1450
www.uspto.gov

**JAMES MARC LEAS**
**LAW OFFICE OF JAMES MARC LEAS**
**37 BUTLER DRIVE**
**S. BURLINGTON VT 05403**

MAILED
FEB 13 2012
OFFICE OF PETITIONS

In re Application of
Thomas D. RYAN
Application No.: 13/014,744
Filed: January 27, 2011
Attorney Docket No.: 220-001-US
For: CURVED TRANSPIRED SOLAR AIR HEATER AND CONDUIT

: DECISION ON REQUEST TO
: PARTICIPATE IN THE PATENT
: PROSECUTION HIGHWAY
: PROGRAM AND PETITION
: TO MAKE SPECIAL UNDER
: 37 CFR 1.102(a)

This is a decision on the request to participate in the PCT Patent Prosecution Highway (PCT-PPH) pilot program and the petition under 37 CFR 1.102(a), filed on November 24, 2011, to make the above-identified application special.

The request and petition are **DISMISSED**.

**Discussion**

A grantable request to participate in the PCT-PPH pilot program and petition to make special require:

1) The U.S. application must have an eligible relationship to one or more PCT applications where the ISA or IPEA are Australia, Austria, China, EPO, Finland, JPO, Korea, Nordic Patent Institute, Russia, Spain, Sweden, or USPTO;

(2) At least one claim in the PCT application has novelty, inventive step, and industrial applicability and must be free of any observations in Box VIII in the latest work product in the international stage or applicant must identify and explain why the claim(s) is/are not subject to the observation in Box VIII;

(3) Applicant must submit a copy of the claim(s) from the PCT application(s) that have novelty, inventive step, and industrial applicability along with an English translation thereof and a statement that the English translation is accurate, if the claims are not in the English language;

(4) All the claims in the U.S. application must sufficiently correspond or be amended to sufficiently correspond to the claim(s) that have novelty, inventive step, and industrial applicability in the PCT application(s);

(5) Examination of the U.S. application has not begun;

(6) Applicant must submit a copy of the latest international work product from the PCT application indicating that the claim(s) have novelty, inventive step, and industrial applicability along with an English translation thereof.

(7) Applicant must submit an IDS listing the documents cited by the PCT examiner in the international work product along with copies of documents except U.S. patents or U.S. patent application publications.

(8) Applicant is required to submit a claims correspondence table in English which indicates how all the claims in the U.S. application correspond to the claims indicated as having novelty, inventive step and industrial applicability in the latest international work product.

**Requirements (1-3) and (5-8) above are considered to have been met. However, the request to participate in the PPH pilot program and petition fail to meet requirements (4).**

**Regarding the requirement of condition (4), the claims in the U.S. application do not sufficiently correspond to the claim(s) in the PCT application.**

Applicant is given **ONE** opportunity within a time period of **ONE MONTH or THIRTY DAYS**, whichever is longer, from the mailing date of this decision to correct the deficiencies. **NO EXTENSION OF TIME UNDER 37 CFR 1.136 IS PERMITTED.** If the deficiencies are not corrected with the time period given, the application will await action in its regular turn.

Response must be filed via the Electronic Filing System (EFS) using the document description: Petition to make special under PCT – Patent Pros Hwy. Any preliminary amendments and IDS submitted with the PPH documents must be separately indexed as a preliminary amendment and IDS, respectively.

Telephone inquiries concerning this decision should be directed to Michelle R. Eason at 571-272-4231.

All other inquiries concerning the examination or status of the application is accessible in the PAIR system at http://www.uspto.gov/ebc/index.html.

Thurman K. Page
Petitions Examiner
Office of Petitions

**Official Communication**
**PATENT**

In re the Application of: Thomas D. Ryan
Application No.: 13/014,744
Filing Date: January 27, 2011
Title: Curved Transpired Solar Air Heater and Conduit

Docket No. 220-001-US
Date: March 13, 2012
Examiner:

**Petition to Make Special Under PCT-Patent Prosecution Highway**
**Correction of Claims for PPH Request**
**Preliminary Amendment A**

Commissioner for Patents
PO Box 1450
Alexandria, VA 22313-1450

Sir:

This is in response to the Decision dismissing the Request to Participate in the Patent Prosecution Highway Program and Petition to Make Special under 37 CFR 1.102(a) dated February 13, 2012.

Applicant is canceling all claims and adding new claims exactly like those found allowable by the PCT (except for the necessity of modifying the claim numbers). Applicant is not including all of the claims found allowable by the PCT. Of the 42 claims found allowable by the PCT applicant is including only 35. Applicant asks that the decision to dismiss the request be reconsidered in view of submitting claims identical to those found allowable and that the petition to make special now be granted.

A fee for a fourth independent claim is due by virtue of this amendment.

UNITED STATES PATENT AND TRADEMARK OFFICE

Commissioner for Patents
United States Patent and Trademark Office
P.O. Box 1450
Alexandria, VA 22313-1450
www.uspto.gov

MAILED
MAR 21 2012
OFFICE OF PETITIONS

**JAMES MARC LEAS**
**LAW OFFICE OF JAMES MARC LEAS**
**37 BUTLER DRIVE**
**S. BURLINGTON VT 05403**

In re Application of
Thomas D. RYAN
Application No.: 13/014,744
Filed: January 27, 2011
Attorney Docket No.: 1035-1122
For: CURVED TRANSPIRED SOLAR AIR HEATER AND CONDUIT

: DECISION ON REQUEST TO
: PARTICIPATE IN THE PATENT
: PROSECUTION HIGHWAY
: PROGRAM AND PETITION
: TO MAKE SPECIAL UNDER
: 37 CFR 1.102(a)

This is a decision on the renewed request to participate in the PCT Patent Prosecution Highway (PCT-PPH) pilot program and the petition under 37 CFR 1.102(a), filed on March 13, 2012, to make the above-identified application special.

The request and petition are **GRANTED**.

**Discussion**

A grantable request to participate in the PCT-PPH pilot program and petition to make special require:

(1) The U.S. application must have an eligible relationship to one or more PCT applications where the ISA or IPEA are Australia, Austria, China, EPO, Finland, JPO, Korea, Nordic Patent Institute, Russia, Spain, Sweden, or USPTO;

(2) At least one claim in the PCT application has novelty, inventive step, and industrial applicability and must be free of any observations in Box VIII in the latest work product in the international stage or applicant must identify and explain why the claim(s) is/are not subject to the observation in Box VIII;

(3) Applicant must submit a copy of the claim(s) from the PCT application(s) that have novelty, inventive step, and industrial applicability along with an English translation thereof and statement that the English translation is accurate, if the claims are not in the English language;

(4) All the claims in the U.S. application must sufficiently correspond or be amended to sufficiently correspond to the claim(s) that have novelty, inventive step, and industrial applicability in the PCT application(s);

(5) Examination of the U.S. application has not begun;

(6) Applicant must submit a copy of the latest international work product from the PCT application indicating that the claim(s) have novelty, inventive step, and industrial applicability along with an English translation thereof and a statement that the English translation is accurate if the latest international work product is not in the English language;

(7) Applicant must submit an IDS listing the documents cited by the PCT examiner in the international work product along with copies of documents except U.S. patents or U.S. patent application publications.

The request to participate in the PCT-PPH pilot program and petition comply with the above requirements. Accordingly, the above-identified application has been accorded "special" status.

Telephone inquiries concerning this decision should be directed to Michelle R. Eason at 571-272-4231.

All other inquiries concerning the examination or status of the application is accessible in the PAIR system at http://www.uspto.gov/ebc.index.html.

This application will be forwarded to the examiner for action on the merits commensurate with this decision.

Thurman K. Page
Petitions Examiner
Office of Petitions

UNITED STATES PATENT AND TRADEMARK OFFICE

UNITED STATES DEPARTMENT OF COMMERCE
United States Patent and Trademark Office
Address: COMMISSIONER FOR PATENTS
P.O. Box 1450
Alexandria, Virginia 22313-1450
www.uspto.gov

| APPLICATION NO. | FILING DATE | FIRST NAMED INVENTOR | ATTORNEY DOCKET NO. | CONFIRMATION NO. |
|---|---|---|---|---|
| 13/014,758 | 01/27/2011 | Takashi Sato | 047260-5129 (461997) | 1318 |

55694 7590 11/15/2011

DRINKER BIDDLE & REATH (DC)
1500 K STREET, N.W.
SUITE 1100
WASHINGTON, DC 20005-1209

| EXAMINER | |
|---|---|
| ART UNIT | PAPER NUMBER |
| 3726 | |

| NOTIFICATION DATE | DELIVERY MODE |
|---|---|
| 11/15/2011 | ELECTRONIC |

**Please find below and/or attached an Office communication concerning this application or proceeding.**

The time period for reply, if any, is set in the attached communication.

Notice of the Office communication was sent electronically on above-indicated "Notification Date" to the following e-mail address(es):

DBRIPDocket@dbr.com
penelope.mongelluzzo@dbr.com

UNITED STATES PATENT AND TRADEMARK OFFICE

Commissioner for Patents
United States Patent and Trademark Office
P.O. Box 1450
Alexandria, VA 22313-1450
www.uspto.gov

DRINKER BIDDLE & REATH (DC)
1500 K STREET, N.W.
SUITE 1100
WASHINGTON DC 20005-1209

| | | |
|---|---|---|
| In re Application of | : | |
| SATO, TAKASHI et al | : | DECISION ON REQUEST TO |
| Application No. 13/014,758 | : | PARTICIPATE IN PATENT |
| Filed: Jan. 27, 2011 | : | PCT/PROSECUTION HIGHWAY |
| Attorney Docket No. 047260-5129 (461997) | : | PROGRAM AND PETITION |
| For: FITTING DEVICE USING ROBOT | : | TO MAKE SPECIAL |
| | : | 37 CFR 1.102(a) |

This is a decision on the request to participate in the Patent Prosecution Highway (PPH) program and the petition under 37 CFR 1.102(a), filed Nov. 7, 2011, to make the above-identified application special.

The request and petition are granted.

A grantable request to participate in the PPH pilot program and petition to make special require:

(1) The U.S. application must validly claim priority under 35 U.S.C. 119(a) to one or more applications filed in the JPO;
(2) Applicant must submit a copy of the allowable/patentable claim(s) from the JPO/PCT application(s) along with an English translation thereof and a statement that the English translation is accurate;
(3) All the claims in the U.S. application must sufficiently correspond or be amended to sufficiently correspond to the allowable/patentable claim(s) in the JPO application(s);
(4) Examination of the U.S. application has not begun;
(5) Applicant must submit a copy of all the office actions from each of the JPO/PCT application(s) containing the allowable/patentable claim(s) along with an English translation thereof and a statement that the English translation is accurate; and
(6) Applicant must submit an IDS listing the documents cited by the JPO examiner in the JPO office action along with copies of documents except U.S. patents or U.S. patent application publications.

The request to participate in the PPH program and petition met all conditions as stated. The request to participate in the PPH program is granted. Accordingly, the above-identified application has been accorded "special" status.

The applicant is encouraged to cite and submit all relevant prior art references, if any, to facilitate examination in this application.

Other inquiries concerning the examination or status of the application should be directed to David Bryant, the SPE of Art Unit 3726 at 571-272-4526 for Class 29/407 and also accessible in the PAIR system at http://www.uspto.gov/ebc.index.html.

All other inquiries concerning the examination or status of the application should be directed to the Patent Application Information Retrieval (PAIR) system.

This application will be forwarded and docketed to an examiner for action on the merits commensurate with this decision. Telephone inquiries concerning this decision should be directed to Henry C. Yuen, at 571-272-4856.

The petition is **granted.**

/Henry C. Yuen/

_____

Henry C. Yuen, Special Programs Examiner
Technology Center 3700 – Mechanical Engineering,
Manufacturing and Products
571-272-4856

UNITED STATES PATENT AND TRADEMARK OFFICE

Commissioner for Patents
United States Patent and Trademark Office
P.O. Box 1450
Alexandria, VA 22313-1450
www.uspto.gov

VOLENTINE & WHITT PLLC
ONE FREEDOM SQUARE
11951 FREEDOM DRIVE SUITE 1260
RESTON VA 20190

MAILED

MAR 04 2011

OFFICE OF PETITIONS

In re Application of :
Seo et al. :
Application No. 13/014,952 : ON PETITION
Deposited: 01/27/2011 :
Attorney Docket No. SEC.2004D :

This is in response to the communication filed on January 27, 2011, which includes a copy the petition under 37 CFR 1.47(a), filed on March 18, 2008, in prior-filed Application No. 11/865,738.

In accordance with 37 CFR 1.63(d)(3), applicants have submitted a copy of the executed declaration submitted in Application No. 11/865,738 of which the present filing is a divisional application. Furthermore, a copy of the decision mailed on May 5, 2008, granting the petition to accord Rule 1.47(a) status in prior-filed Application No. 11/865,738, has been placed in the file of the present application.

As Rule 1.47(a) status was granted in the prior application, this application is hereby accorded Rule 1.47(a) status.

As no petition is necessary to accord Rule 1.47(a) status in this application, the petition is **dismissed as moot.** No petition fee is necessary. Pursuant to 37 CFR 1.47(c), the Office is dispensing with the notice provision in the present application because notice was provided after the grant of Rule 1.47(a) status in the prior application.

This matter is being referred to the Office of Patent Application Processing.

Telephone inquiries related to this decision should be directed to the undersigned at (571) 272-3211.

Christina Tartera Donnell

Christina Tartera Donnell
Senior Petitions Attorney
Office of Petitions

UNITED STATES PATENT AND TRADEMARK OFFICE

Commissioner for Patents
United States Patent and Trademark Office
P.O. Box 1450
Alexandria, VA 22313-1450
www.uspto.gov

26868
HASSE & NESBITT LLC
8837 Chapel Square Drive
Suite C
Cincinnati, OH 45249

MAILED

NOV 02 2011

PCT LEGAL ADMINISTRATION

In re Application of :
GILLOT, Sandra :
U.S. Application No.: 13/014,955 :
Filing Date: January 27, 2011 : **DECISION**
Docket No.: HCL-042 :
For: CHIA-BASED FATTY ACIDS FOOD PRODUCT, RICH IN OMEGA-3, WITH GOOD STABILITY :

This decision is in response to applicant's petition under 37 CFR 1.137(b) filed September 14, 2011 which is hereby **GRANTED** as follows

The above-captioned application filed January 27, 2011 is a continuation of PCT/EP2009/001626, filed March 26, 2009 which claims priority to Chilean patent application No. CL 2157/2008, filed on July 27, 2008. Applicant provided an executed declaration on April 11, 2011 also listing the priority date as July 27, 2008.

In the subject petition, applicant states that the priority date of the foreign priority claim, CL 2157/2008 was misidentified in the international application. WIPO records show that the priority date of the foreign priority claim, CL 2157/2008 was listed as July 27, 2008 in the international publication and PCT Request. Applicant claims that the foreign priority application was actually filed on July 23, 2008. Applicant claims that the discrepancy was discovered after receiving a certified copy of the Chilean priority application. As a result, applicant filed the subject petition under 37 CFR 1.137(b) because the present application was not co-pending with PCT/EP2009/001626 during the initial filing on January 27, 2011.

International application PCT/EP2009/001626 is being revived for purposes of continuity only and since continuity has been established by this decision reviving the international application, the international application is again abandoned in favor of the present continuation application number 13/014,955.

Applicant is advised that a proper claim for foreign priority must be included in an oath or declaration, or an ADS. *See* MPEP § 201.14. Since a proper foreign priority claim is not present in the subject application within the time limit specified in 37 CFR 1.55(a)(1)(i), a petition under 37 CFR 1.55(c) is required to claim foreign priority to CL 2157/2008, filed July 23, 2008.

This application is being forwarded to the appropriate Art Unit for examination.

James Thomson
Attorney Advisor
Office of PCT Legal Administration

Tel.: (571) 272-3302

UNITED STATES PATENT AND TRADEMARK OFFICE

Commissioner for Patents
United States Patent and Trademark Office
P.O. Box 1450
Alexandria, VA 22313-1450
www.uspto.gov

Hasse & Nesbitt LLC
8837 Chapel Square Drive
Suite C
CINCINNATI OH 45249

MAILED
FEB 07 2012
OFFICE OF PETITIONS

In re Application of :
Gillot :
Application No. 13/014,955 : DECISION ON PETITION
Filed: January 27, 2011 : UNDER 37 CFR 1.55(c)
Attorney Docket No. HCL-042 :

This is a decision on the petition under 37 CFR 1.55(c), filed January 12, 2012, to accept an unintentionally delayed claim under 35 U.S.C. § 119(a)-(d) for the benefit of priority to Chilean Patent Application CL2157/2008, filed July 23, 2008.

The petition is **GRANTED**.

This pending nonprovisional application was filed after November 29, 2000, and did not include a reference to the foreign application, for which benefit is now sought, within the later of four months from the actual filing date of the application or sixteen months from the filing date of the prior foreign application. Since the claim for priority is submitted after the period specified in 37 CFR 1.55(a)(1)(i), this is an appropriate petition under the provisions of 37 CFR 1.55(c).

A petition under 37 CFR 1.55(c) to accept an unintentionally delayed claim for priority requires:

(1) The nonprovisional application claiming the benefit of an earlier filing date must be filed on or after November 29, 2000;

(2) the claim submitted with the petition must identify the prior foreign application for which priority is claimed, as well as any foreign application for the same subject matter and having a filing date before that of the application for which priority is claimed, by the application number, country, and the filing date and be included either in an oath or declaration (37 CFR 1.63(c)(2)) or in an Application Data Sheet (37 CFR 1.76(b)(6);

(3) the surcharge as set forth in 37 CFR 1.17(t);

(4) a statement that the entire delay between the date the claim was due under 37 CFR 1.55(a)(1) and the date the claim was filed was unintentional (the Director

may require additional information where there is a question whether the delay was unintentional); and

(5) a nonprovisional application in the benefit chain must be filed within 12 months of the filing date of the foreign application.

This application was filed on January 27, 2011, which is after November 29, 2000. This application is a continuation of PCT Application No. PCT/EP2009/001626, filed March 6, 2009. The PCT application was filed within 12 months of July 23, 2008 (the filing date of the foreign application to which benefit is now being claimed). On January 12, 2012, an executed declaration was received which identifies the foreign application for which priority is claimed by application number, country and filing date. The required petition fee of $1,410.00 was received with the petition. Lastly, petitioner has provided an adequate statement of unintentional delay.

All of the above requirements having been satisfied, the late claim for priority under 35 U.S.C. § 119(a)-(d) is accepted as being unintentionally delayed.

***The granting of the petition to accept the delayed benefit claim to the prior-filed application under 37 CFR 1.55(c) should not be construed as meaning that this application is entitled to the benefit of the prior-filed application. In order for this application to be entitled to the benefit of the prior-filed application, all other requirements under 35 U.S.C. § 119(a)-(d) and 37 CFR 1.55(a)(1) must be met. Similarly, the fact that the corrected Filing Receipt accompanying this decision on petition includes the prior-filed application should not be construed as meaning that applicant is entitled to the claim for benefit of priority to the prior-filed application noted thereon. Accordingly, the examiner will, in due course, consider this benefit claim and determine whether this application is entitled to the benefit of the earlier filing date.***

A corrected Filing Receipt, which includes the priority claim to the prior-filed foreign application, accompanies this decision on petition.

This application is being referred to Technology Center AU 1719 for consideration by the examiner of record of the foreign priority claim under 35 U.S.C. § 119(a)-(d).

Any inquiries directly pertaining to this matter may be directed to the undersigned at (571) 272-3230.

Shirene Willis Brantley
Senior Petitions Attorney
Office of Petitions

ATTACHMENT: Corrected Filing Receipt

UNITED STATES PATENT AND TRADEMARK OFFICE

UNITED STATES DEPARTMENT OF COMMERCE
United States Patent and Trademark Office
Address: COMMISSIONER FOR PATENTS
P.O. Box 1450
Alexandria, Virginia 22313-1450
www.uspto.gov

| APPLICATION NUMBER | FILING or 371(c) DATE | GRP ART UNIT | FIL FEE REC'D | ATTY.DOCKET.NO | TOT CLAIMS | IND CLAIMS |
|---|---|---|---|---|---|---|
| 13/014,955 | 01/27/2011 | 1781 | 527 | HCL-042 | 15 | 1 |

**CONFIRMATION NO. 1719**

**CORRECTED FILING RECEIPT**

26868
Hasse & Nesbitt LLC
8837 Chapel Square Drive
Suite C
CINCINNATI, OH 45249

*OC000000052436060*

Date Mailed: 02/06/2012

Receipt is acknowledged of this non-provisional patent application. The application will be taken up for examination in due course. Applicant will be notified as to the results of the examination. Any correspondence concerning the application must include the following identification information: the U.S. APPLICATION NUMBER, FILING DATE, NAME OF APPLICANT, and TITLE OF INVENTION. Fees transmitted by check or draft are subject to collection. Please verify the accuracy of the data presented on this receipt. **If an error is noted on this Filing Receipt, please submit a written request for a Filing Receipt Correction. Please provide a copy of this Filing Receipt with the changes noted thereon. If you received a "Notice to File Missing Parts" for this application, please submit any corrections to this Filing Receipt with your reply to the Notice. When the USPTO processes the reply to the Notice, the USPTO will generate another Filing Receipt incorporating the requested corrections**

**Applicant(s)**

Sandra GILLOT, Santiago, CHILE;

**Power of Attorney:** The patent practitioners associated with Customer Number 26868

**Domestic Priority data as claimed by applicant**

This application is a CON of PCT/EP2009/001626 03/06/2009

**Foreign Applications** (You may be eligible to benefit from the **Patent Prosecution Highway** program at the USPTO. Please see http://www.uspto.gov for more information.)
CHILE 2157-2008 07/23/2008

**If Required, Foreign Filing License Granted:** 02/09/2011

The country code and number of your priority application, to be used for filing abroad under the Paris Convention, is **US 13/014,955**

**Projected Publication Date:** Not Applicable

**Non-Publication Request:** No

**Early Publication Request:** No
**** SMALL ENTITY ****

**Title**

CHIA-BASED FATTY ACIDS FOOD PRODUCT, RICH IN OMEGA-3, WITH GOOD STABILITY

**Preliminary Class**

426

## PROTECTING YOUR INVENTION OUTSIDE THE UNITED STATES

Since the rights granted by a U.S. patent extend only throughout the territory of the United States and have no effect in a foreign country, an inventor who wishes patent protection in another country must apply for a patent in a specific country or in regional patent offices. Applicants may wish to consider the filing of an international application under the Patent Cooperation Treaty (PCT). An international (PCT) application generally has the same effect as a regular national patent application in each PCT-member country. The PCT process **simplifies** the filing of patent applications on the same invention in member countries, but **does not result** in a grant of "an international patent" and does not eliminate the need of applicants to file additional documents and fees in countries where patent protection is desired.

Almost every country has its own patent law, and a person desiring a patent in a particular country must make an application for patent in that country in accordance with its particular laws. Since the laws of many countries differ in various respects from the patent law of the United States, applicants are advised to seek guidance from specific foreign countries to ensure that patent rights are not lost prematurely.

Applicants also are advised that in the case of inventions made in the United States, the Director of the USPTO must issue a license before applicants can apply for a patent in a foreign country. The filing of a U.S. patent application serves as a request for a foreign filing license. The application's filing receipt contains further information and guidance as to the status of applicant's license for foreign filing.

Applicants may wish to consult the USPTO booklet, "General Information Concerning Patents" (specifically, the section entitled "Treaties and Foreign Patents") for more information on timeframes and deadlines for filing foreign patent applications. The guide is available either by contacting the USPTO Contact Center at 800-786-9199, or it can be viewed on the USPTO website at http://www.uspto.gov/web/offices/pac/doc/general/index.html.

For information on preventing theft of your intellectual property (patents, trademarks and copyrights), you may wish to consult the U.S. Government website, http://www.stopfakes.gov. Part of a Department of Commerce initiative, this website includes self-help "toolkits" giving innovators guidance on how to protect intellectual property in specific countries such as China, Korea and Mexico. For questions regarding patent enforcement issues, applicants may call the U.S. Government hotline at 1-866-999-HALT (1-866-999-4158).

## LICENSE FOR FOREIGN FILING UNDER

## Title 35, United States Code, Section 184

## Title 37, Code of Federal Regulations, 5.11 & 5.15

**GRANTED**

The applicant has been granted a license under 35 U.S.C. 184, if the phrase "IF REQUIRED, FOREIGN FILING LICENSE GRANTED" followed by a date appears on this form. Such licenses are issued in all applications where the conditions for issuance of a license have been met, regardless of whether or not a license may be required as

set forth in 37 CFR 5.15. The scope and limitations of this license are set forth in 37 CFR 5.15(a) unless an earlier license has been issued under 37 CFR 5.15(b). The license is subject to revocation upon written notification. The date indicated is the effective date of the license, unless an earlier license of similar scope has been granted under 37 CFR 5.13 or 5.14.

This license is to be retained by the licensee and may be used at any time on or after the effective date thereof unless it is revoked. This license is automatically transferred to any related applications(s) filed under 37 CFR 1.53(d). This license is not retroactive.

The grant of a license does not in any way lessen the responsibility of a licensee for the security of the subject matter as imposed by any Government contract or the provisions of existing laws relating to espionage and the national security or the export of technical data. Licensees should apprise themselves of current regulations especially with respect to certain countries, of other agencies, particularly the Office of Defense Trade Controls, Department of State (with respect to Arms, Munitions and Implements of War (22 CFR 121-128)); the Bureau of Industry and Security, Department of Commerce (15 CFR parts 730-774); the Office of Foreign AssetsControl, Department of Treasury (31 CFR Parts 500+) and the Department of Energy.

**NOT GRANTED**

No license under 35 U.S.C. 184 has been granted at this time, if the phrase "IF REQUIRED, FOREIGN FILING LICENSE GRANTED" DOES NOT appear on this form. Applicant may still petition for a license under 37 CFR 5.12, if a license is desired before the expiration of 6 months from the filing date of the application. If 6 months has lapsed from the filing date of this application and the licensee has not received any indication of a secrecy order under 35 U.S.C. 181, the licensee may foreign file the application pursuant to 37 CFR 5.15(b).

---


## *SelectUSA*

The United States represents the largest, most dynamic marketplace in the world and is an unparalleled location for business investment, innovation and commercialization of new technologies. The USA offers tremendous resources and advantages for those who invest and manufacture goods here. Through SelectUSA, our nation works to encourage, facilitate, and accelerate business investment. To learn more about why the USA is the best country in the world to develop technology, manufacture products, and grow your business, visit SelectUSA.gov.

UNITED STATES PATENT AND TRADEMARK OFFICE

Commissioner for Patents
United States Patent and Trademark Office
P.O. Box 1450
Alexandria, VA 22313-1450
www.uspto.gov

Decision Date : October 4,2011

In re Application of :

AMIR GABAI

DECISION ON PETITION

UNDER CFR 1.313(c)(2)

Application No : 13014970

Filed : 27-Jan-2011

Attorney Docket No : MP2254.C1

This is an electronic decision on the petition under 37 CFR 1.313(c)(2), filed October 4,2011 , to withdraw the above-identified application from issue after payment of the issue fee.

The petition is **GRANTED.**

The above-identified application is withdrawn from issue for consideration of a submission under 37 CFR 1.114 (request for continued examination). See 37 CFR 1.313(c)(2).

**Petitioner is advised that the issue fee paid in this application cannot be refunded. If, however, this application is again allowed, petitioner may request that it be applied towards the issue fee required by the new Notice of Allowance.**

Telephone inquiries concerning this decision should be directed to the Patent Electronic Business Center (EBC) at 866-217-9197.

This application file is being referred to Technology Center AU 2827 for processing of the request for continuing examination under 37 CFR 1.114 .

Office of Petitions

| Doc Code: PET.AUTO<br>Document Description: Petition automatically granted by EFS-Web | PTO/SB/140<br>U.S. Patent and Trademark Office<br>Department of Commerce |
|---|---|

| | |
|---|---|
| Electronic Petition Request | **PETITION TO WITHDRAW AN APPLICATION FROM ISSUE AFTER PAYMENT OF THE ISSUE FEE UNDER 37 CFR 1.313(c)** |
| Application Number | 13014970 |
| Filing Date | 27-Jan-2011 |
| First Named Inventor | AMIR GABAI |
| Art Unit | 2827 |
| Examiner Name | DAVID LAM |
| Attorney Docket Number | MP2254.C1 |
| Title | METHOD AND APPARATUS FOR CAM WITH REDUNDANCY |

An application may be withdrawn from issue for further action upon petition by the applicant. To request that the Office withdraw an application from issue, applicant must file a petition under this section including the fee set forth in § 1.17(h) and a showing of good and sufficient reasons why withdrawal of the application from issue is necessary.

APPLICANT HEREBY PETITIONS TO WITHDRAW THIS APPLICATION FROM ISSUE UNDER 37 CFR 1.313(c).

A grantable petition requires the following items:
(1) Petition fee; and
(2) One of the following reasons:
(a) Unpatentability of one or more claims, which must be accompanied by an unequivocal statement that one or more claims are unpatentable, an amendment to such claim or claims, and an explanation as to how the amendment causes such claim or claims to be patentable;
(b) Consideration of a request for continued examination in compliance with § 1.114 (for a utility or plant application only); or
(c) Express abandonment of the application. Such express abandonment may be in favor of a continuing application, but not a CPA under 37 CFR 1.53(d).

Petition Fee

☐ Applicant claims SMALL ENTITY status. See 37 CFR 1.27.

☐ Applicant is no longer claiming SMALL ENTITY status. See 37 CFR 1.27(g)(2).

☐ Applicant(s) status remains as SMALL ENTITY.

☒ Applicant(s) status remains as other than SMALL ENTITY

Reason for withdrawal from issue

| |
|---|
| ◯ One or more claims are unpatentable<br><br>◉ Consideration of a request for continued examination (RCE) (List of Required Documents and Fees)<br><br>◯ Applicant hereby expressly abandons the instant application (any attorney/agent signing for this reason must have power of attorney pursuant to 37 CFR 1.32(b)). |
| RCE request,submission, and fee.<br><br>☐ I certify, in accordance with 37 CFR 1.4(d)(4) that :<br>The RCE request ,submission, and fee have already been filed in the above-identified application on<br><br>☒ Are attached. |
| THIS PORTION MUST BE COMPLETED BY THE SIGNATORY OR SIGNATORIES<br><br>I certify, in accordance with 37 CFR 1.4(d)(4) that I am:<br><br>◉ An attorney or agent registered to practice before the Patent and Trademark Office who has been given power of attorney in this application.<br><br>◯ An attorney or agent registered to practice before the Patent and Trademark Office, acting in a representative capacity.<br><br>◯ A sole inventor<br><br>◯ A joint inventor; I certify that I am authorized to sign this submission on behalf of all of the inventors<br><br>◯ A joint inventor; all of whom are signing this e-petition<br><br>◯ The assignee of record of the entire interest that has properly made itself of record pursuant to 37 CFR 3.71 |

| | |
|---|---|
| Signature | /John S. Kern/ |
| Name | John S. Kern |
| Registration Number | 42719 |

UNITED STATES PATENT AND TRADEMARK OFFICE

Commissioner for Patents
United States Patent and Trademark Office
P.O. Box 1450
Alexandria, VA 22313-1450
www.uspto.gov

**OBLON, SPIVAK, MCCLELLAND MAIER & NEUSTADT, L.L.P.**
**1940 DUKE STREET**
**ALEXANDRIA VA 22314**

MAILED
NOV 25 2011
OFFICE OF PETITIONS

Applicant: Zheng-Yun James Zhan
Appl. No.: 13/014,993
Filing Date: January 27, 2011
Title: POLYHETEROCYCLIC COMPOUNDS HIGHLY POTENT AS HCV INHIBITORS
Attorney Docket: 374829 US
Pub. No.: US 20110183895 A1
Pub. Date: July 28, 2011

This is a decision on the request for a corrected patent application publication under 37 CFR 1.221(b), received on September 28, 2011, for the above-identified application.

The request is DISMISSED.

Applicant requests that the application be republished because the patent application publication contains errors in the examples in the description of the specification.

37 CFR 1.221 (b) is applicable "only when the Office makes a material mistake which is apparent from Office records.... Any request for a corrected publication or revised patent application publication other than provided as provided in paragraph (a) of this section must be filed within two months from the date of the patent application publication. This period is not extendable." A material mistake must affect the public's ability to appreciate the technical disclosure of the patent application publication, to determine the scope of the patent application publication, or to determine the scope of the provisional rights that an applicant may seek to enforce upon issuance of a patent. [1]

The errors noted by requestor in the description of the specification may be Office mistakes, but are not material Office errors under 37 CFR 1.221(b). The errors do not affect the public's ability to appreciate the technical disclosure of the patent application publication, or determine the scope of the patent application publication or determine the scope of the provisional rights that an applicant may seek to enforce upon issuance of a patent. See MPEP 1130B.

The applicant is advised that a "request for republication of an application previously published" may be filed under 37 CFR 1.221 (a). Such a request for republication "must include a copy of the application compliance with the Office's electronic filing system requirements and be

[1] Changes to Implement Eighteen-Month Publication of Patent Applications, 65 FR 57023, 57038 (Sept. 20, 2000), 1239, Off. Gaz. Pat. Office Notices 63, 75 (Oct. 10, 2000) (final rule).

accompanied by the publication fee set forth in § 1.18 (d) and the processing fee set forth in § 1.17 (i)." If the request for republication does not comply with the electronic filing system requirements, the republication will not take place and the publication fee set forth in § 1.18 (d) will be refunded. The processing fee will be retained.

A guide for filing a request for a Pre-Grant Publication, such as a request for republication, may be found on the link below:

http://www.uspto.gov/patents/process/file/efs/guidance/index.jsp

http://www.uspto.gov/ebc/portal/efs/pgpub_quickstart.pdf

Any request for republication under 37 CFR 1.221(a), must be submitted via the EFS system, as a "Pre-Grant Publication".

Inquiries relating to this matter may be directed to Karen Creasy at (571) 272-3208.

/Christopher Bottorff/

Christopher Bottorff
Petitions Examiner
Office of Petitions